Title **SERVICE HINTS FOR REFRIGERANT LEAK DETECTION**

Use of electronic leak detectors for checking A/C systems refrigerant leakage is the only method approved by TMS. This type of leak detector is sensitive not only to refrigerant, but also sensitive to numerous petrochemical substances (motor oil, gasoline, solvents, etc.) commonly found in a repair shop environment. Because this sensitivity could diminish the leak detector's capacity for accurate leak detection, some service hints have been provided to help increase the accuracy of your diagnosis.

SERVICE HINTS:

1. **Visual Inspection:** Do a quick visual inspection under the hood for signs of refrigerant leakage. Check for areas of heavy oil leakage at block and piping joints. Many times these areas have accumulated road dust and dirt.

2. **Inspection with leak detector:** **NOTE:** Make sure the system is fully charged. Operate the system to increase refrigerant pressure. Shut the system off before inspecting with leak detector.

   A. Checking for leakage at a joint: Wipe the oil/dirt accumulation off the joint with a clean rag. Do not use solvents to clean the joint. Refrigerant is heavier than air so start checking for leaks with the detector wand about 1/4 in. below the joint. Move the wand slowly across and around each joint (see illustration below).

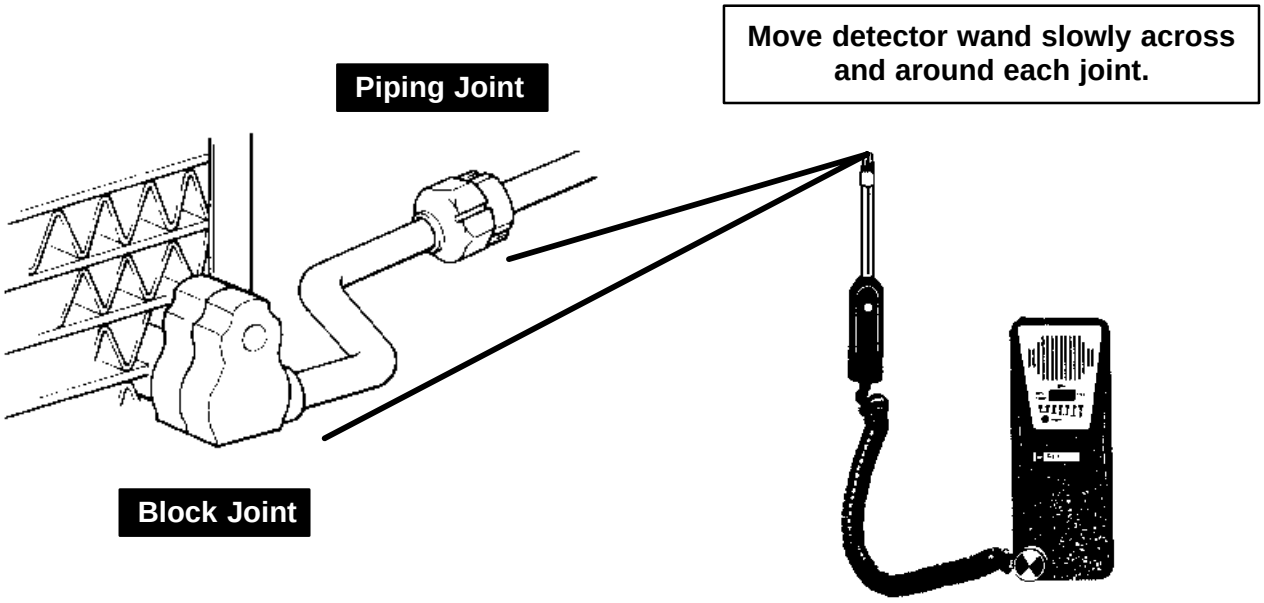

B. Checking for leakage at the evaporator: The evaporator drain hose provides an excellent access point to check for refrigerant leakage from the evaporator. Be sure to raise the vehicle on a lift so that the evaporator is as far as possible from any petrochemical source that may be on the shop floor. When leak checking in this area, turn the system off, pinch off the evaporator drain hose, and wait 10 to 15 minutes to allow the refrigerant to accumulate in the evaporator case. When the system is ready to check, release the drain hose and hold the leak detector wand about 1/4 inch below the drain opening (see diagram).

NOTE: Do not allow the leak detector tip to come in contact with water from the evaporator.

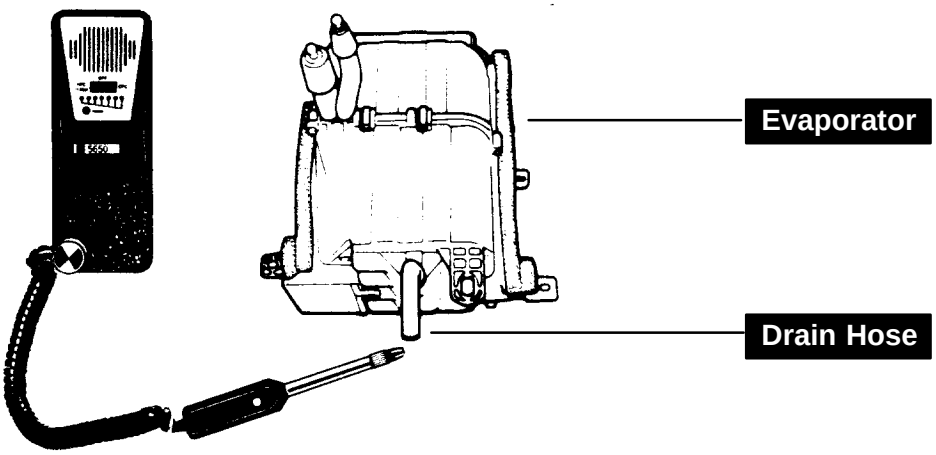

C. Checking for leakage at front compressor seal: Front compressor seal leaks are probably the most difficult leaks to detect accurately. Special diagnostic procedures must be followed for the best success. Make sure the system is fully charged. Operate the system with a pressure gauge installed and assure that the system has correct system pressures. **Shut off the engine.** Begin the leak check by placing the detector probe along the bottom half of the compressor clutch. Move the wand slowly across the bottom of the compressor clutch. Be careful not to expose the detector wand tip to any oil residue as this may cause a false leakage reading.

Verify correct system pressure.

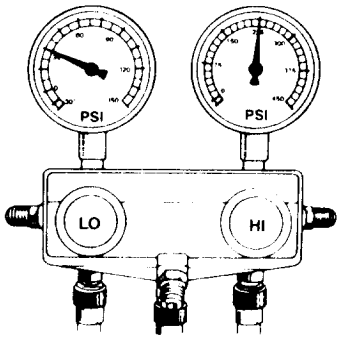

Move dectector wand slowly across the bottom half of the compressor clutch.

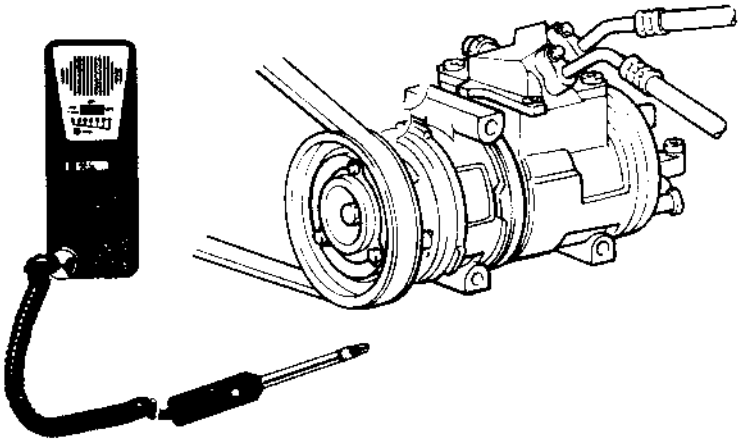

D. Checking for leakage at service valves or pressure switches:
Small accumulations of refrigerant gas under the service valve caps or pressure switch connectors is normal. When checking for leaks at these points, use the following procedures to assure the highest accuracy:

1. Remove the service valve cap or pressure switch connector.

2. Allow the service valve or pressure switch to remain uncapped for approximately 20 minutes. This will allow the air to circulate and carry away the accumulated refrigerant. (This is a good time to leak check other areas of the system).

3. Do not use compressed air to flush out the service valve or pressure switch cavity. Petroleum residue from inline oilers or compressor lubrication may cause false readings.

Title:

AIR CONDITIONING EVAPORATOR ODOR

Models:

’92–96 ES 300, ’93–’94 LS 400, All GS 300, SC 300/400, LX 450.

Introduction

A musty odor may be emitted from the air conditioning system of some vehicles which are usually operated in areas with high temperature and humidity. It is most noticeable when the air conditioner is first turned “ON” after the vehicle has been parked for several hours. The odor could result from one or more of the following conditions:

1. Blockage of the evaporator housing drain pipe, resulting in the build up of condensation.

2. Microbial growth in the evaporator, arising from dampness in the evaporator housing where the cooling air flow is dehumidified.

To address excessive air conditioning evaporator odor, check the evaporator housing drain pipe for blockage. If no problems are found, the evaporator and housing should be cleaned and disinfected using the general procedure given on page 2, and the model specific procedure on the pages indicated in the Table of Contents at the bottom of this page.

Affected Vehicles

- While this procedure may be used on any Lexus vehicle, this bulletin gives details specifically for the **’92–’96 ES 300, all GS 300, ’93–’94 LS 400, all SC 300/400 and the LX 450.**

Tools & Materials

PART NUMBER	DESCRIPTION OF TOOLS & MATERIALS	QUANTITY	SOURCE
08821–00810–01	Spray Gun Kit	1	OTC
08821–00811–01	Spray Gun (replacement)	(1)	OTC
08821–00812–01	Spray Gun Nozzle (replacement)	(1)	OTC
08821–00813–01	Freshener Mixing Container (replacement)	(1)	OTC
08821–00801–DS	Air Conditioning Freshener	1 per vehicle	TMS

CAUTION:
Wear safety glasses, protective mask, and gloves while working with the freshener.

Warranty Information

OPCODE	DESCRIPTION	TIME	OPN	T1	T2
N/A	No applicable warranty information	–	–	–	–

Table of Contents

MODEL	PAGE	MODEL	PAGE	MODEL	PAGE	MODEL	PAGE
GENERAL	2	ES 300	3	GS 300	5	LS 400	7
		SC 300	9	SC 400	9	LX 450	11
General Procedure applies to all models and model years. The Specific Model Sections cover only the listed “affected models.”							

General Procedure

1. Preparation of freshener solution:

   (a) Invert freshener container and shake vigorously for 30 seconds.
   (b) Mix 3.4 fl. oz. of freshener (1 container) with 30 fl. oz. to make 1 qt. of solution.

2. Drying the evaporator:
   - Dry the evaporator for 10 minutes with the following settings:
     A/C: . . . . . Off
     Air Outlet: . . . . . Foot
     Mode: . . . . . Recirc.
     Blower: . . . . . High
     Temp: . . . . . Max Warm

3. Evaporator Treatment Preparation:

   (a) Ensure availability of 30–45 psi compressed air to be used with spray gun for application of freshener.
   (b) Place a tray under the evaporator housing drain hose to collect used cleaning solution.
   (c) Place shop cloth under the evaporator housing in the vehicle to prevent cleaning solution from dripping onto the floor mat.

4. Vehicle Preparation: **See specific model section.**

5. Evaporator treatment:

   (a) Set HVAC mode as follows:
   A/C: . . . . . Off
   Air Outlet: . . . . . Face
   Mode: . . . . . Fresh
   Blower: . . . . . High
   Temp: . . . . . Max Warm
   Windows: . . . . . Open
   (b) Insert spray nozzle into the filter inlet and spray the entire quantity (1 qt.) of freshener solution into the evaporator while moving the nozzle around to cover the complete evaporator surface.
   (c) Turn the blower OFF.

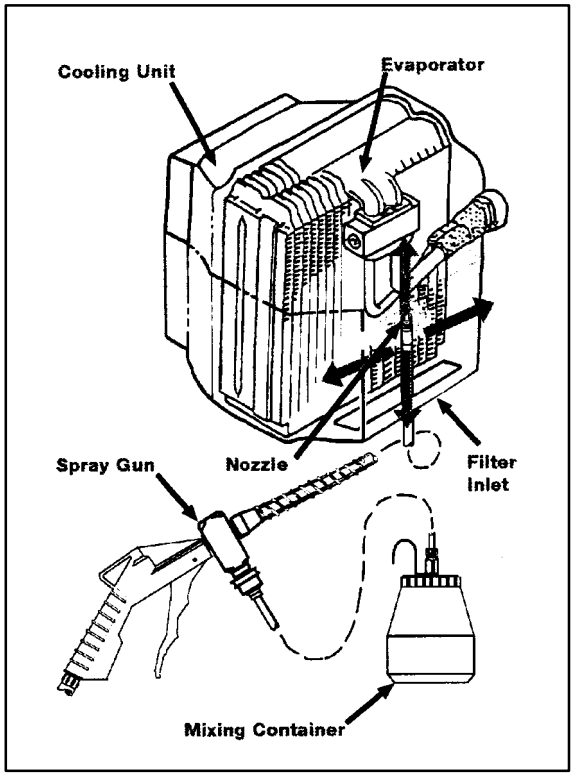

6. Reinstallation of Parts.

7. Completion of Treatment.

   (a) Dry the evaporator for 30 minutes with the following settings:
   A/C: . . . . . Off
   Air Outlet: . . . . . Foot
   Mode: . . . . . Recirc.
   Blower: . . . . . High
   Temp: . . . . . Max Warm
   Windows: . . . . . Closed
   (b) If the vehicle still has alcohol smell, open windows for ventilation. Do not turn on the AC switch until the evaporator is completely dry as this can reduce the effectiveness of the solution.

CAUTION
Do not get into the vehicle during this drying operation.

ES 300 ('92–'96)

1. Removal of parts.

   (a) Pull down the carpet from the center console as indicated by red arrow in the illustration.

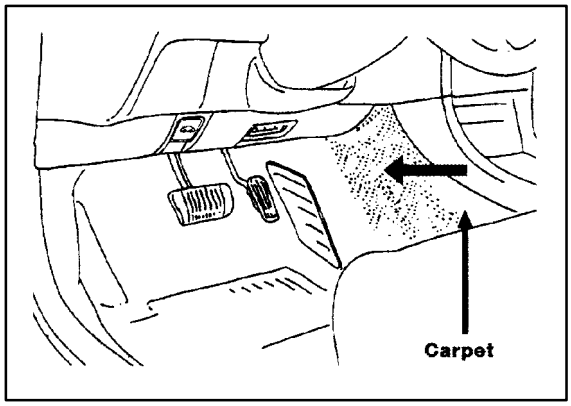

   (b) Remove the plate on the side of the heater unit using steps ① and ②, indicated with red arrows to show direction, in the illustration.

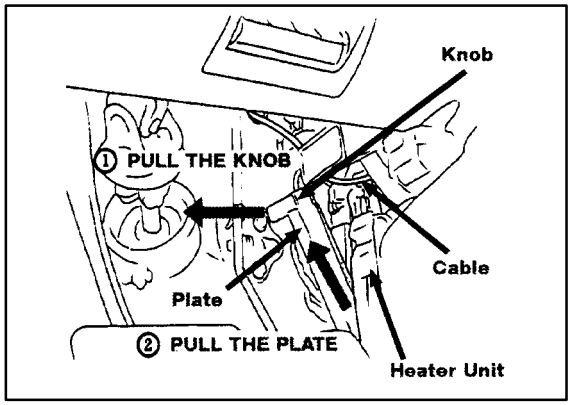

CAUTION:
Do not bend the cable.

NOTE:
The Plate will be reused.

   (c) Remove the filter.

   (d) Remove the blower controller.

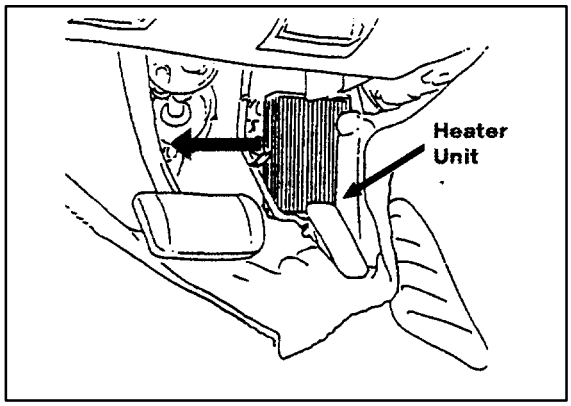

2. Clean the Evaporator.

   - Follow the general procedures given on page 2.

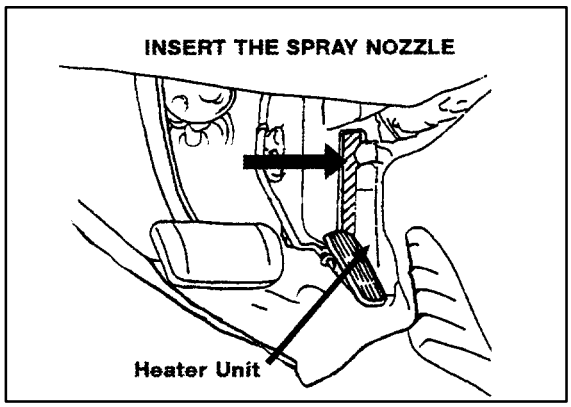

NOTE:
Location for insertion of spray nozzle is indicated by the red arrow in the illustration.

ES 300 ('92–'96) (Continued)

3. Reinstallation of parts.

(a) Insert the filter (up side) into the heater unit following the numbered steps shown in the illustration.

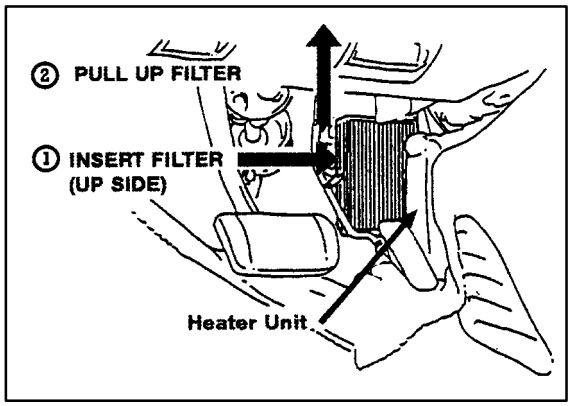

(b) Insert the filter (down side) into the heater unit.

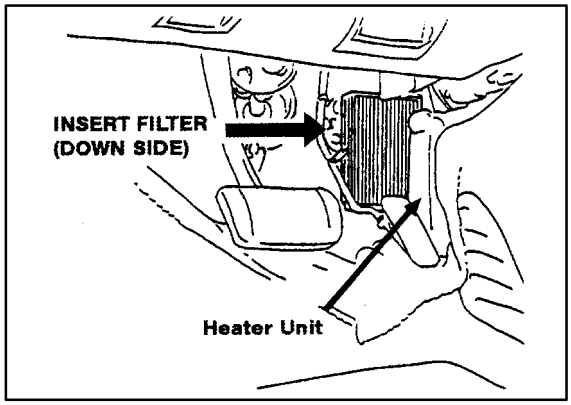

(c) Reinstall the plate on the side of the heater unit using steps ① and ②, indicated with **red** arrows to show direction, in the illustration.

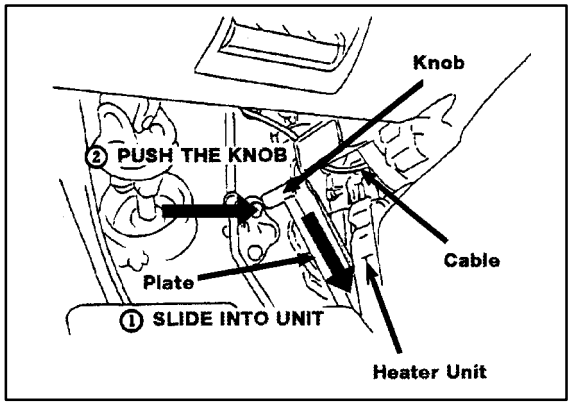

> **CAUTION:**
> **Confirm that the plate is secure.**

(d) Restore the carpet to its original position taking care not to bend the cable.

GS 300 1. Removal of parts.

(a) Remove the undercover.

> **NOTE:**
> **Pull down the clip areas (3 places) of the Undercover to remove.**

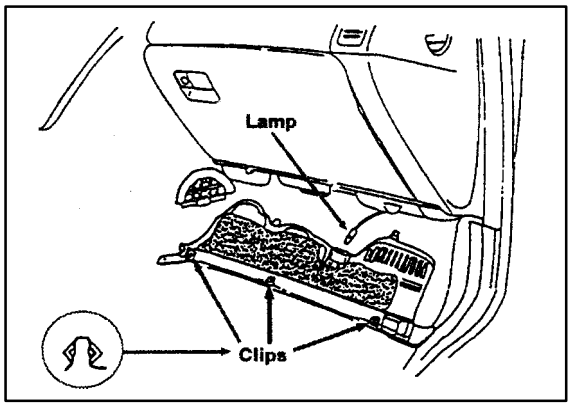

(b) Remove the lamp.

(c) Remove the (2) wing nuts and the plate on the bottom of the cooling unit.

> **CAUTION:**
> **The plate and wing nuts will be reused.**

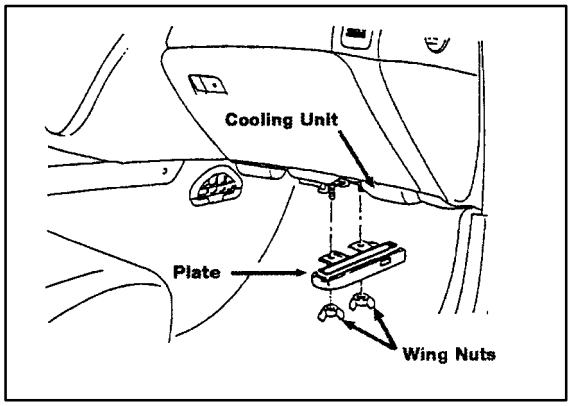

(d) Remove the (2) filters from the cooling unit.

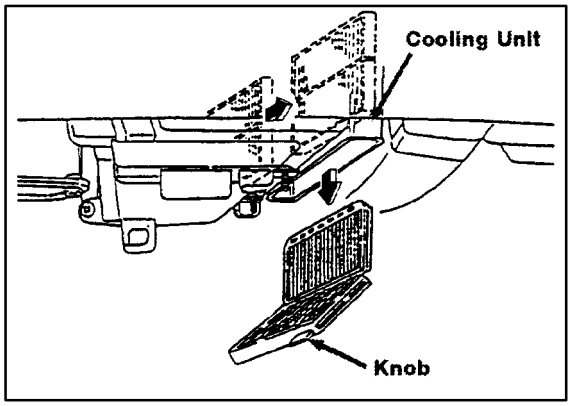

2. Clean the Evaporator.

- Follow the general procedures given on page 2.

> **NOTE:**
> **Location for insertion of spray nozzle is indicated by the red arrow in the illustration.**

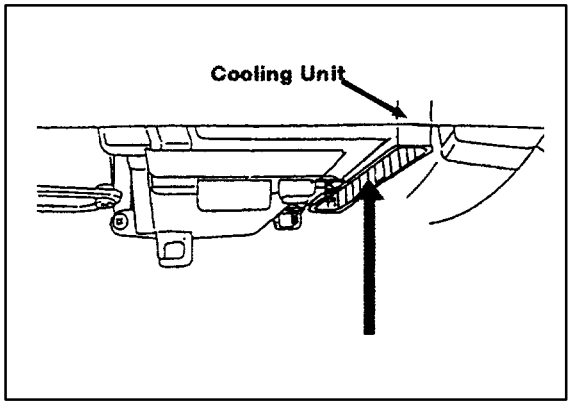

GS 300 (Continued)

3. Reinstallation of parts.

(a) Insert the (2) filters into the cooling unit as shown in the illustration.

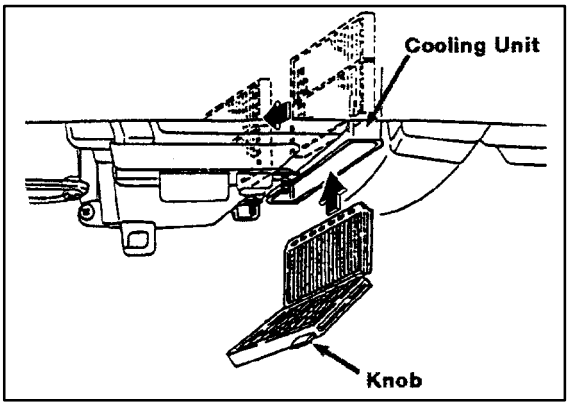

NOTE:
Insert a clean air filter with it's knob facing downwards, then slide it forward and install the second filter in the same manner.

(b) Assemble the rubber insulator on the plate.

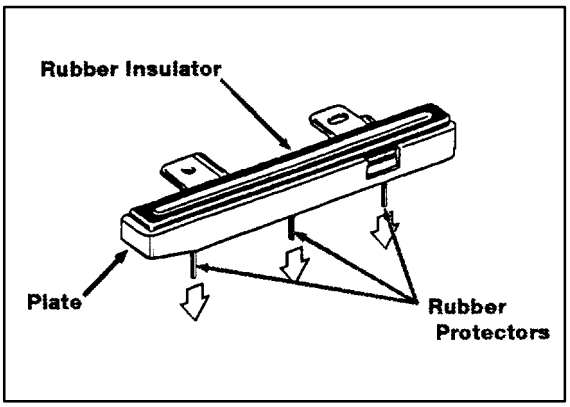

CAUTION:
To prevent the cooling unit from leaking water, pull the three rubber projections from the other side of the plate to make sure that the rubber insulator seals properly against the plate.

(c) Install the plate on the cooling unit and secure with the (2) wing nuts.

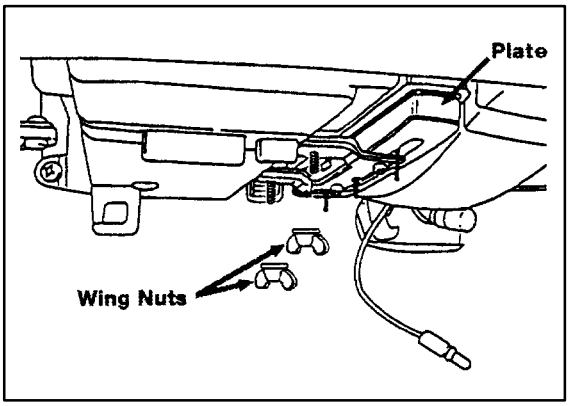

CAUTION:
To prevent water leaks, verify that the cooling unit and plate are fully secure before tightening the wing nuts.

NOTE:
Before installing the plate on the cooling unit, coat the rubber insulator with water for easier assembly.

(d) Reinstall the lamp.

(e) Reassemble the Undercover.

LS 400 ('93–'94)

1. Removal of parts.

   (a) Remove the undercover.

> **NOTE:**
> - **Remove the front of "A" clips.**
> - **Pull down the three "B" clip areas of the Undercover to remove.**

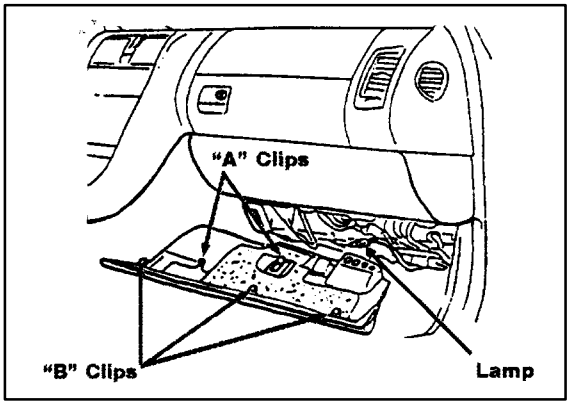

   (b) Remove the lamp.

   (c) Remove the (2) wing nuts and the plate on the bottom of the cooling unit.

> **CAUTION:**
> **The plate and wing nuts will be reused.**

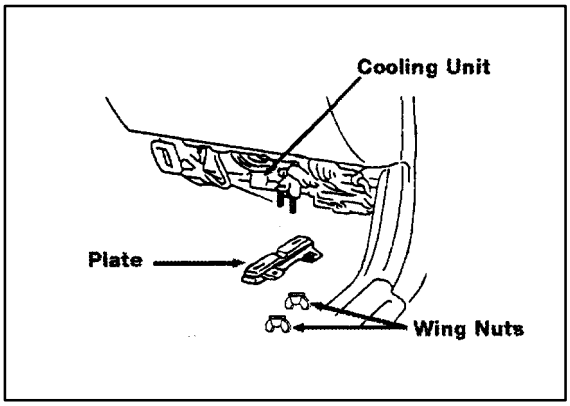

   (d) Remove the (2) filters from the cooling unit.

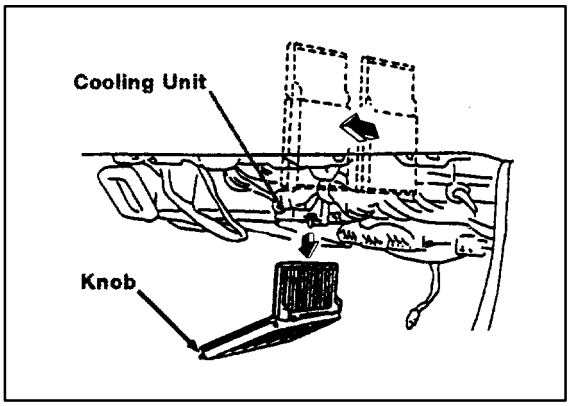

2. Clean the Evaporator

   - Follow the general procedures given on page 2.

> **NOTE:**
> **Location for the insertion of spray nozzle is indicated by the red arrow in the illustration.**

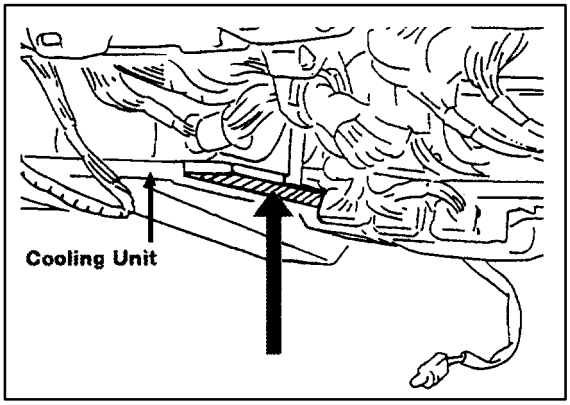

LS 400 ('93–'94) (Continued)

3. Reinstallation of parts.

(a) Insert the (2) filters into the cooling unit as shown in the illustration.

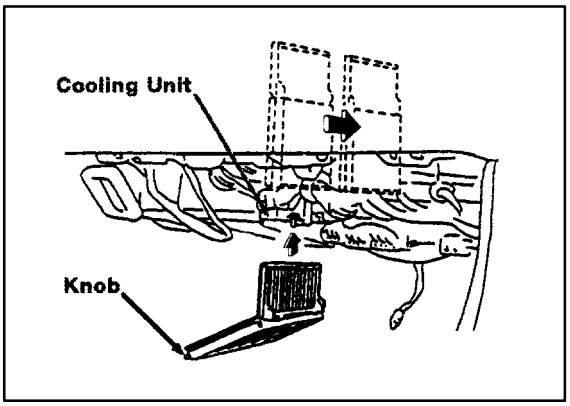

NOTE:
Insert a clean air filter with it's knob facing downwards, then slide it forward and install the second filter in the same manner.

(b) Assemble the rubber insulator on the plate.

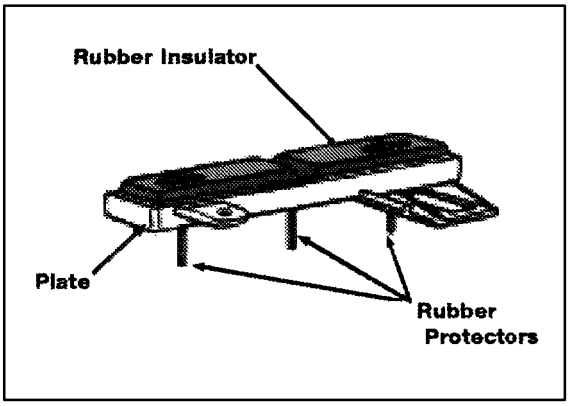

CAUTION:
To prevent the cooling unit from leaking water, pull the three rubber projections from the other side of the plate to make sure that the rubber insulator seals properly against the plate.

(c) Install the plate on the cooling unit and secure with the (2) wing nuts.

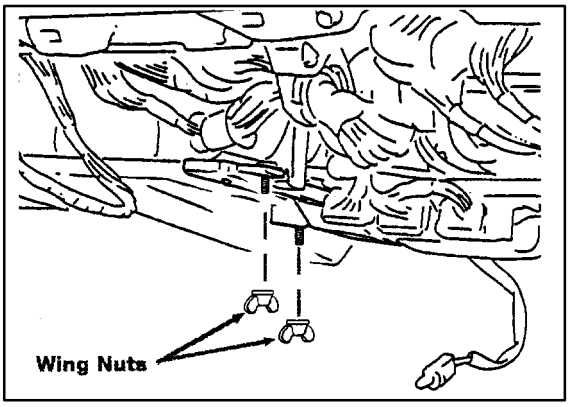

CAUTION:
To prevent water leaks, verify that the cooling unit and plate are fully secure before tightening the wing nuts.

NOTE:
Before installing the plate on the cooling unit, coat the rubber insulator with water for easier assembly.

(d) Reinstall the lamp.

(e) Reassemble the Undercover.

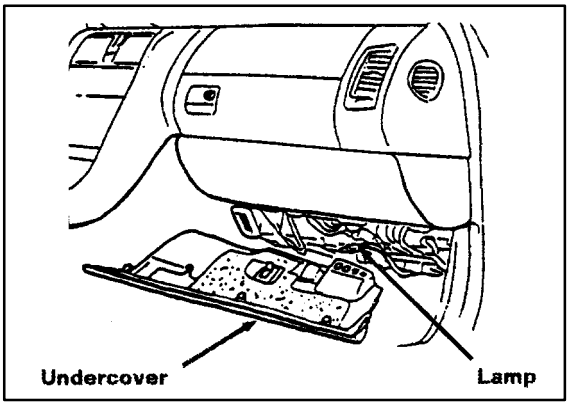

SC 300
SC 400

1. Removal of parts.

   (a) Remove two clips using the clip remover then remove the undercover.

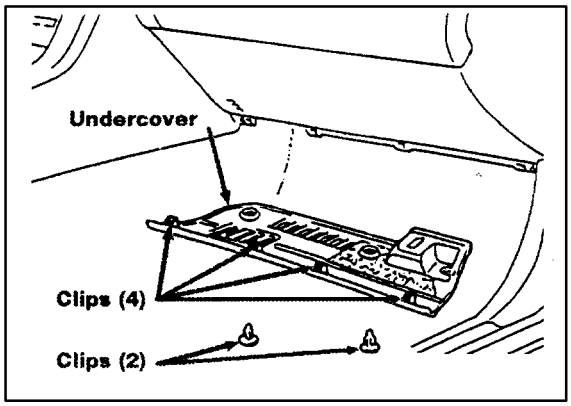

> **NOTE:**
> **Pull down the clip areas (4 places) of the Undercover to remove.**

   (b) Remove the (2) wing nuts and the plate on the bottom of the cooling unit.

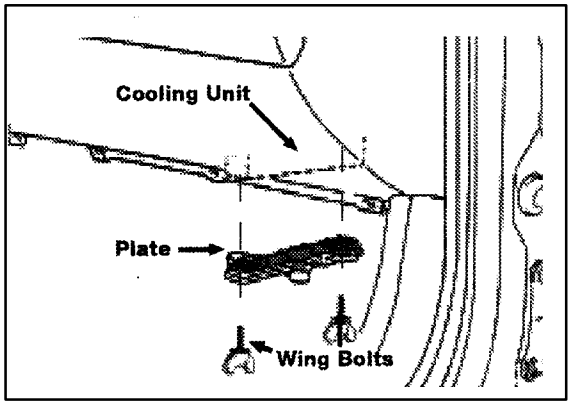

> **CAUTION:**
> **The plate and wing nuts will be reused.**

   (c) Remove the (2) filters from the cooling unit.

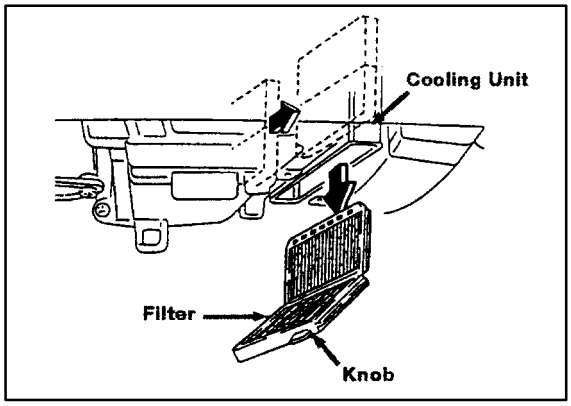

2. Clean the Evaporator

   - Follow the general procedures given on page 2.

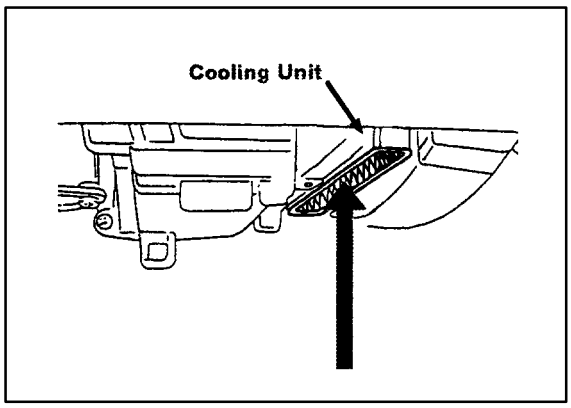

> **NOTE:**
> **Location for the insertion of spray nozzle is indicated by the red arrow in the illustration.**

SC 300
SC 400
(Continued)

3. Reinstallation of parts.

(a) Insert the (2) filters into the cooling unit as shown in the illustration.

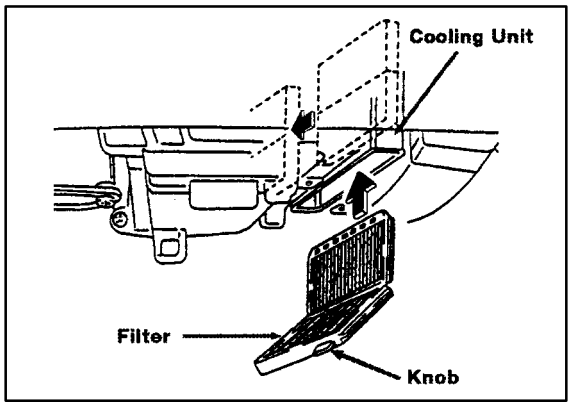

NOTE:
Insert a clean air filter with it's knob facing downwards, then slide it forward and install the second filter in the same manner.

(b) Assemble the rubber insulator on the plate.

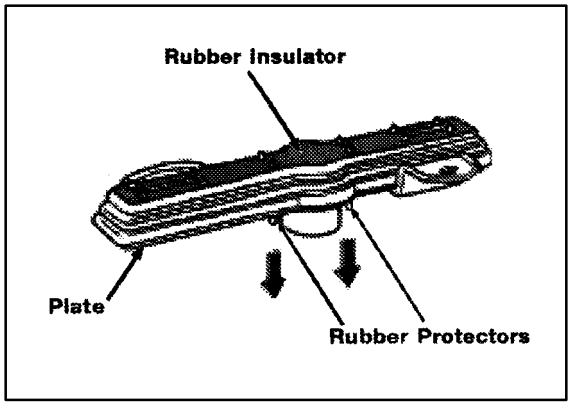

CAUTION:
To prevent the cooling unit from leaking water, pull the three rubber projections from the other side of the plate to make sure that the rubber insulator seals properly against the plate.

(c) Install the plate on the cooling unit and secure with the (2) wing nuts.

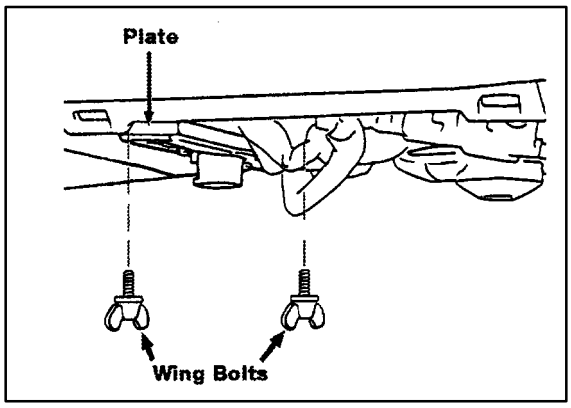

CAUTION:
To prevent water leaks, verify that the cooling unit and plate are fully secure before tightening the wing nuts.

NOTE:
Before installing the plate on the cooling unit, coat the rubber insulator with water for easier assembly.

(d) Reassemble the Undercover.

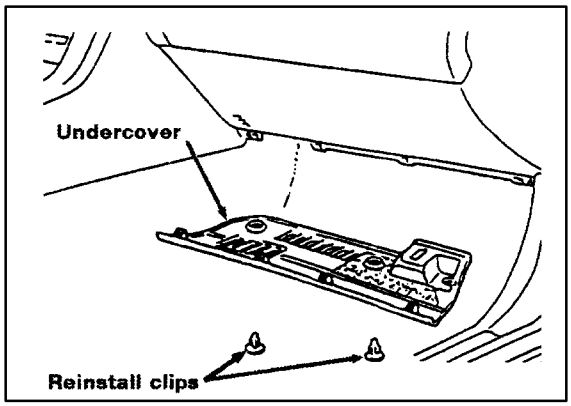

LX 450 1. Removal of parts.

(a) Remove the glove compartment door.
(b) Remove the A/C Amplifier.
(c) Remove power transistor.

2. Clean the Evaporator

- Follow the general procedures given on page 2.

3. Reinstallation of parts.

- Reinstall the parts in reverse order of removal described in step 1.

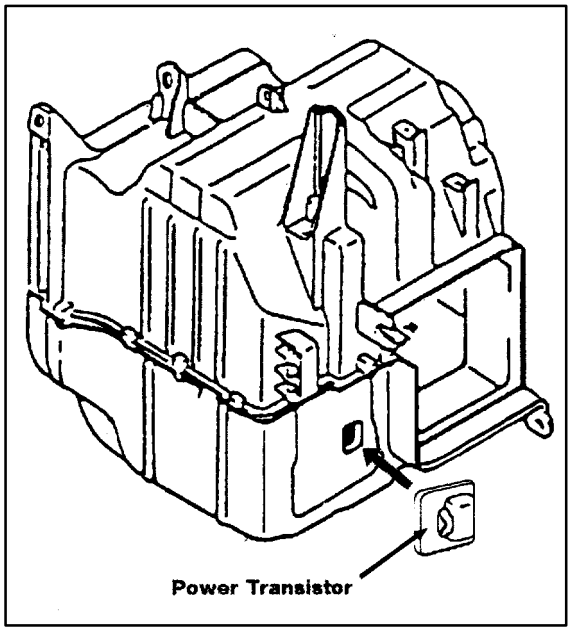

LEXUS

TECHNICAL SERVICE INFORMATION

REF: HEATING & AIR CONDITIONING

NO: AC003-96

DATE: JUNE 7, 1996

MODEL: ALL MODELS

Title **A/C COMPRESSOR MAINTENANCE FOR STORED VEHICLES**

When a vehicle is stored for a long period, the volume of oil in the A/C compressor may decrease due to oil flow into the condenser, pipes, etc.

If the A/C system is turned on at high engine RPM after a long storage period, A/C compressor damage may result.

To minimize the possibility of damage to the A/C compressor while storing a vehicle, perform the following recommended procedure at least once a month to lubricate the compressor.

RECOMMENDED PROCEDURE FOR A/C COMPRESSOR LUBRICATION:

1. Turn off A/C And blower switches prior to starting engine.
2. Start and warm–up engine until engine speed drops below 1,000 RPM.
3. Turn on the A/C system using the following settings:
   - A/C switch: On
   - Blower Speed: High
   - Engine speed: Below 1,000 RPM
4. Keep A/C on with engine idling for 30 seconds.
5. Turn off A/C system and stop engine.

Title **STATIC NOISE ON WEAK AM STATIONS**

Some Lexus audio systems may exhibit audible electrical noise on weak AM stations when various electrical accesssories (turn signals, rear defogger, cruise control, brakes, etc.) are operated.

Poor antenna grounding can cause this condition.

To eliminate or reduce the intensity of the noise use the following repair procedure:

REPAIR PROCEDURE:

1. Play the radio on a strong, static–free AM station and slowly move the tip of the antenna mast forward and back approximately 2 inches (Fig. 1). If static noise is not heard, go to Step 2. If static noise is heard during antenna movement, replace the antenna mast and go to Step 3.

NOTE: Do not touch the antenna mast with your bare hands. Use a glove or non-metallic object to move the antenna. (If you touch the antenna with your hands, you will change the antenna sensitivity).

2. Remove the antenna mast and inspect the base of the mast for corrosion and damage. Clean with 1500 grit sandpaper (Fig. 2).

3. Remove the antenna assembly and inspect the inner fender around the antenna hole for corrosion. Clean with 1500 grit sandpaper (Fig. 3).

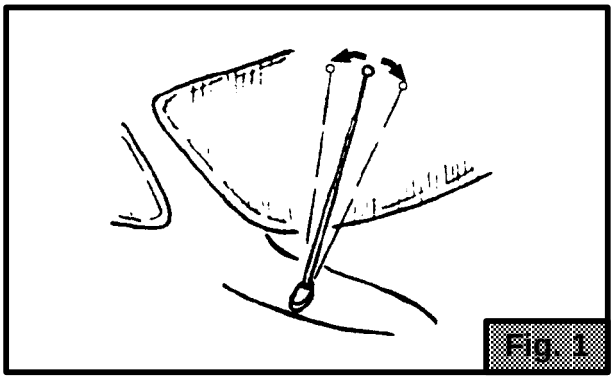

Fig. 1

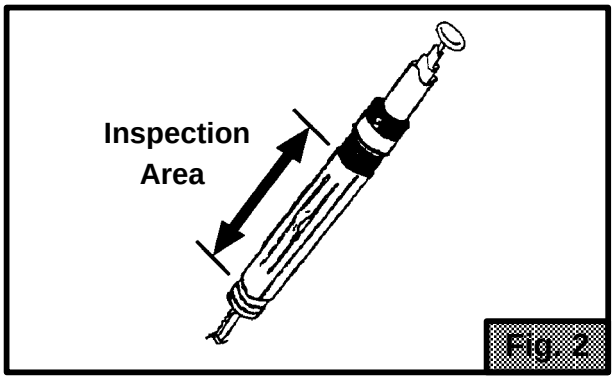

Fig. 2

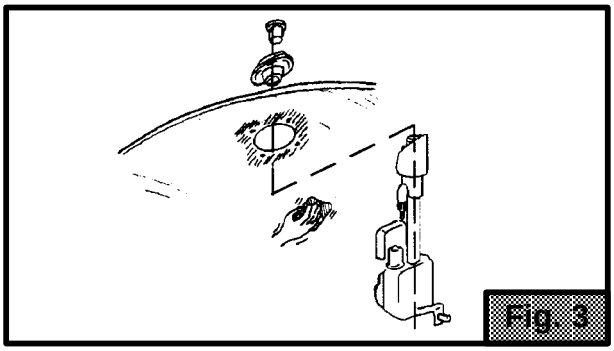

Fig. 3

REPAIR PROCEDURE (Cont'd):

4. Remove the antenna spacer grommet at the top of the antenna assembly and inspect for corrosion. Clean with 1500 grit sandpaper (Fig. 4).

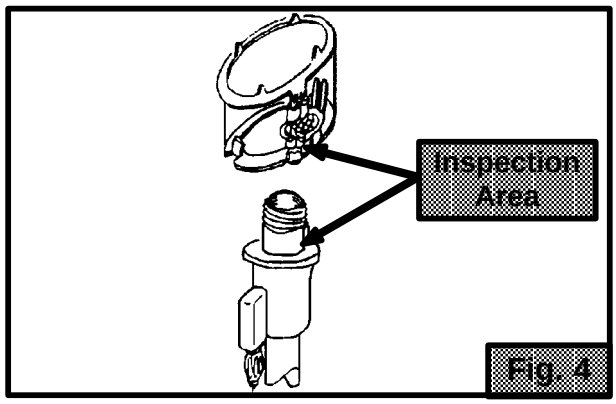

Fig. 4

5. Reinstall the antenna assembly. Be sure to install the external antenna nut (escutcheon) first. Then install the nut which holds the assembly to the inner bracket (Fig. 5).

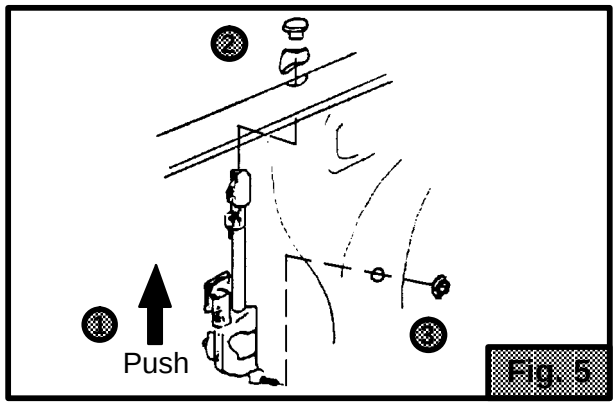

Fig. 5

6. Check to make sure that the teeth on the antenna spacer grommet make good contact with the inner fender well (Fig. 6).

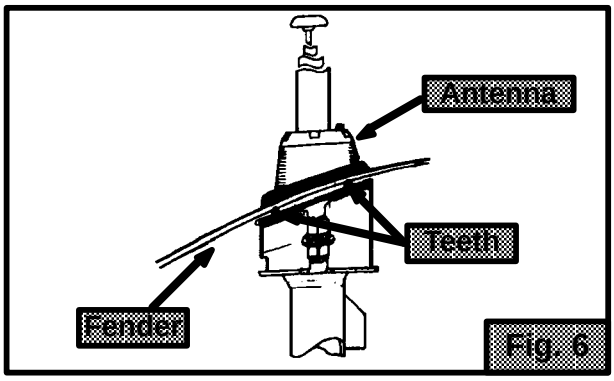

Fig. 6

7. Inspect the antenna cable connection and clean as necessary. Reconnect the antenna cable, the wire harness and the drain hose (Fig. 7).

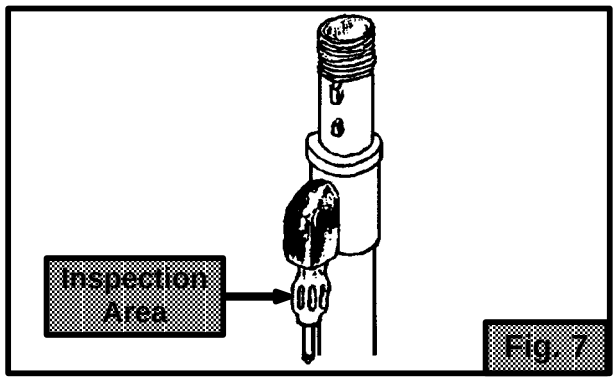

Fig. 7

WARRANTY INFORMATION:

OPCODE	DESCRIPTION	TIME	OPN	T1	T2
EL5001	Listed TSIB repair procedure (All Items)	1.0	86300–XXXXX	76	73

LEXUS
Technical Service Information Bulletin
May 16, 1997

Title:

CLEANING CASSETTE TAPE HEADS AND CAPSTANS

Models:

All Models

TSIB
AUDIO
AU001–97
REVISED

Introduction

The cassette tape head and capstan should be cleaned regularly to prevent poor sound quality and/or cassettes from jamming.

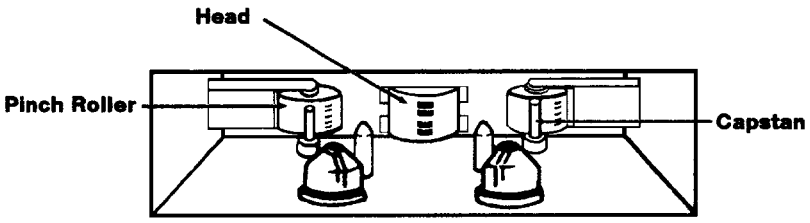

Fig. 1

Conditions

The following conditions can easily be avoided by regularly cleaning the head with a tape cleaner and only using good quality cassettes.

Poor Sound Quality due to Dirty Head

Since the tape head contacts the cassette tape, the tape head accumulates metal oxides and dirt particles from the tape. In time, a layer of dirt forms on the tape head resulting in poor transfer of information between the tape and the tape head. This typically causes a reduction of higher frequencies or a reduction of the brightness in sound quality.

Tape Speed

Tape speed is controlled by the tape capstan and pinch rollers. If the capstan and pinch rollers accumulate dirt, the tape may slip causing the music to play too fast or too slow.

Jamming

Dirt can make the capstans sticky, causing the tape to become entangled in the cassette mechanism. This can cause the cassette to become jammed in the player.

Cassette Tape Head Cleaners

To reduce the occurrence of these conditions, the following approved cassette cleaners are available through the non–parts system (Material Distribution Center).

TOOLS & MATERIALS	MATERIAL NUMBER	DESCRIPTION
Allsop 3 Cassette Recorder Cleaner	00113–AS710–00	Cleaning Cassette and Cleaning Solution with Instruction Sheet

NOTE:
Allow 15 minutes for the cleaning fluid to evaporate before playing a tape.

Cassette Tape Care Procedure

The following precautions should be taken to keep cassettes in good condition:

1. Remove the cassette from the player when the cassette is not in use.

2. Store the cassette in its case.

3. Store the cassette in a cool, dry area away from direct sunlight and magnetic components such as speakers.

4. Avoid touching the tape itself. This could result in poor sound quality or sound drop out.

5. Keep the tape tightly wound as shown in figure 2. Tape speed can be affected by loosely wound tape.

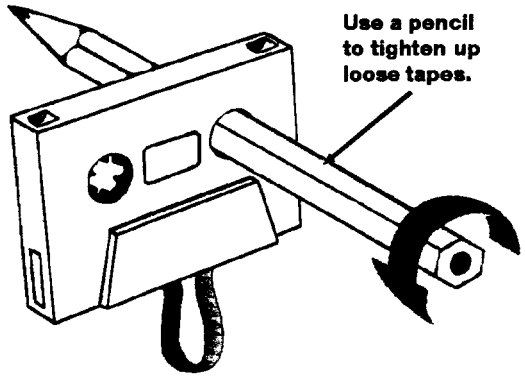

Fig. 2

6. Avoid inserting a cassette into the player if the cassette label is loose or peeling as shown in figure 3. This can cause a cassette to become stuck in the player.

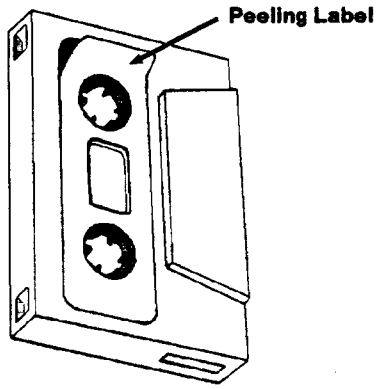

Fig. 3

7. Use cassettes that are 90 minutes or less in length. Cassettes over 90 minutes use extremely thin tape that is subject to stretch, resulting in poor sound quality.

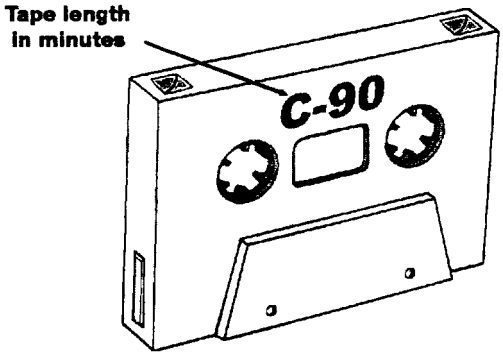

Fig. 4

Title:
LEXUS "DINGHY" TOWING GUIDE
Models:
All Models

Introduction

The following chart indicates which Lexus vehicles can be Dinghy towed (towed with four wheels on the ground) behind a Motorhome.

CAUTION:
Dinghy towing a vehicle behind a Motorhome requires special towing equipment and accessories. Please see your Motorhome Manufacturer / Service Outlet for recommended towing equipment.

Applicable Vehicles

- **All Models**

YEAR	MODEL	DINGHY TOWABLE		SPEED/DISTANCE LIMITS
		M/T	A/T	
1990–2000	LS 400	Not Towable		–
1992–2000	SC 400/300	Not Towable	Not Towable	–
1993–2000	GS 400/300	Not Towable		–
1992–1998	ES 300	Not Towable		–
1999–2000	ES 300	Yes		55 mph / 200 miles
1999–2000	RX 300 2WD	Yes		55 mph / 200 miles
1999–2000	RX 300 4WD	Yes		55 mph / 200 miles
1996–1997	LX 450	Not Towable		–
1998–2000	LX 470	Not Towable		–

NOTE:
After "Dinghy" Towing, or at the recommended distance limits, let the Engine idle for more than 3 minutes before operating the vehicle or resuming towing.

NOTE:
Vehicles that are Dinghy towable will not sustain internal damage to the transmission or transfer components, as long as speed/distance limits are observed. The transmission <u>must</u> be placed in the "neutral" position when Dinghy towing. Dinghy towing these vehicles does not eliminate the possibility of damage to other vehicle systems (Body, Chassis, Electrical Systems, etc.).

Warranty Information

OP CODE	DESCRIPTION	TIME	OPN	T1	T2
N/A	Not Applicable to Warranty	–	–	–	–

Title **LX 450 RUNNING BOARD INSTALLATION**

The following contains the installation procedure for the LX 450 Running board and its individual components (all parts are U.S. sourced).

RECOMMENDED TOOLS/MATERIALS:

- 13 mm Socket
- 10 mm Deep Well Socket
- Ratchet
- Torque Wrench
- 10 mm Box End Wrench
- 12 mm Crowfoot Wrench
- 12 mm Box End Wrench
- 13 mm Crowfoot Wrench
- 13 mm Box End Wrench
- Center Punch
- 1/4” Drill Bit
- Drill
- Drill Stop

PART NUMBER INFORMATION:

PART NUMBER	PART NAME
00228–60965–01	Kit, Running Board
00228–00939–01	Platform, Running Board
00228–60962	Pad, Step
00228–60967	Extension, Over fender, RH
00228–60968	Extension, Over fender, LH
00228–60969	Hardware, Over fender Extension
00228–00931	Hardware, Bracket, RH
00228–00930	Hardware, Bracket, LH
00228–00933	Cap, Front End, RH
00228–00934	Cap, Front End, LH
00228–00935	Cap, Rear End, RH
00228–00936	Cap, Rear End, LH

INSTALLATION PROCEDURES

Thoroughly clean all attachment areas and remove any excess undercoating as required to allow proper seating of the brackets. Inspect kit contents to identify components before attempting installation then follow the procedure below for each side of the vehicle.

VEHICLE PREPARATION

Detach the front mudguard from the vehicle by removing the (3) 10 mm mounting screws. The mounting screws are to be saved for use in later steps. Discard the mudguard.

DOOR EXTENSION

1. Each rear door extension is marked on the inside surface to identify the installation location (i.e. RH). Prior to installation, use the drilling template to locate where to drill 1/4 inch holes on the bottom of the vehicle rear door flare as shown in the illustration. Properly place the template on the bottom of the vehicle door flat as shown in figure 1. At the center of each drill hole location on the template, mark the center of each hole with a center punch. Drill previously marked holes through the rear door flare using a 1/4 inch drill bit with a drill stop set to 1/4 inch of penetration.

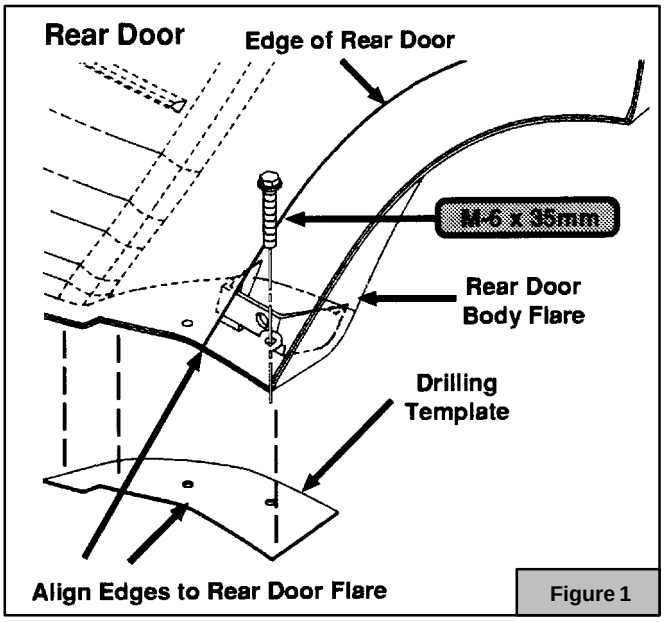

Figure 1

2. Open rear door and remove the (2) 10 mm bolts that hold the fender flare cover on as shown in figure 2. After the flare cover has been removed insert the M–6 x 35 mm long bolt through the rear hole in the flare as shown in figure 1.

3. Install the door extension bracket into the rear door extension. Place the door extension assembly onto the vehicle flare. Insert the previously installed M–6 x 35 mm long bolt through the flare and into the door extension and loosely install the M–6 nut. In the other drilled hole a plastic push rivet will be used.

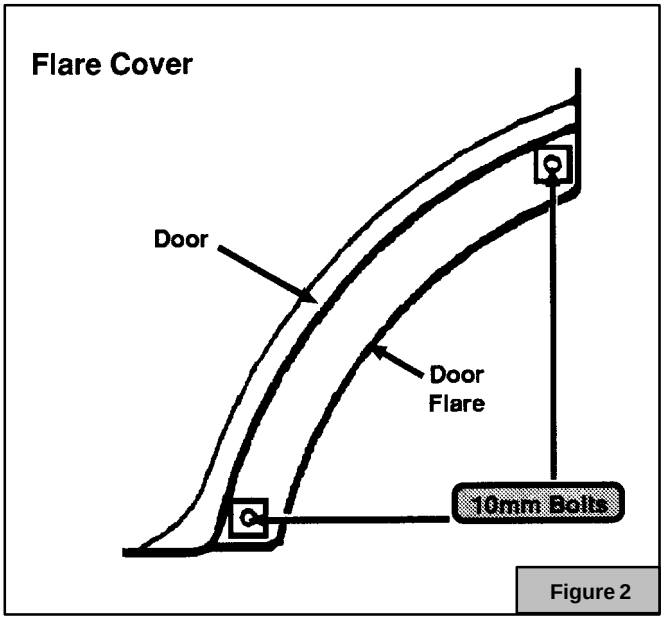

Figure 2

DOOR EXTENSION (Cont'd)

First, break off the stem that is connected to the head of the rivet (see figure 3). Put the rivet into the drilled hole and push it inward until the bottom part of the head is flat on the extension bracket. Place the stem in the rivet hole and push it inward until the stem is flat with the top of the rivet head. After the rivet has been secured, tighten the M–6 bolt to 4 ft. lbs. (figure 1).

4. When the bolt for the door extension is secured, carefully place the flare cover back on the flare and reinstall the factory supplied 10 mm bolts (figure 2) into their proper position. Be sure these bolts are secured before closing the rear door to the vehicle.

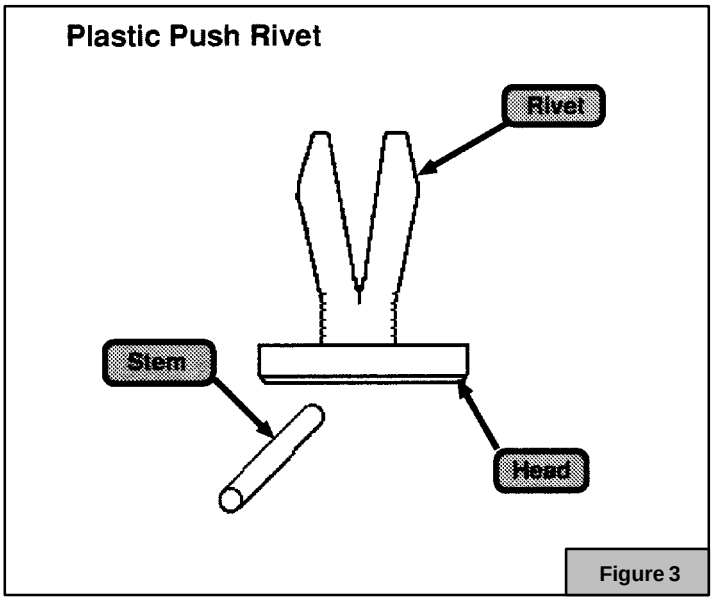

Figure 3

FRONT, MIDDLE, AND REAR BRACKET ATTACHMENT

NOTE: Each bracket is marked to note its location on the vehicle. The middle and rear brackets are interchangeable from passenger to drivers side, the front brackets are not. Figure 4 illustrates the passenger side (the drivers side is the same but opposite).

1. Loosely attach the side front and rear brackets to the body mounts behind the vehicle rocker panel using the appropriate M–8 bolts. The idle bracket location has a factory installed threaded stud. Place the bracket into location, with the stud going through the top slot. Loosely attach the bracket to the rocker panel with the provided M–8 bolt and M–8 nut. Do not tighten the nut or bolts at this time.

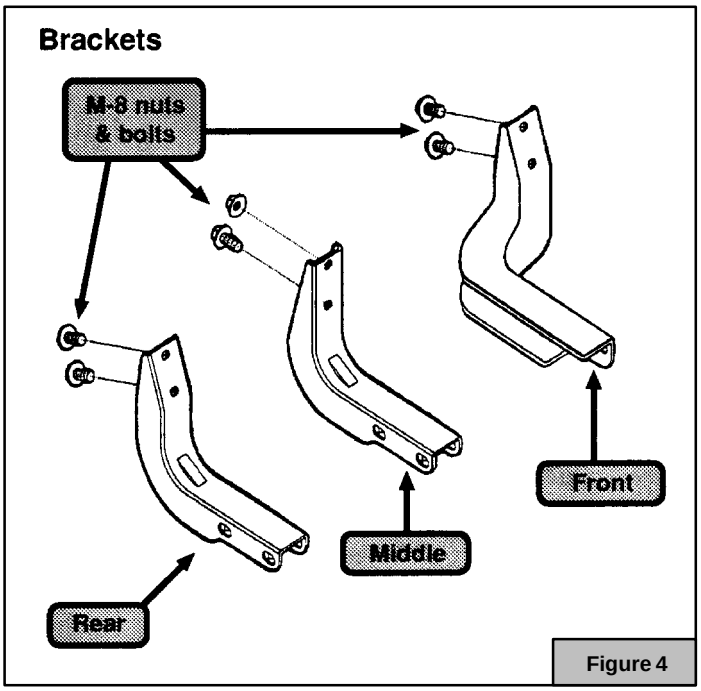

Figure 4

RUNNING BOARD ATTACHMENT

1. Before placing the running board onto the brackets, install the rear side end cap on the rear of the board by sliding the M–8 studs into the end plate slots. Loosely attach the provided M–8 nuts to the studs of the end cap (see figure 5). Do not tighten the end plate to the platform at this time.

2. Slide the running board assembly onto the installed brackets. Attach all brackets loosely to the running board with provided M–8 bolt assemblies (figure 5).

3. Tighten the brackets to the rocker panel. Torque all M–8 bolts and nuts to 12 ft. lbs.

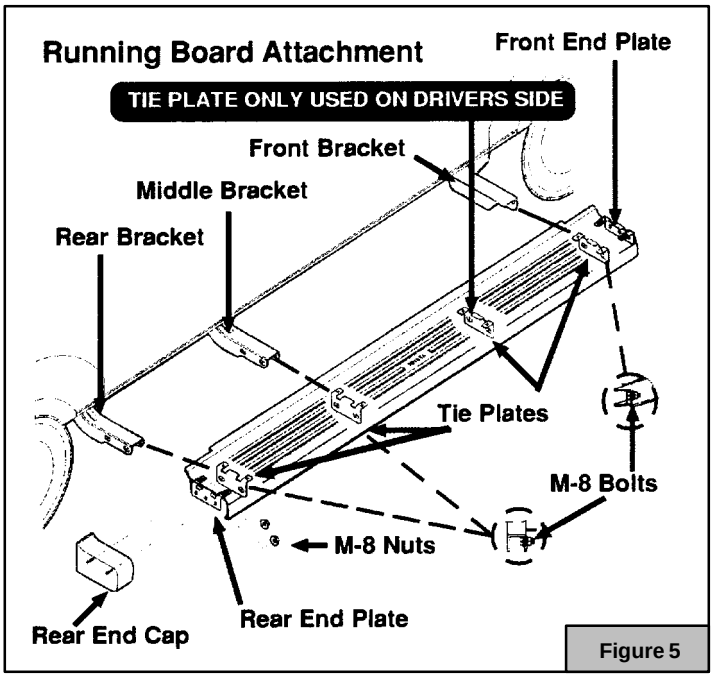

Figure 5

FRONT FLARE ASSEMBLY

NOTE: Each flare is marked on the inside surface to identify the correct installation location.

1. Position the front flare over the front of the running board. The top of the front flare will slide onto the front body flare (see figure 6).

2. Align the (3) front flare mounting holes over the corresponding vehicle mounting holes originally used for the mudguard. Loosely install the previously removed 10 mm mounting screws into their original position.

3. Adjust the front flare by pressing it firmly against the body flare in a position which allows no gap at the top. Tighten the mounting screws securely.

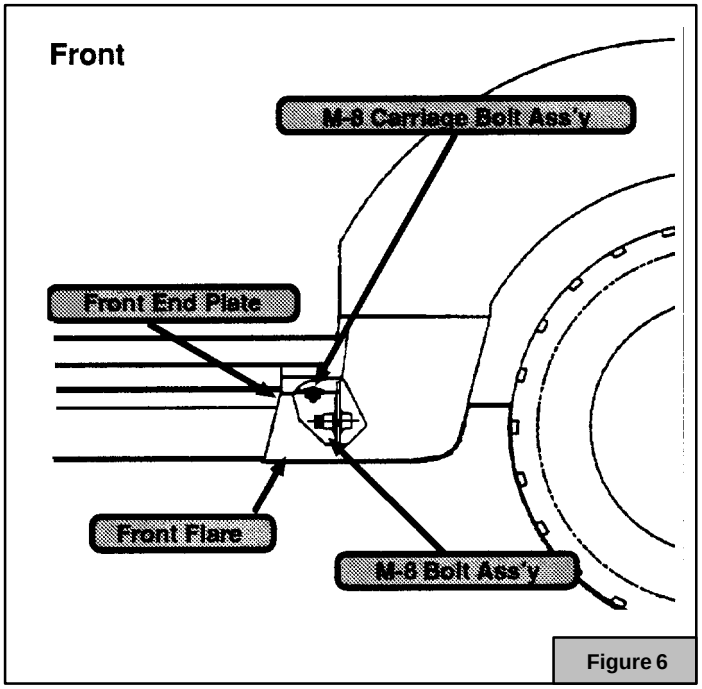

Figure 6

FINAL ASSEMBLY

1. Align the front of the running board so that it is level and flush with the front flare. The running board should be parallel to the vehicle and the rear end cap should line up with the fender extension. The gap between the bottom of the rear door extension and the top of the rear end cap should be a maximum of 1/2 inch (see figure 7).

2. After the running board has been aligned, tighten all brackets to the running board platform with the provided M–8 nut and bolt assemblies. Torque to 12 ft. lbs.

3. From underneath the running board, slide the front end plate against the front flare tab. When the tab is against the plate, tighten the M–8 nut to the running board with 12 ft. lbs. Then attach the tab with the provided M–8 bolt and nut and tighten to 12 ft. lbs. (refer to figure 6).

4. Slide the rear end cap towards the lip of the door extension until it is approximately 1/4 inch away. Tighten the end plate to the running board with 12 ft. lbs. Press the front of the end cap firmly against the front of the running board and tighten the M–8 nuts on the studs of the end cap to 6 ft. lbs. (see figure 7).

5. Open and close the rear door to confirm that there is no interference between the rear end cap and the rear door extension. If there is interference, insure that the running board is parallel to the vehicle and/or readjust the rear end cap.

6. Repeat the procedure for the other side of the vehicle.

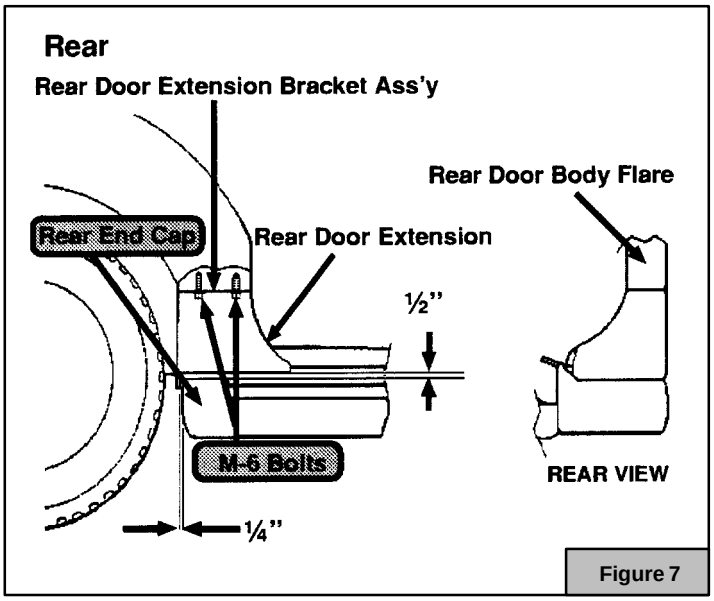

Figure 7

Title:
LEXUS "DINGHY" TOWING GUIDE
Models:
All Models

Introduction

The following chart indicates which Lexus vehicles can be Dinghy towed (towed with four wheels on the ground) behind a Motorhome.

CAUTION:
Dinghy towing a vehicle behind a Motorhome requires special towing equipment and accessories. Please see your Motorhome Manufacturer / Service Outlet for recommended towing equipment.

Affected Vehicles

- **All Models**

YEAR	MODEL	DINGHY TOWABLE		SPEED/DISTANCE LIMITS
		M/T	A/T	
1990 – 1999	LS 400	Not Towable		–
1992 – 1999	SC 300	Not Towable		–
1992 – 1999	SC 400	Not Towable		–
1993 – 1999	GS 300	Not Towable		–
1992 – 1998	ES 300	Not Towable		–
1999	ES 300	N/A	Yes	55 mph / 200 miles
1996 – 1997	LX 450	Not Towable		–
1998 – 1999	LX 470	Not Towable		–
1999	RX 300 2WD	N/A	Yes	55 mph / 200 miles
1999	RX 300 4WD	N/A	Yes	55 mph / 200 miles

NOTE:
After "Dinghy" Towing, let the Engine idle for more than 3 minutes.

NOTE:
Vehicles that are Dinghy towable will not sustain internal damage to the transmission or transfer components. The transmission <u>must</u> be placed in the "neutral" position when Dinghy towing. Dinghy towing these vehicles does not eliminate the possibility of damage to other vehicle systems (Body, Chassis, Electrical Systems, etc.).

Warranty Information

OP CODE	DESCRIPTION	TIME	OPN	T1	T2
N/A	Not Applicable to Warranty	–	–	–	–

Title:

WIND NOISE REPAIR KIT

Models:

All Models

Introduction

A kit containing special foam sponge material has been developed. This kit, when used in conjunction with procedures outlined in the Interior and Wind Noise Diagnosis Manual (P/N 00246-30015) and Lexus Service Information Bulletins, should enable effective wind noise repairs.

Affected Vehicles

- **All Models**

Parts Information

PART NUMBER	PART NAME	SIZE (MM)	QTY
08231-00810	Kit, Wind Noise	– – –	1
08231-00811*	Caulking Sponge Sealant No. 1	297 x 150 (T = 3.0)	2
08231-00812*	Caulking Sponge Sealant No. 2	297 x 150 (T = 5.0)	2
08231-00813*	Caulking Sponge Sealant No. 3	297 x 150 (T = 10.0)	2
08231-00814*	Caulking Sponge Sealant No. 4	297 x 150 (T = 3.0)	2
08231-00815*	Caulking Sponge Sealant No. 5	297 x 150 (T = 5.0)	2
08231-00816*	Caulking Sponge Sealant No. 6	297 x 150 (T = 5.0)	2

* All of these parts are included in the kit.

Kit Components

1. Caulking Sponge Sealant No. 1, No. 2 and No. 3 (Ept-sealer).

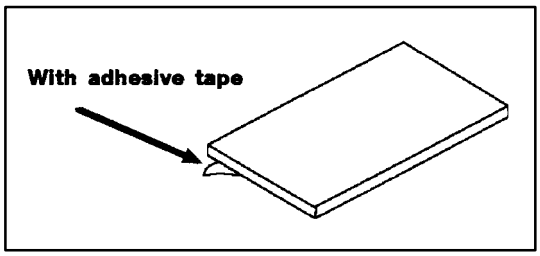

2. Caulking Sponge Sealant No. 4 and No. 5 (Ept-sealer). This sheet is divided into 27 strips, 5 mm wide.

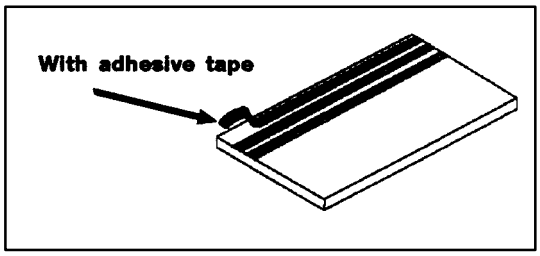

3. Caulking Sponge Sealant No. 6 (Ept-sealer).

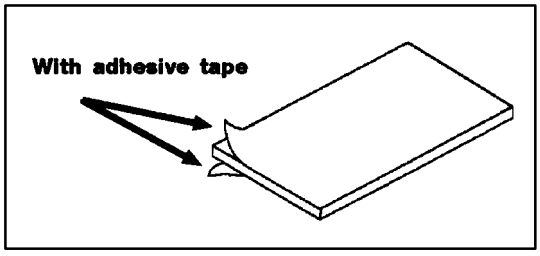

Title:
SEAT BELT EXTENDERS
Models:
All '94 through '98 models, and '99 RX 300

TSB Update Notice:
The information contained in this TSB updates BO007–97 dated October 24, 1997.

Introduction

Lexus customers who find it necessary to increase the length of their seat belts may obtain Seat Belt Extenders at **no cost** through their local Lexus dealer.

- The extender is available in 6 inch, 9 inch, 12 inch, 15 inch and 18 inch lengths.
- The extender is available **only in black.**
- Owners are informed of the seat belt extender availability through the Lexus Owner's Manual included in each vehicle.

The customer *(individual requiring the extender)* must visit a Lexus dealership to have the required measurements made and to complete the seat belt extender worksheet. The worksheet will allow the proper fitting and selection of a seat belt extender for the customer. The dealership personnel should then determine the applicable part number and place a ***Critical Order*** through the ***TDN Parts Network.***

The dealership service department should complete the affixed Seat Belt Extender Label and review the "owner instruction sheet" with the customer. The dealership should give a copy of the completed worksheet to the customer and keep the original in the customer's file.

To assure utmost owner satisfaction, it is recommended that a dealership designate one person to coordinate all activities related to the seat belt extender issue.

From past sales history, it is recommended that dealerships **do not stock** Seat belt extenders due to low demand and the need for customer fitting.

This bulletin contains the following information:

Procedure and Flow Chart ..... Page 2
Application Chart and Notes.....Page 3
Part Number Information .....Page 3
Owner Instructions .....Page 4
Seat Belt Extender Worksheet .....Page 5

Affected Vehicles

- All **Lexus** models, **1994** through **1998** model years, and **1999 RX 300**.

Warranty Information

OP CODE	DESCRIPTION	TIME	OPN	T1	T2
N/A	Not applicable to warranty	–	–	–	–

Procedure

1. Owner requests a seat belt extender from dealer.
2. Dealer verifies the need for a seat belt extender and obtains a current copy of this TSB and copies the worksheet.
3. Dealer measures the customer and completes the worksheet. Dealer determines the correct part number and places a Critical Order for the part through the TDN Parts Network.
4. Dealer receives seat belt extender and calls the customer in to check fit of the part.
5. If the seat belt extender fit is good, dealership personnel completes the customer information label on the part, explains usage of the part, and gives the customer a copy of the completed worksheet.
6. Dealer places a copy of the completed worksheet in the customer's records.

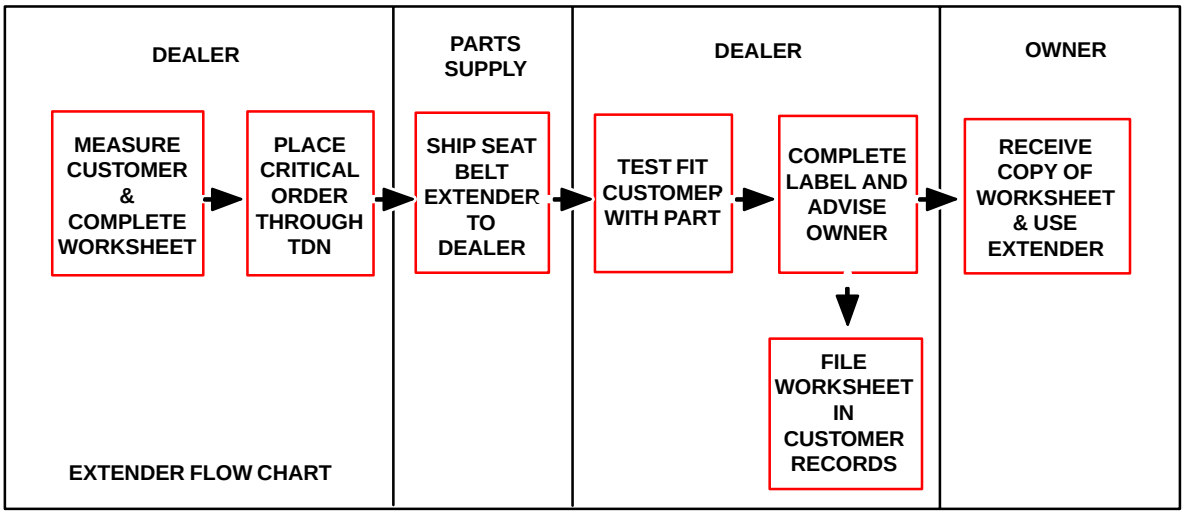

Sample Seat Belt Extender Label

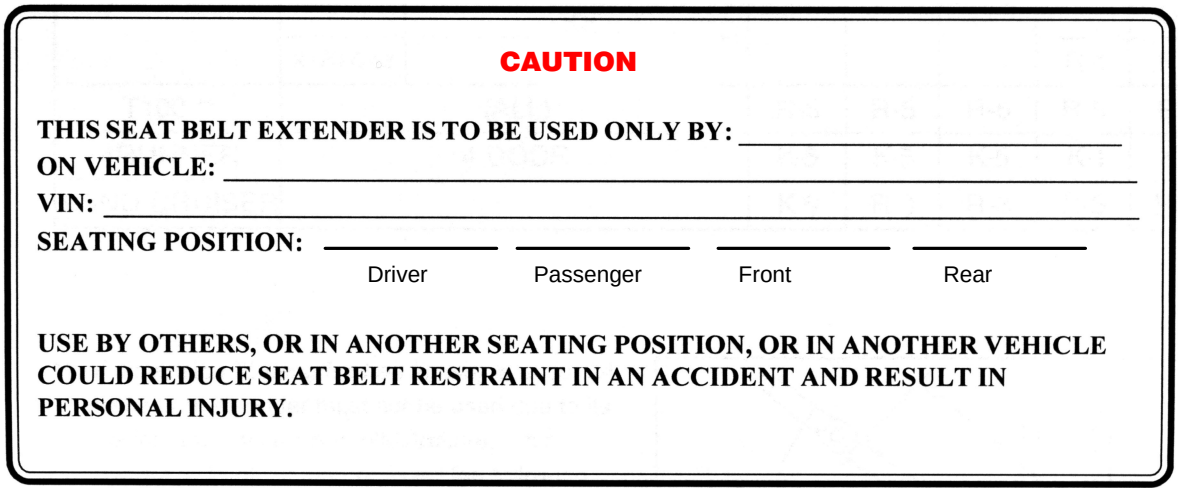

CAUTION

THIS SEAT BELT EXTENDER IS TO BE USED ONLY BY: _____

ON VEHICLE: _____

VIN: _____

SEATING POSITION: _____ _____ _____ _____

Driver Passenger Front Rear

USE BY OTHERS, OR IN ANOTHER SEATING POSITION, OR IN ANOTHER VEHICLE COULD REDUCE SEAT BELT RESTRAINT IN AN ACCIDENT AND RESULT IN PERSONAL INJURY.

Front Seat Belt Extender Applications

FRONT SEAT – EXTENDER APPLICATION					
MODEL	**’98**	**’97**	**’96**	**’95**	**’94**
LS 400	R–3	R–3	R–3	R–3	R–3
GS 400	R–5	N/A	N/A	N/A	N/A
GS 300		N–3	N–3	N–3	N–3
SC 400/300	R–3	R–3	R–3	R–3	R–3
ES 300	R–5	R–5	K–4	K–4	K–4
LX 450	N/A	R–3	R–3	N/A	N/A
LX 470	K–5	N/A	N/A	N/A	N/A
RX 300 (’99 MY)	R–5	N/A	N/A	N/A	N/A

Rear Seat Belt Extender Applications

REAR SEAT – EXTENDER APPLICATION					
MODEL	**’98**	**’97**	**’96**	**’95**	**’94**
LS 400	R–3	R–3	R–3	R–3	R–3
GS 400	K–5	N/A	N/A	N/A	N/A
GS 300		K–4	K–4	K–4	K–4
SC 400/300	R–3	R–3	R–3	R–3	R–3
ES 300 (Right & Left)	R–5	R–5	R–3	R–3	R–3
ES 300 (Center)	R–3	R–3*	N/A	N/A	N/A
LX 450	N/A	K–4**	K–4**	N/A	N/A
LX 470	K–5	N/A	N/A	N/A	N/A
RX 300 (’99 MY)	R–5	N/A	N/A	N/A	N/A

NOTICE:

* **The extender must NOT be used for the center rear seat belt (except on ’97 and ’98 model ES 300s as noted in the chart).**

** **Includes third seat application.**

Parts Information

PART NUMBER PREFIX: 73399–					
SERIES	**LENGTH**				
	6 INCH	**9 INCH**	**12 INCH**	**15 INCH**	**18 INCH**
K–4	–33010	–33020	–33030	–33040	–33050
K–5	–35010	–35020	–35030	–35040	–35050
N–3	–20011	–20021	–20031	–20041	–20051
R–3	–50010	–50020	–50030	–50040	–50050
R–5	–16060	–16070	–16080	–16090	–16100

Owner Instructions

Failure to follow the recommendations indicated below could result in less effectiveness of the seat belt restraint system in case of vehicle collision, causing personal injury.

The seat belt extender must not be used:

a. By anyone other than for whom it was provided (name recorded on seat belt extender).

b. In any vehicle and/or seat position other than the one for which it was provided.

c. When the seat belt extender is provided for rear seat positions (with automatic locking retractor), make sure the retractor is locked when in use.

If your seat belt cannot be fastened securely because it is not long enough, a personalized seat belt extender is available from your Lexus dealer free of charge.

Please contact your local Lexus dealer so that the dealer can order the proper required length for the extender. Bring the heaviest coat you expect to wear for proper measurement and selection of length. Additional ordering information is available at your Lexus dealer.

CAUTION:

When using the seat belt extender, observe the following. Failure to follow these instructions could result in reduced effectiveness of the seat belt restraint system in case of vehicle accident, increasing the chance of personal injury.

- **Never use the seat belt extender if you can COMFORTABLY fasten the seat belt without it.**
- **Remember that the extender provided for you may not be safe when used on a different vehicle, or for another person or at a different seating position than the one originally intended for.**

To connect the extender to the seat belt, insert the tab into the seat belt buckle so that the "PRESS" signs on the buckle–release buttons of the extender and the seat belt are both facing outward as shown.

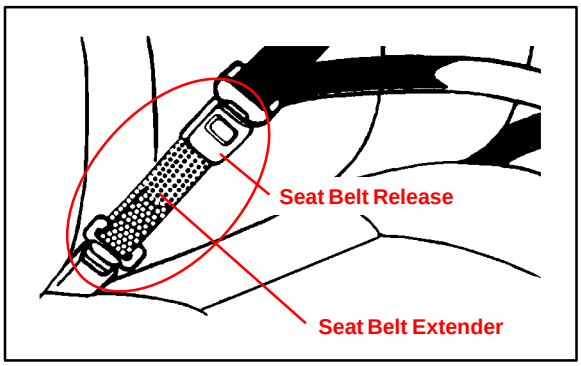

You will hear a click when the tab locks into the buckle.

When releasing the seat belt, press on the buckle–release button on the extender, not on the seat belt. This helps prevent damage to the vehicle interior and extender itself.

When not in use, remove the extender and store in the vehicle for future use.

SEAT BELT EXTENDER WORKSHEET

PLEASE COPY THIS ORIGINAL WORKSHEET FOR EACH EXTENDER NEEDED

CAUTIONS:

- **To minimize the chance and/or severity of injury in an accident, the seat belt extender must only be used:**
  1 By the person for whom it was provided
  2 In the seat position for which it was provided
- **The seat belt extender must never be used with any child safety seats.**
- **When the seat belt extender is provided for rear seat positions (with automatic locking retractor), make sure the retractor is locked when extender belt is in use.**

DEALER			SEAT BELT EXTENDER APPLICATION		APPLICANT		
DEALER CODE	DEALER NAME				APPLICANT NAME		
ADDRESS					ADDRESS		
CITY & STATE		ZIP			CITY & STATE	ZIP	PHONE
EMPLOYEE NAME	MODEL YEAR	BODY TYPE			SEATING POSITION	VEHICLE IDENTIFICATION NUMBER	

DIRECTIONS FOR DETERMINING PROPER EXTENDER LENGTH

1. **Place the seat in the position the applicant normally uses**
2. **With applicant in the seat, wearing thickest coat expected to be worn, pull belt all the way out and try to buckle belt**
   - **If the belt latches into buckle and feels comfortable against upper chest area, an extender is not needed.**
   - **If belt does not buckle continue with step 3**
   - **If buckle latches but belt has no slack remaining, continue with step 3**
3. **Measure distance between applicant's navel and seat belt buckle (dimension A) and enter on worksheet**
4. **With belt all the way out, measure distance between latch tip and buckle tip (dimension B) and enter on worksheet**
   NOTE: If belt latches but there is no slack enter zero as dimension B
5. **Subtract dimension B from dimension A and record number in check number box on worksheet**
6. **Seat belt extender length is dimension B rounded up to next extender length (without exceeding check number)**
   NOTE: If extender length exceeds check number, an extender can not be provided to the customer

Dimension A:
NAVEL TO BUCKLE

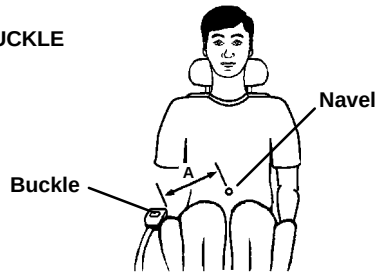

Dimension B:
LATCH TO BUCKLE

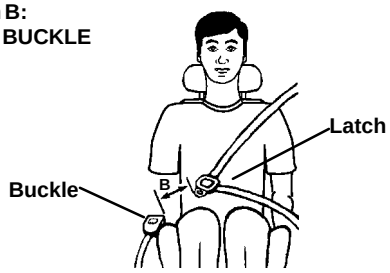

SEAT BELT EXTENDER CALCULATION		
DIMENSION A:	DIMENSION B:	CHECK NUMBER:

SEAT BELT EXTENDER AUTHORIZATION

- ***The same seat belt extender can be used for right and left seating applications.*** **Each seat belt extender will have a label identifying the owner, VIN and seating position. Seat belt extenders are available only in black.**
- **Applicant's Signature:**_____ **Date:** _____
  (Actual user of seat belt extender)

LEXUS

TECHNICAL SERVICE INFORMATION

REF: BODY

NO: BO002–96

DATE: AUGUST 9, 1996

MODEL: ALL MODELS

Title **STAINS ON RAPGARD APPLIED AREAS**

On some Lexus models, when Rapgard is removed from the vehicle, a stain is left on the paint surface. This stain can be seen under the clear coat and is not a defect of the clear coat. The stain corresponds to a wrinkled area of Rapgard which retained liquids, such as window washer fluid, that left a discoloration.

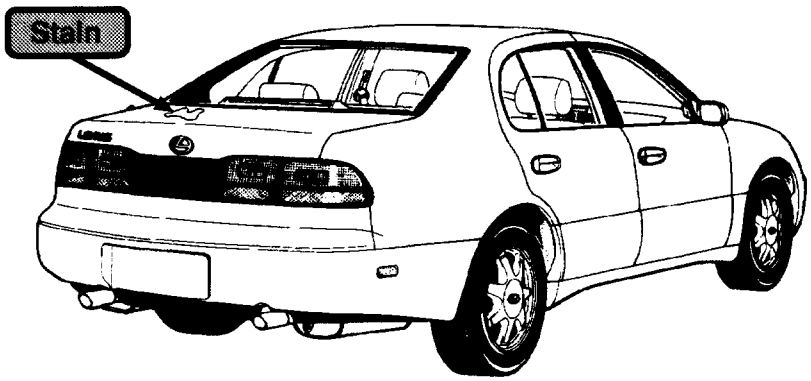

REPAIR PROCEDURE:

To remove a stain from a vehicle, heat the stain surface to a temperature of 70°C – 80°C. When the stain is removed it will not reappear.

Equipment –

1. Infrared lamp or dryer to heat the surface.
2. Aluminum foil or a damp cloth to protect plastic parts from deformation.

Procedure –

1. Apply aluminum foil to adjoining plastic parts or cool with damp cloth periodically.
2. Use an infrared lamp or dryer on the stain developed area and heat for 5 to 10 minutes at 70°C – 80°C.
3. After heating for 5 minutes, check whether the stain has disappeared. If the stain still remains, reheat the area and check again.

NOTE: Take care that the body's paint surface temperature does not become too high.

WARRANTY INFORMATION:

OPCODE	DESCRIPTION	TIME	OPN	T1	T2
BD6004	Remove stains from paint surface caused by Rapgard	0.6	53301–XXXXX	61	99

Title **SEAT BELT EXTENDERS FOR 1993 THROUGH 1997 MODELS**

Lexus customers who find it necessary to increase the length of their seat belts may obtain Seat Belt Extenders at no cost through their local Lexus dealer.

- The extender is available in black only, in 6, 9, 12, 15 and 18 inch lengths.
- Owners are informed of the seat belt extender availability through the Lexus Owner's Manual included in each vehicle.

The customer *(individual requiring the extender)* must visit a Lexus Dealership to have the required measurements made and to complete the seat belt extender worksheet. The worksheet will allow the proper fitting and selection of a seat belt extender for the customer. The dealership personnel should then determine the applicable part number and place a *Critical Order* through the *TDN Parts Network.*

Included in this bulletin is the information covering the1993 through 1997 model years:

Contents	Page
Flow Chart	2
Application/Part Number	3
Owner Instruction Sheet	4
Statement from Owner's Manual	5
Seat Belt Extender Worksheet	6

The dealership service department should complete the affixed Seat Belt Extender Label and review the "owner instruction sheet" with the customer. The dealership should give a copy of the completed worksheet to the customer and keep the original in the customer's file.

To assure utmost owner satisfaction, it is recommended that a dealership designate one person to coordinate all activities related to the seat belt extender issue.

From past sales history, it is recommended that dealerships **do not** stock seat belt extenders due to low demand and the need for customer fitting.

PROCEDURE:

1. Owner requests a seat belt extender from the dealer.

2. Dealer verifies the need for a seat belt extender, obtains a current copy of the TSB, and copies the worksheet.

3. Dealer measures the customer and completes the worksheet. Dealer determines the correct part number and places a Critical Order for the part through the TDN Parts Network.

4. Dealer receives the seat belt extender and calls the customer in to check fit of the part.

5. If the seat belt extender fit is OK, dealership personnel complete the customer information label on the part, explains usage of the part to customer, then gives customer a copy of the completed worksheet.

6. Dealer places a copy of the completed worksheet in the customer's records.

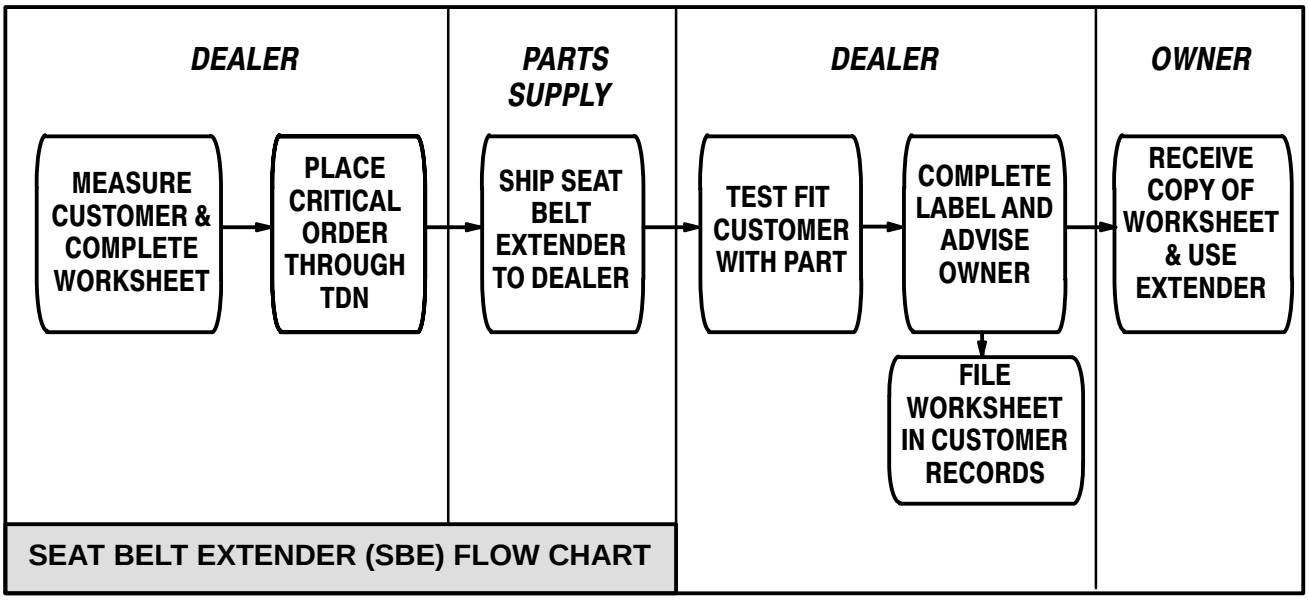

SAMPLE SEAT BELT LABEL:

CAUTION

THIS SEAT BELT EXTENDER IS TO BE USED ONLY BY: _____

ON VEHICLE: _____

VIN: _____

SEATING POSITION: _____ _____ _____ _____

Driver Passenger Front Rear

USE BY OTHERS, OR IN ANOTHER SEATING POSITION, OR IN ANOTHER VEHICLE COULD REDUCE SEAT BELT RESTRAINT IN AN ACCIDENT AND RESULT IN PERSONAL INJURY.

PART NUMBER INFORMATION:

Locate the series code on the ***series application*** charts, then use the ***part number by length*** chart to identify the correct part number for the specific customer.

FRONT SEAT EXTENDER SERIES APPLICATION TABLE:

Model	1997	1996	1995	1994	1993
LS 400	R-3	R-3	R-3	R-3	R-3
GS 300	N-3	N-3	N-3	N-3	N-3
SC 400	R-3	R-3	R-3	R-3	R-3
SC 300	R-3	R-3	R-3	R-3	R-3
ES 300	R-5	K-4	K-4	K-4	K-4
LX 450	R-3	R-3	-	-	-

REAR SEAT EXTENDER SERIES APPLICATION TABLE:

Model	1997	1996	1995	1994	1993
LS 400	R-3	R-3	R-3	R-3	R-3
GS 300	K-4	K-4	K-4	K-4	K-4
SC 400	R-3	R-3	R-3	R-3	R-3
SC 300	R-3	R-3	R-3	R-3	R-3
ES 300.. Right & Left	R-5	R-3	R-3	R-3	R-3
ES 300..Center	R-3*	-	-	-	-
LX 450	K-4**	K-4**	-	-	-

NOTE: **The extender must not be used for the center rear seat belt (except '97 model ES 300 as noted in the chart).*
***Includes third seat application.*

PART NUMBER BY REQUIRED LENGTH (73399–):

SERIES	6 INCH	9 INCH	12 INCH	15 INCH	18 INCH
K-4	33010	33020	33030	33040	33050
N-3	20011	20021	20031	20041	20051
R-3	50010	50020	50030	50040	50050
R-5	16060	16070	16080	16090	16100

OWNER INSTRUCTION FOR PERSONALIZED SEAT BELT EXTENDER:

CAUTION FOR USE OF SEAT BELT EXTENDERS:

1. Never use the seat belt extender if you can fasten the seat belt without it.

2. Remember the seat belt extender provided for you may not be safe when used in a different vehicle, or for another person or at a seating position different than specified.

3. When the seat belt extender is provided for a rear seat position (with automatic locking retractor), make sure the retractor is locked when in use.

4. FAILURE TO FOLLOW THESE INSTRUCTIONS COULD RESULT IN A LESS EFFECTIVE SEAT BELT RESTRAINT SYSTEM IN CASE OF A VEHICLE ACCIDENT, CAUSING PERSONAL INJURY.

USING THE SEAT BELT EXTENDER:

1. Connect the seat belt extender to the seat belt by inserting the tab into the seat belt buckle so the buckle release buttons of the seat belt extender and the seat belt are located on the same side as shown in the illustration. You will hear a click when the tab properly locks into the buckle.

2. MAKE SURE THAT THE CONNECTION IS SECURE AND THE SEAT BELT EXTENDER IS NOT TWISTED.

3. When releasing the seat belt, press on the buckle release button on the seat belt extender, not on the seat belt. This helps prevent damage to the vehicle interior and seat belt extender.

4. When not in use, remove the extender and store in the vehicle.

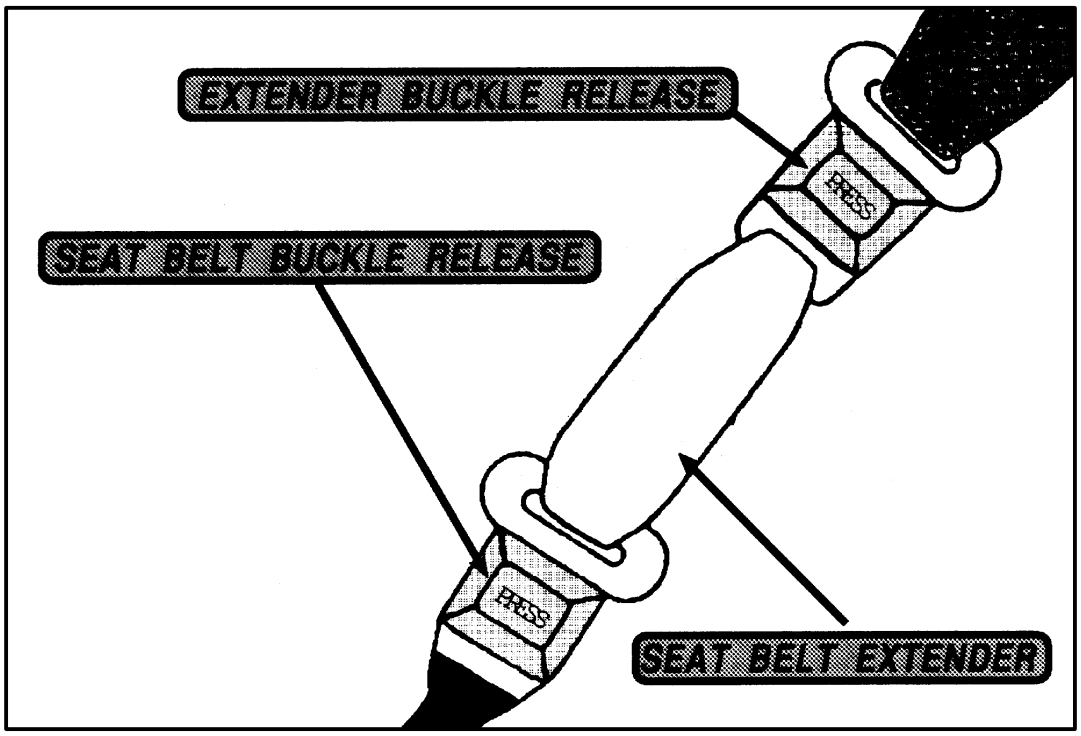

OWNER'S MANUAL TEXT:

SEAT BELT EXTENDER

If your seat belt cannot be fastened securely because it is not long enough, a personalized seat belt extender is available from your Lexus dealer free of charge.

Please contact your local Lexus dealer so that the dealer can order a seat belt extender of the proper required length. Bring the heaviest coat you expect to wear for proper measurement and selection of length. Additional ordering information is available at your Lexus dealer.

CAUTION:

When using the seat belt extender, observe the following. Failure to follow these instructions could result in less effectiveness of the seat belt restraint system in case of a vehicle accident, increasing the chance of personal injury.

- Never use the seat belt extender if you can fasten the seat belt without it.

- Remember that the seat belt extender provided for you may not be safe when used on a different vehicle, or for another person and/or at different seating positions than specified.

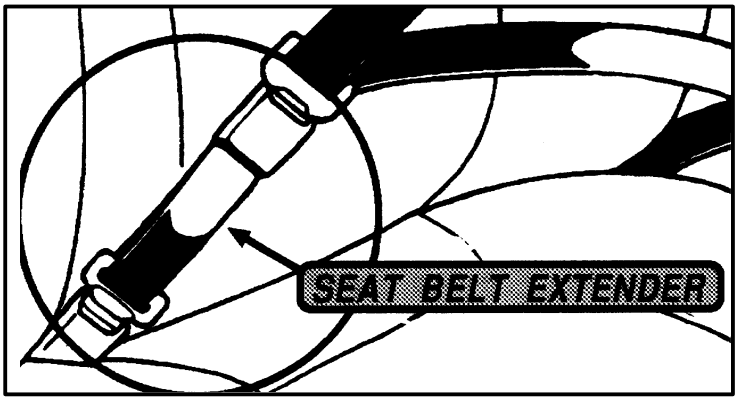

To connect the seat belt extender to the seat belt, insert the tab into the seat belt buckle so that the buckle release buttons of the seat belt extender and the seat belt are both facing outward as shown.

You will hear a click when the tab locks into the buckle. When releasing the seat belt, press on the buckle–release button on the seat belt extender, not on the seat belt. This helps prevent damage to the vehicle interior and seat belt extender itself.

When not in use, remove the seat belt extender and store in the vehicle for future use.

CAUTION:

After inserting the tab, make sure that the connection is secure and the seat belt extender is not twisted.

SEAT BELT EXTENDER WORKSHEET

Please copy this original worksheet for each extender needed.

CAUTION: To minimize the chance and/or severity of injury in an accident, the seat belt extender must not be used:

- By anyone but the person for whom it was provided, and
- In any vehicle or seat specified other than the one for which it was provided, and
- With any car child safety seats.

When the seat belt extender is provided for rear seat positions (with automatic locking retractor), make sure the retractor is locked when in use.

In all cases seat belts must be worn below the abdomen by pregnant women.

DEALER			PLEASE PRINT CLEARLY	APPLICANT		
DEALER CODE	DEALER NAME			APPLICANT NAME		
ADDRESS				ADDRESS		
CITY AND STATE		ZIP CODE		CITY AND STATE	ZIP CODE	TELEPHONE
DEALER EMPLOYEE NAME	MODEL YEAR	BODY TYPE		SEAT POSITION F / R	VEHICLE IDENTIFICATION NUMBER	

DIRECTIONS FOR DETERMINING PROPER EXTENDER LENGTH

1. Place the seat in the position the person normally uses.
2. With the person in the seat, extend the seat belt as much as possible and see if the belt latches.
3. If the buckle latches but has no slack remaining, the dimension for Figure 2 is zero. If the seat belt does not latch, measure the distance from the seat belt latch edge to the seat belt buckle as shown in Figure 2 below, and note the dimension.
4. Measure the lap area directly below the navel to the edge of the buckle as shown in Figure 1 and note the dimension.
5. The difference between Figure 1 and Figure 2 measurements is the "Allowable Margin". (Do not use this dimension for the extender length.)
6. Take the measurement in Figure 2 and round it up to the next extender size available, without exceeding the "Allowable Margin".

FIGURE 1
DIMENSION FROM NAVEL TO BUCKLE

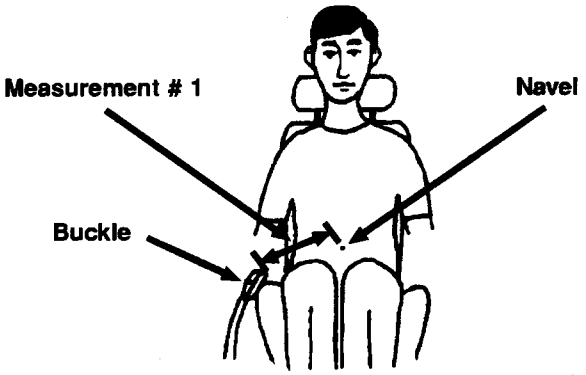

FIGURE 2
DIMENSION FROM LATCH TO BUCKLE

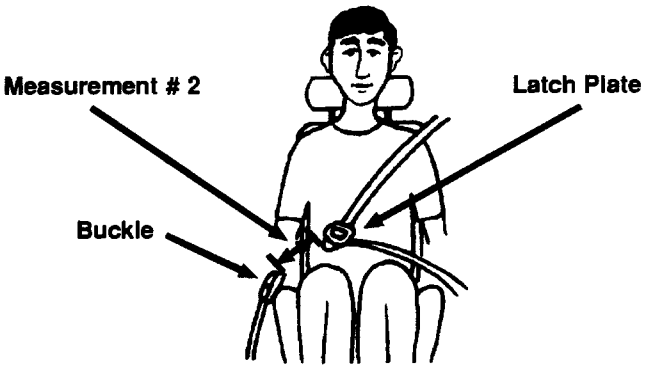

Measurement #1 (Figure 1) - Measurement #2 (Figure 2) = "Allowable Margin"

_____ - _____ = _____

NOTE: The length of the extender must not exceed the "Allowable Margin", due to design and construction features

AUTHORIZATION

The same extender can be used for right and left seating applications. Each seat belt extender will be affixed with a label identifying the owner, vehicle VIN and seating position. Extenders are available in one color only.

_____ APPLICANT'S SIGNATURE (Actual user of seat belt extender)

_____ DATE

LEXUS

Technical Service Information Bulletin

July 3, 1998

Title:

1999 LEXUS SEAT BELT EXTENDERS

Models:

All ’95 through ’99 models

BODY

BO003–98

Introduction

Lexus customers who find it necessary to increase the length of their seat belts may obtain Seat Belt Extenders at **no cost** through their local Lexus dealer.

- The extender is available in 6 inch, 9 inch, 12 inch, 15 inch and 18 inch lengths.
- The extender is available **only in black**.
- Owners are informed of the seat belt extender availability through the Lexus Owner’s Manual included in each vehicle.

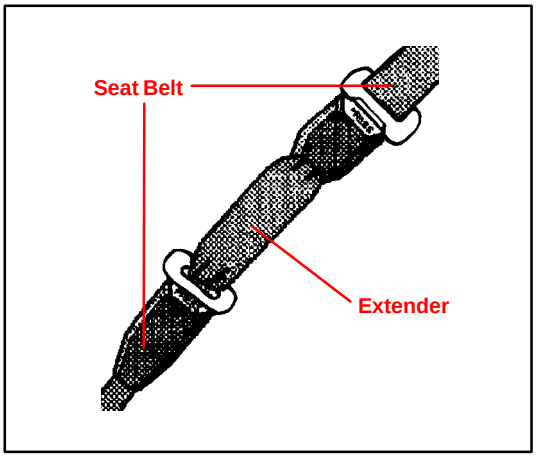

The customer *(individual requiring the extender)* must visit a Lexus dealership to have the required measurements made and to complete the seat belt extender worksheet. The worksheet will allow the proper fitting and selection of a seat belt extender for the customer. The dealership personnel should then determine the applicable part number and place a ***Critical Order*** through the ***TDN Parts Network.***

The dealership service department should complete the affixed Seat Belt Extender Label and review the “owner instruction sheet” with the customer. The dealership should give a copy of the completed worksheet to the customer and keep the original in the customer’s file.

To assure utmost owner satisfaction, it is recommended that a dealership designate one person to coordinate all activities related to the seat belt extender issue.

From past sales history, it is recommended that dealerships **do not stock** Seat belt extenders due to low demand and the need for customer fitting.

This bulletin contains the following information:

Procedure and Flow Chart ..... Page 2
Application Chart and Notes..... Page 3
Part Number Information ..... Page 3
Owner Instructions ..... Page 4
Seat Belt Extender Worksheet ..... Page 5

Affected Vehicles

- All **1995** through **1999** model year **Lexus** vehicles.

Warranty Information

OP CODE	DESCRIPTION	TIME	OPN	T1	T2
N/A	Not Applicable to Warranty	–	–	–	–

Procedure

1. Owner requests a seat belt extender from dealer.
2. Dealer verifies the need for a seat belt extender and obtains a current copy of this TSB and copies the worksheet.
3. Dealer measures the customer and completes the worksheet. Dealer determines the correct part number and places a Critical Order for the part through the TDN Parts Network.
4. Dealer receives seat belt extender and calls the customer in to check fit of the part.
5. If the seat belt extender fit is good, dealership personnel completes the customer information label on the part, explains usage of the part, and gives the customer a copy of the completed worksheet.
6. Dealer places a copy of the completed worksheet in the customer's records.

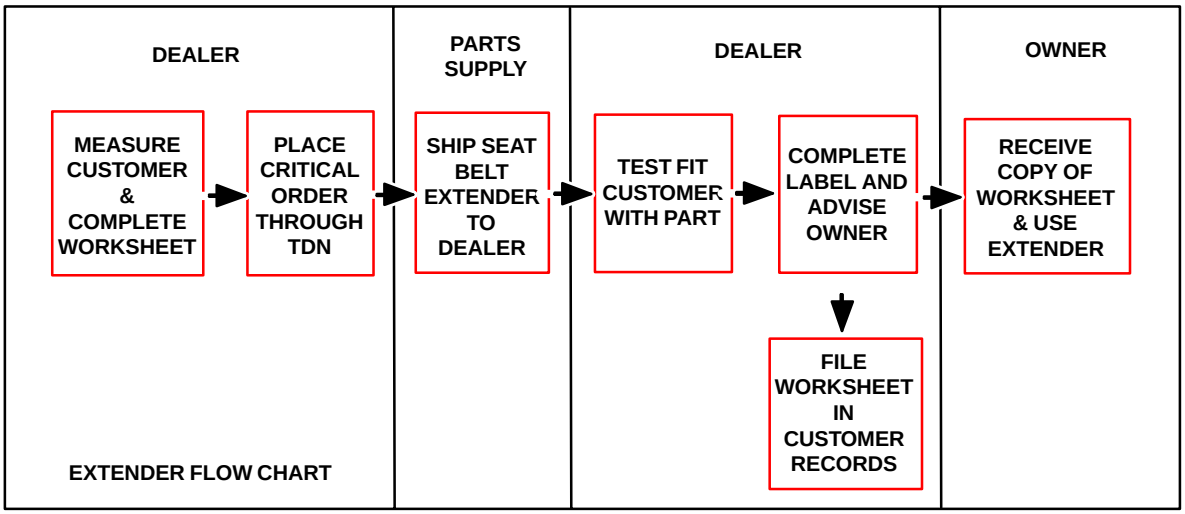

Sample Seat Belt Extender Label

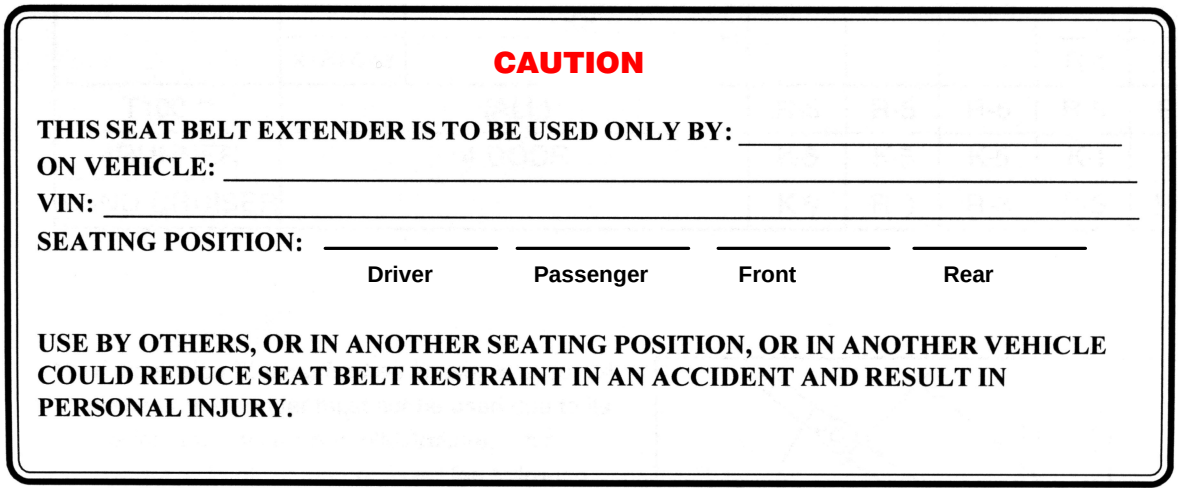

CAUTION

THIS SEAT BELT EXTENDER IS TO BE USED ONLY BY: _____

ON VEHICLE: _____

VIN: _____

SEATING POSITION: _____ _____ _____ _____

Driver Passenger Front Rear

USE BY OTHERS, OR IN ANOTHER SEATING POSITION, OR IN ANOTHER VEHICLE COULD REDUCE SEAT BELT RESTRAINT IN AN ACCIDENT AND RESULT IN PERSONAL INJURY.

Front Seat Belt Extender Applications

FRONT SEAT – EXTENDER APPLICATION					
MODEL	**'99**	**'98**	**'97**	**'96**	**'95**
LS 400	R–3	R–3	R–3	R–3	R–3
GS 400/300	R–5	R–5	N–3	N–3	N–3
SC 400/300	R–3	R–3	R–3	R–3	R–3
ES 300	R–5	R–5	R–5	K–4	K–4
LX 470/450	K–5	K–5	R–3	R–3	N/A
RX 300	R–5	N/A	N/A	N/A	N/A

Rear Seat Belt Extender Applications

REAR SEAT – EXTENDER APPLICATION					
MODEL	**'99**	**'98**	**'97**	**'96**	**'95**
LS 400	R–3	R–3	R–3	R–3	R–3
GS 400/300	K–5	K–5	K–4	K–4	K–4
SC 400/300	R–3	R–3	R–3	R–3	R–3
ES 300 (Right & Left)	R–5	R–5	R–5	R–3	R–3
ES 300 (Center)	R–3	R–3	R–3*	N/A	N/A
LX 470/450	K–5	K–5	K–4**	K–4**	N/A
RX 300	R–5	N/A	N/A	N/A	N/A

NOTICE:

* **The extender must NOT be used for the center rear seat belt (except on 1997 through 1999 model ES 300s as noted in the chart).**

** **Includes third seat application.**

Parts Information

PART NUMBER PREFIX: 73399–					
SERIES	**LENGTH**				
	6 INCH	**9 INCH**	**12 INCH**	**15 INCH**	**18 INCH**
K–4	–33010	–33020	–33030	–33040	–33050
K–5	–35010	–35020	–35030	–35040	–35050
N–3	–20011	–20021	–20031	–20041	–20051
R–3	–50010	–50020	–50030	–50040	–50050
R–5	–16060	–16070	–16080	–16090	–16100

Owner Instructions

Failure to follow the recommendations indicated below could result in less effectiveness of the seat belt restraint system in case of vehicle collision, causing personal injury.

The seat belt extender must not be used:

a. By anyone other than for whom it was provided (name recorded on seat belt extender).

b. In any vehicle and/or seat position other than the one for which it was provided.

c. When the seat belt extender is provided for rear seat positions (with automatic locking retractor), make sure the retractor is locked when in use.

If your seat belt cannot be fastened securely because it is not long enough, a personalized seat belt extender is available from your Lexus dealer free of charge.

Please contact your local Lexus dealer so that the dealer can order the proper required length for the extender. Bring the heaviest coat you expect to wear for proper measurement and selection of length. Additional ordering information is available at your Lexus dealer.

CAUTION:

When using the seat belt extender, observe the following. Failure to follow these instructions could result in reduced effectiveness of the seat belt restraint system in case of vehicle accident, increasing the chance of personal injury.

- **Never use the seat belt extender if you can COMFORTABLY fasten the seat belt without it.**
- **Remember that the extender provided for you may not be safe when used on a different vehicle, or for another person or at a different seating position than the one originally intended for.**
- **The seat belt extender must never be used with any child safety seats.**

To connect the extender to the seat belt, insert the tab into the seat belt buckle so that the "PRESS" signs on the buckle–release buttons of the extender and the seat belt are both facing outward as shown.

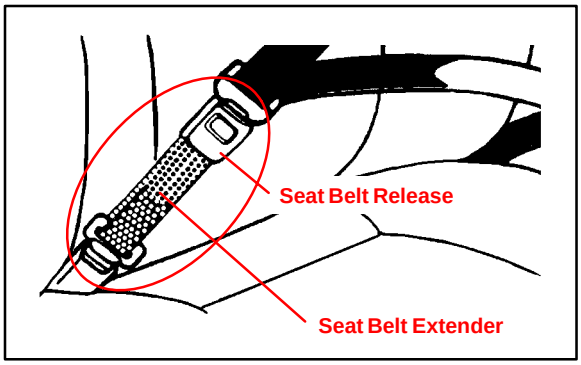

You will hear a click when the tab locks into the buckle.

When releasing the seat belt, press on the buckle–release button on the extender, not on the seat belt. This helps prevent damage to the vehicle interior and extender itself.

When not in use, remove the extender and store in the vehicle for future use.

SEAT BELT EXTENDER WORKSHEET

PLEASE COPY THIS ORIGINAL WORKSHEET FOR EACH EXTENDER NEEDED

CAUTIONS:

- **To minimize the chance and/or severity of injury in an accident, the seat belt extender must only be used:**
  1 By the person for whom it was provided
  2 In the seat position for which it was provided
- **The seat belt extender must never be used with any child safety seats.**
- **When the seat belt extender is provided for rear seat positions (with automatic locking retractor), make sure the retractor is locked when extender belt is in use.**

DEALER			SEAT BELT EXTENDER APPLICATION		APPLICANT		
DEALER CODE	DEALER NAME				APPLICANT NAME		
ADDRESS					ADDRESS		
CITY & STATE		ZIP			CITY & STATE	ZIP	PHONE
EMPLOYEE NAME	MODEL YEAR	BODY TYPE			SEATING POSITION	VEHICLE IDENTIFICATION NUMBER	

DIRECTIONS FOR DETERMINING PROPER EXTENDER LENGTH

1. **Place the seat in the position the applicant normally uses**
2. **With applicant in the seat, wearing thickest coat expected to be worn, pull belt all the way out and try to buckle belt**
   - **If the belt latches into buckle and feels comfortable against upper chest area, an extender is not needed.**
   - **If belt does not buckle continue with step 3**
   - **If buckle latches but belt has no slack remaining, continue with step 3**
3. **Measure distance between applicant's navel and seat belt buckle (dimension A) and enter on worksheet**
4. **With belt all the way out, measure distance between latch tip and buckle tip (dimension B) and enter on worksheet**
   NOTE: If belt latches but there is no slack enter zero as dimension B
5. **Subtract dimension B from dimension A and record number in check number box on worksheet**
6. **Seat belt extender length is dimension B rounded up to next extender length (without exceeding check number)**
   NOTE: If extender length exceeds check number, an extender can not be provided to the customer

Dimension A:
NAVEL TO BUCKLE

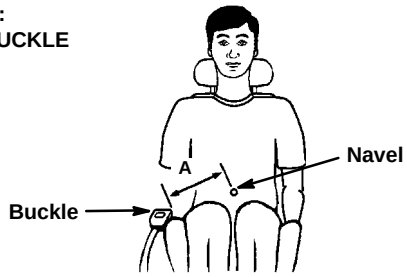

Dimension B:
LATCH TO BUCKLE

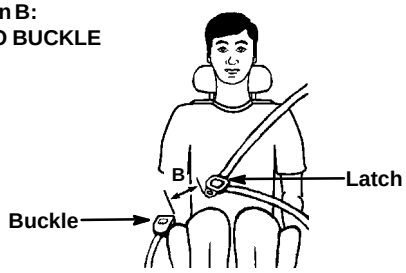

SEAT BELT EXTENDER CALCULATION		
DIMENSION A:	DIMENSION B:	CHECK NUMBER:

SEAT BELT EXTENDER AUTHORIZATION

- ***The same seat belt extender can be used for right and left seating applications.*** **Each seat belt extender will have a label identifying the owner, VIN and seating position. Seat belt extenders are available only in black.**
- **Applicant's Signature:**_____ **Date:** _____
  (Actual user of seat belt extender)

Title **WIPER INSERT REPLACEMENT METHOD**

To improve serviceability, the wiper blade rubber inserts will now be available separately from the steel backing plates as shown below.

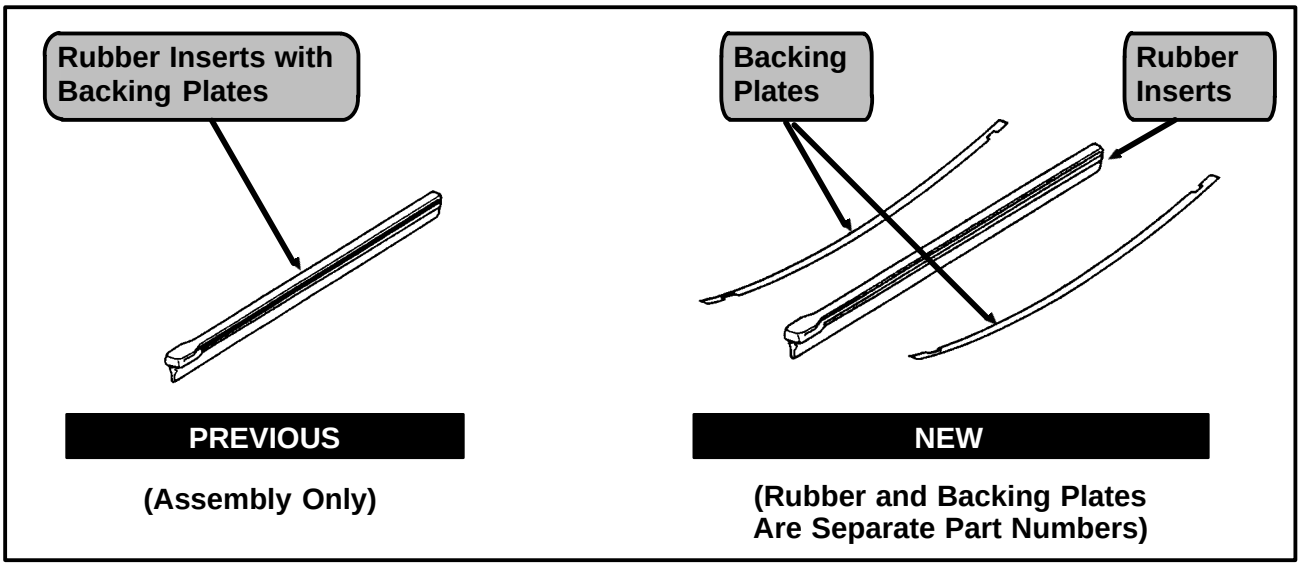

PART NUMBER INFORMATION:

Part Numbers of the new rubber inserts and steel backing plates which correspond to the previous complete assemblies are found in the Parts Operations Communications Update dated June 24, 1995.

REPLACEMENT PROCEDURES:

1. Remove the wiper frame from the wiper arm.

NOTE: Put a towel or equivalent between the wiper arm end and the windshield glass to prevent damage to the glass.

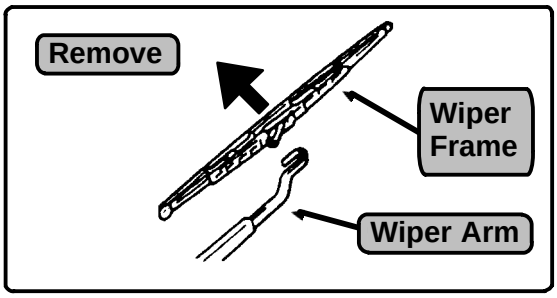

2. Remove the rubber insert, with the steel backing plates, from the wiper frame.

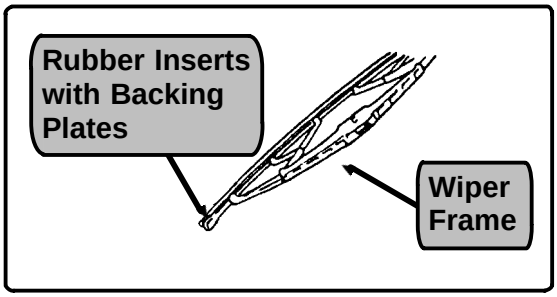

REPLACEMENT PROCEDURES: (Cont'd.)

3. Remove the steel backing plates from the rubber inserts.

NOTE: The backing plates are to be reused unless damaged.

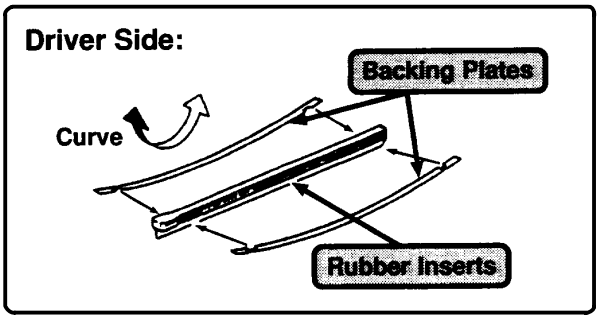

4. Install the backing plates on the new rubber inserts.

NOTE: The backing plates are slightly curved. Check and install the backing plates according to the illustration. Driver side and passenger side backing plates are oriented differently.

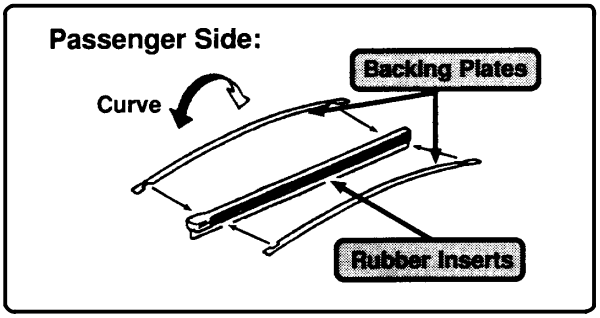

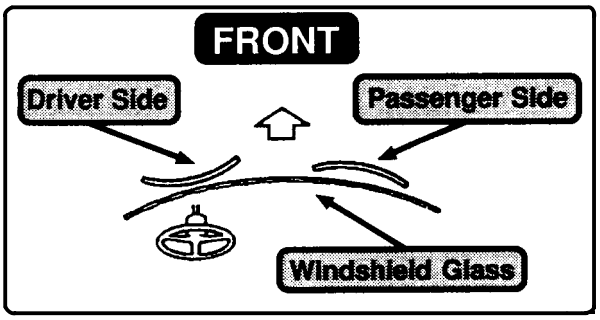

5. Install the rubber inserts, with the backing plates, onto the wiper frame.

6. Install the wiper frame on the wiper arm.

NOTE: Be sure to install the head (big end) of the insert toward the bottom as shown.

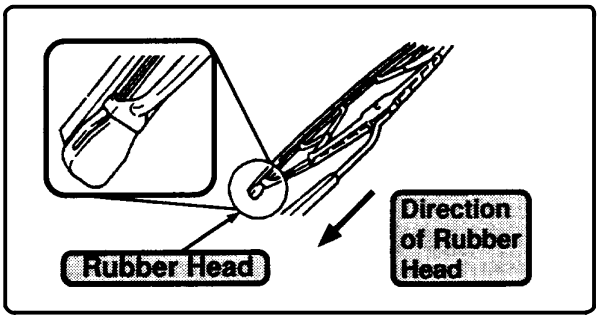

WARRANTY INFORMATION: *

OPCODE	DESCRIPTION	TIME	OPN	T1	T2
850091	R&R Front Wiper Blade (Rubber only, both sides)	0.2	85214-XXXXX	75	41

* 12 months or 12,500 miles from the date–of–first–use or demo date, whichever occurs first. Coverage is extended to 18 months or 24,000 miles in New York due to "Lemon Law" legislation.

Title:

CHILD RESTRAINT SEAT TOP STRAP BRACKET INSTALLATION

Models:

'90 – '00 All Models

Introduction

Child restraint seat top strap bracket installation procedures are provided to supplement the Owner's Manual. Beginning with 2001 models, the top strap brackets are factory installed.

NOTE:

- **The child restraint seat top strap assembly is not available as a service part. Contact the child restraint seat manufacturer for recommended top strap information, top strap to child restraint seat installation instructions, and top strap retailers.**
- **The top strap brackets can only be installed on vehicles that have nuts welded in place by the factory. The locations of these nuts can be found in the Owner's Manual (for most 1990 and newer models). Lexus does not recommend modifying vehicles that do not have nuts welded in place by the factory. All LX 450 and LX 470 vehicles, prior to 2001 model year, may not have these nuts welded in by the factory.**

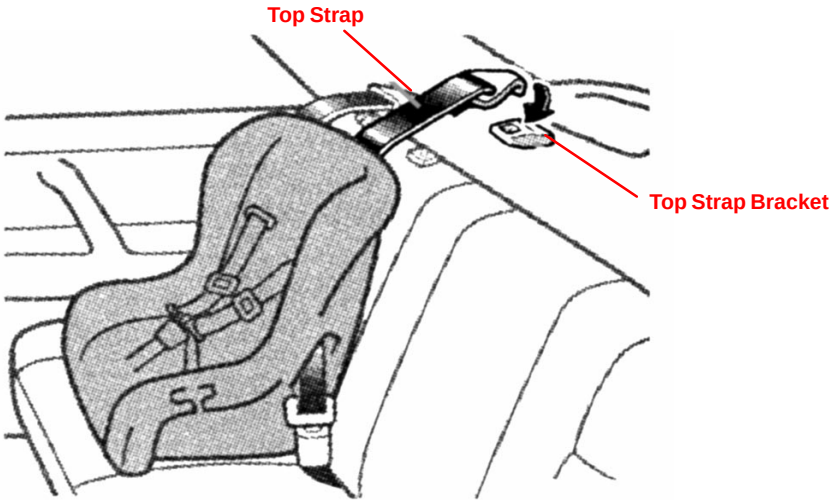

Applicable Vehicles

- **1990 – 2000** model year vehicles, **all models.**

Parts Information

PART NUMBER	PART NAME
73709–12010	Bracket Sub–Assembly (Bracket, Bolt, 10 mm Spacer, and Washers)
04731–22012	CRS Kit (two Bolts [15 mm, 30 mm], three Spacers [5 mm, 10 mm, 15 mm], and Locking Clip)

Warranty Information

OP CODE	DESCRIPTION	TIME	OFP	T1	T2
N/A	Not Applicable to Warranty	–	–	–	–

Installation Procedure

Child Restraint Seat Top Strap Bracket Installation

Obtain the exact year and vehicle model Lexus Owner's Manual before beginning installation.

1. Confirm with the customer which seat location(s) they will be installing the child restraint seat. The Owner's Manual seat section provides an illustration showing available top strap bracket location(s). The illustration page in the Owner's Manual is provided on page 4 of this bulletin.

NOTE:
Determine which kit parts are needed for each specific child seat location, by referring to page 4 of this bulletin.

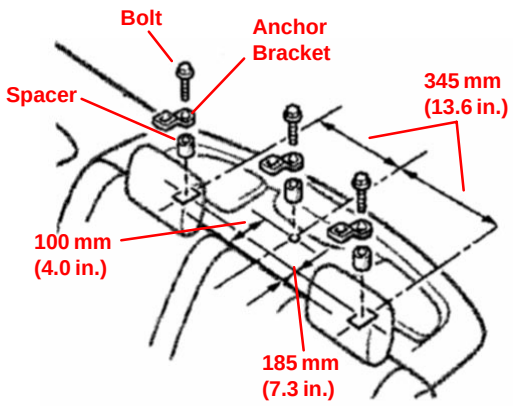

Example of 1999 ES 300 Showing Three (3) Available Bracket Locations

2. Remove a 20 mm diameter area of the carpet or trim material above the bracket mounting location. In some vehicles, a 20 mm circle is already pre–cut into the interior trim material. Once the interior trim material is removed, the nuts welded in by the factory should be visible.

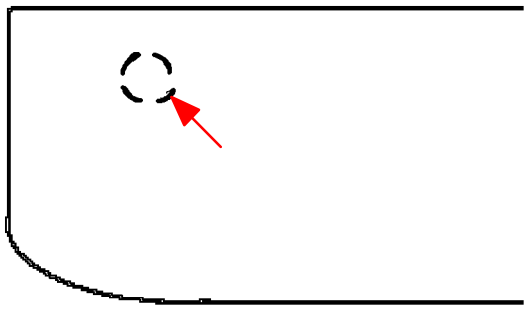
Example of Pre–Cut Circle in Package Tray Finisher

3. If a 5 mm or 15 mm spacer is specified, remove the red lock washer from the Bracket Sub–Assembly (P/N 73709–12010) and remove the 10 mm spacer. Assure the red lock washer is re–installed onto the bolt. If a 5 mm spacer is needed, use the 15 mm bolt from the CRS Kit (P/N 04731–22012).

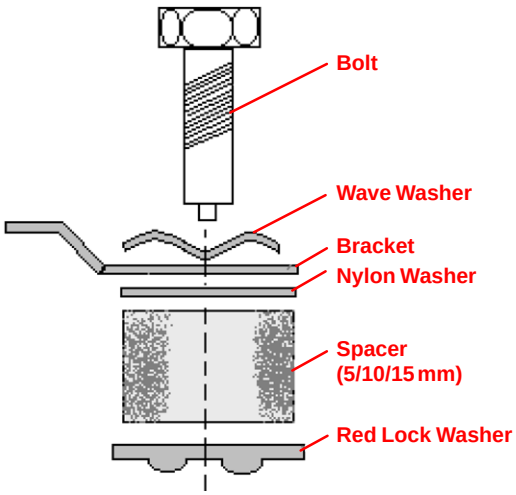

Installation Procedure (Continued)

4. Install the bracket assembly, according to the directions in the Owner's Manual. Tighten the bolt to 16.5 – 24.7 N–m, (1.68 – 2.52 kgf–m, 12.2 – 18.2 ft–lbf).
   - Assure the top strap is attached to the child seat, according to the child seat manufacturer's instructions.
   - Assure the child seat is installed in the vehicle according to the Lexus Owner's Manual (seat section).

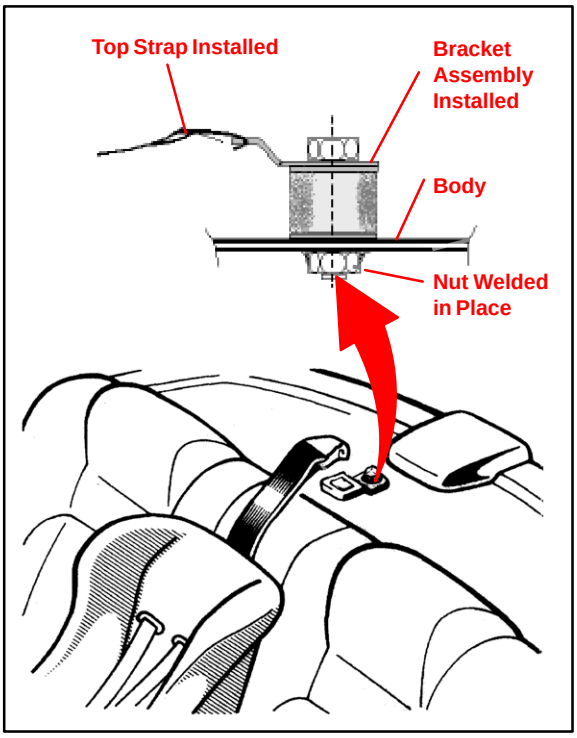

Installation Reference Information

Owner's Manual Installation Reference Information

Page 4 of this bulletin is a reference chart containing:

- Owner's Manual page(s) that provide the illustration showing available top strap bracket location(s). The information goes back to 1990 model year. 2001 models and newer already had the bracket installed by the factory.
- Installation notes, such as bracket spacer sizes for each specific child seat location.

EXAMPLE:

OWNER'S MANUAL	ES 300
1997	pg 89–90 a

This cell contains information on the 1997 ES300

Refer to this page in the Owner's Manual to find the illustration showing available top strap bracket locations.

Installation Note. In this case, all bracket positions on the 1997 ES 300 will require a 15 mm spacer.

INSTALLATION NOTE	COMMENT
a	Spacer – 15 mm for all anchors
b	Spacer – 10 mm for outer, 15 mm for center
c	Spacer – 15 mm for outer, 10 mm for center
d	Spacer – 5 mm for all anchors
N/A	Top strap anchor bracket mounting not available
Standard	No installation necessary, anchor already installed by factory

Installation Reference Information (Continued)

OWNER'S MANUAL	LS 400	ES 300	ES 250	SC 400	SC 300
2000	pg 117–118 Standard	pg 114–115 Standard		N/A	N/A
1999	pg 112–114 a	pg 105–106 a		N/A	N/A
1998	pg 111–113 a	pg 99–100 a		N/A	N/A
1997	pg 98–100 a	pg 89–90 a		pg 91–92 a	pg 91–92 a
1996	pg 79–82 a	pg 67–68 c		pg 72–73 a	pg 72–73 a
1995	pg 77–80 a	pg 67–68 c		pg 70–71 a	pg 70–71 a
1994	pg 74–75 b	pg 68–69 c		pg 67–68 a	pg 67–68 a
1993	pg 74–75 b	pg 60–61 c		pg 67–68 a	pg 67–68 a
1992	pg 62 b	pg 61–62 c		pg 61–62 a	pg 61–62 a
1991	pg 61–62 b		pg 59–60 a		
1990	pg 61 b		pg 55–56 a		

OWNER'S MANUAL	GS 400	GS 300	LX 470	LX 450	RX 300
2000	pg 112–113 Standard	pg 112–113 Standard	N/A		pg 126–127 d
1999	pg 108–109 a	pg 108–109 a	N/A		pg 123–124 d*
1998	pg 107–108 a	pg 107–108 a	N/A		
1997		pg 97–98 a		N/A	
1996		pg 70–72 a		N/A	
1995		pg 69–70 a			
1994		pg 69–70 a			
1993		pg 69–70 a			
1992					
1991					
1990					

* 1999 RX 300 Owner's Manual OM48403U refer to pages 126–127.

LEXUS

Technical Service Information Bulletin

March 23, 2001

Title:

NEW SEAT BELT TONGUE PLATE STOPPER SERVICE PARTS

Models:

All Applicable Models

TSIB

BODY

BO005-01

Introduction

A new service part for seat belt tongue plate stoppers has been introduced. Installation procedures are provided to supplement the Repair Manual.

Applicable Vehicles

MODEL	YEAR
LS 400	1990 – 2001
ES 250	1990 – 1991
ES 300	1992 – 2001
SC 400	1992 – 2001
SC 300	1992 – 2001
GS 400	1993 – 2001
GS 300	1993 – 2001
LX 450	1996 – 1998
LX 470	1998 – 2001
RX 300	2000 – 2001

Parts Information

PREVIOUS PART NUMBER	CURRENT PART NUMBER	PART NAME
N/A	73219–02010	Stopper, Tongue Plate (Black)*
N/A	73219–02020	Stopper, Tongue Plate (Gray)*
N/A	73219–02030	Stopper, Tongue Plate (Beige)*

* Use a stopper color that is closest to the seat belt webbing color.

Warranty Information

OP CODE	DESCRIPTION	TIME	OPN	T1	T2
BD0046	Install Seat Belt Tongue Plate Stopper	0.1	73219–020#0	62	12

Applicable Warranty*:

This repair is covered under the Lexus Comprehensive Warranty. This warranty is in effect for 48 months or 50,000 miles, whichever occurs first, from the vehicle's in–service date.

* Warranty application is limited to correction of a problem based upon a customer's specific complaint.

Installation Procedure

1. Preparation

A. Shift the Tongue Plate to the upper portion of the Tongue Plate Stopper, and temporarily hold it with a clip or tape.

B. Remove any pieces of the original Tongue Plate Stopper in the webbing with a pair of pliers.

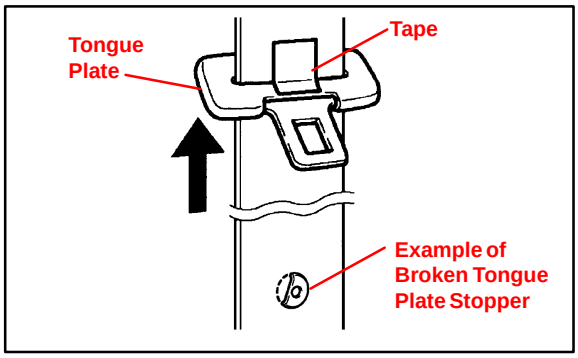

CAUTION:

Damaged or weakened seat belts may break in an accident and injure the occupant. The seat belt assembly must be replaced if:

- **The webbing is cut, frayed, worn, or damaged.**
- **It has been used in a severe impact.**

Inspect the entire length of webbing for damage and replace the assembly if needed. Be careful not to damage the webbing during repair.

2. Install the Tongue Plate Stopper

A. Install a new Tongue Plate Stopper in the hole of the webbing.

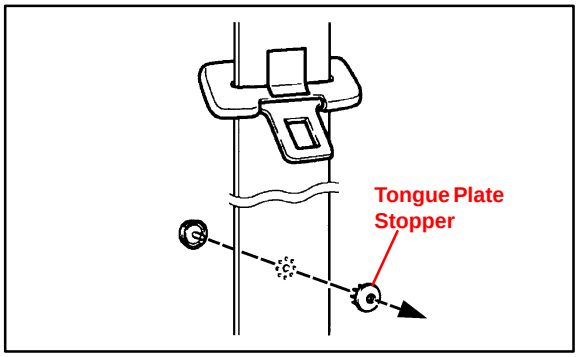

NOTE:

Be aware of the installation direction of the Tongue Plate Stopper as shown in the illustration.

B. Pinch the Tongue Plate Stopper into the webbing using an adjustable wrench, and turn and push the adjustment screw by hand.

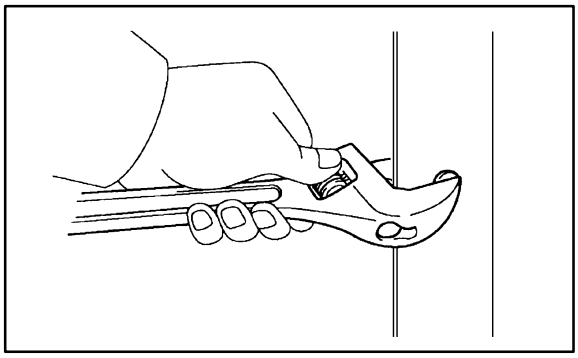

HINT:

Press the adjustment screw in order to position the male and female parts of the Tongue Plate Stopper parallel to each other, as shown in illustration.

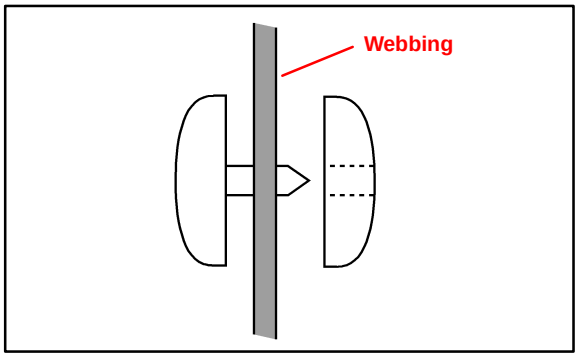

CAUTION:

DO NOT use pliers. They may damage the webbing.

Installation Procedure (Continued)

C. When the adjustment screw for the adjustable wrench can't be turned by hand, tighten the adjustment screw using a pair of adjustable joint pliers until the space between jaws of the adjustable wrench is 4.5 – 5.0 mm. (See illustrations.)

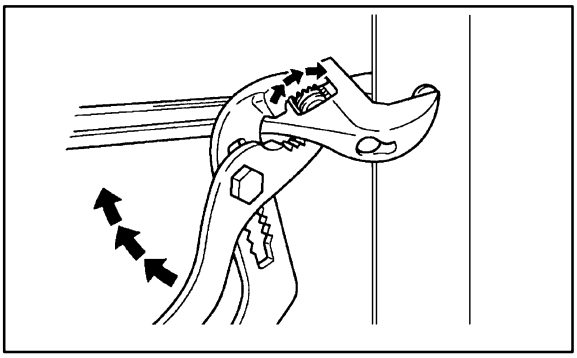

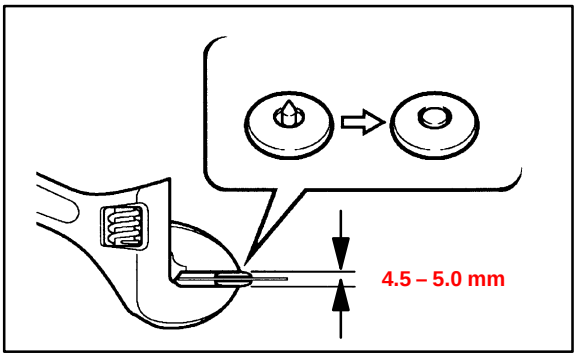

D. Check to be sure that the male pin of the Tongue Plate Stopper has become deformed evenly in the hole of the female part and is firmly held to the belt webbing. (See illustrations.)

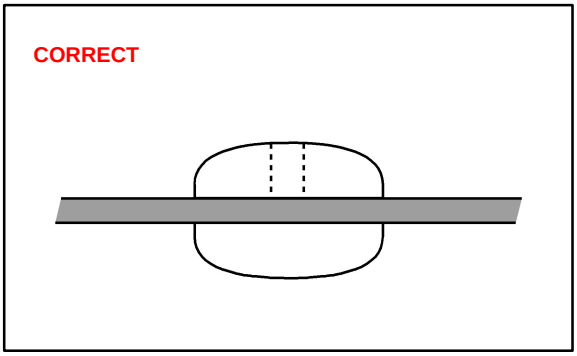

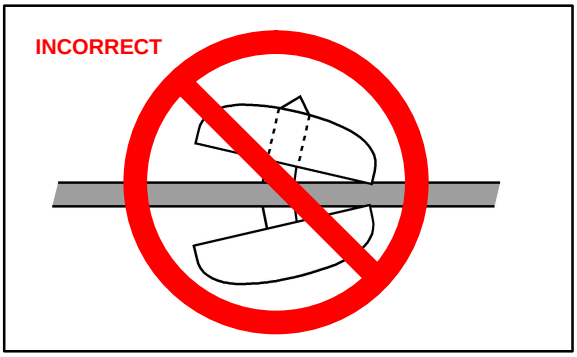

Title **SEAT BELT EXTENDER**

Lexus customers who find it necessary to increase the length of their seat belts may now obtain Seat Belt Extenders at no cost through their local Lexus dealer.

The extender is available in black only and in lengths of 6”, 9”, 12”, 15” and 18”.

Owner’s are informed of the seat belt extender availability through the Lexus Owner’s Manual included in each vehicle (see page 6 for text of Owner’s Manual).

The user must visit a Lexus Dealership to have the required measurements made and complete the seat belt extender worksheet. The worksheet will allow the proper fitting and selection of a seat belt extender for the customer. The dealer should then determine the part number needed and place a Critical Order for the item through the TDN Parts Network.

Attached for your information are the following 1996 model year updated guides and examples:

- Flow chart (Page 2)
- Seat belt extender application/part number chart (Pages 3 & 4)
- Owner instruction sheet (Page 4)
- Statement included in Owner’s Manual (Page 6)
- Seat Belt Extender Worksheet (Page 7)

The dealership service department should complete the affixed Seat Belt Extender Label and review the “owner instruction sheet” with the owner. The dealer should give a copy of the completed worksheet to the owner and keep the original in the customer’s file.

To assure utmost owner satisfaction, it is recommended that a dealer designate one person to coordinate all activities related to the seat belt extender issue.

Due to past sales history, it is recommended that dealers **DO NOT** stock seat belt extenders due to low demand for the parts and the need for custom fitting.

SEAT BELT EXTENDER (SBE) FLOW CHART:

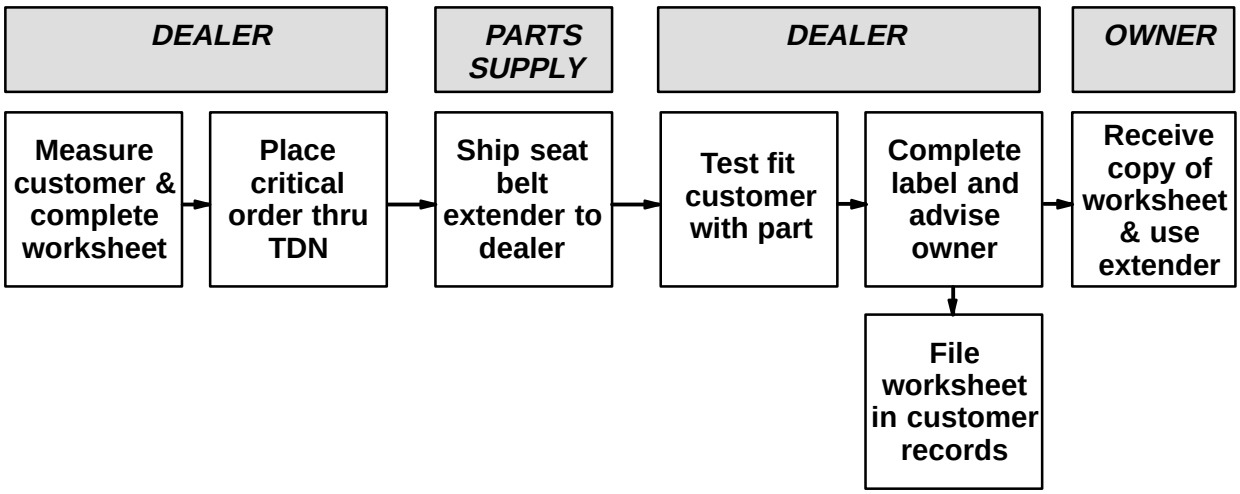

SEAT BELT LABEL

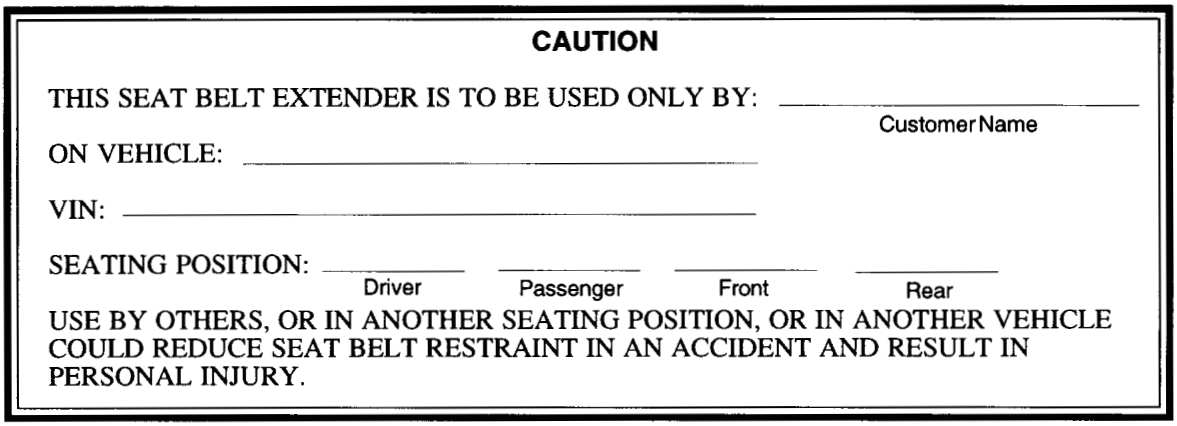

CAUTION

THIS SEAT BELT EXTENDER IS TO BE USED ONLY BY: _____
Customer Name

ON VEHICLE: _____

VIN: _____

SEATING POSITION: _____ Driver _____ Passenger _____ Front _____ Rear

USE BY OTHERS, OR IN ANOTHER SEATING POSITION, OR IN ANOTHER VEHICLE COULD REDUCE SEAT BELT RESTRAINT IN AN ACCIDENT AND RESULT IN PERSONAL INJURY.

(1) Owner requests a seat belt extender from the dealer.

(2) Dealer verifies need for a seat belt extender, obtains current copy of TSIB and copies the worksheet.

(3) Dealer measures the customer and completes the worksheet. Dealer determines the correct part number needed and places a Critical Order for the part through the TDN Parts Network.

(4) Dealer receives seat belt extender and calls customer in to check fit of part.

(5) If seat belt extender fit is OK, dealer completes the customer information label on the part, explains usage of the part and gives the customer a copy of the completed worksheet.

(6) Dealer places a copy of the completed worksheet in the customer’s records.

To determine the part number, locate the “series” on the following charts. Then refer to the chart on page 4 to locate the part number for the “series” and length.

FRONT SEAT EXTENDER APPLICATION TABLE (EXTENDER SERIES NUMBER)

MODEL	1996	1995	1994	1993	1992	1991	1990
LS 400	R-3	R-3	R-3	R-3	R-3	R-3	R-3
GS 300	N-3	N-3	N-3	N-3			
SC 400	R-3	R-3	R-3	R-3	R-3		
SC 300	R-3	R-3	R-3	R-3	R-3		
ES 300	K-4	K-4	K-4	K-4	K-4		
ES 250						K-3	K-3
LX 450	R-3						

REAR SEAT EXTENDER APPLICATION TABLE (EXTENDER SERIES NUMBER)

MODEL	1996	1995	1994	1993	1992	1991	1990
LS 400	R-3	R-3	R-3	R-3	R-3	R-3	R-3
GS 300	K-4	K-4	K-4	K-4			
SC 400	R-3	R-3	R-3	R-3	R-3		
SC 300	R-3	R-3	R-3	R-3	R-3		
ES 300	R-3	R-3	R-3	R-3	R-3		
ES 250						R-1	R-1
LX 450	K-4*						

* Includes 3rd Seat Application.

Note: Seat belt extenders must not be used for the center rear seat belt on all models.

PART NUMBER INFORMATION:

(73399–_____)

LENGTH					
SERIES	**6”**	**9”**	**12”**	**15”**	**18”**
K–3	–22060	–22070	–22080	–22090	–22100
K–4	–33010	–33020	–33030	–33040	–33050
N–3	–20011	–20021	–20031	–20041	–20051
R–1	–12010	–12020	–12030	–12040	–12050
R–3	–50010	–50020	–50030	–50040	–50050

OWNER INSTRUCTION
(FOR PERSONALIZED SEAT BELT EXTENDER)

Precaution when using the seat belt extenders:

1. Never use the seat belt extender if you can fasten the seat belt without it.

2. Remember that the seat belt extender provided for you may not be safe when used on a different vehicle, or for another person and/or at a different seating position than specified.

3. When the seat belt extender is provided for a rear seat position (with automatic locking retractor), make sure the retractor is locked when in use.

4. FAILURE TO FOLLOW THESE INSTRUCTIONS COULD RESULT IN A LESS EFFECTIVE SEAT BELT RESTRAINT SYSTEM IN CASE OF A VEHICLE ACCIDENT, CAUSING PERSONAL INJURY.

Using The Seat Belt Extender:

1. Connect the seat belt extender to the seat belt by inserting the tab into the seat belt buckle so that the buckle–release buttons of the seat belt extender and the seat belt are located on the same side as shown. You will hear a click when the tab properly locks into the buckle.

2. MAKE SURE THAT THE CONNECTION IS SECURE AND THE SEAT BELT EXTENDER IS NOT TWISTED.

3. When releasing the seat belt, press on the buckle–release button on the seat belt extender, not on the seat belt. This helps prevent damage to the vehicle interior and seat belt extender itself.

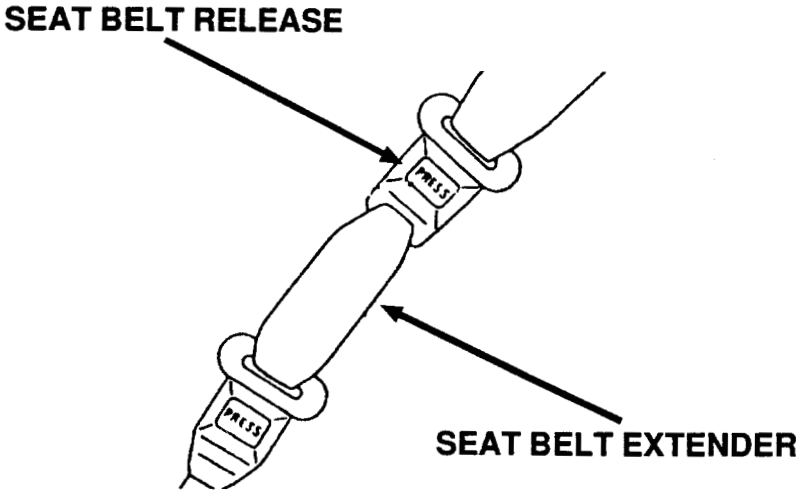

4. When not in use, remove the extender and store in the vehicle for future use.

OWNER'S MANUAL TEXT:

SEAT BELT EXTENDER

If your seat belt cannot be fastened securely because it is not long enough, a personalized seat belt extender is available from your Lexus dealer free of charge.

Please contact your local Lexus dealer so that the dealer can order a seat belt extender of the proper required length. Bring the heaviest coat you expect to wear for proper measurement and selection of length. Additional ordering information is available at your Lexus dealer.

CAUTION:

When using the seat belt extender, observe the following. Failure to follow these instructions could result in less effectiveness of the seat belt restraint system in case of a vehicle accident, increasing the chance of personal injury.

- Never use the seat belt extender if you can fasten the seat belt without it.
- Remember that the seat belt extender provided for you may not be safe when used on a different vehicle, or for another person and/or at different seating positions than specified.

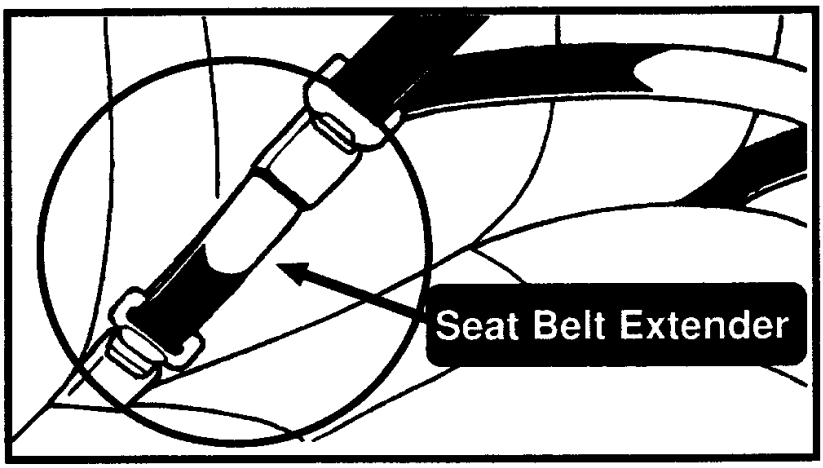

To connect the seat belt extender to the seat belt, insert the tab into the seat belt buckle so that the buckle release buttons of the seat belt extender and the seat belt are both facing outward as shown.

You will hear a click when the tab locks into the buckle. When releasing the seat belt, press on the buckle–release button on the seat belt extender, not on the seat belt. This helps prevent damage to the vehicle interior and seat belt extender itself.

When not in use, remove the seat belt extender and store in the vehicle for future use.

CAUTION:

After inserting the tab, make sure that the connection is secure and the seat belt extender is not twisted.

SEAT BELT EXTENDER WORKSHEET

Please copy this original worksheet for each extender needed.

CAUTION: To minimize the chance and/or severity of injury in an accident, the seat belt extender must not be used:

- By anyone but the person for whom it was provided, and
- In any vehicle or seat specified other than the one for which it was provided, and
- With any car child safety seats.

When the seat belt extender is provided for rear seat positions (with automatic locking retractor), make sure the retractor is locked when in use.

In all cases seat belts must be worn below the abdomen by pregnant women.

DEALER			PLEASE PRINT CLEARLY	APPLICANT		
DEALER CODE	DEALER NAME			APPLICANT NAME		
ADDRESS				ADDRESS		
CITY AND STATE		ZIP CODE		CITY AND STATE	ZIP CODE	TELEPHONE
DEALER EMPLOYEE NAME	MODEL YEAR	BODY TYPE		SEAT POSITION F / R	VEHICLE IDENTIFICATION NUMBER	

DIRECTIONS FOR DETERMINING PROPER EXTENDER LENGTH

1. Place the seat in the position the person normally uses.
2. With the person in the seat, extend the seat belt as much as possible and see if the belt latches.
3. If the buckle latches but has no slack remaining, the dimension for Figure 2 is zero. If the seat belt does not latch, measure the distance from the seat belt latch edge to the seat belt buckle as shown in Figure 2 below, and note the dimension.
4. Measure the lap area directly below the navel to the edge of the buckle as shown in Figure 1 and note the dimension.
5. The difference between Figure 1 and Figure 2 measurements is the "Allowable Margin". (Do not use this dimension for the extender length.)
6. Take the measurement in Figure 2 and round it up to the next extender size available, without exceeding the "Allowable Margin".

FIGURE 1
DIMENSION FROM NAVEL TO BUCKLE

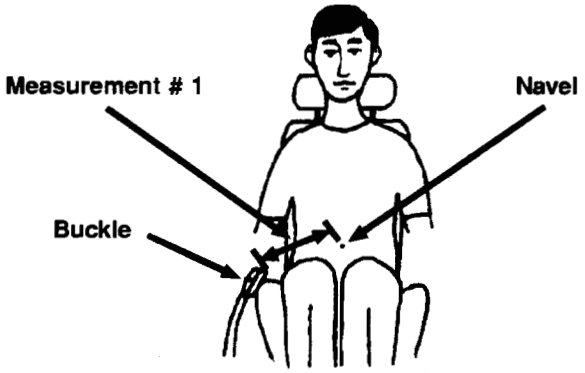

FIGURE 2
DIMENSION FROM LATCH TO BUCKLE

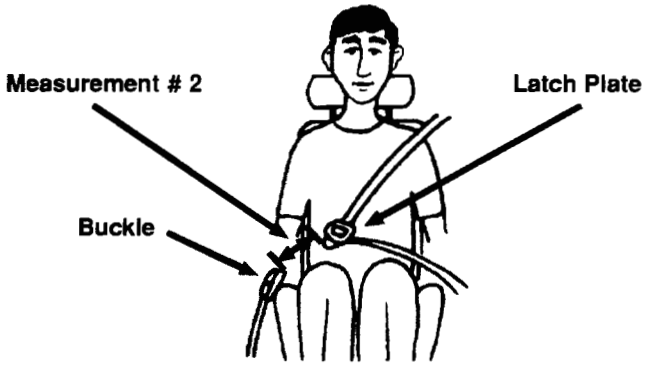

Measurement #1 (Figure 1) - Measurement #2 (Figure 2) = "Allowable Margin"

_____ - _____ = _____

NOTE: The length of the extender must not exceed the "Allowable Margin", due to design and construction features

AUTHORIZATION

The same extender can be used for right and left seating applications. Each seat belt extender will be affixed with a label identifying the owner, vehicle VIN and seating position. Extenders are available in one color only.

_____ APPLICANT'S SIGNATURE (Actual user of seat belt extender)

_____ DATE

Title:

SEAT BELT EXTENDERS

Models:

All '94 through '98 models

Introduction

Lexus customers who find it necessary to increase the length of their sear belts may obtain Seat Belt Extenders at **no cost** through their local Lexus dealer.

- The extender is available in 6 inch, 9 inch, 12 inch, 15 inch and 18 inch lengths.
- The extender is available **only in black**.
- Owners are informed of the seat belt extender availability through the Lexus Owner's Manual included in each vehicle.

The customer (*individual requiring the extender*) must visit a Lexus dealership to have the required measurements made and to compete the seat belt extender worksheet. The worksheet will allow the proper fitting and selection of a seat belt extender for the customer. The dealership personnel should then determine the applicable part number and place a **Critical Order** through the ***TDN Parts Network***.

The dealership service department should compete the affixed Seat Belt Extender Label and review the "owner instruction sheet" with the customer. The dealership should give a copy of the completed worksheet to the customer and keep the original in the customer's file.

To assure utmost owner satisfaction, it is recommended that a dealership designate one person to coordinate all activities related to the seat belt extender issue.

From past sales history, it is recommended that dealerships **do not stock** Seat belt extenders due to low demand and the need for customer fitting.

This bulletin contains the following information:

Procedure and Flow Chart . . . . . Page 2
Application Chart and Notes . . . . . Page 3
Part Number Information . . . . . Page 3
Owner Instructions . . . . . Page 4
Seat Belt Extender Worksheet . . . . . Page 5

Affected Vehicles

- All **Lexus** models, **1994** through **1998** model years.

Warranty Information

OPCODE	DESCRIPTION	TIME	OPN	T1	T2
N/A	Not applicable to warranty	–	–	–	–

Procedure

1. Owner requests a seat belt extender from dealer.

2. Dealer verifies the need for a seat belt extender and obtains a current copy of this TSB and copies the worksheet.

3. Dealer measures the customer and completes the worksheet. Dealer determines the correct part number and places a Critical Order for the part through the TDN Parts Network.

4. Dealer receives seat belt extender and calls the customer in to check fit of the part.

5. If the seat belt extender fit is good, dealership personnel completes the customer information label on the part, explains usage of the part, and gives the customer a copy of the completed worksheet.

6. Dealer places a copy of the completed worksheet in the customer's records.

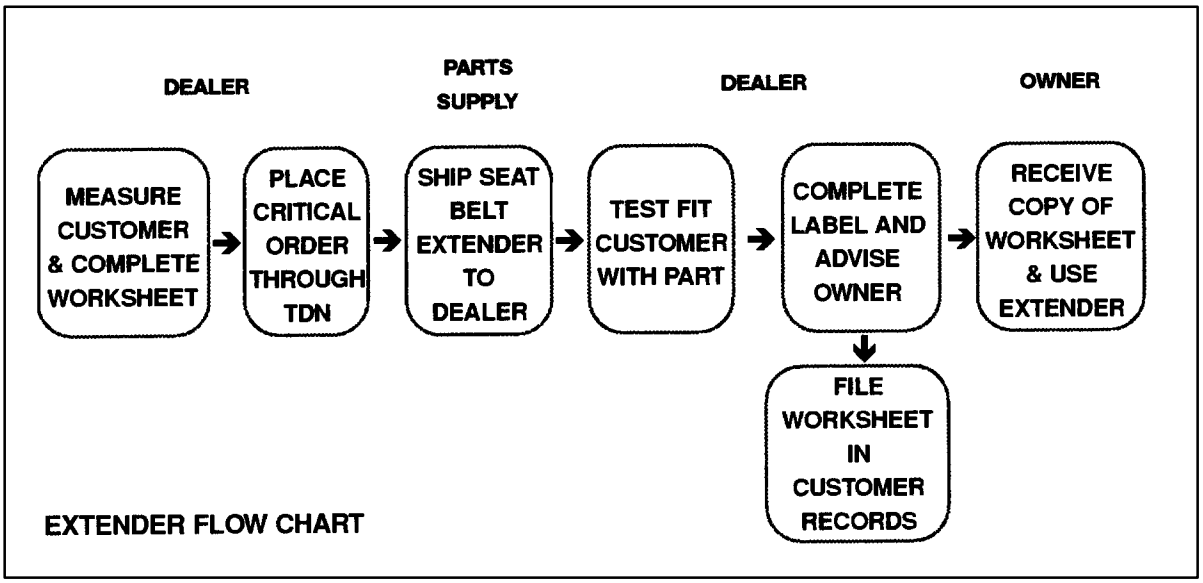

Sample Seat Belt Extender Label

CAUTION

THIS SEAT BELT EXTENDER IS TO BE USED ONLY BY: _____

ON VEHICLE: _____

VIN: _____

SEATING POSITION: _____ _____ _____ _____

Driver Passenger Front Rear

USE BY OTHERS, OR IN ANOTHER SEATING POSITION, OR IN ANOTHER VEHICLE COULD REDUCE SEAT BELT RESTRAINT IN AN ACCIDENT AND RESULT IN PERSONAL INJURY.

Front Seat Belt Extender Applications

FRONT SEAT - EXTENDER APPLICATION					
MODEL	**'98**	**'97**	**'96**	**'95**	**'94**
LS 400	R–3	R–3	R–3	R–3	R–3
GS 400	R–5	N/A	N/A	N/A	N/A
GS 300	R–5	N–3	N–3	N–3	N–3
SC 400	R–3	R–3	R–3	R–3	R–3
SC 300	R–3	R–3	R–3	R–3	R–3
ES 300	R–5	R–5	K–4	K–4	K–4
LX 450	N/A	R–3	R–3	N/A	N/A

Rear Seat Belt Extender Applications

REAR SEAT - EXTENDER APPLICATION					
MODEL	**'98**	**'97**	**'96**	**'95**	**'94**
LS 400	R–3	R–3	R–3	R–3	R–3
GS 400	K–5	N/A	N/A	N/A	N/A
GS 300		K–4	K–4	K–4	K–4
SC 400	R–3	R–3	R–3	R–3	R–3
SC 300					
ES 300 (Right & Left)	R–5	R–5	R–3	R–3	R–3
ES 300 (Center)	R–3	R–3*	N/A	N/A	N/A
LX 450	N/A	K–4**	K–4**	N/A	N/A

NOTE:

* **The extender must NOT be used for the center rear seat belt (except on '97 and '98 model ES 300s as noted in the chart).**

** **Includes third seat application.**

Parts Information

PART NUMBER PREFIX: 73399-					
SERIES			**LENGTH**		
	6 INCH	**9 INCH**	**12 INCH**	**15 INCH**	**18 INCH**
K–4	–33010	–33020	–33030	–33040	–33050
K–5	–35010	–35020	–35030	–35040	–35050
N–3	–20011	–20021	–20031	–20041	–20051
R–3	–50010	–50020	–50030	–50040	–50050
R–5	–16060	–16070	–16080	–16090	–16100

Owner Instructions

Failure to follow the recommendations indicated below could result in less effectiveness of the seat belt restraint system in case of vehicle collision, causing personal injury.

The seat belt extender must not be used:

a. By anyone other than for whom it was provided (name recorded on seat belt extender).

b. In any vehicle and/or seat position other than the one for which it was provided.

c. When the seat belt extender is provided for rear seat positions (with automatic locking retractor), make sure the retractor is locked when is use.

If your seat belt cannot be fastened securely because it is not long enough, a personalized seat belt extender is available from your Lexus dealer free of charge.

Please contact your local Lexus dealer so that the dealer can order the proper required length for the extender. Bring the heaviest coat you expect to wear for proper measurement and selection of length. Additional ordering information is available at your Lexus dealer.

CAUTION:

When using the seat belt extender, observe the following. Failure to follow these instructions could result in less effectiveness of the seat belt restraint system in case of vehicle accident, increasing the chance of personal injury.

- **Never use the seat belt extender if you can COMFORTABLY fasten the seat belt without it.**
- **Remember that the extender provided for you may not be safe when used on a different vehicle, or for another person or at a different seating position than the one originally intended for.**

To connect the extender to the seat belt, insert the tab into the seat belt buckle so that the "PRESS" signs on the buckle–release buttons of the extender and the seat belt are both facing outward as shown.

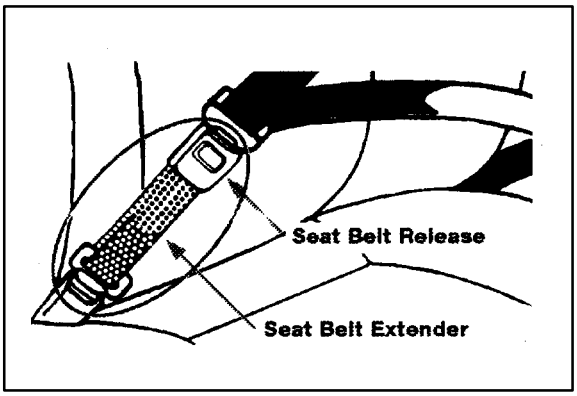

You will hear a click when the tab locks into the buckle.

When releasing the seat belt, press on the buckle–release button on the extender, not on the seat belt. This helps prevent damage to the vehicle interior and extender itself.

When not in use, remove the extender and store in the vehicle for future use.

SEAT BELT EXTENDER WORKSHEET

PLEASE COPY THIS ORIGINAL WORKSHEET FOR EACH EXTENDER NEEDED

CAUTIONS:

- **To minimize the chance and/or severity of injury in an accident, the seat belt extender must only be used:**
  1. **By the person for whom it was provided**
  2. **In the seat position for which it was provided**
- **The seat belt extender must never be used with any child safety seats.**
- **When the seat belt extender is provided for rear seat positions (with automatic locking retractor), make su th retractor is locked when extender belt is in use.**

DEALER			SEAT BELT EXTENDER APPLICATION			APPLICANT	
DEALER CODE	DEALER NAME			APPLICANT NAME			
ADDRESS				ADDRESS			
CITY & STATE		ZIP		CITY & STATE		ZIP	PHONE
EMPLOYEE NAME	MODEL YEAR	BODY TYPE		SEATING POSITION	VEHICLE IDENTIFICATION		

DIRECTIONS FOR DETERMINING PROPER EXTENDER LENGTH

1. **Place the seat in the position the applicant normally uses**
2. **With applicant in the seat, wearing thickest coat expected to be worn, pull belt all the way out and try to buckle belt**
   - **If the belt latches into buckle and feels comfortable against upper chest area, an extender is not needed**
   - **If belt does not buckle continue with step 3**
   - **If buckle latches but belt has no slack remaining, continue with step 3**
3. **Measure distance between applicant's navel and seat belt buckle (dimension A) and enter on worksheet**
4. **With belt all the way out, measure distance between latch tip and buckle tip (dimension B) and enter on worksheet**
   NOTE: If belt latches but there is no slack enter zero as dimension B
5. **Subtract dimension B from dimension A and record number in check number box on worksheet**
6. **Seat belt extender length is dimension B rounded up to next extender length (without exceeding check number)**
   NOTE: If extender length exceeds check number, an extender can not be provided to the customer

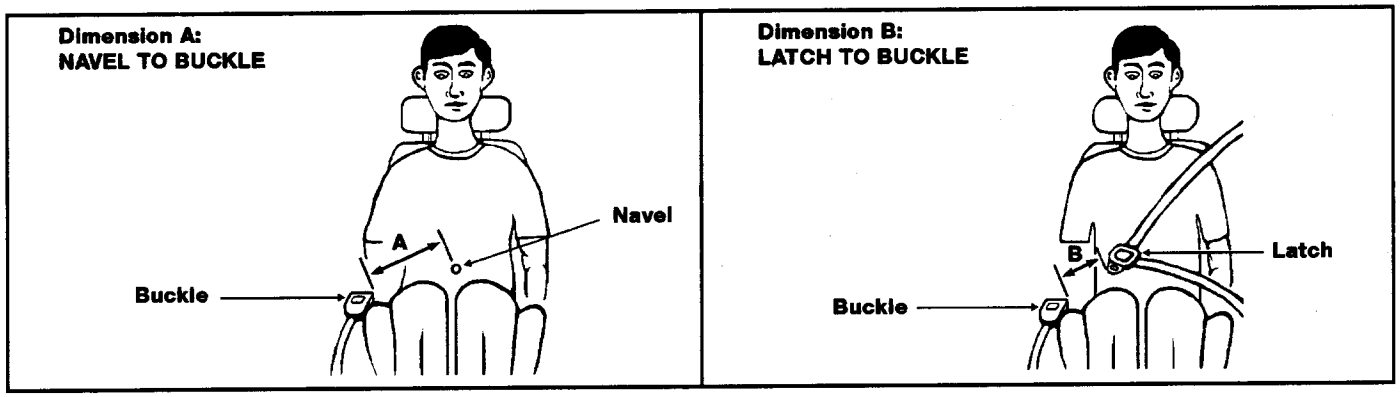

SEAT BELT EXTENDER CALCULATION		
DIMENSION A:	DIMENSION B:	CHECK NUMBER:

SEAT BELT EXTENDER AUTHORIZATION

- ***The same seat belt extender can be used for right and left seating applications.*** **Each seat belt extender will have a label identifying the owner, VIN and seating position. Seat belt extenders are available only in black.**
- **Applicant's Signature:**_____ **Date:**
  (Actual user of seat belt extender)

LEXUS

Technical Service Information Bulletin

September 12, 2003

Title:

TRIM GARNISH LOOSE

Models:

All Models

TSIB

BODY

BO007-03

Introduction

Customers may experience an interior trim panel either loose or fitting poorly due to a deformed or missing clip. When a trim garnish (A, B, C or D pillar garnishes, door trim panel, etc.) is removed and reinstalled using the old clips, it may cause the garnish to exhibit a loose condition. To prevent this condition from occurring, ensure that new clips are utilized for all attachment points every time a garnish is reinstalled. When installing new parts, use either the new clips supplied with the part, or order new clips. Refer to the parts catalog for specific part numbers.

Applicable Vehicles

- **All models.**

Warranty Information

OP CODE	DESCRIPTION	TIME	OFP	T1	T2
N/A	Not Applicable to Warranty	–	–	–	–

Title:
SHOULDER BELT ANCHOR TAPE SET

Models:
All Applicable ES 300, IS 300, LX 450, LX 470 & RX 300

Introduction

To assist customers in preventing particle buildup and preserve the appearance of the shoulder belt anchor, the following procedure has been developed.

Applicable Vehicles

- **1997 – 2001** model year **ES 300** vehicles.
- **2000 – 2001** model year **IS 300** vehicles.
- **1996 – 1997** model year **LX 450** vehicles.
- **1998 – 2001** model year **LX 470** vehicles.
- **1999 – 2001** model year **RX 300** vehicles.

Parts Information

CURRENT PART NUMBER	PART NAME
73205–48011	Tape Set, Shoulder Belt Anchor

NOTE:
The above tape set contains the fluorocarbon resin tape (2 pieces) and Velcro tape (1 piece).

Warranty Information

OP CODE	DESCRIPTION	TIME	OPN	T1	T2
BD1011	Clean the Shoulder Belt Anchor	0.3	73210–#####–##*1 73220–#####–##*1	61	99

*1 OPN should be part number of whichever belt assembly that the procedure is performed on.

Applicable Warranty*:
This repair is covered under the Lexus Comprehensive Warranty. This warranty is in effect for 48 months or 50,000 miles, whichever occurs first, from the vehicle's in-service date.

* Warranty application is limited to correction of a problem based upon a customer's specific complaint.

Installation Procedure

1. CLEAN SHOULDER BELT ANCHOR

NOTE:
- **Do not install the tape when the vehicle temperature is below the freezing point.**
- **Do not re–use removed fluorocarbon resin tape.**

A. Pull out the seat belt about 300 mm and attach a clip as shown in the illustration.

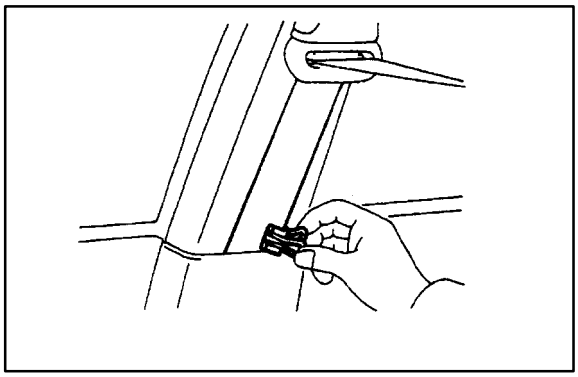

HINT:
Preventing the seat belt from retraction with a clip will make the following work easier.

B. Put the Velcro tape (in the parts kit) through the hole of the shoulder belt anchor, brush–shaped side to the anchor.

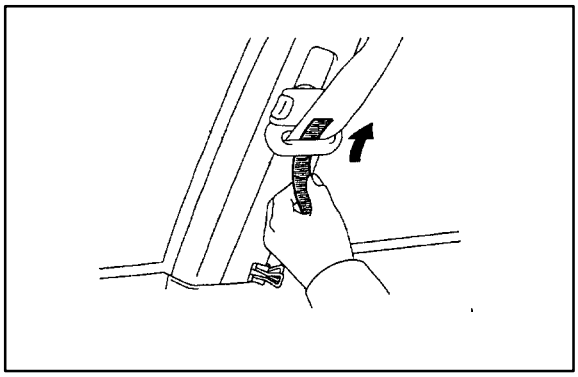

C. Pull both ends of the Velcro tape with your hand and shave off the dirt on the shoulder belt anchor by moving the Velcro tape several times as shown in the illustration.

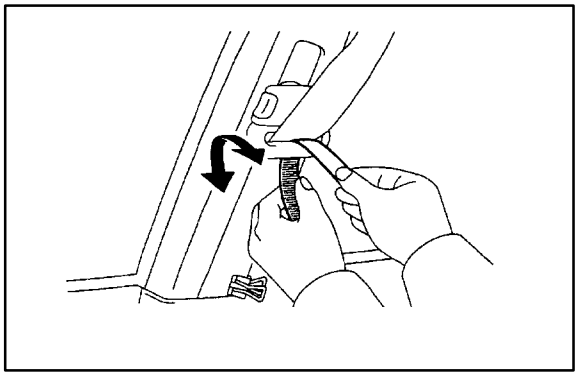

NOTE:
Remove the dirt completely. Otherwise, the fluorocarbon resin tape may not adhere properly.

Installation Procedure (Continued)

2. INSTALL FLUOROCARBON RESIN TAPE

A. Place the fluorocarbon resin tape onto the seat belt as shown in the illustration.

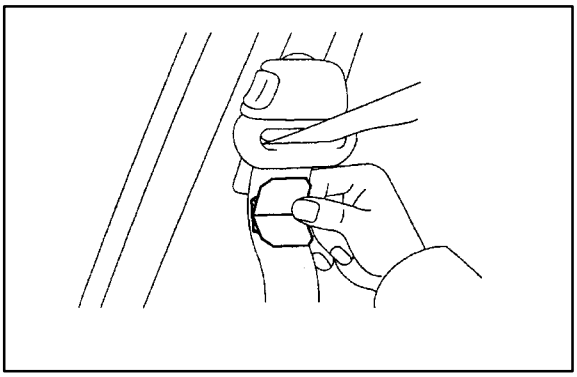

NOTE:

Before installation of the fluorocarbon resin tape, it is necessary to pre–release the colored film about 5 mm for each side. (Not fully released.)

B. By pulling up the seat belt, put the fluorocarbon resin tape through the hole of the shoulder belt anchor. Match the shoulder belt anchor to the center of the tape.

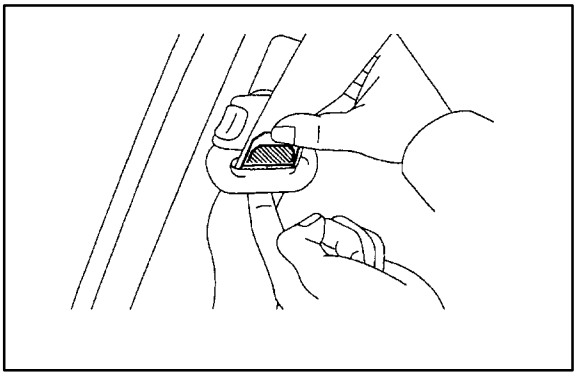

C. Remove the upper side colored film from the fluorocarbon resin tape, and securely affix the tape to the outside of the shoulder belt anchor.

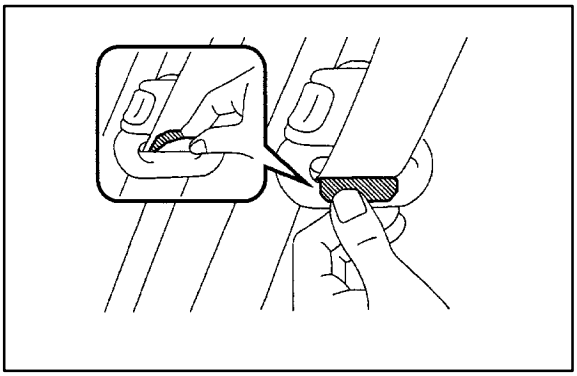

D. Remove the lower side colored film from the fluorocarbon resin tape, and securely affix the tape to the outside of the shoulder belt anchor.

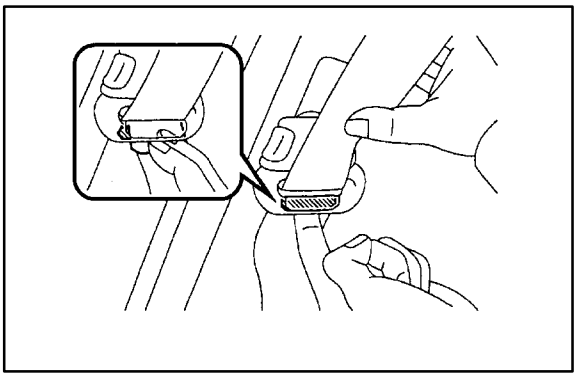

NOTE:

- **Be sure to affix the fluorocarbon tape securely along all edges.**
- **Pay attention not to make any wrinkles or slack in the fluorocarbon resin tape.**

E. Remove the clip.

Installation Procedure (Continued)

F. By pulling the seat belt up and down several times, as shown in the illustration, securely affix the fluorocarbon resin tape and confirm the smoothness of the belt movement.

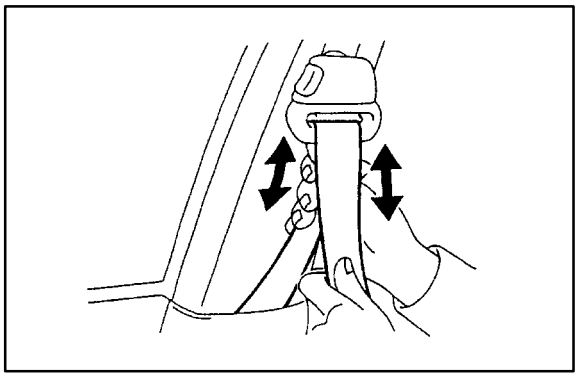

NOTE:
Affix the fluorocarbon resin tape on the shoulder belt anchor to the other side following the same procedure.

NOTE:
If the seat belt requires cleaning to remove dirt, only use a neutral detergent or lukewarm water to clean. Use the seat belt after it is completely dried, to confirm proper operation.

Title:

LX 450 BRAKE PAD CHANGE

Models:

'97 LX 450

Introduction A new brake pad has been introduced on the 1997 LX 450.

Production Change Information

- **1997 LX 450** starting VIN **JT6HJ88J3V0150887.**

Parts Information

PREVIOUS PART NUMBER	NEW PART NAME	PART NAME
04465-60020	04465-60110	Pad Kit, Disc Brake Front

Warranty Information

OPCODE	DESCRIPTION	TIME	OPN	T1	T2
473301	Front disc brake pad and/or shim R&R (both sides)	1.5	04465-60020	99	19

* Warrantable only for 12 months or 12,500 miles from the date-of-first-use or demo date, whichever occurs first. Coverage is extended to 24 months or 18,000 miles, whichever occurs first, in the state of New York due to the "Lemon Law" legislation.

NOTE:
Replacement of the front brake pad (pad only) kit under warranty is limited to correction of a problem based upon a customer's complaint and subject to all of the provisions of Lexus Warranty Policy Bulletin POL94-17, dated October 10, 1994.

Title **INTRODUCTION OF BRAKE SHIM KITS & BRAKE FITTING KITS**

Full brake kits, with complete hardware, have been discontinued. Shim kits and fitting kits for the front and rear brakes are now available separately, along with previously released pad kits.

SUPPLY PARTS CHANGES:

DISCONTINUED PARTS:

Full Kit

UNCHANGED PARTS:

Shim Kit

Fitting Kit

NEW PARTS:

Pad Kit

PART NUMBER INFORMATION:

For the part numbers of these pad kits, shim kits and fitting kits matrix, please consult the most recent Lexus Parts Operations Communications Bulletin.

SERVICE INSTRUCTIONS:

1. All vehicles are to be inspected to insure that the integrity of the complete brake system is maintained. When replacing worn pads, you should replace the shims, wear indicators, (wear indicators may be riveted onto pads for some models) and shim grease at the same time using the pad kit and shim kit. Vehicles found to need extensive hardware replacement, including anti–squeal springs and support plates, should be repaired using the pad kit, shim kit and fitting kit, which together include all hardware components.

2. When applying shim grease, apply a thin layer over the shim faces as indicated below.

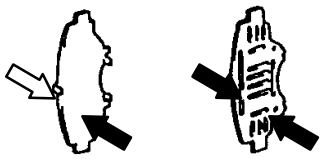

Grease application on double shim

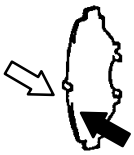

Grease application on single shim

➡ = Apply shim grease on this face.

⇨ = Do not apply shim grease on this face (piston side).

3. Anti–squeal springs and support plates my be reused if they are in good condition. When reusing anti–squeal springs and support plates inspect them for appropriate rebound and no deformation, burrs, cracks, wear, rust, or foreign materials.

LEXUS

Technical Service Information Bulletin

October 20, 2000

TSIB

Title:

BRAKE PAD CLICKING NOISE

Models:

'90 – '00 All Models

Introduction

A clicking type noise may be noticed when first applying the brakes after changing vehicle travel direction (*Drive/Forward* to *Reverse, Reverse* to *Drive/Forward*). This is a normal noise caused by the required brake pad–to–caliper clearances. When the direction of travel is changed, the brake pads may "shift" towards the new direction of travel. When the brake pad contacts the caliper, a clicking noise may be heard.

To minimize this clicking noise, a disc brake caliper grease has been made available for use during brake service/maintenance operations. Under normal usage conditions this grease should be effective for a period of 6 months to 1 year.

Applicable Vehicles

- **1990 – 2000** model year **Lexus vehicles, all models.**

Parts Information

PREVIOUS PART NUMBER	CURRENT PART NUMBER	PART NAME
N/A	08887–80609	Disc Brake Caliper Grease (50 g tube)

Warranty Information

OP CODE	DESCRIPTION	TIME	OPN	T1	T2
N/A	Not Applicable to Warranty	–	–	–	–

Application Procedure

There are two types of brake calipers: floating and fixed. Check the type of brake caliper installed on the vehicle by removing the wheel assembly.

1. Floating Type Brake Caliper

A. Lift up or remove the brake caliper and suspend it securely.

> **HINT:**
> **Do not disconnect the flexible hose from the brake caliper.**

B. If equipped with anti–squeal spring: Remove the anti–squeal springs.

C. Remove the brake pads with anti–squeal shims.

D. Remove the pad support plates from the torque plate. Clean any dust from the pad support plates, torque plates and brake pads.

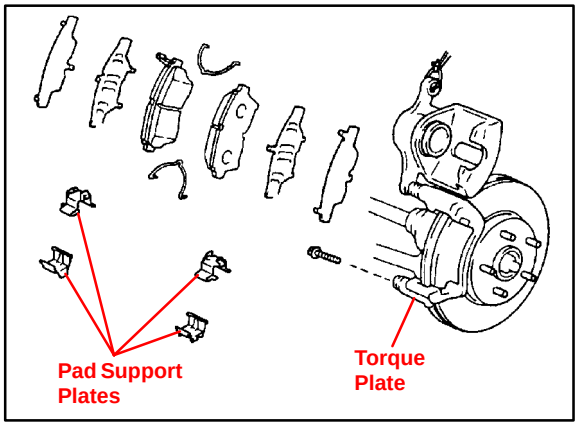

E. Apply a small amount of the disc brake caliper grease (1–2 mm thick) to both sides of the pad support plates.

> **NOTE:**
> **Do NOT apply grease to the friction surfaces of the brake pads or the disc rotor.**

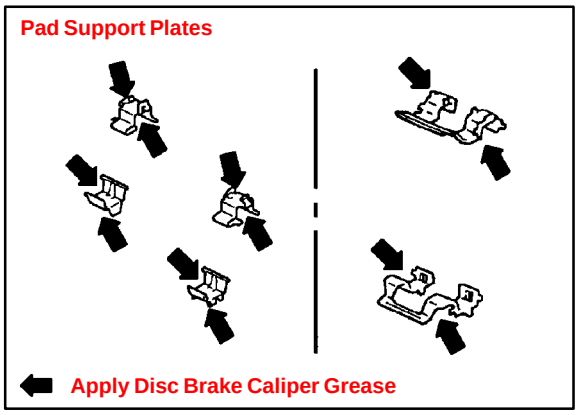

F. If the pad support plate is fixed to the torque plate with adhesive tape, perform the operation according to the following flow chart.

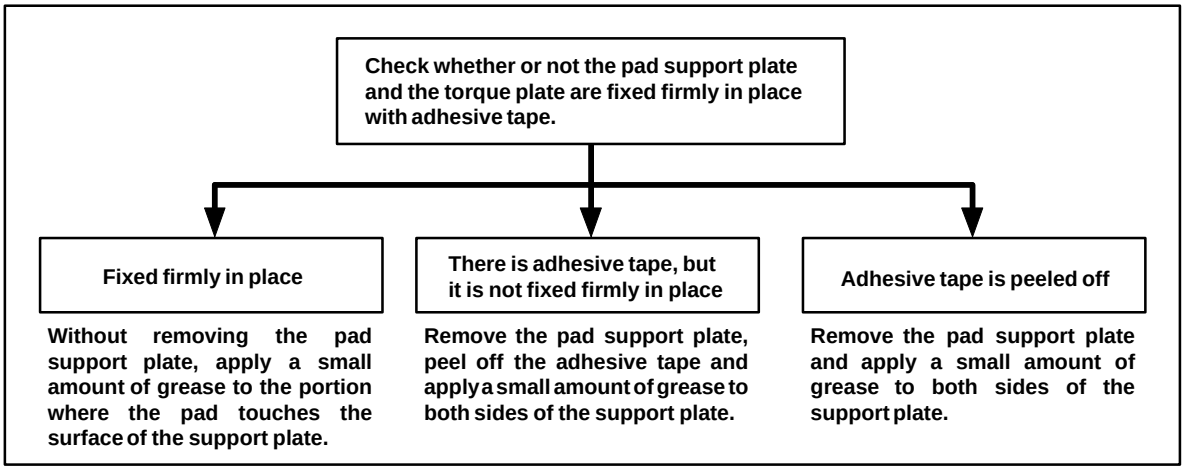

Application Procedure (Continued)

G. Apply a small amount of the disc brake caliper grease (1–2 mm thick) to the caliper as indicated in the illustration.

H. Install the brake pads with the anti–squeal shims.

I. If equipped with anti–squeal spring: Install the anti–squeal springs.

J. Press the piston in firmly and install the brake caliper.

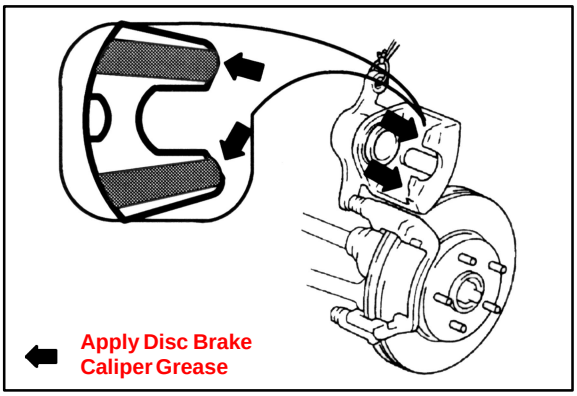

NOTE:
- **Clean excess grease from brake pad and caliper.**
- **Do NOT apply grease to the friction surfaces of the brake pads or the disc rotor.**

K. Install the wheel assembly.

2. Fixed Type Brake Caliper

There are two types of brake pads:

- Type "**A**": Has a projection on the upper and lower side of the brake pad. (See illustration.)
- Type "**B**": Has a flat upper and lower edge on the brake pad backing plate.

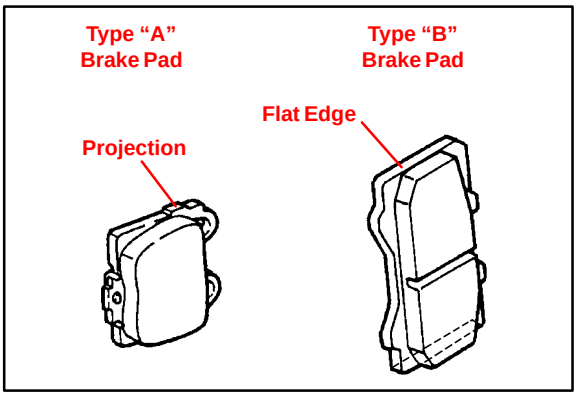

Type "A" Brake Pad

A. Remove the anti–squeal spring, clip and pad guide pin.

B. Remove the brake pads with the anti–squeal shims.

C. Clean any dust from the brake pads.

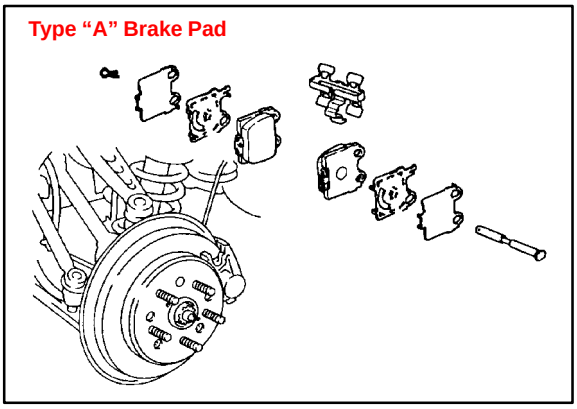

Application Procedure (Continued)

D. Apply a small amount of the disc brake caliper grease (1–2 mm thick) to the areas indicated in the illustration.

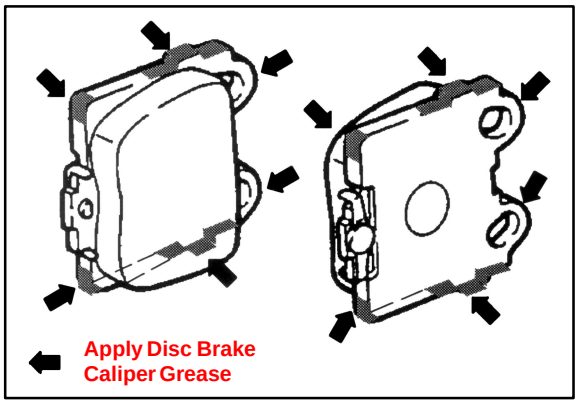

NOTE:
Do NOT apply grease to the friction surfaces of the brake pads or the disc rotor.

E. Install the brake pads with the anti–squeal shims.

NOTE:
Clean excess grease from the brake pads and caliper.

F. Install the pad guide pin, clip and anti–squeal spring.
G. Install the wheel assembly.

Type “B” Brake Pad

A. Remove the clip, pins and anti–rattle spring/pad retainer clip.
B. Remove the brake pads with the anti–squeal shims.
C. Clean any dust from the brake pads.

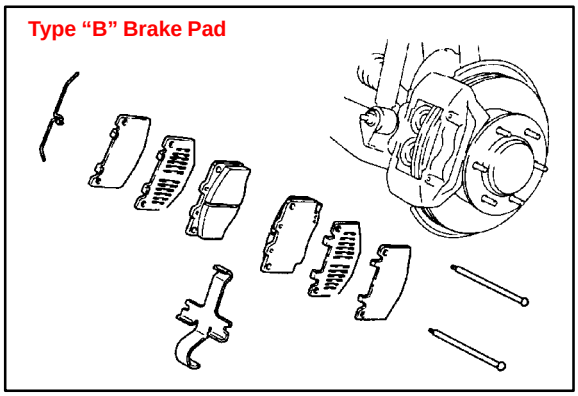

D. Apply a small amount of the disc brake caliper grease (1–2 mm thick) to the areas indicated in the illustration.

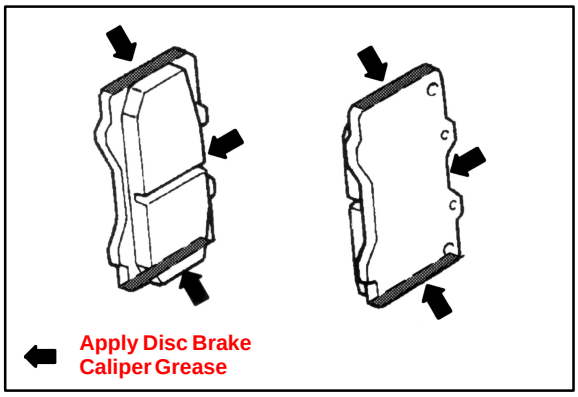

NOTE:
Do NOT apply grease to the friction surfaces of the brake pads or the disc rotor.

E. Install the brake pads with the anti–squeal shims.

NOTE:
Clean excess grease from the brake pads and caliper.

F. Install the pad guide pin, clip and anti–squeal spring.
G. Install the wheel assembly.

LEXUS

Technical Service Information Bulletin

April 3, 1998

TSIB

Title:

EVAP SYSTEM DIAGNOSIS: P0441 / P0446

Models:

ES 300, SC 400, LS 400, LX 450

Introduction

The following procedure is recommended for repair of MIL "ON" conditions involving confirmed DTC P0441 and P0446.

Affected Vehicles

- All **ES 300, SC 400, LS 400, LX 450** that display a code P0441 or P0446.

A. Diagnostics for P0441:

1. Remove Vacuum Hoses between EVAP VSV and Charcoal Canister and discard.
2. If there is a metal vapor pipe between EVAP VSV and Charcoal Canister, clean inside of vapor pipe.
3. Replace EVAP VSV and Charcoal Canister assembly with new parts.
4. Install new vacuum hoses between EVAP VSV and Charcoal Canister.

B. Diagnostics for P0446:

1. Inspect vacuum hoses and pipes between EVAP (Purge) VSV and Charcoal Canister for leaks.
2. Replace Vapor Pressure VSV and Canister.

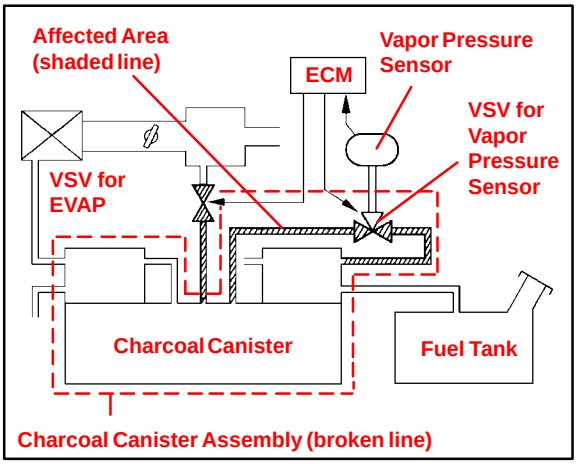

NOTE:

When performing diagnostics for an occurrence of a MIL "ON" condition, the Diagnostic Trouble Code (DTC) P0441 may be the result of debris in the Evaporative Emission Control System. This may cause blockage of a vapor line, or a stuck VSV, as described in the troubleshooting area of the Repair Manual.

Warranty Information

OP CODE	DESCRIPTION	TIME	OPN	T1	T2
N/A	Not Applicable to Warranty	–	–	–	–

LEXUS

Technical Service Information Bulletin

February 24, 2003

Title:

SULFUR ODOR FROM EXHAUST

Models:

All Models

TSIB

ENGINE

EG001-03

Introduction

Some owners of Lexus vehicles may experience a sulfur–like or “rotten egg” odor from the exhaust system. Sulfur is a natural component of crude oil from which gasoline is refined and the amount of sulfur can be decreased through the refining process. The amount of sulfur in fuel sold in California is regulated, however gasoline sold in other states can have substantially higher sulfur content. Sulfur content also varies considerably between gasoline brands and locations.

Applicable Vehicles

- **All Models.**

Repair Procedure

A sulfur odor emitted from the vehicle’s tailpipe does not necessarily indicate that there is an issue with the engine’s running condition, but is most likely directly related to the fuel. If the vehicle is exhibiting an excessive sulfur odor, the following checks should be performed:

- If the MIL light is ON, check for DTCs and repair as necessary.

If no trouble is found after performing the above check, recommend the customer try a different source of fuel.

Replacement of oxygen sensors, air/fuel ratio sensors or catalytic converters will not reduce the odor and will therefore **not** be considered warrantable.

Warranty Information

OP CODE	DESCRIPTION	TIME	OFP	T1	T2
N/A	Not Applicable to Warranty	–	–	–	–

Title:

EVAP SYSTEM OPERATION INFORMATION

Models:

All '96 – '01 Models

Introduction

This service bulletin provides supplemental information regarding the system design, operation, and diagnostics of the Early Type (Non–Intrusive) and Late Type (Intrusive) EVAP Systems found on 1996 model year and later OBD II equipped vehicles.

Applicable Vehicles

MODEL	1996	1997	1998	1999	2000	2001
ES 300	Early	Early	Early	Early	Late	Late
GS 300	N/A	N/A	Early	Early	Early	Late
GS 400	N/A	N/A	Early	Early	Early	N/A
GS 430	N/A	N/A	N/A	N/A	N/A	Late
IS 300	N/A	N/A	N/A	N/A	N/A	Late
LS 400	N/A	N/A	Early	Early	Late	N/A
LS 430	N/A	N/A	N/A	N/A	N/A	Late
LX 470	N/A	N/A	Early	Early	Early	Early
RX 300	N/A	N/A	N/A	Early	Late	Late
SC 300	N/A	N/A	Early	Early	Late	N/A
SC 400	N/A	Early	Early	Early	Late	N/A

Contents

This bulletin is divided into the following sections:

Early Type and Late Type EVAP System Outline
1. **Early Type Description . . . . . Pages 2–4**
2. **Late Type Description . . . . . Pages 4–5**
3. **Late Type System Monitor Sequence . . . . . Pages 6–8**

Diagnostic Tips For Late Type EVAP System . . . . . Pages 8–11

Warranty Information

OP CODE	DESCRIPTION	TIME	OPN	T1	T2
N/A	Not Applicable to Warranty	–	–	–	–

Early Type System Description

Early Type (Non–Intrusive) EVAP System Overview

There are a variety of EVAP systems in use with different monitoring strategies. It is essential that the EVAP system be correctly identified before beginning diagnosis. The Repair Manual is the best source for this information. The following information covers the different systems.

The first system described is the Early Type (Non–Intrusive) EVAP System. Refer to the Applicable Vehicles chart for applicability information.

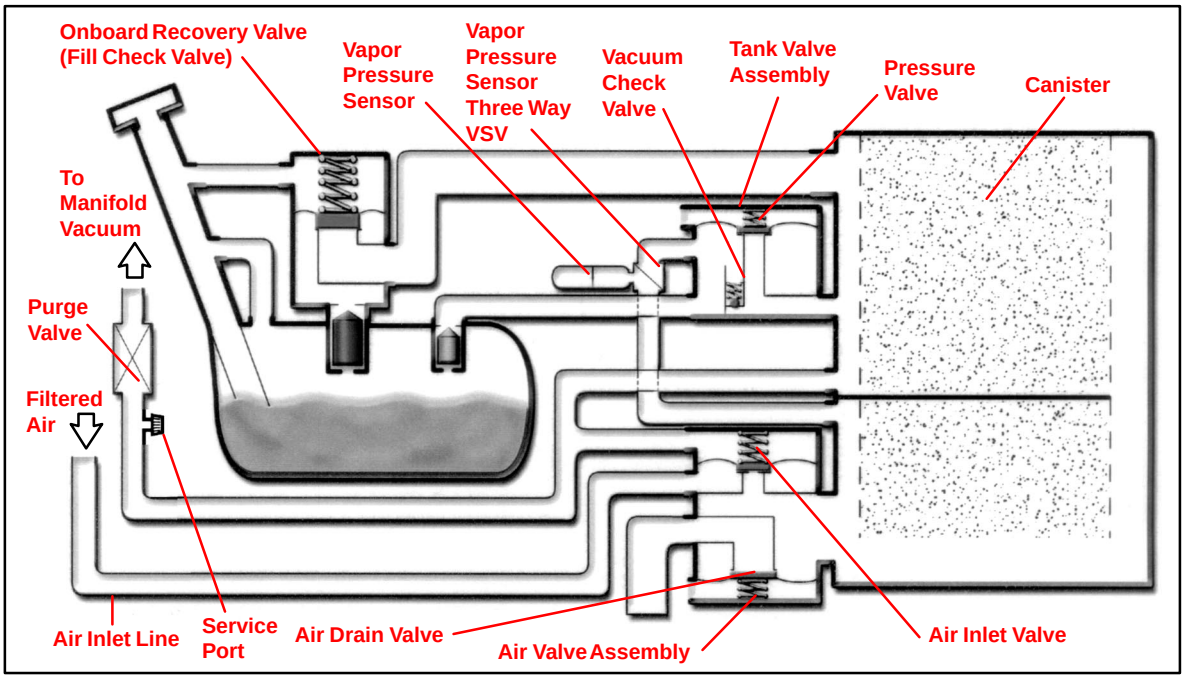

Purge Operation

When the engine has reached predetermined parameters (closed loop, engine temp. above 125°F, etc.), stored fuel vapors are purged from the canister whenever the purge VSV is opened by the ECM. At the appropriate time, the ECM will turn on the purge VSV.

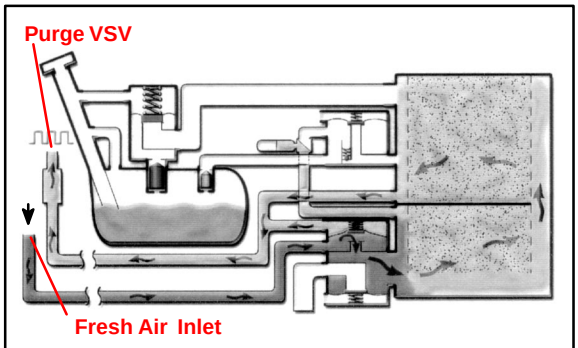

Figure 1. Purge Operation

The ECM will change the duty ratio cycle of the purge VSV thus controlling purge flow volume. Purge flow volume is determined by manifold pressure and the duty ratio cycle of the purge VSV. Atmospheric pressure is allowed into the canister to ensure that purge flow is constantly maintained whenever purge vacuum is applied to the canister (see Figure 1).

Early Type System Description (Continued)

ORVR Operation

During refueling, low pressure above the diaphragm in the onboard recovery valve lifts allowing fuel vapors into the charcoal canister. At the same time, the air drain valve opens and the charcoal absorbs the fuel vapors (see Figure 2).

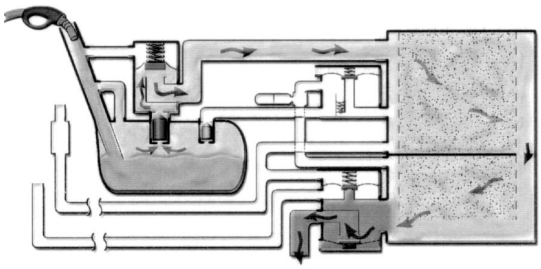

Figure 2. ORVR Operation

Early Type (Non–Intrusive) EVAP System DTCs

EVAP Monitor Leak Operation P0440

The ECM tests for leaks by measuring EVAP system pressure in the lines, charcoal canister, and fuel tank. When the EVAP pressure is higher or lower than atmospheric pressure, the ECM concludes that no leaks are present. EVAP pressure is measured by the vapor pressure sensor. If either the tank or canister purge side is at atmospheric pressure under specific conditions, the ECM determines there is a leak.

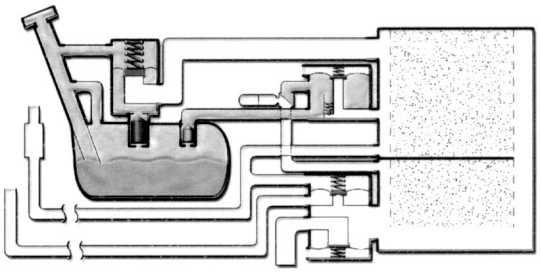

Figure 3. Fuel Tank Side of System

If DTC P0440 is present, the leak is on the fuel tank side of the EVAP system. This also includes the lines between the fuel tank and part of the canister. When the Vapor Pressure sensor is measuring tank pressure, the ECM is observing changes in pressure and comparing tank pressure to atmospheric pressure. No difference in pressure indicates a leak. The ECM may take 20 minutes or more to complete testing the fuel tank side (see Figure 3).

Canister Leak Detection P0446

When the ECM switches the vapor pressure VSV to canister side, the ECM measures canister pressure. A leak on the canister side can set multiple DTCs (see Figure 4).

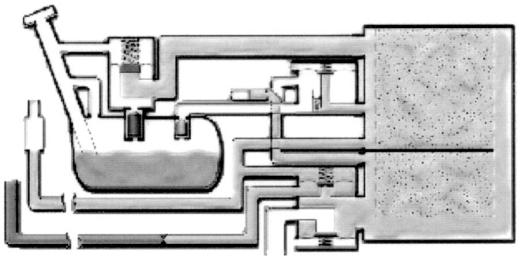

Figure 4. Canister Side of System

Early Type System Description (Continued)

Vapor Purge Flow P0441

The EVAP monitor is designed to detect:

- Restricted vapor purge flow when the purge VSV is open
- Inappropriate vapor purge flow when the purge VSV is closed

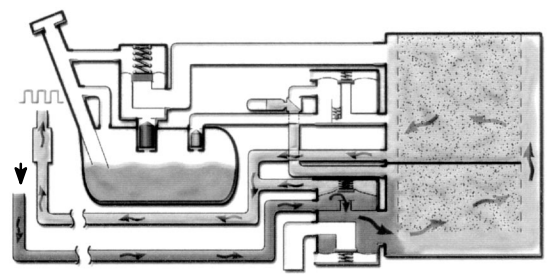

Figure 5. Flow During Purge Operation

Under normal purge conditions, pressure pulsations generated by the cycling of the purge VSV are present in the canister and detected by the Vapor Pressure sensor.

Three–Way VSV P0446

The three–way VSV is connected to the Vapor Pressure sensor, canister, and fuel tank. This VSV allows the Vapor Pressure sensor to detect either canister or tank pressure.

There are two modes the ECM can use to determine if the three–way VSV is malfunctioning. The three–way VSV is judged to be normal if there is pressure difference between the tank and canister when the three–way VSV is switched to look at the charcoal canister and fuel tank side of system.

If there isn't any pressure difference between the fuel tank and canister, the ECM looks for the following conditions:

- During purging, pressure pulsations generated by the purge VSV are not present in the canister as detected by Vapor Pressure sensor, the three–way VSV is judged to be defective.
- If there are pressure pulsations detected by the Vapor Pressure sensor present in the fuel tank, the three–way VSV is judged to be defective.

Late Type System Description

Late Type (Intrusive) EVAP System Overview

The Late Type EVAP System, also known as the Intrusive type, was developed to meet the very stringent, mandated standard of detecting a hole 0.020 inch (0.5 mm). This system uses many of the same components as the early type EVAP system. Purge, vacuum relief, pressure relief, and ORVR operations are identical to the early type. Refer to the Applicable Vehicles chart for applicability information.

The following changes were made to the Late Type EVAP System:

- Vapor pressure sensor connected to the fuel tank.
- Bypass VSV in the place of the three way VSV.
- Canister Closed Valve (CCV) on the air inlet line.

Late Type System Description (Continued)

Late Type (Intrusive EVAP System)

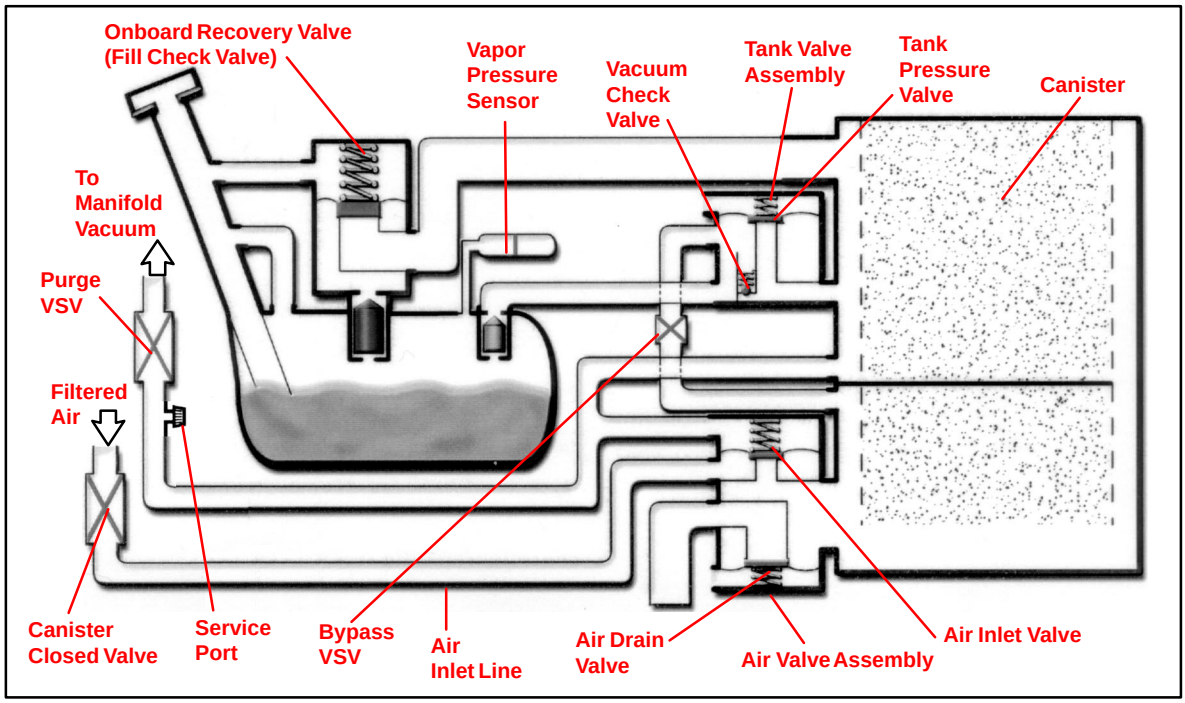

Tank Side

The bypass VSV and the fill check valve assembly isolates the tank pressure side from the canister side (see Figure 1).

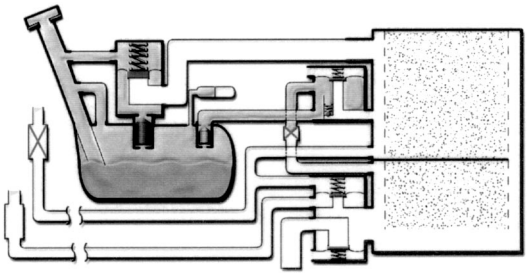

Figure 1. Fuel Tank Side of System

Canister Side

The bypass VSV and the Fill Check valve also isolate the canister side from the tank side (see Figure 2).

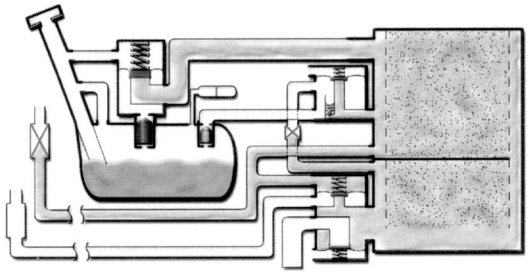

Figure 2. Canister Side of System

Late Type System Monitor Sequence

Late Type (Intrusive) EVAP System Monitor Sequence

The monitoring sequence for leak detection is different from that of the Early Type EVAP System. The Late Type applies a very small vacuum to the EVAP system. The ECM then determines if there is a problem in the system based on the vapor pressure sensor signal.

Monitor Sequence

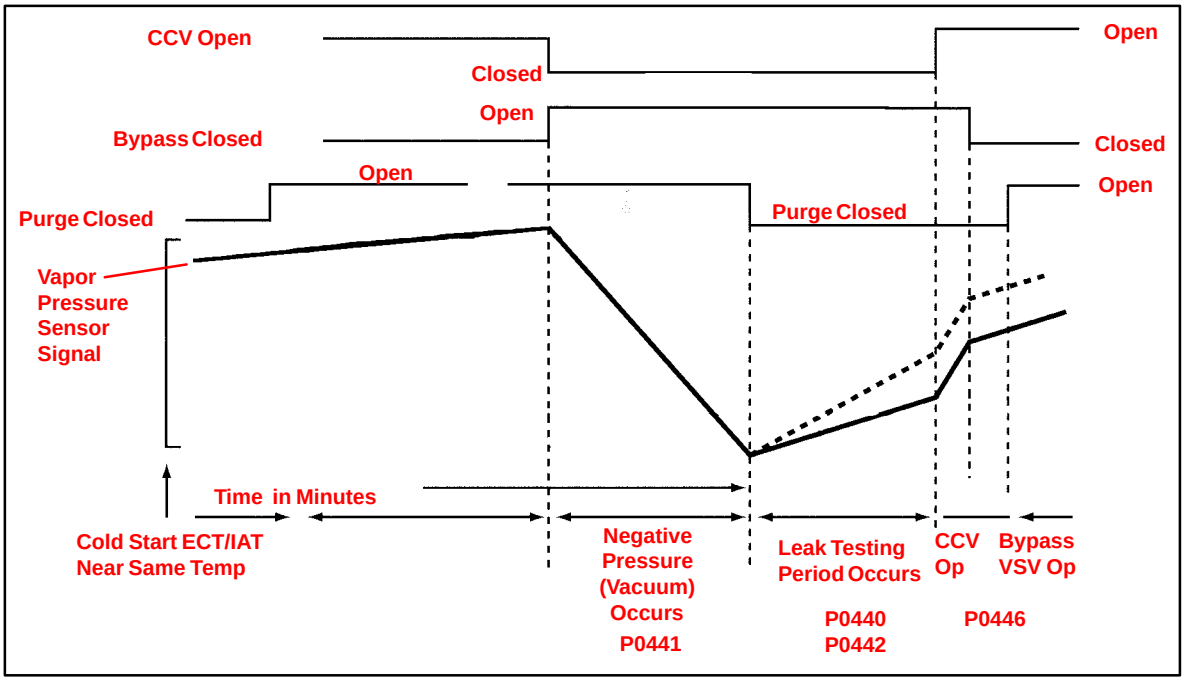

Monitor Operation

The monitor sequence begins with a cold engine start. The IAT and ECT sensors must have approximately the same temperature reading.

The ECM is constantly monitoring fuel tank pressure. As the temperature of the fuel increases, pressure slowly rises.

The ECM will purge the charcoal canister at the appropriate time (see Figure 1). With bypass VSV closed, pressure will continue to rise in fuel tank.

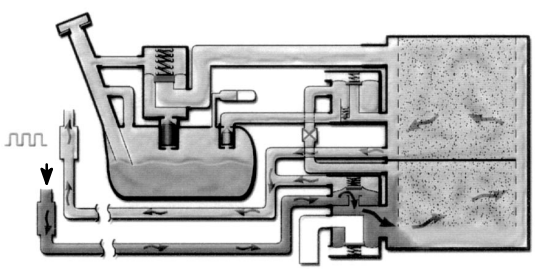

Figure 1. Canister Purge

Late Type System Monitor Sequence (Continued)

Purge VSV Operation – P0441

At a predetermined point, the ECM closes the CCV and opens the Bypass VSV causing vacuum to increase in the entire EVAP system.

The ECM continues to operate the purge VSV until the vacuum is increased to a specified point at which time the ECM closes the purge VSV (see Figure 2).

If the vacuum did not increase, or if the vacuum increased beyond the specified limit, the ECM judges the purge VSV and related components to be faulty.

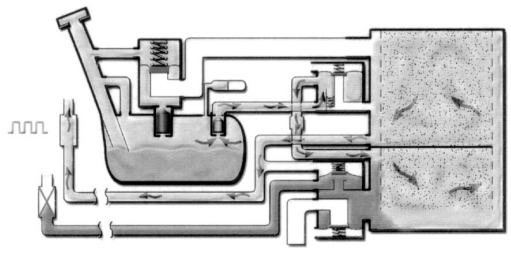

Figure 2. Vacuum Application

Hole Detection P0440 and P0442

The rate of pressure increase as detected by the vapor pressure signal indicates the if there is a leak and if it is a large or small leak.

After purge valve operation, the purge VSV is turned off sealing the vacuum in the system and the ECM begins to monitor the pressure increase (see Figure 3). Some increase is normal. A very rapid, sharp increase in pressure indicates a leak in the EVAP system and sets the DTC P0440.

This monitoring method is also able to distinguish what is called the small leak detection. A pressure rise just above normal indicates a very small hole and will set the DTC P0442.

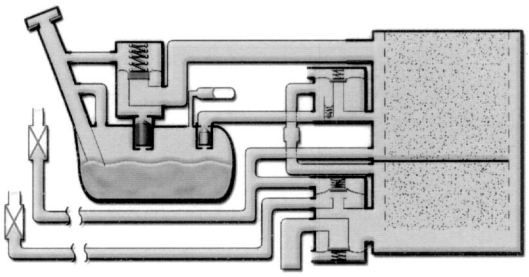

Figure 3. System Sealed

Vent Control, CCV Operation P0446

This stage checks the CCV and vent (air inlet side) operation. When the vapor pressure rises to a specified point, the ECM opens the CCV. Pressure will increase rapidly because of the air allowed into the system. No increase or an increase below specified rate of pressure increase indicates a restriction on the air inlet side.

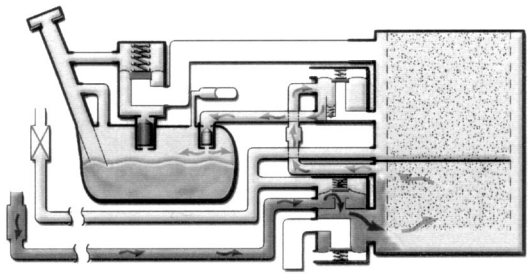

Figure 4. CCV Opens

Late Type System Monitor Sequence (Continued)

Bypass VSV Operation P0446

In the next stage, the ECM closes the bypass VSV. This action blocks air entering the fuel tank side of the system. The pressure rise on the fuel tank side is no longer as great. If there was no change in pressure, the ECM will conclude the bypass VSV did not close.

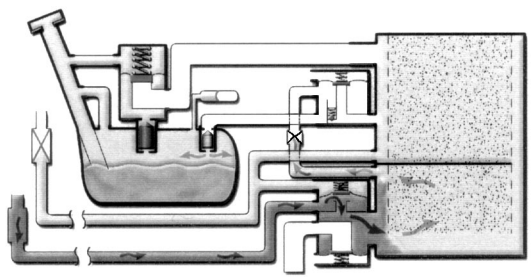

Figure 5. Bypass VSV Closes

Diagnostic Tips for Late Type EVAP System

This diagnostic process tests the EVAP System. The following diagnostic tips may be used in conjunction with the Diagnostic Procedures for EVAP DTCs listed in the Repair Manual. They may be used for all Late Type (Intrusive) EVAP Systems and for all EVAP DTCs. Refer to the Applicable Vehicles chart for applicability information.

The EVAP System Pressure Test Kit (P/N 00002–6872A) and the Scan Tool can be used to diagnose the EVAP System. Measuring EVAP System pressures using the EVAP System Pressure Tester Gauge and the Scan Tool can aid in the identification of leaks in the system.

System Outline

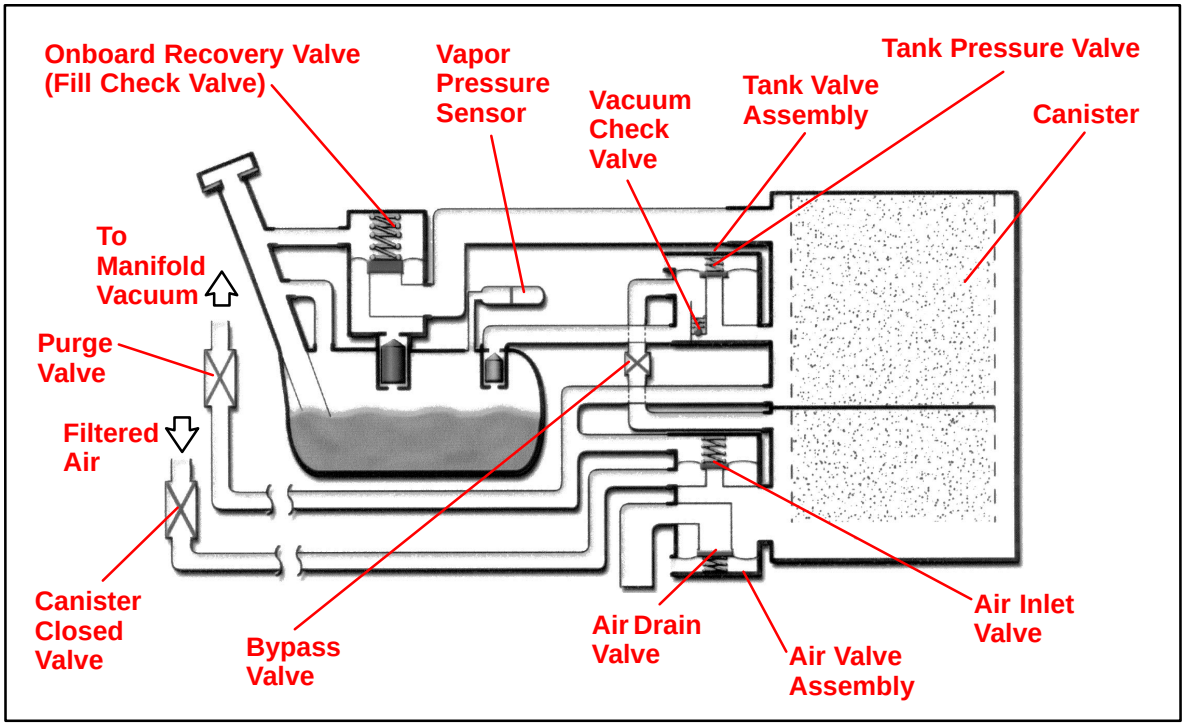

Diagnostic Tips for Late Type EVAP System (Continued)

Diagnostic Process Flow Chart

START

PRELIMINARY CHECK
- **Fuel level should be between 1/4 and 3/4**
- **Visually inspect for pressure Fuel Cap**

DO NOT TIGHTEN OR REMOVE!

NG → **DO NOT PROCEED!**

OK

SCAN TOOL SETUP
A) Connect Scan Tool to DLC3 on vehicle.
B) Go to the SETUP menu and select UNIT CONVERSION.
C) Under VAPOR PRESSURE, Select ABS for absolute pressure, and mmHg for millimeters of mercury. This is to match the Repair Manual specifications.
D) Go back to FUNCTION SELECT menu and select ENHANCED OBD II.
E) Select NORMAL MODE. Then select CURRENT DATA and USER SELECT.
F) Using the arrow key, select VAPOR PRESS from the DATA LIST and select YES.
G) Press ENTER. You will now be able to monitor the Vapor Pressure Sensor reading.

PRESSURIZE EVAP SYSTEM (System Integrity Check)
This test checks for leaks in the canister and fuel tank sides. The CCV and Air Inlet Lines will be checked separately.
A) Clamp air drain line with supplied hose pliers.
B) Locate the vapor pressure sensor. If the pressure sensor has two hoses connected to it, disconnect the hose between the air drain and pressure sensor at the pressure sensor and plug the hose.
C) Pressurize EVAP system. Turn off the pump and seal system (See pump directions)
D) Note pump pressure readings and Vapor Pressure Sensor reading.
E) Compare the results to one of the four conditions listed below and proceed as directed.

Pump pressure gauge and vapor pressure above atmospheric pressure (above 762 mmHg). No leak in canister or tank.	**Pump pressure gauge zero, vapor pressure above atmospheric pressure (above 762 mmHg). Leak is on canister side of system.**	**Pump pressure gauge is above atmospheric pressure (above zero), vapor pressure is at 762 mmHg. Leak is on the fuel tank side of system.**	**Pump pressure gauge at zero, vapor pressure is at 762 mmHg. The leak(s) is/are on the canister and tank sides or a leak at a point common to both sides of system.**
Remove hose pliers from the air drain hose on the charcoal canister before proceeding with additional checks.	**Remove hose pliers from the air drain hose on the charcoal canister before proceeding with additional checks.**	**Remove hose pliers from the air drain hose on the charcoal canister before proceeding with additional checks.**	**Remove hose pliers from the air drain hose on the charcoal canister before proceeding with additional checks.**
Go to CCV/Air Inlet Line Check.	**Go to "Canister Leak Check." Diagram on page 11.**	**Go to "Fuel Tank Leak Check." Diagram on page 10.**	**Go to "Fuel Tank Leak Check." Diagram on page 10.**

(Continued on following page)

Diagnostic Tips for Late Type EVAP System (Continued)

Diagnostic Process Flow Chart (Continued)

(Continued from previous page)

CCV and Air Inlet Line Check.

A) Disconnect the air inlet line from the charcoal canister.
B) Using the supplied step–down brass adapter (or equivalent) connect the Pressure Supply Hose to the air inlet line.
C) Using the Scan Tool Active Test, turn on the CCV. This will close the CCV.
D) Pressurize the line. Once pressurized, turn off the pump and seal the line (Pressure Hold Switch to "Closed" and Vent Switch to "Closed"). Pressure should hold. If not, check CCV and connections.
E) Next, using the Scan Tool, turn off the CCV. This will open the CCV. The pressure should decrease. If not, check the CCV and connections.
F) After completing the test, reconnect air inlet line to charcoal canister.

Go to "Return Vehicle to Service" on page 11.

Fuel Tank Leak Check

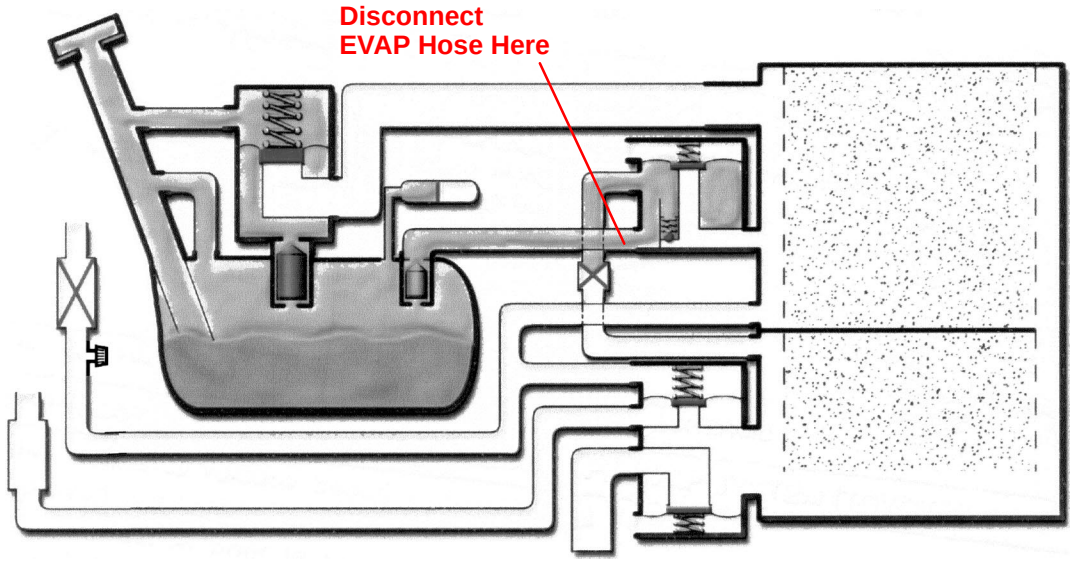

A. Using the supplied brass step–down adapter, disconnect the EVAP hose from the charcoal canister side as indicated above. Connect Pressure Supply hose from Pressure Test Kit to the EVAP hose and pressurize the fuel tank to 30 mmHg (4 kPa / 0.58 psi).
B. Check that the internal pressure of the tank will hold for 1 minute. Check shaded areas for leaks (soapy water can be used for leak detection). If pressure holds, then perform the Canister Leak Check.
C. When done, reconnect the EVAP line hose to the charcoal canister.

Diagnostic Tips for Late Type EVAP System (Continued)

Canister Leak Check

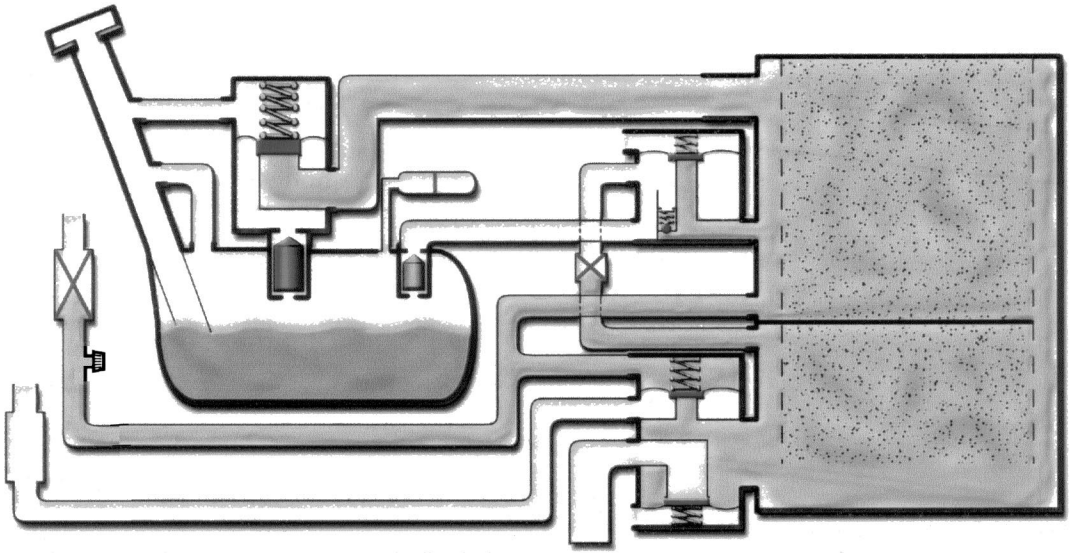

A. Connect the Pressure Supply hose from the Pressure Test Kit to the Green EVAP System Service Port located on the EVAP Purge VSV line in the engine compartment.

B. Using the directions on the inside of the EVAP System Pressure Test Kit lid, pressurize the EVAP system. Once pressurized, turn off the pump and seal the system (Pressure Hold Switch to "Closed" and Vent Switch to "Closed")

C. With system pressurized at EVAP Service Port, check shaded areas for leaks (soapy water can be used for leak detection).

Return Vehicle to Service

A. After performing above checks, be sure to reconnect all lines and verify that all plugs and hose pliers used for diagnosis have been removed.

B. For additional diagnostic procedures and information, refer to the appropriate Repair Manual.

Title:
READINESS MONITOR DRIVE PATTERNS
Models:
All ’96 – ’02

Introduction

The On–Board Diagnostic (OBDII) system is designed to monitor the performance of emission–related components and report any detected abnormalities in the form of Diagnostic Trouble Codes (DTCs). Since the various components need to be monitored during different driving conditions, the OBDII system is designed to run separate monitoring programs called Readiness Monitors. Many state Inspection and Maintenance (I/M) programs require that vehicles complete their Readiness Monitors prior to beginning an emissions test.

The current status of the Readiness Monitors can be seen by using the Lexus Diagnostic Tester with version 9.0 software (or newer), or a generic OBDII Scantool. To view the Readiness Monitor status using the Lexus Diagnostic Tester, select “Monitor Status” from the Enhanced OBDII Menu. A status of “complete” indicates that the necessary conditions have been met to run the performance tests for the related Readiness Monitor.

The Readiness Monitor will be reset to “incomplete” if:
- ECU has lost power (battery or fuse).
- DTCs have been cleared.
- The conditions for running the Readiness Monitor have not been met.

In the event that any Readiness Monitor shows “incomplete,” follow the appropriate Readiness Monitor Drive Pattern to change the readiness status to “complete.”
Refer to the Readiness Monitor Drive Pattern Application Table to determine which drive pattern should be followed.

Contents

SECTION		PAGE(S)
Readiness Monitor Drive Pattern Application Tables		2–3
Readiness Monitor Drive Patterns		
1	EGR Monitor (All Except 1FZ–FE Engine)	4
2	EGR Monitor (For 1FZ–FE Engine)	5
3	Catalyst Monitor (O2S Type)	6
4	Catalyst Monitor (AF Sensor Type)	7
5	EVAP Monitor (Internal Pressure Monitor/Non–Intrusive Type)	8–9
6	EVAP Monitor (Vacuum Pressure Monitor/Intrusive Type)	10–11
7	EVAP Monitor (Without Leak Detection)	12
8	Oxygen Sensor Monitor (Front and Rear O2S System)	13
9	Oxygen/AF Sensor Monitor (Front AF Sensor and Rear O2S System)	14
10	Oxygen/AF Sensor Heater Monitor	15

Applicable Vehicles

- **All 1996 – 2002** model year **Lexus** vehicles.

Warranty Information

OP CODE	DESCRIPTION	TIME	OPN	T1	T2
N/A	Not Applicable to Warranty	–	–	–	–

Terms & Definitions

J1930 TERM	J1930 DEFINITION	TOYOTA/LEXUS DIAGNOSTIC TESTER PARAMETER
IAT	Intake Air Temperature	Intake Air
ECT	Engine Coolant Temperature	Coolant Temp

Required Tools & Material

TOOLS & MATERIAL	PART NUMBER	QUANTITY
Lexus Diagnostic Tester Kit	01001270	1
12 Megabyte Diagnostic Tester Program Card with version 9.0a Software (or later)	01002593-005	1

NOTE:

A generic OBDII Scantool can be used in place of the Toyota Diagnostic Tester.

CAUTION:

Strict observance of posted speed limits, traffic laws and road conditions are required when performing these drive patterns.

NOTE:

- **These drive patterns represent the fastest method to satisfy all necessary conditions which allow the specific readiness monitor to complete.**
- **In the event that the drive pattern must be interrupted (possibly due to traffic conditions or other factors) the drive pattern can be resumed and, in most cases, the readiness monitor will still set to "complete."**
- **To ensure rapid completion of readiness monitors, avoid sudden changes in vehicle load and speed (driving up and down hills and/or sudden acceleration).**

Readiness Monitor Drive Pattern Application Tables

MODEL YEAR	MODEL	ENGINE	CATEGORY	DRIVE PATTERN NUMBER*									
				EGR		CATALYST		EVAP			O2S/AF SENSOR		HTR
				1	2	3	4	5	6	7	8	9	10
1996	LS 400	1UZ–FE		X		X		X			X		X
	GS 300	2JZ–GE		X		X				X	X		X
	SC 400	1UZ–FE		X		X				X	X		X
	SC 300	2JZ–GE		X		X				X	X		X
	ES 300	1MZ–FE		X		X		X			X		X
	LX 450	1FZ–FE			X	X		N/A			X		X
1997	LS 400	1UZ–FE		X		X		X			X		X
	GS 300	2JZ–FE		X		X				X	X		X
	SC 400	1UZ–FE		X		X				X	X		X
	SC 300	2JZ–GE		X		X				X	X		X
	ES 300	1MZ–FE		X		X		X			X		X
	LX 450	1FZ–FE			X	X		N/A			X		X

*** Readiness Monitor Drive Patterns:**

1. EGR (All Except 1FZ–FE Engine)
2. EGR (For 1FZ–FE Engine)
3. Catalyst (O2S Type)
4. Catalyst (AF Sensor Type)
5. EVAP (Internal Pressure Monitor/Non–Intrusive Type)
6. EVAP (Vacuum Pressure Monitor/Intrusive Type)
7. EVAP (Without Leak Detection)
8. Oxygen Sensor Monitor (Front & Rear O2S System)
9. Oxygen/AF Sensor Monitor (Front AF Sensor & Rear O2S System)
10. Oxygen/AF Sensor Heater Monitor

Readiness Monitor Drive Pattern Application Tables (Continued)

MODEL YEAR	MODEL	ENGINE	CATEGORY	DRIVE PATTERN NUMBER*									
				EGR		CATALYST		EVAP			O2S/AF SENSOR		HTR
				1	2	3	4	5	6	7	8	9	10
1998	LS 400	1UZ–FE		N/A		X		X			X		X
	GS 300	2JZ–FE				X		X			X		X
	SC 400	1UZ–FE				X		X			X		X
	SC 300	2JZ–GE				X		X			X		X
	ES 300	1MZ–FE	Fed	X		X		X			X		X
			CA	X			X	X				X	X
	LX 470	2UZ–FE		X		X		X			X		X
1999	LS 400	1UZ–FE		N/A		X		X			X		X
	GS 400	1UZ–FE				X		X			X		X
	GS 300	2JZ–FE				X		X			X		X
	SC 400	1UZ–FE				X		X			X		X
	SC 300	2JZ–FE				X		X			X		X
	ES 300	1MZ–FE					X	X				X	X
	LX 470	2UZ–FE				X		X			X		X
	RX 300	1MZ–FE					X	X				X	X
2000	LS 400	1UZ–FE		N/A		X			X		X		X
	GS 400	1UZ–FE				X		X			X		X
	GS 300	2JZ–FE				X			X		X		X
	SC 400	1UZ–FE				X			X		X		X
	SC 300	2JZ–FE				X			X		X		X
	ES 300	1MZ–FE					X		X			X	X
	LX 470	2UZ–FE				X		X			X		X
	RX 300	1MZ–FE					X		X			X	X
2001	LS 430	3UZ–FE		N/A		X			X		X		X
	GS 430	3UZ–FE				X			X		X		X
	GS 300	2JZ–FE				X			X		X		X
	IS 300	2JZ–FE				X			X		X		X
	ES 300	1MZ–FE					X		X			X	X
	LX 470	2UZ–FE				X		X			X		X
	RX 300	1MZ–FE					X		X			X	X
2002	LS 430	3UZ–FE		N/A		X			X		X		X
	GS 430	3UZ–FE				X			X		X		X
	GS 300	2JZ–FE				X			X		X		X
	SC 430	3UZ–FE				X			X		X		X
	IS 300	2JZ–FE				X			X		X		X
	ES 300	1MZ–FE					X		X			X	X
	LX 470	2UZ–FE				X			X		X		X
	RX 300	1MZ–FE					X		X			X	X

*** Readiness Monitor Drive Patterns:**

1. EGR (All Except 1FZ–FE Engine)
2. EGR (For 1FZ–FE Engine)
3. Catalyst (O2S Type)
4. Catalyst (AF Sensor Type)
5. EVAP (Internal Pressure Monitor/Non–Intrusive Type)
6. EVAP (Vacuum Pressure Monitor/Intrusive Type)
7. EVAP (Without Leak Detection)
8. Oxygen Sensor Monitor (Front & Rear O2S System)
9. Oxygen/AF Sensor Monitor (Front AF Sensor & Rear O2S System)
10. Oxygen/AF Sensor Heater Monitor

Readiness Monitor Drive Patterns: EGR Monitors

DRIVE PATTERN NO. 1: EGR Monitor (All Except 1FZ–FE Engine)

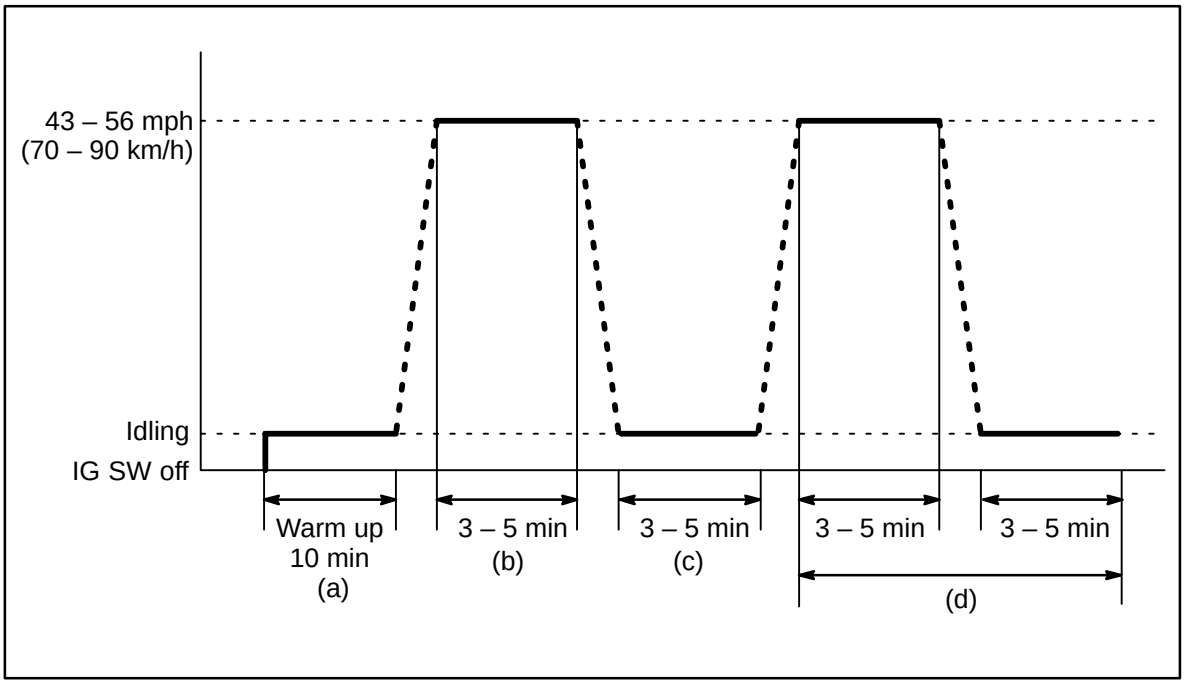

Preconditions

The monitor will not run unless:

- MIL is OFF.
- Altitude is 7800 feet (2400 m) or less.
- IAT (Intake Air) is 14°F (–10°C) or greater.

Drive Pattern Procedure

Connect the OBDII Scantool to the DLC3 connector to check monitor status and preconditions.

a. If IAT (Intake Air) is less than 50°F (10°C) when starting the engine, idle the engine for approximately 10 minutes.
b. Drive the vehicle at 43 – 56 mph (70 – 90 km/h) for a period of 3 – 5 minutes.

NOTE:
- **Do not allow the Throttle Position (TP) to exceed 30%.**
- **Drive with smooth throttle operation and avoid sudden acceleration.**

c. Stop the vehicle and let the engine idle for 3 – 5 minutes.
d. Repeat steps “b” and “c” once.

If readiness status does not switch to “complete,” ensure preconditions are met, turn the ignition OFF, then repeat steps “b” through “d.”

NOTE:
The readiness status may not switch to “complete” after the first drive pattern trip if a Pending Code has been set (first trip for a two–trip DTC).
- **Pending Codes are available from the DTC Info Menu in Enhanced OBDII.**
- **Pending Codes indicate a POTENTIAL problem was detected. A second trip is needed to confirm the DTC prior to diagnosis.**
- **Once a second trip is completed, a current DTC will be stored.**

Readiness Monitor Drive Patterns: EGR Monitors (Continued)

DRIVE PATTERN NO. 2: EGR Monitor (for 1FZ–FE Engine)

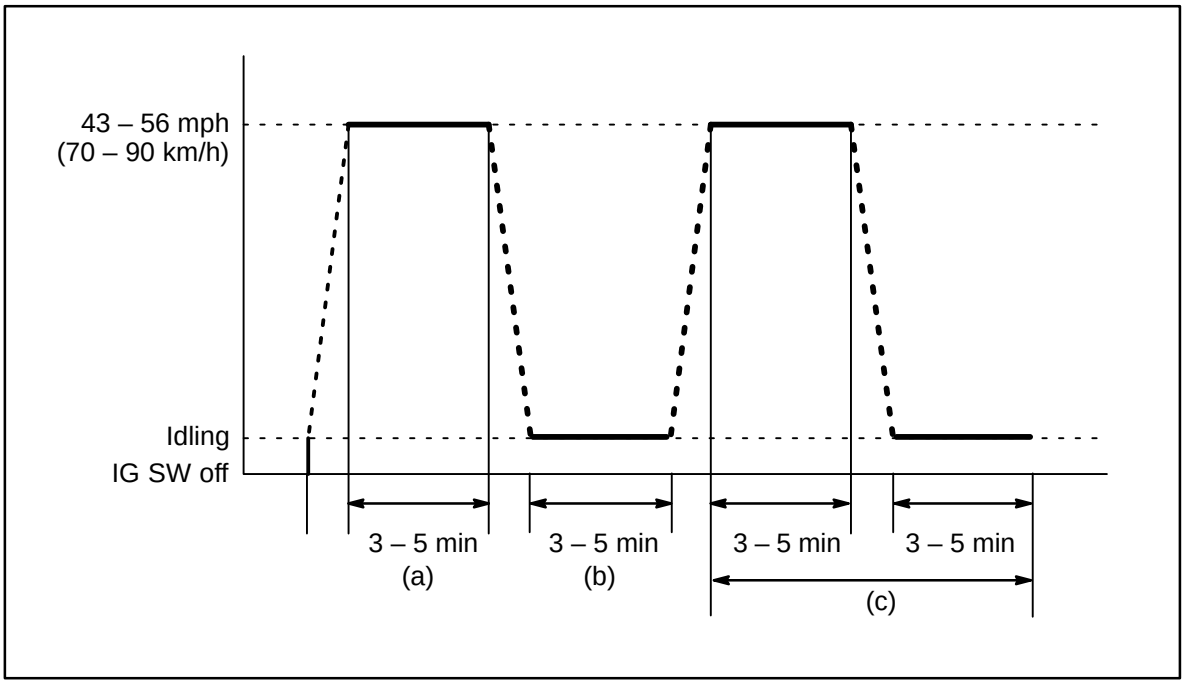

Preconditions

The monitor will not run unless:

- MIL is OFF.
- Altitude is 7800 feet (2400 m) or less.
- IAT (Intake Air) is 14°F (–10°C) or greater.
- ECT (Coolant Temp) is less than 104°F (40°C).

Drive Pattern Procedure

Connect the OBDII Scantool to DLC3 to check monitor status and preconditions.

a. Start the engine and as soon as safely possible begin driving the vehicle at 43 – 56 mph (70 – 90 km/h) for a period of 3 – 5 minutes.

NOTE:
- **Do not allow the Throttle Position (TP) to exceed 30%.**
- **Drive with smooth throttle operation and avoid sudden acceleration.**

b. Stop the vehicle and let the engine idle for 3 – 5 minutes.

c. Repeat steps “a” and “b” once.

If readiness status does not switch to “complete,” ensure preconditions are met, turn the ignition OFF, then repeat steps “a” through “c.”

NOTE:
The readiness status may not switch to “complete” after the first drive pattern trip if a Pending Code has been set (first trip for a two–trip DTC).
- **Pending Codes are available from the DTC Info Menu in Enhanced OBDII.**
- **Pending Codes indicate a POTENTIAL problem was detected. A second trip is needed to confirm the DTC prior to diagnosis.**
- **Once a second trip is completed, a current DTC will be stored.**

Readiness Monitor Drive Patterns: Catalyst Monitors

DRIVE PATTERN NO. 3: Catalyst Monitor (O2S Type)

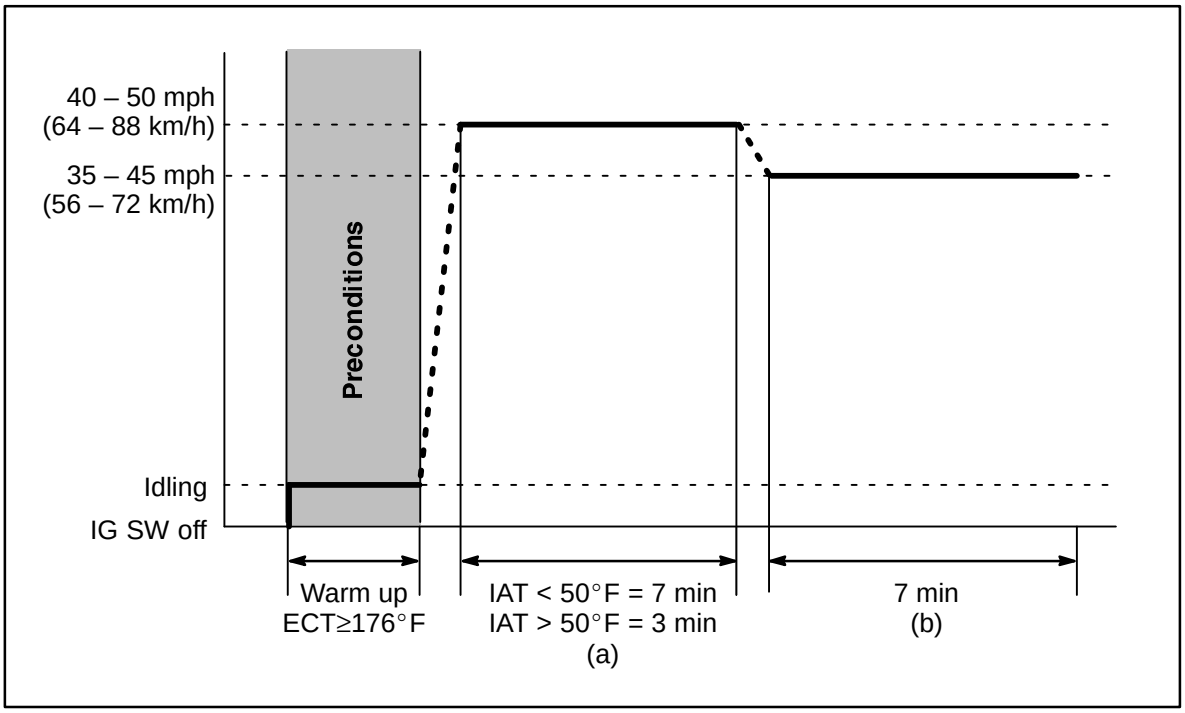

Preconditions

The monitor will not run unless:

- MIL is OFF.
- ECT (Coolant Temp) is 176°F (80°C) or greater.
- IAT (Intake Air) is 14°F (–10°C) or greater.*

  *** For 2002 MY and later vehicles:** The readiness test can be completed in cold ambient conditions (less than 14°F / –10°C), if the drive pattern is repeated a second time after cycling the ignition OFF.

Drive Pattern Procedure

Connect the OBDII Scantool to DLC3 to check monitor status and preconditions.

Note the IAT (Intake Air) value during engine startup. The driving time must be adjusted during step “a” based upon IAT (Intake Air) value at startup.

a. Drive the vehicle at 40 – 55 mph (64 – 88 km/h) for the time described below:
   - If IAT (Intake Air) was less than 50°F (10°C) when the engine was started, drive for 7 minutes.
   - If IAT (Intake Air) was greater than 50°F (10°C) when the engine was started, drive for 3 minutes.

b. Drive the vehicle at 35 – 45 mph (56 – 72 km/h) for approximately 7 minutes.

NOTE:
- **Drive with smooth throttle operation.**
- **Avoid sudden acceleration.**
- **Avoid sudden deceleration as much as possible with the throttle fully closed.**

If readiness status does not switch to “complete,” ensure preconditions are met, turn the ignition OFF, then repeat steps “a” and “b.”

NOTE:
The readiness status may not switch to “complete” after the first drive pattern trip if a Pending Code has been set (first trip for a two–trip DTC).
- **Pending Codes are available from the DTC Info Menu in Enhanced OBDII.**
- **Pending Codes indicate a POTENTIAL problem was detected. A second trip is needed to confirm the DTC prior to diagnosis.**
- **Once a second trip is completed, a current DTC will be stored.**

Readiness Monitor Drive Patterns: Catalyst Monitors (Continued)

DRIVE PATTERN NO. 4: Catalyst Monitor (AF Sensor Type)

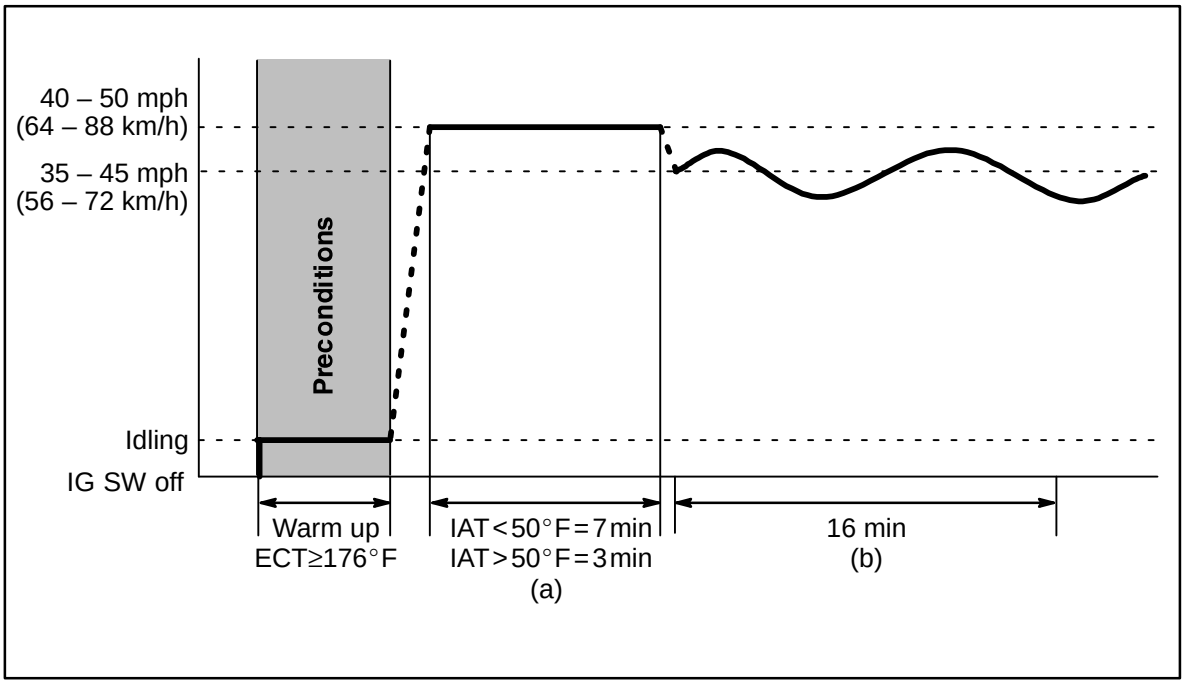

Preconditions

The monitor will not run unless:

- MIL is OFF.
- ECT (Coolant Temp) is 176°F (80°C) or greater.
- IAT (Intake Air) is 14°F (–10°C) or greater.*

*** For 2002 MY and later vehicles:** The readiness test can be completed in cold ambient conditions (less than 14°F / –10°C), if the drive pattern is repeated a second time after cycling the ignition OFF.

Drive Pattern Procedure

Connect the OBDII Scantool to DLC3 to check monitor status and preconditions.

Note the IAT (Intake Air) value during engine startup. The driving time must be adjusted during step “a” based upon IAT (Intake Air) value at startup.

a. Drive the vehicle at 40 – 55 mph (64 – 88 km/h) for the time described below:
   - If IAT (Intake Air) was less than 50°F (10°C) when the engine was started, drive for 7 minutes.
   - If IAT (Intake Air) was greater than 50°F (10°C) when the engine was started, drive for 3 minutes.

b. Drive the vehicle allowing speed to fluctuate between 35 – 45 mph (56 – 72 km/h) for about 16 minutes.

NOTE:
- **Drive with smooth throttle operation.**
- **Avoid sudden acceleration.**
- **Avoid sudden deceleration as much as possible with the throttle fully closed.**

If readiness status does not switch to “complete,” ensure preconditions are met, turn the ignition OFF, then repeat steps “a” and “b.”

NOTE:
The readiness status may not switch to “complete” after the first drive pattern trip if a Pending Code has been set (first trip for a two–trip DTC).
- **Pending Codes are available from the DTC Info Menu in Enhanced OBDII.**
- **Pending Codes indicate a POTENTIAL problem was detected. A second trip is needed to confirm the DTC prior to diagnosis.**
- **Once a second trip is completed, a current DTC will be stored.**

Readiness Monitor Drive Patterns: EVAP Monitors

DRIVE PATTERN NO. 5: EVAP Monitor (Internal Pressure Monitor/Non–Intrusive Type)

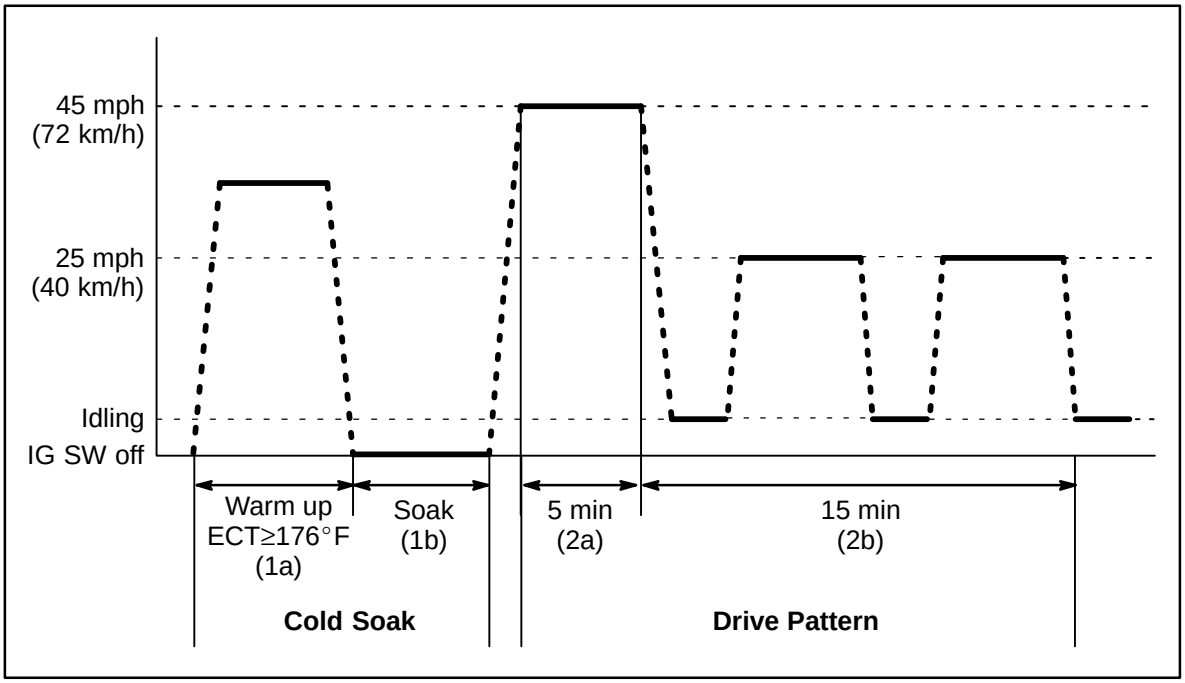

Cold Soak Preconditions

The monitor will not run unless:

- MIL is OFF.
- Fuel level is between 1/2 to 3/4 full.
- Altitude is 7800 feet (2400 m) or less.

IMPORTANT:

A cold soak must be performed prior to conducting the drive pattern to complete the Internal Pressure Readiness Monitor.

Cold Soak Procedure

1a. Start the engine and allow ECT (Coolant Temp) to reach 176°F (80°C) or greater. (This can be done by letting the engine idle or by driving the vehicle.)

1b. Let the vehicle cold soak for 8 hours or until the difference between IAT (Intake Air) and ECT (Coolant Temp) is less than 13°F (7°C).

■ **Example 1**

- ECT (Coolant Temp) = 75°F (24°C).
- IAT (Intake Air) = 60°F (16°C).
- Difference between ECT (Coolant Temp) and IAT (Intake Air) is 15°F (8°C).
  - ⇒ The monitor will not run because the difference between ECT (Coolant Temp) and IAT (Intake Air) is greater than 13°F (7°C).

■ **Example 2**

- ECT (Coolant Temp) = 70°F (21°C).
- IAT (Intake Air) = 68°F (20°C).
- Difference between ECT (Coolant Temp) and IAT (Intake Air) is 2°F (1°C).
  - ⇒ The monitor will run because the difference between ECT (Coolant Temp) and IAT (Intake Air) is less than 13°F (7°C).

Readiness Monitor Drive Patterns: EVAP Monitors (Continued)

Drive Pattern Preconditions

The monitor will not run unless:

- MIL is OFF.
- Fuel level is between 1/2 to 3/4 full.
- Altitude is 7800 feet (2400 m) or less.
- ECT (Coolant Temp) is between 40°F and 95°F (4.4°C – 35°C).
- IAT (Intake Air) is between 40°F and 95°F (4.4°C – 35°C).
- Cold Soak Procedure has been completed.

> **NOTE:**
> **Before starting the engine, the difference between ECT (Coolant Temp) and IAT (Intake Air) must be less than 13°F (7°C). (Refer to Examples 1 and 2 on previous page.)**

Drive Pattern Procedure

- Connect the OBDII Scantool to DLC3 to check monitor status and preconditions.
- Release the pressure in the fuel tank by removing and then reinstalling the fuel tank cap.
- Start the engine and begin driving as directed.

> **NOTE:**
> - **Do not turn the ignition off until the drive pattern is complete.**
> - **Drive on smooth roads to reduce excessive fuel sloshing.**

2a. Start the engine and as soon as safely possible begin driving at approximately 45 mph (72km/h) for 5 minutes. (See illustration on previous page.)

2b. Drive the vehicle at approximately 25 mph (40 km/h) for 15 minutes and include a minimum of two stops for approximately 30 seconds. (See illustration on previous page.)

The monitor should complete within approximately 20 minutes. If it does not, ensure preconditions are met and repeat the drive pattern process beginning with the Cold Soak Procedure.

> **NOTE:**
> **The readiness status may not switch to "complete" after the first drive pattern trip if a Pending Code has been set (first trip for a two–trip DTC).**
> - **Pending Codes are available from the DTC Info Menu in Enhanced OBDII.**
> - **Pending Codes indicate a POTENTIAL problem was detected. A second trip is needed to confirm the DTC prior to diagnosis.**
> - **Once a second trip is completed, a current DTC will be stored.**

Readiness Monitor Drive Patterns: EVAP Monitors (Continued)

DRIVE PATTERN NO. 6: EVAP Monitor (Vacuum Pressure Monitor/Intrusive Type)

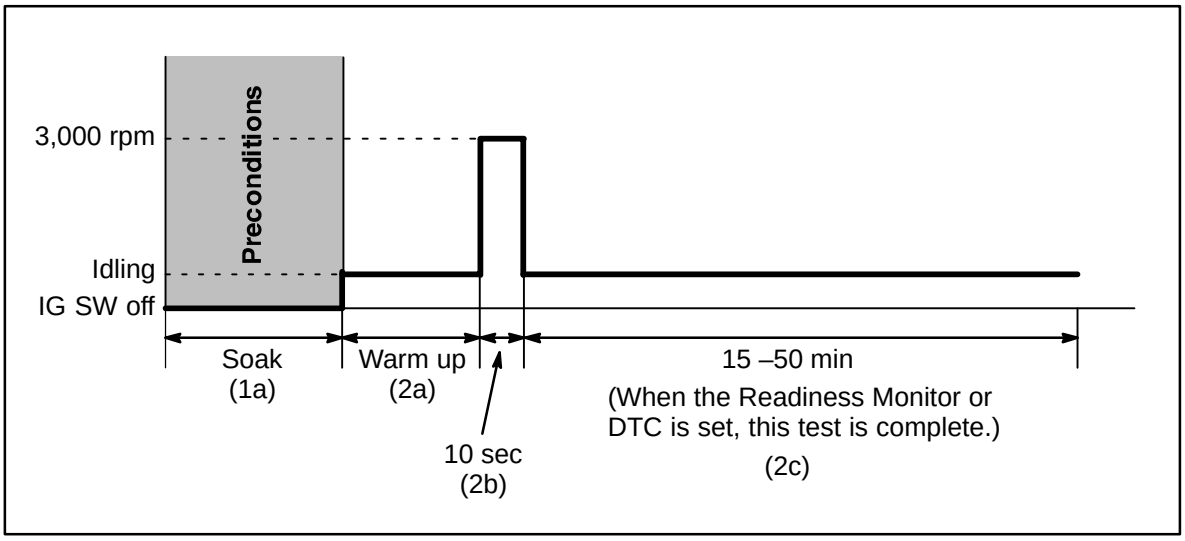

Cold Soak Preconditions

The monitor will not run unless:

- MIL is OFF.
- Fuel level is between 1/2 to 3/4 full.
- Altitude is 7800 feet (2400 m) or less.

Cold Soak Procedure

1a. Let the vehicle cold soak for 8 hours or until the difference between IAT (Intake Air) and ECT (Coolant Temp) is less than 13°F (7°C).

■ **Example 1**

- ECT (Coolant Temp) = 75°F (24°C).
- IAT (Intake Air) = 60°F (16°C).
- Difference between ECT (Coolant Temp) and IAT (Intake Air) is 15°F (8°C).

  ⇒ The monitor will not run because the difference between ECT (Coolant Temp) and IAT (Intake Air) is greater than 13°F (7°C).

■ **Example 2**

- ECT (Coolant Temp) = 70°F (21°C).
- IAT (Intake Air) = 68°F (20°C).
- Difference between ECT (Coolant Temp) and IAT (Intake Air) is 2°F (1°C).

  ⇒ The monitor will run because the difference between ECT (Coolant Temp) and IAT (Intake Air) is less than 13°F (7°C).

Readiness Monitor Drive Patterns: EVAP Monitors (Continued)

Drive Pattern Preconditions

The monitor will not run unless:

- MIL is OFF.
- Fuel level is between 1/2 to 3/4 full.
- Altitude is 7800 feet (2400 m) or less.*
- ECT (Coolant Temp) is between 40°F and 95°F (4.4°C – 35°C).
- IAT (Intake Air) is between 40°F and 95°F (4.4°C – 35°C).*
- Cold Soak Procedure has been completed.

*** For 2002 MY and later vehicles:** The readiness test can be completed in cold ambient conditions (less than 40°F / 4.4°C) and/or at high altitudes (more than 7800 feet / 2400 m) if the complete drive pattern (including Cold Soak) is repeated a second time after cycling the ignition OFF.

NOTE:

Before starting the engine, the difference between ECT (Coolant Temp) and IAT (Intake Air) must be less than 13°F (7°C). (Refer to Examples 1 and 2 on previous page.)

Drive Pattern Procedure

- Connect the OBDII Scantool to DLC3 to check monitor status and preconditions.
- Release the pressure in the fuel tank by removing and then reinstalling the fuel tank cap.

2a. Start the engine and allow it to idle until ECT (Coolant Temp) is 167°F (75°C) or greater. (See illustration on previous page.)

2b. Race the engine at 3,000 rpm for approximately 10 seconds. (See illustration on previous page.)

2c. Allow the engine to idle with the A/C ON (to create a slight load) for 15 – 50 minutes. (See illustration on previous page.)

NOTE:

If the vehicle is not equipped with A/C put a slight load on the engine by doing the following:

- **Securely set the parking brake.**
- **Block the drive wheels with wheel chocks.**
- **Allow the vehicle to idle in drive for 15 – 50 minutes.**

NOTE:

The readiness status may not switch to "complete" after the first drive pattern trip if a Pending Code has been set (first trip for a two–trip DTC).

- **Pending Codes are available from the DTC Info Menu in Enhanced OBDII.**
- **Pending Codes indicate a POTENTIAL problem was detected. A second trip is needed to confirm the DTC prior to diagnosis.**
- **Once a second trip is completed, a current DTC will be stored.**

Readiness Monitor Drive Patterns: EVAP Monitors (Continued)

DRIVE PATTERN NO. 7: EVAP Monitor (Without Leak Detection)

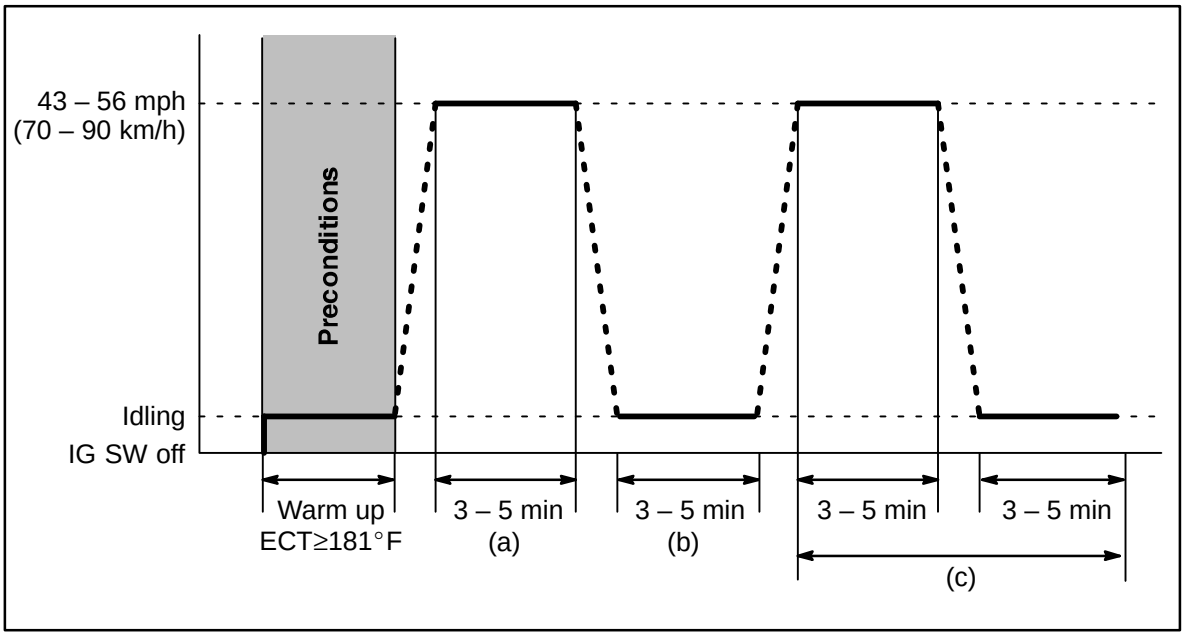

Preconditions

The monitor will not run unless:

- MIL is OFF.
- Altitude is 7800 feet (2400 m) or less.
- ECT (Coolant Temp) is 181°F (83°C) or greater.
- IAT (Intake Air) is 41°F (5°C) or greater.

Drive Pattern Procedure

Connect the OBDII Scantool to DLC3 to check monitor status and preconditions.

a. Drive the vehicle at 43 – 56 mph (70 – 90 km/h) for a period of 3 – 5 minutes.

NOTE:
- **Do not allow the Throttle Position (TP) to exceed 30%.**
- **Drive with smooth throttle operation and avoid sudden acceleration.**

b. Stop the vehicle and let the engine idle for 3 – 5 minutes.

c. Repeat steps “a” and “b” once.

If readiness status does not switch to “complete,” ensure preconditions are met, turn the ignition OFF, then repeat steps “a” through “c.”

NOTE:
The readiness status may not switch to “complete” after the first drive pattern trip if a Pending Code has been set (first trip for a two–trip DTC).
- **Pending Codes are available from the DTC Info Menu in Enhanced OBDII.**
- **Pending Codes indicate a POTENTIAL problem was detected. A second trip is needed to confirm the DTC prior to diagnosis.**
- **Once a second trip is completed, a current DTC will be stored.**

Readiness Monitor Drive Patterns: Oxygen Monitors

DRIVE PATTERN NO. 8: Oxygen Sensor Monitor (Front and Rear O2S System)

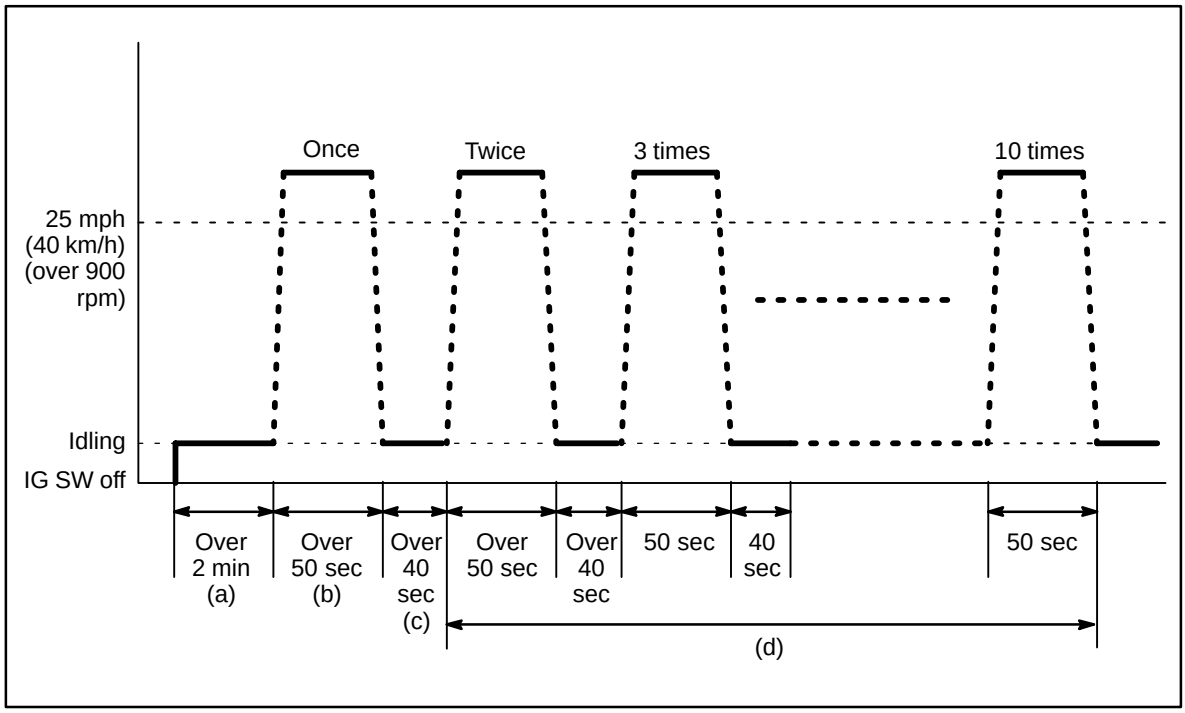

Preconditions

The monitor will not run unless:

- MIL is OFF.

Drive Pattern Procedure

Connect the OBDII Scantool to DLC3 to check monitor status and preconditions.

a. Start the engine and allow it to idle for 2 minutes or more.

b. Drive the vehicle at 25 mph (40 km/h) or more for at least 50 seconds. Be sure engine speed remains above 900 rpm.

c. Stop the vehicle and allow the engine to idle for 40 seconds or more.

d. Perform steps “b” and “c” ten times.

If readiness status does not switch to “complete,” ensure preconditions are met, turn the ignition OFF, then repeat steps “a” through “d.”

NOTE:

The readiness status may not switch to “complete” after the first drive pattern trip if a Pending Code has been set (first trip for a two–trip DTC).

- **Pending Codes are available from the DTC Info Menu in Enhanced OBDII.**
- **Pending Codes indicate a POTENTIAL problem was detected. A second trip is needed to confirm the DTC prior to diagnosis.**
- **Once a second trip is completed, a current DTC will be stored.**

Readiness Monitor Drive Patterns: Oxygen Monitors (Continued)

DRIVE PATTERN NO. 9: Oxygen/Air Fuel Ratio Sensor Monitor (Front AF Sensor and Rear O2S System)

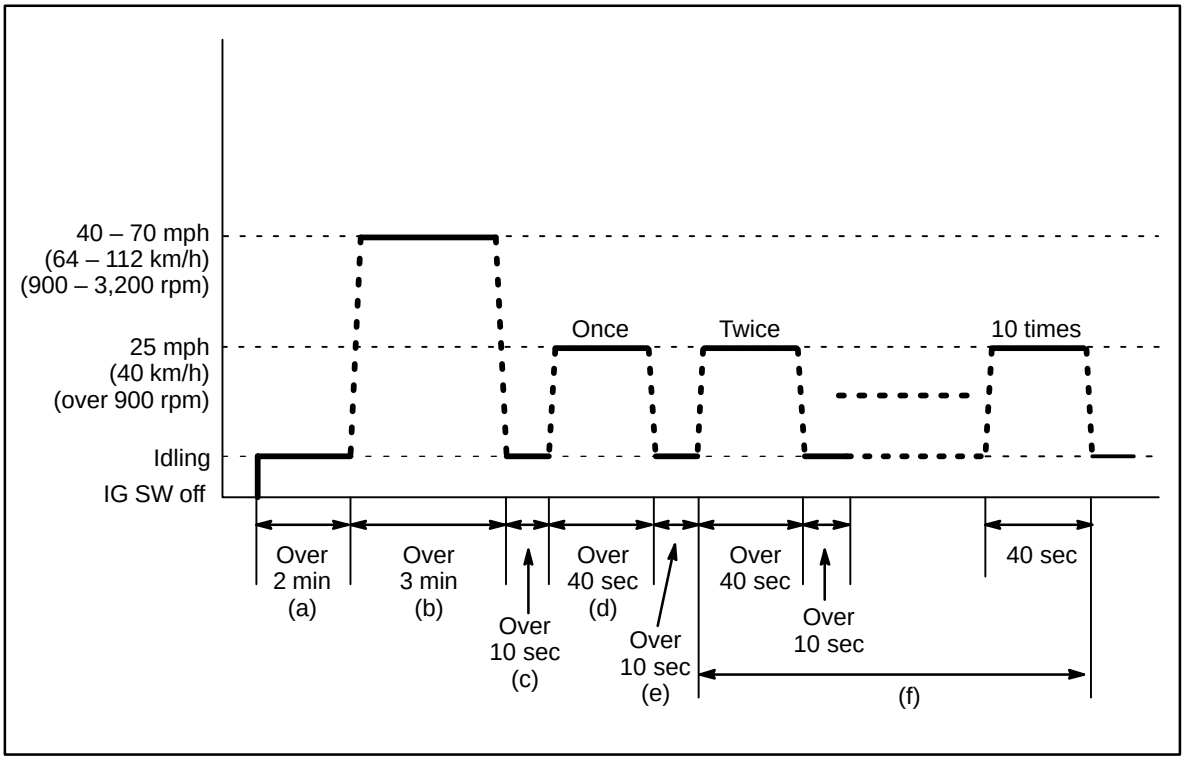

Preconditions

The monitor will not run unless:

- MIL is OFF.

Drive Pattern Procedure

Connect the OBDII Scantool to DLC3 to check monitor status and preconditions.

a. Start the engine and allow it to idle for 2 minutes or more.

b. Drive the vehicle at 40 – 70 mph (64 – 112 km/h) or more for at least 3 minutes. Be sure to maintain engine speed between 900 and 3,200 rpm.

c. Stop the vehicle and allow the engine to idle for 10 seconds or more.

d. Drive the vehicle at 25 mph (40 km/h) for at least 40 seconds or more. Be sure to maintain engine speed above 900 rpm.

e. Stop the vehicle and allow the engine to idle for 10 seconds or more.

f. Perform steps “d” and “e” ten times.

If readiness status does not switch to “complete,” ensure preconditions are met, turn the ignition switch OFF, then repeat steps “a” through “f.”

NOTE:

The readiness status may not switch to “complete” after the first drive pattern trip if a Pending Code has been set (first trip for a two–trip DTC).

- **Pending Codes are available from the DTC Info Menu in Enhanced OBDII.**
- **Pending Codes indicate a POTENTIAL problem was detected. A second trip is needed to confirm the DTC prior to diagnosis.**
- **Once a second trip is completed, a current DTC will be stored.**

Readiness Monitor Drive Patterns: Oxygen Monitors (Continued)

DRIVE PATTERN NO. 10: Oxygen/AF Sensor Heater Monitor

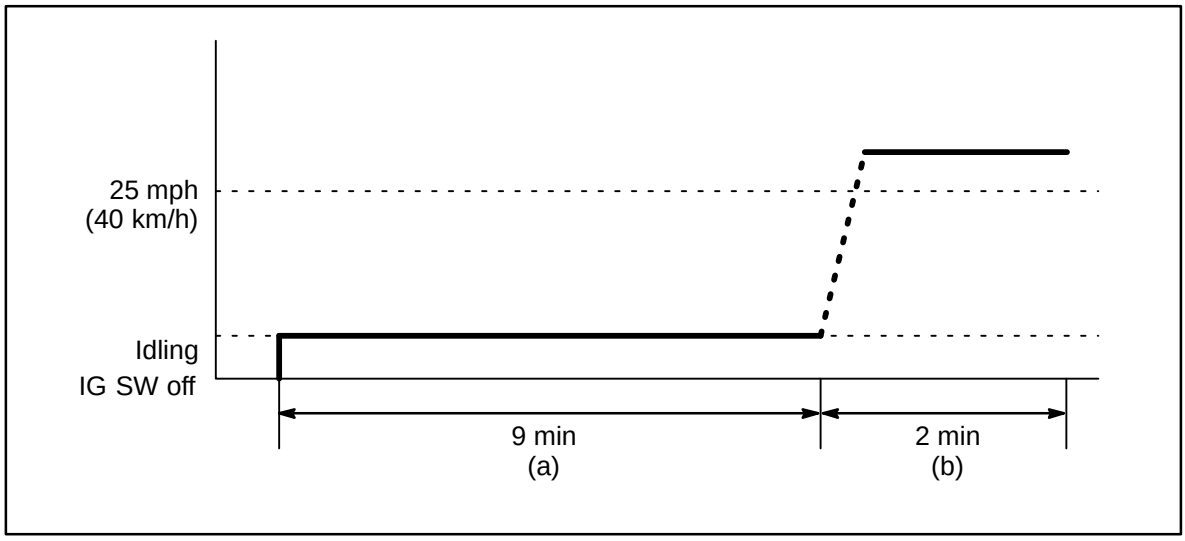

Preconditions

The monitor will not run unless:

- MIL is OFF.

Drive Pattern Procedure

Connect the OBDII Scantool to DLC3 to check monitor status and preconditions.

a. Start the engine and allow it to idle for 9 minutes.

b. Drive the vehicle at 25 mph (40 km/h) or more for at least 2 minutes.

If readiness status does not switch to “complete,” ensure preconditions are met, turn the ignition OFF, then repeat steps “a” and “b.”

NOTE:

The readiness status may not switch to “complete” after the first drive pattern trip if a Pending Code has been set (first trip for a two–trip DTC).

- **Pending Codes are available from the DTC Info Menu in Enhanced OBDII.**
- **Pending Codes indicate a POTENTIAL problem was detected. A second trip is needed to confirm the DTC prior to diagnosis.**
- **Once a second trip is completed, a current DTC will be stored.**

LEXUS

TECHNICAL SERVICE INFORMATION

REF: ENGINE

NO: EG004–96

DATE: OCTOBER 11, 1996

MODEL: ALL MODELS

Title **UNDERCOATING ON OXYGEN SENSORS**

During vehicle processing by Dealers, care must be taken to avoid applying undercoating in the area surrounding the Oxygen Sensors. Application of undercoating on or near the Oxygen Sensors can cause insufficient air to flow around the sensor, and inaccurate information storage by the ECM. If this condition occurs, the Malfunction Indicator Light (MIL) may illuminate.

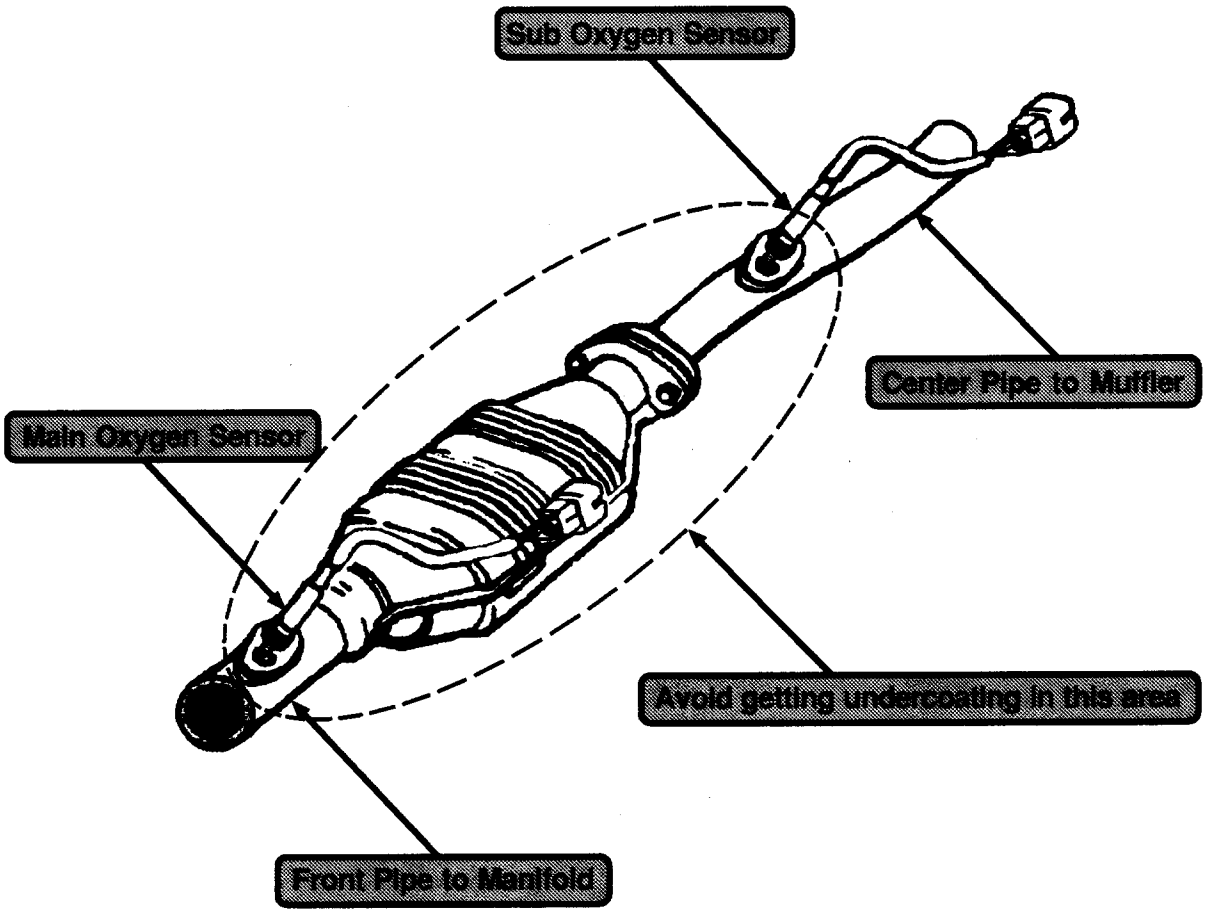

Title:

MIL 'ON' – P0116 SET IN MEMORY (ECM)

Models:

'97 LX 450

Introduction

Some '97 LX450s may exhibit a MIL "ON" condition (DTC code P0116 – "engine coolant temperature malfunction") under certain normal operating conditions. To improve the operating logic of the coolant temperature circuit, the engine ECM has been changed.

> **NOTE:**
> **When diagnosing a vehicle with this condition, check all related components according to the Repair Manual. If all parts pass testing, the ECM logic may be too sensitive and require replacement.**

Production Change Information

- The new ECM was installed in production after **VIN JT6HJ88**V0169421**.

Parts Information

PREVIOUS PART NUMBERS	NEW PART NUMBER	PART NAME
89661–60650	89661–60652	Module, Engine Control
89661–60651		

LEXUS

TECHNICAL SERVICE INFORMATION

REF: ENGINE

NO: EG005–96

DATE: DECEMBER 20, 1996

MODEL: LX 450

Title **LX 450 (1FZ–FE) THERMOSTAT GASKET LEAK**

To improve sealing performance of the Thermostat Gasket after engine starting in extreme low ambient temperatures, the shape of the gasket has been changed as shown.

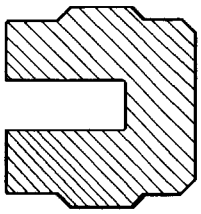

Previous

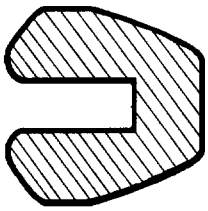

New

PRODUCTION EFFECTIVE:

VIN	ENGINE
JT6HJ88**T0144383	0242556

PARTS INFORMATION:

PREVIOUS PART NUMBER	NEW PART NUMBER	PART NAME	QTY
16346–17010	16346–66020	Gasket, Thermostat	1

NOTE: Use only the New Part Number for LX 450 (1FZ–FE). Previous Part Number will remain available for other applications.

WARRANTY INFORMATION:

OPCODE	DESCRIPTION	TIME	OPN	T1	T2
161101	1FZ–FE Thermostat Gasket	0.7	16346–17010	66	51

Applicable Warranty Coverage: 4 Years or 50,000 Miles.

Title **BATTERY MAINTENANCE FOR IN–STOCK VEHICLES**

A battery in a stored vehicle is subject to conditions which can reduce its performance and life. These conditions include storage period, temperature, parasitic drain, and battery load. Because of these factors, battery inspection and maintenance are required in order to ensure proper operation and optimal battery life.

As a matter of policy, Lexus does not provide battery warranty coverage for discharged and/or failed batteries due to lack of maintenance; it is the dealer's responsibility to maintain the specified state of charge of the vehicle's battery while in stock.

BATTERY MAINTENANCE RECOMMENDATIONS:

1. A monthly battery inspection is required under normal conditions. If your dealership is located in an area subject to extreme temperatures (hot or cold), periodic maintenance may need to be performed on a more frequent basis. When maintenance requires removal of filler plugs on vehicles with "maintenance free" batteries, new labels are available via the following part numbers:

PART NUMBER	QUANTITY	APPLICABLE BATTERY SIZE
28898–50130	2	80D26L
28898–50140	2	75D31L and 95D31L

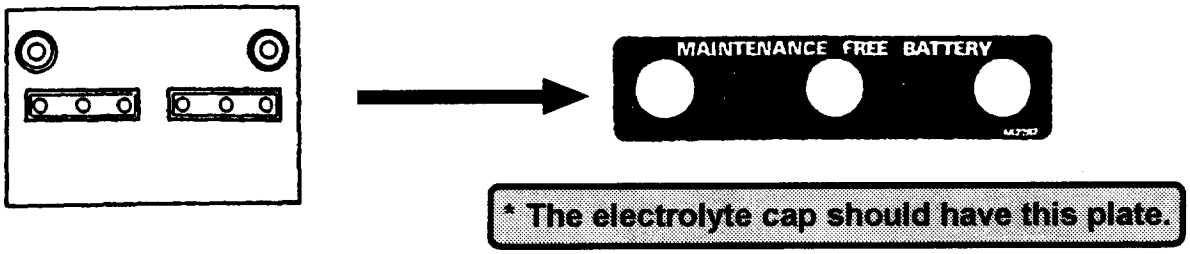

BATTERY MAINTENANCE RECOMMENDATIONS (Cont'd):

2. To reduce battery drain during storage of in–stock vehicles, the dome light fuse of each vehicle should be removed. It is recommended that the fuse remain disconnected until time of delivery. This procedure can reduce battery discharge 60–80 percent. **Additionally, for vehicles in storage for 30 days or more, the negative battery cable should always be disconnected to further reduce battery discharge.**

NOTE 1: For your reference, the electrical systems made inoperative by removing the dome light fuse, are indicated in the appropriate Electrical Wiring Diagram.

NOTE 2: Additional battery maintenance information is available in the Lexus Warranty Reference And Administration Procedures Manual (Policy # 4.10 pages 1–4).

Two test procedures are currently available for evaluating battery performance. These include:

1. Open–Circuit Voltage Test Procedure

2. Specific Gravity Test Procedure

OPEN–CIRCUIT VOLTAGE TEST PROCEDURE:

1. If the battery has recently been charged or if the engine has been run in the last hour, there will be a surface charge on the battery. To remove the surface charge, turn on the headlights for two minutes.

NOTE: Turn off headlights before proceeding with test.

2. With the key out of the ignition, all doors closed, and all electrical accessories off, connect the voltmeter across the battery terminals.

3. Read the voltmeter.

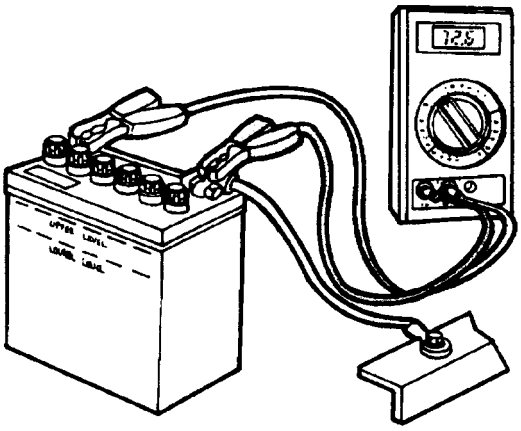

Compare measured voltage to open circuit voltage chart:

OPEN CIRCUIT VOLTAGE (OCV) CHART

RESULTS	OPEN CIRCUIT VOLTAGE	% STATE OF CHARGE	EQUIVALENT SPECIFIC GRAVITY
OK	12.65 Volts	100%	1.265 @ 80°F
	12.40 Volts	75%	1.225 @ 80°F
NG	Less Than 12.40 Volts	< = 50%	1.190 @ 80°F

TEST RESULTS:

1. A fully charged battery will have an open–circuit voltage of at least 12.6 volts.

2. The minimum acceptable voltage is 12.4 volts. If the reading is less than 12.4 volts, charging is necessary. Use the slow charging procedure described below.

CHARGING PROCEDURE:

1. If the test results indicate a charge is necessary, a slow–constant 10–amp or less charge rate is recommended until the battery reaches a full state of charge. Be sure to periodically check and maintain the proper electrolyte levels during charging.

CAUTION: Insure that the charger is turned off before connecting or disconnecting the leads. Always connect the negative lead last. When disconnecting, always disconnect the negative lead first.

NOTE: For additional information on battery inspection and testing procedures, see “Battery/Starter Circuit Inspection And Testing Procedures” in the “Technicians Handbook For Electrical Circuits And Diagnosis Course” (MDC # 00246–42917).

SPECIFIC GRAVITY TEST PROCEDURE:

1. Remove the vent caps or plugs from the battery cells.

2. Take the specific gravity readings with a temperature corrected hydrometer. Follow the procedure described by the manufacturer of your hydrometer.

3. Record the specific gravity of each cell.

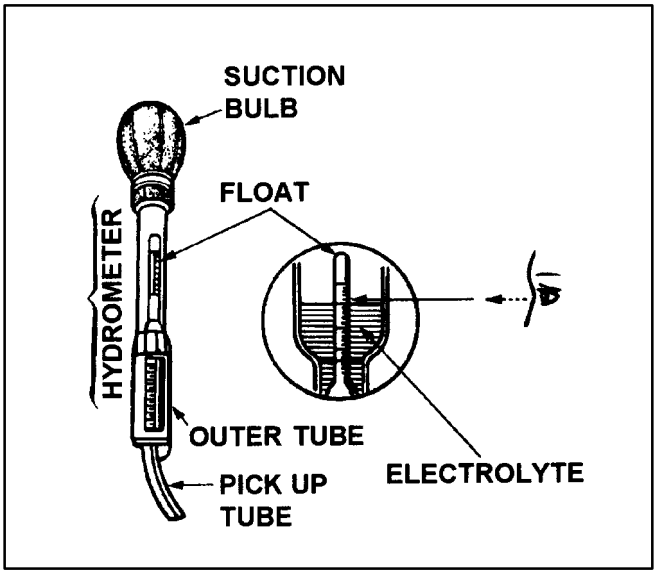

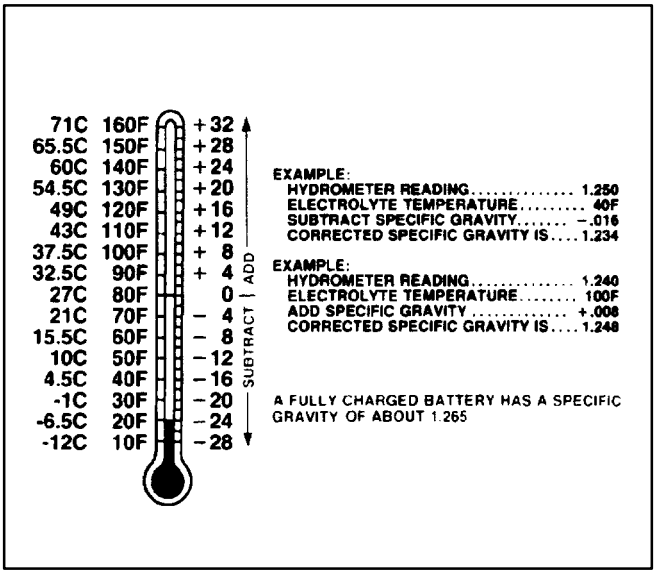

TEST RESULTS:

1. A fully charged battery will have a specific gravity reading of approximately 1.265 at 80°F.

2. The minimum standard for this test is a specific gravity reading of 1.190. If the reading is less than 1.190, charging is necessary. Use the slow charging procedure described in this TSIB.

3. A difference of 0.050 or more between highest and lowest cell readings indicates a problem battery. Should you encounter this situation, attempt one recharge using the slow charging procedure described in this TSIB. Allow the battery to stabilize at least 20 minutes after the charge cycle is complete. Recheck the specific gravity of each cell. If the deviation in cell readings still exceeds 0.050, the battery must be replaced.

4. After battery service is complete, reinstall the battery caps/plugs and replace the plug labels as applicable.

Title:
CIGARETTE LIGHTER SERVICE
Models:
All Model

Introduction

When receiving customer complaints to repair the lighter or lighter socket, please carefully investigate the cause of the failure to prevent further occurrences. If the customer uses the wrong size lighter element or power accessory plug, damage may occur to the lighter socket. When applicable, instruct the customer to replace the lighter element with original equipment components or to use an appropriate sized accessory plug. Dimensional information included within this document will instruct you on component specifications.

Service Procedure

1. Determine if the lighter is original equipment by using the specifications shown.
   a. If the vehicle has a non–genuine lighter element, it has the possibility to cause a short circuit between the lighter element and the lighter socket, which can result in an open fuse.
   b. A non–genuine lighter element may cause a rattle or bend the socket bimetal contacts.
   c. If a non–genuine lighter element is being used, advise the customer to use an original equipment element.

TYPE	DRAWING WITH DIMESIONS	FEATURES
Genuine	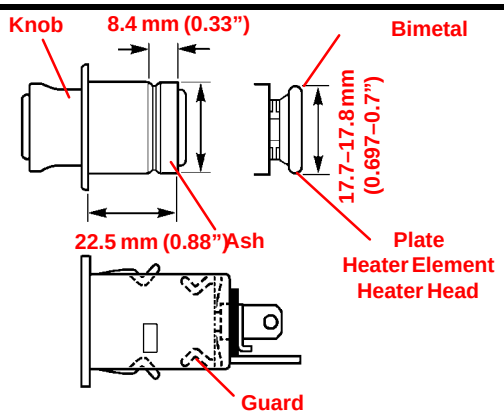	No Problem to use.
Non–Genuine	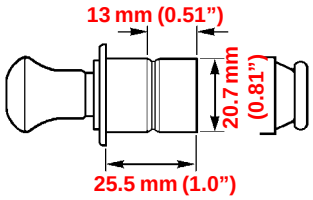	Too long an ash guard will contact bimetal (positive circuit) plate and cause fuse to melt.
	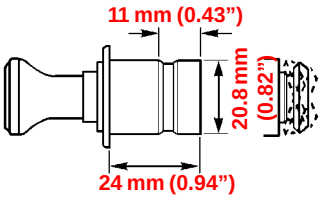	Excessive free play on the heater head which allows contact between heater element, socket body and bimetal plate, will cause fuse to melt.

Service Procedure (Continued)

2. If the lighter element is original equipment and the lighter socket is bent or pulled out of the dash, please ask the customer about the accessory plug being used in the lighter socket.
   a. The attached specifications in the drawing provide the maximum recommended size of accessory plug. If the customer is using an accessory plug larger than recommended, please advise the customer to use a plug of appropriate size.
   b. Using a power plug larger than the given dimensions may damage the lighter socket.
   c. If the vehicle has a power point socket, advise the customer to use this socket instead of the lighter socket.

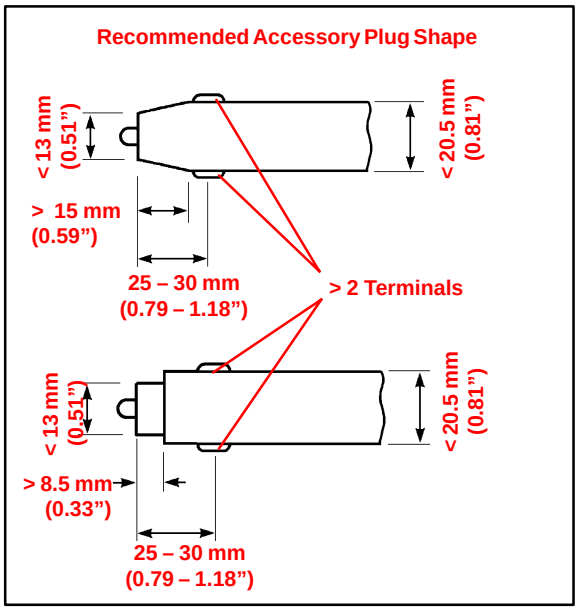

Affected Vehicles

- **All** models, **all** model years

Warranty Information

OP CODE	DESCRIPTION	TIME	OPN	T1	T2
N/A	Not Applicable to Warranty	–	–	–	–

Title **DOME FUSE INSTALLATION DURING PDS ON LX 450**

To minimize battery discharge during transportation and storage the Dome Fuse has been removed at the assembly plant.

INSTALLATION PROCEDURE:

The removed Dome Fuse (10A) is stored in the Relay Block No. 2 Cover in the engine compartment as shown in Figure A.

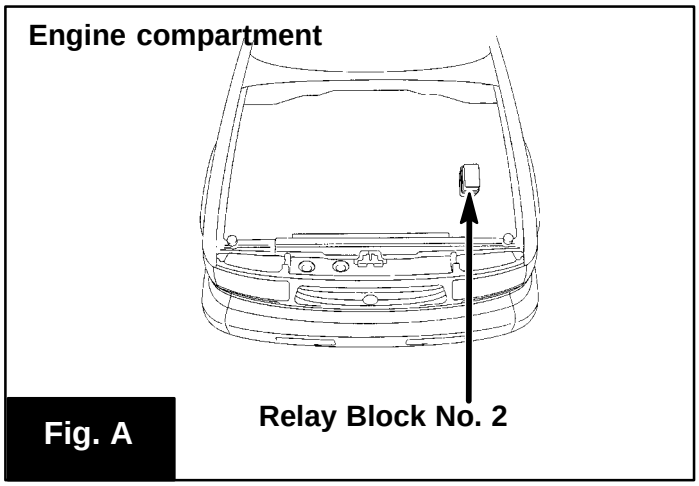

Fig. A

Please install the Dome Fuse in the correct position during Pre–Delivery Service (PDS) as shown in Figure B.

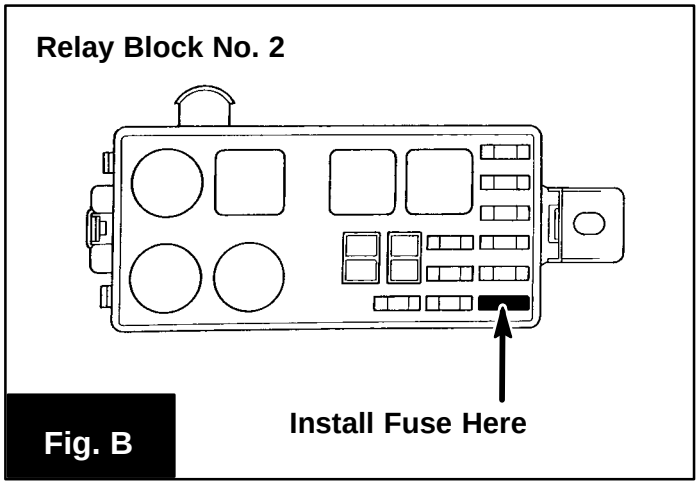

Fig. B

NOTE: If the vehicle is stored at the dealership for a long period of time after PDS, please disconnect the negative battery terminal to prevent battery discharge and refer to TSIB EL95–002 for battery maintenance information.

The following information outlines the two–tone painting scheme used on the 1996 LX 450.

NEW TWO–TONE PAINTING METHOD:

The claddings, bumpers and wheel opening extensions are painted with a different color from the body color to achieve a two–tone painting scheme.

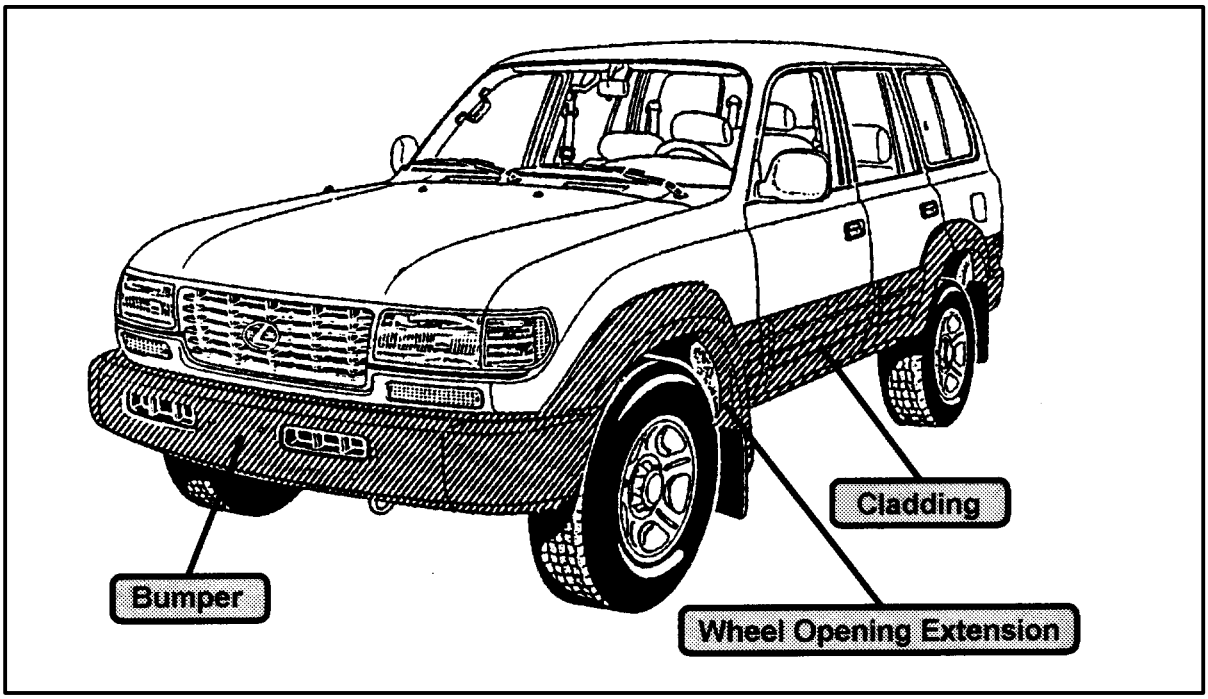

NEW TWO–TONE COLORS:

BODY COLOR	CLADDING COLOR	TWO–TONE NAME
045	UCA46	White/Beige Metallic
1B1	UCA46	Champagne Pearl/Beige Metallic
202	UCA31	Black/Dark Gray Metallic
4M9	UCA46	Cashmere Beige Metallic/Beige Metallic
6M1	UCA31	Dark Emerald Pearl/Dark Gray Metallic

REPAIR PROCEDURE:

Factory painted cladding sub–assemblies are available from Lexus parts supply. If original parts are to be refinished, observe the following precautions during the refinish/drying process:

1. To prevent cladding warpage, firmly hold the cladding in place and keep drying temperature below 50°C (122°F).

2. Since the cladding, wheel opening extensions and bumpers are made of a flexible plastic urethane material, use a 2–part urethane finish paint system with plasticizer for all bumper/cladding repairs.

Title **PAINT REPAIRS ON POLYURETHANE BUMPERS**

BACKGROUND:

Polyurethane bumper covers are formed by forcing liquid plastic material into a mold. Lubricant is added to the mold as a release agent to make it easier to separate the bumper from the mold.

MOLD LUBRICANT CHANGE:

Recently, the mold lubricant (release agent) was changed from a **wax type to a soap type** on OEM supply parts. The wax lubricant was discontinued because wax removal from the bumper surface required the use of trichloroethane.

The new mold lubricant (soap type) is easily removed by using a water based cleaner, such as mild soap and water, and a photochemically non–reactive cleaning agent.

NOTE: Remove wax from wax type lubricant supply parts according to the paint manufacturer's recommendations.

BUMPER IDENTIFICATION:

Supply part bumper covers using Soap Type lubricant were introduced in June 1995. An "N" on the part label identifies the new Soap Type bumpers (see diagram). The "N" identifier on the part number label will be discontinued after July1996.

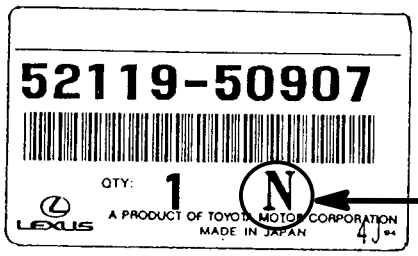

"N" indicates a soap type,
"Blank" indicates a wax type.

STANDARD PROCESS:

Washing → Drying → Sanding → Degreasing → Primer Surfacer → Top Coat

For further details on different paint types and application methods, refer to the paint suppliers' Technical Manual.

Title **1996 PAINT AND REFINISH FORMULA CODES**

The following is a listing of 1996 Lexus paint codes and corresponding refinish formula codes for 8 (eight) refinish paint companies — BASF Glassurit, DuPont Cronar, PPG Industries DBU–Deltron, Sherwin Williams Ultrabase, Sikkens, Spies Hecker, ICI Autocolor and Herberts Standox* (Paint and refinish formula codes are located on page 2).

* **Herberts Standox** uses the Lexus color code number as their paint code identification number.

Example: The Herberts Standox paint code number for Lexus color code 202 (Black Onyx) is 202.

NOTE: The body color code is indicated on the **Certification Label** which is located in the driver's door area as shown below.

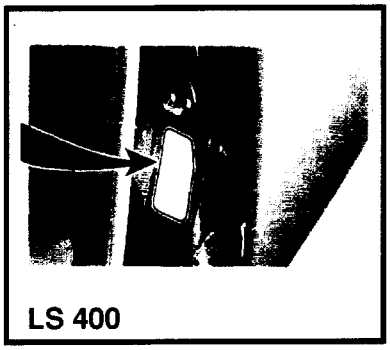
LS 400

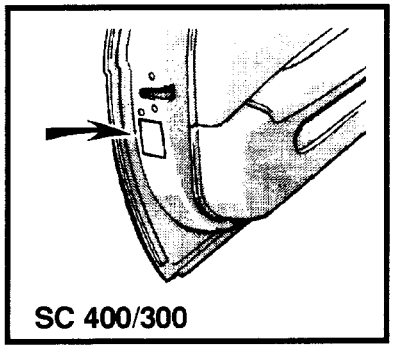
SC 400/300

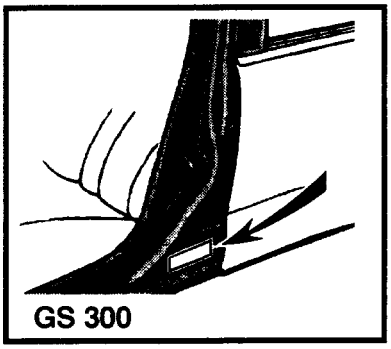
GS 300

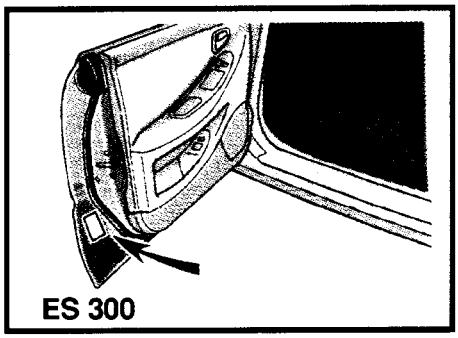
ES 300

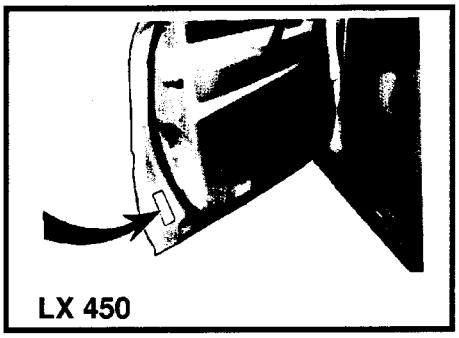
LX 450

Contact Your Local Paint Representative For The Actual Paint Mixing Formulas or For Additional Assistance In Color Matching.

Please Provide A Copy Of This Information To Your Lexus Collision Repair Center.

1996 LEXUS PAINT CODES AND COLOR NAMES:

COLOR CODE	COLOR NAME	BASF	DUPONT	PPG	SHERWIN WILLIAMS	SIKKENS	SPIES–HECKER	ICI AUTOCOLOR
045	White	TOY-045	H8931	90547	38712	LEX-045	16004	NP65
051	Diamond White Pearl	TOY-051	L9246 L9247	90822 90826	42872 42873	LEX-051	98125	PF76B
1A0	Platinum Metallic	TOY-1A0	N9223	4896	49700	LEX-1A0	70809	TD86G
1B1	Champagne Pearl	TOY-1B1	F2061	5252	53074	LEX-1B1	98127	FLT9B
199	Alpine Silver Metallic	TOY-199	L9990	4900	48976	LEX-199	70706	5TX1B
202	Black Onyx	PKG	F0220	9300	01738	LEX-202	72941	TH21B
3K7	Shadow Rose Quartz	TOY-3K7	H9650	4615	46620	LEX-3K7	99745	PM71B
3L2	Renaissance Red	TOY-3L2	L9992	4902	48978	LEX-3L2	30491	5TX3B
3L3	Ruby Pearl	TOY-3L3	F0294	5042	51162	LEX-3L3	30914	6KD3B
3L4	Bordeaux Pearl	TOY-3L4	F1803	5164	52886	LEX-3L4	33135	ARD1B
4K9	Sandstone Beige Metallic	TOY-4K9	N9216	26846	43482	LEX-4K9	98224	2575B
4M9	Cashmere Beige Metallic	TOY-4M9	N9924	4903	49702	LEX-4M9	20261	6ED6B
4N1	Crystal Quartz Metallic	TOY-4N1	F1052	5057	51185	LEX-4N1	80373	7VS8B
6M1	Dark Emerald Pearl	TOY-6M1	W9542	4595	46589	LEX-6M1	99746	PM72B
6M2	Royal Jade Pearl	TOY-6M2	W9513	4476	45930	LEX-6M2	99680	PM41B
6N0	Moonstone Pearl	TOY-6N0	F1053	5049	51187	LEX-6N0	61495	7VT1B
6N9	Ebony Teal Pearl	TOY-6N9	F1054	5050	51189	LEX-6N9	61496	7VT2B
6P2	Classic Green Pearl	TOY-6P2	F1850	5173	52889	LEX-6P2	61953	BAA7B
6P3	Deep Jewel Green Pearl	TOY-6P3	F1805	5166	52887	LEX-6P3	61928	ARD3B
8J5	Midnight Indigo Pearl	TOY-8J5	W9515	4477	45932	LEX-8J5	99678	PM42B
8K0	Nightshadow Pearl	TOY-8K0	N9925	4910	49707	LEX-8K0	50887	6ED7B
8L1	Star Sapphire Pearl	TOY-8L1	F1055	5052	51191	LEX-8L1	53765	7VT3B
928	Amethyst Mist Metallic	TOY-928	F1034	5054	51190	LEX-928	61409	7PP4B
929	Blackberry Pearl	TOY-929	F1056	5055	51192	LEX-929	40457	7VT4B

1996 LEXUS CLADDING CODES AND COLOR NAMES:

CLADDING CODE (Paint Code)	CLADDING COLOR NAME	BASF	DUPONT	PPG	SHERWIN WILLIAMS	SIKKENS	SPIES–HECKER	ICI AUTO-COLOR
LS 400								
UCA29 (051)	Warm Silver Metallic	TOY-A29	H9399	35075	44105	LEX9403	99418	5SB2B 5SB3G
UCA31 (202 & 6N9)	Dark Gray Metallic	TOY-A31	H9398	35060	44157	LEX9401	99454	2759B
UCA32 (8L1)	Dark Blush Gray Metallic	TOY-A32	K9304	35086	44155	LEX9402	99413	2760B
UCA6N0 (6P3)	Medium Gray Metallic	TOY-6N0	F1053	5049	51187	LEX-6N0	61495	7VT1B
UCA75 (199)	Gray Silver Metallic	TOY-A75	F1113	35972	51183	LEX9417	72463	7VT5B
UCA76 (6N0)	Medium Gray Metallic	TOY-A76	F1114	35973	51188	LEX9418	72464	7VT6B
UCA77 (4M9)	Beige Metallic	TOY-A77	F1115	27888	51184	LEX9419	20556	7VT7B
UCA78 (4N1 & 929)	Dark Taupe Metallic	TOY-A78	F1116	27888	51186	LEX9420	80353	7VV1B
ES 300								
UCA138 (202)	Warm Dark Gray Metallic	TOY-A138	N8118	33694	32876	LEX138	70700	TH218
UCA3K2 (3L3)	Dark Red Cladding	TOY-3K2	F2203	S2133	46596	LEX9426	33461	2BG6B
UCA45 (6P2 & 8K0)	Bluish Gray Metallic	TOY-A45	L9708	35461	46960	LEX9412	92044	2BG5B
UCA46 (051 & 4M9)	Light Grayish Beige Metallic	TOY-A46	H9752	27345	46754	LEX9410	91344	D700B
UCA47 (3K7 & 928)	Dark Gray Purple Metallic	TOY-A47	H9753	35425	46755	LEX9411	91348	D701B
GS 300								
UCA29 (051)	Warm Silver Metallic	TOY-A29	H9399	35075	44105	LEX9403	99418	5SB2B 5SB3G
UCA93 (6N9)	Warm Gray Mica Metallic	TOY-A93	F1899	36215	52999	LEX9423	73489	BGV1B
LX 450								
UCA31 (202 & 6M1)	Dark Gray Metallic	TOY-A31	H9398	35060	44157	LEX9401	99424	2759B
UCA46 (045, 1B1, 4M9)	Light Grayish Beige Metallic	TOY-A46	H9752	27345	46754	LEX9410	91344	D700B

1996 LEXUS PAINT APPLICATIONS:

COLOR CODE	LS 400	GS 300	ES 300	SC 400	SC 300	PAINT TYPE	LX 450	PAINT TYPE
045								8
051						5		
1A0						2		
1B1								9
199						2		
202						1		8
3K7						2		
3L2						7		
3L3		NEW	NEW			2		
3L4				NEW	NEW	2		
4K9						2		
4M9						2		9
4N1						2		
6M1								9
6M2						3		
6N0		NEW				2		
6N9		NEW				4		
6P2			NEW			2		
6P3	NEW					2		
8J5						6		
8K0						2		
8L1		NEW				2		
928						2		
929						2		

PAINT FILM CROSS SECTIONS:

PAINT TYPE #1

Solid Color – Non Clear Coat

Codes: 202*

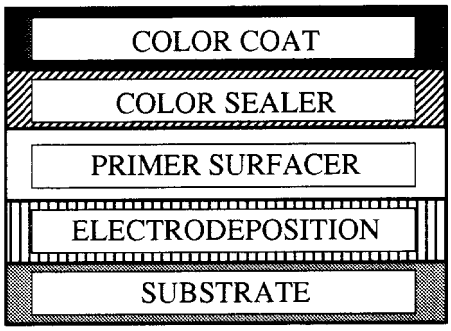

PAINT TYPE #2

Metallic or Mica Color – Clear Coat

Codes: 199, 1A0, 3K7, 3L3, 3L4, 4K9, 4M9*, 4N1, 6N0, 6P2, 6P3, 8K0, 8L1, 928, 929

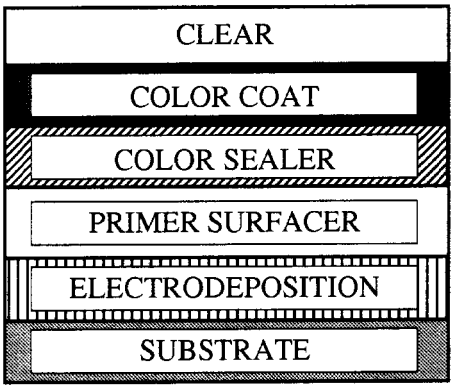

PAINT TYPE #3

MIO Color – Two Clear Coats

Codes: 6M2

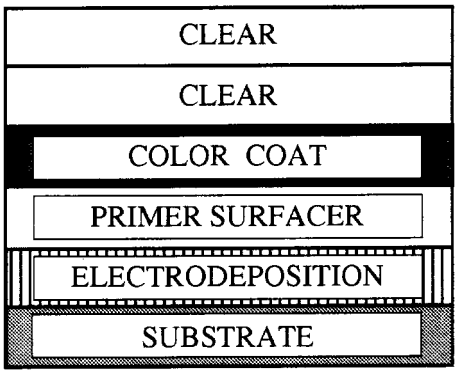

* Except LX 450

PAINT TYPE #4

PIO Color – Two Clear Coats

Codes: 6N9

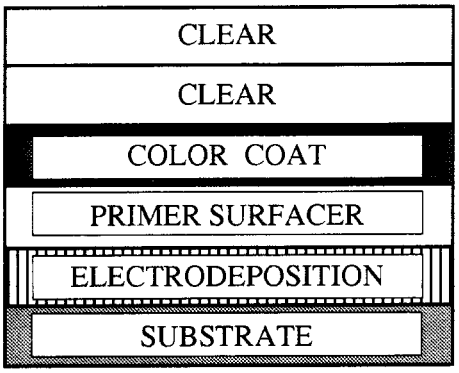

PAINT TYPE #5

Pearl Mica Color – One Clear Coat

Codes: 051

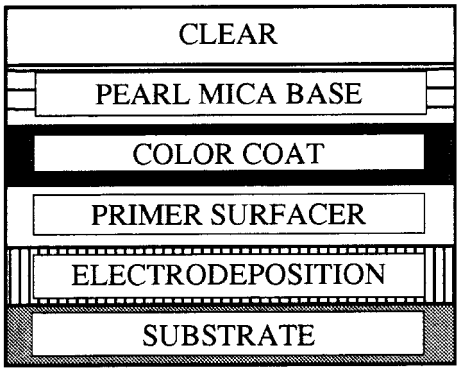

PAINT TYPE #6

Flake Phthalocyanine Color – Two Clear Coats

Codes: 8J5

* FP = Flake Phthalocyanine

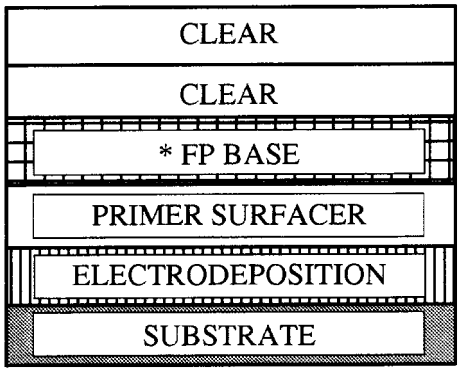

PAINT FILM CROSS SECTIONS:

PAINT TYPE #7
Solid – Tinted Clear Coat
Codes: 3L2

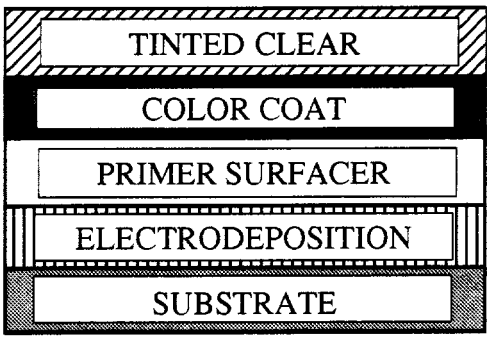

PAINT TYPE #8
Solid Color – Non Clear Coat
Codes: 045, 202**

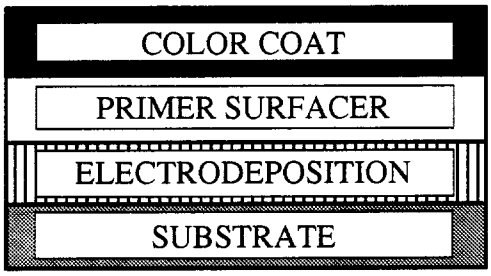

PAINT TYPE #9
Metallic or Mica Color – Clear Coat
Codes: 1B1, 4M9**, 6M1

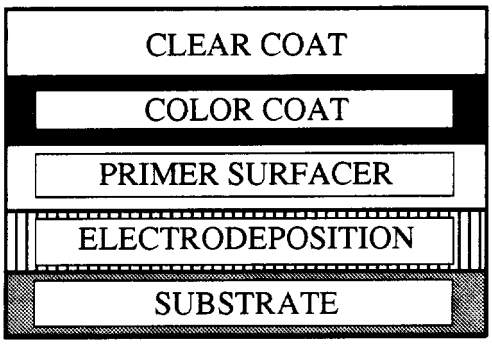

** LX 450 only.

Title **VOLUME 3 TECHNICAL SERVICE INFORMATION BULLETINS & BINDERS**

Lexus Technical Service Information Bulletins (TSIBs) continue to be one of the most current sources of technical information available. To ensure complete access to this reference source, use the following steps:

- **Volume Three** will begin with 1996 Technical Service Information Bulletins.
- Place this bulletin along with all 1996 bulletins into the new binders received with this bulletin.
- Label this new binder "Volume Three" using the labels provided with the binder.
- Additional copies of 1994 through 1996 TSIBs are available to all Lexus Dealerships through the Non–Parts System (MDC NPM System) by using the following Part Number designation:

TSIB Part Number Prefix
TSIB Chapter Code
Chapter Code Sequence Number
Year

00216 – EG 001 – 95

RELATED TSIB PART NUMBERS:

MATERIAL DESCRIPTION	PART NUMBER
1996 TSIB Binder complete with all bulletins issued to date	VOL3
New TSIB and tabs only	00216–00001

If you have any questions concerning Lexus Technical Service Information Bulletins, please contact your District Service and Parts Manager.

LEXUS

Technical Service Information Bulletin

February 28, 1997

Title:

PUBLICATION CORRECTION INFORMATION

Models:

'95 - '97 LS 400, '97 GS 300, '97 ES 300, '97 LX 450

TSIB

PRODUCT GENERAL INFORMATION

PG001-97

Introduction

Corrections have been made in the repair manuals listed below. A brief Description of each correction is provided. For further details, refer to the appropriate Correction Page (attached to this TSIB for Dealer Area Office distribution). These pages should be attached in the corresponding publication.

NOTE:
When ordering a technical publication (i.e. Repair Manual, Electrical Wiring Diagram) From the MDC, any Correction Page(s) associated with that particular Publication, will be automatically included with your order.

Additional Correction Pages are available through the Dealer Support Material Network (MDC NPM System) via the corresponding part numbers from the following table:

Parts Information

PUBLICATION	NUMBER	PAGE(S)	DESCRIPTION	PART NUMBER
'95 LS 400 Repair Manual	RM405U1	AT-74	**AUTOMATIC TRANSMISSION–** *TROUBLESHOOTING.* INSPECTION PROCEDURE– Step 1 was completely revised. Step 2, **P** *1. Remove transmission.* was revised to *1. Remove the oil pan.*	00245-RM405-6012
'96 LS 400 Repair Manual	RM439U1	AT-51	**AUTOMATIC TRANSMISSION–** *TROUBLESHOOTING.* INSPECTION PROCEDURE– Step 1 was completely revised. Step 2, **P** *1. Remove transmission.* was revised to *1. Remove the oil pan.*	00245-RM439-6012
'97 LS 400 Repair Manual	RM514U1	BR-18	**BRAKE** - *FRONT BRAKE.* 5. MEASURE DISC RUNOUT - (B) Text revised to include . . . *grind it on a "on-car" brake lathe.*	00245-RM514-6041
	RM514U	BR-24	**BRAKE** - *FRONT BRAKE (Disc Brake)* 4. MEASURE DISC RUNOUT - Text revised to include . . . *grind it on a "on-car" brake lathe.*	
'97 GS 300 Repair Manual	RM512U	BR-17	**BRAKE** - *FRONT BRAKE.* 3. MEASURE DISC RUNOUT - Text revised to include . . . *grind it on a "on-car" brake lathe.*	00245-RM512-6041

Parts Information (Continued)

PUBLICATION	NUMBER	PAGE(S)	DESCRIPTION	PART NUMBER
'97 GS 300 Repair Manual	RM512U	BR-20	**BRAKE** - *REAR BRAKE (Disc Brake).* REAR BRAKE COMPONENTS INSPECTION AND REPAIR. 3. MEASURE DISC RUNOUT - Text revised to include . . . *grind it on a "on-car" brake lathe.*	00245-RM512-6041
'97 ES 300 Repair Manual	RM511U	DI-248	**BRAKE** - *ANTI-LOCK BRAKE SYSTEM.* DTC - REAR SPEED ROTOR FAULTY - Revised to 33, 34.	00245-RM511-6048
'97 LX 450 Repair Manual	RM515U	BR-10	**BRAKE** - *BRAKE BOOSTER ASSEMBLY.* BRAKE BOOSTER ASSEMBLY - Entire page has been revised from Brake Master Cylinder *Removal* and *Disassembly* to Brake Booster Assembly *Operational Test* and *Components.*	00245-RM515-6055

LEXUS

Technical Service Information Bulletin

January 1, 1999

TSIB

Title:
VOLUME 4 INFORMATION

Models:
All Models

Introduction

Lexus Technical Service Information Bulletins (TSIBs) continue to be one of the most current sources of technical information available. To ensure complete access to this reference source, use the following steps:

- Volume Four will begin with 1999 Technical Service Information Bulletins.
- Place this bulletin along with all 1999 TSIBs into the new binders received with this bulletin.
- Label this new binder “Volume Four“ using the labels provided with the binder.
- Additional copies of 1994 through 1999 TSIBs are available to all Lexus Dealerships through the Non–Parts System (MDC NPM System) by using the following Part Number designation:

TSB Part Number Prefix
TSB Chapter Code
Chapter Code Sequence Number
Year

00216 – EG 001 – 99

Related TSIB Part Numbers

MATERIAL DESCRIPTION	PART NUMBER
1999 TSIB Binder complete with all bulletins issued to date	VOL4
New TSIB Binder and tabs only	00216–00001

Title:

CA/50 STATE CERTIFIED EMISSION CONTROL UNDERHOOD LABEL ORDERING

Models:

All Models

Introduction

It is no longer necessary to fax the CA/50 State Emission Control Label Order Form to TMS. California (CA) and 50 State Certified underhood emission control labels (emission labels) may now be obtained through your dealership Parts Department utilizing standard replacement parts ordering procedures via the TDN. Follow the guidelines outlined in this TSB to ensure proper label application.

Applicable Vehicles

- **All** model year **Lexus Vehicles.**
  We have included a table showing 1995 – 2000 U.S. model numbers and their exhaust emissions certifications. Please continue to consult the Electronic Parts Catalog (EPC) or the parts microfiche for emission label parts numbers.

NOTE:

Although the California Smog Impact Fee has been discontinued, dealers are still required by regulation to verify the correct emission label is installed on the correct vehicle.

REGULATIONS:

The United States Clean Air Act, Title II, Sections 202, 203, 205, and 207 mandates that the emission control label must correctly match the emissions equipment on the vehicle. Any person violating this requirement is subject to applicable State penalties and a Federal civil penalty of no more than $25,000 for each instance.

Personnel at franchised dealerships are authorized to affix such labels to vehicles and are, therefore, subject to this regulation and the attendant penalties.

- **Do not sell the labels over the counter. Always install the label on the vehicle.**
- **Never install a California and/or 50 State Label on a vehicle that is not a California/50 State Emission Certified Vehicle.**
- **Do not install Federal Emission labels on vehicles that are not Federal Emissions Certified.**

Warranty Information

OP CODE	DESCRIPTION	TIME	OPN	T1	T2
N/A	Not Applicable to Warranty	–	–	–	–

Label Ordering Procedure

To ensure that the emission control labels are affixed to the correct vehicle, it is necessary to follow these procedures:

1. Record the Vehicle Identification Number (VIN) from the vehicle requiring a replacement label.

2. Refer to the Vehicle Detail screen in the Lexus Service Inquiry system to determine the correct 4–digit U.S. model number for the VIN in question.

3. Determine the vehicle's emission certification using the U.S. model number and the attached tables.

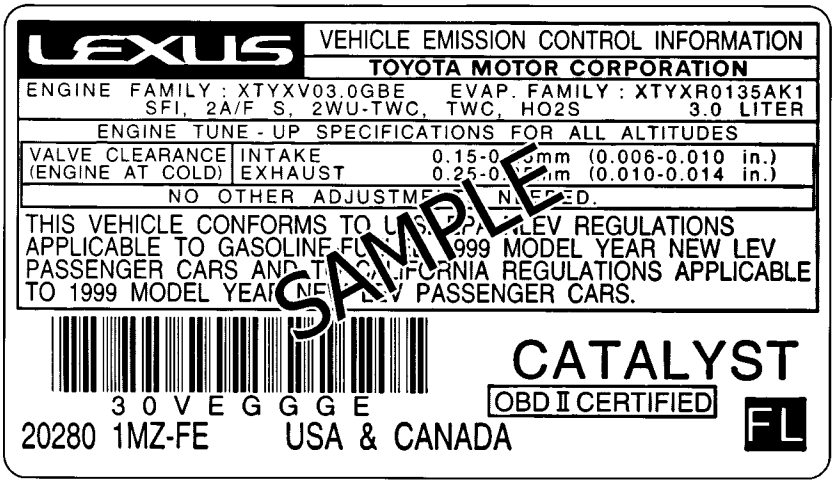

4. Once the emissions equipment information is verified, obtain the part number information by consulting the EPC/microfiche.

5. Order the label through your Parts Department, using normal parts ordering procedures via the TDN.

6. When the part arrives, verify that the emission label matches the emissions equipment on the vehicle. This will ensure the correct label is affixed to the vehicle.

1995 MY Emission Control Labels

Year	Model	CA Emission Model No.	50 States Emission Model No.	Federal Emission Model No.
1995	ES 300	9010	N/A	9000
	SC 300	9210, 9211		9200, 9201
	SC 400	9230		9220
	GS 300	9310		9300
	LS 400	9110		9100

1996 MY Emission Control Labels

Year	Model	CA Emission Model No.	50 States Emission Model No.	Federal Emission Model No.
1996	ES 300	9010	N/A	9000
	SC 300	9210, 9211		9200, 9201
	SC 400	9230		9220
	GS 300	9310		9300
	LS 400	9110		9100
	LX 450	9610		9600

1997 MY Emission Control Labels

Year	Model	CA Emission Model No.	50 States Emission Model No.	Federal Emission Model No.
1997	ES 300	9010	N/A	9000
	SC 300	9210, 9211		9200, 9201
	SC 400	9230		9220
	GS 300	9310		9300
	LS 400	9110		9100
	LX 450	9610		9600

1998 MY Emission Control Labels

Year	Model	CA Emission Model No.	50 States Emission Model No.	Federal Emission Model No.
1998	ES 300	9010	N/A	9000
	SC 300	9210		9200
	SC 400	9230		9220
	GS 300	9310		9300
	GS 400	9330		9320
	LS 400	9110		9100
	LX 470	9630		9620

1999 MY Emission Control Labels

Year	Model	CA Emission Model No.	50 States Emission Model No.	Federal Emission Model No.
1999	ES 300	N/A	9000, 9010	N/A
	SC 300		9200, 9210	
	SC 400		9220, 9230	
	GS 300		9300, 9310	
	GS 400		9320, 9330	
	LS 400		9100, 9110	
	RX 300	9410, 9414	9420, 9424	9400, 9404
	LX 470	N/A	9620, 9630	N/A

2000 MY Emission Control Labels

Year	Model	CA Emission Model No.	50 States Emission Model No.	Federal Emission Model No.
2000	ES 300	N/A	9000	N/A
	SC 300		9200	
	SC 400		9220	
	GS 300		9300	
	GS 400		9320	
	LS 400		9100	
	RX 300		9420, 9424	
	LX 470		9620	

Title **EMISSION CONTROL LABEL ORDER FORM CA/50 STATE CERTIFIED**

Should a California/50 State Certified Vehicle Emission Control Label be required, please abide by the regulations outlined in this TSIB.

NOTE: California/50 State Certified Vehicle Emission Control Labels cannot be ordered using normal parts ordering procedures.

REGULATIONS

California Revenue and Taxation Code Section 6263 states that only vehicle manufacturers or persons authorized by a manufacturer may affix an Emission Control Information Label (see sample) to a vehicle. Any person who violates this regulation may be subject to a fine and/or imprisonment.

Personnel at franchised dealers are authorized to affix such labels to vehicles and are therefore subject to this regulation and attendant penalties.

1. **DO NOT SELL LABELS OVER THE COUNTER, ALWAYS INSTALL THE LABEL ON THE VEHICLE.**

2. **NEVER INSTALL A LABEL ON A VEHICLE THAT IS NOT A CALIFORNIA/50 STATE EMISSION CERTIFIED VEHICLE.**

To ensure the correct application of these labels, it is necessary to use the following special ordering procedures to obtain a replacement label.

- Make a copy of the form provided on page 2 of this bulletin.
- Fill in the required information and mail or fax the form to the address or number indicated.
- For questions regarding Vehicle Emission Control Information Labels for California/50 State Certified, call (310) 781–3254.

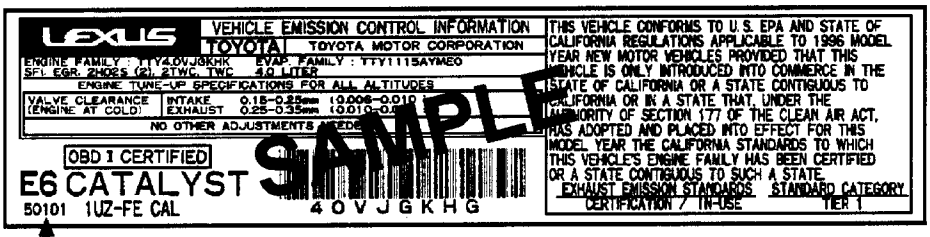

Label No.

IMPORTANT — PLEASE READ FIRST
Make a copy of this form, carefully complete all information and fax or mail the form to the address or fax number indicated below

TMS USE ONLY

VIN:

TMS USE ONLY

MILEAGE:

P/D: /

LABEL NUMBER (See sample on page 1):

PART NUMBER: -

TMS USE ONLY: -

REASON FOR REPLACEMENT:

_____

_____

_____

DEALER INFORMATION

DEALER NUMBER:

DEALER NAME: _____ CONTACT PERSON: _____

ADDRESS: _____

CITY: _____ STATE: _____ PHONE NUMBER: _____

MAIL OR FAX THIS FORM TO:

TOYOTA MOTOR SALES, U.S.A. INC.
19001 S. Western Ave.
P.O. BOX 2991
Torrance, CA 90509-2991
Attn.: Technical Planning and Coordination, S202
Fax Number: (310) 781-3399

1996 CALIFORNIA EMISSION CONTROL LABELS

MODEL	ENGINE	PART NUMBER
ES 300	1MZ-FE	11298-20090
GS 300	2JZ-FE	11298-46084
SC 300	2JZ-FE	11298-46024
SC 400	1UZ-FE	11298-50064
LS 400	1UZ-FE	11298-50101
LX 450	1FZ-FE	11298-66060

LEXUS

Technical Service Information Bulletin

July 18, 1997

TSIB

Title:

REPLACEMENT CERTIFICATION LABELS

Models:

All Models

Introduction

Replacement Certification Labels (vinyl label affixed to driver's door or door post) **may be** available from Lexus providing the request meets one of the criteria listed below.

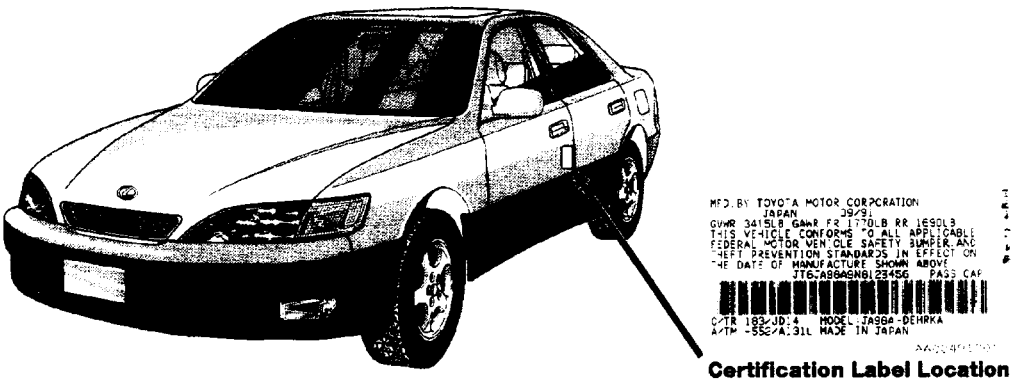

Certification Label Location

Affected Vehicles

- All Lexus vehicles.

Certification Label Criteria

1. The vehicle is in an accident and the label is damaged or is attached to a part that will be replaced during the repair.

NOTE:
- **Processing a new label will be delayed if the old certification label is not available.**
- **A new label MAY NOT be available if the vehicle is more than five years old and the old label does not accompany this request.**

2. The label is stolen.

Procurement Procedure

To request a replacement label, complete a copy of the form on the back of this bulletin. Your dealer parts account will be billed $10.00 for each replacement of a damaged or stolen label.

NOTE:
All replacement labels for damaged and/or stolen vehicles are subject to approval by the Technical Compliance Department. If you have any specific questions, contact (310)781-3390.

Warranty Information

- No applicable Warranty Information

APPLICATION FOR REPLACEMENT CERTIFICATION LABEL

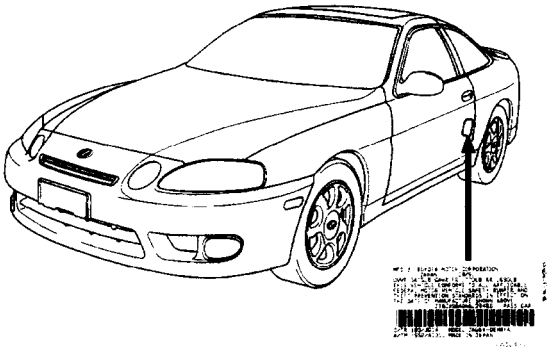

REASON FOR REPLACEMENT:

☐ ACCIDENT DAMAGE

☐ STOLEN

☐ OTHER _____
REASON/EXPLANATION

PLEASE PROVIDE CORRECT VIN

☐☐☐☐☐☐☐☐☐☐☐☐☐☐☐☐☐

ATTACH ORIGINAL LABEL HERE

NOTE:
Original label **MUST** accompany this application or order will be delayed.

DEALER INFORMATION

DEALER CODE: ☐☐☐☐☐

DEALER NAME: _____

ADDRESS: _____
STREET ADDRESS

_____
CITY, STATE, ZIP CODE

TELEPHONE: (_____) _____
AREA CODE, TELEPHONE NUMBER

CONTACT: _____
FIRST NAME, LAST NAME

MAIL *(DO NOT FAX)* THE COMPLETED REQUEST FORM WITH THE OLD LABEL TO:

TOYOTA MOTOR SALES, U.S.A. INC.
TECHNICAL COMPLIANCE DEPARTMENT, S203
19001 S. WESTERN AVENUE
TORRANCE, CA. 90509-2991

Title:
REPLACEMENT VIN PLATES

Models:
All Models

Introduction

Replacement **VIN** plates (metal plate riveted to dashboard) **may be** available from Lexus providing the request meets one of the criteria listed below.

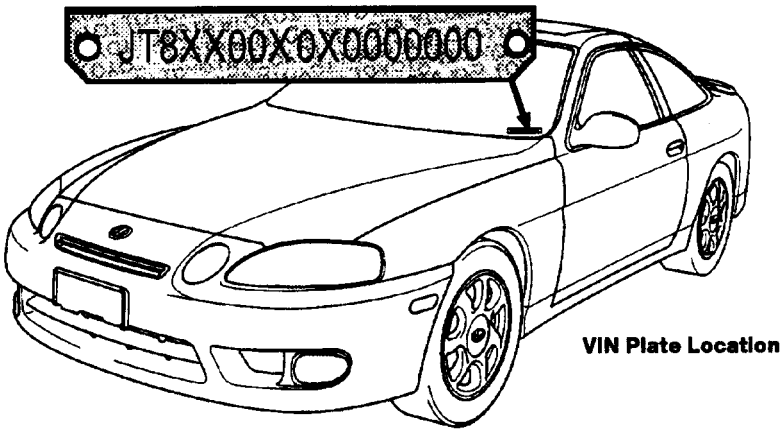

Affected Vehicles

- All Lexus vehicles.

Replacement VIN Plate Criteria

- The vehicle is in an accident and the plate is damaged.

NOTE:
The plate to be replaced MUST accompany the request.

NOTE:
If a plate is stolen, be sure to contact the State Police or the Department of Motor Vehicles. In most cases the state will issue a unique number so that the original number can be included on stolen vehicle listings. If this is the case, a replacement VIN plate is NOT available from Lexus. However, the original VIN, NOT the state-issued VIN, must be used on all warranty claims.

Procurement Procedure

To request a replacement plate, complete a **copy** of the form on the back of this page. Note that damaged VIN plates must accompany the request form. Your dealer parts account will be billed $10.00 for each replacement of a damaged plate.

NOTE:
All replacement plates for damaged and/or stolen vehicles are subject to approval by the Technical Compliance Department. If you have any specific questions, contact (310)781-3390.

Warranty Information

- No applicable Warranty Information.

APPLICATION FOR REPLACEMENT VIN PLATE

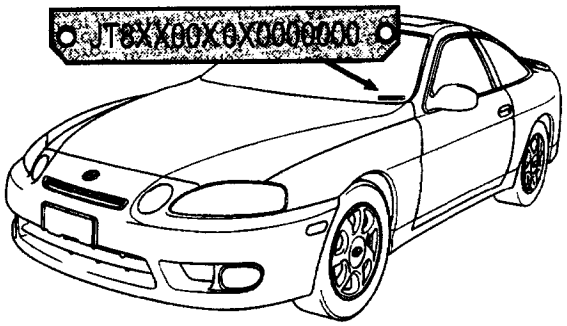

REASON FOR REPLACEMENT:

☐ ACCIDENT DAMAGE

☐ OTHER _____

REASON OR EXPLANATION

PLEASE PROVIDE CORRECT VIN ☐☐☐☐☐☐☐☐☐☐☐☐☐☐☐☐☐

ATTACH DAMAGED PLATE HERE

DEALER INFORMATION

DEALER CODE: ☐☐☐☐☐

DEALER NAME: _____

ADDRESS: _____
STREET ADDRESS

_____
CITY, STATE, ZIP CODE

TELEPHONE: ( ) _____
AREA CODE, TELEPHONE NUMBER

CONTACT: _____
FIRST NAME, LAST NAME

MAIL *(DO NOT FAX)* THE COMPLETED REQUEST FORM WITH THE OLD PLATE TO:

TOYOTA MOTOR SALES, U.S.A. INC.
TECHNICAL COMPLIANCE DEPARTMENT, S203
19001 S. WESTERN AVENUE
TORRANCE, CA. 90509-2991

Title:
WARRANTY PARTS MARKING PROCEDURE
Models:
All Models

Introduction

Effective September 1, 2003, all warranty parts (as indicated on the next page) must be marked in the area or location of the failure. The technician should complete this procedure after the failed part has been removed from the vehicle and before the part is placed in the 10–bin storage. (Exchanged parts and remanufactured parts are not included in this procedure.)

Failed parts marking will be beneficial in detecting and resolving product and parts quality issues. This will also offer additional opportunities to make future enhancements to our parts and products.

Parts are subject to random inspection in the dealership by field representatives to ensure compliance with this new policy.

Failure to comply with this policy may result in a debit of the corresponding warranty claim(s).

Applicable Vehicles

- All models.

Parts Marking Procedure

All technicians must follow these procedures to ensure proper parts marking:

- Wipe the part clean (no excess fluid should be present).
- Indicate area of defect or failure by marking the specific part(s) with a water resistant permanent marker. Use a color that can be easily seen against the background of the part being marked. For dark surfaces the color yellow is highly recommended as well as the color black for light surfaces.
- Mark the area of failure or defect by drawing a circle, a square, pointing an arrow or adhering tape with an indication of the failed or defect location.
- Attach a completed Warranty Parts Tag (M/N 00404–PRETN–TAGS) to the marked part.

All other parts recovery/shipping policies and procedures apply.

Warranty Information

OP CODE	DESCRIPTION	TIME	OFP	T1	T2
N/A	Not Applicable to Warranty	–	–	–	–

Parts Marking Requirement

Dealers are requested to mark the location of the failure of all warranty parts that are listed below. ***This list is not inclusive.*** There may be other components that can be marked in the area of failure. All other parts that can be marked should be marked.

Parts Marking List

assist grip assy
audio (blemish)
back door garnish
bumper covers
cargo cover (retractable)
carpet
clutch disc
clutch flywheel
combination meter glass
console and components
cowl assy
cowl side trim sub–assy
cupholders
cylinder head cover sub–assy
dash panel insulator assy
dashboard and trim
disc wheel
display panels
door handle assy
door moulding
door trim panel & molding
emblems
engine oil pan
exhaust manifold
floor and cargo mats
gear shift knob
grills
headlamps
headliner
hoses
instrument panel safety pad sub–assy
Interior light assemblies and covers
knobs, levers, handles
l/pulley pump assy
mirrors (side and rearview)
navigation or VES screens
pillar garnish
rack and pinion/power steering gear assy
radiator
room partition board
rotors (mark where min. runout is exceeded or warped)
seat covers/cushions
seat tracks
soft trim
spare tire cover
steering column cover
steering wheel
tail lamps and covers
transmission oil pan
visor
washer jar
wheel cap
wheels

Parts Marking List (Continued)

NOTE:
The following parts do not have to be marked unless the technician can determine failure and location.

air induction/ejection systems
all computers
alternators
audio (internal)
batteries
bearings
belts
catalytic converter
crankshaft
cruise control
distributors
EGR systems
engine control systems
exchange parts
exhaust systems
fuel injection systems
fuel injectors
fuel pump
ignition system
internal engine components
internal transmission components
oil cooler
power door lock switches
remanufactured parts
starters
suspension components
valve covers
window regulators
wiper motors

LEXUS

Technical Service Information Bulletin

October 11, 2002

TSIB

Title:

SUSPENSION BALL JOINT INSPECTION

Models:

Applicable Models

Introduction

This Service Bulletin is to inform you of the inspection method, and free play specification figures for suspension ball joints. The on–vehicle inspection methods have been standardized.

Applicable Vehicles

- **1990 – 2000** model year **LS 400** vehicles.
- **2001 – 2003** model year **LS 430** vehicles.
- **1993 – 2003** model year **GS 300** vehicles.
- **1998 – 2000** model year **GS 400** vehicles.
- **2001 – 2003** model year **GS 430** vehicles.
- **1992 – 2000** model year **SC 300 & SC 400** vehicles.
- **2002 – 2003** model year **SC 430** vehicles.
- **2001 – 2003** model year **IS 300** vehicles.
- **1999 – 2003** model year **RX 300** vehicles.
- **1990 – 2003** model year **ES 250 & ES 300** vehicles.
- **1998 – 2003** model year **LX 470** vehicles.

Warranty Information

OP CODE	DESCRIPTION	TIME	OFP	T1	T2
N/A	Not Applicable to Warranty	–	–	–	–

Inspection Information Table

MODEL	LOCATION	LOWER BALL JOINT OR SUSPENSION BALL JOINT			UPPER BALL JOINT		
		INSP. METHOD	MAX. PLAY	TURNING TORQUE	INSP. METHOD	MAX. PLAY	TURNING TORQUE
LS 400 (UCF10) 1990–1994	Front	1–(A)	0.016 in. (0.4) mm	4 in.•lbf (0.5 N•m) or Less	2	No Play Felt	31 in.•lbf (3.5 N•m) or Less
	Rear	3	No Play Felt	31 in.•lbf (3.5 N•m) or Less			
LS 400 (UCF20) 1995–2000	Front	1–(A)	0.016 in. (0.4) mm	22 in.•lbf (2.5 N•m) or Less			
	Rear	3	No Play Felt	31 in.•lbf (3.5 N•m) or Less			
LS 430 (UCF30) 2001–2003	Front	1–(A)	No Play Felt	31 in.•lbf (3.5 N•m) or Less			
	Rear	3	No Play Felt	31 in.•lbf (3.5 N•m) or Less			
GS 300 (JZS147) 1993–1997	Front	1–(A)	0.016 in. (0.4) mm	27 in.•lbf (3.0 N•m) or Less			
	Rear	1–(A)	No Play Felt	31 in.•lbf (3.5 N•m) or Less			
GS 300, 400, 430 (JZS16#, UZS16#) 1998–2003	Front	1–(A)	0.016 in. (0.4) mm	27 in.•lbf (3.0 N•m) or Less			
	Rear	3	No Play Felt	31 in.•lbf (3.5 N•m) or Less			
SC 300, 400 (JZZ31, UZZ30) 1992–2000	Front	1–(A)	0.016 in. (0.4) mm	27 in.•lbf (3.0 N•m) or Less			
	Rear	1–(A)	No Play Felt	31 in.•lbf (3.5 N•m) or Less			
SC 430 (UZZ40) 2002–2003	Front	1–(A)	0.016 in. (0.4) mm	27 in.•lbf (3.0 N•m) or Less			
	Rear	3	No Play Felt	31 in.•lbf (3.5 N•m) or Less			

Inspection Information Table (Continued)

MODEL	LOCATION	LOWER BALL JOINT OR SUSPENSION BALL JOINT			UPPER BALL JOINT		
		INSP. METHOD	MAX. PLAY	TURNING TORQUE	INSP. METHOD	MAX. PLAY	TURNING TORQUE
IS 300 (JCE10) 2001–2003	Front	1–(A)	0.016 in. (0.4) mm	27 in.•lbf (3.0 N•m) or Less	2	No Play Felt	31 in.•lbf (3.5 N•m) or Less
	Rear	3	No Play Felt	31 in.•lbf (3.5 N•m) or Less			27 in.•lbf (3.0 N•m) or Less
RX 300 (MCU10, 15) 1999–2003	Front	1–(B)	No Play Felt	31 in.•lbf (3.5 N•m) or Less	N/A	N/A	N/A
	Rear	N/A	N/A	N/A	N/A	N/A	N/A
ES 250 & 300 (VZV21, MCV20, 30) 1990–2003	Front	1–(B)	No Play Felt	31 in.•lbf (3.5 N•m) or Less	N/A	N/A	N/A
	Rear	N/A	N/A	N/A	N/A	N/A	N/A
LX 470 (UZJ100) 1998–2003	Front	1–(A)	No Play Felt	27 in.•lbf (3.0 N•m) or Less	2	No Play Felt	40 in.•lbf (4.5 N•m) or Less
	Rear	N/A	N/A	N/A	N/A	N/A	N/A

Free Play Inspection

NOTE:
- **Be sure to check the table for the applicable inspection type based on the vehicle model.**
- **Refer to the table for the standard free play values.**

1. Inspect Lower Ball Joint Free Play

A. Move the hub up and down by hand (Most models with wish–bone suspension):

a. Remove the tire.

b. Install the 2 lug nuts.

c. Inspect the free play while moving the lug nuts up and down at a force of 67 lbf (294 N, 30 kgf).

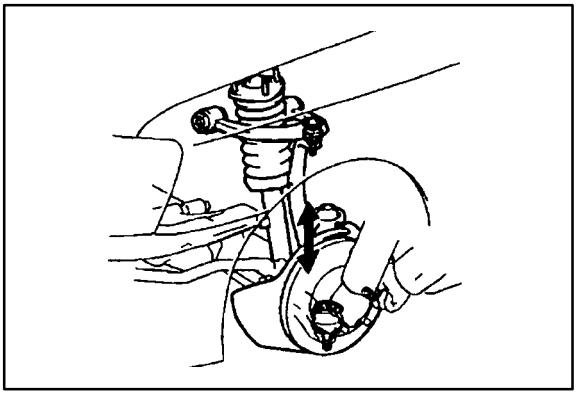

Free Play Inspection (Continued)

B. Move the lower arm by hand (All models with strut type suspension and some models with wish–bone type suspension):

a. Lift up the vehicle.

b. Inspect the free play while moving the lower arm up and down at a force of 67 lbf (294 N, 30 kgf).

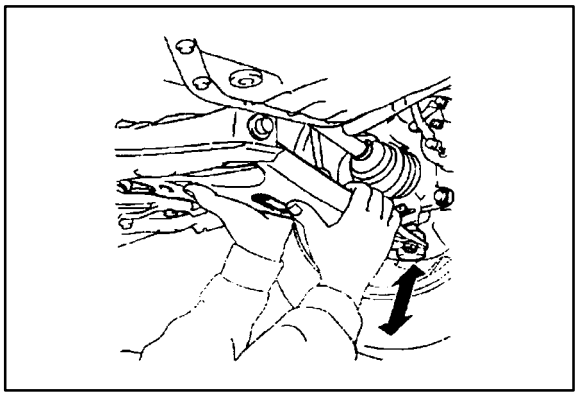

2. Inspect Upper Ball Joint Play

Move the upper arm by hand (Models where the **LOWER** control arm are linked by a torsion bar, and all models using a coil spring.

A. Remove the front tire.

B. Inspect the free play while moving the upper arm up and down at a force of 67 lbf (294 N, 30 kgf).

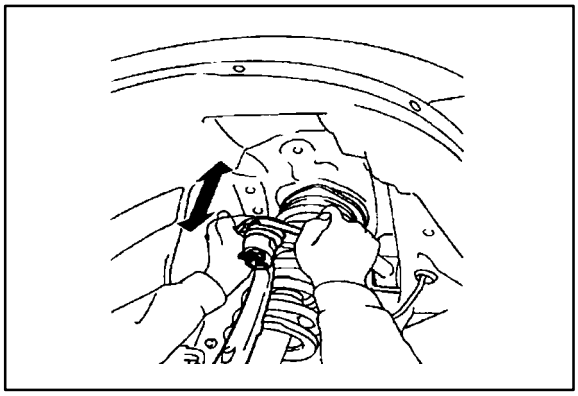

3. Inspect the Suspension Arm Ball Joint Free Play

A. Lift up the vehicle.

B. Inspect the free play while moving the control arm by hand.

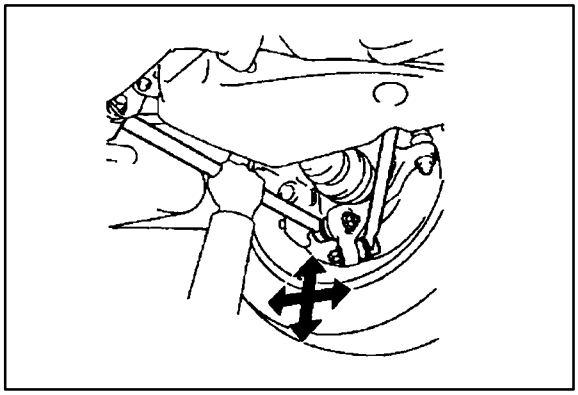

(Reference)

Free Play Inspection Method (Gauge Installation)

- Position the dial gauge between the arm (upper or lower) and the knuckle, and measure free play.
  (This illustration shows how to measure free play for vehicles with double wishbone type suspension with coil spring).

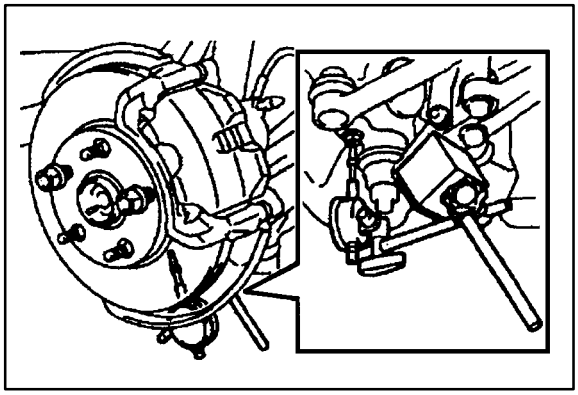

Inspect Ball Joint Dust Cover

Check for cracks and grease leaks on the dust cover (boots).

Turning Torque Inspection

Inspect Ball Joint Turning Torque

Move the stud back and forth 5 times, then turn the stud continuously at 3–5 seconds per turn, and measure the turning torque at the 5th turn.

HINT:

Refer to the table for standard values for the turning torque.

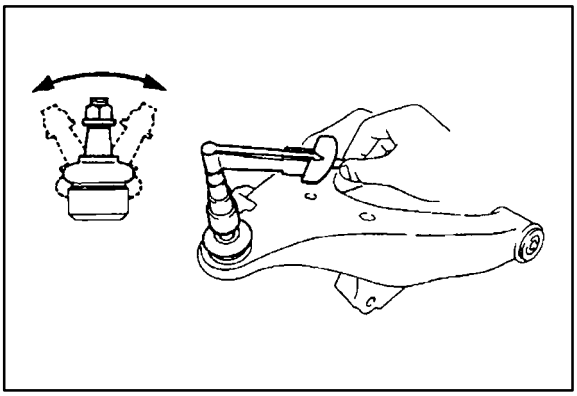

LEXUS

Technical Service Information Bulletin

May 4, 2001

TSIB

Title:

REPLACEMENT CERTIFICATION LABELS

Models:

All Models

Introduction

Replacement Certification Labels (vinyl label affixed to driver's door or door post) **may be** available from Toyota providing the request meets one of the criteria listed below.

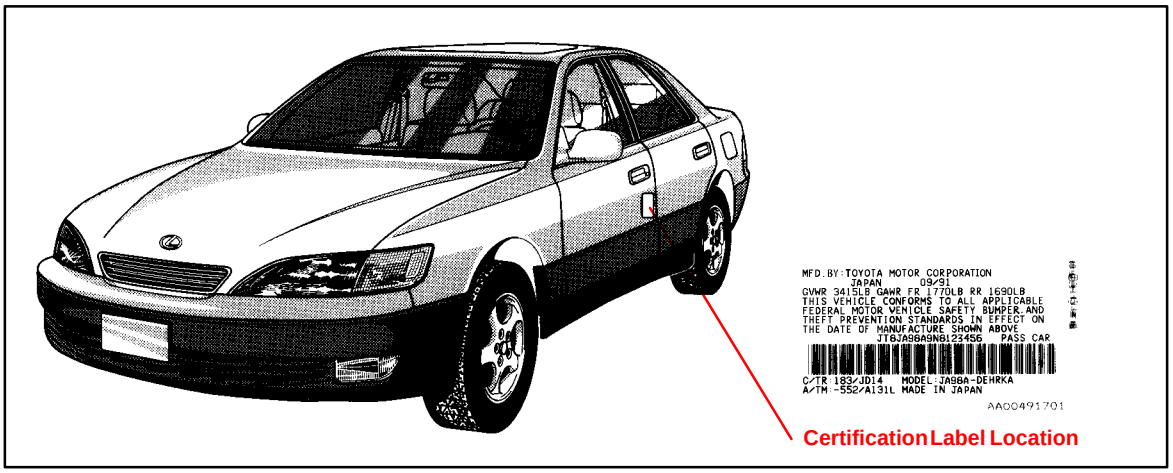

Applicable Vehicles

- All Lexus vehicles.

Certification Label Criteria

1. The vehicle is in an accident and the label is damaged or is attached to a part that will be replaced during the repair.

> **NOTE:**
> - **Processing a new label *will be delayed significantly if the old certification label is not available.***
> - **A replacement label MAY NOT be available if the vehicle is more than 5 years old and the old label does not accompany this request.**

2. The label is stolen.

Procurement Procedure

To request a replacement label, complete a copy of the form on the back of this bulletin. Your dealer parts account will be billed $10.00 for each replacement of a damaged or stolen label.

> **NOTE:**
> **All replacement labels for damaged and/or stolen vehicles are subject to approval by the Technical Compliance Department. If you have any specific questions, contact (310) 468–3390.**

Warranty Information

OP CODE	DESCRIPTION	TIME	OPN	T1	T2
N/A	Not Applicable to Warranty	–	–	–	–

APPLICATION FOR REPLACEMENT CERTIFICATION LABEL

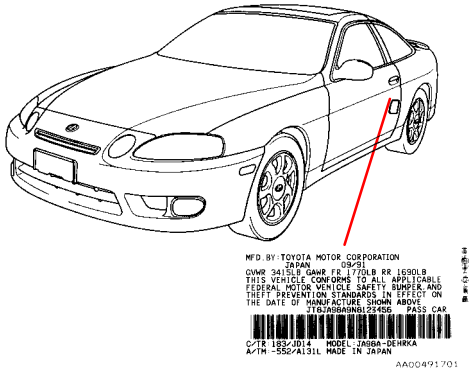

REASON FOR REPLACEMENT

☐ ACCIDENT DAMAGE

☐ STOLEN

☐ OTHER _____

REASON/EXPLANATION

PLEASE PROVIDE CORRECT VIN _ _ _ _ _ _ _ _ _ _ _ _ _ _ _ _ _

ATTACH ORIGINAL LABEL HERE

NOTE:
Original label MUST accompany this application or order will be significantly delayed.

DEALER INFORMATION

DEALER CODE: ☐☐☐☐☐

DEALER NAME: _____

ADDRESS: _____
STREET ADDRESS

_____
CITY, STATE, ZIP CODE

TELEPHONE: ( ) _____
AREA CODE, TELEPHONE NUMBER

CONTACT: _____
FIRST NAME, LAST NAME

MAIL (*DO NOT FAX*) THE COMPLETED REQUEST FORM WITH THE OLD LABEL TO:

TOYOTA MOTOR SALES, U.S.A. INC.
TECHNICAL COMPLIANCE DEPARTMENT, S207
19001 S. WESTERN AVENUE
TORRANCE, CA 90509–2991

LEXUS

Technical Service Information Bulletin

May 4, 2001

TSIB

Title:
REPLACEMENT VIN PLATES

Models:
All Models

Introduction

Replacement **VIN** plates (metal plates riveted to dashboard) **may be** available from Lexus providing the request meets the criteria listed below.

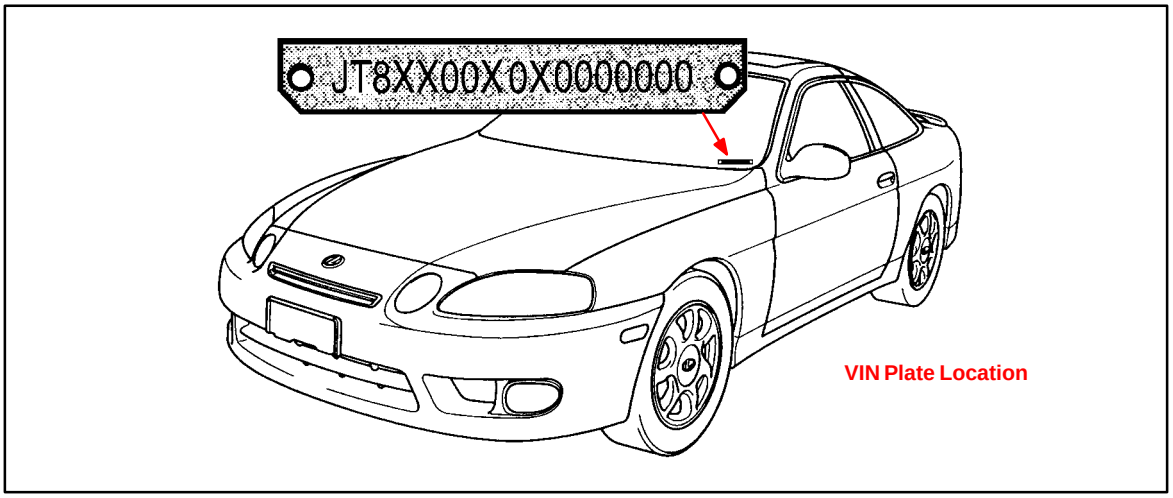

Applicable Vehicles

- All Lexus vehicles.

Replacement VIN Plate Criteria

- The vehicle is in an accident and the plate is damaged.

NOTE:
The original plate to be replaced MUST accompany the request.

NOTE:
If a plate is stolen, be sure to contact the State Police or your State's Department of Motor Vehicles (DMV). In most cases the State DMV will issue a unique number so that the original number can be included on stolen vehicle listings. If this is the case, a replacement plate is NOT available from Lexus. However, the original VIN, NOT the state issued VIN, must be used on all warranty claims.

Procurement Procedure

To request a replacement plate, complete a copy of the form on the back of this page. Note that the damaged VIN plate **MUST** accompany the request form. Your dealer parts account will be billed $10.00 for each replacement of a damaged plate.

NOTE:
All replacement plates for damaged and/or stolen vehicles are subject to approval by the Technical Compliance Department. If you have any specific questions, contact (310) 468–3390.

Warranty Information

OP CODE	DESCRIPTION	TIME	OPN	T1	T2
N/A	Not Applicable to Warranty	–	–	–	–

APPLICATION FOR REPLACEMENT VIN PLATE

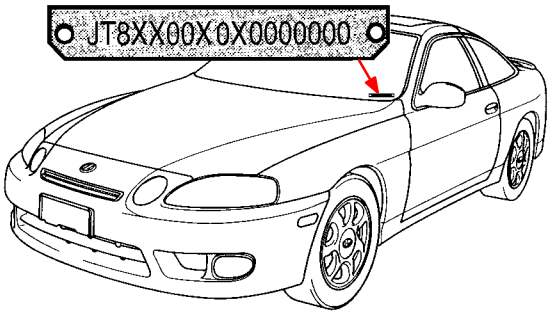

REASON FOR REPLACEMENT

☐ ACCIDENT DAMAGE

☐ OTHER _____

REASON/EXPLANATION

PLEASE PROVIDE CORRECT VIN _ _ _ _ _ _ _ _ _ _ _ _ _ _ _ _ _

ATTACH DAMAGED PLATE HERE

DEALER INFORMATION

DEALER CODE: ☐☐☐☐☐

DEALER NAME: _____

ADDRESS: _____
STREET ADDRESS

_____
CITY, STATE, ZIP CODE

TELEPHONE: ( ) _____
AREA CODE, TELEPHONE NUMBER

CONTACT: _____
FIRST NAME, LAST NAME

MAIL (*DO NOT FAX*) THE COMPLETED REQUEST FORM WITH THE OLD PLATE TO:

TOYOTA MOTOR SALES, U.S.A. INC.
TECHNICAL COMPLIANCE DEPARTMENT, S207
19001 S. WESTERN AVENUE
TORRANCE, CA. 90509–2991

Title:

YEAR 200 READINESS DISCLOSURE

Models:

All Models

Introduction

Based upon information we have obtained from our suppliers,[1] all factory–installed systems in Lexus cars and sports utility vehicles distributed and/or sold by Lexus (”Vehicles”) will not be affected by the change of date from 1999 to the year 2000.

Lexus anticipates no problems with past, current or future Lexus brand vehicles or Genuine Lexus parts and accessories regarding year 2000 readiness. We hope the following information is helpful to you.

Please contact our Customer Service Department at 1–800–255–3987 should you have any other questions.

Applicable Vehicles

- **All Models**

Warranty

WARRANTY STATEMENT WITH RESPECT TO LEXUS BRAND VEHICLES

Lexus is pleased to confirm that the manufacturer’s limited express warranty and Lexus’ powertrain warranty warrant that all factory–installed systems in new Vehicles and Lexus Certified Pre–Owned Vehicles shall be free of any defect arising solely due to a change in date from the year 1999 to the year 2000.[2]

With respect to Vehicles no longer covered under such Lexus limited express warranty, Lexus is not aware of any operational safety or functional impact the year 2000 date change would have upon any factory–installed system in Lexus Vehicles. Should Lexus become aware of any material impact to the operational safety or functionality of such systems, Lexus shall publish such information promptly.

WARRANTY STATEMENT WITH RESPECT TO GENUINE LEXUS PARTS AND ACCESSORIES

Lexus is pleased to confirm that the manufacturer’s limited express warranty warrants that all new Lexus Genuine Parts and Accessories shall be free of any defect arising solely due to a change in date from the year 1999 to the year 2000.[2]

With respect to products no longer covered under a Lexus limited express warranty, Lexus is not aware of any operational safety or functional impact the year 2000 date change would have upon such products. Should Lexus become aware of any material impact to the operational safety or functionality of such a product, Lexus shall publish such information promptly.

[1] Lexus relies on the statements made by its suppliers and has not independently verified such information.

[2] Please refer to terms of limited express warranty for disclaimers, limitations and restrictions.

Parts & Accessories

GENUINE LEXUS PARTS AND ACCESSORIES

Based upon information we have obtained from our suppliers,[1] all new Genuine Lexus Parts and Accessories will not be affected by the change of date from 1999 to the year 2000.

DEALER–INSTALLED AND OTHER THIRD PARTY–INSTALLED SYSTEMS/PRODUCTS

Our dealers and distributors may sell and/or install products that are not Genuine Lexus Parts and Accessories. Lexus can only determine the Year 2000 status of Genuine Lexus Parts and Accessories. Therefore, the above statements do not apply to products that are not Genuine Lexus Parts and Accessories or were not installed by the factory. We encourage you to contact your dealer or other relevant third party regarding products installed on your Lexus vehicle(s) that are not Genuine Lexus Parts and Accessories and/or were not installed by the factory to determine any Year 2000 issues associated with those products.

[1] Lexus relies on the statements made by its suppliers and has not independently verified such information.

Title:

BRAKE BOOSTER PUSH ROD GAUGE (SST)

Models:

All Models

Introduction

When inspecting or making brake booster push rod adjustments with SST 09737–00010, it is necessary to assure proper tool configuration prior to use. The SST has a reversible center plunger that allows it to function on a wide range of Lexus vehicles. Prior to using, verify that it is configured correctly for the application by checking the master cylinder outer diameter at the point illustrated below. The dimensions for the SST, Part Number 09737–00010, are also shown in the illustrations below.

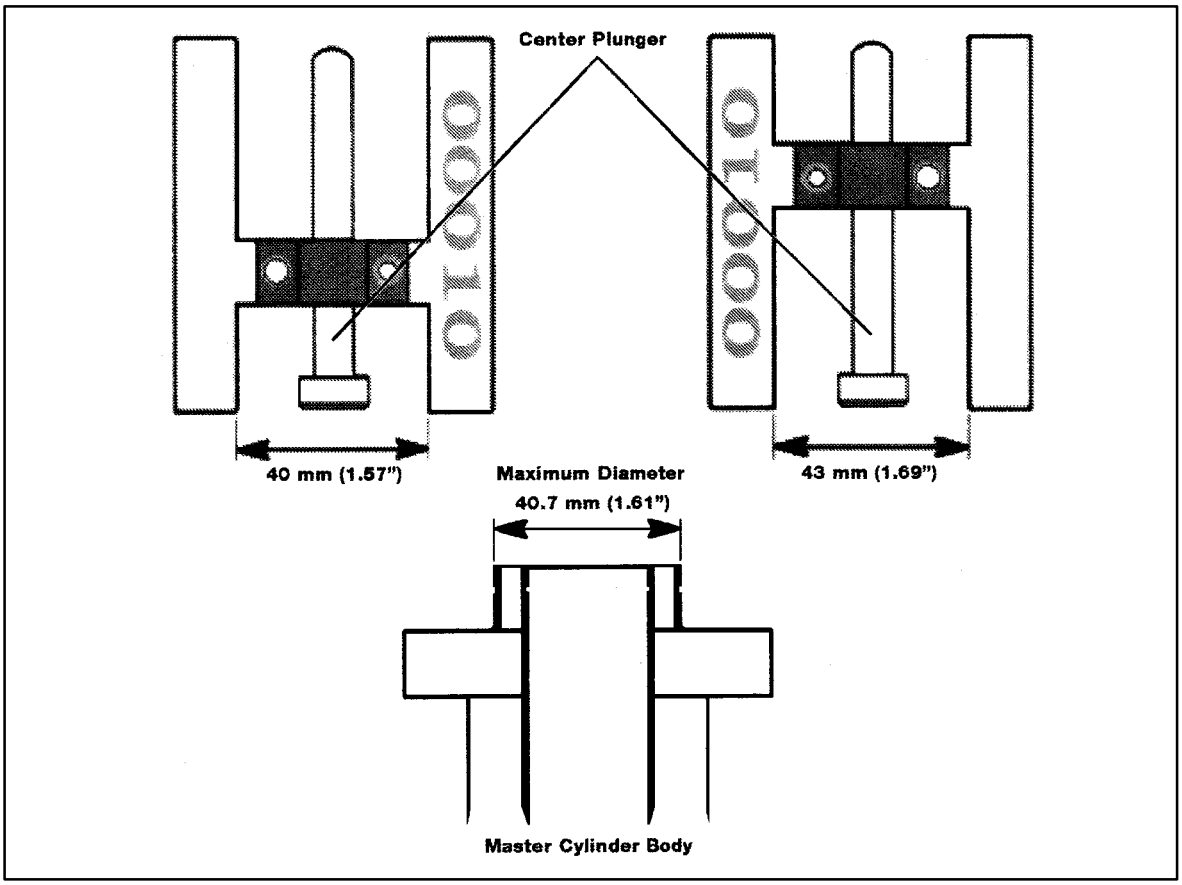

Parts Information

PART NUMBER	PART NAME
09737–00010	Brake Booster Push Rod Gauge (SST)

Warranty Information

OPCODE	DESCRIPTION	TIME	OPN	T1	T2
N/A	Not applicable to warranty	–	–	–	–

LEXUS

Technical Service Information Bulletin

September 8, 2003

Title:

DIAGNOSTIC TESTER CONTROLLER AREA NETWORK (CAN) INTERFACE MODULE

Models:

All Models

TSIB

Introduction

Over the next three model years, all Lexus vehicles will begin using an all–new diagnostic communication protocol, Controller Area Network (CAN). CAN will be introduced on the 2004 LS 430 this fall. A CAN Interface Module has been distributed to all dealers as an essential Special Service Tool (SST) and will allow the Diagnostic Tester to communicate with CAN–equipped vehicles. Please use the following instructions to install the new CAN Interface Module as soon as it arrives at your dealership.

NOTE:

- **Version 10.2a or later Diagnostic Tester Software must be used to enable communication with CAN–equipped vehicles. Version 10.2a will be distributed to dealers via TIS before CAN–equipped vehicles arrive at dealers.**
- **There is no need to remove the CAN Interface Module when working with non–CAN systems or older software versions (Version 10.1a or earlier). The Diagnostic Tester will communicate with all DLC3/J1962 based systems with the CAN Interface Module installed.**

Applicable Vehicles

- **All Models**.

Required SSTs

SPECIAL SERVICE TOOLS (SSTs)	PART NUMBER	QUANTITY
Lexus Diagnostic Tester Kit*	01001270	1
CAN Interface Module Kit*	01002744	1
12 Megabyte Diagnostic Tester Program Card with version 10.2a Software (or later)*	01002593-005	1

* Essential SSTs.

NOTE:

Additional Diagnostic Tester Kits, CAN Interface Modules, Program Cards or SSTs may be ordered by calling SPX/OTC at 1-800-933-8335.

Warranty Information

OP CODE	DESCRIPTION	TIME	OFP	T1	T2
N/A	Not Applicable to Warranty	–	–	–	–

Installation Procedure

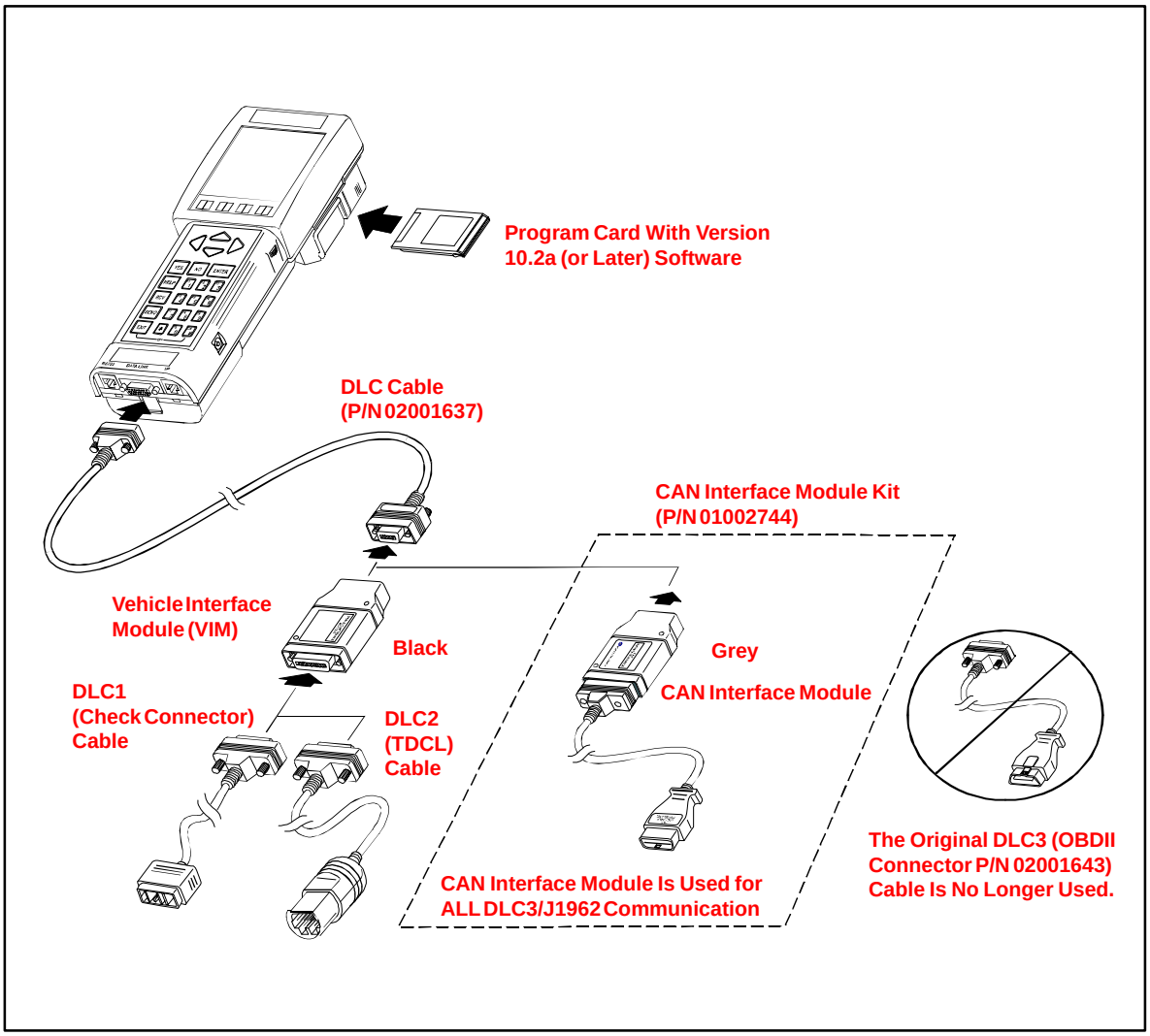

1. Remove the original DLC3 Cable and store it in the Diagnostic Tester storage case.
2. Connect the CAN Interface Module to the DLC Cable.
3. Use the Diagnostic Tester with the CAN Module installed for all DLC3/J1962 based vehicle communication.
4. If you experience problems with the Diagnostic Tester or CAN Interface Module, please contact Lexus Special Service Tool Customer Support at 1–800–933–8335.

NOTE:

- **There is no need to remove the CAN Interface Module when working with non–CAN systems or older software versions (Version 10.1a or earlier). The Diagnostic Tester will communicate with all DLC3/J1962 based systems with the CAN Interface Module installed.**
- **For DLC1 and DLC2 communication you must continue to use the Vehicle Interface Module (VIM).**

Title **ENGINE SUPPORT BAR IMPROVEMENTS**

A new engine support bar, P/N 00002–01724, has been released by OTC. This new tripod design engine support bar, which is designed to support engine weight while transmission service is being performed, supersedes the current bipod engine support bar, P/N 00002–01722.

For dealers who currently own the 00002–01722 engine support bar, OTC has developed an upgrade kit, P/N 00002–01724–U which includes all necessary components and hardware to convert it to the new tripod design. **To avoid the potential for personal injury or property damage, do not use the existing engine support bar without the new upgrade kit.**

00002–01724 TRIPOD ENGINE SUPPORT BAR KIT	00002–01724–U TRIPOD UPGRADE KIT
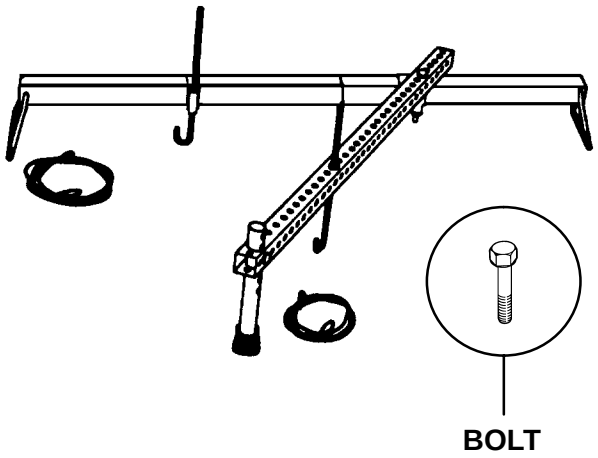	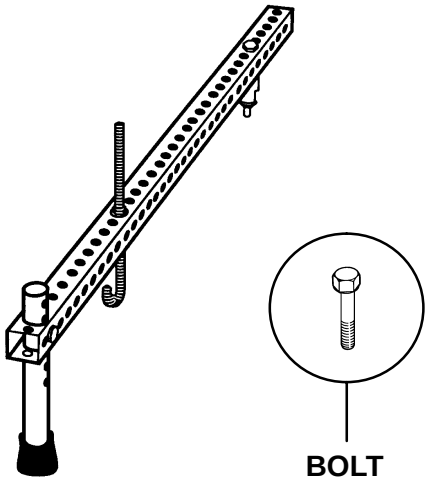

DEALER PRICING IS AS FOLLOWS:

AVAILABLE SST'S		
TOOL NUMBER	**TOOL NAME**	**PRICE**
00002–01724	Tripod Engine Support Bar Kit	$165.35
00002–01724–U	Tripod Upgrade Kit	$ 77.25

For more information and to order these Special Service Tools, please call OTC at 800–933–8335.

LEXUS

Technical Service Information Bulletin

June 7, 2002

Title:

MIDTRONICS BATTERY TESTER SOFTWARE UPDATE

Models:

All Models & Model Years Through Current

TSIB

Introduction

The internal software of the Midtronics Battery Tester can now be periodically updated to support future models. New updates will include new battery warranty codes and testing information.

The Technical Information System (TIS) will be the primary distribution method for battery tester software updates. Utilizing the new Midtronics Update Wizard (MUW) and the new essential SST (Midtronics Battery Tester Adapter), you will be able to quickly and easily update your Midtronics Battery Tester.

This bulletin will show you how to use and install the Midtronics Update Wizard to update the Midtronics tester software.

Applicable Vehicles

- **All models and model years through current.**

Required Tools & Material

SPECIAL SERVICE TOOLS (SSTs)	PART NUMBER	QUANTITY
Midtronics Battery Tester*	00002–MP815–L	1
Midtronics Battery Tester Adapter* 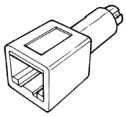	00002–DMPUC	1

* Essential SSTs.

Warranty Information

OP CODE	DESCRIPTION	TIME	OPN	T1	T2
N/A	Not Applicable to Warranty	–	–	–	–

Process Overview

The Midtronics Battery Tester Software Update is a 2-step process:

1. **Installing the Midtronics Update Wizard (MUW).**
   The Midtronics Update Wizard (MUW) is an application that only needs to be installed on the PC one time. This bulletin will provide the steps to install the MUW.

2. **Using the Midtronics Update Wizard (MUW).**
   The Midtronics Update Wizard (MUW) will be used with each battery tester software update. The Update Wizard will walk you through each step to connect the PC to the tester and perform the update.

Operation Procedure: Preparation

Before Installation or Use of the Midtronics Update Wizard (MUW):

Steps A and B are required to begin the update process. (Refer to Figure 1.)

A. Open TIS (Technical Information System) and go to the “Diagnostics” section.

B. Click on the text “Midtronics Battery Tester Software.”

FIGURE 1.

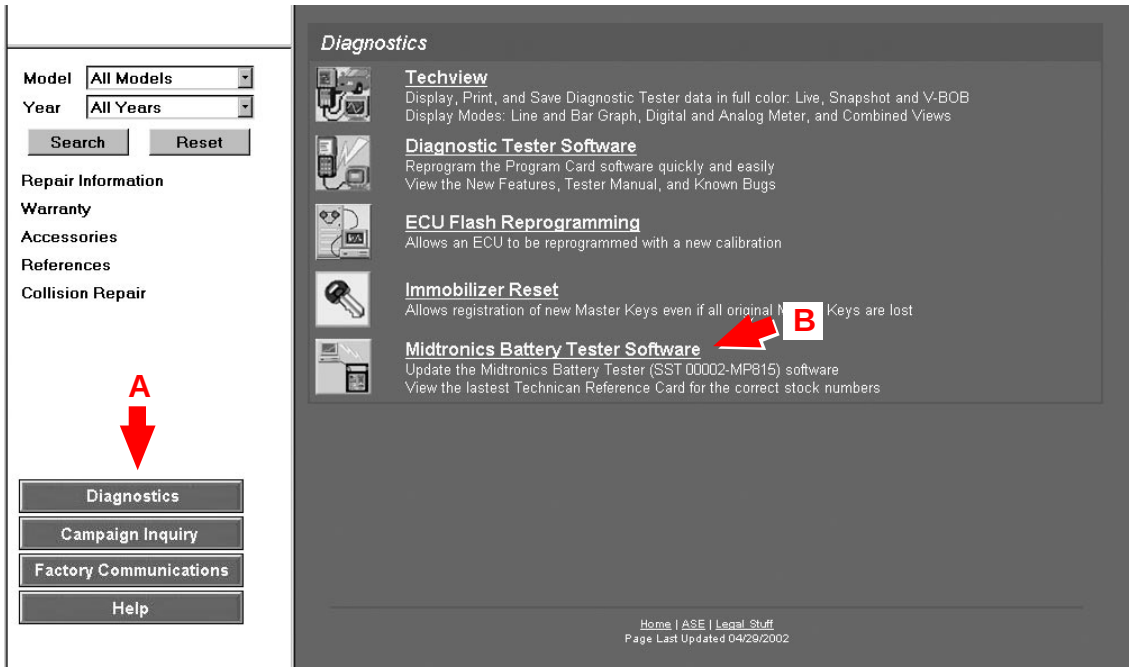

Operation Procedure

1. Installing the Midtronics Update Wizard (MUW).

NOTE:

The Midtronics Update Wizard only needs to be installed once and must be installed before the rest of the update process can take place. If this step is already complete, continue on to step 2.

A. Click on the text “Install MUW.” (Figure 2.)

B. The file download window will appear. Click on “Run this program from it’s current location.”

C. Click the “OK” button.

D. Allow the Update Wizard to perform its self–installation. This will take only a few minutes.

FIGURE 2.

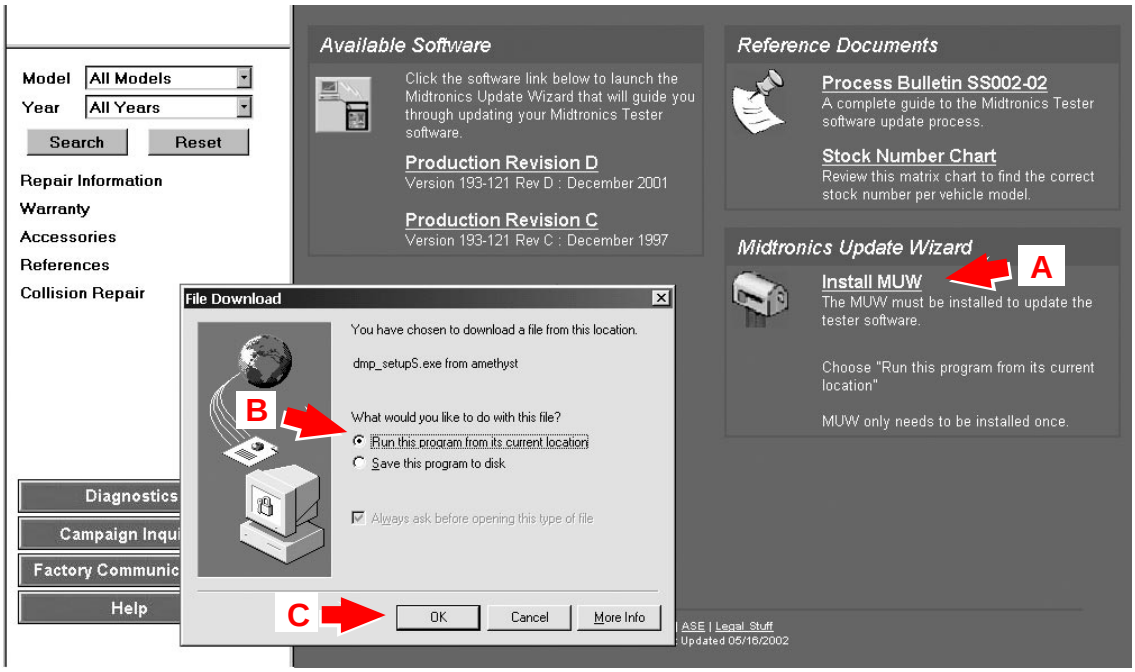

Operation Procedure (Continued)

2. Using the Midtronics Update Wizard (MUW).

A. Click on the latest version of production software. (Figure 3.) This will begin the software update process.

B. The next screen to appear will be the first screen of the software update. Click "Next" to continue.

FIGURE 3.

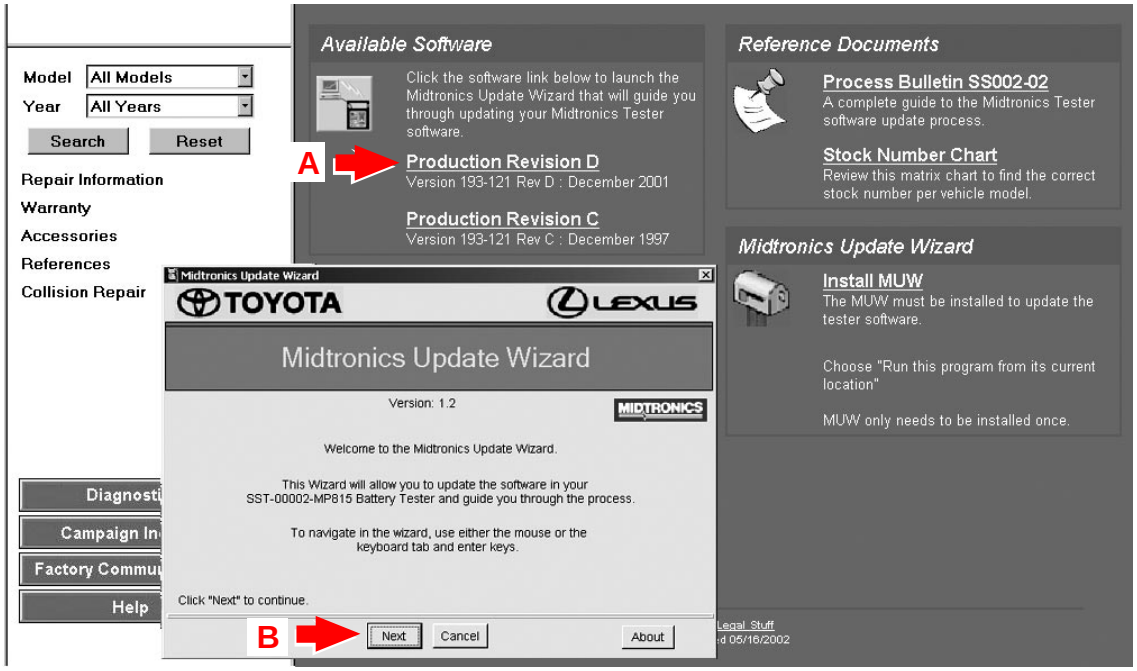

Operation Procedure (Continued)

C. Enter the serial number of the battery tester then click “OK.” (Figure 4.)

FIGURE 4.

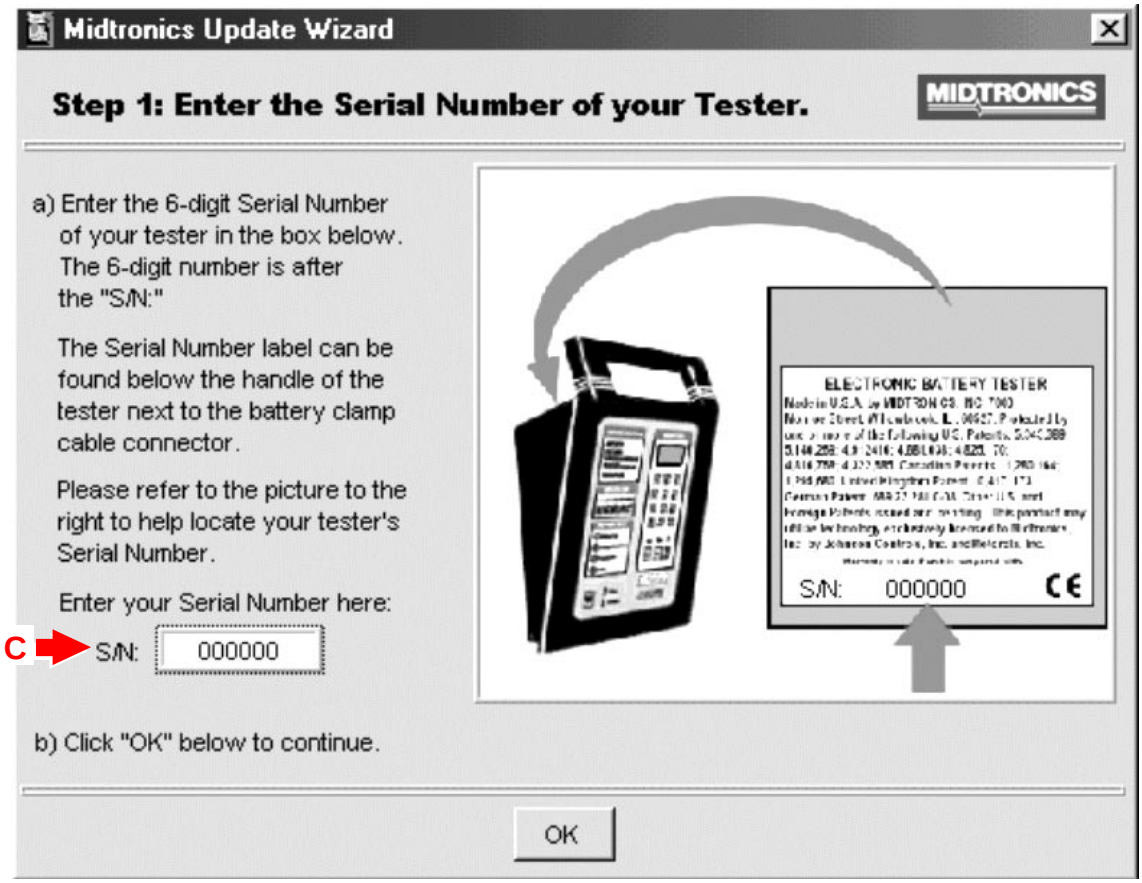

Operation Procedure (Continued)

D. Connect the Midtronics Battery Tester to TIS as instructed (Figure 5), then click "Next."

NOTE:

Connecting the Midtronics Battery Tester to the TIS station will require the use of SST 00002–DMPUC. This is an adapter that allows the TIS RS–232 cable to plug into the Battery Tester. (Figure 5.)

FIGURE 5.

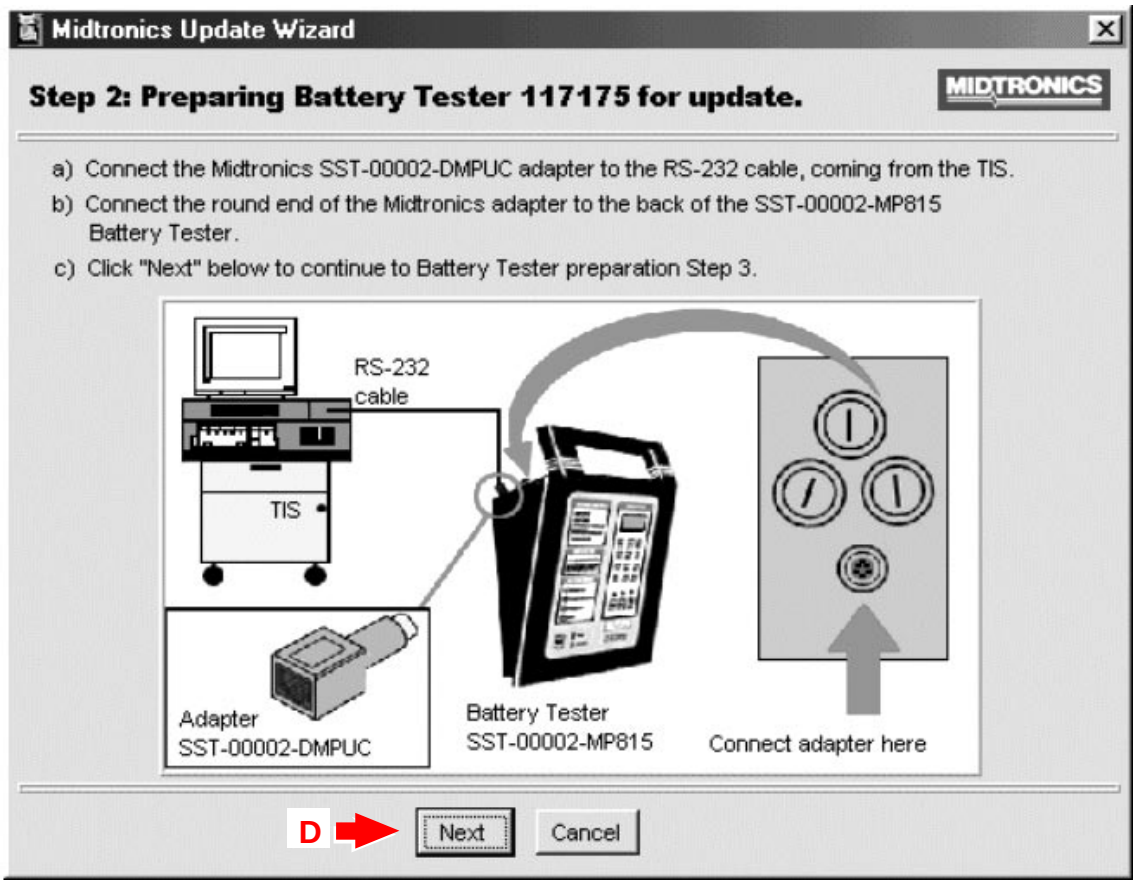

Operation Procedure (Continued)

E. Follow the instructions to put the Midtronics Battery Tester into the correct mode (Figure 6), then click “Next.”

FIGURE 6.

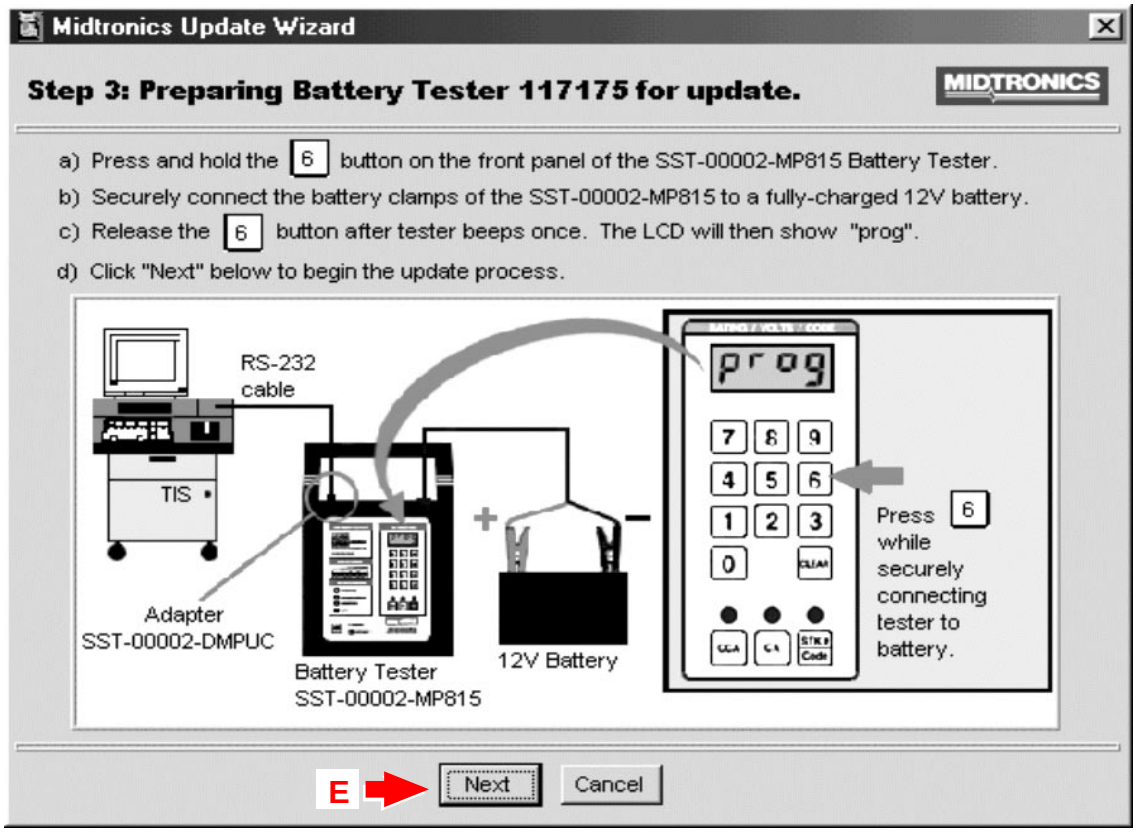

Operation Procedure (Continued)

F. Confirm the software version and click “Next.” (Figure 7.)

FIGURE 7.

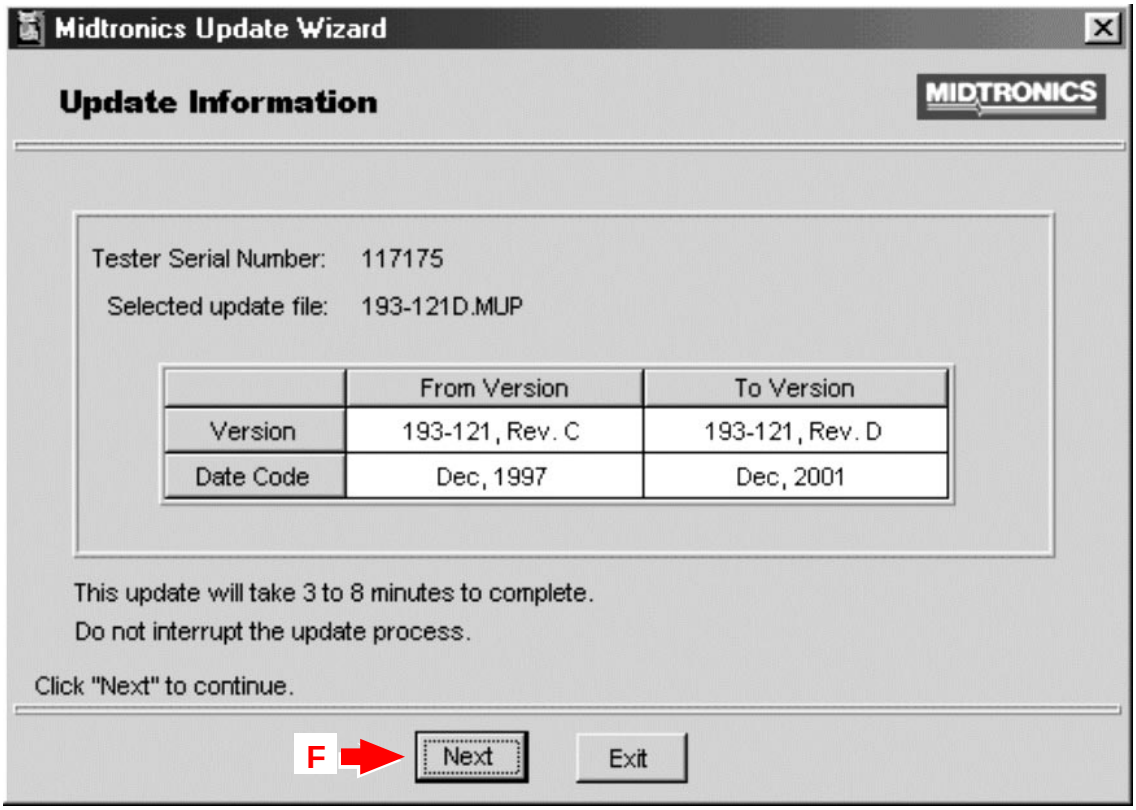

Figures 7–1 and 7–2 are confirmation dialogs that will pop up over the Update Information window (Figure 7) when:

- The update file is an older revision level than that found in the battery tester (Figure 7–1) or
- The update file is the same revision level as that found in the tester (Figure 7–2).

Click the “Yes” button to clear the pop–up dialog and continue with the update.

FIGURE 7–1.

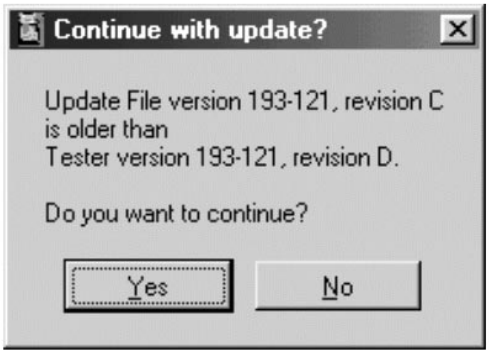

FIGURE 7–2.

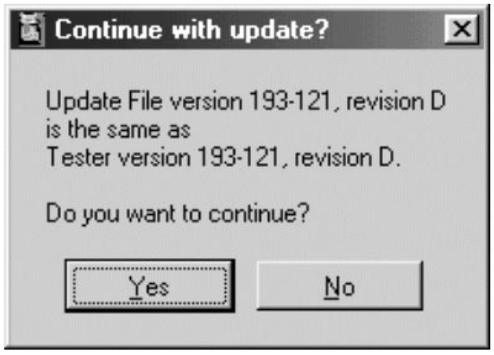

Operation Procedure (Continued)

G. The Midtronics Update Wizard (MUW) will now update the Midtronics Battery Tester software. (Figure 8.)

NOTE:
Do not interrupt this process (it will take approximately 5 minutes).

FIGURE 8.

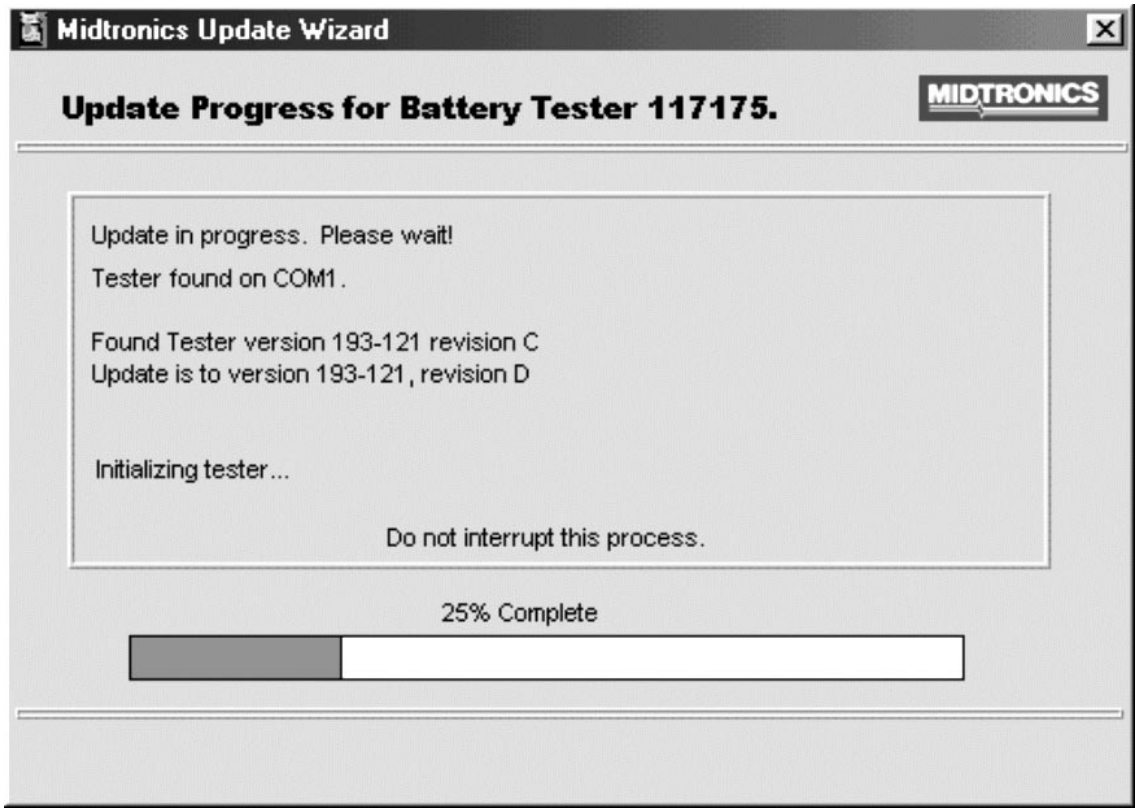

Operation Procedure (Continued)

H. Upon successful completion, the Update Results screen will display “No errors” and the update is now complete. Click on the “Exit” button. (Figure 9.)

FIGURE 9.

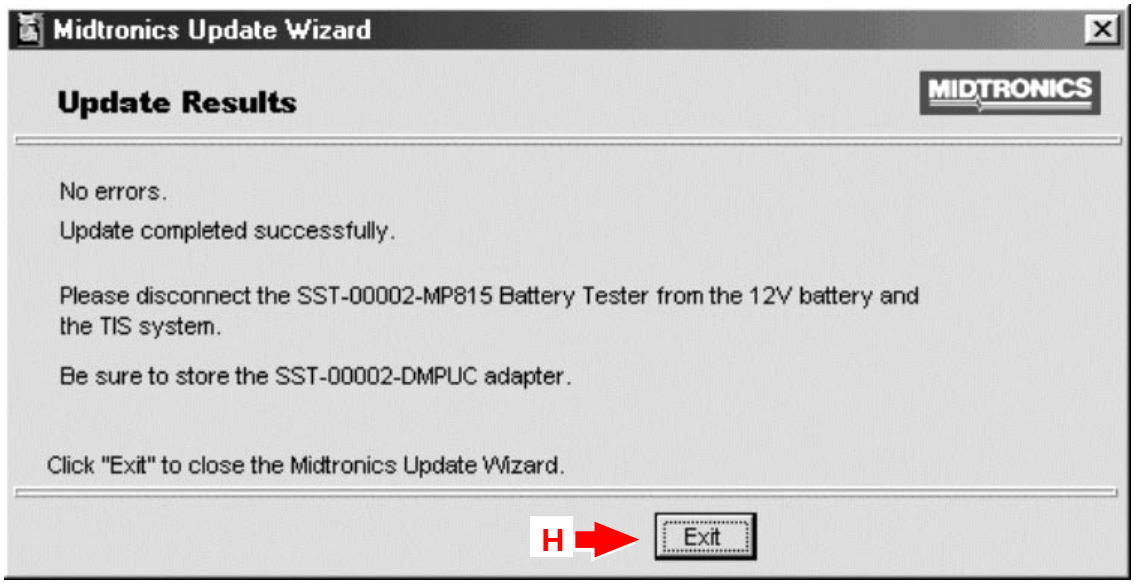

Your Midtronics Battery Tester is now updated and ready for use.

NOTE:

BE SURE TO REGULARLY CHECK TIS FOR FUTURE UPDATES:

- **The Midtronics Battery Tester OE Stock Number Card will no longer be printed and shipped. It will be distributed through TIS from now on.**
- **Latest versions of Tester update software will be available on TIS.**

LEXUS

Technical Service Information Bulletin

December 8, 2000

TSIB

Title:

DIAGNOSTIC TESTER COMMUNICATION ERROR WITH T.I.S.

Models:

All Models

Introduction

Certain Diagnostic Testers (SST P/N 02002019) may experience a communication error with the Technical Information System (T.I.S.). To correct this condition, the tester manufacturer, Vetronix Corporation, will recall and update affected units. The following explains how to determine which Diagnostic Testers may exhibit this problem and outlines the procedure to return the tester for repair.

Applicable Diagnostic Testers

Diagnostic Testers within the serial number range below are known to experience these communication errors.

STARTING SERIAL NUMBER	ENDING SERIAL NUMBER
31 000000	31 000100

Repair Procedure

1. Determine the Diagnostic Tester serial number located on the back of the tester (see Figure 1).
2. If the serial number is within the range listed above, call Vetronix Toyota Customer Service at 1-800-321-4889, ext. 3123, to obtain a pre-paid shipping package for the Diagnostic Tester.
3. The shipping package will arrive within 2 business days. Secure the tester in the provided package following the enclosed shipping instructions.

   Diagnostic Testers are guaranteed to be returned within 3 business days from receipt at Vetronix (except over holidays).

Figure 1
Back View of Diagnostic Tester

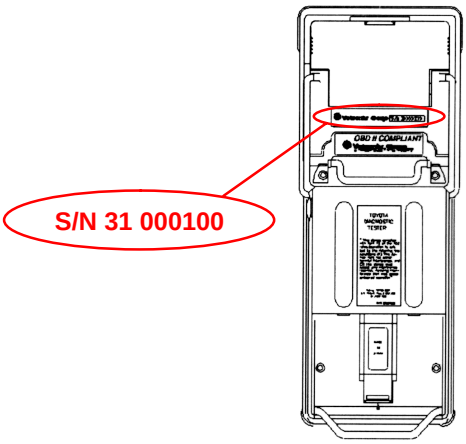

NOTE:
This update will be performed free of charge.

Diagnostic Testers outside of the serial number range above are not affected and do not need this repair. If a Diagnostic Tester outside this range experiences a similar problem, please call Dealer Daily Support at 1-877-DL-DAILY or Vetronix Toyota Customer Service at 1-800-321-4889, ext. 3123.

Warranty Information

OP CODE	DESCRIPTION	TIME	OPN	T1	T2
N/A	Not Applicable to Warranty	–	–	–	–

STEERING GEAR/STEERING WHEEL REMOVAL AND INSTALLATION

Anytime the steering gear is removed on a vehicle equipped with an SRS airbag, the steering wheel must also be removed. Use of the following steps for reinstallation and re–centering of the steering wheel will prevent possible damage to the spiral cable.

REQUIRED STEPS FOR STEERING GEAR REMOVAL AND INSTALLATION:

Removal:

- Place front wheels facing straight ahead.
- Remove the steering wheel pad.
- Remove the steering wheel.

Installation:

- Place front wheels facing straight ahead.
- Center the spiral cable.
- Install the steering wheel.
- Install the steering wheel pad.

STEERING GEAR/STEERING WHEEL REMOVAL PROCEDURES:

Follow the steps below to remove the steering wheel, before removing the steering gear, from the vehicle.

1. Place front wheels in the straight ahead position.
2. With ignition switch in lock position, disconnect the negative terminal of the battery.
3. Remove Steering wheel pad.

NOTICE: If the airbag connector is disconnected with the ignition switch at “ON” or “ACC,” a “Diagnostic Trouble Code” will be recorded.

Never use airbag parts from another vehicle. When replacing parts, replace with new parts.

a. Remove the steering wheel lower cover.

STEERING GEAR/STEERING WHEEL REMOVAL PROCEDURES (CONT'D):

b. Using a torx socket wrench, loosen the torx screws until the groove along the screw circumference catches on the screw case. SST 09042–00010. (See Fig. 1)

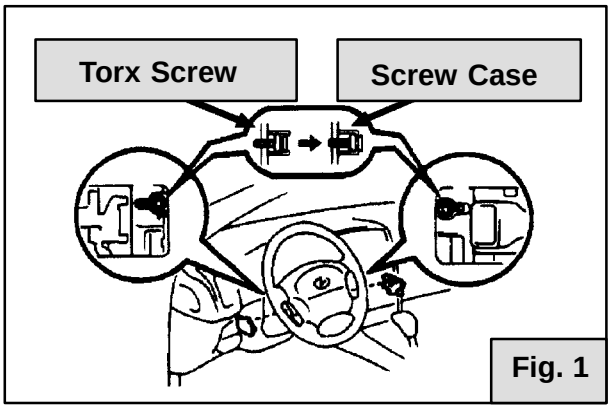

Fig. 1

c. Pull the wheel pad away from the steering wheel and disconnect the airbag connector. (See Fig. 2)

CAUTION: When storing the wheel pad, keep the upper surface of the pad facing up.

Never disassemble the wheel pad.

NOTICE: When removing the wheel pad, take care not to pull the airbag wiring harness.

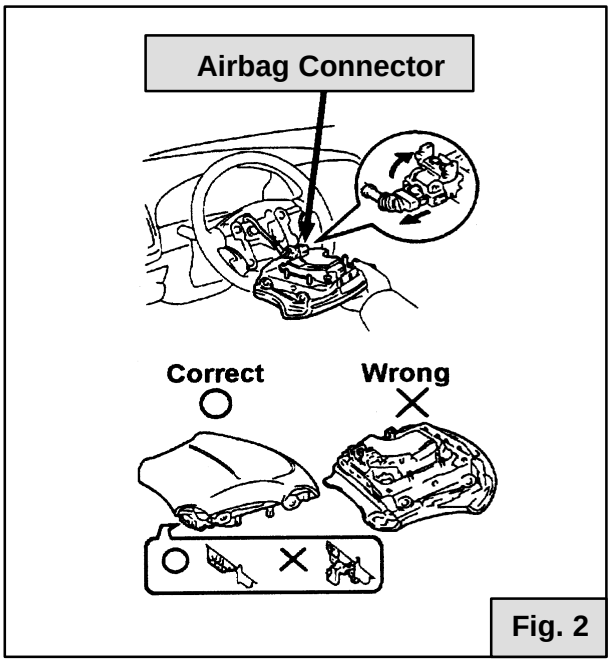

Fig. 2

4. Remove the steering wheel.

   a. Disconnect the spiral cable connector.

   b. Remove the wheel set nut.

   c. Place matchmarks on the wheel and steering main shaft. (See Fig. 3)

   d. Using the appropriate SST, remove the wheel. SST 09950–50010 (set includes 09951–05010, 09952–05010, 09953–05020, 09954–05020)

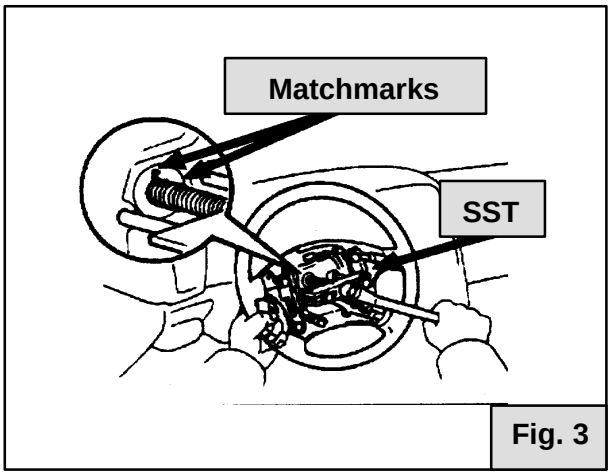

Fig. 3

For further disassembly of the steering column, refer to the Steering (SR) section of the Repair Manual.

STEERING GEAR/STEERING WHEEL INSTALLATION PROCEDURES:

Follow the steps below to install the steering wheel, after installing the steering gear.

1. Place front wheels in the straight ahead position.

STEERING GEAR/STEERING WHEEL INSTALLATION PROCEDURES (Cont'd):

2. Center spiral cable.
   a. Turn the cable counterclockwise by hand until it becomes harder to turn.
   b. Then rotate the cable clockwise about 2.5 or 3 turns to align the marks. (See Fig. 4)

NOTE: The number of turns clockwise varies by model. See the "SR" section of the vehicle's repair manual for the information.

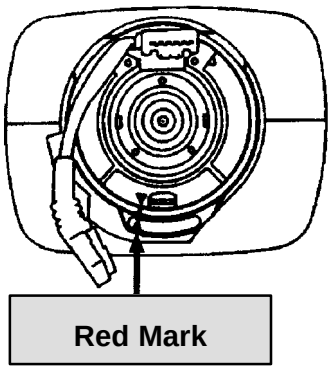

Fig. 4

3. Install the steering wheel.
   a. Align the matchmarks on the wheel and steering main shaft.
   b. Temporarily tighten the wheel set nut.
   c. Connect the spiral cable connector.
4. Bleed Power Steering System (when applicable).
5. Check steering wheel center point.
6. Torque steering wheel set nut. See the applicable vehicle's repair manual for the torque specification.
7. Install steering wheel pad.

NOTICE: Make Sure the pad is centered and installed to the specified torque.

If the pad has been dropped, or there are cracks, dents or other defects in the case or connector, replace the wheel pad with a new one.

When installing the pad, take care that the wiring does not interfere with other parts and is not pinched between other parts.

   a. Connect the airbag wiring connector.
   b. Install the pad after confirming that torx screws are in the screw case.
   c. Using a torx socket, torque the screws to the specification in the vehicle's repair manual.
      SST 09042–00010.
      (See Fig. 5)
   d. Install the steering wheel lower cover.

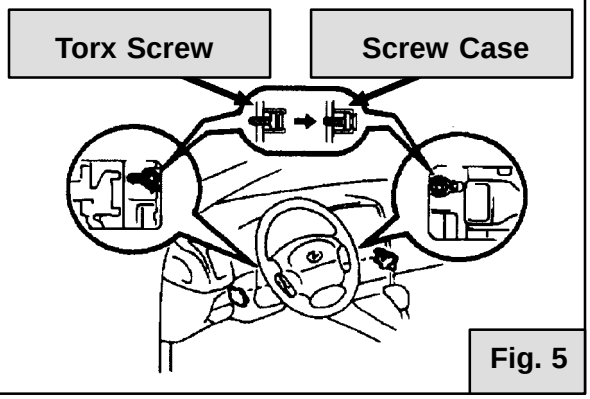

Fig. 5

SST (SPECIAL SERVICE TOOLS):

SSTs	TOOL NUMBER	TOOL NAME	APPLICATION
	09950–50010	Puller C Set	Power tilt/power telescoping steering column
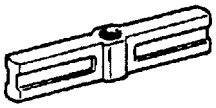	09951–05010	Hanger 150	
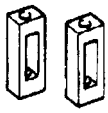	09952–05010	Slide Arm	
	09953–05020	Center Bolt 150	
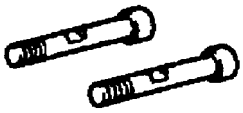	09954–05020	Claw No. 2	

RECOMMENDED TOOLS AND NECESSARY EQUIPMENT:

TOOL	TOOL NUMBER	TOOL NAME	APPLICATION
	09042–00010	Torx Socket T 30	Steering wheel pad

EQUIPMENT: Torque Wrench

LUBRICANT: ATF DEXRON II or III

LEXUS

Technical Service Information Bulletin

February 16, 2001

TSIB

Title:

STEERING WHEEL NUT SERVICE SPECIFICATION

Models:

All Applicable Models

Introduction

To make the steering wheel installation procedure similar for all models, the steering wheel nut tightening torque has been standardized.

Applicable Vehicles

MODEL		MODEL YEARS
LS 400	UCF10, 20	1990 – 2000
SC 400/300	JZZ31, UZZ30	1992 – 2000
GS 400/300	JZS147, 160, UZS160	1993 – 2000
ES 300	MCV10, 20	1994 – 2000
LX 450	FZJ80	1996 – 1997
LX 470	UZJ100	1998 – 2000
RX 300	MCU10, 15	1999 – 2000
IS 300	JCE10	2001

Service Information

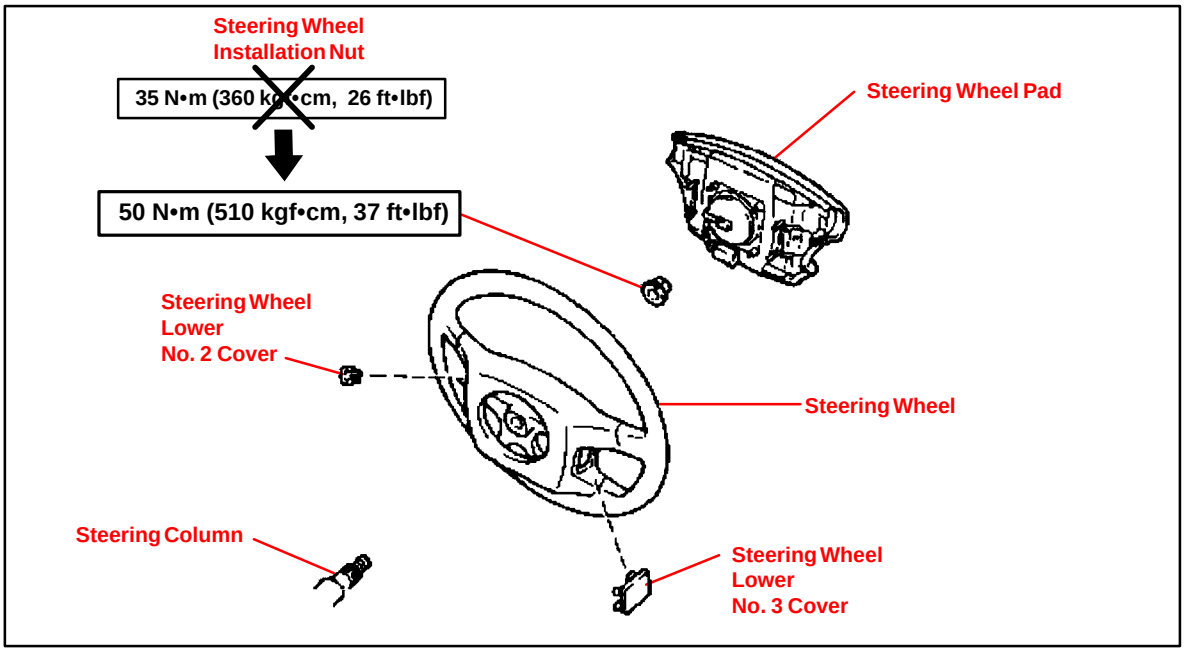

Warranty Information

OP CODE	DESCRIPTION	TIME	OPN	T1	T2
N/A	Not Applicable to Warranty	–	–	–	–

LEXUS

TECHNICAL SERVICE INFORMATION

REF: SUSPENSION

NO: SU002–96

DATE: MARCH 29, 1996

MODEL: ALL MODELS

Title **1996 MY WHEEL ALIGNMENT SPECIFICATIONS**

For your reference listed are the alignment specifications for all 1996 model year vehicles.

MODEL	FRONT					REAR			
	TOTAL TOE			CAMBER	CASTER	TOTAL TOE			CAMBER
	DEG	IN	MM	DEG	DEG	DEG	IN	MM	DEG
LS 400 (without Air Suspension)	0.3±0.2	0.12±0.08	3±2	0.33±0.75	7.00±0.75	0.2±0.2	0.08±0.08	2±2	–0.83±0.75
LS 400 (with Air Suspension)	0.1±0.2	0.04±0.08	1±2	0.08±0.75	7.42±0.75	0.3±0.2	0.12±0.08	3±2	–1.42±0.75
SC 300	0.1±0.2	0.04±0.08	1±2	0.02±0.75	2.93±0.75	04±0.1 –0.3	0.16+0.04 –0.12	4±1 –3	–0.88±0.75
SC 400	0.1±0.2	0.04±0.08	1±2	0.02±0.75	2.93±0.75	0.4±0.1 –0.3	0.16+0.04 –0.12	4±1 –3	–0.88±0.75
GS 300	0.1±0.2	0.04±0.08	1±2	–0.25±0.75	7.10±0.75	0.4±0.2	0.16±0.08	4±2	–1.00±0.75
ES 300	0±0.2	0±0.08	0±2	–0.67±0.75	1.25±0.75	0.4±0.2	0.16±0.08	4±2	–0.50±0.75
LX 450	0.2±0.2	0.16±0.16	2±2	1.0±0.75	3.0±1.0	0*	0*	0*	0*

* Not Adjustable

LEXUS

Technical Service Information Bulletin

August 1, 1997

TSIB

Title:

‘P’ OR ‘N’ TO ‘R’ DELAYED ENGAGEMENT

Models:

LX 450

Introduction

The B3 Brake Return Spring, B3 Brake Piston Rings, and Low Coast Modulator Spring have been changed to improve “**P**ark to **R**everse” or “**N**eutral to **R**everse” shift operation.

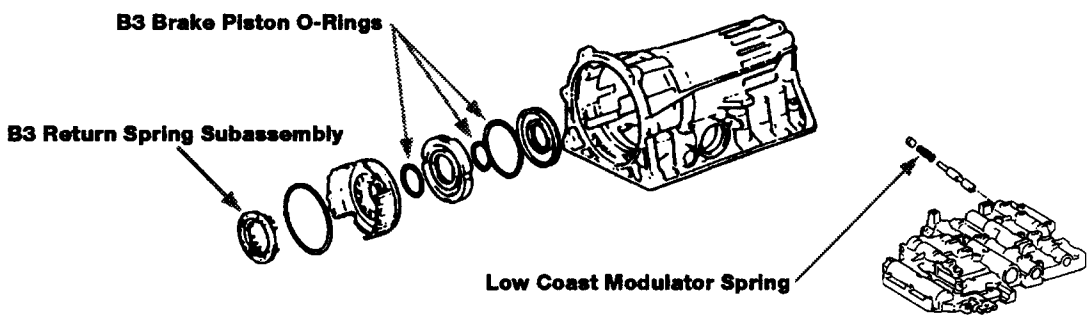

Affected Vehicles

- **LX 450** with **A343F** transmission.

Production Change Information

PRODUCTION CHANGE	A/T SERIAL NUMBER
B3 Brake Return Spring Assembly and Low Coast Modulator Valve Compression Spring	96JE–06161
O–Rings	97AE–07106

Parts Information

OLD PART NUMBER	NEW PART NUMBER	PART NAME
35068–30011	35068–50010	Spring, Subassembly, 1st & Reverse Brake Return
90501–08088	90501–08169	Spring, Compression, for Low Coast Modulator Valve
90301–99193	90301–99084	O–Ring for Outer Brake Piston
90301–57188	90301–56007	O–Ring for Inner Brake Piston
90301–68191	90301–67005	O–Ring for Inner Brake Reactive Sleeve
04351–60090	same	Gasket Kit, Transmission Overhaul

NOTE:
Part Number for Transmission Assembly has not been changed.

Warranty Information

- No Applicable Warranty Information.

Modification Details

1. Springs were added to B3 Brake Return Spring Subassembly.

	PREVIOUS	NEW
Number of Springs	16	20

2. Material for B3 Brake Piston O–rings has been changed.

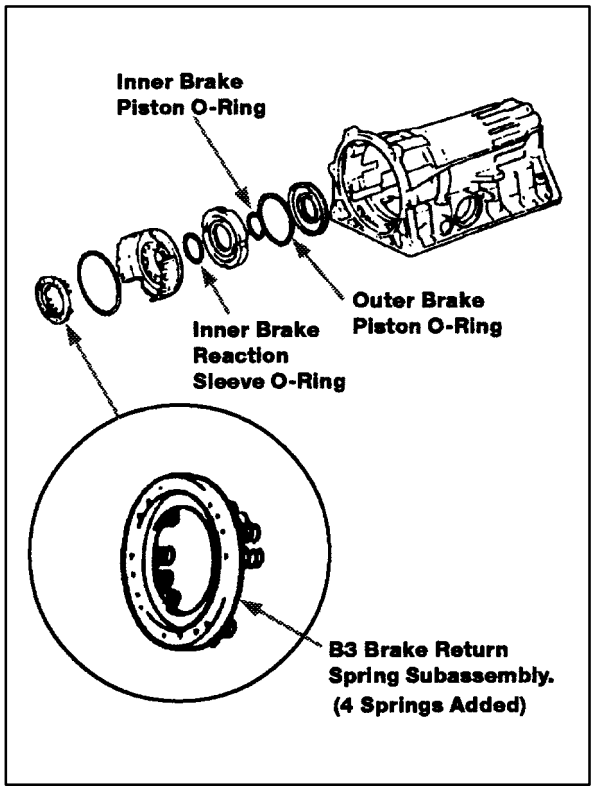

3. Length of compression spring for Low Coast Modulator Valve has been changed.

	PREVIOUS	NEW
Length A	30.42 mm (1.198 in.)	32.07 mm (1.263 in.)
Diameter B	8.26 mm (0.325 in.)	8.26 mm (0.325 in.)
Color Code	Light Green	Purple

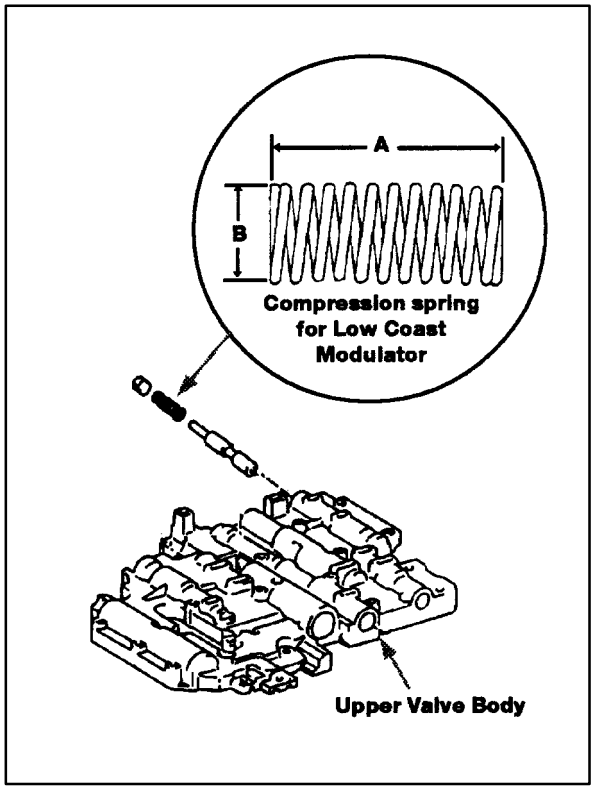

LEXUS

Technical Service Information Bulletin

June 19, 1998

TSIB

Title:

AUTOMATIC TRANSMISSION FLUID TYPE T-IV

Models:

All Models

Introduction

The introduction of Automatic Transmission Fluid type T–IV makes type T–II obsolete. Use type T–IV for all applications that specify ATF type T–II.

Affected Vehicles

- All vehicles with Automatic Transmissions specified to use **ATF Types T–II or T–IV.**

	TYPE OF ATF			
SPECIFIED ATF	**Dextron®–III**	**TYPE T**	**TYPE T–II**	**TYPE T–IV**
Dextron®–II or III	**OK**	X	X	X
TYPE T	X	**OK**	X	X
TYPE T–II	X	X	**OK**	**OK**
TYPE T–IV	X	X	X	**OK**
X = NOT USABLE				

Parts Information

SIZE	NEW PART NUMBER	PART NAME
4 Liter	08886–01705	ATF type T–IV

Warranty Information

OP CODE	DESCRIPTION	TIME	OPN	T1	T2
N/A	Not Applicable to Warranty	–	–	–	–

Title:
AUTOMATIC TRANSMISSION FLUIDS
Models:
All Models

REVISION NOTICE:
The information contained in this TSIB updates TC003–98 dated June 19, 1998.

Introduction

Automatic Transmission Fluid Type T–IV now replaces Type T–II fluid. Use Type T–IV for all applications that specify ATF Type T–II.

Please refer to the following table for the interchangeability between each ATF.

Applicable Vehicles

- **All vehicles produced after 1990 with Automatic Transmissions specified to use ATF Type T, T–II and T–IV.**

SPECIFIED ATF	TYPE OF ATF			
	DEXRON® II OR III	TYPE T	TYPE T–II	TYPE T–IV
DEXRON® II OR III	OK	X	X	X
TYPE T	X	OK	X	OK
TYPE T–II	X	X	OK	OK
TYPE T–IV	X	X	X	OK
X = NOT USABLE				

NOTICE:
With the exception of mixing ATF Type T with Type T–IV fluids, different types of fluids must not be mixed.

Parts Information

SIZE	NEW PART NUMBER	PART NAME
4 Liter	08886–01705	ATF Type T–IV

Warranty Information

OPCODE	DESCRIPTION	TIME	OPN	T1	T2
N/A	Not Applicable to Warranty	–	–	–	–

Title:
O2S TEST RESULTS (MODE 05)
Models:
All '96 – '03 & '04 RX 330

Introduction

This Service Bulletin contains Oxygen Sensor (O2S) Monitor threshold values for all models from 1996 to 2003 and some 2004 models. Starting in 2004, the O2S Monitor threshold values can be found in the repair manual. These values are used when analyzing the O2S test results to determine the O2S condition.

Applicable Vehicles

- **All 1996 – 2003** model year **Lexus** vehicles.
- **2004** model year **RX 330** vehicles.

Function Description

Checking O2S Test Results

To view O2S test results, the O2S Monitor must be completed and the test results must be checked within the same key cycle. If the ignition key is cycled OFF, the O2S test results will be set to the minimum or maximum limits, and all test results will be erased. The O2S test results are stored in the ECU (SAE term: Powertrain Control Module/PCM) when the monitor is complete. The test results are static and will not change once the monitor is complete.

The process for checking O2S test results is described in the following three basic steps:

1. Completing the O2S Readiness Monitor (page 2).
2. Accessing O2S Test Results (page 3).
3. Comparing O2S Test Results to Failure Thresholds (page 4).

Required SSTs

SPECIAL SERVICE TOOLS (SSTs)	PART NUMBER	QUANTITY
Lexus Diagnostic Tester Kit* (or any OBDII Scantool)	01001270	1
12 Megabyte Diagnostic Tester Program Card with version 10.1a Software (or later)*	01002593-005	1

* Essential SSTs.

NOTE:
Additional Diagnostic Tester Kits, Program Cards or other SSTs may be ordered by calling SPX/OTC at 1-800-933-8335.

Warranty Information

OP CODE	DESCRIPTION	TIME	OFP	T1	T2
N/A	Not Applicable to Warranty	–	–	–	–

Completing O2S Readiness Monitor

1. Clear any stored Diagnostic Trouble Codes (DTCs) using the Lexus Diagnostic Tester.
2. Start the engine.
3. Perform the drive pattern below to run and complete the Oxygen Sensor (O2S) Monitor.

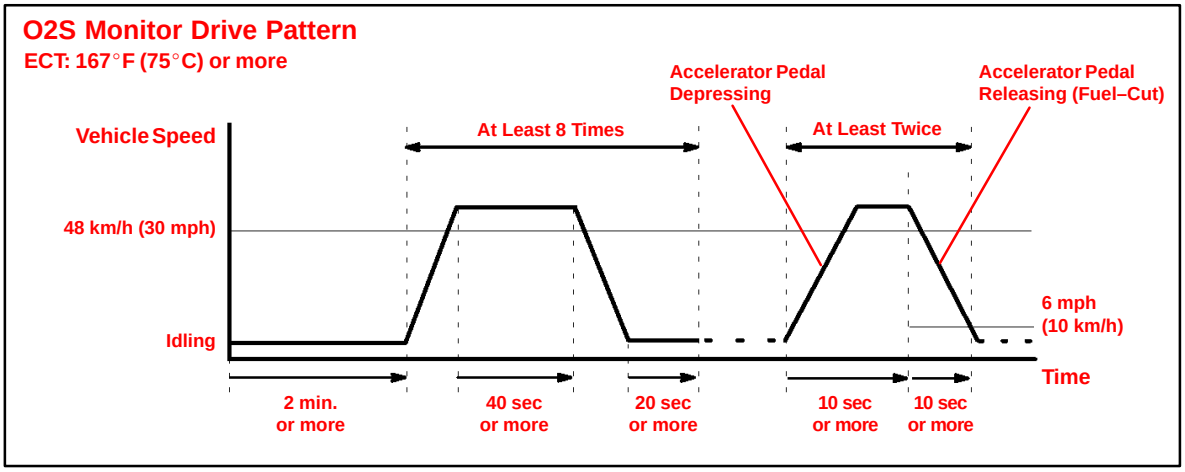

HINT:

The O2S Monitor is completed when the following conditions are met:

- **Two (2) minutes or more passed after the engine start.**
- **The Engine Coolant Temperature (ECT) is 167°F (75°C) or more.**
- **Cumulative running time at 30 mph (48 km/h) or more exceeds 6 minutes.**
- **Vehicle is in closed loop.**
- **The fuel–cut is operated for 8 seconds or more (for Rear O2S Monitor).**

A. Allow the engine to idle for two minutes.

B. Warm up the engine until the Engine Coolant Temperature (ECT) reaches 167°F (75°C).

C. Drive the vehicle over 30 mph (48 km/h) for more than 40 seconds.

D. Stop the vehicle and allow the engine to idle for more than 20 seconds.

E. Repeat steps C and D at least 8 times in one driving cycle. (Do not cycle the ignition key.)

In addition, perform the following steps for the Rear O2S Readiness Monitor:

A. Select second gear.

B. Allow the vehicle to run at 30 mph (48 km/h) or more.

C. Keep the accelerator pedal “off–idle” for more than 10 seconds.

D. Immediately after step C, release the accelerator pedal for at least 10 seconds without depressing the brake pedal (to execute the fuel–cut).

E. Decelerate the vehicle until the vehicle speed reaches less than 6 mph (10 km/h).

F. Repeat steps B – E at least twice in one driving cycle.

Accessing O2S Test Results

1. On the Diagnostic Tester* screen, select the following menus:
   - DIAGNOSTICS
   - CARB OBD II
   - O2S TEST RESULTS

   A list of the available oxygen sensors will be displayed.

2. Select the desired oxygen sensor and press Enter.

NOTE:
The monitor result of the A/F sensor will not be displayed. If you select "Bank 1–Sensor 1" or Bank 2–Sensor 1" for a vehicle equipped with an A/F sensor, the Diagnostic Tester will display "No parameter to display."

3. Compare the test results with the values listed in the Failure Threshold Chart.

O2S TEST RESULT Screen

01 BANK 1 – SENSOR 1
01 BANK 1 – SENSOR 2
01 BANK 2 – SENSOR 1
01 BANK 2 – SENSOR 2

TEST DATA Screen

LOW SW V • • • •	**0.400 V**
HIGH SW V • • • •	**0.550 V**
MIN O2S V • • • •	**0.100 V**
MAX O2S V • • • •	**0.900 V**
TIME $81 • • • • •	**17**

* Although this procedure references the Lexus Diagnostic Tester, the O2S test results can be checked using a generic OBDII scantool. Refer to your OBDII scantool operator's manual for specific procedures.

Comparing O2S Test Results to Failure Thresholds

1. Determine the correct O2S Failure Threshold Chart for your vehicle by looking in the "O2S Application Table," pages 5 – 6 in this bulletin.
2. Select appropriate year, model, and engine for specified O2S Failure Threshold Chart.
3. Compare O2S test results with the specified O2S Failure Threshold Chart. It may be necessary to convert O2S test results to a specific measurement unit using the conversion factor that is supplied in the specified table. See example below:

Example:

A. The Diagnostic Tester displays "17" as a value of the "Time $81" (see illustration).

B. Find the Conversion Factor value of "Time $81" in the O2S Failure Threshold chart below. 0.3906 is specified for Time $81 in this chart.

C. Multiply "17" in step "A" by 0.3906 (Conversion Factor) in step "B." **17 x 0.3906 = 6.6 %**

D. If the answer is within the Standard Value of TEST LIMIT, the "Time $81" can be confirmed to be normal.

Example

LOW SW V • • • •	**0.400 V**
HIGH SW V • • • •	**0.550 V**
MIN O2S V • • • •	**0.035 V**
MAX O2S V • • • •	**0.835 V**
Time $81	**17**
Time $84	**84**
Time $85	**79**

NOTE:

- **"LOW SW V" indicates the O2S voltage when the O2S status changes from rich to lean.**
- **"HIGH SW V" indicates the O2S voltage when the O2S status changes from lean to rich.**
- **If the O2S voltage is lower than "LOW SW V," the O2S status is lean.**
- **If the O2S voltage is higher than "HIGH SW V," the O2S status is rich.**

Example of O2S Failure Threshold Chart:

TEST ID	DESCRIPTION OF TEST DATA	CONVERSION FACTOR	UNIT	STANDARD VALUE OF TEST LIMIT
Time $81	Percentage of monitoring time where Oxygen Sensor voltage is less than 0.05V	Multiply 0.3906	%	Within 60%

NOTE:

Before the O2S Monitor completes or after the ignition switch is turned OFF, the Diagnostic Tester displays the viewable upper limit or a lower limit of the test value (example: 0 V, 1.275 V, 0 s [seconds], 10.2 s, 0 and 255).

O2S Application Table

MODEL YEAR	MODEL	ENGINE	CERTIFICATION	SEE CHART NO. (TSB PAGE)
1996	ALL		50–State	1 (p. 7)
1997	ALL		50–State	1 (p. 7)
1998	ES 300	1MZ–FE	California	3 (p. 9)
			Federal	1 (p. 7)
	GS 300	2JZ–GE	50–State	2 (p. 8)
	GS 400	1UZ–FE	50–State	
	LS 400	1UZ–FE	50–State	
	LX 470	2UZ–FE	50–State	
	SC 300	2JZ–GE	50–State	
	SC 400	1UZ–FE	50–State	
1999	ES 300	1MZ–FE	50–State	3 (p. 9)
	GS 300	2JZ–GE	50–State	2 (p. 8)
	GS 400	1UZ–FE	50–State	
	LS 400	1UZ–FE	50–State	
	LX 470	2UZ–FE	50–State	
	RX 300	1MZ–FE	50–State	3 (p. 9)
	SC 300	2JZ–GE	50–State	2 (p. 8)
	SC 400	1UZ–FE	50–State	
2000	ES 300	1MZ–FE	50–State	3 (p. 9)
	GS 300	2JZ–GE	50–State	2 (p. 8)
	GS 400	1UZ–FE	50–State	
	LS 400	1UZ–FE	50–State	
	LX 470	2UZ–FE	50–State	
	RX 300	1MZ–FE	50–State	3 (p. 9)
	SC 300	2JZ–GE	50–State	2 (p. 8)
	SC 400	1UZ–FE	50–State	
2001	ES 300	1MZ–FE	50–State	3 (p. 9)
	GS 300	2JZ–GE	50–State	1 (p. 7)
	GS 430	3UZ–FE	50–State	
	IS 300	2JZ–GE	50–State	
	LS 430	3UZ–FE	50–State	
	LX 470	2UZ–FE	50–State	
	RX 300	1MZ–FE	50–State	4 (p. 9)

O2S Application Table (Continued)

MODEL YEAR	MODEL	ENGINE	CERTIFICATION	SEE CHART NO. (TSB PAGE)
2002	ES 300	1MZ–FE	50–State	8 (p. 13)
	GS 300	2JZ–GE	50–State	5 (p. 10)
	GS 430	3UZ–FE	50–State	6 (p. 11)
	IS 300	2JZ–GE	50–State	5 (p. 10)
	LS 430	3UZ–FE	50–State	6 (p. 11)
	LX 470	2UZ–FE	50–State	7 (p. 12)
	RX 300	1MZ–FE	50–State	13 (p. 22)
	SC 430	3UZ–FE	50–State	6 (p. 11)
2003	ES 300	1MZ–FE	50–State	8 (p. 13)
	GS 300	2JZ–GE	50–State	9 (p. 14–15)
	GS 430	3UZ–FE	50–State	10 (p. 16–17)
	GX 470	2UZ–FE	50–State	11 (p. 18–19)
	IS 300	2JZ–GE	50–State	9 (p. 14–15)
	LS 430	3UZ–FE	50–State	10 (p. 16–17)
	LX 470	2UZ–FE	50–State	12 (p. 20–21)
	RX 300	1MZ–FE	50–State	13 (p. 22)
	SC 430	3UZ–FE	50–State	10 (p. 16–17)
2004	RX 330	3MZ–FE	50–State	14 (p. 23)

O2S Failure Threshold Charts

CHART 1:

Front O2S (Bank 1 Sensor 1 and Bank 2 Sensor 1) Voltage Monitor

Related DTCs: P0130, P0150, P2195, P2196, P2197 and P2198

TEST ID	DESCRIPTION OF TEST DATA	CONVERSION FACTOR	UNIT	STANDARD VALUE OF TEST LIMIT
Time $07	The minimum voltage during O2S monitoring	N/A	V	Between 0 and 0.4 V
Time $08	The maximum voltage during O2S monitoring	N/A	V	Between 0.55 and 1.275 V

If the sensor voltage is out of the standard value, the ECM interprets this as a malfunction.

Front O2S (Bank 1 Sensor 1 and Bank 2 Sensor 1) Response Monitor

Related DTCs: P0133 and P0153

TEST ID	DESCRIPTION OF TEST DATA	CONVERSION FACTOR	UNIT	STANDARD VALUE OF TEST LIMIT
Time $31	Time to change from Lean (≤0.4 V) to Rich (≥0.55 V)	N/A	Second	Between 0 and 1 second
Time $32	Time to change from Rich (≥0.55 V) to Lean (≥0.4 V)	N/A	Second	Between 0 and 1 second

If the time required to change is out of the standard value, the ECM interprets this as a malfunction.

Rear O2S (Bank 1 Sensor 2 and Bank 2 Sensor 2) Voltage Monitor

Related DTCs: P0136 and P0156

TEST ID	DESCRIPTION OF TEST DATA	CONVERSION FACTOR	UNIT	STANDARD VALUE OF TEST LIMIT
Time $07	The minimum voltage during O2S monitoring	N/A	V	Between 0 and 0.4 V
Time $08	The maximum voltage during O2S monitoring	N/A	V	Between 0.5 and 1.275 V

If the sensor voltage is out of the standard value, the ECM interprets this as a malfunction.

O2S Failure Threshold Charts (Continued)

CHART 2:

Front O2S (Bank 1 Sensor 1 and Bank 2 Sensor 1) Voltage Monitor

Related DTCs: P0130, P0150, P2195, P2196, P2197 and P2198

TEST ID	DESCRIPTION OF TEST DATA	CONVERSION FACTOR	UNIT	STANDARD VALUE OF TEST LIMIT
Time $07	The minimum voltage during O2S monitoring	N/A	V	Between 0 and 0.35 V
Time $08	The maximum voltage during O2S monitoring	N/A	V	Between 0.55 and 1.275 V

If the sensor voltage is out of the standard value, the ECM interprets this as a malfunction.

Front O2S (Bank 1 Sensor 1 and Bank 2 Sensor 1) Response Monitor

Related DTCs: P0133 and P0153

TEST ID	DESCRIPTION OF TEST DATA	CONVERSION FACTOR	UNIT	STANDARD VALUE OF TEST LIMIT
Time $31	Time to change from Lean (≤0.35 V) to Rich (≥0.55 V)	N/A	Second	Between 0 and 1.1 seconds
Time $32	Time to change from Rich (≥0.55 V) to Lean (≥0.35 V)	N/A	Second	Between 0 and 1.1 seconds

If the time required to change is out of the standard value, the ECM interprets this as a malfunction.

Rear O2S (Bank 1 Sensor 2 and Bank 2 Sensor 2) Voltage Monitor

Related DTCs: P0136 and P0156

TEST ID	DESCRIPTION OF TEST DATA	CONVERSION FACTOR	UNIT	STANDARD VALUE OF TEST LIMIT
Time $07	The minimum voltage during O2S monitoring	N/A	V	Between 0 and 0.4 V
Time $08	The maximum voltage during O2S monitoring	N/A	V	Between 0.5 and 1.275 V

If the sensor voltage is out of the standard value, the ECM interprets this as a malfunction.

O2S Failure Threshold Charts (Continued)

CHART 3:

Rear O2S (Bank 1 Sensor 2 and Bank 2 Sensor 2) Voltage Monitor
Related DTCs: P0136 and P0156

TEST ID	DESCRIPTION OF TEST DATA	CONVERSION FACTOR	UNIT	STANDARD VALUE OF TEST LIMIT
Time $07	The minimum voltage during O2S monitoring	N/A	V	Between 0 and 0.45 V
Time $08	The maximum voltage during O2S monitoring	N/A	V	Between 0.6 and 1.275 V

If the sensor voltage is out of the standard value, the ECM interprets this as a malfunction.

CHART 4:

Rear O2S (Bank 1 Sensor 2 and Bank 2 Sensor 2) Voltage Monitor
Related DTCs: P0136 and P0156

TEST ID	DESCRIPTION OF TEST DATA	CONVERSION FACTOR	UNIT	STANDARD VALUE OF TEST LIMIT
Time $07	The minimum voltage during O2S monitoring	N/A	V	Between 0 and 0.5 V
Time $08	The maximum voltage during O2S monitoring	N/A	V	Between 0.6 and 1.275 V

If the sensor voltage is out of the standard value, the ECM interprets this as a malfunction.

O2S Failure Threshold Charts (Continued)

CHART 5:

Front O2S (Bank 1 Sensor 1 and Bank 2 Sensor 1) Voltage Monitor

Related DTCs: P0130, P0150, P2195, P2196, P2197 and P2198

TEST ID	DESCRIPTION OF TEST DATA	CONVERSION FACTOR	UNIT	STANDARD VALUE OF TEST LIMIT
Time $07	The minimum voltage during O2S monitoring	N/A	V	Between 0 and 0.4 V
Time $08	The maximum voltage during O2S monitoring	N/A	V	Between 0.55 and 1.275 V

If the sensor voltage is out of the standard value, the ECM interprets this as a malfunction.

Front O2S (Bank 1 Sensor 1 and Bank 2 Sensor 1) Response Monitor

Related DTCs: P0133 and P0153

TEST ID	DESCRIPTION OF TEST DATA	CONVERSION FACTOR	UNIT	STANDARD VALUE OF TEST LIMIT
Time $31	Time to change from Lean (≤0.4 V) to Rich (≥0.55 V)	N/A	Second	Between 0 and 0.9 seconds
Time $32	Time to change from Rich (≥0.55 V) to Lean (≤0.4 V)	N/A	Second	Between 0 and 0.9 seconds

If the time required to change is out of the standard value, the ECM interprets this as a malfunction.

Rear O2S (Bank 1 Sensor 2 and Bank 2 Sensor 2) Voltage Monitor

Related DTCs: P0136 and P0156

TEST ID	DESCRIPTION OF TEST DATA	CONVERSION FACTOR	UNIT	STANDARD VALUE OF TEST LIMIT
Time $07	The minimum voltage during O2S monitoring	N/A	V	Between 0 and 0.4 V
Time $08	The maximum voltage during O2S monitoring	N/A	V	Between 0.5 and 1.275 V

If the sensor voltage is out of the standard value, the ECM interprets this as a malfunction.

Rear O2S (Bank 1 Sensor 2 and Bank 2 Sensor 2) Element Monitor

Related DTCs: P0136 and P0156

TEST ID	DESCRIPTION OF TEST DATA	CONVERSION FACTOR	UNIT	STANDARD VALUE OF TEST LIMIT
Time $81	Percentage of monitoring time where Oxygen Sensor voltage is less than 0.05 V	Multiply 0.3906	%	Between 0 and 80% (A/T) Between 0 and 90% (M/T)
Time $84	Percentage of monitoring time where Oxygen Sensor voltage is 0.70 V or more	Multiply 0.3906	%	Between 20 and 100%
Time $85	Maximum Rich (≤0.45 V) time	Multiply 0.2621	Second	Between 20 and 66.8 seconds

If all the values (Time $81, Time $84 and Time $85) are out of the standard values, the ECM interprets this as a malfunction.

O2S Failure Threshold Charts (Continued)

CHART 6:

Rear O2S (Bank 1 Sensor 1 and Bank 2 Sensor 1) Voltage Monitor

Related DTCs: P0130, P0150, P2195, P2196, P2197 and P2198

TEST ID	DESCRIPTION OF TEST DATA	CONVERSION FACTOR	UNIT	STANDARD VALUE OF TEST LIMIT
Time $07	The minimum voltage during O2S monitoring	N/A	V	Between 0 and 0.4 V
Time $08	The maximum voltage during O2S monitoring	N/A	V	Between 0.55 and 1.275 V

If the sensor voltage is out of the standard value, the ECM interprets this as a malfunction.

Front O2S (Bank 1 Sensor 1 and Bank 2 Sensor 1) Response Monitor

Related DTCs: P0133 and P0153

TEST ID	DESCRIPTION OF TEST DATA	CONVERSION FACTOR	UNIT	STANDARD VALUE OF TEST LIMIT
Time $31	Time to change from Lean (≤0.4 V) to Rich (≥0.55 V)	N/A	Second	Between 0 and 0.9 seconds
Time $32	Time to change from Rich (≥0.55 V) to Lean (≤0.4 V)	N/A	Second	Between 0 and 0.9 seconds

If the time required to change is out of the standard value, the ECM interprets this as a malfunction.

Rear O2S (Bank 1 Sensor 2 and Bank 2 Sensor 2) Voltage Monitor

Related DTCs: P0136 and P0156

TEST ID	DESCRIPTION OF TEST DATA	CONVERSION FACTOR	UNIT	STANDARD VALUE OF TEST LIMIT
Time $07	The minimum voltage during O2S monitoring	N/A	V	Between 0 and 0.4 V
Time $08	The maximum voltage during O2S monitoring	N/A	V	Between 0.5 and 1.275 V

If the sensor voltage is out of the standard value, the ECM interprets this as a malfunction.

Rear O2S (Bank 1 Sensor 2 and Bank 2 Sensor 2) Element Monitor

Related DTCs: P0136 and P0156

TEST ID	DESCRIPTION OF TEST DATA	CONVERSION FACTOR	UNIT	STANDARD VALUE OF TEST LIMIT
Time $81	Percentage of monitoring time where Oxygen Sensor voltage is less than 0.05 V	Multiply 0.3906	%	Between 0 and 60%
Time $84	Percentage of monitoring time where Oxygen Sensor voltage is 0.70 V or more	Multiply 0.3906	%	Between 20 and 100%
Time $85	Maximum Rich (≤0.45 V) time	Multiply 0.2621	Second	Between 20 and 66.8 seconds

If all the values (Time $81, Time $84 and Time $85) are out of the standard values, the ECM interprets this as a malfunction.

O2S Failure Threshold Charts (Continued)

CHART 7:

Front O2S (Bank 1 Sensor 1 and Bank 2 Sensor 1) Voltage Monitor

Related DTCs: P0130, P0150, P2195, P2196, P2197 and P2198

TEST ID	DESCRIPTION OF TEST DATA	CONVERSION FACTOR	UNIT	STANDARD VALUE OF TEST LIMIT
Time $07	The minimum voltage during O2S monitoring	N/A	V	Between 0 and 0.4 V
Time $08	The maximum voltage during O2S monitoring	N/A	V	Between 0.55 and 1.275 V

If the sensor voltage is out of the standard value, the ECM interprets this as a malfunction.

Front O2S (Bank 1 Sensor 1 and Bank 2 Sensor 1) Response Monitor

Related DTCs: P0133 and P0153

TEST ID	DESCRIPTION OF TEST DATA	CONVERSION FACTOR	UNIT	STANDARD VALUE OF TEST LIMIT
Time $31	Time to change from Lean (≤0.4 V) to Rich (≥0.55 V)	N/A	Second	Between 0 and 0.9 seconds
Time $32	Time to change from Rich (≥0.55 V) to Lean (≤0.4 V)	N/A	Second	Between 0 and 0.9 seconds

If the time required to change is out of the standard value, the ECM interprets this as a malfunction.

Rear O2S (Bank 1 Sensor 2 and Bank 2 Sensor 2) Voltage Monitor

Related DTCs: P0136 and P0156

TEST ID	DESCRIPTION OF TEST DATA	CONVERSION FACTOR	UNIT	STANDARD VALUE OF TEST LIMIT
Time $07	The minimum voltage during O2S monitoring	N/A	V	Between 0 and 0.4 V
Time $08	The maximum voltage during O2S monitoring	N/A	V	Between 0.5 and 1.275 V

If the sensor voltage is out of the standard value, the ECM interprets this as a malfunction.

Rear O2S (Bank 1 Sensor 2 and Bank 2 Sensor 2) Element Monitor

Related DTCs: P0136 and P0156

TEST ID	DESCRIPTION OF TEST DATA	CONVERSION FACTOR	UNIT	STANDARD VALUE OF TEST LIMIT
Time $81	Percentage of monitoring time where Oxygen Sensor voltage is less than 0.05 V	Multiply 0.3906	%	Between 0 and 90%
Time $84	Percentage of monitoring time where Oxygen Sensor voltage is 0.70 V or more	Multiply 0.3906	%	Between 20 and 100%
Time $85	Maximum Rich (≤0.45 V) time	Multiply 0.2621	Second	Between 20 and 66.8 seconds

If all the values (Time $81, Time $84 and Time $85) are out of the standard values, the ECM interprets this as a malfunction.

O2S Failure Threshold Charts (Continued)

CHART 8:

Front O2S (Bank 1 Sensor 2 and Bank 2 Sensor 2) Voltage Monitor

Related DTCs: P0136 and P0156

TEST ID	DESCRIPTION OF TEST DATA	CONVERSION FACTOR	UNIT	STANDARD VALUE OF TEST LIMIT
Time $07	The minimum voltage during O2S monitoring	N/A	V	Between 0 and 0.5 V
Time $08	The maximum voltage during O2S monitoring	N/A	V	Between 0.6 and 1.275 V

If the sensor voltage is out of the standard value, the ECM interprets this as a malfunction.

Rear O2S (Bank 1 Sensor 2 and Bank 2 Sensor 2) Element Monitor

Related DTCs: P0136 and P0156

TEST ID	DESCRIPTION OF TEST DATA	CONVERSION FACTOR	UNIT	STANDARD VALUE OF TEST LIMIT
Time $81	Percentage of monitoring time where Oxygen Sensor voltage is less than 0.05 V	Multiply 0.3906	%	Between 0 and 95%
Time $84	Percentage of monitoring time where Oxygen Sensor voltage is 0.70 V or more	Multiply 0.3906	%	Between 20 and 100%
Time $85	Maximum Rich (≤0.45 V) time	Multiply 0.2621	Second	Between 20 and 66.8 seconds

If all the values (Time $81, Time $84 and Time $85) are out of the standard values, the ECM interprets this as a malfunction.

O2S Failure Threshold Charts (Continued)

CHART 9:

Rear O2S (Bank 1 Sensor 1 and Bank 2 Sensor 1) Voltage Monitor

Related DTCs: P0130, P0150, P2195, P2196, P2197 and P2198

TEST ID	DESCRIPTION OF TEST DATA	CONVERSION FACTOR	UNIT	STANDARD VALUE OF TEST LIMIT
Time $07	The minimum voltage during O2S monitoring	N/A	V	Between 0 and 0.4 V
Time $08	The maximum voltage during O2S monitoring	N/A	V	Between 0.55 and 1.275 V

If the sensor voltage is out of the standard value, the ECM interprets this as a malfunction.

Front O2S (Bank 1 Sensor 1 and Bank 2 Sensor 1) Response Monitor

Related DTCs: P0133 and P0153

TEST ID	DESCRIPTION OF TEST DATA	CONVERSION FACTOR	UNIT	STANDARD VALUE OF TEST LIMIT
Time $31	Time to change from Lean (≤0.4 V) to Rich (≥0.55 V)	N/A	Second	Between 0 and 1 second
Time $32	Time to change from Rich (≥0.55 V) to Lean (≤0.4 V)	N/A	Second	Between 0 and 1 second

If the time required to change is out of the standard value, the ECM interprets this as a malfunction.

Front O2S (Bank 1 Sensor 1 and Bank 2 Sensor 1) Frequency Monitor During Engine Idling

Related DTCs: P0133 and P0153

TEST ID	DESCRIPTION OF TEST DATA	CONVERSION FACTOR	UNIT	STANDARD VALUE OF TEST LIMIT
Time $33	Average Lean (≤0.4 V) time of one waveform cycle	N/A	Second	**Bank 1:** Between 0 and 3.45 seconds **Bank 2:** Between 0 and 3.7 seconds
Time $34	Average Rich (≥0.55 V) time of one waveform cycle	N/A	Second	**Bank 1:** Between 0 and 3.45 seconds **Bank 2:** Between 0 and 3.7 seconds

If the sum of Time $33 and Time $34 is out of the standard value, the ECM interprets this as a malfunction.

O2S Failure Threshold Charts (Continued)

CHART 9 (Continued):

Front O2S (Bank 1 Sensor 1 and Bank 2 Sensor 1) Frequency Monitor During Vehicle Running

Related DTCs: P0133 and P0153

TEST ID	DESCRIPTION OF TEST DATA	CONVERSION FACTOR	UNIT	STANDARD VALUE OF TEST LIMIT
Time $35	Average Lean (≤0.4 V) time of one waveform cycle	N/A	Second	**Bank 1:** Between 0 and 0.73 seconds **Bank 2:** Between 0 and 0.75 seconds (varies depending on feedback compensation factor)
Time $36	Average Rich (≥0.55 V) time of one waveform cycle	N/A	Second	**Bank 1:** Between 0 and 0.73 seconds **Bank 2:** Between 0 and 0.75 seconds (varies depending on feedback compensation factor)

If the sum of Time $35 and Time $36 is out of the standard value, the ECM interprets this as a malfunction.

Rear O2S (Bank 1 Sensor 2 and Bank 2 Sensor 2) Voltage Monitor

Related DTCs: P0136 and P0156

TEST ID	DESCRIPTION OF TEST DATA	CONVERSION FACTOR	UNIT	STANDARD VALUE OF TEST LIMIT
Time $07	The minimum voltage during O2S monitoring	N/A	V	Between 0 and 0.4 V
Time $08	The maximum voltage during O2S monitoring	N/A	V	Between 0.5 and 1.275 V

If the sensor voltage is out of the standard value, the ECM interprets this as a malfunction.

Rear O2S (Bank 1 Sensor 2 and Bank 2 Sensor 2) Element Monitor

Related DTCs: P0136 and P0156

TEST ID	DESCRIPTION OF TEST DATA	CONVERSION FACTOR	UNIT	STANDARD VALUE OF TEST LIMIT
Time $81	Percentage of monitoring time where Oxygen Sensor voltage is less than 0.05 V	Multiply 0.3906	%	Between 0 and 90%
Time $84	Percentage of monitoring time where Oxygen Sensor voltage is 0.70 V or more	Multiply 0.3906	%	Between 20 and 100%
Time $85	Maximum Rich (≤0.45 V) time	Multiply 0.2621	Second	Between 20 and 66.8 seconds

If all the values (Time $81, Time $84 and Time $85) are out of the standard values, the ECM interprets this as a malfunction.

O2S Failure Threshold Charts (Continued)

CHART 10:

Front O2S (Bank 1 Sensor 1 and Bank 2 Sensor 1) Voltage Monitor

Related DTCs: P0130, P0150, P2195, P2196, P2197 and P2198

TEST ID	DESCRIPTION OF TEST DATA	CONVERSION FACTOR	UNIT	STANDARD VALUE OF TEST LIMIT
Time $07	The minimum voltage during O2S monitoring	N/A	V	Between 0 and 0.4 V
Time $08	The maximum voltage during O2S monitoring	N/A	V	Between 0.55 and 1.275 V

If the sensor voltage is out of the standard value, the ECM interprets this as a malfunction.

Front O2S (Bank 1 Sensor 1 and Bank 2 Sensor 1) Response Monitor

Related DTCs: P0133 and P0153

TEST ID	DESCRIPTION OF TEST DATA	CONVERSION FACTOR	UNIT	STANDARD VALUE OF TEST LIMIT
Time $31	Time to change from Lean (≤0.4 V) to Rich (≥0.55 V)	N/A	Second	Between 0 and 0.9 seconds
Time $32	Time to change from Rich (≥0.55 V) to Lean (≤0.4 V)	N/A	Second	Between 0 and 0.9 seconds

If the time required to change is out of the standard value, the ECM interprets this as a malfunction.

Front O2S (Bank 1 Sensor 1 and Bank 2 Sensor 1) Frequency Monitor During Engine Idling

Related DTCs: P0133 and P0153

TEST ID	DESCRIPTION OF TEST DATA	CONVERSION FACTOR	UNIT	STANDARD VALUE OF TEST LIMIT
Time $33	Average Lean (≤0.4 V) time of one waveform cycle	N/A	Second	Between 0 and 3 seconds
Time $34	Average Rich (≥0.55 V) time of one waveform cycle	N/A	Second	Between 0 and 3 seconds

If the sum of Time $33 and Time $34 is out of the standard value, the ECM interprets this as a malfunction.

O2S Failure Threshold Charts (Continued)

CHART 10 (Continued):

Front O2S (Bank 1 Sensor 1 and Bank 2 Sensor 1) Frequency Monitor During Engine Idling

Related DTCs: P0133 and P0153

TEST ID	DESCRIPTION OF TEST DATA	CONVERSION FACTOR	UNIT	STANDARD VALUE OF TEST LIMIT
Time $35	Average Lean (≤0.4 V) time of one waveform cycle	N/A	Second	Between 0 and 0.75 seconds (varies depending on feedback compensation factor)
Time $36	Average Rich (≥0.55 V) time of one waveform cycle	N/A	Second	Between 0 and 0.75 seconds (varies depending on feedback compensation factor)

If the sum of Time $35 and Time $36 is out of the standard value, the ECM interprets this as a malfunction.

Rear O2S (Bank 1 Sensor 2 and Bank 2 Sensor 2) Voltage Monitor

Related DTCs: P0136 and P0156

TEST ID	DESCRIPTION OF TEST DATA	CONVERSION FACTOR	UNIT	STANDARD VALUE OF TEST LIMIT
Time $07	The minimum voltage during O2S monitoring	N/A	V	Between 0 and 0.4 V
Time $08	The maximum voltage during O2S monitoring	N/A	V	Between 0.5 and 1.275 V

If the sensor voltage is out of the standard value, the ECM interprets this as a malfunction.

Rear O2S (Bank 1 Sensor 2 and Bank 2 Sensor 2) Element Monitor

Related DTCs: P0136 and P0156

TEST ID	DESCRIPTION OF TEST DATA	CONVERSION FACTOR	UNIT	STANDARD VALUE OF TEST LIMIT
Time $81	Percentage of monitoring time where Oxygen Sensor voltage is less than 0.05 V	Multiply 0.3906	%	Between 0 and 60%
Time $84	Percentage of monitoring time where Oxygen Sensor voltage is 0.70 V or more	Multiply 0.3906	%	Between 20 and 100%
Time $85	Maximum Rich (≤0.45 V) time	Multiply 0.2621	Second	Between 20 and 66.8 seconds

If all the values (Time $81, Time $84 and Time $85) are out of the standard values, the ECM interprets this as a malfunction.

O2S Failure Threshold Charts (Continued)

CHART 11:

Front O2S (Bank 1 Sensor 1 and Bank 2 Sensor 1) Voltage Monitor

Related DTCs: P0130, P0150, P2195, P2196, P2197 and P2198

TEST ID	DESCRIPTION OF TEST DATA	CONVERSION FACTOR	UNIT	STANDARD VALUE OF TEST LIMIT
Time $07	The minimum voltage during O2S monitoring	N/A	V	Between 0 and 0.4 V
Time $08	The maximum voltage during O2S monitoring	N/A	V	Between 0.55 and 1.275 V

If the sensor voltage is out of the standard value, the ECM interprets this as a malfunction.

Front O2S (Bank 1 Sensor 1 and Bank 2 Sensor 1) Response Monitor

Related DTCs: P0133 and P0153

TEST ID	DESCRIPTION OF TEST DATA	CONVERSION FACTOR	UNIT	STANDARD VALUE OF TEST LIMIT
Time $31	Time to change from Lean (≤0.4 V) to Rich (≥0.55 V)	N/A	Second	Between 0 and 0.9 seconds
Time $32	Time to change from Rich (≥0.55 V) to Lean (≤0.4 V)	N/A	Second	Between 0 and 0.9 seconds

If the time required to change is out of the standard value, the ECM interprets this as a malfunction.

Front O2S (Bank 1 Sensor 1 and Bank 2 Sensor 1) Frequency Monitor During Engine Idling

Related DTCs: P0133 and P0153

TEST ID	DESCRIPTION OF TEST DATA	CONVERSION FACTOR	UNIT	STANDARD VALUE OF TEST LIMIT
Time $33	Average Lean (≤0.4 V) time of one waveform cycle	N/A	Second	Between 0 and 2.8 seconds
Time $34	Average Rich (≥0.55 V) time of one waveform cycle	N/A	Second	Between 0 and 2.8 seconds

If the sum of Time $33 and Time $34 is out of the standard value, the ECM interprets this as a malfunction.

O2S Failure Threshold Charts (Continued)

CHART 11 (Continued):

Front O2S (Bank 1 Sensor 1 and Bank 2 Sensor 1) Frequency Monitor During Vehicle Running

Related DTCs: P0133 and P0153

TEST ID	DESCRIPTION OF TEST DATA	CONVERSION FACTOR	UNIT	STANDARD VALUE OF TEST LIMIT
Time $35	Average Lean (≤0.4 V) time of one waveform cycle	N/A	Second	Between 0 and 0.75 seconds (varies depending on feedback compensation factor)
Time $36	Average Rich (≥0.55 V) time of one waveform cycle	N/A	Second	Between 0 and 0.75 seconds (varies depending on feedback compensation factor)

If the sum of Time $35 and Time $36 is out of the standard value, the ECM interprets this as a malfunction.

Rear O2S (Bank 1 Sensor 2 and Bank 2 Sensor 2) Voltage Monitor

Related DTCs: P0136 and P0156

TEST ID	DESCRIPTION OF TEST DATA	CONVERSION FACTOR	UNIT	STANDARD VALUE OF TEST LIMIT
Time $07	The minimum voltage during O2S monitoring	N/A	V	Between 0 and 0.4 V
Time $08	The maximum voltage during O2S monitoring	N/A	V	Between 0.5 and 1.275 V

If the sensor voltage is out of the standard value, the ECM interprets this as a malfunction.

Rear O2S (Bank 1 Sensor 2 and Bank 2 Sensor 2) Element Monitor

Related DTCs: P0136 and P0156

TEST ID	DESCRIPTION OF TEST DATA	CONVERSION FACTOR	UNIT	STANDARD VALUE OF TEST LIMIT
Time $81	Percentage of monitoring time where Oxygen Sensor voltage is less than 0.05 V	Multiply 0.3906	%	Between 0 and 60%
Time $84	Percentage of monitoring time where Oxygen Sensor voltage is 0.70 V or more	Multiply 0.3906	%	Between 20 and 100%
Time $85	Maximum Rich (≤0.45 V) time	Multiply 0.2621	Second	Between 20 and 66.8 seconds

If all the values (Time $81, Time $84 and Time $85) are out of the standard values, the ECM interprets this as a malfunction.

O2S Failure Threshold Charts (Continued)

CHART 12:

Front O2S (Bank 1 Sensor 1 and Bank 2 Sensor 1) Voltage Monitor

Related DTCs: P0130, P0150, P2195, P2196, P2197 and P2198

TEST ID	DESCRIPTION OF TEST DATA	CONVERSION FACTOR	UNIT	STANDARD VALUE OF TEST LIMIT
Time $07	The minimum voltage during O2S monitoring	N/A	V	Between 0 and 0.4 V
Time $08	The maximum voltage during O2S monitoring	N/A	V	Between 0.55 and 1.275 V

If the sensor voltage is out of the standard value, the ECM interprets this as a malfunction.

Front O2S (Bank 1 Sensor 1 and Bank 2 Sensor 1) Response Monitor

Related DTCs: P0133 and P0153

TEST ID	DESCRIPTION OF TEST DATA	CONVERSION FACTOR	UNIT	STANDARD VALUE OF TEST LIMIT
Time $31	Time to change from Lean (≤0.4 V) to Rich (≥0.55 V)	N/A	Second	Between 0 and 0.9 seconds
Time $32	Time to change from Rich (≥0.55 V) to Lean (≤0.4 V)	N/A	Second	Between 0 and 0.9 seconds

If the time required to change is out of the standard value, the ECM interprets this as a malfunction.

Front O2S (Bank 1 Sensor 1 and Bank 2 Sensor 1) Frequency Monitor During Engine Idling

Related DTCs: P0133 and P0153

TEST ID	DESCRIPTION OF TEST DATA	CONVERSION FACTOR	UNIT	STANDARD VALUE OF TEST LIMIT
Time $33	Average Lean (≤0.4 V) time of one waveform cycle	N/A	Second	Between 0 and 2.8 seconds
Time $34	Average Rich (≥0.55 V) time of one waveform cycle	N/A	Second	Between 0 and 2.8 seconds

If the sum of Time $33 and Time $34 is out of the standard value, the ECM interprets this as a malfunction.

O2S Failure Threshold Charts (Continued)

CHART 12 (Continued):

Front O2S (Bank 1 Sensor 1 and Bank 2 Sensor 1) Frequency Monitor During Vehicle Running

Related DTCs: P0133 and P0153

TEST ID	DESCRIPTION OF TEST DATA	CONVERSION FACTOR	UNIT	STANDARD VALUE OF TEST LIMIT
Time $35	Average Lean (≤0.4 V) time of one waveform cycle	N/A	Second	Between 0 and 0.75 seconds (varies depending on feedback compensation factor)
Time $36	Average Rich (≥0.55 V) time of one waveform cycle	N/A	Second	Between 0 and 0.75 seconds (varies depending on feedback compensation factor)

If the sum of Time $35 and Time $36 is out of the standard value, the ECM interprets this as a malfunction.

Rear O2S (Bank 1 Sensor 2 and Bank 2 Sensor 2) Voltage Monitor

Related DTCs: P0136 and P0156

TEST ID	DESCRIPTION OF TEST DATA	CONVERSION FACTOR	UNIT	STANDARD VALUE OF TEST LIMIT
Time $07	The minimum voltage during O2S monitoring	N/A	V	Between 0 and 0.4 V
Time $08	The maximum voltage during O2S monitoring	N/A	V	Between 0.5 and 1.275 V

If the sensor voltage is out of the standard value, the ECM interprets this as a malfunction.

Rear O2S (Bank 1 Sensor 2 and Bank 2 Sensor 2) Element Monitor

Related DTCs: P0136 and P0156

TEST ID	DESCRIPTION OF TEST DATA	CONVERSION FACTOR	UNIT	STANDARD VALUE OF TEST LIMIT
Time $81	Percentage of monitoring time where Oxygen Sensor voltage is less than 0.5 V	Multiply 0.3906	%	Between 0 and 90%
Time $84	Percentage of monitoring time where Oxygen Sensor voltage is 0.70 V or more	Multiply 0.3906	%	Between 20 and 100%
Time $85	Maximum Rich (≥0.45 V) time	Multiply 0.2621	Second	Between 20 and 66.8 seconds

If all the values (Time $81, Time $84 and Time $85) are out of the standard values, the ECM interprets this as a malfunction.

O2S Failure Threshold Charts (Continued)

CHART 13:

Rear O2S (Bank 1 Sensor 2 and Bank 2 Sensor 2) Voltage Monitor

Related DTCs: P0136 and P0156

TEST ID	DESCRIPTION OF TEST DATA	CONVERSION FACTOR	UNIT	STANDARD VALUE OF TEST LIMIT
Time $07	The minimum voltage during O2S monitoring	N/A	V	Between 0 and 0.4 V
Time $08	The maximum voltage during O2S monitoring	N/A	V	Between 0.6 and 1.275 V

If the sensor voltage is out of the standard value, the ECM interprets this as a malfunction.

Rear O2S (Bank 1 Sensor 2 and Bank 2 Sensor 2) Element Monitor

Related DTCs: P0136 and P0156

TEST ID	DESCRIPTION OF TEST DATA	CONVERSION FACTOR	UNIT	STANDARD VALUE OF TEST LIMIT
Time $81	Percentage of monitoring time where Oxygen Sensor voltage is less than 0.5 V	Multiply 0.3906	%	Between 0 and 60%
Time $84	Percentage of monitoring time where Oxygen Sensor voltage is 0.70 V or more	Multiply 0.3906	%	Between 20 and 100%
Time $85	Maximum Rich (≥0.45 V) time	Multiply 0.2621	Second	Between 20 and 66.8 seconds

If all the values (Time $81, Time $84 and Time $85) are out of the standard values, the ECM interprets this as a malfunction.

O2S Failure Threshold Charts (Continued)

CHART 14:

Rear O2S (Bank 1 Sensor 2 and Bank 2 Sensor 2) Voltage Monitor

Related DTCs: P0136 and P0156

TEST ID	DESCRIPTION OF TEST DATA	CONVERSION FACTOR	UNIT	STANDARD VALUE OF TEST LIMIT
Time $07	The minimum voltage during O2S monitoring	N/A	V	Between 0 and 0.45 V
Time $08	The maximum voltage during O2S monitoring	N/A	V	Between 0.5 and 1.275 V

If the sensor voltage is out of the standard value, the ECM interprets this as a malfunction.

Rear O2S (Bank 1 Sensor 2 and Bank 2 Sensor 2) Element Monitor

Related DTCs: P0136 and P0156

TEST ID	DESCRIPTION OF TEST DATA	CONVERSION FACTOR	UNIT	STANDARD VALUE OF TEST LIMIT
Time $81	Percentage of monitoring time where Oxygen Sensor voltage is less than 0.5 V	Multiply 0.3906	%	Between 0 and 80%
Time $84	Percentage of monitoring time where Oxygen Sensor voltage is 0.70 V or more	Multiply 0.3906	%	Between 20 and 100%
Time $85	Maximum Rich (≥0.45 V) time	Multiply 0.2621	Second	Between 20 and 66.8 seconds

If all the values (Time $81, Time $84 and Time $85) are out of the standard values, the ECM interprets this as a malfunction.

LEXUS

Technical Service Information Bulletin

December 16, 2004

TSIB

Title:

SENSOR INSPECTION FOR AIR CONDITIONING SYSTEM

Models:

'90 – Current All Models

Introduction

This service bulletin contains inspection procedures to more precisely confirm proper operation of the following temperature sensors of the air conditioning system. Follow the procedures in this service bulletin when inspecting these sensors. These contents will be reflected in future repair manuals.

- Room Temperature Sensor
- Ambient Temperature Sensor
- Air Duct Sensor
- Evaporator Temperature Sensor
- Solar Sensor
- Room Humidity Sensor

Applicable Vehicles

- **All 1990 – Current** model year **Lexus** vehicles.

Warranty Information

OP CODE	DESCRIPTION	TIME	OFP	T1	T2
N/A	Not Applicable to Warranty	–	–	–	–

Inspection Procedure

1. Inspect Room Temperature Sensor.

A. Measure the sensor resistance.

Resistance Value at 77°F (25°C)	1700 +/– 85Ω

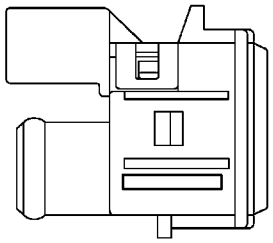

NOTE:

- **Even slightly touching the sensor may change the resistance value. Be sure to hold the connector of the sensor.**
- **When measuring, the sensor temperature must be the same as the ambient temperature.**

HINT:

As the temperature increases, the resistance decreases.

TEMPERATURE °F (°C)	SPECIFICATION kΩ
50 (10)	3.00 to 3.73
59 (15)	2.45 to 2.88
68 (20)	1.95 to 2.30
77 (25)	1.60 to 1.80
86 (30)	1.28 to 1.47
95 (35)	1.00 to 1.22
104 (40)	0.80 to 1.00
113 (45)	0.65 to 0.85
122 (50)	0.50 to 0.70
131 (55)	0.44 to 0.60
140 (60)	0.36 to 0.50

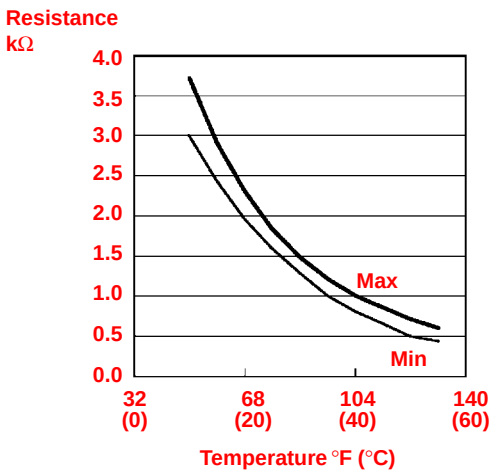

Inspection Procedure (Continued)

2. Inspect Ambient Temperature Sensor.

A. Measure the sensor resistance according to the selected graph (specification).

Resistance Value at 77°F (25°C)	1700 +/– 85Ω

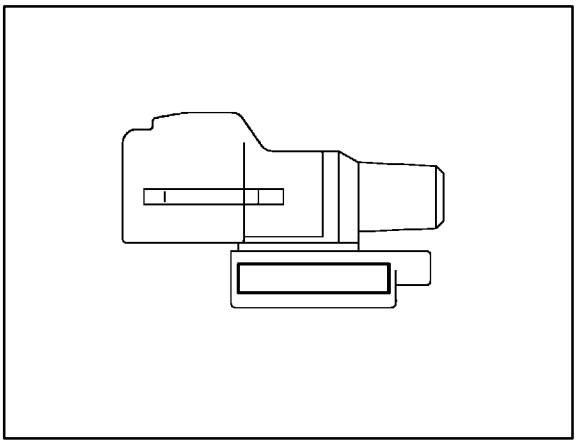

NOTE:

- **Even slightly touching the sensor may change the resistance value. Be sure to hold the connector of the sensor.**
- **When measuring, the sensor temperature must be the same as the ambient temperature.**

HINT:

As the temperature increases, the resistance decreases.

TEMPERATURE °F (°C)	SPECIFICATION kΩ
50 (10)	3.00 to 3.73
59 (15)	2.45 to 2.88
68 (20)	1.95 to 2.30
77 (25)	1.60 to 1.80
86 (30)	1.28 to 1.47
95 (35)	1.00 to 1.22
104 (40)	0.80 to 1.00
113 (45)	0.65 to 0.85
122 (50)	0.50 to 0.70
131 (55)	0.44 to 0.60
140 (60)	0.36 to 0.50

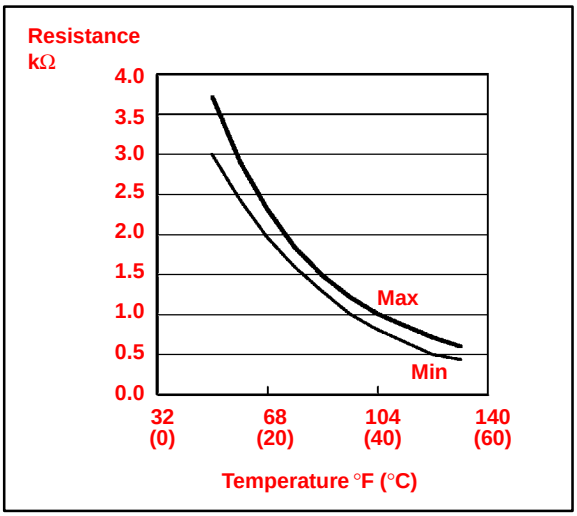

Inspection Procedure (Continued)

3. Inspect Air Duct Sensor.

A. Measure the sensor resistance according to the table and graph (specification).

NOTE:

- **Even slightly touching the sensor may change the resistance value. Be sure to hold the connector of the sensor.**
- **When measuring, the sensor temperature must be the same as the ambient temperature.**

HINT:

As the temperature increases, the resistance decreases.

TEMPERATURE °F (°C)	SPECIFICATION kΩ
50 (10)	9.48 to 10.49
59 (15)	7.50 to 8.28
68 (20)	5.95 to 6.57
77 (25)	4.77 to 5.25
86 (30)	3.85 to 4.21
95 (35)	3.12 to 3.40
104 (40)	2.53 to 2.79
113 (45)	2.06 to 2.30
122 (50)	1.69 to 1.91
131 (55)	1.39 to 1.59
140 (60)	1.15 to 1.33

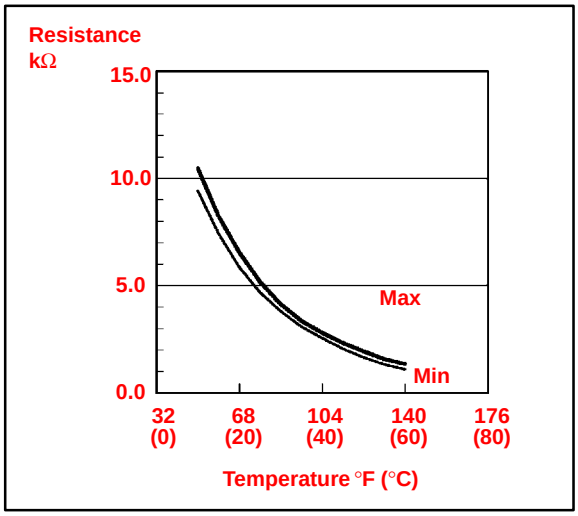

Inspection Procedure (Continued)

4. Inspect Evaporator Temperature Sensor.

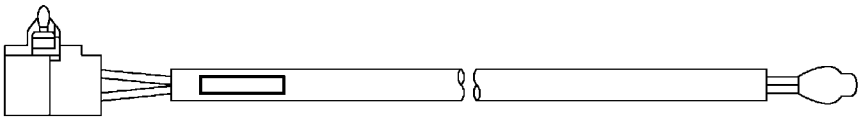

Select the appropriate graph (specification) using the following table.

NOTE:
Please inspect the sensors for model years not indicated by this bulletin, according to the instructions in the applicable repair manual.

MODEL	MODEL YEAR	COMMENTS	PART NUMBER	GRAPH
ES 300	1992 – 2001		88625–33070	2
ES 300/330	2002 – 2003		88625–17130	2
	2003		88625–33170	3
GS 300	1993 – 1997		88625–3A020	2
GS 300/400/430	1998 – 2002		88625–3A120	2
GX 470	2003 – 2005	Thermistor No. 1	88625–35050	3
		Thermistor No. 2	88625–16210	2
IS 300	2000 – 2001		88625–48010	2
LS 400	1990 – 1992		88625–32040	2
	1993 – 1994		88625–50100	2
	1995 – 2000		88625–50140	2
LS 430	2001 – 2005		88625–50160	2
LX 450	1996 – 1997		88625–60060	2
LX 470	1998 – 2000	Thermistor No. 2	88625–60140	2
	1998 – 2002	Thermistor No. 1	88625–60130	2
	2003 – 2005		88625–47011	2
RX 300	1998 – 2003		88625–48010	2
RX 330	2004	CBU	88625–48050	1
	2004 – 2005	CBU	88625–48060	3
		NAP		
SC 300/400	1991 – 2000		88625–32040	2

Inspection Procedure (Continued)

A. Measure the sensor resistance according to the selected graph (specification).

NOTE:

- **Even slightly touching the sensor may change the resistance value. Be sure to hold the connector of the sensor.**
- **When measuring, the sensor temperature must be the same as the ambient temperature.**

HINT:

As the temperature increases, the resistance decreases.

Graph 1:

TEMPERATURE °F (°C)	SPECIFICATION kΩ
14 (–10)	7.30 to 9.10
23 (–5)	5.65 to 6.95
32 (0)	4.40 to 5.35
41 (5)	3.40 to 4.15
50 (10)	2.70 to 3.25
59 (15)	2.14 to 2.58
68 (20)	1.71 to 2.05
77 (25)	1.38 to 1.64
86 (30)	1.11 to 1.32

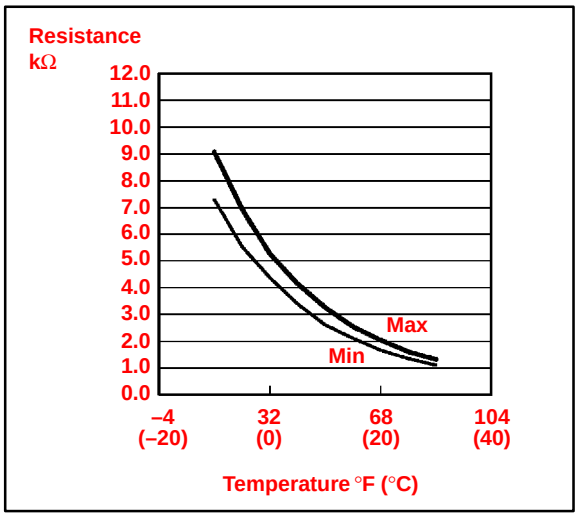

Graph 2:

TEMPERATURE °F (°C)	SPECIFICATION kΩ
14 (–10)	7.40 to 9.20
23 (–5)	5.65 to 7.00
32 (0)	4.35 to 5.40
41 (5)	3.40 to 4.20
50 (10)	2.68 to 3.30
59 (15)	2.10 to 2.60
68 (20)	1.66 to 2.10
77 (25)	1.32 to 1.66
86 (30)	1.05 to 1.35

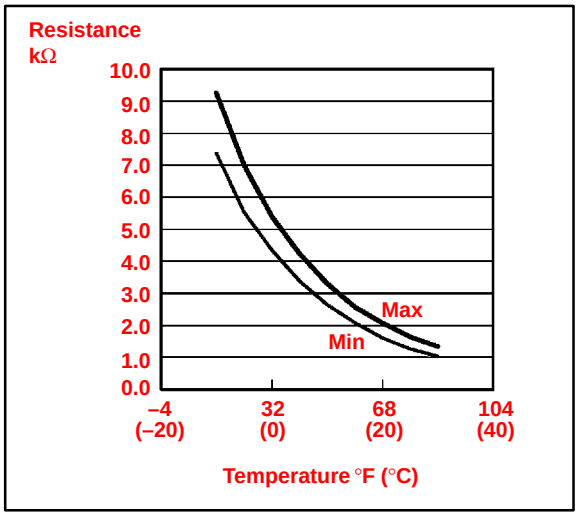

Inspection Procedure (Continued)

Graph 3:

TEMPERATURE °F (°C)	SPECIFICATION kΩ
14 (–10)	8.00 to 10.00
23 (–5)	6.15 to 7.65
32 (0)	4.75 to 5.85
41 (5)	3.70 to 4.55
50 (10)	2.91 to 3.55
59 (15)	2.32 to 2.80
68 (20)	1.85 to 2.22
77 (25)	1.48 to 1.77
86 (30)	1.20 to 1.43

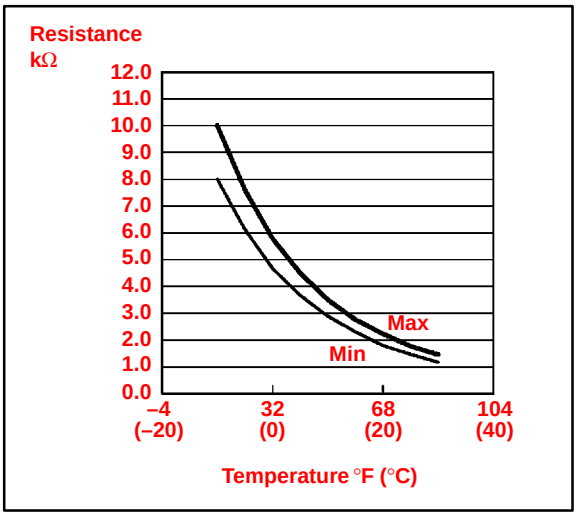

Inspection Procedure (Continued)

5. Inspect Solar Sensor.

Four types of solar sensors are used on Lexus vehicles depending on the vehicle specifications. The inspection procedure for each type of sensor differs from the others. Select the appropriate inspection procedure from the table below according to vehicle specifications and perform the inspection.

EQUIPPED WITH AUTOMATIC LIGHT CONTROL SYSTEM	A/C SYSTEM WITH RIGHT/LEFT INDEPENDENT TEMPERATURE CONTROL	INSPECTION PROCEDURE
No	No	A
No	Yes	B
Yes	Yes	C
Yes	No	D

Procedure A:

a. Disconnect the solar sensor connector.

b. Measure the resistance between terminals 1 and 2 of the solar sensor under the following conditions:

- Cover the sensor with a cloth to avoid direct light.
- Expose the sensor to light from a distance of 300 mm (11.81 in.) or less with an inspection light.

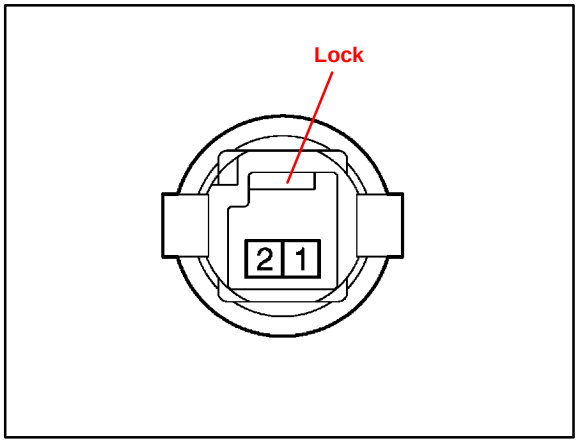

NOTE:

- **Terminal 1 of the sensor is always on the right, when the lock is facing up.**
- **When using an analog tester, connect the positive (+) lead to terminal 2 and negative (–) lead to terminal 1 of the solar sensor.**

HINT:

If the light is weak, the sensor may not react. Be sure to use an incandescent light for an inspection light.

Standard:

CONDITION	SPECIFICATION
When the sensor is covered with a cloth (to avoid direct light)	Infinite ohms
When the sensor is exposed to light	Less than infinite resistance

Inspection Procedure (Continued)

Procedure B:

a. Disconnect the solar sensor connector.

b. Measure the resistance between terminals 2 and 3 of the solar sensor under the following conditions:

- Cover the sensor with a cloth to avoid direct light.
- Expose the sensor to light from a distance of 300 mm (11.81 in.) or less with an inspection light.

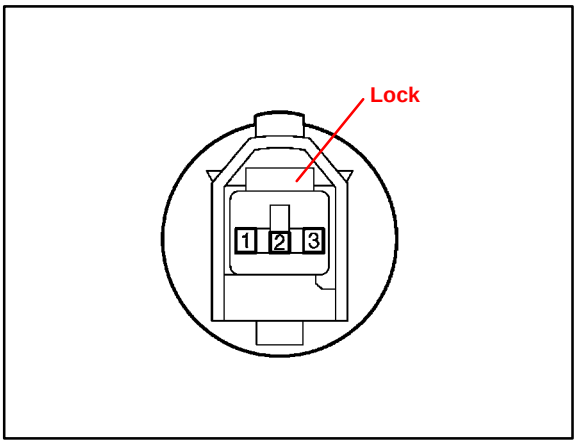

NOTE:

When using an analog tester, connect the positive (+) lead to terminal 3 and negative (–) lead to terminal 2 of the solar sensor.

HINT:

If the light is weak, the sensor may not react. Be sure to use an incandescent light for an inspection light.

Standard:

CONDITION	SPECIFICATION
When the sensor is covered with a cloth (to avoid direct light)	Infinite ohms
When the sensor is exposed to light	Less than infinite resistance

Inspection Procedure (Continued)

Procedure C:

a. Turn the ignition switch ON.

b. Measure the voltage between terminals TSR (+) and CLTE (–) of the connector under the following conditions:

- Cover the sensor with a cloth to avoid direct light.
- Expose the sensor to light from a distance of 300 mm (11.81 in.) or less with an inspection light.

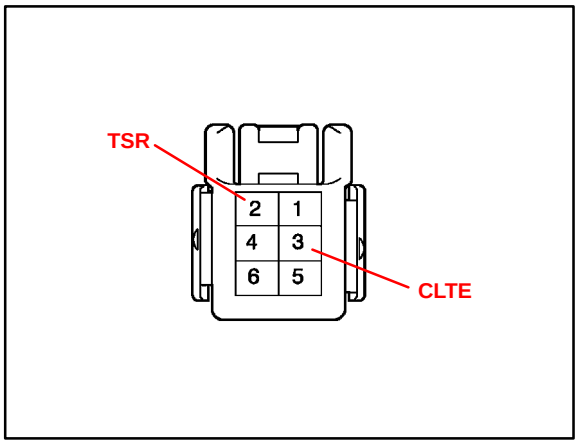

HINT:
- **If the light is weak, the sensor may not react. Be sure to use an incandescent light for an inspection light.**
- **Do not disconnect the solar sensor connector.**

Standard:

CONDITION	SPECIFICATION
When the sensor is covered with a cloth (to avoid direct light)	Below 0.8 V
When the sensor is exposed to light	4.3 +/– 0.3 V

c. Measure the voltage between terminals TSL (+) and CLTE (–) of the connector under the following conditions:

- Cover the sensor with a cloth to avoid direct light.
- Expose the sensor to light from a distance of 300 mm (11.81 in.) or less with an inspection light.

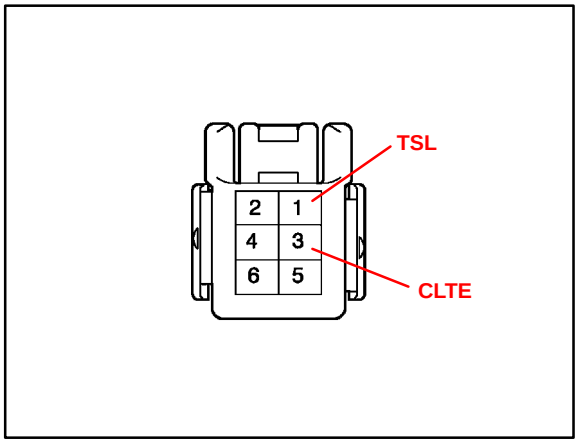

HINT:
- **If the light is weak, the sensor may not react. Be sure to use an incandescent light for an inspection light.**
- **Do not disconnect the solar sensor connector.**

Standard:

CONDITION	SPECIFICATION
When the sensor is covered with a cloth (to avoid direct light)	Below 0.8 V
When the sensor is exposed to light	4.3 +/– 0.3 V

Inspection Procedure (Continued)

Procedure D:

a. Turn the ignition switch ON.

b. Using the tester, measure the voltage between terminals TSD (+) and CLTE (–) of the connector under the following conditions:

- Cover the sensor with a cloth to avoid direct light.
- Expose the sensor to light from a distance of 300 mm (11.81 in.) or less with an inspection light.

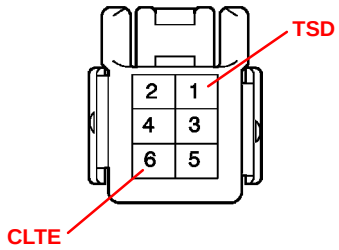

HINT:

- **If the light is weak, the sensor may not react. Be sure to use an incandescent light for an inspection light.**
- **Do not disconnect the solar sensor connector.**

Standard:

CONDITION	SPECIFICATION
When the sensor is covered with a cloth (to avoid direct light)	Below 0.8 V
When the sensor is exposed to light	4.3 +/– 0.3 V

Inspection Procedure (Continued)

6. Inspect Room Humidity Sensor.

Measure the humidity and output voltage of the humidity sensor when the sensor is installed on the vehicle and the temperature at the humidity sensor position (room temperature sensor position) is 77°F (25°C).
If the output voltage is within the specifications according to the graph and table below, the sensor is normal.

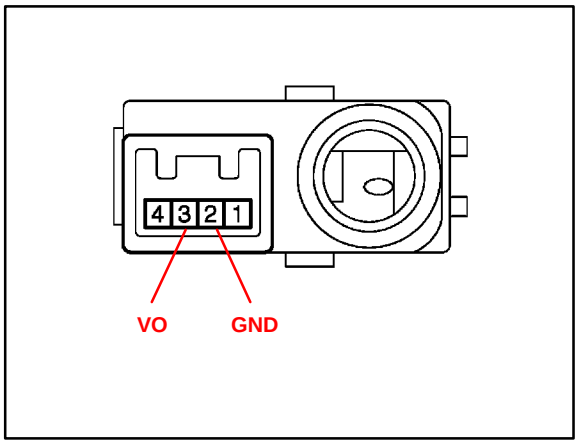

HINT:
For the inspection procedure of the room temperature sensor, refer to "Room Temperature Sensor Inspection Procedure" in this bulletin.

A. Turn the ignition switch to the ON position.

B. Measure the voltage between terminal VO (3) and GND (2) of the room humidity sensor.

C. Measure the humidity and voltage when the room temperature (humidity sensor position) is 77°F (25°C). According to the result, determine whether the sensor is normal or not.

HUMIDITY (% RH)	OUTPUT VOLTAGE AT 77°F (25°C)
10	0.70 to 1.08 V
20	0.72 to 1.57 V
30	1.13 to 1.95 V
40	1.61 to 2.24 V
50	1.99 to 2.46 V
60	2.26 to 2.66 V
70	2.48 to 2.85 V
80	2.68 to 3.04 V
90	2.87 to 3.05 V

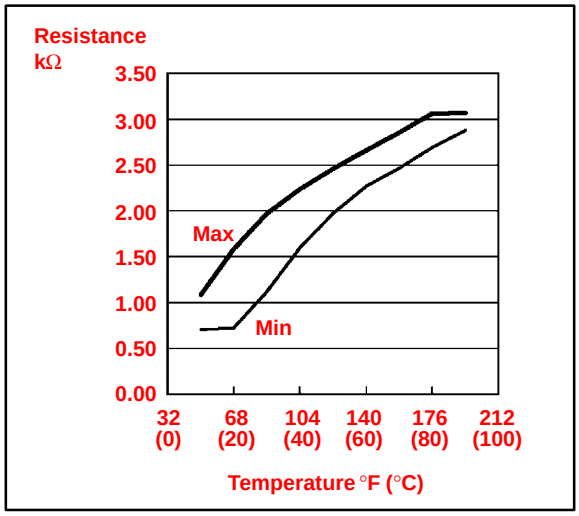

LEXUS

Technical Service Information Bulletin

January 12, 2005

TSIB

Title:

IRON PARTICLE RUST CONTAMINATION REPAIR

Models:

'94 – Current

Introduction

The purpose of this bulletin is to provide information regarding the proper procedures to clean vehicles that may have been subjected to contamination by airborne iron particles such as rail dust.

Applicable Vehicles

- **1994 – Current** model year **Lexus** vehicles.

Required Tools & Materials

TOOLS & MATERIALS	QUANTITY
Auto Magic® Special Cleaner Concentrate™ #713*	1
Rubber Gloves, Aprons, Boots	As Needed
Eye Protection	
Sponges or Wash Mitts	
Pail or Bucket	

* Contact the main office of Auto Wax Company Inc. (1–800–826–0828 or www.automagic.biz) to find a local source for Auto Magic® Special Cleaner Concentrate.™

Condition

During rail transportation or extended storage near industrial areas, vehicles may occasionally be subjected to contamination by airborne iron particles shed from railroad tracks, train wheels, exposure to heavy machinery facilities, grinding, welding, etc.

Inspection

This type of contamination can be identified by the presence of small red or brown particles on the paint surface. These particles are often difficult to see on dark color paints, but can be easily felt when brushing a hand across horizontal body surfaces such as hood, roof, or deck lid.

CAUTION:

Because of the abrasiveness of these small iron particles, polishing or buffing procedures should not be attempted to repair the paint surface of an affected vehicle. This will result in further paint damage and detract from vehicle appearance.

Repair

Washing the affected paint surfaces with Auto Magic® Special Cleaner Concentrate™ is the recommended method to dislodge embedded iron particles and remove the surrounding rust stains. The correct usage of Auto Magic® Special Cleaner Concentrate™ is described in this bulletin.

Warranty Information

OP CODE	DESCRIPTION	TIME	OFP	T1	T2
N/A	Not Applicable to Warranty	–	–	–	–

General Precautions

WARNING:

Auto Magic® Special Cleaner Concentrate™ is a corrosive material. Appropriate personal protection equipment must be worn to protect persons performing the contamination removal procedure. Please refer to the precautions on the product prior to use.

CAUTION:

Consult local or state regulations regarding the handling, use, and disposal of Auto Magic® Special Cleaner Concentrate™ prior to use.

Under no circumstances should contamination removal be performed in direct sunlight or contamination removal solution be allowed to dry on vehicle surfaces, as staining of plastic, rubber, or painted parts may result.

Repair Procedure

1. Move vehicle out of direct sunlight. Initially rinse with cool water then wash with liquid car wash detergent. Rinse again thoroughly with fresh water.

2. Dilute the mixture to a 1:8 ratio for painted surfaces. Use the recommended dilution ratio when applying to any other surface. Apply the diluted cleaner concentrate so that it evenly covers the affected area. Use an appropriate mitt or sponge to agitate the surface.

3. Thoroughly rinse vehicle with fresh water.

4. Inspect vehicle carefully both visually and by feel to determine if all iron particles have been removed. Repeat the wash several times if necessary to achieve complete removal.

5. Dry vehicle with a soft terry cloth towel and apply a non–abrasive, non–silicone glaze to obtain a high–gloss finish.

LEXUS

Technical Service Information Bulletin

March 28, 2005

Title:

RADIATOR CAP INSPECTION

Models:

All Models

ENGINE

EG007-05

Introduction

The procedure for inspecting the radiator cap has been revised. Please refer to the following procedures when inspecting the radiator cap on all Lexus models.

Applicable Vehicles

- **All Lexus models.**

Required Equipment

MANUFACTURER	EQUIPMENT	QTY
Snap–On/Sun SVTS262A (or equivalent)	Cooling System Tester (Radiator Cap Tester) 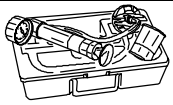	1

NOTE:
Additional Lexus Approved Dealer Equipment may be ordered by calling Lexus Approved Dealer Equipment at 1–800–368–6787.

Warranty Information

OP CODE	DESCRIPTION	TIME	OFP	T1	T2
N/A	Not Applicable to Warranty	–	–	–	–

Required SSTs

ITEM NO.	SPECIAL SERVICE TOOLS (SSTs)	PART NUMBER	QTY	DRW**
1	**Radiator Cap Test Set*** 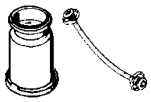	09230–00030–02	1	7
2	**Radiator Cap Test Set (Small)***	09230–00020–02	1	7

* Essential SSTs.

** Refers to drawer number in SST Storage System.

NOTE:

Additional SSTs may be ordered by calling SPX/OTC at 1-800-933-8335.

Radiator Cap Identification Procedure

1. Use the illustration below to identify the vehicle's radiator cap type and kPa rating.
2. Proceed to the required inspection procedure for the radiator cap and kPa rating.

Radiator Cap Identification

kPa Rating

N–Cap

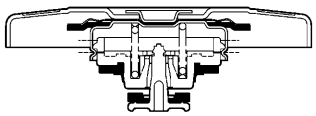

Compact Cap

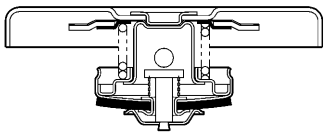

Plastic Cap

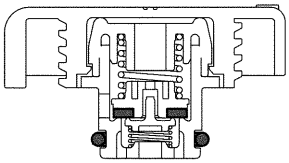

Radiator Cap Inspection Procedure

Type: N–cap, 88 kPa

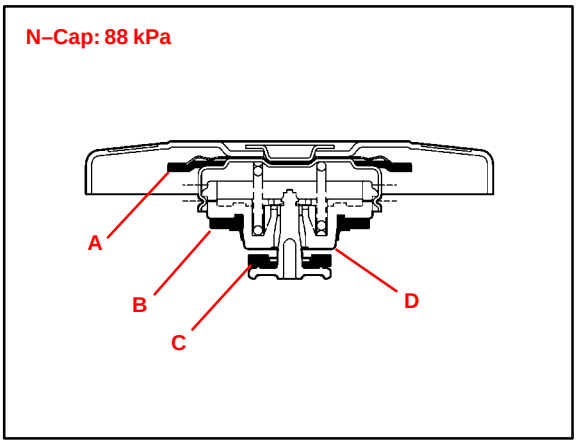

1. Remove coolant and any foreign material on rubber points "A," "B," and "C."
2. Check that points "A," "B," and "C" are not deformed, cracked, or swollen.
3. Check that points "C" and "D" are not stuck together.
4. Apply engine coolant to points "B" and "C" before using the radiator cap tester.
   - Radiator Cap Tester: Snap–On/Sun P/N SVTS262A (or equivalent)
5. Before installing the radiator cap tester, use the applicable radiator cap adaptor provided in the following SST kits in conjunction with the radiator cap tester:
   - SST P/N 09230–00030–02 (09231–10080–01) or 09230–00020–02 (09231–10060–01)
6. When using the radiator cap tester, tilt it more than 30 degrees.
7. Pump the radiator cap tester several times, and check the maximum pressure.

   Pumping speed: 1 pump/second

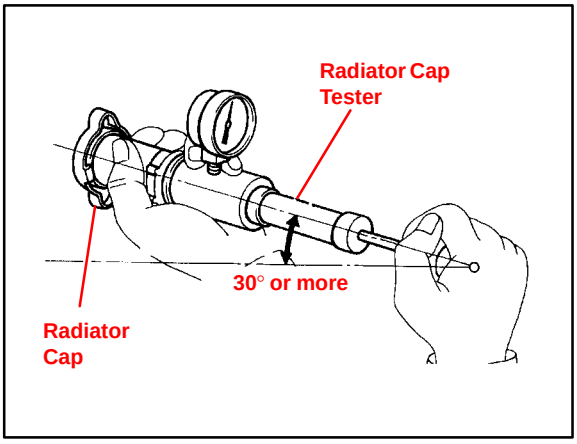

HINT:
Stop pumping when the valve opens and read the gauge. The gauge must be within the standard values listed below when the pressure valve opens. The cap is considered OK when the pressure holds steady or falls very slowly, but holds within the standard values listed below for one minute.

Specification:

VALVE OPENING PRESSURE	SPECIFIED CONDITION
Standard value (for brand–new cap)	74.0 to 103.0 kPa (0.75 to 1.05 kgf/cm^2, 10.7 to 14.9 psi)
Minimum standard value (for in–service cap)	59 kPa (0.60 kgf/cm^2, 8.53 psi)

If the maximum pressure is less than the minimum standard value, replace the radiator cap sub–assembly.

Radiator Cap Inspection Procedure (Continued)

Type: N–cap, 108 kPa

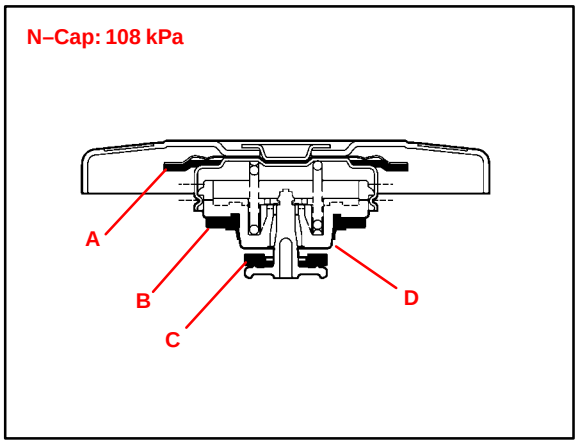

1. Remove coolant and any foreign material on rubber points "A," "B," and "C."
2. Check that points "A," "B," and "C" are not deformed, cracked, or swollen.
3. Check that points "C" and "D" are not stuck together.
4. Apply engine coolant to points "B" and "C" before using the radiator cap tester.
   - Radiator Cap Tester: Snap–On/Sun P/N SVTS262A (or equivalent)
5. Before installing the radiator cap tester, use the applicable radiator cap adaptor provided in the following SST kits in conjunction with the radiator cap tester:
   - SST P/N 09230–00030–02 (09231–10080–01) or 09230–00020–02 (09231–10060–01)
6. When using the radiator cap tester, tilt it more than 30 degrees.
7. Pump the radiator cap tester several times, and check the maximum pressure.

   Pumping speed: 1 pump/second

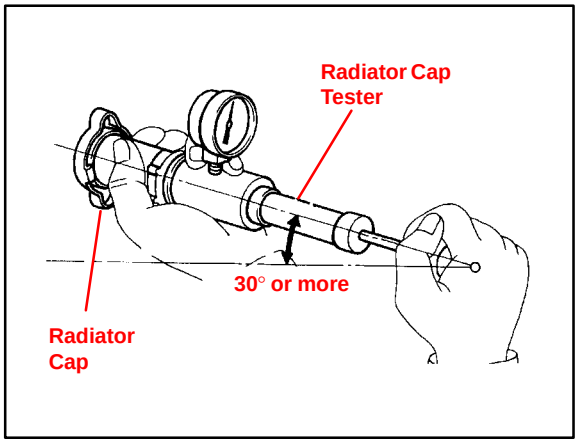

HINT:

Stop pumping when the valve opens and read the gauge. The gauge must be within the standard values listed below when the pressure valve opens. The cap is considered OK when the pressure holds steady or falls very slowly, but holds within the standard values listed below for one minute.

Specification:

VALVE OPENING PRESSURE	SPECIFIED CONDITION
Standard value (for brand–new cap)	93.3 to 122.7 kPa (0.95 to 1.25 kgf/cm^2, 13.5 to 17.8 psi)
Minimum standard value (for in–service cap)	78.5 kPa (0.80 kgf/cm^2, 11.38 psi)

If the maximum pressure is less than the minimum standard value, replace the radiator cap sub–assembly.

Radiator Cap Inspection Procedure (Continued)

Type: Compact Cap, 88 kPa

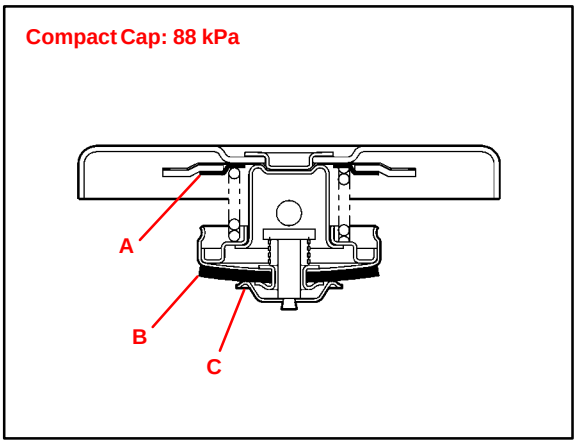

1. Remove coolant and any foreign material on rubber points "A," "B," and "C."
2. Check that points "A" and "B" are not deformed, cracked, or swollen.
3. Check that points "B" and "C" are not stuck together.
4. Apply engine coolant to point "B" before using the radiator cap tester.
   - Radiator Cap Tester: Snap–On/Sun P/N SVTS262A (or equivalent)
5. Before installing the radiator cap tester, use the applicable radiator cap adaptor provided in the following SST kits in conjunction with the radiator cap tester:
   - SST P/N 09230–00030–02 (09231–10080–01) or 09230–00020–02 (09231–10060–01)
6. When using the radiator cap tester, tilt it more than 30 degrees.
7. Pump the radiator cap tester several times, and check the maximum pressure.

   Pumping speed: 1 pump/second

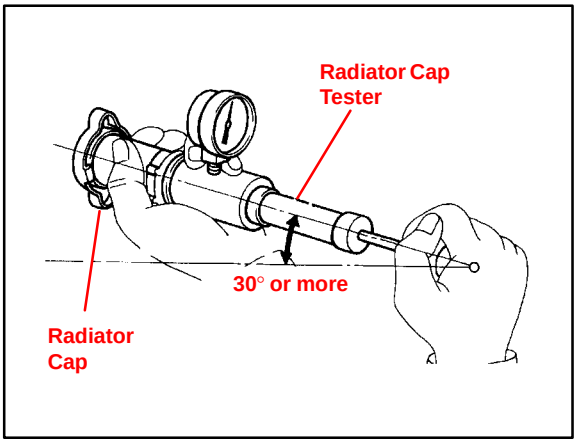

HINT:

Stop pumping when the valve opens and read the gauge. The gauge must be within the standard values listed below when the pressure valve opens. The cap is considered OK when the pressure holds steady or falls very slowly, but holds within the standard values listed below for one minute.

Specification:

VALVE OPENING PRESSURE	SPECIFIED CONDITION
Standard value (for brand–new cap)	74.0 to 103.0 kPa (0.75 to 1.05 kgf/cm^2, 10.7 to 14.9 psi)
Minimum standard value (for in–service cap)	59 kPa (0.60 kgf/cm^2, 8.53 psi)

If the maximum pressure is less than the minimum standard value, replace the radiator cap sub–assembly.

Radiator Cap Inspection Procedure (Continued)

Type: Compact Cap, 108 kPa

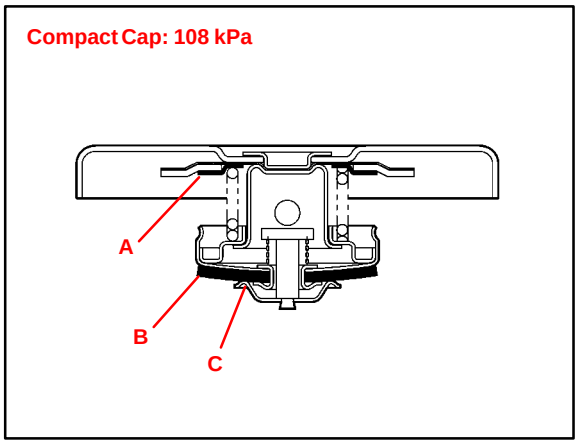

1. Remove coolant and any foreign material on rubber points "A," "B," and "C."
2. Check that points "A" and "B" are not deformed, cracked, or swollen.
3. Check that points "B" and "C" are not stuck together.
4. Apply engine coolant to point "B" before using the radiator cap tester.
   - Radiator Cap Tester: Snap–On/Sun P/N SVTS262A (or equivalent)
5. Before installing the radiator cap tester, use the applicable radiator cap adaptor provided in the following SST kits in conjunction with the radiator cap tester:
   - SST P/N 09230–00030–02 (09231–10080–01) or 09230–00020–02 (09231–10060–01)
6. When using the radiator cap tester, tilt it more than 30 degrees.
7. Pump the radiator cap tester several times, and check the maximum pressure.

   Pumping speed: 1 pump/second

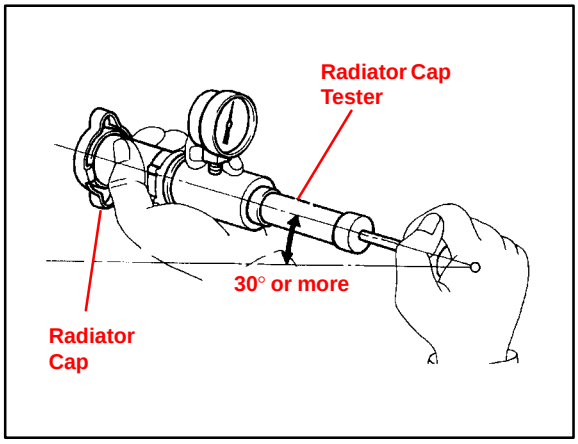

HINT:
Stop pumping when the valve opens and read the gauge. The gauge must be within the standard values listed below when the pressure valve opens. The cap is considered OK when the pressure holds steady or falls very slowly, but holds within the standard values listed below for one minute.

Specification:

VALVE OPENING PRESSURE	SPECIFIED CONDITION
Standard value (for brand–new cap)	93.3 to 122.7 kPa (0.95 to 1.25 kgf/cm^2, 13.5 to 17.8 psi)
Minimum standard value (for in–service cap)	78.5 kPa (0.80 kgf/cm^2, 11.38 psi)

If the maximum pressure is less than the minimum standard value, replace the radiator cap sub–assembly.

Radiator Cap Inspection Procedure (Continued)

Type: Plastic Cap, 108 kPa

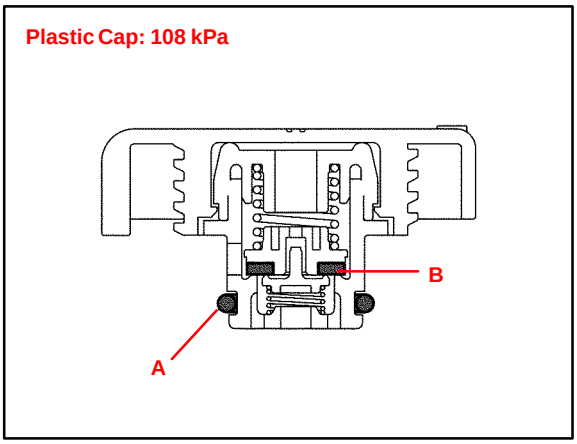

1. Remove coolant and any foreign material on O–ring "A."
2. Check that O–ring "A" is not deformed, cracked, or swollen.
3. Apply engine coolant to O–ring "A" and rubber point "B" before using the radiator cap tester.
   - Radiator Cap Tester: Snap–On/Sun P/N SVTS262A (or equivalent)
4. Before installing the radiator cap tester, use the applicable radiator cap adaptor provided in the following SST kits in conjunction with the radiator cap tester:
   - SST P/N 09230–00030–02 (09231–10080–01) or 09230–00020–02 (09231–10060–01)
5. When using the radiator cap tester, tilt it more than 30 degrees.
6. Pump the radiator cap tester several times, and check the maximum pressure.

   Pumping speed: 1 pump/second

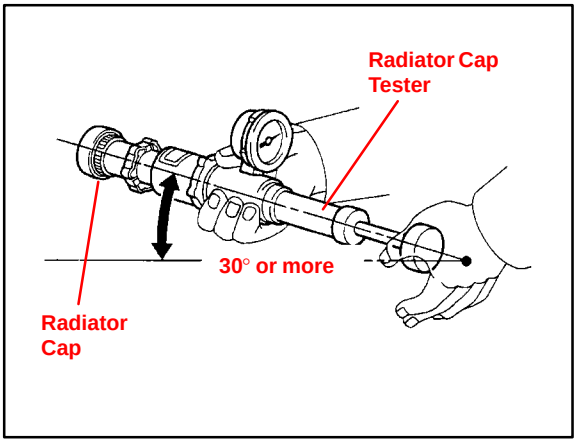

HINT:
Stop pumping when the valve opens and read the gauge. The gauge must be within the standard values listed below when the pressure valve opens. The cap is considered OK when the pressure holds steady or falls very slowly, but holds within the standard values listed below for one minute.

Specification:

VALVE OPENING PRESSURE	SPECIFIED CONDITION
Standard value (for brand–new cap)	93.3 to 122.7 kPa (0.95 to 1.25 kgf/cm^2, 13.5 to 17.8 psi)
Minimum standard value (for in–service cap)	78.5 kPa (0.80 kgf/cm^2, 11.38 psi)

If the maximum pressure is less than the minimum standard value, replace the radiator cap sub–assembly.

HOW TO USE THIS MANUAL

IN00U–56

GENERAL INFORMATION

1. INDEX

An INDEX is provided on the first page of each section to guide you to the item to be repaired. To assist you in finding your way through the manual, the section title and major heading are given at the top of every page.

2. PRECAUTION

At the beginning of each section, a PRECAUTION is given that pertains to all repair operations contained in that section.

Read these precautions before starting any repair task.

3. TROUBLESHOOTING

TROUBLESHOOTING tables are included for each system to help you diagnose the problem and find the cause. The fundamentals of how to proceed with troubleshooting are described on page IN–17.

Be sure to read this before performing troubleshooting.

4. PREPARATION

Preparation lists the SST (Special Service Tools), recommended tools, equipment, lubricant and SSM (Special Service Materials) which should be prepared before beginning the operation and explains the purpose of each one.

5. REPAIR PROCEDURES

Most repair operations begin with an overview illustration. It identifies the components and shows how the parts fit together.

Example:

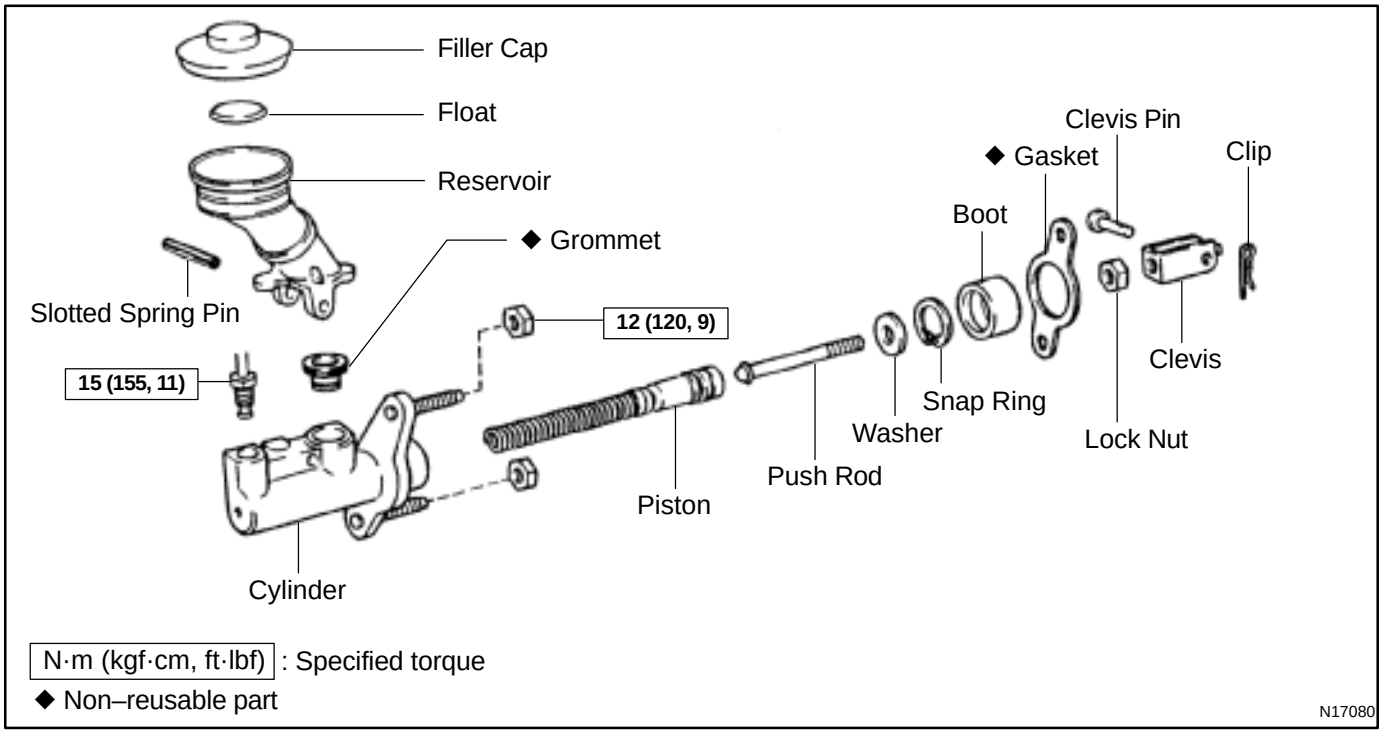

The procedures are presented in a step–by–step format:

- The illustration shows what to do and where to do it.
- The task heading tells what to do.
- The detailed text tells how to perform the task and gives other information such as specifications and warnings.

Example:

Task heading : what to do

Illustration: what to do and where

21. CHECK PISTON STROKE OF OVERDRIVE BRAKE

(a) Place SST and a dial indicator onto the overdrive brake piston as shown in the illustration.

SST 09350–30020 (09350–06120)

Set part No. *Component part No.*

Detailed text : how to do task

(b) Measure the stroke applying and releasing the compressed air (392 — 785 kPa, 4 — 8 kgf/cm^2 or 57 — 114 psi) as shown in the illustration.

Piston stroke: 1.40 — 1.70 mm (0.0551 — 0.0669 in.)

Specification

This format provides the experienced technician with a FAST TRACK to the information needed. The upper case task heading can be read at a glance when necessary, and the text below it provides detailed information. Important specifications and warnings always stand out in bold type.

6. REFERENCES

References have been kept to a minimum. However, when they are required you are given the page to refer to.

7. SPECIFICATIONS

Specifications are presented in bold type throughout the text where needed. You never have to leave the procedure to look up your specifications. They are also found in Service Specifications section for quick reference.

8. CAUTIONS, NOTICES, HINTS:

- CAUTIONS are presented in bold type, and indicate there is a possibility of injury to you or other people.
- NOTICES are also presented in bold type, and indicate the possibility of damage to the components being repaired.
- HINTS are separated from the text but do not appear in bold. They provide additional information to help you perform the repair efficiently.

9. SI UNIT

The UNITS given in this manual are primarily expressed according to the SI UNIT (International System of Unit), and alternately expressed in the metric system and in the English System.

Example:

Torque: 30 N·m (310 kgf·cm, 22 ft·lbf)

IDENTIFICATION INFORMATION

IN04P–16

VEHICLE IDENTIFICATION AND ENGINE SERIAL NUMBER

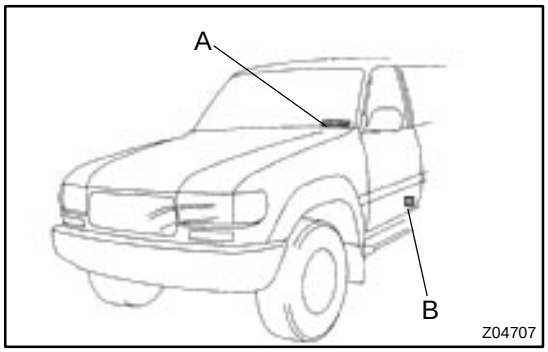

1. VEHICLE IDENTIFICATION NUMBER

The vehicle identification number is stamped on the vehicle identification number plate and the certification label, as shown in the illustration.

A: Vehicle Identification Number Plate
B: Certification Label

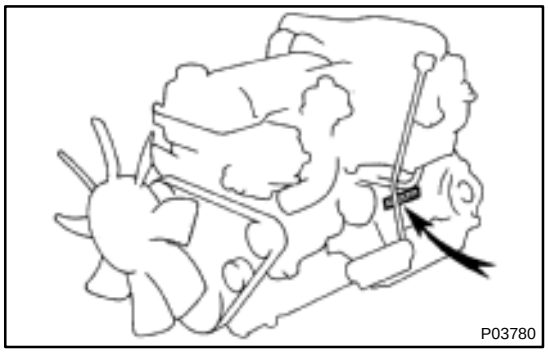

2. ENGINE SERIAL NUMBER

The engine serial number is stamped on the engine block, as shown in the illustration.

REPAIR INSTRUCTIONS

IN0GU–01

GENERAL INFORMATION

1. BASIC REPAIR HINT

(a) Use fender, seat and floor covers to keep the vehicle clean and prevent damage.

(b) During disassembly, keep parts in the appropriate order to facilitate reassembly.

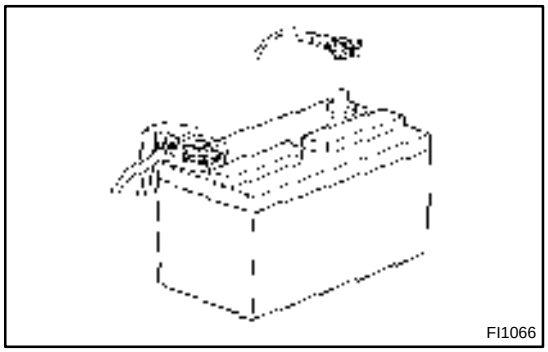

(c) Installation and removal of battery terminal:

(1) Before performing electrical work, disconnect the negative (–) terminal cable from the battery.

(2) If it is necessary to disconnect the battery for inspection or repair, first disconnect the negative (–) terminal cable.

(3) When disconnecting the terminal cable, to prevent damage to battery terminal, loosen the cable nut and raise the cable straight up without twisting or prying it.

(4) Clean the battery terminals and cable ends with a clean shop rag. Do not scrape them with a file or other abrasive objects.

(5) Install the cable ends to the battery terminals after loosening the nut, and tighten the nut after installation. Do not use a hammer to tap the cable ends onto the terminals.

(6) Be sure the cover for the positive (+) terminal is properly in place.

(d) Check hose and wiring connectors to make sure that they are connected securely and correctly.

(e) Non–reusable parts

(1) Always replace cotter pins, gaskets, O–rings, oil seals, etc. with new ones.

(2) Non–reusable parts are indicated in the component illustrations by the ”◆” symbol.

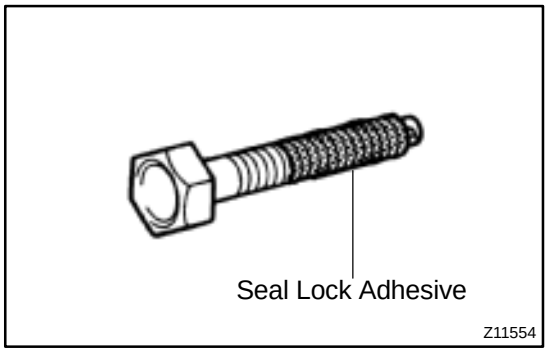

(f) Precoated parts

Precoated parts are bolts, nuts, etc. that are coated with a seal lock adhesive at the factory.

(1) If a precoated part is retightened, loosened or caused to move in any way, it must be recoated with the specified adhesive.

(2) When reusing precoated parts, clean off the old adhesive and dry with compressed air. Then apply the specified seal lock adhesive to the bolt, nut or threads.

(3) Precoated parts are indicated in the component illustrations by the "★" symbol.

(g) When necessary, use a sealer on gaskets to prevent leaks.

(h) Carefully observe all specifications for bolt tightening torques. Always use a torque wrench.

(i) Use of special service tools (SST) and special service materials (SSM) may be required, depending on the nature of the repair. Be sure to use SST and SSM where specified and follow the proper work procedure. A list of SST and SSM can be found in Preparation section in this manual.

Medium Current Fuse and High Current Fuse Equal Amperage Rating

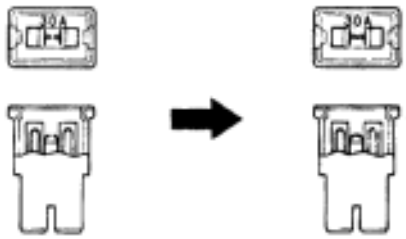

(j) When replacing fuses, be sure the new fuse has the correct amperage rating. DO NOT exceed the rating or use one with a lower rating.

Illustration	Symbol	Part Name	Abbreviation
BE5594	IN0365	FUSE	FUSE
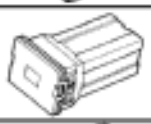 BE5595	IN0366	MEDIUM CURRENT FUSE	M–FUSE
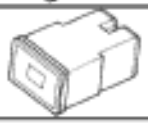 BE5596	IN0367	HIGH CURRENT FUSE	H–FUSE
BE5597	IN0367	FUSIBLE LINK	FL
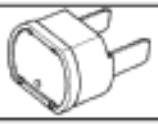 BE5598	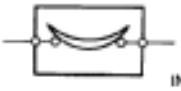 IN0368	CIRCUIT BREAKER	CB

V00076

(k) Care must be taken when jacking up and supporting the vehicle. Be sure to lift and support the vehicle at the proper locations (See page IN–8).
- Cancel the parking brake on the level place and shift the transmission in Neutral (or N position).
- When jacking up the front wheels of the vehicle at first place stoppers behind the rear wheels.
- When jacking up the rear wheels of the vehicle at first place stoppers before the front wheels.
- When either the front or rear wheels only should be jacked up, set rigid racks and place stoppers in front and behind the other wheels on the ground.
- After the vehicle is jacked up, be sure to support it on rigid racks . It is extremely dangerous to do any work on a vehicle raised on a jack alone, even for a small job that can be finished quickly.

(l) Observe the following precautions to avoid damage to the following parts:

(1) Do not open the cover or case of the ECU unless absolutely necessary. (If the IC terminals are touched, the IC may be destroyed by static electricity.)

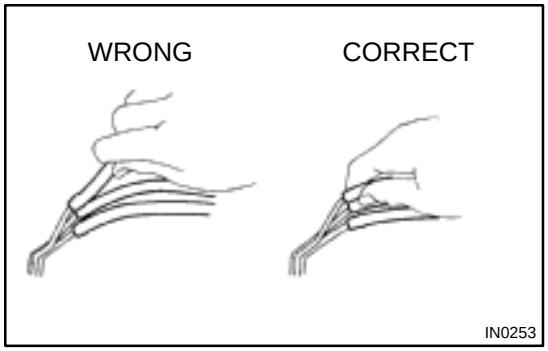

(2) To disconnect vacuum hoses, pull off the end, not the middle of the hose.

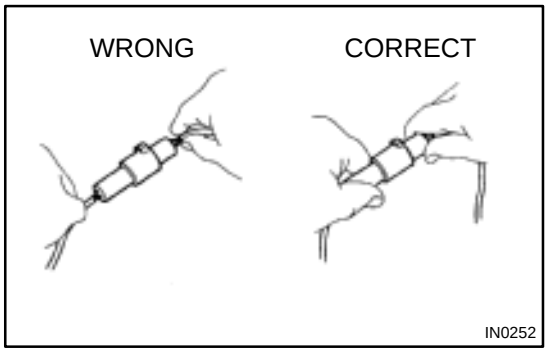

(3) To pull apart electrical connectors, pull on the connector itself, not the wires.

(4) Be careful not to drop electrical components, such as sensors or relays. If they are dropped on a hard floor, they should be replaced and not reused.

(5) When steam cleaning an engine, protect the electronic components, air filter and emission–related components from water.

(6) Never use an impact wrench to remove or install temperature switches or temperature sensors.

(7) When checking continuity at the wire connector, insert the tester probe carefully to prevent terminals from bending.

(8) When using a vacuum gauge, never force the hose onto a connector that is too large. Use a step–down adapter for adjustment. Once the hose has been stretched, it may leak air.

Example

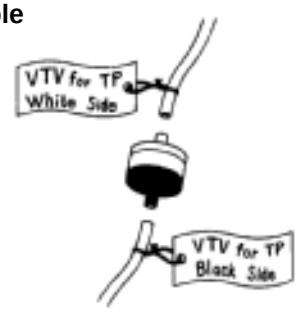

IN0002

(m) Installation and removal of vacuum hose:

(1) When disconnecting vacuum hoses, use tags to identify how they should be reconnected to.

(2) After completing a job, double check that the vacuum hoses are properly connected. A label under the hood shows the proper layout.

(n) Unless otherwise stated, all resistance is measured at an ambient temperature of 20˚C (68˚F). Because the resistance may be outside specifications if measured at high temperatures immediately after the vehicle has been running, measurement should be made when the engine has cooled down.

IN0H2–03

VEHICLE LIFT AND SUPPORT LOCATIONS

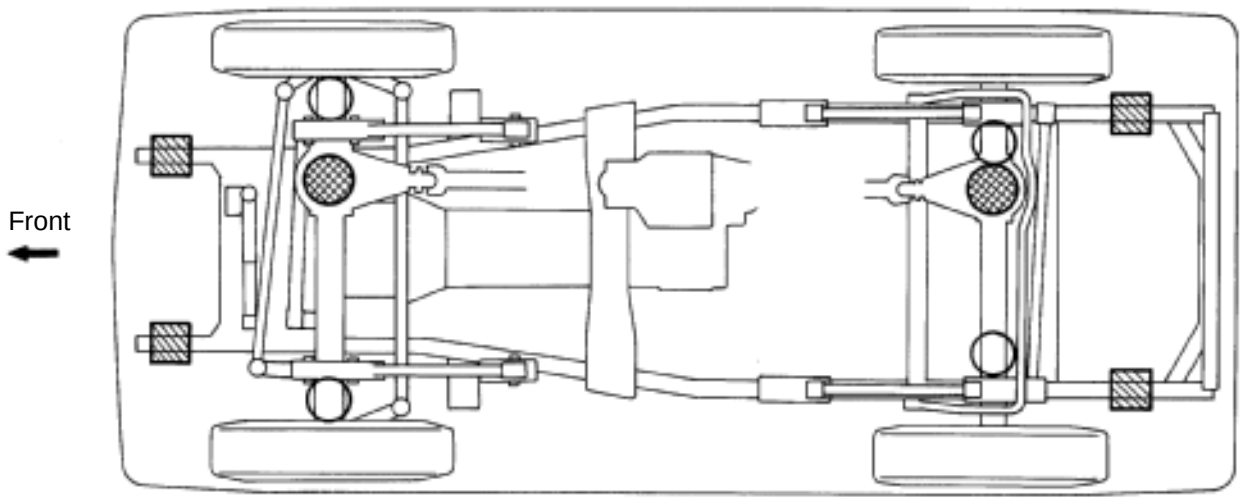

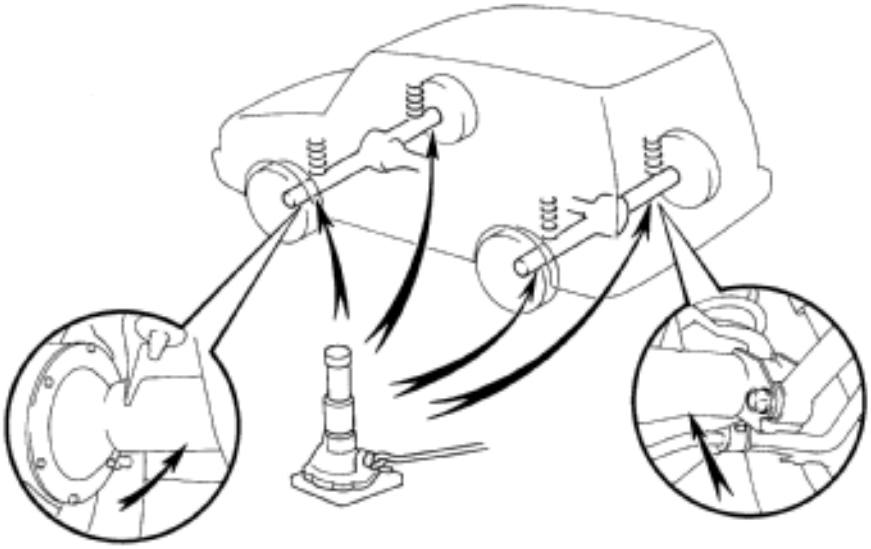

JACK POSITION

Front ..... Under the front differential

Rear ..... Under the rear differential

SCREW TYPE JACK POSITION

SUPPORT POSITION

Safety stand .....

Z00796

FOR ALL OF VEHICLES

IN0H3–03

PRECAUTION

1. FOR VEHICLES EQUIPPED WITH SRS AIRBAG AND SEAT BELT PRETENSIONER

(a) The LEXUS LX450 is equipped with an SRS (Supplemental Restraint System), such as the driver airbag, front passenger airbag. Failure to carry out service operations in the correct sequence could cause the supplemental restraint system to unexpectedly deploy during servicing, possibly leading to a serious accident. Further, if a mistake is made in servicing the supplemental restraint system, it is possible the SRS may fail to operate when required. Before servicing (including removal or installation of parts, inspection or replacement), be sure to read the following items carefully, then follow the correct procedure described in this manual.

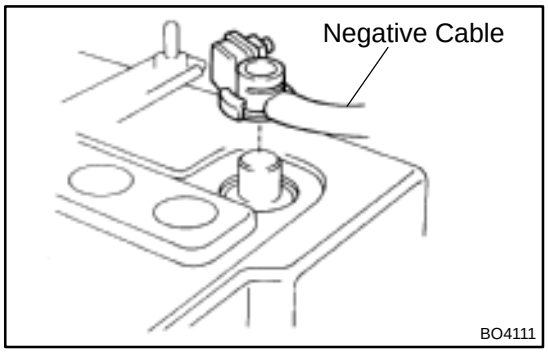

(b) GENERAL NOTICE

(1) Malfunction symptoms of the supplemental restraint system are difficult to confirm, so the diagnostic trouble codes become the most important source of information when troubleshooting. When troubleshooting the supplemental restraint system, always inspect the diagnostic trouble codes before disconnecting the battery (See page DI–227).

(2) Work must be started after 90 seconds from the time the ignition switch is turned to the ”LOCK” position and the negative (–) terminal cable is disconnected from the battery.
(The supplemental restraint system is equipped with a back–up power source so that if work is started within 90 seconds of disconnecting the negative (–) terminal cable from the battery, the SRS may deploy.)
When the negative (–) terminal cable is disconnected from the battery, memory of the clock and audio systems will be cancelled. So before starting work, make a record of the contents memorized by the each memory system. Then when work is finished, reset the clock and audio systems as before. To avoid erasing the memory of each memory system, never use a back–up power supply from another battery.

(3) Even in cases of a minor collision where the SRS does not deploy, the steering wheel pad (See page RS–9), front passenger airbag assembly (See page RS–23) should be inspected.

(4) Never use SRS parts from another vehicle. When replacing parts, replace them with new parts.

(5) Before repairs, remove the airbag sensor if shocks are likely to be applied to the sensor during repairs.

(6) Never disassemble and repair the airbag sensor assembly, steering wheel pad, front passenger airbag assembly or seat belt pretensioner in order to reuse them.

(7) If the airbag sensor assembly, steering wheel pad, front passenger airbag assembly have been dropped, or if there are cracks, dents or other defects in the case, bracket or connector, replace them with new ones.

(8) Do not directly expose the airbag sensor assembly, steering wheel pad, front passenger airbag assembly to hot air or flames.

(9) Use a volt/ohmmeter with high impedance (10 kΩ/V minimum) for troubleshooting of the electrical circuit.

(10) Information labels are attached to the periphery of the SRS components. Follow the instructions on the notices.

(11) After work on the supplemental restraint system is completed, check the SRS warning light (See page DI–227).

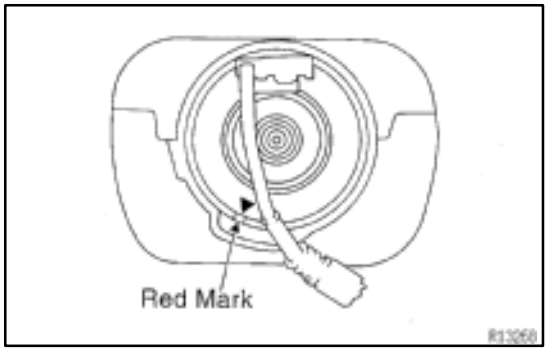

(c) SPIRAL CABLE (in Combination Switch)

The steering wheel must be fitted correctly to the steering column with the spiral cable at the neutral position, otherwise cable disconnection and other troubles may result. Refer to SR–19 of this manual concerning correct steering wheel installation.

(d) STEERING WHEEL PAD (with Airbag)

(1) When removing the steering wheel pad or handling a new steering wheel pad, it should be placed with the pad top surface facing up.
Storing the pad with its metallic surface facing upward may lead to a serious accident if the airbag inflates for some reason. In addition do not store a steering wheel pad on top of another one.

(2) Never measure the resistance of the airbag squib. (This may cause the airbag to deploy, which is very dangerous.)

(3) Grease should not be applied to the steering wheel pad and the pad should not be cleaned with detergents of any kind.

(4) Store the steering wheel pad where the ambient temperature remains below 93˚C (200˚F), without high humidity and away from electrical noise.

(5) When using electric welding, first disconnect the airbag connector (yellow color and 2 pins) under the steering column near the combination switch connector before starting work.

(6) When disposing of a vehicle or the steering wheel pad alone, the airbag should be deployed using an SST before disposal (See page RS–11).
Perform the operation in a safe place away from electrical noise.

Example:

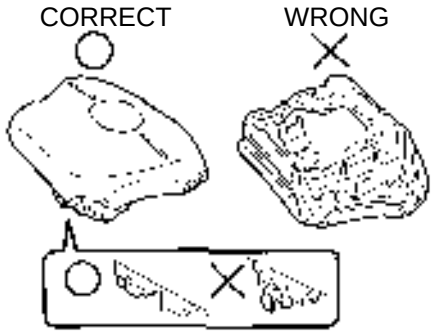

R13254 B12090

Example:

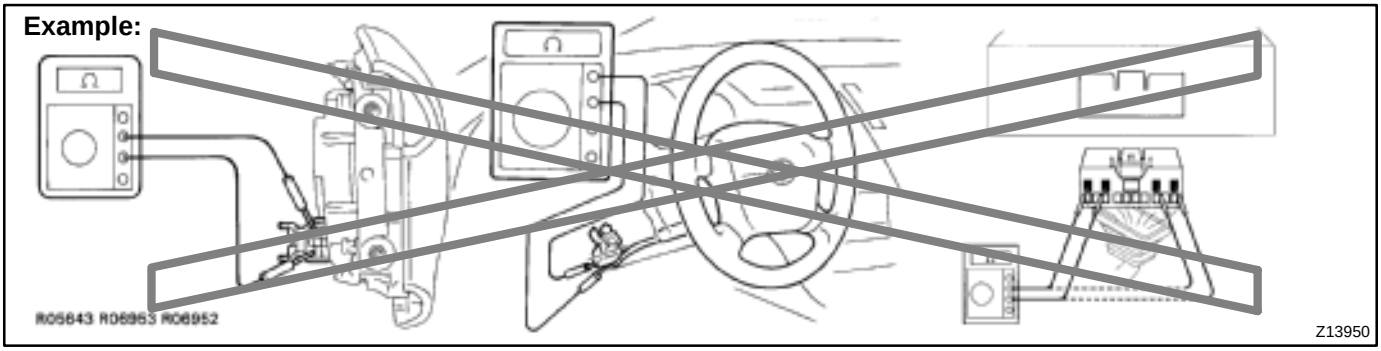

Z13950

(e) FRONT PASSENGER AIRBAG ASSEMBLY

(1) Always store a removed or new front passenger airbag assembly with the airbag deployment direction facing up.
Storing the airbag assembly with the airbag deployment direction facing down could cause a serious accident if the airbag inflates.

(2) Never measure the resistance of the airbag squib. (This may cause the airbag to deploy, which is very dangerous.)

(3) Grease should not be applied to the front passenger airbag assembly and the airbag door should not be cleaned with detergents of any kind.

(4) Store the airbag assembly where the ambient temperature remains below 93˚C (200˚F), without high humidity and away from electrical noise.

(5) When using electric welding, first disconnect the airbag connector (yellow color and 2 pins) installed on the assembly before starting work.

(6) When disposing of a vehicle or the airbag assembly alone, the airbag should be deployed using an SST before disposal (See page RS–25).
Perform the operation in a safe place away from electrical noise.

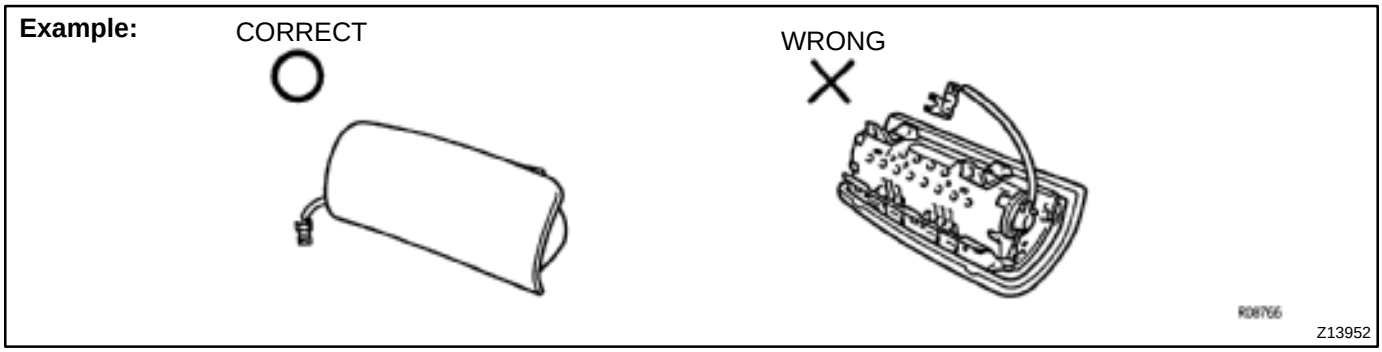

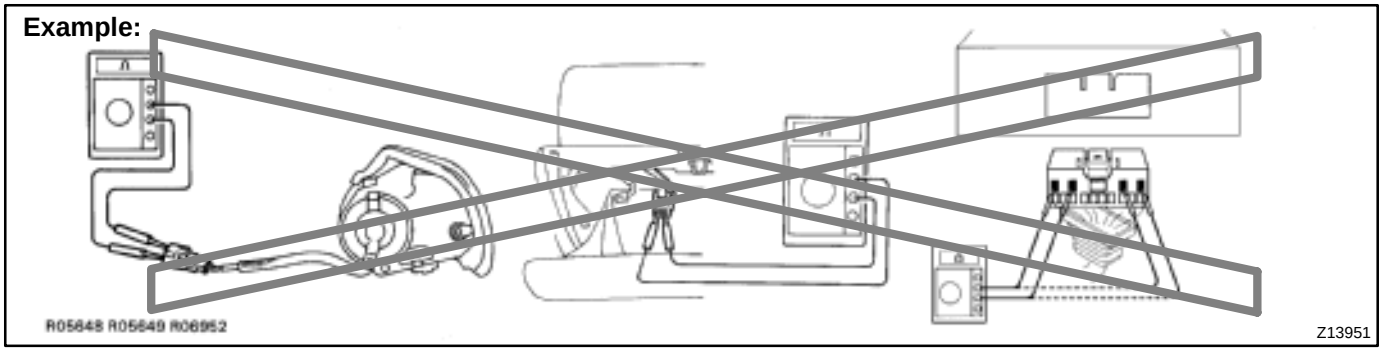

(f) AIRBAG SENSOR ASSEMBLY

The connectors to the airbag sensor assembly should be connected or disconnected with the sensor mounted on the floor. If the connectors are connected or disconnected while the airbag sensor assembly is not mounted to the floor, it could cause undesired ignition of the supplemental restraint system.

(g) WIRE HARNESS AND CONNECTOR

The SRS wire harness is integrated with the cowl wire harness assembly and floor wire harness assembly. The wires for the SRS wire harness are encased in a yellow corrugated tube. All the connectors for the system are also a standard yellow color. If the SRS wire harness becomes disconnected or the connector becomes broken due to an accident, etc., repair or replace it as shown on page RS–38.

2. WHEN TOWING FULL–TIME 4WD VEHICLES

- Use one of the methods shown below to tow the vehicle.
- If the vehicle has trouble in the chassis and drive train, use method 1 (flat bed truck).

Condition / Towing Method	Parking Brake	Transmission Shift Lever Position	Transfer Shift Lever Position	(w/o ABS) Center Differential Lock Switch	Center Differential
① Flat Bed Truck 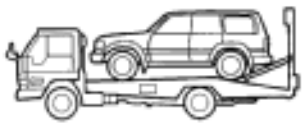 IN0309	Applied	"P" Range	"H" Position	OFF	FREE (Normal Driving)
② Wheel Lift Type Truck with Dollies 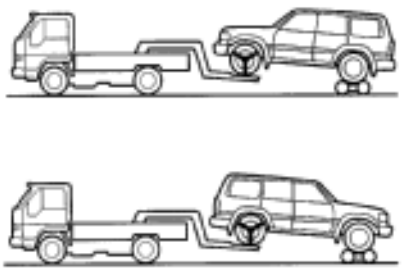					
③ Towing with Rope 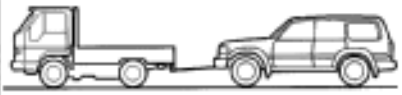 IN0312	Released	"N" Range	"N" Position	OFF	↑

HINT : Do not use any towing methods other than those shown above.
For example, the towing method shown below is dangerous, so do not use it.

NO 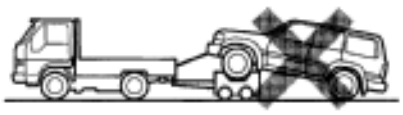 IN0313	During towing with this towing method, there is a danger of the drive train heating up and causing breakdown, or of the front wheels flying off the dolly.

M06127

3. FOR VEHICLES EQUIPPED WITH A CATALYTIC CONVERTER

CAUTION:

If large amount of unburned gasoline flows into the converter, it may overheat and create a fire hazard. To prevent this, observe the following precautions and explain them to your customer.

(a) Use only unleaded gasoline.

(b) Avoid prolonged idling.
Avoid running the engine at idle speed for more than 20 minutes.

(c) Avoid spark jump test.
  (1) Perform spark jump test only when absolutely necessary. Perform this test as rapidly as possible.
  (2) While testing, never race the engine.

(d) Avoid prolonged engine compression measurement.
Engine compression tests must be done as rapidly as possible.

(e) Do not run engine when fuel tank is nearly empty.
This may cause the engine to misfire and create an extra load on the converter.

(f) Avoid coasting with ignition turned off and prolonged braking.

(g) Do not dispose of used catalyst along with parts contaminated with gasoline or oil.

4. IF VEHICLE IS EQUIPPED WITH MOBILE COMMUNICATION SYSTEM

For vehicles with mobile communication systems such as two–way radios and cellular telephones, observe the following precautions.

(1) Install the antenna as far as possible away from the ECU and sensors of the vehicle's electronic system.
(2) Install the antenna feeder at least 20 cm (7.87 in.) away from the ECU and sensors of the vehicle's electronic systems. For details about ECU and sensors locations, refer to the section on the applicable component.
(3) Do not wind the antenna feeder together with the other wiring as much as possible, also avoid running the antenna feeder parallel with other wire harnesses.
(4) Check that the antenna and feeder are correctly adjusted.
(5) Do not install powerful mobile communications system.

5. FOR USING OBD II SCAN TOOL OR LEXUS HAND–HELD TESTER

CAUTION:

Observe the following items for safety reasons:

- **Before using the OBD II scan tool or LEXUS hand–held tester, the OBD II scan tool's instruction book or LEXUS hand–held tester's operator manual should be read thoroughly.**
- **Be sure to route all cables securely when driving with the OBD II scan tool or LEXUS hand–held tester connected to the vehicle. (i.e. Keep cables away from feet, pedals, steering wheel and shift lever.)**
- **Two persons are required when test driving with the OBD II scan tool or LEXUS hand–held tester, one person to drive the vehicle and the other person to operate the OBD II scan tool or LEXUS hand–held tester.**

HOW TO TROUBLESHOOT ECU CONTROLLED SYSTEMS

IN04S–24

GENERAL INFORMATION

A large number of ECU controlled systems are used in the LEXUS LX450. In general, the ECU controlled system is considered to be a very intricate system requiring a high level of technical knowledge and expert skill to troubleshoot. However, the fact is that if you proceed to inspect the circuits one by one, troubleshooting of these systems is not complex. If you have adequate understanding of the system and a basic knowledge of electricity, accurate diagnosis and necessary repair can be performed to locate and fix the problem. This manual is designed through emphasis of the above standpoint to help service technicians perform accurate and effective troubleshooting, and is compiled for the following major ECU controlled systems:
The troubleshooting procedure and how to make use of it are described on the following pages.

System	Page
1. Engine	DI–1
2. Automatic Transmission	DI–120
3. Anti–Lock Brake System	DI–178
4. Supplemental Restraint System	DI–225
5. Cruise Control System	DI–272

FOR USING OBDII SCAN TOOL OR LEXUS HAND–HELD TESTER

- Before using the OBDII scan tool or LEXUS hand–held tester, the OBDII scan tool's instruction book or LEXUS hand–held tester's operator manual should be read thoroughly.
- If the OBDII scan tool or LEXUS hand–held tester cannot communicate with ECU controlled systems when you have connected the cable of the OBDII scan tool or LEXUS hand–held tester to DLC3, Turned the ignition switch ON and operated the scan tool, there is a problem on the vehicle side or tool side.
  (1) If communication is normal when the tool is connected to another vehicle, inspect the diagnosis data link line (Bus⊕line) or ECU power circuit of the vehicle.
  (2) If communication is still not possible when the tool is connected to another vehicle, the problem is probably in the tool itself, so perform the Self Test procedures outlined in the Tester Operator's Manual.

IN04T–13

HOW TO PROCEED WITH TROUBLESHOOTING

Carry out troubleshooting in accordance with the procedure on the following page. Here, only the basic procedure is shown. Details are provided in DI section, showing the most effective methods for each circuit. Confirm the troubleshooting procedures first for the relevant circuit before beginning troubleshooting of that circuit.

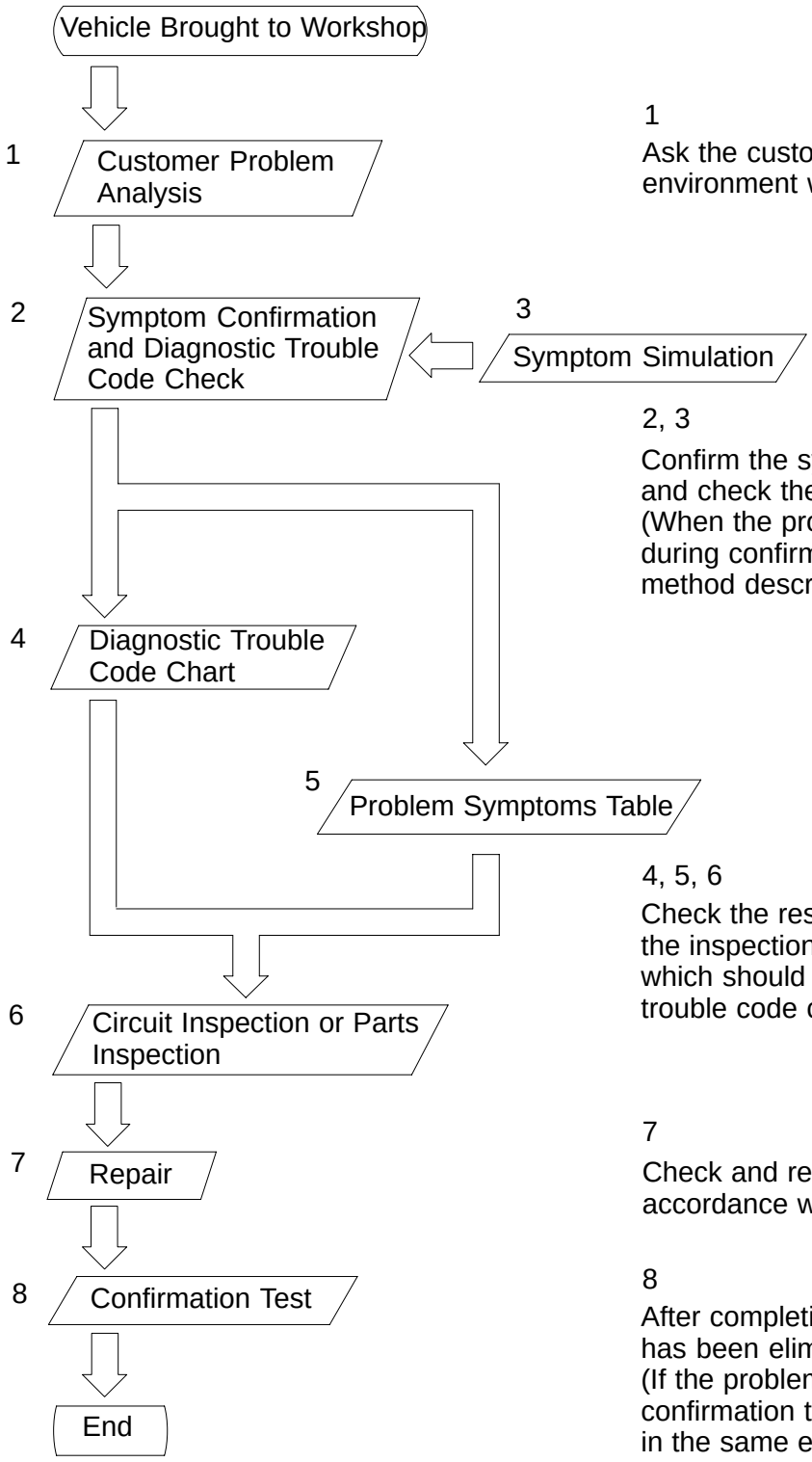

1
Ask the customer about the conditions and the environment when the problem occurred.

2, 3
Confirm the symptoms and the problem conditions, and check the diagnostic trouble codes.
(When the problem symptoms do not appear during confirmation, use the symptom simulation method described later on.)

4, 5, 6
Check the results obtained in Step 2, then confirm the inspection procedure for the system or the part which should be checked using the diagnostic trouble code chart or the problem symptoms table.

7
Check and repair the affected system or part in accordance with the instructions in Step 6.

8
After completing repairs, confirm that the problem has been eliminated.
(If the problem is not reproduced, perform the confirmation test under the same conditions and in the same environment as when it occurred for the first time.)

1. CUSTOMER PROBLEM ANALYSIS

In troubleshooting, the problem symptoms must be confirmed accurately and all preconceptions must be cleared away in order to give an accurate judgment. To ascertain just what the problem symptoms are, it is extremely important to ask the customer about the problem and the conditions at the time it occurred.

Important Point in the Problem Analysis:

The following 5 items are important points in the problem analysis. Past problems which are thought to be unrelated and the repair history, etc. may also help in some cases, so as much information as possible should be gathered and its relationship with the problem symptoms should be correctly ascertained for reference in troubleshooting. A customer problem analysis table is provided in DI section for each system for your use.

Important Points in the Customer Problem Analysis

- What ——— Vehicle model, system name
- When ——— Date, time, occurrence frequency
- Where ——— Road conditions
- Under what conditions? ——— Running conditions, driving conditions, weather conditions
- How did it happen? ——— Problem symptoms

(Sample) Engine control system check sheet.

CUSTOMER PROBLEM ANALYSIS CHECK

ENGINE CONTROL SYSTEM Check Sheet

Inspector's Name _____

Customer's Name		**Model and Model Year**	
Driver's Name		**Frame No.**	
Data Vehicle Brought in		**Engine Model**	
License No.		**Odometer Reading**	km miles

Problem Symptoms	☐ **Engine does not Start**	☐ **Engine does not crank** ☐ **No initial combustion** ☐ **No complete combustion**
	☐ **Difficult to Start**	☐ **Engine cranks slowly** ☐ **Other** _____
	☐ **Poor Idling**	☐ **Incorrect first idle** ☐ **Idling rpm is abnormal** ☐ **High (rpm)** ☐ **Low (rpm)** ☐ **Rough idling** ☐ **Other** _____
	☐ **Poor Drive ability**	☐ **Hesitation** ☐ **Back fire** ☐ **Muffler explosion (after–fire)** ☐ **Surging** ☐ **Knocking** ☐ **Other** _____
	☐ **Engine Stall**	☐ **Soon after starting** ☐ **After accelerator pedal depressed** ☐ **After accelerator pedal released** ☐ **During A/C operation** ☐ **Shifting from N to D** ☐ **Other** _____
	☐ **Others**	

onstant ☐ **Sometimes (times per day/month)**

2. SYMPTOM CONFIRMATION AND DIAGNOSTIC TROUBLE CODE CHECK

The diagnostic system in the LEXUS LX450 fulfills various functions. The first function is the Diagnostic Trouble Code Check in which a malfunction in the signal circuits to the ECU is stored in code in the ECU memory at the time of occurrence, to be output by the technician during troubleshooting. Another function is the Input Signal Check which checks if the signals from various switches are sent to the ECU correctly. By using these check functions, the problem areas can be narrowed down quickly and troubleshooting can be performed effectively. Diagnostic functions are incorporated in the following systems in the LEXUS LX450.

System	Diagnostic Trouble Code Check	Input Signal Check (Sensor Check)	Other Diagnosis Function
Engine	○ (with Check Mode)	○	Diagnostic Test Mode
Automatic Transmission	○ (with Check Mode)	○	Diagnostic Test Mode
Anti–Lock Brake System	○	○	
Supplemental Restraint System	○	○	

In diagnostic trouble code check, it is very important to determine whether the problem indicated by the diagnostic trouble code is still occurring or occurred in the past but returned to normal at present. In addition, it must be checked in the problem symptom check whether the malfunction indicated by the diagnostic trouble code is directly related to the problem symptom or not. For this reason, the diagnostic trouble codes should be checked before and after the symptom confirmation to determine the current conditions, as shown in the table below. If this is not done, it may, depending on the case, result in unnecessary troubleshooting for normally operating systems, thus making it more difficult to locate the problem, or in repairs not pertinent to the problem. Therefore, always follow the procedure in correct order and perform the diagnostic trouble code check.

DIAGNOSTIC TROUBLE CODE CHECK PROCEDURE

Diagnostic Trouble Code Check (Make a note of and then clear)	**Confirmation of Symptoms**	**Diagnostic Trouble Code Check**	**Problem Condition**
Diagnostic Trouble Code Display	Problem symptoms exist	Same diagnostic trouble code is displayed	Problem is still occurring in the diagnostic circuit
		Normal code is displayed	The problem is still occurring in a place other than in the diagnostic circuit (The diagnostic trouble code displayed first is either for a past problem or it is a secondary problem)
	No problem symptoms exist		The problem occurred in the diagnostic circuit in the past
Normal Code Display	Problem symptoms exist	Normal code is displayed	The problem is still occurring in a place other than in the diagnostic circuit
	No problem symptoms exist	Normal code is displayed	The problem occurred in a place other than in the diagnostic circuit in the past

Taking into account the above points, a flow chart showing how to proceed with troubleshooting using the diagnostic trouble code check is shown below. This flow chart shows how to utilize the diagnostic trouble code check effectively, then by carefully checking the results, indicates how to proceed either to diagnostic trouble code troubleshooting or to troubleshooting of problem symptoms.

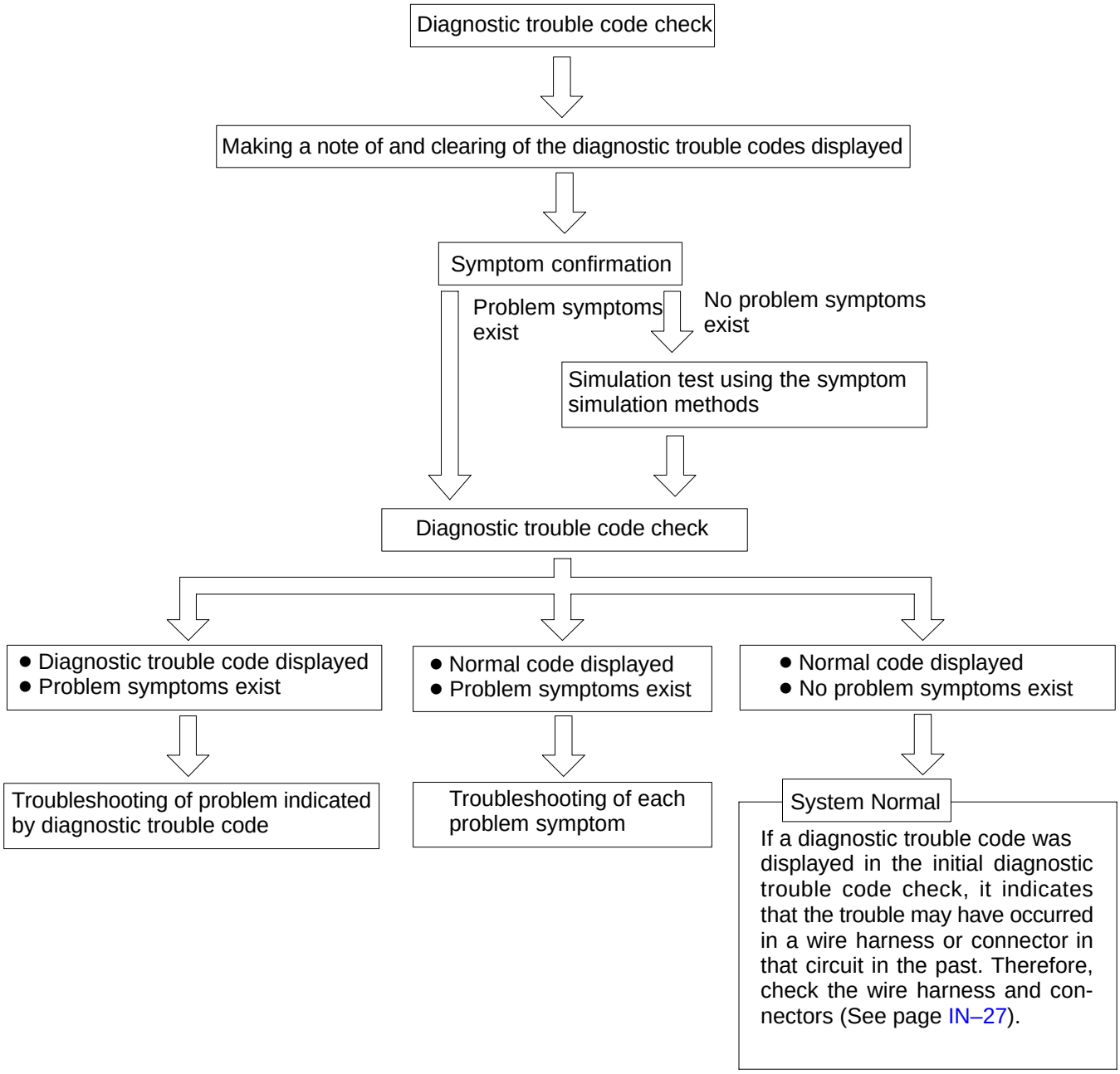

3. SYMPTOM SIMULATION

The most difficult case in troubleshooting is when there are no problem symptoms occurring. In such cases, a thorough customer problem analysis must be carried out, then simulate the same or similar conditions and environment in which the problem occurred in the customer's vehicle. No matter how much experience a technician has, or how skilled he may be, if he proceeds to troubleshoot without confirming the problem symptoms he will tend to overlook something important in the repair operation and make a wrong guess somewhere, which will only lead to a standstill. For example, for a problem which only occurs when the engine is cold, or for a problem which occurs due to vibration caused by the road during driving, etc., the problem can never be determined so long as the symptoms are confirmed with the engine hot condition or the vehicle at a standstill. Since vibration, heat or water penetration (moisture) is likely cause for problem which is difficult to reproduce, the symptom simulation tests introduced here are effective measures in that the external causes are applied to the vehicle in a stopped condition.

Important Points in the Symptom Simulation Test:

In the symptom simulation test, the problem symptoms should of course be confirmed, but the problem area or parts must also be found out. To do this, narrow down the possible problem circuits according to the symptoms before starting this test and connect a tester beforehand. After that, carry out the symptom simulation test, judging whether the circuit being tested is defective or normal and also confirming the problem symptoms at the same time. Refer to the problem symptoms table for each system to narrow down the possible causes of the symptom.

1	**VIBRATION METHOD: When vibration seems to be the major cause.**
CONNECTORS Slightly shake the connector vertically and horizontally. **WIRE HARNESS** Slightly shake the wire harness vertically and horizontally. The connector joint, fulcrum of the vibration, and body through portion are the major areas to be checked thoroughly.	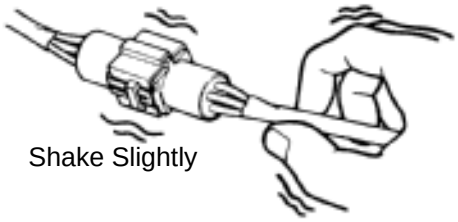 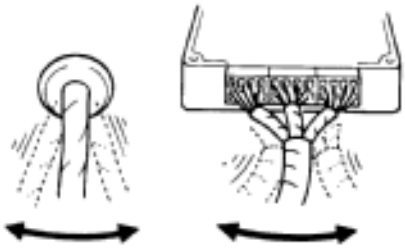 FI2331 FI2332
PARTS AND SENSOR Apply slight vibration with a finger to the part of the sensor considered to be the problem cause and check that the malfunction occurs. HINT: Applying strong vibration to relays may result in open relays.	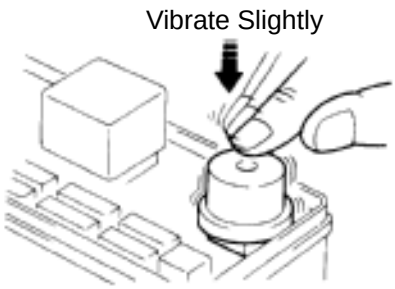 FI2330

V07268

2	**HEAT METHOD: When the problem seems to occur when the suspect area is heated.**
Heat the component that is the likely cause of the malfunction with a hair dryer or similar object. Check to see if the malfunction occurs. **NOTICE:** **(1) Do not heat to more than 60 ˚C (140 ˚F). (Temperature is limited not to damage the components.)** **(2) Do not apply heat directly to parts in the ECU.**	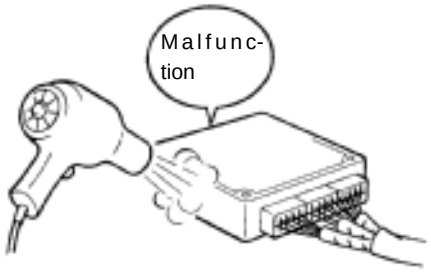 FI2334

3	**WATER SPRINKLING METHOD: When the malfunction seems to occur on a rainy day or in a high–humidity condition.**
Sprinkle water onto the vehicle and check to see if the malfunction occurs. **NOTICE:** **(1) Never sprinkle water directly into the engine compartment, but indirectly change the temperature and humidity by applying water spray onto the radiator front surface.** **(2) Never apply water directly onto the electronic components.** HINT: If a vehicle is subject to water leakage, the leaked water may contaminate the ECU. When testing a vehicle with a water leakage problem, special caution must be taken.	 FI6649

4	**OTHER: When a malfunction seems to occur when electrical load is excessive.**
Turn on all electrical loads including the heater blower, head lights, rear window defogger, etc. and check to see if the malfunction occurs.	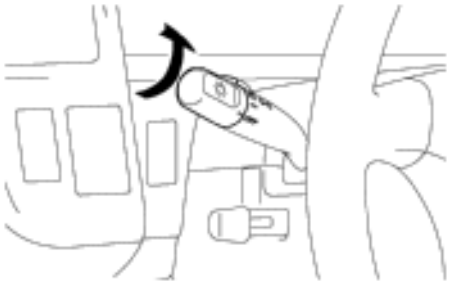 B02389

B02390

4. DIAGNOSTIC TROUBLE CODE CHART

The inspection procedure is shown in the table below. This table permits efficient and accurate troubleshooting using the diagnostic trouble codes displayed in the diagnostic trouble code check. Proceed with troubleshooting in accordance with the inspection procedure given in the diagnostic chart corresponding to the diagnostic trouble codes displayed. The engine diagnostic trouble code chart is shown below as an example.

- DTC No.
  Indicates the diagnostic trouble code.
- Page or Instructions
  Indicates the page where the inspection procedure for each circuit is to be found, or gives instructions for checking and repairs.

- Trouble Area
  Indicates the suspect area of the problem.

- Detection Item
  Indicates the system of the problem or contents of the problem.

DIAGNOSTIC TROUBLE CODE CHART

HINT:
Parameters listed in the chart may not be exactly the same as your reading due to the type of instrument or other factors.

If a malfunction code is displayed during the DTC check mode, check the circuit for the code listed in the table below. For details of each code, turn to the page referred to under the ”See page” for the respective ”DTC No.” in the DTC chart.

SAE CONTROLLED

DTC No. (See page)	Detection Item	Trouble Area	MIL*	Memory
P0100 (DI–24)	Mass Air Flow Circuit Malfunction	● Open or short in mass air flow meter circuit ● Mass air flow meter ● ECM	○	○
P0101 (DI–28)	Mass Air Flow Circuit Range/ Performance Problem	● Mass air flow meter	○	○
P0110 (DI–29)	Intake Air Temp. Circuit Malfunction	● Open or short in intake air temp. sensor circuit ● Intake air temp. sensor ● ECM	○	○
P0115 (DI–33)	Engine Coolant Temp. Circuit Malfunction	● Open or short in engine coolant temp. sensor circuit ● Engine coolant temp. sensor ● ECM	○	○
P0116 (DI–37)	Engine Coolant Temp. Circuit Range/ Performance Problem	● Engine coolant temp. sensor ● Cooling system	○	○
[illegible]	[illegible] Pedal Position Sensor/Switch [illegible]nction	● Open or short in throttle position sensor circuit ● Throttle position sensor ● ECM	[illegible]	[illegible]
[illegible]	[illegible]osition Sensor/ Switch [illegible]rformance Prob-	● Throttle position sensor		

5. PROBLEM SYMPTOMS TABLE

The suspected circuits or parts for each problem symptom are shown in the table below. Use this table to troubleshoot the problem when a ”Normal” code is displayed in the diagnostic trouble code check but the problem is still occurring. Numbers in the table indicate the inspection order in which the circuits or parts should be checked.

HINT:

When the problem is not detected by the diagnostic system even though the problem symptom is present, it is considered that the problem is occurring outside the detection range of the diagnostic system, or that the problem is occurring in a system other than the diagnostic system.

- Page
  Indicates the page where the flow chart for each circuit is located.
- Circuit Inspection, Inspection Order
  Indicates the circuit which needs to be checked for each problem symptom. Check in the order indicated by the numbers.
- Problem Symptom
- Circuit or Part Name
  Indicates the circuit or part which needs to be checked.

PROBLEM SYMPTOMS TABLE

Symptom	Suspect Area	See page
Engine does not crank (Does not start)	1. Starter and starter relay	ST–2 ST–17
No initial combustion (Does not start)	1. ECM power source circuit 2. Fuel pump control circuit 3. Engine control module (ECM)	DI–147 DI–151 IN–29
No complete combustion (Does not start)	1. Fuel pump control circuit	DI–151
Engine cranks normally (Difficult to start)	1. Starter signal circuit 2. Fuel pump control circuit 3. Compression	DI–144 DI–151 EM–3
Cold engine (Difficult to start)	1. Starter signal circuit 2. Fuel pump control circuit	DI–144 DI–151
Hot engine	1. Starter signal circuit 2. Fuel pump control circuit	DI–144 DI–151
idle speed (Poor idling)	1. A/C signal circuit (Compressor circuit) 2. ECM power source circuit	AC–88
ling)	1. A/C signal circuit 2. Fuel pump control circuit	
	1. Compression 2. Fuel pump control circuit	

6. CIRCUIT INSPECTION

How to read and use each page is shown below.

● Diagnostic Trouble Code No. and Detection Item

● Circuit Description
The major role and operation, etc. of the circuit and its component parts are explained.

DTC	P0325	Knock Sensor 1 Circuit Malfunction

CIRCUIT DESCRIPTION

Knock sensor is fitted to the cylinder block to detect engine knocking. This sensor contains a piezoelectric element which generates a voltage when it becomes deformed, which occurs when the cylinder block vibrates due to knocking. If engine knocking occurs, ignition timing is retarded to suppress it.

DTC No.	DTC Detecting Condition	Trouble Area
P0325	No knock sensor 1 signal to ECM with engine speed, 1,200 rpm or more.	● Open or short in knock sensor1 circuit ● Knock sensor 1 (looseness) ● ECM

If the ECM detects the above diagnosis conditions, it operates the fail safe function in which the corrective retard angle value is set to the maximum value.

● Indicates the diagnostic trouble code, diagnostic trouble code set parameter and suspect area of the problem.

WIRING DIAGRAM

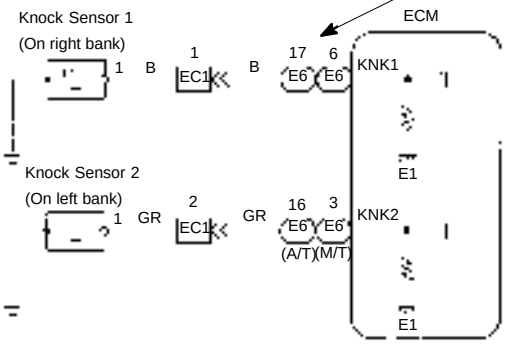

P19919

● Wiring Diagram
This shows a wiring diagram of the circuit.
Use this diagram together with ELECTRICAL WIRING DIAGRAM to thoroughly understand the circuit.
Wire colors are indicated by an alphabetical code.
B = Black, L = Blue, R = Red, BR = Brown,
LG = Light Green, V = Violet, G = Green,
O = Orange, W = White, GR = Gray, P = Pink,
Y = Yellow
The first letter indicates the basic wire color and the second letter indicates the color of the stripe.

B10216

● Indicates the position of the ignition switch during the check.

LOCK
Ignition Switch LOCK (OFF)

ON
Ignition Switch ON

START
Ignition Switch START

ACC
Ignition Switch ACC

● Inspection Procedure
Use the inspection procedure to determine if the circuit is normal or abnormal, and, if it is abnormal, use it to determine whether the problem is located in the sensors, actuators, wire harness or ECU.

INSPECTION PROCEDURE

1	**Check continuity between terminal KNK of ECM connector and body ground.**

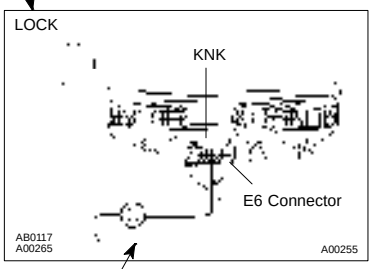

PREPARATION:
(a) Remove the glove compartment (See page SF–68).
(b) Disconnect the E6 connector of ECM.

CHECK:
Measure resistance between terminal KNK of ECM connector and body ground.

OK:
Resistance: 1 MΩ or higher

OK → **Go to step 3.**

NG

2	**Check knock sensor (See page SF–61).**

OK → **Replace knock sensor.**

● Indicates the place to check the voltage or resistance.
● Indicates the connector position to checked, from the front or back side.

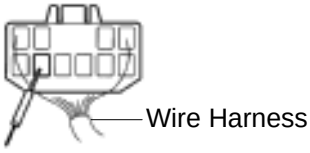

Check from the connector back side. (with harness)

Check from the connector front side. (without harness)
In this case, care must be taken not to bend the terminals.

● Indicates the condition of the connector of ECU during the check.

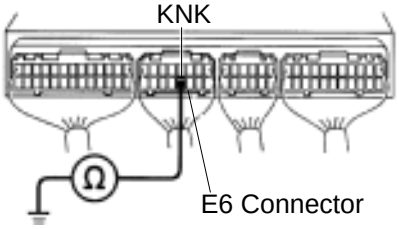

Connector being checked is connected.

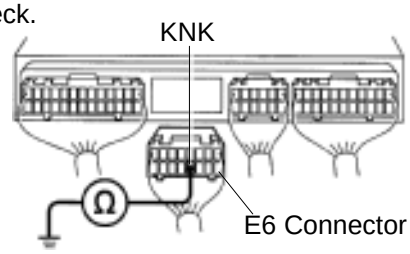

Connector being checked is disconnected.

V08425

IN011–30

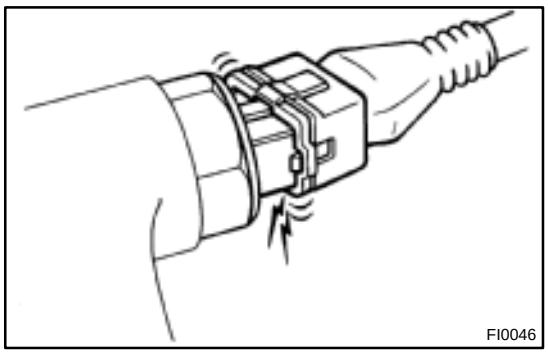
FI0046

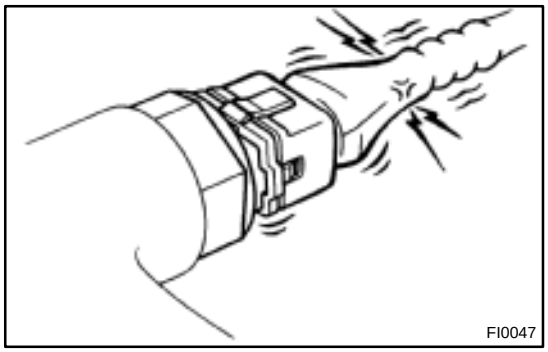
FI0047

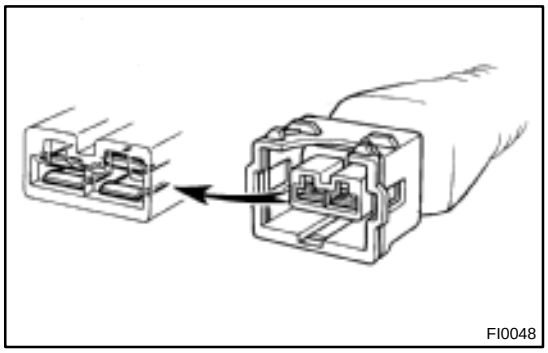
FI0048

HOW TO USE THE DIAGNOSTIC CHART AND INSPECTION PROCEDURE

1. CONNECTOR CONNECTION AND TERMINAL INSPECTION

- For troubleshooting, diagnostic trouble code charts or problem symptom table are provided for each circuit with detailed inspection procedures on the following pages.
- When all the component parts, wire harnesses and connectors of each circuit except the ECU are found to be normal in troubleshooting, then it is determined that the problem is in the ECU. Accordingly, if diagnosis is performed without the problem symptoms occurring, refer to Step 8 to replace the ECU. So always confirm that the problem symptoms are occurring, or proceed with inspection while using the symptom simulation method.
- The instructions ”Check wire harness and connector” and ”Check and replace ECU” which appear in the inspection procedure, are common and applicable to all diagnostic trouble codes. Follow the procedure outlined below whenever these instructions appear.

OPEN CIRCUIT:

This could be due to a disconnected wire harness, faulty contact in the connector, a connector terminal pulled out, etc.

HINT:

- It is rarely the case that a wire is broken in the middle of it. Most cases occur at the connector. In particular, carefully check the connectors of sensors and actuators
- Faulty contact could be due to rusting of the connector terminals, to foreign materials entering terminals or a deformation of connector terminals. Simply disconnecting and reconnecting the connectors once changes the condition of the connection and may result in a return to normal operation. Therefore, in troubleshooting, if no abnormality is found in the wire harness and connector check, but the problem disappears after the check, then the cause is considered to be in the wire harness or connectors.

SHORT CIRCUIT:

This could be due to a contact between wire harness and the body ground or to a short circuit occurred inside the switch, etc.

HINT:

When there is a short circuit between the wire harness and body ground, check thoroughly whether the wire harness is caught in the body or is clamped properly.

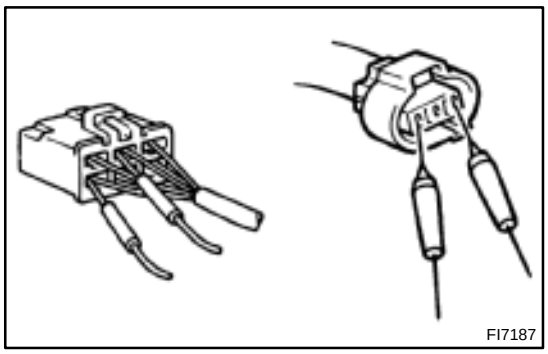

2. CONNECTOR HANDLING

When inserting tester probes into a connector, insert them from the rear of the connector. When necessary, use mini test leads. For water resistant connectors which cannot be accessed from behind, take good care not to deform the connector terminals.

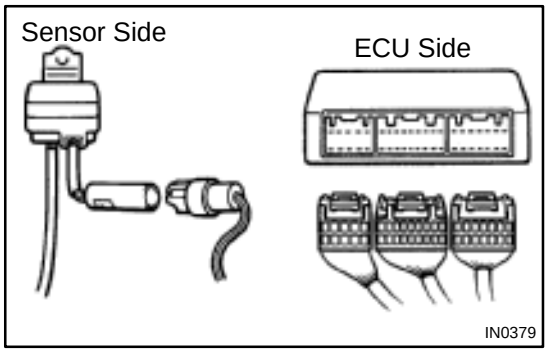

3. CONTINUITY CHECK (OPEN CIRCUIT CHECK)

(a) Disconnect the connectors at both ECU and sensor sides.

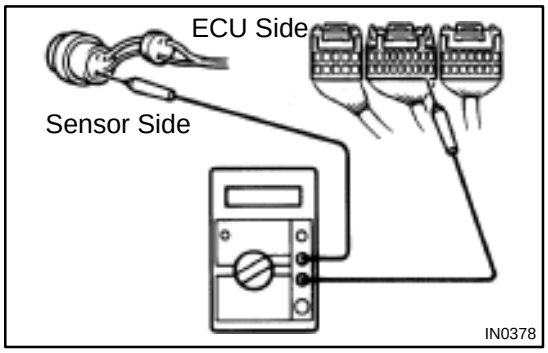

(b) Measure the resistance between the applicable terminals of the connectors.
Resistance: 1 Ω or less

HINT:
Measure the resistance while lightly shaking the wire harness vertically and horizontally.

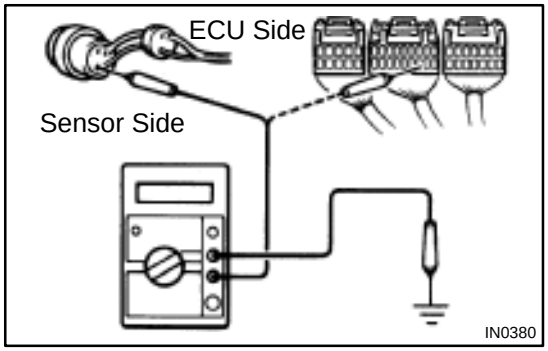

4. RESISTANCE CHECK (SHORT CIRCUIT CHECK)

(a) Disconnect the connectors on both ends.
(b) Measure the resistance between the applicable terminals of the connectors and body ground. Be sure to carry out this check on the connectors on both ends.
Resistance: 1 MΩ or higher

HINT:
Measure the resistance while lightly shaking the wire harness vertically and horizontally.

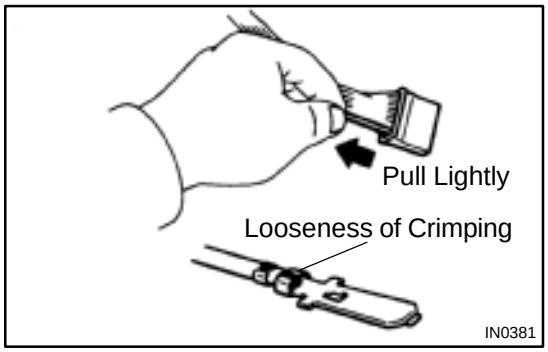

5. VISUAL CHECK AND CONTACT PRESSURE CHECK

(a) Disconnect the connectors at both ends.
(b) Check for rust or foreign material, etc. in the terminals of the connectors.
(c) Check crimped portions for looseness or damage and check that the terminals are secured in lock portion.

HINT:
The terminals should not come out when pulled lightly from the back.

(d) Prepare a test male terminal and insert it in the female terminal, then pull it out.

NOTICE:

When testing a gold–plated female terminal, always use a gold–plated male terminal.

HINT:

When the test terminal is pulled out more easily than others, there may be poor contact in that section.

Fig. 1

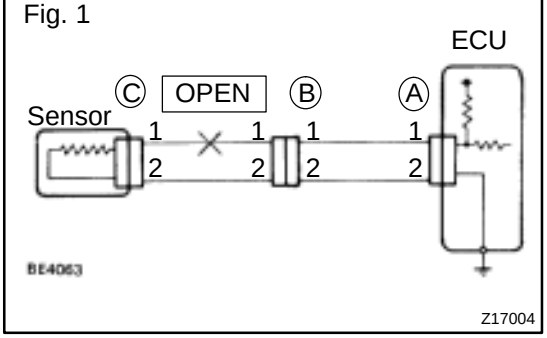

6. CHECK OPEN CIRCUIT

For the open circuit in the wire harness in Fig. 1, perform ”(a) Continuity Check” or ”(b) Voltage Check” to locate the section.

Fig. 2

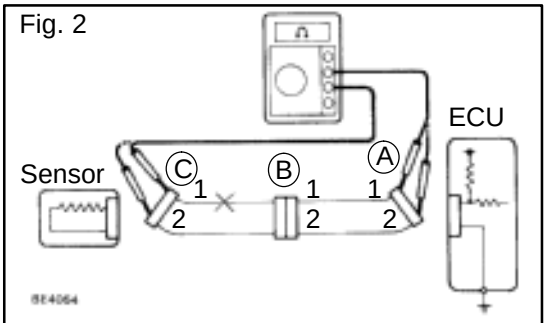

(a) Check the continuity.

(1) Disconnect connectors ”A” and ”C” and measure the resistance between them.

In the case of Fig. 2:

Between terminal 1 of connector ”A” and terminal 1 of connector ”C” → No continuity (open)

Between terminal 2 of connector ”A” and terminal 2 of connector ”C” → Continuity

Therefore, it is found out that there is an open circuit between terminal 1 of connector ”A” and terminal 1 of connector ”C”.

Fig. 3

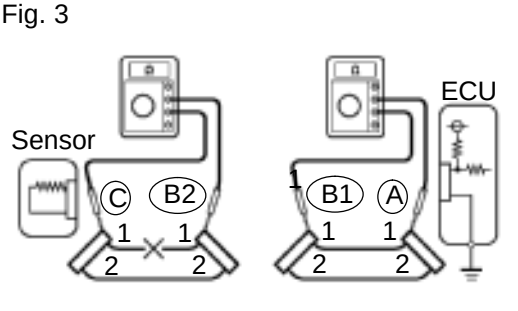

(2) Disconnect connector ”B” and measure the resistance between the connectors.

In the case of Fig. 3:

Between terminal 1 of connector ”A” and terminal 1 of connector ”B1” → Continuity

Between terminal 1 of connector ”B2” and terminal 1 of connector ”C” → No continuity (open)

Therefore, it is found out that there is an open circuit between terminal 1 of connector ”B2” and terminal 1 of connector ”C”.

Fig. 4

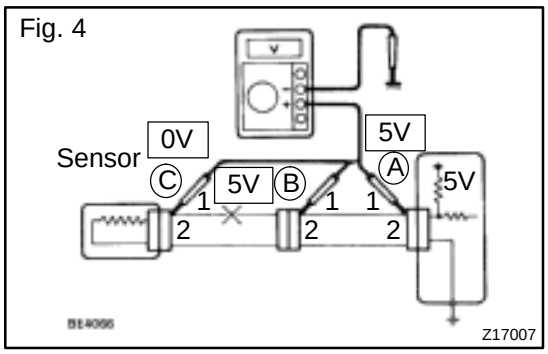

(b) Check the voltage.

In a circuit in which voltage is applied (to the ECU connector terminal), an open circuit can be checked for by conducting a voltage check.

As shown in Fig. 4, with each connector still connected, measure the voltage between body ground and terminal 1 of connector ”A” at the ECU 5V output terminal, terminal 1 of connector ”B”, and terminal 1 of connector ”C”, in that order.

If the results are:

5V: Between Terminal 1 of connector ”A” and Body Ground
5V: Between Terminal 1 of connector ”B” and Body Ground
0V: Between Terminal 1 of connector ”C” and Body Ground

Then it is found out that there is an open circuit in the wire harness between terminal 1 of ”B” and terminal 1 of ”C”.

Fig. 5

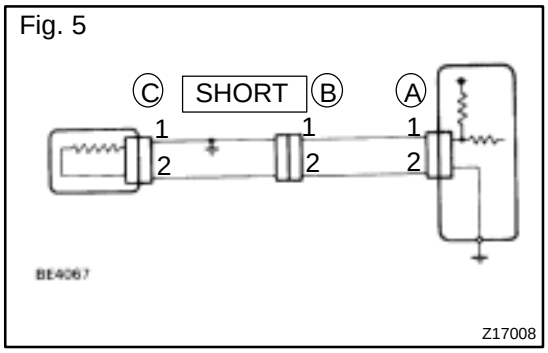

7. CHECK SHORT CIRCUIT

If the wire harness is ground shorted as in Fig. 5, locate the section by conducting a ”continuity check with ground”.

Fig. 6

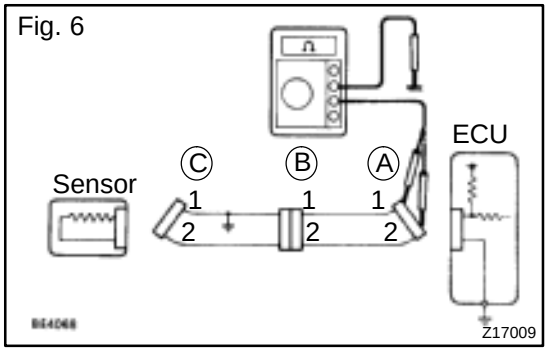

Check the continuity with ground.

(1) Disconnect connectors ”A” and ”C” and measure the resistance between terminal 1 and 2 of connector ”A” and body ground.

In the case of Fig. 6:

Between terminal 1 of connector ”A” and body ground → Continuity (short)

Between terminal 2 of connector ”A” and body ground → No continuity

Therefore, it is found out that there is a short circuit between terminal 1 of connector ”A” and terminal 1 of connector ”C”.

Fig. 7

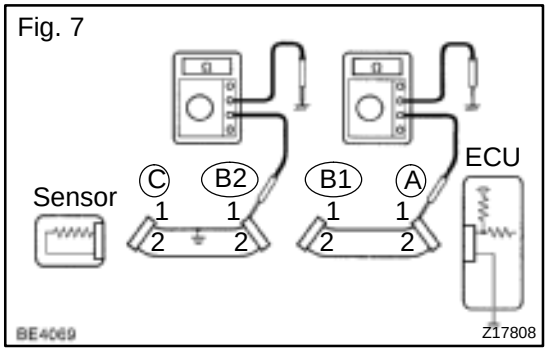

(2) Disconnect connector ”B” and measure the resistance between terminal 1 of connector ”A” and body ground, and terminal 1 of connector ”B2” and body ground.
In the case of Fig. 7:
Between terminal 1 of connector ”A” and body ground → No continuity
Between terminal 1 of connector ”B2” and body ground → Continuity (short)
Therefore, it is found out that there is a short circuit between terminal 1 of connector ”B2” and terminal 1 of connector ”C”.

8. CHECK AND REPLACE ECU

First check the ECU ground circuit. If it is faulty, repair it. If it is normal, the ECU could be faulty, so replace the ECU with a normal functioning one and check that the symptoms appear.

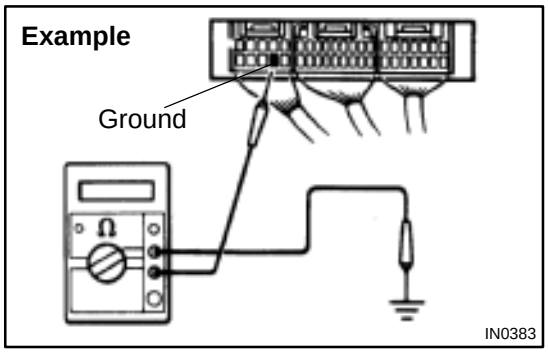

(1) Measure the resistance between the ECU ground terminal and the body ground.

Resistance: 1 Ω or less

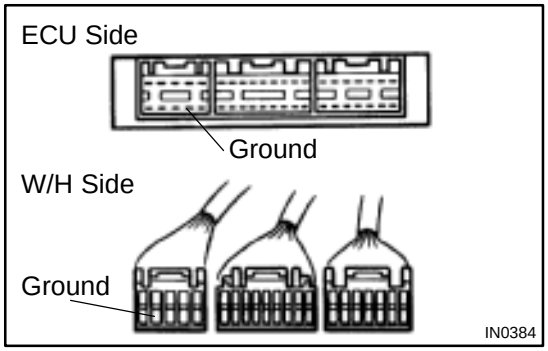

(2) Disconnect the ECU connector, check the ground terminals on the ECU side and the wire harness side for bend and check the contact pressure.

TERMS

IN04Q–10

ABBREVIATIONS USED IN THIS MANUAL

Abbreviations	Meaning
ABS	Anti–Lock Brake System
AC	Alternating Current
ACC	Accessory
ACIS	Acoustic Control Induction System
ACSD	Automatic Cold Start Device
A.D.D.	Automatic Disconnecting Differential
A/F	Air–Fuel Ratio
AHC	Active Height Control Suspension
ALR	Automatic Locking Retractor
ALT	Alternator
AMP	Amplifier
ANT	Antenna
APPROX.	Approximately
A/T	Automatic Transmission (Transaxle)
ATF	Automatic Transmission Fluid
AUTO	Automatic
AUX	Auxiliary
AVG	Average
AVS	Adaptive Variable Suspension
BA	Brake Assist
BACS	Boost Altitude Compensation System
BAT	Battery
BDC	Bottom Dead Center
B/L	Bi–Level
B/S	Bore–Stroke Ratio
BTDC	Before Top Dead Center
BVSV	Bimetallic Vacuum Switching Valve
Calif.	California
CB	Circuit Breaker
CCo	Catalytic Converter For Oxidation
CD	Compact Disc
CF	Cornering Force
CG	Center Of Gravity
CH	Channel
COMB.	Combination
CPE	Coupe
CPS	Combustion Pressure Sensor
CPU	Central Processing Unit
CRS	Child Restraint System
CTR	Center
C/V	Check Valve
CV	Control Valve

CW	Curb Weight
DC	Direct Current
DEF	Defogger
DFL	Deflector
DIFF.	Differential
DIFF. LOCK	Differential Lock
D/INJ	Direct Injection
DLI	Distributorless Ignition
DOHC	Double Over Head Cam
DP	Dash Pot
DS	Dead Soak
DSP	Digital Signal Processor
EBD	Electronic Brake Force Distribution
ECAM	Engine Control And Measurement System
ECD	Electronic Controlled Diesel
ECDY	Eddy Current Dynamometer
ECU	Electronic Control Unit
ED	Electro–Deposited Coating
EDIC	Electric Diesel Injection Control
EDU	Electronic Driving Unit
EFI	Electronic Fuel Injection
E/G	Engine
EGR–VM	Egr–Vacuum Modulator
ELR	Emergency Locking Retractor
ENG	Engine
ESA	Electronic Spark Advance
ETCS	Electronic Throttle Control System
EVP	Evaporator
E–VRV	Electric Vacuum Regulating Valve
EXH	Exhaust
FE	Fuel Economy
FF	Front–Engine Front–Wheel–Drive
F/G	Fuel Gage
FIPG	Formed In Place Gasket
FL	Fusible Link
F/P	Fuel Pump
FPU	Fuel Pressure Up
Fr	Front
FR	Front–Engine Rear–Wheel–Drive
F/W	Flywheel
FW/D	Flywheel Damper
FWD	Front–Wheel–Drive
GAS	Gasoline
GND	Ground
HAC	High Altitude Compensator
H/B	Hatchback

H–FUSE	High Current Fuse
HI	High
HID	High Intensity Discharge (Head Lamp)
HSG	Housing
HT	Hard Top
HWS	Heated Windshield System
IAC	Idle Air Control
IC	Integrated circuit
IDI	Indirect Diesel Injection
IFS	Independent Front Suspension
IG	Ignition
IIA	Integrated Ignition Assembly
IN	Intake (Manifold, Valve)
INT	Intermittent
I/P	Instrument Panel
IRS	Independent Rear Suspension
J/B	Junction Block
J/C	Junction Connector
KD	Kick–Down
LAN	Local Area Network
LB	Liftback
LCD	Liquid Crystal Display
LED	Light Emitting Diode
LH	Left–Hand
LHD	Left–Hand Drive
L/H/W	Length, Height, Width
LLC	Long–Life Coolant
LNG	Liquified Natural Gas
LO	Low
LPG	Liquified Petroleum Gas
LSD	Limited Slip Differential
LSP & PV	Load Sensing Proportioning And Bypass Valve
LSPV	Load Sensing Proportioning Valve
MAX.	Maximum
MIC	Microphone
MIL	Malfunction Indicator Lamp
MIN.	Minimum
MP	Multipurpose
MPX	Multiplex Communication System
M/T	Manual Transmission
MT	Mount
MTG	Mounting
N	Neutral
NA	Natural Aspiration
No.	Number
O/D	Overdrive

OEM	Original Equipment Manufacturing
OHC	Overhead Camshaft
OHV	Overhead Valve
OPT	Option
O/S	Oversize
P & BV	Proportioning And Bypass Valve
PCS	Power Control System
PCV	Positive Crankcase Ventilation
PKB	Parking Brake
PPS	Progressive Power Steering
PS	Power Steering
PTO	Power Take–Off
R & P	Rack And Pinion
R/B	Relay Block
RBS	Recirculating Ball Type Steering
R/F	Reinforcement
RFS	Rigid Front Suspension
RH	Right–Hand
RHD	Right–Hand Drive
RLY	Relay
ROM	Read Only Memory
Rr	Rear
RR	Rear–Engine Rear–Wheel Drive
RRS	Rigid Rear Suspension
RWD	Rear–Wheel Drive
SDN	Sedan
SEN	Sensor
SICS	Starting Injection Control System
SOC	State Of Charge
SOHC	Single Overhead Camshaft
SPEC	Specification
SPI	Single Point Injection
SRS	Supplemental Restraint System
SSM	Special Service Materials
SST	Special Service Tools
STD	Standard
STJ	Cold–Start Fuel Injection
SW	Switch
SYS	System
T/A	Transaxle
TACH	Tachometer
TBI	Throttle Body Electronic Fuel Injection
TC	Turbocharger
TCCS	TOYOTA Computer–Controlled System
TCV	Timing Control Valve
TDC	Top Dead Center

TEMP.	Temperature
TEMS	TOYOTA Electronic Modulated Suspension
TIS	Total Information System For Vehicle Development
T/M	Transmission
TMC	TOYOTA Motor Corporation
TMMK	TOYOTA Motor Manufacturing Kentucky, Inc.
TRAC	Traction Control System
TURBO	Turbocharge
U/D	Underdrive
U/S	Undersize
VCV	Vacuum Control Valve
VENT	Ventilator
VIN	Vehicle Identification Number
VPS	Variable Power Steering
VSC	Vehicle Skid Control
VSV	Vacuum Switching Valve
VTV	Vacuum Transmitting Valve
w/	With
WGN	Wagon
W/H	Wire Harness
w/o	Without
1st	First
2nd	Second
2WD	Two Wheel Drive Vehicle (4x2)
4WD	Four Wheel Drive Vehicle (4x4)

IN04R–03

GLOSSARY OF SAE AND LEXUS TERMS

This glossary lists all SAE–J1930 terms and abbreviations used in this manual in compliance with SAE recommendations, as well as their LEXUS equivalents.

SAE ABBREVIATIONS	SAE TERMS	LEXUS TERMS ( )—ABBREVIATIONS
A/C	Air Conditioning	Air Conditioner
ACL	Air Cleaner	Air Cleaner
AIR	Secondary Air Injection	Air Injection (AI)
AP	Accelerator Pedal	–
B+	Battery Positive Voltage	+B, Battery Voltage
BARO	Barometric Pressure	–
CAC	Charge Air Cooler	Intercooler
CARB	Carburetor	Carburetor
CFI	Continuous Fuel Injection	–
CKP	Crankshaft Position	Crank Angle
CL	Closed Loop	Closed Loop
CMP	Camshaft Position	Cam Angle
CPP	Clutch Pedal Position	–
CTOX	Continuous Trap Oxidizer	–
CTP	Closed Throttle Position	–
DFI	Direct Fuel Injection (Diesel)	Direct Injection (DI)
DI	Distributor Ignition	–
DLC1 DLC2 DLC3	Data Link Connector 1 Data Link Connector 2 Data Link Connector 3	1: Check Connector 2: Total Diagnosis Comunication Link (TDCL) 3: OBD II Diagnostic Connector
DTC	Diagnostic Trouble Code	Diagnostic Code
DTM	Diagnostic Test Mode	–
ECL	Engine Control Level	–
ECM	Engine Control Module	Engine ECU (Electronic Control Unit)
ECT	Engine Coolant Temperature	Coolant Temperature, Water Temperature (THW)
EEPROM	Electrically Erasable Programmable Read Only Memory	Electrically Erasable Programmable Read Only Memory (EEPROM), Erasable Programmable Read Only Memory (EPROM)
EFE	Early Fuel Evaporation	Cold Mixture Heater (CMH), Heat Control Valve (HCV)
EGR	Exhaust Gas Recirculation	Exhaust Gas Recirculation (EGR)
EI	Electronic Ignition	Distributorless Ignition (DI)
EM	Engine Modification	Engine Modification (EM)
EPROM	Erasable Programmable Read Only Memory	Programmable Read Only Memory (PROM)
EVAP	Evaporative Emission	Evaporative Emission Control (EVAP)
FC	Fan Control	–
FEEPROM	Flash Electrically Erasable Programmable Read Only Memory	–
FEPROM	Flash Erasable Programmable Read Only Memory	–
FF	Flexible Fuel	–
FP	Fuel Pump	Fuel Pump
GEN	Generator	Alternator
GND	Ground	Ground (GND)

HO2S	Heated Oxygen Sensor	Heated Oxygen Sensor (HO2S)
IAC	Idle Air Control	Idle Speed Control (ISC)
IAT	Intake Air Temperature	Intake or Inlet Air Temperature
ICM	Ignition Control Module	–
IFI	Indirect Fuel Injection	Indirect Injection
IFS	Inertia Fuel–Shutoff	–
ISC	Idle Speed Control	–
KS	Knock Sensor	Knock Sensor
MAF	Mass Air Flow	Air Flow Meter
MAP	Manifold Absolute Pressure	Manifold Pressure Intake Vacuum
MC	Mixture Control	Electric Bleed Air Control Valve (EBCV) Mixture Control Valve (MCV) Electric Air Control Valve (EACV)
MDP	Manifold Differential Pressure	–
MFI	Multiport Fuel Injection	Electronic Fuel Injection (EFI)
MIL	Malfunction Indicator Lamp	Check Engine Light
MST	Manifold Surface Temperature	–
MVZ	Manifold Vacuum Zone	–
NVRAM	Non–Volatile Random Access Memory	–
O2S	Oxygen Sensor	Oxygen Sensor, O_2 Sensor (O_2S)
OBD	On–Board Diagnostic	On–Board Diagnostic (OBD)
OC	Oxidation Catalytic Converter	Oxidation Catalyst Converter (OC), CCo
OP	Open Loop	Open Loop
PAIR	Pulsed Secondary Air Injection	Air Suction (AS)
PCM	Powertrain Control Module	–
PNP	Park/Neutral Position	–
PROM	Programmable Read Only Memory	–
PSP	Power Steering Pressure	–
PTOX	Periodic Trap Oxidizer	Diesel Particulate Filter (DPF) Diesel Particulate Trap (DPT)
RAM	Random Access Memory	Random Access Memory (RAM)
RM	Relay Module	–
ROM	Read Only Memory	Read Only Memory (ROM)
RPM	Engine Speed	Engine Speed
SC	Supercharger	Supercharger
SCB	Supercharger Bypass	–
SFI	Sequential Multiport Fuel Injection	Electronic Fuel Injection (EFI), Sequential Injection
SPL	Smoke Puff Limiter	–
SRI	Service Reminder Indicator	–
SRT	System Readiness Test	–
ST	Scan Tool	–
TB	Throttle Body	Throttle Body
TBI	Throttle Body Fuel Injection	Single Point Injection Central Fuel Injection (Ci)
TC	Turbocharger	Turbocharger
TCC	Torque Converter Clutch	Torque Converter

TCM	Transmission Control Module	Transmission ECU (Electronic Control Unit)
TP	Throttle Position	Throttle Position
TR	Transmission Range	–
TVV	Thermal Vacuum Valve	Bimetallic Vacuum Switching Valve (BVSV) Thermostatic Vacuum Switching Valve (TVSV)
TWC	Three–Way Catalytic Converter	Three–Way Catalytic (TWC) CC_{RO}
TWC+OC	Three–Way + Oxidation Catalytic Converter	CC_R + CCo
VAF	Volume Air Flow	Air Flow Meter
VR	Voltage Regulator	Voltage Regulator
VSS	Vehicle Speed Sensor	Vehicle Speed Sensor (Read Switch Type)
WOT	Wide Open Throttle	Full Throttle
WU–OC	Warm Up Oxidation Catalytic Converter	–
WU–TWC	Warm Up Three–Way Catalytic Converter	Manifold Converter
3GR	Third Gear	–
4GR	Fourth Gear	–

OUTSIDE VEHICLE

MA02P–03

GENERAL MAINTENANCE

The owners are responsible for these maintenance and inspection items.
They can be done by the owner or they can have them done at a service shop.
These items include those which should be checked on a daily basis, those which, in most cases, do not require (special) tools and those which are considered to be reasonable for the owner to do.
Items and procedures for general maintenance are as follows.

1. GENERAL NOTES

- Maintenance items may vary from country to country. Check the owner's manual supplement in which the maintenance schedule is shown.
- Every service item in the periodic maintenance schedule must be performed.
- Periodic maintenance service must be performed according to whichever interval in the periodic maintenance schedule occurs first, the odometer reading (miles) or the time interval (months).
- Maintenance service after the last period should be performed at the same interval as before unless otherwise noted.
- Failure to do even one item can cause the engine to run poorly and increase exhaust emissions.

2. TIRES

(a) Check the pressure with a gauge. If necessary, adjust.
(b) Check for cuts, damage or excessive wear.

3. WHEEL NUTS

When checking the tires, check the nuts for looseness or for missing nuts. If necessary, tighten them.

4. TIRE ROTATION

Check the owner's manual supplement in which the maintenance schedule is shown.

5. WINDSHIELD WIPER BLADES

Check for wear or cracks whenever they do not wipe clean. If necessary, replace.

6. FLUID LEAKS

(a) Check underneath for leaking fuel, oil, water or other fluid.
(b) If you smell gasoline fumes or notice any leak, have the cause found and corrected.

7. DOORS AND ENGINE HOOD

(a) Check that all doors and the tailgate operate smoothly, and that all larches lock securely.
(b) Check that the engine hood secondary latch secures the hood from opening when the primary latch is released.

INSIDE VEHICLE

MA02Q–03

GENERAL MAINTENANCE

The owners are responsible for these maintenance and inspection items.
They can be done by the owner or they can have them done at a service shop.
These items include those which should be checked on a daily basis, those which, in most cases, do not require (special) tools and those which are considered to be reasonable for the owner to do.
Items and procedures for general maintenance are as follows.

1. GENERAL NOTES

- Maintenance items may vary from country to country. Check the owner's manual supplement in which the maintenance schedule is shown.
- Every service item in the periodic maintenance schedule must be performed.
- Periodic maintenance service must be performed according to whichever interval in the periodic maintenance schedule occurs first, the odometer reading (miles) or the time interval (months).
- Maintenance service after the last period should be performed at the same interval as before unless otherwise noted.
- Failure to do even one item can cause the engine to run poorly and increase exhaust emissions.

2. LIGHTS

(a) Check that the headlights, stop lights, taillights, turn signal lights, and other lights are all working.
(b) Check the headlight aiming.

3. WARNING LIGHTS AND BUZZERS

Check that all warning lights and buzzers function properly.

4. HORN

Check that it is working.

5. WINDSHIELD GLASS

Check for scratches, pits or abrasions.

6. WINDSHIELD WIPER AND WASHER

(a) Check operation of the wipers and washer.
(b) Check that the wipers do not streak.

7. WINDSHIELD DEFROSTER

Check that air comes out from the defroster outlet when operating the heater or air conditioner at defroster mode.

8. REAR VIEW MIRROR

Check that it is mounted securely.

9. SUN VISORS

Check that they move freely and mounted securely.

10. STEELING WHEEL

Check that it has the specified freeplay. Be alert for changes in steering condition, such as hard steering, excessive freeplay or strange noises.

11. SEATS

(a) Check that all front seat controls such as seat adjusters, seatback recliner, etc. operate smoothly.
(b) Check that all latches lock securely in any position.
(c) Check that the head restraints move up and down smoothly and that the locks hold securely in any latch position.
(d) For folding–down rear seat backs, check that the latches look securely.

12. SEAT BELTS

(a) Check that the seat belt system such as buckles, retractors and anchors operate properly and smoothly.
(b) Check that the belt webbing is not cut, frayed, worn or damaged.

13. ACCELERATOR PEDAL

Check the pedal for smooth operation and uneven pedal effort or catching.

14. BRAKE PEDAL (See page BR–6)

(a) Check that pedal for smoothly operation.

(b) Check that the pedal has the proper reserve distance and freeplay.

15. BRAKES

At a safe place, check that the brakes do not pull to one side when applied.

16. PARKING BRAKE (See page BR–8)

(a) Check that the lever has the proper travel.

(b) On a safe incline, check that the vehicle is held securely with only the parking brake applied.

17. AUTOMATIC TRANSMISSION ”PARK” MECHANISM

(a) Check the lock release button of the selector level for proper and smooth operation.

(b) On a safe incline, check that the vehicle is held securely with the selector lever in the ”P” position and all brakes released.

UNDER HOOD

MA02R–03

GENERAL MAINTENANCE

1. GENERAL NOTES

- Maintenance items may vary from country to country. Check the owner's manual supplement in which the maintenance schedule is shown.
- Every service item in the periodic maintenance schedule must be performed.
- Periodic maintenance service must be performed according to whichever interval in the periodic maintenance schedule occurs first, the odometer reading (miles) or the time interval (months).
- Maintenance service after the last period should be performed at the same interval as before unless otherwise noted.
- Failure to do even one item can cause the engine to run poorly and increase exhaust emissions.

2. WINDSHIELD WASHER FLUID

Check that there is sufficient fluid in the tank.

3. ENGINE COOLANT LEVEL

Check that the coolant level is between the LEVEL lines on the see–through reservoir.

4. RADIATOR AND HOSES

(a) Check that the front of the radiator is clean and not blocked with leaves, dirt or bugs.
(b) Check the hoses for cracks, kinks, rot or loose connections.

5. BATTERY ELECTROLYTE LEVEL

Check the indicator.
When the indicator color is blue, the condition is satisfactory. A red color indicates that distilled water must be added, and white indicates that charging is necessary.

6. BRAKE FLUID LEVEL

Check that the brake fluid level is near the upper level line on the see–through reservoir.

7. ENGINE DRIVE BELTS

Check drive belt for fraying, cracks, wear or oiliness.

8. ENGINE OIL LEVEL

Check the level on the dipstick with the engine turned off.

9. POWER STEERING FLUID LEVEL

Check the level on the dipstick.
The level should be in the "HOT" or "COLD" range depending on the fluid temperature.

10. AUTOMATIC TRANSMISSION FLUID LEVEL

(a) Park the vehicle on a level surface.
(b) With the engine idling and the parking and foot brake applied, shift the selector into all positions from "P" to "L", and then shift into "P".
(c) Pull out the dipstick and wipe off the fluid with a clean rag. Re–insert the dipstick fully and check that the fluid level is in the HOT range.
(d) Do this check with the fluid at normal driving temperature (70 – 80˚C (158 – 176˚F)).

If the level is at the low side, add fluid.

NOTICE:

Do not overfill.

HINT:
Wait about 30 minutes before checking the fluid level after extended driving at high speeds in hot weather, driving in heavy traffic or with a trailer.

11. EXHAUST SYSTEM

Visually inspect for cracks, holes or loose supports.
If any change in the sound of the exhaust or smell of the exhaust fumes is noticed, have the cause located and corrected.

ENGINE

MA044–01

INSPECTION

HINT:

Inspect these items when the engine is cold.

1. **INSPECT DRIVE BELT (See page CH–1)**
2. **REPLACE SPARK PLUGS (See page IG–1)**

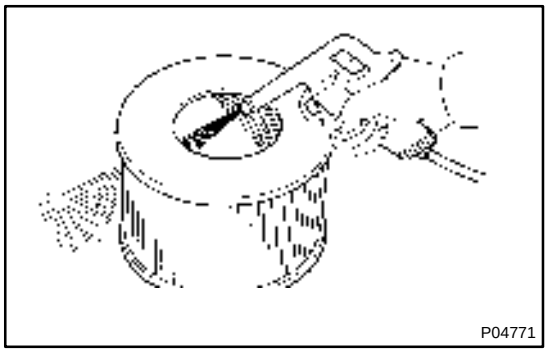

3. **INSPECT AIR FILTER**

(a) Visually check that the air cleaner element is not excessively dirty, damaged or oily.

If necessary, replace the air cleaner element.

(b) Clean the element with compressed air. First blow from the inside thoroughly, then blow off the outside of the element.

4. **REPLACE AIR CLEANER FILTER**

Replace the air cleaner filter with a new one.

5. **INSPECT VALVE CLEARANCE (See page EM–4)**
6. **REPLACE ENGINE OIL AND OIL FILTER (See page LU–2)**
7. **REPLACE ENGINE COOLANT (See page CO–2)**
8. **INSPECT EXHAUST PIPES AND MOUNTINGS**

Visually inspect the pipes, hangers and connections for severe corrosion, leaks or damage.

9. **INSPECT FUEL LINES, CONNECTIONS VALVE (See page EC–6)**

Visually inspect the fuel lines for cracks, leakage loose connections, deformation or tank band looseness.

10. **INSPECT GASKET IN FUEL TANK CAP (See page EC–6)**
11. **INSPECT CHARCOAL CANISTER (See page EC–6)**

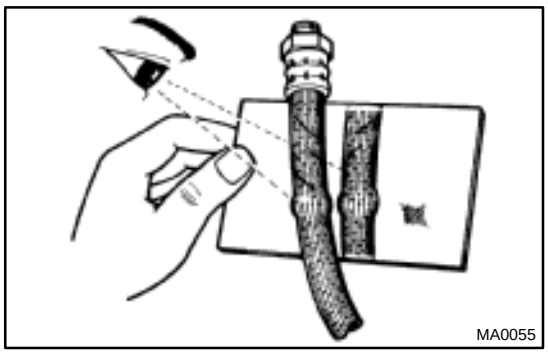

BRAKE

MA02T–05

INSPECTION

1. INSPECT BRAKE LINE PIPES AND HOSES

HINT:

Check in a well lighted area. Check the entire circumference and length of the brake hoses using a mirror as required. Turn the front wheels fully right or left before checking the front brake.

(a) Check all brake lines and hoses.
- Check for damage.
- Check for wear.
- Check for deformation.
- Check for cracks.
- Check for corrosion.
- Check for leaks.
- Check for bends.
- Check for twists.

(b) Check all clamps for tightness and connections for leakage.

(c) Check that the hoses and lines are clear of sharp edges, moving parts and the exhaust system.

(d) Check that the lines installed in grommets pass through the center of the grommets.

2. INSPECT FRONT BRAKE PADS AND DISCS (See page BR–24)

3. INSPECT REAR BRAKE PADS AND DISCS (See page BR–33)

4. INSPECT PARKING BRAKE LININGS AND DRUMS (See page BR–39)

5. INSPECT OR CHANGE BRAKE FLUID

(a) Visually inspect the master cylinder for leaks.

(b) Change the brake fluid (See page BR–4).

CHASSIS

MA045–01

INSPECTION

1. INSPECT STEERING LINKAGE

(a) Check the steering wheel freeplay (See page SR–7).

(b) Check the steering linkage for looseness or damage.

- Check that the tie rod ends do not have excessive play.
- Check that the dust seals and boots are not damaged.

(c) Inspect the dust cover for damage.

2. INSPECT SRS AIRBAG
(See pages RS–9 and RS–23)

3. INSPECT STEERING GEAR HOUSING OIL

Check the steering gear housing for oil leakage.
If leakage is found, check for cause and repair.

4. INSPECT AUTOMATIC TRANSMISSION OIL LEVEL (See page DI–122)

5. INSPECT TRANSFER AND DIFFERENTIAL (FRONT AND REAR) OIL LEVELS

Remove the filler plug and feel inside the hole with your finger. Check that the oil comes to within 5 mm (0.20 in.) of the bottom edge of the hole.
If the level is low, add oil until it begins to run out of the filler hole.

Transfer oil: See page PP–40
Differential oil (Front and rear): See page PP–50

6. REPLACE AUTOMATIC TRANSMISSION FLUID (See page DI–3)

7. REPLACE TRANSFER AND DIFFERENTIAL OIL

(a) Remove the drain plug and drain the oil.

(b) Reinstall the drain plug securely.

(c) Add new oil until it begins to run out of the filler hole.

Transfer oil: See page PP–40
Differential oil (Front and rear): See page PP–50

8. REPACK FRONT WHEEL BEARINGS
(See page SA–10)

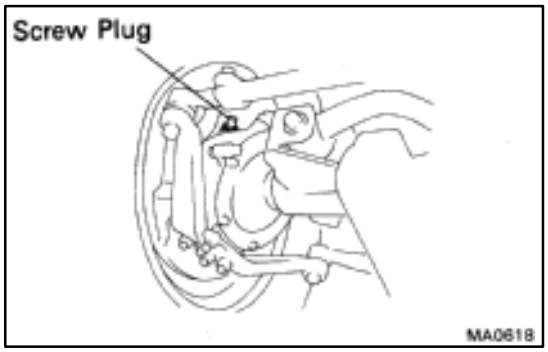

9. LUBE STEERING KNUCKLE CHASSIS AND PROPELLER SHAFT

(a) Remove the screw plug from each steering knuckle and repack with lubricant.

Steering knuckle grease:
Molybdenum disulfide lithium base chassis grease (NLGI No. 2)

(b) Reinstall the 2 screw plugs.

(c) Lubricate chassis components, referring to the lubrication chart. Before pumping in grease, wipe off any mud and dust on the grease fitting.
Grease grade:
Lithium base chassis grease (NLGI No. 2)

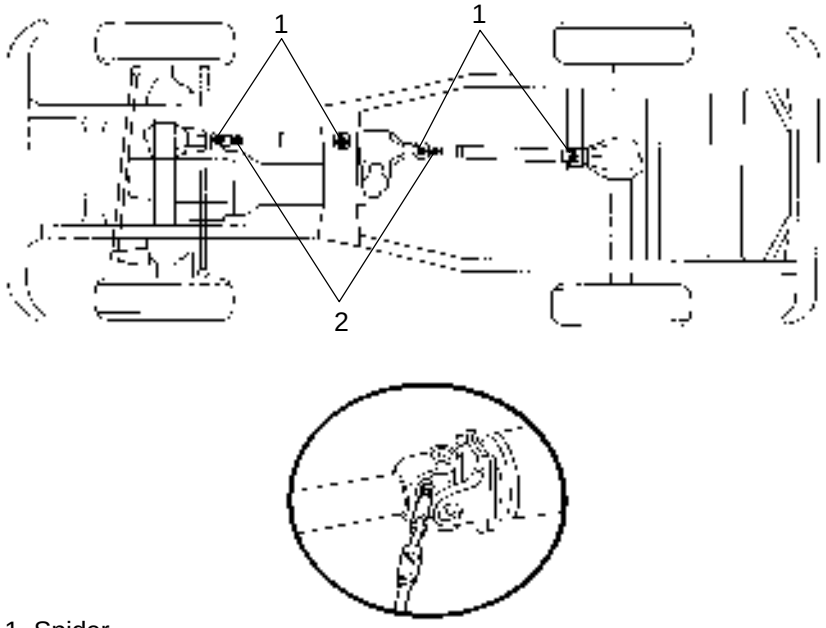

Lubricating Positions: 1. Spider
2. Slide Yoke

MA0621

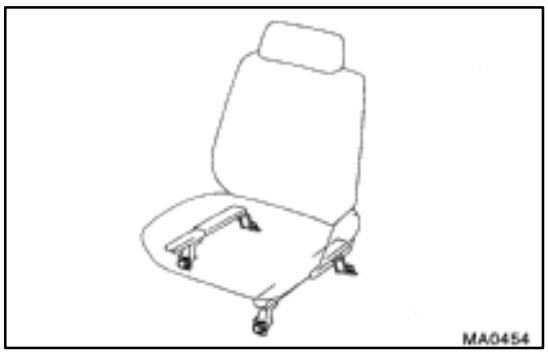

BODY

MA046–01

INSPECTION

1. TIGHTEN BOLTS AND NUTS ON CHASSIS AND BODY

(a) Tighten the following parts:
- Front seats mounting bolts

Torque: 39 N·m (400 kgf·cm, 29 ft·lbf)

(b) In addtion to the scheduled maintenance items, check for loose or missing bolts and nuts of the steering system, drive train, suspension system, fuel tank mounting, engine mounting, etc.

2. BODY INSPECTION

(a) Check the body exterior for dents, scratches and rust.

(b) Check the underbody for rust and damage.

3. ROAD TEST

(a) Check the engine and chassis for abnormal noises.

(b) Check that the vehicle does not wander or pull to one side.

(c) Check that the brakes work properly and do not drag.

4. FINAL INSPECTION

(a) Check the operation of the body parts:
- Hood:
  Auxiliary catch operates properly
  Hood locks securely when closed
- Front and rear doors:
  Door locks operate properly
  Doors close properly
- Back door:
  Door lock operates properly
- Seats:
  Seat adjusts easily and locks securely in any position
  Front seat back locks securely in any position
  Folding–down rear seat backs look securely

(b) Be sure to deliver a clean car.
Especially check the steering wheel, shift lever knob, all switch knobs, door handles and seats.

MAINTENANCE

EQUIPMENT

PP2ZZ–01

Mirror	Brake hose
Torque wrench	

ENGINE MECHANICAL

SST (Special Service Tools)

PP38Q–01

	09201–10000	Valve Guide Bushing Remover & Replacer Set	
	(09201–01070)	Valve Guide Bushing Remover & Replacer 7	
	09202–70020	Valve Spring Compressor	
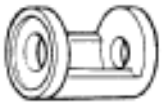	(09202–00010)	Attachment	
	09213–58012	Crankshaft Pulley Holding Tool	
	(90201–08131)	Washer	
	(91111–50845)	Bolt	
	09223–15030	Oil Seal & Bearing Replacer	Crankshaft rear oil seal
	09236–00101	Water Pump Overhaul Tool Set	
	(09236–15010)	Bearing Stay	Valve stem oil seal
	09248–06020	Valve Lifter Stopper	
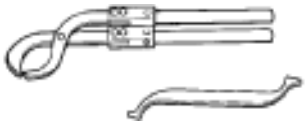	09248–55050	Valve Clearance Adjust Tool Set	

	(09248–05510)	Valve Lifter Press	
	09316–60011	Transmission & Transfer Bearing Replacer	
	(09316–00011)	Replacer Pipe	Crankshaft front oil seal
	(09316–00051)	Replacer ”D”	Crankshaft front oil seal
	09330–00021	Companion Flange Holding Tool	Crankshaft pulley
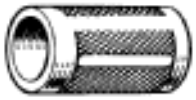	09636–20010	Upper Ball Joint Dust Cover Replacer	Crankshaft timing gear
	09843–18020	Diagnosis Check Wire	
	09950–40011	Puller B Set	
	(09951–04010)	Hanger 150	Crankshaft timing gear
	(09952–04010)	Slide Arm	Crankshaft timing gear
	(09953–04020)	Center Bolt 150	Crankshaft timing gear
	(09954–04010)	Arm 25	Crankshaft timing gear
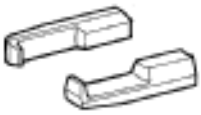	(09955–04061)	Claw No.6	Crankshaft timing gear

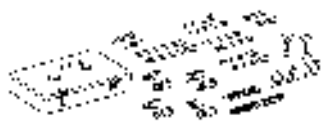	09950–50012	Puller C Set	
	(09951–05010)	Hanger 150	Crankshaft pulley
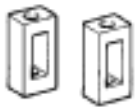	(09952–05010)	Slide Arm	Crankshaft pulley
	(09953–05010)	Center Bolt 100	Crankshaft pulley
	(09953–05020)	Center Bolt 150	Crankshaft pulley
	(09954–05020)	Claw No.2	Crankshaft pulley
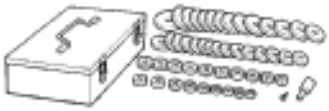	09950–60010	Replacer Set	
	(09951–00250)	Replacer 25	Spark plug tube gasket
	(09951–00260)	Replacer 26	Connecting rod bushing
	(09951–00280)	Replacer 28	Connecting rod bushing
	(09951–00350)	Replacer 35	Crankshaft timing gear
	(09951–00480)	Replacer 48	Spark plug tube gasket
	(09952–06010)	Adapter	Connecting rod bushing Spark plug tube gasket

	09950–70010	Handle Set	
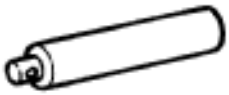	(09951–07100)	Handle 100	Valve guide bushing Connecting rod bushing Spark plug tube gasket
	(09951–07150)	Handle 150	Crankshaft rear oil seal

PP38R–01

RECOMMENDED TOOLS

	09040–00011	Hexagon Wrench Set .	Chain tensioner sliper
	09082–00040	TOYOTA Electrical Tester.	
	09090–04020	Engine Sling Device	
	09200–00010	Engine Adjust Kit .	
	09258–00030	Hose Plug Set .	Plug for the vacuum hose, fuel hose etc.
	09904–00010	Expander Set .	Camshaft sub–gear

PP302–02

EQUIPMENT

Abrasive compound	Valve
Caliper gauge	
CO/HC meter	
Compression gauge	
Connecting rod aligner	
Cylinder gauge	
Dial indicator	
Dye penetrant	
Engine tune–up tester	
Groove cleaning tool	Piston ring groove
Heater	
Magnetic finger	
Micrometer	
OBD II scan tool	Engine speed
Pin hole grinder	Connecting rod bushing
Piston ring compressor	
Piston ring expander	
Plastigage	
Precision straight edge	
Ridge reamer	Cylinder
Soft brush	
Spring tester	Valve spring
Steel square	Valve spring
Thermometer	
Torque wrench	
Valve seat cutter	
V–block	
Vernier calipers	
Wire brush	Valve

PP34N–01

SSM (Special Service Materials)

08826–00080	Seal Packing Black or equivalent (FIPG)	Cylinder head Semi–circular plug Timing chain cover Rear oil seal retainer
08833–00070	Adhesive 1324, THREE BOND 1324 or equivalent	Spark plug tube

EMISSION CONTROL

PP304–02

SST (Special Service Tools)

09843–18020 Diagnosis Check Wire	

PP305–01

RECOMMENDED TOOLS

	09082–00040 TOYOTA Electrical Tester.	

PP306–01

EQUIPMENT

Heater	TVV
OBD II scan tool	Engine speed
Thermometer	TVV
Torque wrench	
Vacuum gauge	

PP307–01

SSM (Special Service Materials)

08833–00070	Adhesive 1324, THREE BOND 1324 or equivalent	TVV

SFI

SST (Special Service Tools)

PP38S–01

	09268–41047	Injection Measuring Tool Set	
	(09268–41091)	NO.7 Union	
	(90405–09015)	No.1 Union	
	09268–45012	EFI Fuel Pressure Gauge	
	(09268–41190)	Adapter	
	(90405–06167)	I Union	
	09631–22020	Power Steering Hose Nut 14 x 17 mm Wrench Set	Fuel line flare nut
	09816–30010	Oil Pressure Switch Socket	Knock sensor
	09842–30070	Wiring ”F” EFI Inspection	

PP309–01

RECOMMENDED TOOLS

	09082–00040	TOYOTA Electrical Tester.	
	09200–00010	Engine Adjust Kit .	
	09258–00030	Hose Plug Set .	Plug for vacuum hose, fuel hose, etc.

PP30A–01

EQUIPMENT

Carburetor cleaner	Throttle body
Graduated cylinder	Injector
OBD II scan tool	Engine speed
Soft brush	Throttle body
Sound scope	Injector
Torque wrench	

COOLING

PP30B–02

EQUIPMENT

Heater	Thermostat
Radiator cap tester	
Thermometer	Thermostat
Torque wrench	

PP30C–02

COOLANT

Item	Capacity	Classification
Engine coolant		Ethylene–glycol base
w/ Front heater	12.5 liters (13.2 US qts, 11.0 Imp. qts)	
w/ Front heater and rear heaters	13.4 liters (14.2 US qts, 11.8 Imp qts)	

LUBRICATION

SST (Special Service Tools)

PP30D–03

	09032–00100 Oil Pan Seal Cutter	
	09228–44011 Oil Filter Wrench	

PP30E–01

RECOMMENDED TOOLS

	09200–00010 Engine Adjust Kit .	

PP30F–01

EQUIPMENT

Oil pressure gauge	
Precision straight edge	Oil pump
Torque wrench	

PP30G–02

LUBRICANT

Item		Capacity	Classification
Engine oil			API grade SH, Energy–Conserving II multigrade engine oil or ILSAC multigrade engine oil and recommended viscosity oil, with SAE 5W–30 being preferred engine oil
Dry fill		8.0 liters (8.5 US qts, 7.0 Imp. qts)	
Drain and refill	w/ Oil filter change	7.4 liters (7.8 US qts, 6.5 Imp. qts)	
	w/o Oil filter change	6.9 liters (7.3 US qts, 6.1 Imp qts)	

PP30H–02

SSM (Special Service Materials)

08826–00080	Seal Packing Black or equivalent (FIPG)	Oil pump No. 1 Oil pan No. 2 Oil pan
08833–00080	Adhesive 1344 THREE BOND 1344 LOCTITE 242 or equivalent	Oil pressure switch

IGNITION

RECOMMENDED TOOLS

PP30I–02

	09082–00040 TOYOTA Electrical Tester Set.	
	09200–00010 Engine Adjust Kit .	

PP30J–01

EQUIPMENT

Spark plug cleaner	
Torque wrench	

STARTING

SST (Special Service Tools)

PP30K–02

	09286–46011	Injection Pump Spline Shaft Puller	Armature bearing
	09810–38140	Starter Magnet Switch Nut Wrench 14	Terminal nut
	09820–00030	Alternator Rear Bearing Replacer	Armature rear bearing

PP30L–01

RECOMMENDED TOOLS

	09082–00040 TOYOTA Electrical Tester.	

PP30M–02

EQUIPMENT

Dial indicator	Commutator
Magnetic finger	Steel ball
Press	Magnetic switch terminal kit
Pull scale	Brush spring
Sandpaper	Commutator
Torque wrench	
V–block	Commutator
Vernier calipers	Commutator, Brush

CHARGING

PP30N–02

SST (Special Service Tools)

	09285–76010	Injection Pump Camshaft Bearing Cone Replacer	Rotor rear bearing cover
	09286–46011	Injection Pump Spline Shaft Puller	Rectifier end frame
	09820–00021	Alternator Rear Bearing Puller	
	09820–00030	Alternator Rear Bearing Replacer	
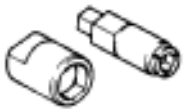	09820–63010	Alternator Pulley Set Nut Wrench Set	
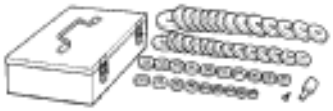	09950–60010	Replacer Set	
	(09951–00260)	Replacer 26	Rotor front bearing
	(09951–00500)	Replacer 50	Rotor front bearing
	(09952–06010)	Adapter	Rotor front bearing

PP30O–01

RECOMMENDED TOOLS

	09082–00040 TOYOTA Electrical Tester.	

PP30P–02

EQUIPMENT

Belt tension gauge	
Torque wrench	
Vernier calipers	Rotor (Slip ring), Brush

AUTOMATIC TRANSMISSION

PP38T–01

SST (Special Service Tools)

	09032–00100	Oil Pan Seal Cutter	
	09201–10000	Valve Guide Bushing Remover & Replacer Set	Speedometer driven gear oil seal
	(09201–01080)	Valve Guide Bushing Remover & Replacer 8	
	09350–30020	TOYOTA Automatic Transmission Tool Set	
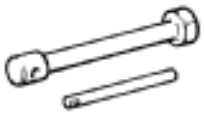	(09351–32010)	One–way Clutch Test Tool	
	(09351–32020)	Stator Stopper	
	09921–00010	Spring Tension Tool	Speedometer driven gear oil seal
	09992–00095	Automatic Transmission Oil Pressure Gauge Set	

PP318–01

RECOMMENDED TOOLS

	09082–00040 TOYOTA Electrical Tester.	

PP319–01

EQUIPMENT

Dial indicator with magnetic base	Drive plate runout
OBD II scan tool	
Straight edge	Torque converter clutch
Torque wrench	
Vernier Calipers	Torque converter clutch

PP31A–02

LUBRICANT

Item	Capacity	Classification
Automatic transmission fluid		ATF D–II or DEXRON®II
Dry fill	11.7 liters (12.4 US qts, 10.3 Imp qts)	
Drain and refill	2.0 liters (2.1 US qts, 1.8 Imp qts)	

PP38U–01

SSM (Special Service Materials)

08826–00090	Seal Packing 1281, THREE BOND 1281 or equivalent (FIPG)	Oil pan
08833–00080	Adhesive 1344 THREE BOND 1344 LOCTITE 242 or equivalent	Extension housing

TRANSFER

SST (Special Service Tools)

PP38V–01

	09223–00010	Cover & Seal Replacer	Center differential
	09223–15020	Oil Seal & Bearing Replacer	Front extension housing
	09316–12010	Transfer Bearing Replacer	Center differential
	09316–20011	Transfer Bearing Replacer	Component parts removal and installation Front extension housing Rear extension housing
	09316–60011	Transmission & Transfer Bearing Replacer	
	(09316–00011)	Replacer Pipe	Component parts removal and installation Front extension housing Rear extension housing Center differential Idler gear
	(09316–00021)	Replacer ”A”	Rear extension housing
	(09316–00031)	Replacer ”B”	Front extension housing Rear extension housing Component parts removal and installation Input shaft
	(09316–00041)	Replacer ”C”	Component parts removal and installation Front extension housing Rear extension housing
	(09316–00061)	Replacer ”E”	Front extension housing
	(09316–00071)	Replacer ”F”	Idler gear, Front extension housing
	09325–12010	Transmission Oil Plug	Rear extension housing

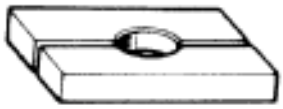	09527–30010	Rear Axle Shaft Bearing Remover	Input shaft
	09608–00081	Differential Side Bearing Cone Replacer	Component parts removal and installation
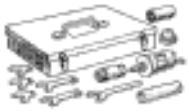	09612–24014	Steering Gear Housing Overhaul Tool Set	Center differential
	(09612–10050)	Steering Rack Shaft Bushing Replacer	
	09950–00020	Bearing Remover	Idler gear Front extension housing Center differential
	09950–00030	Bearing Remover Attachment	Center differential
	09950–40011	Puller B Set	Component parts removal and installation Front extension housing
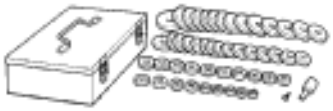	09950–60010	Replacer Set	
	(09951–00320)	Replacer 32	Component parts removal and installation Center differential
	(09951–00400)	Replacer 40	Center differential
	09950–70010	Handle Set	Component parts removal and installation Front extension housing Center differential
	(09951–07150)	Handle 150	

PP31D–01

RECOMMENDED TOOLS

	09031–00030	Pin Punch .	
	09040–00010	Hexagon Wrench Set .	
	09042–00010	Torx Socket T30 .	
	09042–00020	Torx Socket T40 .	
	09082–00040	TOYOTA Electrical Tester.	
	09905–00012	Snap Ring No.1 Expander .	

PP31E–01

EQUIPMENT

Dial indicator	
Feeler gauge	
Magnetic finger	
Straight edge	
Torque wrench	
Vernier calipers	

PP31F–01

LUBRICANT

Item	Capacity	Classification
Transfer oil	1.7 liters (1.8 US qts, 1.5 Imp. qts)	API GL–4 or GL–5 SAE 75W–90

PP31G–02

SSM (Special Service Materials)

08826–00090	Seal Packing 1281, THREE BOND 1281 or equivalent (FIPG)	Front case x Rear case Rear case x Case cover Case x Extension housing
08833–00070	Adhesive 1324, THREE BOND 1324 or equivalent	Dynamic damper set bolt
08833–00080	Adhesive 1344 THREE BOND 1344 LOCTITE 242 or equivalent	Straight screw plug Case cover set bolt

PROPELLER SHAFT

SST (Special Service Tools)

PP31H–01

	09332–25010	Universal Joint Bearing Remover & Replacer	Spider bearing

PP31I–02

EQUIPMENT

Torque wrench	

SUSPENSION AND AXLE

SST (Special Service Tools)

PP38W–01

	09214–76011	Crankshaft Pulley Replacer	Front differential Rear differential
	09223–15020	Oil Seal & Bearing Replacer	Front differential Rear axle
	09226–10010	Crankshaft Front & Rear Bearing Replacer	Rear suspension
	09308–00010	Oil Seal Puller	Front axle Front differential Rear axle Rear differential
	09308–10010	Oil Seal Puller	Front differential Rear differential
	09315–00022	Clutch Release Bearing Remover & Replacer	Rear differential
	09316–20011	Transfer Bearing Replacer	Rear suspension
	09316–60011	Transmission & Transfer Bearing Replacer	Front differential Rear differential
	(09316–00011)	Replacer Pipe	
	(09316–00021)	Replacer ”A”	
	(09316–00051)	Replacer ”D”	
	09330–00021	Companion Flange Holding Tool	Front differential Rear differential

	09504–00011	Differential Side Bearing Adjusting Nut Wrench	Front differential Rear differential
	09504–22011	Differential Side Bearing Replacer	Rear differential
	09506–35010	Differential Drive Pinion Rear Bearing Replacer	Rear differential Rear suspension
	09509–25011	Rear Axle Bearing Lock Nut Wrench	Rear axle
	09517–36010	Rear Axle Shaft Oil Seal Replacer–	Rear axle
	09550–60010	Differential Side Bearing Replacer	Rear differential
	09556–22010	Drive Pinion Front Bearing Remover	Front differential Rear differential
	09605–60010	Steering Knuckle Bearing Cup Replacer–	Front axle
	09606–60020	Steering Knuckle Bearing Remover	Front axle
	09607–60020	Front Wheel Adjusting Nut Wrench	Front axle
	09611–22012	Tie Rod End Puller	Front axle
	09612–65014	Steering Worm Bearing Puller	Front axle
	(09612–01010)	Claw ”A”	

	(09612–01050)	Hanger Pin with Nut	
	09618–60010	Front Axle & Drive Shaft Bearing Replacer	Front axle
	09710–22021	Front Suspension Bushing Tool Set	Rear suspension
	(09710–01071)	Lower Arm Bushing Remover	
	09710–22042	Rear Suspension Bushing Tool Set	Front suspension
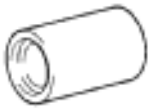	(09710–02051)	Base	
	(09710–02061)	Replacer	
	(09710–02071)	Bushing Remover & Replacer	
	09710–30050	Suspension Arm Bushing Replacer	Front suspension
	09726–40010	Lower Control Shaft Bearing Replacer	Front differential Rear differential
	09727–30021	Coil Spring Compressor	Front suspension
	09950–00020	Bearing Remover	Front differential Rear differential
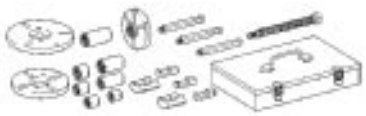	09950–30011	Puller A Set	Front differential Rear differential

	09950–40011	Puller B Set	Front differential Rear differential
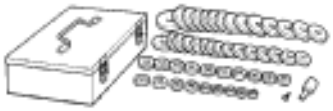	09950–60010	Replacer Set	Front differential Rear differential Rear suspension
	09950–60020	Replacer Set No.2	Front axle Rear axle Rear differential
	09950–70010	Handle Set	Front axle Front suspension Rear axle Rear differential Rear suspension

PP38X–01

RECOMMENDED TOOLS

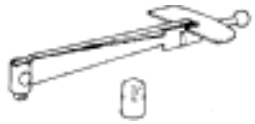	09025–00010	Torque Wrench (30 kgf–cm)	
	09031–00030	Pin Punch .	
	09040–00011	Hexagon Wrench Set .	
	(09043–20060)	Socket Hexagon Wrench 6.	
	09044–00020	Torx Socket E10 .	
	09082–00040	TOYOTA Electrical Tester.	
	09905–00012	Snap Ring No.1 Expander .	
	09905–00013	Snap Ring Pliers .	

PP31L–01

EQUIPMENT

Dial indicator	
Feeler gauge	
Micrometer	
Spring tension gauge	
Torque wrench	

PP31M–01

LUBRICANT

Item		Capacity	Classification
Front differential oil	w/o Dfferential lock	2.80 liters (2.9 US qts, 2.5 Imp.qts)	Hypoid gear oil API GL–5 Above –18˚C (0˚F) SAE 90 Below –18˚C (0˚F) SAE 80W–90 or 80W
	w/ Dfferential lock	2.65 liters (2.8 US qts, 2.3 Imp.qts)	
Rear differential oii		3.25 liters (3.4 US qts, 2.9 Imp.qts)	

PP38Y–01

SSM (Special Service Materials)

08826–00090	Seal Packing 1281, THREE BOND 1281 or equivalent (FIPG)	Front differential Rear differential Differential locking system
08833–00070	Adhesive 1324, THREE BOND 1324 or equivalent	Rear differential Differential locking system
08833–00080	Adhesive 1344 THREE BOND 1344 LOCTITE 242 or equivalent	Front differential

BRAKE

SST (Special Service Tools)

PP38Z–01

	09023–00100	Union Nut Wrench 10 mm	
	09709–29018	LSPV Gauge Set	
	09717–20010	Brake Shoe Return Spring Remover	
	09718–20010	Brake Shoe Return Spring Replacer	
	09737–00010	Brake Booster Push Rod Gauge	
	09751–36011	Brake Line Union Nut 10 x 12 mm Wrench	
	09843–18020	Diagnosis Check Wire	
	09990–00150	ABS Actuator Checker and Sub–harness	
	09990–00200	ABS Actuator Checker Sub–harness ”C”	
	09990–00210	ABS Actuator Checker Sub–harness ”E”	

PP31P–01

RECOMMENDED TOOLS

	09082–00040 TOYOTA Electrical Tester.	
	09905–00013 Snap Ring Pliers .	

PP31Q–01

EQUIPMENT

Dial indicator	Brake disc
Micrometer	Brake disc
Torque wrench	
Vernier calipers	Brake disc

PP31R–01

LUBRICANT

Item	Capacity	Classification
Brake fluid	–	SAE J1703 or FMVSS No. 116 DOT 3

STEERING

SST (Special Service Tools)

PP390–01

	09527–10011	Rear Axle Shaft Bearing Remover	PS vane pump
	09610–55012	Pitman Arm Puller	Steering linkage
	09611–22012	Tie Rod End Puller	Steering linkage
	09616–00011	Steering Worm Bearing Adjusting Socket	PS gear
	09628–62011	Ball Joint Puller	Steering linkage
	09630–00014	Power Steering Gear Housing Overhaul Tool Set	
	(09631–00051)	No.3 Wrench	PS gear
	(09631–00121)	Teflon Ring Former	PS gear
	(09631–00142)	Overhaul Stand	PS gear
	09631–10030	Oil Seal Remover	PS vane pump
	09631–22020	Power Steering Hose Nut 14 x 17 mm Wrench Set	PS gear
	09640–10010	Power Steering Pressure Gauge Set	

	(09641–01010)	Gauge Assy	On–vehicle inspection
	(09641–01030)	Attachment B	On–vehicle inspection
	(09641–01060)	Attachment E	On–vehicle inspection
	09910–00015	Puller Set	
	(09911–00011)	Puller Clamp	Tilt steering column
	(09912–00010)	Puller Slide Hammer	Tilt steering column
	09950–40011	Puller B Set	
	(09957–04010)	Attachment	Tilt steering column
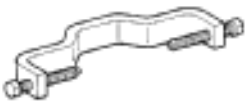	(09958–04011)	Holder	Tilt steering column
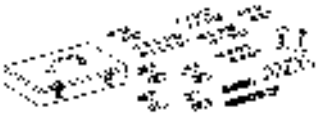	09950–50012	Puller C Set	
	(09951–05010)	Hanger 150	Tilt steering column
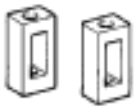	(09952–05010)	Slide Arm	Tilt steering column
	(09953–05020)	Center Bolt 150	Tilt steering column

	(09954–05020)	Claw No.2	Tilt steering column
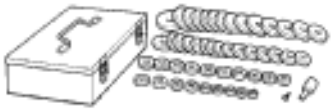	09950–60010	Replacer Set	
	(09951–00360)	Replacer 36	PS gear
	(09951–00410)	Replacer 41	PS gear
	(09952–06010)	Adapter	PS gear
	09950–70010	Handle Set	
	(09951–07200)	Handle 200	PS gear

PP391–01

RECOMMENDED TOOLS

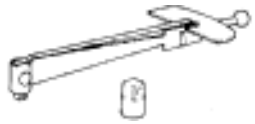	09025–00010	Torque Wrench (30 kgf–cm)	PS vane pump PS gear
	09042–00010	Torx Socket T30 .	Tilt steering column
	09904–00010	Expander Set .	
	(09904–00050)	No. 4 Claw	
	09905–00012	Snap Ring No.1 Expander .	
	09905–00013	Snap Ring Pliers .	

PP31U–01

EQUIPMENT

Caliper gauge	PS vane pump
Calipers	PS vane pump
Dial indicator	PS gear
Feeler gauge	PS vane pump
Micrometer	PS vane pump
Torque wrench	

PP31V–01

LUBRICANT

Item		Capacity	Classification
Power steering fluid	Total	0.8 liters (0.9 US qts, 0.7 Imp.qts)	ATF DEXRON® II or III

SUPPLEMENTAL RESTRAINT SYSTEM

PP31W–02

SST (Special Service Tools)

	09082–00700 SRS Airbag Deployment Tool	
	09843–18020 Diagnosis Check Wire	

PP31X–02

RECOMMENDED TOOLS

	09042–00020	Torx Socket T40 .	Airbag sensor assembly
	09082–00040	TOYOTA Electrical Tester.	

PP31Y–01

EQUIPMENT

Torque wrench	
Bolt Length: 35 mm (1.38 in.) Pitch: 1.0 mm (0.039 in.) Diam.: 6.0 mm (0.236 in.)	Airbag disposal
Tire Width: 185 mm (7.28 in.) Inner diam.: 360 mm (14.17 in.)	Airbag disposal
Tire with disc wheel Width: 185 mm (7.28 in.) Inner diam.: 360 mm (14.17 in.)	Airbag disposal
Vinyl bag	Airbag disposal

BODY ELECTRICAL

PP31Z–01

SST (Special Service Tools)

09843–18020 Diagnosis Check Wire	

PP320–01

RECOMMENDED TOOLS

	09082–00040 TOYOTA Electrical Tester.	

PP321–01

EQUIPMENT

Bulb (3.4 W)	Fuel sender gauge, Seat belt warning relay
Bulb (21 W)	Turn signal flasher relay
Clip remover	For removing cowl louver
Dry cell battery	Fuel sender gauge
Masking tape	Rear window defogger wire
Oil bath	Engine oil level warning switch
Test lead	
Thermometer	Engine coolant temperature sender gauge Engine oil level warning switch
Tin foil	Rear window defogger wire
Torque wrench	

PP392–01

SSM (Special Service Materials)

08833–00070	Adhesive 1324, THREE BOND 1324 or equivalent	Power seat housing set nut Power seat slide and vertical motor set screw
08833–00080	Adhesive 1344 THREE BOND 1344 LOCTITE 242 or equivalent	Low oil pressure warning switch Engine coolant temp. sender gauge
08888–88888	DuPont Paste No. 4817 or equivalent	Rear window defogger wire

BODY

SST (Special Service Tools)

PP323–01

	09806–30010 Windshield Moulding Remover	
	09812–00010 Door Hinge Set Bolt Wrench	

PP324–01

LUBRICANT

Item	Capacity	Classification
MP grease	–	–

PP325–02

SSM (Special Service Materials)

08833–00030	Three cement black or equivalent	Back door glass
08833–00070	Adhesive 1324, THREE BOND 1324 or equivalent	Front door Rear door power seat retainer

AIR CONDITIONING

SST (Special Service Tools)

PP393–01

	07110–58060	Air Conditioner Service Tool Set	
	(07117–58060)	Refrigerant Drain Service Valve	
	(07117–58070)	T–Joint	
	(07117–58080)	Quick Disconnect Adapter	Discharge (Diam.: 16 mm)
	(07117–58090)	Quick Disconnect Adapter	Suction (Diam.: 13 mm)
	(07117–78050)	Refrigerant Charging Gauge	
	(07117–88060)	Refrigerant Charging Hose	Discharge (Color: Red)
	(07117–88070)	Refrigerant Charging Hose	Suction (Color: Blue)
	(07117–88080)	Refrigerant Charging Hose	Utility (Color: Green)
	07112–66040	Magnetic Clutch Remover	
	07112–76060	Magnetic Clutch Stopper	
	07114–84010	Snap Ring Pliers	

	07114–84020	Snap Ring Pliers	
	07116–38360	Gas Leak Detector Assembly	

PP327–01

RECOMMENDED TOOLS

	09082–00040 TOYOTA Electrical Tester.	

PP329–01

LUBRICANT

Item	Capacity	Classification
Compressor oil		ND–OIL 8 or equivalent
When replacing receiver	10 cc (0.35 fl. oz.)	
When replacing condenser	40 cc (1.4 fl. oz.)	
When replacing evaporator	40 cc (1.4 fl. oz.)	
When replacing compressor	120 cc (4.1 fl. oz.)	

STANDARD BOLT

HOW TO DETERMINE BOLT STRENGTH

SS00F–01

	Mark	Class
Hexagon head bolt	Bolt head No. 4– 5– 6– 7– 8– 9– 10– 11–	4T 5T 6T 7T 8T 9T 10T 11T
	No mark	4T
Hexagon flange bolt w/ washer hexagon bolt	No mark	4T
Hexagon head bolt	2 Protruding lines	5T
Hexagon flange bolt w/ washer hexagon bolt	2 Protruding lines	6T
Hexagon head bolt	3 Protruding lines	7T
Hexagon head bolt	4 Protruding lines	8T

	Mark	Class
Hexagon flange bolt w/ washer hexagon bolt	4 Protruding lines	9T
Hexagon flange bolt w/ washer hexagon bolt	5 Protruding lines	10T
Hexagon flange bolt w/ washer hexagon bolt	6 Protruding lines	11T
Stud bolt	No mark	4T
	Grooved	6T
Welded bolt		4T

V06821

SS00G–01

SPECIFIED TORQUE FOR STANDARD BOLTS

Class	Diameter mm	Pitch mm	Specified torque						
			Hexagon head bolt				Hexagon flange bolt			
			N·m	kgf·cm	ft·lbf		N·m	kgf·cm	ft·lbf	
4T	6	1	5	55	48	in.·lbf	6	60	52	in.·lbf
	8	1.25	12.5	130	9		14	145	10	
	10	1.25	26	260	19		29	290	21	
	12	1.25	47	480	35		53	540	39	
	14	1.5	74	760	55		84	850	61	
	16	1.5	115	1,150	83		–	–	–	
5T	6	1	6.5	65	56	in.·lbf	7.5	75	65	in.·lbf
	8	1.25	15.5	160	12		17.5	175	13	
	10	1.25	32	330	24		36	360	26	
	12	1.25	59	600	43		65	670	48	
	14	1.5	91	930	67		100	1,050	76	
	16	1.5	140	1,400	101		–	–	–	
6T	6	1	8	80	69	in.·lbf	9	90	78	in.·lbf
	8	1.25	19	195	14		21	210	15	
	10	1.25	39	400	29		44	440	32	
	12	1.25	71	730	53		80	810	59	
	14	1.5	110	1,100	80		125	1,250	90	
	16	1.5	170	1,750	127		–	–	–	
7T	6	1	10.5	110	8		12	120	9	
	8	1.25	25	260	19		28	290	21	
	10	1.25	52	530	38		58	590	43	
	12	1.25	95	970	70		105	1,050	76	
	14	1.5	145	1,500	108		165	1,700	123	
	16	1.5	230	2,300	166		–	–	–	
8T	8	1.25	29	300	22		33	330	24	
	10	1.25	61	620	45		68	690	50	
	12	1.25	110	1,100	80		120	1,250	90	
9T	8	1.25	34	340	25		37	380	27	
	10	1.25	70	710	51		78	790	57	
	12	1.25	125	1,300	94		140	1,450	105	
10T	8	1.25	38	390	28		42	430	31	
	10	1.25	78	800	58		88	890	64	
	12	1.25	140	1,450	105		155	1,600	116	
11T	8	1.25	42	430	31		47	480	35	
	10	1.25	87	890	64		97	990	72	
	12	1.25	155	1,600	116		175	1,800	130	

V00079

MAINTENANCE

TORQUE SPECIFICATION

SS1EN–01

Part tightened	N·m	kgf·cm	ft·lbf
Front seat mounting bolt	39	400	29

ENGINE MECHANICAL

SERVICE DATA

SS1EO–03

Compression pressure	at 250 rpm STD	1,176 kPa (12.0 kgf/cm^2, 171 psi) or more
	Minimum	883 kPa (9.0 kgf/cm^2, 128 psi)
	Difference of pressure between each cylinder	98 kPa (1.0 kgf/cm^2, 14 psi) or less
Valve clearance	at cold Intake	0.15 – 0.25 mm (0.006 – 0.010 in.)
	Exhaust	0.25 – 0.35 mm (0.010 – 0.014 in.)
Ignition timing	w/ Terminals TE1 and E1 connected	3˚ BTDC @ idle
Idle speed	–	650 ± 50 rpm
Intake manifold vacuum	at idle speed	63 kPa (473 mmHg, 18.6 in.Hg)
Cylinder head	Warpage	
	Cylinder block side Maximum	0.15 mm (0.0059 in.)
	Manifold side Maximum	0.10 mm (0.0039 in.)
	Valve seat	
	Refacing angle Intake	30˚, 45˚, 75˚
	Exhaust	45˚, 75˚
	Contacting angle	45˚
	Contacting width Intake	1.2 – 1.6 mm (0.047 – 0.063 in.)
	Exhaust	1.0 – 1.4 mm (0.039 – 0.055 in.)
	Cylinder head bolt outside diameter STD	10.85 – 11.00 mm (04272 – 0.4331 in.)
	minimum	10.6 mm (0.417 in.)
Valve guide bushing	Inside diameter	7.010 – 7.030 mm (0.2760 – 0.2768 in.)
	Outside diameter (for repair part) STD	11.540 – 11.551 mm (0.4543 – 0.4548 in.)
	O/S 0.05	11.590 – 11.601 mm (0.4563 – 0.4567 in.)
Valve	Valve overall length STD Intake	98.2 – 98.6 mm (3.866 – 3.882 in.)
	Exhaust	97.7 – 98.1 mm (3.846 – 3.862 in.)
	Minimum Intake	97.9 mm (3.854 in.)
	Exhaust	97.4 mm (3.835 in.)
	Valve face angle	44.5˚
	Stem diameter Intake	6.970 – 6.985 mm (0.2744 – 0.2750 in.)
	Exhaust	6.965 – 6.980 mm (0.2742 – 0.2748 in.)
	Stem oil clearance STD Intake	0.025 – 0.060 mm (0.0010 – 0.0024 in.)
	Exhaust	0.030 – 0.065 mm (0.0012 – 0.0026 in.)
	Maximum Intake	0.08 mm (0.0031 in.)
	Exhaust	0.10 mm (0.0039 in.)
	Margin thickness STD	1.2 mm (0.047 in.)
	Minimum	1.0 mm (0.039 in.)
Valve spring	Deviation Maximum	2.0 mm (0.079 in.)
	Free length	43.94 – 45.06 mm (1.7299 – 1.7740 in.)
	Installed tension at 36.5 mm (1.437 in.)	214 – 238 N (21.8 – 24.2 kgf, 48.1 – 53.4 lbf)
Valve lifter	Lifter diameter	33.966 – 33.976 mm (1.3372 – 1.3376 in.)
	Lifter bore diameter	34.000 – 34.021 mm (1.3386 – 1.3394 in.)
	Oil clearance STD	0.024 – 0.055 mm (0.0009 – 0.0022 in.)
	Maximum	0.07 mm (0.0028 in.)
Manifold	Warpage Maximum	0.30 mm (0.0118 in.)
Air intake chamber	Warpage Maximum	0.30 mm (0.0118 in.)

Camshaft	Thrust clearance	STD	0.030 – 0.080 mm (0.0012 – 0.0031 in.)
		Maximum	0.10 mm (0.0039 in.)
	Journal oil clearance	STD	0.025 – 0.062 mm (0.0010 – 0.0024 in.)
		Maximum	0.10 mm (0.0039 in.)
	Journal diameter		26.959 – 26.975 mm (1.0614 – 1.0620 in.)
	Circle runout	Maximum	0.06 mm (0.0024 in.)
	Cam lobe height	STD	50.61 – 50.71 mm (1.9925 – 1.9965 in.)
		Minimum	50.51 mm (1.9886 in.)
	Camshaft gear backlash	STD	0.020 – 0.200 mm (0.0008 – 0.0079 in.)
		Maximum	0.30 mm (0.0188 in.)
	Camshaft gear spring end free distance		18.2 – 18.8 mm (0.717 – 0.740 in.)
Oil pump drive shaft gear	Thrust clearance	STD	0.040 – 0.160 mm (0.0016 – 0.0063 in.)
		Maximum	0.30 mm (0.0188 in.)
Chain and timing gear	Chain length at 16 links	Maximum	146.6 mm (5.772 in.)
	Camshaft timing gear wear	Minimum	126.0 mm (4.961 in.)
	Crankshaft timing gear wear	Minimum	65.4 mm (2.575 in.)
Chain tensioner slipper and vibration damper	Wear	Maximum	1.0 mm (0.039 in.)
Cylinder block	Cylinder head surface warpage	Maximum	0.05 mm (0.0020 in.)
	Cylinder bore diameter	STD Mark 1	100.000 – 100.010 mm (3.9370 – 3.9374 in.)
		Mark 2	100.010 – 100.020 mm (3.9374 – 3.9378 in.)
		Mark 3	100.020 – 100.030 mm (3.9378 – 3.9382 in.)
		Maximum STD	100.23 mm (3.9461 in.)
		O/S 0.50	100.73 mm (3.9658 in.)
		O/S 1.00	101.23 mm (3.9854 in.)
	Main bearing bolt thread outside diameter	STD	10.85 – 11.00 mm (0.4271 – 0.4331 in.)
		Minimum	10.6 mm (0.417 in.)
Piston and piston ring	Piston diameter	STD Mark 1	99.950 – 99.960 mm (3.9350 – 3.9354 in.)
		Mark 2	99.960 – 99.970 mm (3.9354 – 3.9358 in.)
		Mark 3	99.970 – 99.980 mm (3.9358 – 3.9362 in.)
		O/S 0.50	100.450 – 100.480 mm (3.9547 – 3.9559 in.)
		O/S 1.0	100.950 – 100.980 mm (3.9744 – 3.9756 in.)
	Piston oil clearance	STD	0.040 – 0.060 mm (0.0016 – 0.0024 in.)
		Maximum	0080 mm (0.0031 in.)
	Piston ring groove clearance	No. 1	0.040 – 0.080 mm (0.0016 – 0.0031 in.)
		No. 2	0.030 – 0.070 mm (0.0012 – 0.0028 in.)
	Piston ring end gap	STD No. 1	0.300 – 0.520 mm (0.0118 – 0.0205 in.)
		No. 2	0.450 – 0.670 mm (0.0177 – 0.0264 in.)
		Oil	0.150 – 0.520 mm (0.0059 – 0.0205 in.)
		Maximum No. 1	1.12 mm (0.0441 in.)
		No. 2	1.17 mm (0.0461 in.)
		Oil	1.12 mm (0.0441 in.)

Connecting rod	Thrust clearance STD	0.160 – 0.262 mm (0.0063 – 0.0103 in.)
	Maximum	0.362 mm (0.0143 in.)
	Connecting rod bearing center wall thickness (Reference)	
	STD Mark 2	1.744 – 1.747 mm (0.0687 – 0.0688 in.)
	Mark 3	1.747 – 1.750 mm (0.0688 – 0.0689 in.)
	Mark 4	1.750 – 1.753 mm (0.0689 – 0.0690 in.)
	Mark 5	1.753 – 1.756 mm (0.0690 – 0.0691 in.)
	Mark 6	1.756 – 1.759 mm (0.0691 – 0.0693 in.)
	Connecting rod oil clearance STD STD	0.032 – 0.050 mm (0.0013 – 0.0020 in.)
	U/S 0.25	0.033 – 0.073 mm (0.0013 – 0.0029 in.)
	Maximum	0.10 mm (0.0039 in.)
	Rod bend Maximum per 100 mm (3.94 in.)	0.05 mm (0.0020 in.)
	Rod twist Maximum per 100 mm (3.94 in.)	0.15 mm (0.0059 in.)
	Bushing inside diameter	26.008 – 26.020 mm (1.0239 – 1.0244 in.)
	Piston pin diameter	26.000 – 22.012 mm (1.0236 – 1.0241 in.)
	Piston pin oil clearance STD	0.004 – 0.012 mm (0.0002 – 0.0005 in)
	Maximum	0.05 mm (0.0020 in.)
	Connecting rod bolt outside diameter STD	8.40 – 8.60 mm (0.3307 – 0.3386 in.)
	Minimum	8.00 mm (0.3150 in.)
Crankshaft	Thrust clearance STD	0.020 – 0.220 mm (0.0008 – 0.0087 in.)
	Maximum	0.30 mm (0.0118 in.)
	Thrust washer thickness STD	2.440 – 2.490 mm (0.0961 – 0.0980 in.)
	O/S 0.125	2.503 – 2.553 mm (0.0985 – 0.1005 in.)
	O/S 0.250	2.565 – 2.615 mm (0.1010 – 0.1030 in.)
	Main journal oil clearance STD STD	0.042 – 0.060 mm (0.0017 – 0.0024 in.)
	U/S 0.25	0.041 – 0.081 mm (0.0016 – 0.0032 in.)
	Maximum	0.10 mm (0.0039 in.)
	Main journal diameter STD	68.982 – 69.000 mm (2.7158 – 2.7165 in.)
	U/S 0.25	68.745 – 68.755 mm (2.7065 – 2.7069 in.)
	Main bearing center wall thickness (Reference)	
	STD Mark 2	2.489 – 2.492 mm (0.0980 – 0.0981 in.)
	Mark 3	2.492 – 2.495 mm (0.0981 – 0.0982 in.)
	Mark 4	2.495 – 2.498 mm (0.0982 – 0.0983 in.)
	Mark 5	2.498 – 2.501 mm (0.0983 – 0.0985 in.)
	Mark 6	2.501 – 2.504 mm (0.0985 – 0.0986 in.)
	Crank pin diameter STD	56.982 – 57.000 mm (2.2434 – 2.2441 in.)
	U/S 0.25	56.745 – 56.755 mm (2.2341 – 2.2344 in.)
	Circle runout Maximum	0.06 mm (0.0024 in.)
	Main journal taper and out–of–round Maximum	0.02 mm (0.0008 in.)
	Crank pin taper and out–of–round Maximum	0.02 mm (0.0008 in.)

SS1EP–02

TORQUE SPECIFICATION

Part tightened		N·m	kgf·cm	ft·lbf
Distributor x Cylinder head		18	180	13
No. 1 engine hanger, No.2 engine hanger x Cylinder head		41	420	30
Air intake chamber, Heater inlet pipe x Intake manifold		21	210	15
Intake manifold, EGR pipe, Water outlet x Cylinder head		21	210	15
EGR pipe x EGR valve		78	800	58
Generator bracket x Cylinder head		43	440	32
Cylinder head x Cylinder block	1st 2nd 3rd	39 Turn 90° Turn 90°	400 Turn 90° Turn 90°	29 Turn 90° Turn 90°
Cylinder head x Timing chain cover		21	210	15
Camshaft bearing cap x Cylinder head		16	160	12
Camshaft timing gear x Camshaft		74	750	54
Chain tensioner, Water bypass pipe x Cylinder head		21	210	15
Cylinder head cover x Cylinder head		12	120	9
Heater pipe x Timing chain cover		21	210	15
Heater pipe x Cylinder head		20	200	14
No. 1 exhaust manifold, No. 2 exhaust manifold x Cylinder head		39	400	29
No. 2 water bypass pipe x Cylinder head, No. 1 engine hanger		20	200	14
Fuel inlert hose x Fuel filter		29	300	22
Intake manifold stay x Air intake chamber, Cylinder head		36	360	26
Oil dipstick guide x Intake manifold, No. 1 oil pan		20	200	14
PS reservoir x Air intake chamber		20	200	14
Oil jet, Chain vibration damper x Cylinder block		20	200	14
Chain tensioner slipper x Cylinder block		69	700	51
Timing chain cover x Cylinder block		21	210	15
Drive belt idler pulley x Timing chain cover		43	440	32
Crankshaft pulley x Crankshaft		412	4,200	304
Cylinder block oil orifice x Cylinder block		7.8	80	69 in.·lbf
Main bearing cap x Cylinder block	1st 2nd	74 Turn 90°	750 Turn 90°	54 Turn 90°
Connecting rod cap x Connecting rod	1st 2nd	48 Turn 90°	490 Turn 90°	35 Turn 90°
Rear oil seal retainer x Cylinder block		21	210	15
LH front engine mounting bracket x Exhaust manifold		69	700	51
RH front engine mounting bracket x Exhaust manifold		69	700	51
PS pump x Cylinder block		36	370	27
Oil filter union x Cylinder block		44	450	33
Drive plate x Crankshaft		100	1,000	74
Transmission x Cylinder block, No.1 oil pan		72	730	53
Torque converter clutch x Drive plate		55	550	41
A/T oil cooler pipe x Union on transmission		34	350	25
Starter x Transmission		39	400	29
Frame crossmember x Frame		61	620	45
Frame crossmember x Engine rear mounting insulator		74	750	54

LH front engine mounting insulator x Exhaust manifold	74	750	54
RH front engine mounting insulator x Exhaust manifold	74	750	54
Transfer shift lever x Transmission	18	185	13
Transmission shift lever assembly x Body	5.4	55	48 in.·lbf
Transmission control rod x Control shaft lever	13	130	9
Stabillizer bar bracket x Stabilizer bar link	18	185	13
Stabillizer bar x Axle carrier	25	260	19
PS pressure hose x PS pump	56	575	42
Radiator pipe x No. 1 oil pan	21	210	15
A/C compressor bracket x No.1 oil pan, Cylinder block	37	375	27
A/C compressor x A/C compressor bracket	25	250	18
Heated oxygen sensor (Bank 1 Sensor 1) x Front exhaust pipe	20	200	14
Heated oxygen sensor (Bank 1 Sensor 2) x Center pipe	20	200	14
Front exhaust pipe x Exhaust manifold	63	630	46
Front exhaust pipe x Rear TWC	46	470	34
Rear TWC, Tailpipe x Center pipe	40	400	29
No. 1 exhaust pipe bracket x Transmission	24	240	17
No. 1 exhaust pipe bracket x Front exhaust pipe	19.5	195	14
No. 2 exhaust pipe support bracket x Frame	18.5	185	13
No. 3 exhaust pipe support bracket x Frame	18.5	185	13
No. 4 exhaust pipe support bracket x Frame	18.5	185	13
Exhaust pipe damper x Tailpipe	19.5	195	14

EMISSION CONTROL

SS1EQ–02

SERVICE DATA

VSV for EVAP	Resistance	at 20˚C (68˚F)	30 – 34 Ω

SS1ER–02

TORQUE SPECIFICATION

Part tightened		N·m	kgf·cm	ft·lbf
Charcoal canister x Charcoal canister bracket		14	145	10
Charcoal canister bracket x Body		18	185	13
TVV x Cylinder head		29	300	22
Intake manifold stay x Air intake chamber, Cylinder block		36	360	26
EGR valve x Air intake chamber	for stud bolt	9	90	78 in.·lbf
EGR valve x Air intake chamber	for nut	18	180	13
EGR valve x EGR pipe		64	650	47
EGR vacuum modulator x EGR valve		18	185	13
Heated oxygen sensor (Bank 1 Sensor 1) x Front exhaust pipe		20	200	14
Front exhaust pipe x Exhaust manifold		63	630	46
Front exhaust pipe x Rear TWC		46	470	34
Rear TWC x Center pipe		40	400	29
No. 1 exhaust pipe support bracket x Transmission		24	240	17
No. 1 exhaust pipe support bracket x Front exhaust pipe		19.5	195	14

SFI

SS1ES–02

SERVICE DATA

Fuel pressure regulator	Fuel pressure at no vacuum	265 – 304 kPa (2.7 – 3.1 kgf/cm^2, 38 – 44 psi)
Fuel pump	Resistance at 20˚C (68˚F)	0.2 – 3.0 Ω
Injector	Resistance at 20˚C (68˚F) Injection volume Difference between each cylinder Fuel leakage	13.4 – 14.2 Ω 69 – 88 cm^3 (4.2 – 5.4 cu in.) per 15 seconds 5 cm^3 (0.3 cu in.) or less 1 drop or less per 12 minutes
MAF meter	Resistance (THA – E2) at –20˚C (–4˚F) at 0˚C (32˚F) at 20˚C (68˚F) at 40˚C (104˚F) at 60˚C (140˚F) at 80˚C (176˚F)	10 – 20 kΩ 4 – 7 kΩ 2 – 3 kΩ 0.9 – 1.3 kΩ 0.4 – 0.7 kΩ 0.2 – 0.4 kΩ
Throttle body	Throttle body fully closed angle Dashpot setting speed Throttle opener setting speed	6˚ 2,200 ± 300 rpm 700 – 1,000 rpm
Throttle position sensor	Clearance between stop screw and lever Terminal 0 mm (0 in.) VTA – E2 0.50 mm (0.020 in.) IDL – E2 0.75 mm (0.030 in.) IDL – E2 Throttle valve fully open VTA – E2 – VC – E2	Resistance 0.2 – 5.7 kΩ 2.3 kΩ or less Infinity 2.0 – 10.2 kΩ 2.5 – 5.9 kΩ
IAC valve	Resistance (B1 – S1 and S3, B2 – S2 and S4) at cold at hot	15 – 25 Ω 20 – 30 Ω
Fuel pump resister	Resistance at 20˚C (68˚F)	0.70 – 0.76 Ω
VSV for fuel pressure control	Resistance at 20˚C (68˚F)	37 – 44 Ω
ECT sensor	Resistance at –20˚C (–4˚F) 0˚C (32˚F) 20˚C (68˚F) 40˚C (104˚F) 60˚C (140˚F) 80˚C (176˚F)	10 – 20 kΩ 4 – 7 kΩ 2 – 3 kΩ 0.9 – 1.3 kΩ 0.4 – 0.7 kΩ 0.2 – 0.4 kΩ
EGR gas temperature sensor	Resistance at 50˚C (122˚F) at 100˚C (212˚F) 150˚C (302˚F)	64 – 97 kΩ 11 – 16 kΩ 2 – 4 kΩ
Heated oxygen sensor (bank 1 sensor 1, 2)	Heater coil resistance at 20˚C (68˚F)	11 – 16 Ω
Fuel cut rpm	Fuel return rpm	1,200 rpm

SS1ET–03

TORQUE SPECIFICATION

Part tightened		N·m	kgf·cm	ft·lbf
Fuel line	for union bolt	29	300	22
	for flare nut	30	310	22
Fuel pump bracket x Fuel tank		3.9	40	35 in.·lbf
Fuel inlet hose, Fuel inlet pipe x Fuel filter		29	300	22
Fuel filter x Intake manifold		21	210	15
Fuel pressure regulator x Delivery pipe		25	250	18
Delivery pipe x Intake manifold		21	210	15
Fuel inlet pipe x Delivery pipe	Union bolt	29	300	22
	Bolt	20	200	14
Fuel return pipe x Intake manifold		20	200	14
Air intake chamber x Intake manifold		21	210	15
Intake manifold stay x Air intake chamber, Cylinder block		36	360	26
PS reservoir x Air intake chamber		18	185	13
Heater inlet pipe x Air intake chamber		20	200	14
Drain plug x Fuel tank		6.5	65	57 in.·lbf
Fuel tank breather tube x Fuel tank		1.5	15	13 in.·lbf
Fuel tank filler pipe x Fuel tank		3.5	35	31 in.·lbf
Fuel tank band x Body		39	400	29
MAF meter x Air cleaner cap, Bracket		6.9	70	61 in.·lbf
Throttle body x Air intake chamber		21	210	15
Fuel pump resistor x Body		18	185	13
ECT sensor x Cylinder head		24.5	250	18
EGR gas temperature sensor x Air intake chamber		20	200	14
Knock sensor 1, 2 x Cylinder block		44	450	33
Heated oxygen sensor (Bank 1 Sensor 1) x Front exhaust pipe		20	200	14
Heated oxygen sensor (Bank 1 Sensor 2) x Center pipe		20	200	14

COOLING

SS1EU–03

SERVICE DATA

Thermostat	Valve opening temperature Valve lift at 95˚C (203˚F)	80 – 84˚C (176 – 183˚F) 10 mm (0.39 in.) or more
Radiator cap	Relief valve opening pressure STD Minimum	74 – 103 kPa (0.75 – 1.05 kgf/cm^2, 10.7 – 14.9 psi) 59 kPa (0.6 kgf/cm^2, 8.5 psi)

SS1EV–03

TORQUE SPECIFICATION

Part tightened		N·m	kgf·cm	ft·lbf
Coolant drain plug x Cylinder block		29	300	22
Water pump x Cylinder block		21	210	15
Fan shroud x Radiator		5.0	50	43 in.·lbf
Water inlet x Water inlet housing		21	210	15
Radiator x Bracket		12	120	9
Radiator x Body	Bolt	18	185	13
	Nut	12	120	9

LUBRICATION

SS1EW–02

SERVICE DATA

Oil pressure		at idle speed	29 kPa (0.3 kgf/cm^2, 4.3 psi) or more
		at 3,000 rpm	245 – 490 kPa (2.5 – 5.0 kgf/cm^2, 36 – 71 psi)
Oil pump	Body clearance	STD	0.100 – 0.170 mm (0.0039 – 0.0067 in.)
		Maximum	0.30 mm (0.0118 in.)
	Side clearance	STD	0.030 – 0.090 mm (0.0012 – 0.0035 in.)
		Maximum	0.15 mm (0.0059 in.)
	Tip clearance	STD	0.030 – 0.160 mm (0.0012 – 0.0063 in.)
		Maximum	0.25 mm (0.098 in.)

SS1EX–03

TORQUE SPECIFICATION

Part tightened		N·m	kgf·cm	ft·lbf
Engine oil drain plug x Oil pan		25	250	18
Relief valve plug x Oil pump body (timing chain cover)		49	500	36
Oil strainer x No. 1 oil pan		20	200	14
Baffle plate x No. 1 oil pan		9.0	90	78 in.·lbf
No.1 oil pan x Cylinder block	12 mm head	20	200	14
	14 mm head	44	440	32
No. 1 oil pan x Oil pump (Timing chain cover)		20	200	14
No. 2 oil pan x No. 1 oil pan	Bolt	7.8	80	69 in.·lbf
	Nut	8.8	90	78 in.·lbf
No. 1 oil pan x Transmission housing		72	730	53
Oil level sensor x No. 1 oil pan		5.4	55	48 in.·lbf
Relief valve plug x Oil cooler cover		37	375	27
Oil cooler x Oil cooler cover		17	170	12
Oil cooler cover x Cylinder block		21	210	15
No. 1 exhaust manifold x Cylinder head		39	400	29
Oil check valve x Cylinder block		25	250	18

IGNITION

SERVICE DATA

SS1EY–02

Firing order	–		1 – 5 – 3 – 6 – 2 – 4
High–tension cord	Resistance	Maximum	25 kΩ per cord
Spark plug	Recommended spark plug	DENSO made	K16R–U
		NGK made	BKR5EYA
	Correct electrode gap		0.8 mm (0.031 in.)
Ignition coil	Primary coil resistance	at cold	0.36 – 0.55 Ω
		at hot	0.45 – 0.65 Ω
	Secondary coil resistance	at cold	9.0 – 15.4 kΩ
		at hot	11.4 – 18.1 kΩ
Distributor	Air gap		0.2 – 0.4 mm (0.008 – 0.016 in.)
	Pickup coil resistance	at cold G1 – G–	185 – 275 Ω
		G2 – G–	185 – 275 Ω
		(NE – G–	185 – 275 Ω
		at hot G1 – G–	240 – 325 Ω
		G2 – G–	240 – 325 Ω
		NE – G–	240 – 325 Ω
Crankshaft position sensor	Resistance	at cold NE+ – NE–	1,630 – 2,740 Ω
		at hot NE+ – NE–	2,065 – 3,225 Ω

SS1EZ–02

TORQUE SPECIFICATION

Part tightened	N·m	kgf·cm	ft·lbf
Spark plug x Cylinder head	20	200	14
Distributor x Cylinder head	18	180	13
Crankshaft position sensor x No. 1 oil pan	9	90	78 in.·lbf
Crankshaft position sensor protector x No. 1 oil pan	20	200	14

STARTING

SERVICE DATA

SS1F0–03

Starter (1.4 kW type)	Rated voltage and output power		12 V 1.4 kW
	No–load characteristics	Current	90 A or less at 11.5 V
		rpm	3,000 rpm or less
	Brush length	STD	15.5 mm (0.610 in.)
		Minimum	10.0 mm (0.394 in.)
	Spring installed load	STD	17.6 – 23.5 N (1.8 – 2.4 kgf, 4.0 – 5.3 lbf)
		Minimum	11.8 N (1.2 kgf, 2.7 lbf)
	Commutator		
	Diameter	STD	30.0 mm (1.181 in.)
		Minimum	29.0 mm (1.142 in.)
	Undercut depth	STD	0.6 mm (0.024 in.)
		Minimum	0.2 mm (0.008 in.)
	Circle runout	Maximum	0.05 mm (0.0020 in.)
	Magnetic switch		
	Contact plate for wear	Maximum	0.9 mm (0.035 in.)
Starter (2.0 kW type)	Rated voltage and output power		12 V 2.0 kW
	No–load characteristics	Current	100 A or less at 11.5 V
		rpm	2,000 rpm or less
	Brush length	STD	15.0 mm (0.591 in.)
		Minimum	9.0 mm (0.354 in.)
	Spring installed load	STD	21.5 – 27.5 N (2.2 – 2.8 kgf, 4.9 – 6.2 lbf)
		Minimum	12.7 N (1.3 kgf, 2.9 lbf)
	Commutator		
	Diameter	STD	35.0 mm (1.378 in.)
		Minimum	34.0 mm (1.339 in.)
	Undercut depth	STD	0.7 mm (0.028 in.)
		Minimum	0.2 mm (0.008 in.)
	Circle runout	Maximum	0.05 mm (0.0020 in.)
	Field frame		
	Shunt coil resistance	at 20˚C (68˚F)	1.5 –1.9 Ω
	Magnetic switch		
	Contact plate for wear	Maximum	0.9 mm (0.035 in.)

SS1F1–03

TORQUE SPECIFICATION

Part tightened		N·m	kgf·cm	ft·lbf
Terminal 30 nut, Terminal C nut x Terminal bolt		17	173	13
End cover x Magnetic switching housing	1.4 kW type	2.5	25	22 in.·lbf
	2.0 kW type	3.6	37	32 in.·lbf
End cover x Bush holder	1.4 kW type	1.5	15	13 in.·lbf
	2.0 kW type	3.8	39	34 in.·lbf
Starter hosing x Magnetic switch	1.4 kW type	5.9	60	52 in.·lbf
	2.0 kW type	9.3	95	82 in.·lbf
End cover x Starter housing	1.4 kW type	5.9	60	52 in.·lbf
	2.0 kW type	9.3	95	82 in.·lbf
Lead wire of field frame x Terminal C		5.9	60	52 in.·lbf
Starter x Transmission		39	400	29
Starter wire x Starter		8.8	90	78 in.·lbf

CHARGING

SS1F2–03

SERVICE DATA

Battery	Specific gravity (Except maintenance–free battery)		
		at 20˚C (68˚F)	1.25 – 1.29
	Voltage (Maintenance–free battery)	at 20˚C (68˚F)	12.5 – 12.9 V
Drive belt	Tension	New belt	100 – 150 lbf
		Used belt	60 – 100 lbf
Generator	Rated output		12 V 80 A
	Rotor coil resistance	at 20˚C (68˚F)	2.8 – 3.0 Ω
	Slip ring diameter	STD	14.2 – 14.4 mm (0.559 – 0.567 in.)
		Minimum	12.8 mm (0.504 in.)
	Brush exposed length	STD	9.5 – 11.5 mm (0.374 – 0.453 in.)
		Minimum	1.5 mm (0.059 in.)
Voltage regulator	Regulating voltage	at 25˚C (77˚F)	14.0 – 15.1 V
		at 115˚C (239˚F)	13.5 – 14.3 V

SS1F3–03

TORQUE SPECIFICATION

Part tightened	N·m	kgf·cm	ft·lbf
Bearing retainer x Drive end frame	3.0	31	27 in.·lbf
Rectifier end frame x Drive end frame	4.5	46	40 in.·lbf
Generator pulley x Rotor	110	1,125	81
Rectifier holder x Lead wire on rectifier end frame	2.9	30	26 in.·lbf
Voltage regulator x Rectifier end frame	2.0	20	18 in.·lbf
Voltage regulator, Brush holder x Rectifier holder	2.0	20	18 in.·lbf
Brush holder x Voltage regulator	2.0	20	18 in.·lbf
Rear end cover x Rectifier holder	4.4	45	39 in.·lbf
Rectifier plate x Rectifier holder	3.8	39	34 in.·lbf
Terminal insulator x Rectifier holder	4.1	42	36 in.·lbf
Drive belt adjusting bar x Timing chain cover	21	210	15
Generator x Generator bracket	59	600	43
Drive belt adjusting bar x Generator	21	210	15

AUTOMATIC TRANSMISSION

SS1F4–02

SERVICE DATA

Line pressure (Wheel locked)	Engine idling	
	D position	422 – 481 kPa (4.3 – 4.9 kgf/cm^2, 61 – 70 psi)
	R position	510 – 608 kPa (5.2 – 6.2 kgf/cm^2, 74 – 88 psi)
	AT stall (Throttle valve fully opened)	
	D position	1,285 – 1,530 kPa (13.1 – 15.6 kgf/cm^2, 128 – 153 psi)
	R position	1,579 – 1,932 kPa (16.1 – 19.7 kgf/cm^2, 158 – 193 psi)
Engine stall revolution	D and R positions	1,950 ± 150 rpm
Time lag	N → D position	Less than 1.2 seconds
	N → D position	Less than 1.5 seconds
Engine idle speed (A/C OFF)	N position	650 ± 50 rpm
Throttle cable adjustment (throttle valve fully closed)		
	Between boot and face and inner cable stopper	0 –1 mm (0 – 0.04 in.)
Shift lever grooved pin		13.5 ± 0.3 mm (0.531 ± 0.012 in.)
Drive plate runout	Max.	0.20 mm (0.0079 in.)
Torque converter clutch runout	Max.	0.30 mm (0.0118 in.)
Torque converter clutch installation distance		More than 15.7 mm (0.618 in.)
Shift point		
*D position (Throttle valve fully opened)	1 → 2	56 – 62 km/h (35 – 39 mph)
	2 → 3	103 – 114 km/h (64 – 71 mph)
	3 → O/D	152 – 163 km/h (94 – 101 mph)
	O/D → 3	145 – 156 km/h (90 – 97 mph)
	3 → 2	95 – 101 km/h (59 – 63 mph)
	2 → 1	42 – 47 km/h (26 – 29 mph)
*2 position (Throttle valve fully opened)	3 → 2	116 – 127 km/h (72 – 79 mph)
L position (Throttle valve fully opened)	2 → 1	56 – 62 km/h (38 – 39 mph)
Lock–up point		
D position (Throttle valve opening 5 %)	Lock–up ON	77 – 83 km/h (48 – 52 mph)
	Lock–up OFF	68 – 74 km/h (42 – 46 mph)

*: There is no 1 → 2 up–shift and 2 → 1 down shift in the 2nd START switch ON.

SS1F5–02

TORQUE SPECIFICATION

Part tightened		N·m	kgf·cm	ft·lbf
Valve body x Transmission case		10	100	7
Oil stainer x Valve body		10	100	7
Oil pan x Transmission case		7.4	75	65 in.·lbf
Drain plug x Oil pan		20	205	15
Parking lock pawl bracket x Transmission case		7.4	75	65 in.·lbf
Front propeller shaft x Front differential		74	750	54
Front propeller shaft x Transfer		74	750	54
Rear propeller shaft x Transfer		88	900	65
Rear propeller shaft x Rear differential		88	900	65
Drive plate x Crankshaft		98	1,000	72
Torque converter clutch x Drive plate		55	550	40
Front exhaust pipe x Exhaust manifold		62	630	46
Front exhaust pipe x TWC		39	400	29
Oil cooler pipe		34	350	25
Transmission x Engine		72	730	53
Exhaust pipe clamp		19	195	14
Park/Neutral position switch	Nut	3.9	40	35 in.·lbf
	Bolt	13	130	9
No. 2 vehicle speed sensor		5.4	55	48 in.·lbf
Speedometer driven gear sleeve x Locking plate		16	160	12
Starter mounting bolt		39	400	29
Transfer shift lever		18	185	13
Stabilizer bar bracket mounting bolt		18	185	13
Engine under cover mounting bolt		28	290	21
Exhaust pipe No. 1 support bracket x Torque converter clutch housing		24	240	17
Crossmember x Frame		61	620	45
Engine rear mounting x Crossmember		74	750	54
Transmission shift lever assembly x Body		5.4	55	48 in.·lbf
Oil cooler mounting bolt		11	115	8
Valve body x Shift solenoid valve		10	100	7
ATF temperature sensor		15	150	11
Fan shroud		5	50	43 in.·lbf
Transmission control rod x Control shaft lever		13	130	9

TRANSFER

SS1F6–02

SERVICE DATA

Idler gear rear bearing adjusting shim thickness	Mark 2	0.30 mm (0.0118 in.)
	Mark 3	0.45 mm (0.0177 in.)
	Mark 4	2.40 mm (0.0945 in.)
	Mark 5	2.60 mm (0.1024 in.)
	Mark 6	2.80 mm (0.1102 in.)
	Mark 7	3.00 mm (0.1181 in.)
	Mark 8	3.20 mm (0.1260 in.)
	Mark 9	3.40 mm (0.1339 in.)
	Mark 10	3.60 mm (0.1417 in.)
	Mark 11	3.80 mm (0.1496 in.)
	Mark 12	4.00 mm (0.1575 in.)
	Mark 13	0.55 mm (0.0216 in.)
Output shaft rear bearing adjusting shim thickness	Mark B	0.30 mm (0.0118 in.)
	Mark C	0.45 mm (0.0177 in.)
	Mark D	1.00 mm (0.0394 in.)
	Mark E	1.20 mm (0.0472 in.)
	Mark F	1.40 mm (0.0551 in.)
	Mark G	1.60 mm (0.0630 in.)
	Mark H	1.80 mm (0.0709 in.)
	Mark J	2.00 mm (0.0787 in.)
	Mark K	2.20 mm (0.0866 in.)
	Mark L	2.40 mm (0.0945 in.)
	Mark M	2.60 mm (0.1024 in.)
	Mark N	0.55 mm (0.0216 in.)
Input gear snap ring thickness	Mark A	2.00 mm (0.0787 in.)
	Mark B	2.10 mm (0.0827 in.)
	Mark C	2.20 mm (0.0866 in.)
	Mark D	2.30 mm (0.0906 in.)
	Mark E	2.40 mm (0.0945 in.)
	Mark F	2.50 mm (0.984 in.)
	Mark G	2.60 mm (0.1024 in.)
	Mark H	2.70 mm (0.1063 in.)
	Mark J	2.80 mm (0.1102 in.)
Input shaft rear ball bearing snap ring thickness	Mark A	2.00 mm (0.0787 in.)
	Mark B	2.10 mm (0.0827 in.)
	Mark C	2.20 mm (0.0866 in.)
	Mark D	2.30 mm (0.0906 in.)
	Mark E	2.40 mm (0.0945 in.)
Idler low gear thrust clearance	STD	0.125 – 0.275 mm (0.0049 – 0.0108 in.)
	Max.	0.275 mm (0.0108 in.)
Idler low gear radial clearance	STD	0.015 – 0.068 mm (0.0006 – 0.0027 in.)
	Max.	0.068 mm (0.0027 in.)
High speed output gear thrust clearance	STD	0.10 – 0.25 mm (0.0039 – 0.0098 in.)
	Max.	0.25 mm (0.0098 in.)
High speed output gear radial clearance	STD	0.015 – 0.071 mm (0.0006 – 0.0028 in.)
	Max.	0.071 mm (0.0028 in.)
Center differential backlash	Min.	0.05 mm (0.0020 in.)

Center differential side gear thrust washer thickness		1.70 mm (0.0669 in.) 1.85 mm (0.0728 in.) 2.00 mm (0.0787 in.) 2.15 mm (0.0846 in.) 2.30 mm (0.0906 in.) 2.45 mm (0.0965 in.) 2.60 mm (0.1024 in.) 2.75 mm (0.1083 in.) 2.90 mm (0.1142 in.) 3.05 mm (0.1201 in.)
Front drive gear piece snap ring thickness	Mark A Mark B Mark C Mark D Mark E Mark F Mark G Mark H Mark J Mark K Mark L	2.00 mm (0.0787 in.) 2.10 mm (0.0827 in.) 2.20 mm (0.0866 in.) 2.30 mm (0.0906 in.) 2.40 mm (0.0945 in.) 2.50 mm (0.0984 in.) 2.60 mm (0.1024 in.) 2.70 mm (0.1063 in.) 2.80 mm (0.1102 in.) 1.80 mm (0.0709 in.) 1.90 mm (0.0748 in.)
Front extension housing ball bearing snap ring thickness	Mark A Mark B	1.70 mm (0.0669 in.) 1.80 mm (0.0709 in.)
Front output shaft hub snap ring thickness	Mark A Mark B Mark C Mark D Mark E	1.80 mm (0.0709 in.) 1.90 mm (0.0748 in.) 2.00 mm (0.0787 in.) 2.10 mm (0.0827 in.) 2.20 mm (0.0866 in.)
Oil pump driven rotor body clearance	STD Max.	0.08 – 0.17 mm (0.0031 – 0.0067 in.) 0.17 mm (0.0067 in.)
Oil pump driven rotor body tip clearance	STD Max.	0.05 – 0.15 mm (0.0020 – 0.0059 in.) 0.15 mm (0.0059 in.)
Oil pump side clearance	STD Max.	0.03 – 0.10 mm (0.0012 – 0.0039 in.) 0.10 mm (0.0039 in.)
Rear extension housing ball bearing snap ring thickness	Mark A Mark B	1.70 mm (0.0669 in.) 1.80 mm (0.0709 in.)
Rear output shaft ball bearing snap ring thickness	Mark 1 Mark 2 Mark 3 Mark 4	1.95 mm (0.0768 in.) 2.05 mm (0.0807 in.) 2.15 mm (0.0847 in.) 2.25 mm (0.0886 in.)
Motor actuator STD resistance	 Terminal 2 – 5 Terminal 2 or 3 – body ground	 0.3 – 100 Ω More than 0.5 MΩ

SS1F7–02

TORQUE SPECIFICATION

Part tightened	N·m	kgf·cm	ft·lbf
Oil pump plate and separator x Rear extension housing	4.9	50	43 in.·lbf
Oil pump cover x Rear extension housing	4.9	50	43 in.·lbf
Lever lock pin	12	120	9
Oil strainer x Rear case	4.9	50	43 in.·lbf
Oil receiver x Front case	12	120	9
Case cover x Rear case	37	380	27
Rear extension housing x Rear case	37	380	27
Front extension housing x Front case	37	380	27
Center Diff Lock Indicator switch	37	380	14
L4 position switch	37	380	27
Neutral position switch	37	380	27
Screw plug x Front case	19	190	14
Screw plug x Rear extension housing	29	300	22
Motor actuator x Front case	18	185	13
Differential front case x Differential rear case	98	1,000	72
Temporarily tighten	88	900	65
Front case x Rear case	37	380	27
Rear case x Retainer	39	400	28
Dynamic damper x Rear extension housing	37	380	27
Vehicle speed sensor drive gear	11	115	8

PROPELLER SHAFT

SERVICE DATA

SS1F8–02

Propeller shaft runout	Max.	0.8 mm (0.031 in)
Spider bearing axial play	Max.	Less than 0.05 mm (0.0020 in.)
Snap ring thickness		
Font propeller shaft and rear propeller shaft (Type B)	Mark or Color	
	1	2.100 – 2.150 mm (0.0827 – 0.0846 in.)
	2	2.150 – 2.200 mm (0.0846 – 0.0866 in.)
	3	2.200 – 2.250 mm (0.0866 – 0.0886 in.)
	Brown	2.250 – 2.300 mm (0.0886 – 0.0906 in.)
	Blue	2.300 – 2.350 mm (0.0906 – 0.0925 in.)
	6	2.350 – 2.400 mm (0.0925 – 0.0945 in.)
	7	2.400 – 2.450 mm (0.0945 – 0.0965 in.)
	8	2.450 – 2.500 mm (0.0965 – 0.0984 in.)
Rear propeller shaft (Type A)		2.00 mm (0.0787 in.)
	Brown	2.03 mm (0.0799 in.)
	Blue	2.06 mm (0.0811 in.)
		2.09 mm (0.0823 in.)

SS1F9–02

TORQUE SPECIFICATION

Part tightened	N·m	kgf·cm	ft·lbf
Front propeller shaft x Front differential	74	750	54
Front propeller shaft x Transfer	74	750	54
Rear propeller shaft x Rear differential	88	900	65
Rear propeller shaft x Transfer	88	900	65

SUSPENSION AND AXLE

SERVICE DATA

SS1FA–02

Cold tire inflation pressure	Tire size P275/70R16 Front Rear	 220 kPa (2.2 kgf/cm^2, 32 psi) 220 kPa (2.2 kgf/cm^2, 32 psi) 220 kPa (2.2 kgf/cm^2, 32 psi) 220 kPa (2.2 kgf/cm^2, 32 psi)
Follow spring and bumper stopper clearance	Follow spring clearance (Front) Bumper stopper clearance (Rear)	36 mm (1.42 in.) 104 mm (4.09 in.)
Front wheel alignment	Camber Right–left error	1˚00’ ± 45’ (1˚ ± 0.75˚) 45’ (0.75˚) or less
	Caster Right–left error	3˚00’ ± 60’ (3˚ ± 1˚) 45’ (0.75˚) or less
	Steering axis inclination	13˚00’ ± 45’ (13˚ ± 0.75˚)
	Toe–in (total)	0˚12’ ± 12’ (0.2˚ ± 0.2˚, 2 ± 2 mm, 0.08 ± 0.08 in.)
	Wheel angle Inside wheel Outside wheel: Reference	32˚00’ – 35˚00’ (32.0˚ – 35.0˚) 31˚00’ (31.0˚)
Tire and wheel	Tire runout Wheel balance (unbalance adjustment) Wheel bearing preload (Starting) Front (Roading load at hub bolt) Rear	3.0 mm (0.118 in.) or less 13.0 g (0.029 lb) or less 28 – 56 N (2.9 – 5.7 kgf, 6.4 – 12.6 lbf) 26 – 57 N (2.6 – 5.8 kgf, 5.7 – 12.8 lbf)
Front axle	Steering knuckle bearing preload (Rotating load at knuckle end, before installing dust seal)	25 – 44 N (2.5 – 4.5 kgf, 5.5 – 9.9 lbf)
Front differential	Drive pinion to ring gear backlash	0.13 – 0.18 (0.0051 – 0.0071 in.)
	Drive pinion bearing preload (at starting) New bearing Reused bearing	0.9 – 1.6 N·m (10 – 16 kgf·cm, 8.7 – 13.9 in.·lbf) 0.5 – 0.8 N·m (5 – 8 kgf·cm, 4.3 – 6.9 in.·lbf)
	Total preload (at starting)	Add drive pinion bearing preload 0.4 – 0.6 N·m (4 – 6 kgf·cm, 3.5 – 5.3 in.·lbf)
	Ring gear runout Max.	0.10 mm (0.0039 in.)
	Pinion gear to side gear backlash	0.05 – 0.20 mm (0.0020 – 0.0079 in.)
	Companion flange runout Maximum Radial Lateral	0.10 mm (0.0039 in.) 0.10 mm (0.0039 in.)
	Oil seal drive depth	1.0 mm (0.039 in.)
	Side gear thrust washer thickness w/o Differntial lock w/ Differntial lock	1.60 mm (0.063 in.) 1.65 mm (0.065 in.) 1.70 mm (0.067 in.) 1.75 mm (0.069 in.) 1.80 mm (0.071 in.) 0.9 mm (0.035 in.) 1.0 mm (0.039 in.) 1.1 mm (0.043 in.) 1.2 mm (0.047 in.) 1.3 mm (0.051 in.)

Front differential (cont'd)	Drive pinion adjusting plate washer thickness	1.70 mm (0.0669 in.) 1.73 mm (0.0681 in.) 1.76 mm (0.0693 in.) 1.79 mm (0.0705 in.) 1.82 mm (0.0717 in.) 1.85 mm (0.0728 in.) 1.88 mm (0.0740 in.) 1.91 mm (0.0752 in.) 1.94 mm (0.0764 in.) 1.97 mm (0.0776 in.) 2.00 mm (0.0787 in.) 2.03 mm (0.0799 in.) 2.06 mm (0.0811 in.) 2.09 mm (0.0823 in.) 2.12 mm (0.0835 in.) 2.15 mm (0.0846 in.) 2.18 mm (0.0858 in.) 2.21 mm (0.0870 in.) 2.24 mm (0.0882 in.) 2.27 mm (0.0894 in.) 2.30 mm (0.0906 in.) 2.33 mm (0.0917 in.)
Rear differential	Drive pinion preload (at starting) New bearing Reused bearing	1.3 – 2.0 N·m (13 – 20 kgf·cm, 11.3 – 17.4 in.·lbf) 0.7 – 1.0 N·m (7 – 10 kgf·cm, 6.1 – 8.7 in.·lbf)
	Total preload (at starting) w/o Differential lock w/ Differential lock	Add drive pinion bearing preload 0.4 – 0.6 N·m (4 – 6 kgf·cm, 3.5 – 5.2 in.·lbf) 0.3 – 0.7 N·m (3 – 7 kgf·cm, 2.6 – 6.1 in.·lbf)
	Drive pinion to ring gear backlash	0.15 – 0.20 mm (0.0059 – 0.0079 in.)
	Pinion gear to side gear backlash	0.02 – 0.20 mm (0.0008 – 0.0079 in.)
	Ring gear runout Max.	0.10 mm (0.0039 in.)
	Companion flange runout Maximum Radial Lateral	0.10 mm (0.0039 in.) 0.10 mm (0.0039 in.)
	Oil seal drive in depth	1.0 mm (0.039 in.)
	Side gear thrust washer thickness	1.55 mm (0.061 in.) 1.60 mm (0.063 in.) 1.65 mm (0.065 in.) 1.70 mm (0.067 in.) 1.75 mm (0.069 in.) 1.80 mm (0.071 in.) 1.85 mm (0.073 in.) 1.90 mm (0.075 in.) 1.95 mm (0.077 in.) 2.00 mm (0.079 in.) 2.05 mm (0.081 in.) 2.10 mm (0.083 in.)

Rear differential (cont'd)	Drive pinion adjusting plate washer thickness	1.050 mm (0.0413 in.) 1.075 mm (0.0423 in.) 1.100 mm (0.0433 in.) 1.125 mm (0.0443 in.) 1.150 mm (0.0453 in.) 1.175 mm (0.0463 in.) 1.200 mm (0.0472 in.) 1.225 mm (0.0482 in.) 1.250 mm (0.0492 in.) 1.275 mm (0.0502 in.) 1.300 mm (0.0512 in.) 1.325 mm (0.0522 in.) 1.350 mm (0.0531 in.) 1.375 mm (0.0541 in.) 1.400 mm (0.0551 in.) 1.425 mm (0.0561 in.) 1.450 mm (0.0571 in.) 1.475 mm (0.0581 in.) 1.500 mm (0.0591 in.) 1.525 mm (0.0600 in.) 1.550 mm (0.0610 in.)
	Side bearing adjusting plate thickness (w/ Differential lock only)	2.67 mm (0.1051 in.) 2.70 mm (0.1063 in.) 2.73 mm (0.1075 in.) 2.76 mm (0.1087 in.) 2.79 mm (0.1098 in.) 2.82 mm (0.1110 in.) 2.85 mm (0.1122 in.) 2.88 mm (0.1134 in.) 2.91 mm (0.1146 in.) 2.94 mm (0.1157 in.) 2.97 mm (0.1169 in.) 3.00 mm (0.1181 in.) 3.03 mm (0.1193 in.) 3.06 mm (0.1205 in.) 3.09 mm (0.1217 in.) 3.12 mm (0.1228 in.) 3.15 mm (0.1240 in.) 3.18 mm (0.1252 in.) 3.21 mm (0.1264 in.) 3.24 mm (0.1276 in.) 3.27 mm (0.1287 in.) 3.30 mm (0.1299 in.) 3.33 mm (0.1311 in.)
Rear axle	Rear axle shaft runout Max. Distance between top surface of axle housing and lock nut	0.8 mm (0.031 in.) –0.2 – 0.9 mm (–0.0079 – 0.0354 in.)

SS1FB–02

TORQUE SPECIFICATION

Part tightened	N·m	kgf·cm	ft·lbf
FRONT			
Axle hub x Disc	64	650	47
Axle hub bearing lock nut	64	650	47
Flange x Axle hub	35	360	26
Brake caliper x Axle carrier	123	1,250	90
Brake caliper x Flexible hose	30	310	22
Steering knuckle x Knuckle arm	96	980	71
Bearing cap x Knuckle arm	96	980	71
Knuckle arm x Tie rod	91	925	67
Steering knuckle x Knuckle spindle	47	475	34
Oil seal retainer x Knuckle arm	5.4	55	48 in.·lbf
ABS speed sensor set bolt x Steering knuckle	18	185	13
Hub bolt	103	1,050	76
Drain plug	49	500	39
Filler plug	49	500	39
Propeller shaft x Companion flange	88	900	65
Side bearing cap x Differential carrier	78	800	58
Ring gear x Differential case	97	985	71
Drive pinion x Companion flange	196 – 343	2,000 – 3,500	145 – 253
Differential LH case x RH case	47	480	35
Differential lock shift retainer	24	240	17
Differential lock screw plug	22	220	16
Differential lock indicator switch	40	410	30
Differential lock actuator	26	270	20
Differential carrier x Axle housing	27	280	20
Adjusting nut lock x Bearing cap	13	130	9
Follow spring x Frame	9.2	94	82 in.·lbf
Stabilizer bar x Axle housing	25	260	19
Shock absorber x Axle housing	69	700	51
Shock absorber x Frame	69	700	51
Stabilizer bar link x Cover	18	185	13
Stabilizer bar link x Link bracket	103	1,050	76
Lateral control rod x Frame	171	1,750	127
Lateral control rod x Axle housing	171	1,750	127
Leading arm x Frame	177	1,800	130
Leading arm x Axle housing	171	1,750	127
REAR			
Rear axle shaft x Axle hub	34	340	25
Rear axle bearing lock nut	59	600	43
Rear axle bearing lock nut screw	5.4	55	48 in.·lbf
Brke caliper x Axle carrier	103	1,050	76
ABS speed sensor set bolt	18	185	13
Hub nut	103	1,050	76

Drain plug		49	500	39
Filler plug		49	500	39
Pinion shaft pin	w/o Differential lock	27	275	20
	w/ Differential lock	58	590	43
Propeller shaft x Companion flange		74	750	54
Side bearing cap x Differential carrier	w/o Differential lock	78	800	58
	w/ Differential lock	113	1,150	83
Ring gear x Differential case		110	1,125	81
Companion flange x Drive pinion	Maximum torque	441	4,500	325
Differential carrier x Axle housing		73	740	54
Adjusting nut lock x Bearing cap		13	130	9
Differential case x Cover		58	590	43
Differential lock shift fork set bolt		20	200	14
Differential lock actuator		24	240	17
Differential lock cover		18	185	13
Differential lock indicator switch		40	410	30
Actuator protector	Nut	35	360	26
	Bolt	20	200	14
Follow spring x Frame		28	290	21
Shock absorber x Bracket		69	700	51
Shock absorber bracket x Frame		50	510	37
Shock absorber x Axle housing		64	650	47
Lateral control rod x Frame		177	1,800	130
Lateral control rod x Axle housing		245	2,500	181
Upper control rod x Frame		177	1,800	130
Upper control rod x Axle housing		177	1,800	130
Upper control arm x Frame		177	1,800	130
Upper control arm x Axle housing		177	1,800	130
Stabilizer bar x Link		25	260	19
Stabilizer bar link x Link bracket		15	153	11
Cover x Axle housing		18	185	13

BRAKE

SERVICE DATA

SS1FC–02

Brake pedal height from asphalt sheet		167.5 – 177.5 mm (6.59 – 6.99 in.)
Brake pedal freeplay		3 – 6 mm (0.12 – 0.24 in.)
Brake pedal reserve distance at 490 N (50 kgf, 110.2 lbf)		More than 68 mm (2.68 in.)
Brake booster push rod to piston clearance (w/ SST)		0 mm (0 in.)
Front brake pad thickness	STD Minimum	9.5 mm (0.374 in.) 1.0 mm (0.039 in.)
Front brake disc thickness	STD Minimum	32.0 mm (1.260 in.) 30.0 mm (1.181 in.)
Front brake disc runout	Maximum	0.15 mm (0.0059 in.)
Rear brake pad thickness	STD Minimum	10.0 mm (0.394 in.) 1.0 mm (0.039 in.)
Rear brake disc thickness	STD Minimum	18.0 mm (0.709 in.) 16.0 mm (0.611 in.)
Rear brake disc runout	Maximum	0.15 mm (0.0059 in.)
Rear brake disc inside diameter	STD Maximum	230 mm (9.06 in.) 231 mm (9.09 in.)
Parking brake shoe lining thickness	STD Minimum	4.0 mm (0.157 in.) 1.0 mm (0.039 in.)
Parking brake lever travel at 196 N (20 kgf, 44.1 lbf)		7 – 9 clicks
Parking brake clearance between rear shoe and lever		Less than 0.35 mm (0.0138 in.)
Parking brake adjusting shim thickness		0.3 mm (0.012 in.) 0.6 mm (0.024 in.) 0.9 mm (0.035 in.)

SS1FD–02

TORQUE SPECIFICATION

Part tightened	N·m	kgf·cm	ft·lbf
Master cylinder x Piston stopper bolt	10	100	7
Master cylinder x Reservoir	1.7	17.5	15.2 in.·lbf
Master cylinder x Brake booster	13	130	9
Brake line union nut	15	155	11
Brake booster clivis lock nut	25	260	19
Brake booster x Pedal bracket	13	130	9
Bleeder plug	11	110	8
Front disc brake caliper installation bolt	123	1,250	90
Front disc brake caliper x Flexible hose	30	310	22
Parking brake bellcrank x Backing plate	13	130	9
Rear disc brake caliper x Spindle pin	88	900	65
Rear disc brake caliper x Flexible hose	30	310	22
Rear disc brake torque plate x Knuckle	103	1,050	76
LSP & BV bracket x Frame	25	260	19
LSP & BV x LSP & BV bracket	13	130	9
LSP & BV spring x LSP & BV bracket	18	185	13
LSP & BV spring x Shackle No. 1	18	185	13
LSP & BV shackle lock nut	25	250	18
LSP & BV shackle x Shackle bracket	13	130	9
LSP & BV shackle bracket x Rear axle housing	19	195	14
ABS actuator assembly x Body	19	195	14
ABS actuator x Actuator bracket	5.4	55	48 in.·lbf
ABS control relay x Actuator bracket	13	130	9
Front speed sensor installation bolt	18	185	13
Rear speed sensor installation bolt	18	185	13

STEERING

SERVICE DATA

SS1FE–02

ON–VEHICLE INSPECTION		
Steering wheel freeplay	Maximum	40 mm (1.57 in.)
Fluid level rise	Minimum	Below 5 mm (020 in.)
Fluid pressure at idle speed with valve closed	Minimum	9,316 kPa (95 kgf/cm^2, 1,351 psi)
Steering effort at idle speed	Minimum	8.3 N·m (85 kgf·cm, 73 in.·lbf)
TILT STEERING COLUMN		
Pawl stopper alignment mark	1 or A	12.65 – 12.75 mm (0.4980 – 0.5020 in.)
	2 or B	12.55 – 12.65 mm (0.4941 – 0.4980 in.)
	3 or C	12.45 – 12.55 mm (0.4902 – 0.4941 in.)
	4 or D	12.35 – 12.45 mm (0.4962 – 0.4902 in.)
	5 or E	12.25 – 12.35 mm (0.4823 – 0.4862 in.)
PS VANE PUMP		
Oil clearance between pump shaft and bushing	STD	0.03 – 0.05 mm (0.0012 – 0.0020 in.)
	Maximum	0.07 mm (0.0028 in.)
Vane plate height	Minimum	8.6 mm (0.339 in.)
Vane plate thickness	Minimum	1.397 mm (0.0550 in.)
Vane plate length	Minimum	14.991 mm (0.5902 in.)
Clearance between rotor groove and vane plate	Maximum	0.033 mm (0.0013 in.)
Vane plate length	Pump rotor mark	
	None	14.995 – 14.997 mm (0.59035 – 0.59043 in.)
	1	14.993 – 14.995 mm (0.59027 – 0.59035 in.)
	2	14.991 – 14.993 mm (0.59020 – 0.59027 in.)
	Cam ring mark	
	2	14.995 – 14.997 mm (0.59035 – 0.59043 in.)
	3	14.993 – 14.995 mm (0.59027 – 0.59035 in.)
	4	14.991 – 14.993 mm (0.59020 – 0.59027 in.)
Spring free length	STD	35 – 37 mm (1.38 – 1.46 in.)
Vane pump rotaing torque	Minimum	0.3 N·m (2.8 kgf·cm, 2.4 in.·lbf)
PS GEAR		
Worm gear valve body ball clearance	Maximum	0.15 mm (0.059 in.)
Cross shaft adjusting screw thrust clearance	STD	0.03 – 0.05 mm (0.0012 – 0.0020 in.)
Worm gear preload		0.3 – 0.5 N·m (3 – 5.5 kgf·cm, 2.6 – 9.6 in.·lbf)
Total preload		0.74 – 1.08 N·m (7.5 – 11.0 kgf·cm, 6.5 – 9.6 in.·lbf)
STEERING LINKAGE		
Tie rod length	Approximately	1.207 mm (47.51 in.)
Relay rod length	Approximately	1.085 mm (42.72 in.)

SS1FF–02

TORQUE SPECIFICATION

Part tightened	N·m	kgf·cm	ft·lbf
TILT STEERING COLUMN			
Steering wheel set nut	34	350	25
Steering wheel pad set screw (Torx screw)	9.0	90	78 in.·lbf
Steering column assembly set nut and bolt	25	250	18
Sliding yoke sub–assembly x Worm gear valve body shaft	34	350	25
Sliding yoke sub–assembly x Intermediate No. 2 shaft	34	350	25
Universal joint x Intermediate No. 2 shaft	34	350	25
Main shaft assembly x Universal joint	34	350	25
Turn signal bracket set bolt	4.9	50	43 in.·lbf
Tilt sub lever side pawl set bolt x Nut	5.9	60	52 in.·lbf
Tilt lever retainer set nut	15	150	11
Tilt lever assembly set bolt	2.9	30	26 in.·lbf
Compression spring set bolt	7.8	80	69 in.·lbf
Column hole cover x Lower dust seal	5.9	60	52 in.·lbf
Column hole cover x Body	13	130	9
Link joint protector set bolt	12	120	9
PS VANE PUMP			
Pressure feed tube set union bolt	56	575	42
PS vane pump assembly set nut	36	370	27
Suction port union set bolt	13	130	9
Vane pump drive gear set nut	74	750	54
Pressure port union	69	700	51
PS GEAR			
Pressure tube x Gear housing assembly for use with SST	36	365	26
for use without SST	44	450	33
Return tube x Gear housing assembly for use with SST	36	365	26
for use without SST	44	450	33
Gear housing assembly x Body	142	1,450	105
Pitman arm x Cross shaft	177	1,800	130
Cross shaft adjusting screw set nut	46	470	34
Side cover x Gear housing	61	620	45
Plunger guide nut	20	205	15
Worm gear valve body assembly x Gear housing	61	620	45
Control valve shaft x Sliding york sub–assembly	34	350	25
STEERING LINKAGE			
Pitman arm x Cross shaft	177	1,800	130
Pitman arm x Relay rod	91	925	67
Tie rod clamp bolt	37	375	27
Tie rod x Knuckle arm	91	925	67
Relay rod x Steering damper	74	750	54
Steering damper x Steering damper bracket	74	750	54
Steering damper bracket x Body	39	400	29
Relay rod clamp bolt	37	375	27

SUPPLEMENTAL RESTRAINT SYSTEM

SS1FG–02

TORQUE SPECIFICATION

Part tightened	N·m	kgf·cm	ft·lbf
Steering wheel	34	350	25
Steering wheel pad	9.0	90	80 in.·lbf
Front passenger airbag assembly x Instrument panel reinforcement	20	205	15
Airbag sensor assembly	20	205	15

BODY ELECTRICAL

SERVICE DATA

SS1H0–01

TURN SIGNAL FLASHER	
Flashes/Minute	60 – 120
SPEEDOMETER (USING A SPEEDOMETER)	
Standard indication (mph)	Allowable range (mph)
20	18 – 24
40	38 – 44
60	58 – 66
80	78 – 88
100	98 – 110
120	118 – 132
TACHOMETER (ON–VEHICLE)	DC 13.5 V 25˚C (77˚F)
Standard indication (RPM)	Allowable range (RPM)
700	630 – 770
1,000	900 – 1,100
2,000	1,875 – 2,125
3,000	2,850 – 3,150
4,000	3,850 – 4,150
5,000	4,850 – 5,150
FUEL RECEIVER GAUGE	
Between terminals	Resistance (Ω)
A – B	85.5 –105.5
A – C	126 – 150
B – C	90 – 110
FUEL SENDER GAUGE	
Float position mm (in.)	Resistance (Ω)
F: Approx. 15 (0.591)	Approx. 3
E: Approx. 200 (7.87)	Approx. 110.0
ENGINE COOLANT TEMPERATURE RECEIVER GAUGE	
Between terminals	Resistance (Ω)
A – B	71 – 79
A – C	117 – 141
B – C	185 – 215
OIL PRESSURE RECEIVER GAUGE	
Resistance (Ω)	40 – 48
SEAT BELT WARNING LIGHT RELAY	
Between terminals	Voltage
5 – Ground (Ignition switch position LOCK or ACC)	No voltage
5 – Ground (Ignition switch position ON)	Battery positive voltage
9 – Ground (Constant)	Battery positive voltage
DOOR LOCK CONTROL RELAY	
Between terminals	Voltage
1 – Ground (Ignition switch position LOCK or ACC)	No voltage
1 – Ground (Ignition switch position ON)	Battery positive voltage

8 – Ground (Constant)	Battery positive voltage
SLIDING ROOF CONTROL RELAY	
Between terminals	Voltage
6 – Ground (Ignition switch position LOCK or ACC)	No voltage
6 – Ground (Ignition switch position ON)	Battery positive voltage
12 – Ground (Constant)	Battery positive voltage
CRUISE CONTROL SWITCH	
Switch position	Resistance (Ω)
OFF	No continuity
RESUME/ACCEL	Approx. 68
SET/COAST	Approx. 198
CANCEL	Approx. 418
CRUISE CONTROL ACTUATOR	
Between terminals	Resistance (kΩ)
1 – 3	Approx. 2
2 – 3	Approx. 0.5 – 1.7
ACTUATOR CONTROL ARM FREE PLAY	0 mm (0 in.)

BODY

TORQUE SPECIFICATION

SS1FI–02

Part tightened	N·m	kgf·cm	ft·lbf
HOOD			
Hood hinge x Body	18	185	13
Hood lock x Body	8.0	80	69 in.·lbf
FRONT BUMPER			
Front bumper arm x Front bumper bracket	39	400	29
Front bumper arm x Body	39	400	29
Front bumper extension x Front bumper	5.4	55	48 in.·lbf
REAR BUMPER			
Rear bumper extension x Rear bumper reinforcement	13	130	9
Rear bumper reinforcement x Body	3.0	30	26 in.·lbf
FRONT DOOR			
Door hinge x Body	28	290	21
Door hinge x Door panel	28	290	21
Door lock x Door panel	5.0	50	43 in.·lbf
Window regulator x Door panel	5.0	50	43 in.·lbf
REAR DOOR			
Door hinge x Body	28	290	21
Door hinge x Door panel	28	290	21
Door lock x Door panel	5.0	50	43 in.·lbf
Window regulator x Door panel	5.0	50	43 in.·lbf
WIPER AND WASHER			
Front wiper arm x Wiper link	20	210	15
Wiper link x Body	5.4	55	48 in.·lbf
Wiper motor x Body	5.4	55	48 in.·lbf
Rear wiper arm x Wiper motor	5.4	55	48 in.·lbf
INSTRUMENT PANEL			
Front passenger airbag assembly x Instrument panel Reinforcement	20	210	15
SEAT (Front seat)			
Seat truck x Body	39	400	29
Power seat adjuster x Seatback frame	29	300	21
Power seat adjuster x Seat cushion frame	29	300	21
Lumber support x Seatback frame	18	185	13
SEAT (No. 1 rear seat)			
Seat cushion hinge x Body	39	400	29
Seat cushion hinge x Seat cushion frame	39	400	29
Seat lock x Seat cushion frame	41	420	30
Seatback lock assembly x Seat cushion	52	530	38
SEAT (No. 2 rear seat)			
Reclining adjuster x Seatback frame	52	530	38
Outer hinge assembly x Body	18	185	13
Seat leg x Body	41	420	30
SEAT (Power Seat adjuster)			

No. 2 vertical seat link x Rear vertical motor	Bolt Nut	10 2.0	100 20	7 17 in.·lbf
No. 1 vertical seat link x Front vertical motor		10	100	7
Seat truck x Seat truck inner reinforcement		20	210	14
Front seat horizontal seat screw x Front seat motor slide housing		20	210	14
Slide motor x Front seat horizontal jack screw	Bolt Nut	10 2.0	100 20	7 17 in.·lbf
Front seat horizontal jack screw x Front seat truck		19	200	14
SEAT BELT				
Adjustable anchor x Body		43	440	32
ELR x Body		5.0	50	43 in.·lbf
Outer belt anchor x Body		43	440	32
Inner belt x Seat		43	440	32

AIR CONDITIONING

SS1FJ–02

SERVICE DATA

Refrigerant charge volume		850 ± 50 g (59.98 ± 1.76 oz.)
Drive belt tension	New belt	100 – 150 lbf
	Used belt	60 – 100 lbf
Idle–up speed	Magnetic clutch not engaged	650 ± 50 rpm
	Magnetic clutch engaged	800 ± 50 rpm
Magnetic clutch clearance		0.5 ± 0.15 mm (0.020 ± 0.0059 in.)

SS1FK–02

TORQUE SPECIFICATION

Part tightened	N·m	kgf·cm	ft·lbf
Compressor x Suction hose	10	100	7
Compressor x Discharge hose	10	100	7
Compressor x Compressor bracket	25	250	18
Compressor bracket x Engine	37	375	27
Receiver x Liquid tube	5.4	55	48 in.·lbf
Condenser x Discharge hose	10	100	7
Cooling unit x Liqied tube	10	100	7
Cooling unit x Suction tube	10	100	7
Pressure switch x Liquid tube	10	100	7
Expansion valve x Evaporator	5.4	55	48 in.·lbf
Liquid line (Union nut)	14	140	10
Suction line (bolt)	10	100	7
Pressure plate x Compressor	13.2	135	9

ENGINE

HOW TO PROCEED WITH TROUBLESHOOTING

DI5K5–01

Troubleshoot in accordance with the procedure on the following page.

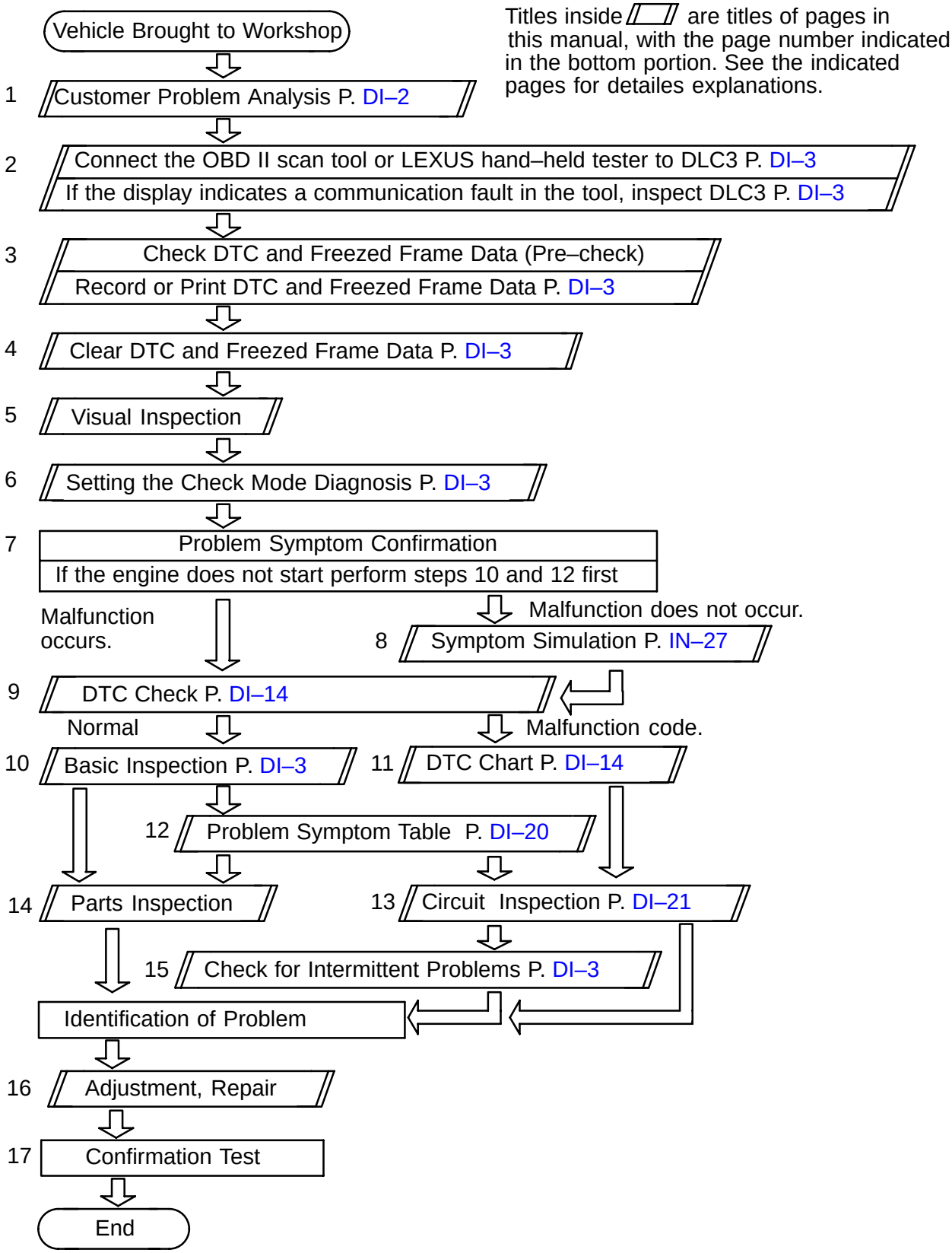

DI5K7–02

CUSTOMER PROBLEM ANALYSIS CHECK

ENGINE CONTROL SYSTEM Check Sheet

Inspector's Name _____

Customer's Name		**Model and Model Year**	
Driver's Name		**Frame No.**	
Data Vehicle Brought in		**Engine Model**	
License No.		**Odometer Reading**	km miles

Problem Symptoms	☐ **Engine does not Start**	☐ **Engine does not crank** ☐ **No initial combustion** ☐ **No complete combustion**
	☐ **Difficult to Start**	☐ **Engine cranks slowly** ☐ **Other** _____
	☐ **Poor Idling**	☐ **Incorrect first idle** ☐ **Idling rpm is abnormal** ☐ **High (rpm)** ☐ **Low (rpm)** ☐ **Rough idling** ☐ **Other** _____
	☐ **Poor Driveaability**	☐ **Hesitation** ☐ **Back fire** ☐ **Muffler explosion (after–fire)** ☐ **Surging** ☐ **Knocking** ☐ **Other** _____
	☐ **Engine Stall**	☐ **Soon after starting** ☐ **After accelerator pedal depressed** ☐ **After accelerator pedal released** ☐ **During A/C operation** ☐ **Shifting from N to D** ☐ **Other** _____
	☐ **Others**	

Datas Problem Occurred		
Problem Frequency		☐ **Constant** ☐ **Sometimes (times per day/month)** ☐ **Once only** ☐ **Other** _____
Condition When Problem Occurs	**Weather**	☐ **Fine** ☐ **Cloudy** ☐ **Rainy** ☐ **Snowy** ☐ **Various/Other** _____
	Outdoor Temperature	☐ **Hot** ☐ **Warm** ☐ **Cool** ☐ **Cold (approx. ____˚F/____˚C)**
	Place	☐ **Highway** ☐ **Suburbs** ☐ **Inner City** ☐ **Uphill** ☐ **Downhill** ☐ **Rough road** ☐ **Other** _____
	Engine Temp.	☐ **Cold** ☐ **Warming up** ☐ **After Warming up** ☐ **Any temp.** ☐ **Other** _____
	Engine Operation	☐ **Starting** ☐ **Just after starting (min.)** ☐ **Idling** ☐ **Racing** ☐ **Driving** ☐ **Constant speed** ☐ **Acceleration** ☐ **Deceleration** ☐ **A/C switch ON/OFF** ☐ **Other** _____

Condition of MIL		☐ **Remains on** ☐ **Sometimes light up** ☐ **Does not light up**
DTC Inspection	**Normal mode (Pre–check)**	☐ **Normal** ☐ **Malfunction code(s) (code)** ☐ **Freezed frame data ( )**
	Check Mode	☐ **Normal** ☐ **Malfunction code(s) (code)** ☐ **Freezed frame data ( )**

DI5K8–02

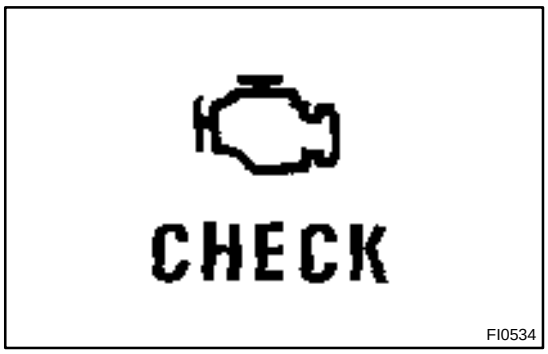

PRE–CHECK

1. DIAGNOSIS SYSTEM

(a) Description

- When troubleshooting OBD II vehicles, the only difference from the usual troubleshooting procedure is that you connect to the vehicle the OBD II scan tool complying with SAE J1978 or LEXUS hand–held tester, and read off various data output from the vehicle's ECM.
- OBD II regulations require that the vehicle's on–board computer lights up the Malfunction Indicator Lamp (MIL) on the instrument panel when the computer detects a malfunction in the computer itself or in drive system components which affect vehicle emissions. In addition to the MIL lighting up when a malfunction is detected, the applicable Diagnostic Trouble Code (DTC) prescribed by SAE J2012 are recorded in the ECM memory (See page DI–14).

If the malfunction does not reoccur in 3 trips, the MIL goes off but the DTCs remain recorded in the ECM memory.

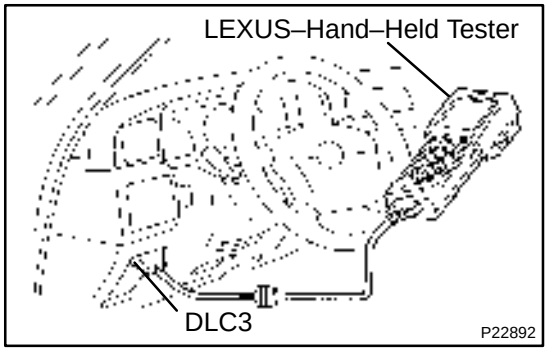

- To check the DTCs, connect the OBD II scan tool or LEXUS hand–held tester to Data Link Connector 3 (DLC3) on the vehicle. The OBD II scan tool or LEXUS hand–held tester also enables you to erase the DTCs and check freezed frame data and various forms of engine data (For operating instructions, see the OBD II scan tool's instruction book.).
- DTCs include SAE controlled codes and manufacturer controlled codes. SAE controlled codes must be set as prescribed by the SAE, while manufacturer controlled codes can be set freely by the manufacturer within the prescribed limits (See DTC chart on page DI–14).

- The diagnosis system operates in normal mode during normal vehicle use. It also has a check mode for technicians to simulate malfunction symptoms and troubleshoot. Most DTCs use 2 trip detection logic* to prevent erroneous detection, and ensure thorough malfunction detection. By switching the ECM to check mode when troubleshooting, the technician can cause the MIL to light up for a malfunction that is only detected once or momentarily (LEXUS hand–held tester only) (See page DI–3).
- *2 trip detection logic:
  When a logic malfunction is first detected, the malfunction is temporarily stored in the ECM memory. If the same malfunction is detected again during the second drive test, this second detection causes the MIL to light up.
- The 2 trip repeats the same mode a 2nd time (However, the IG switch must be turned OFF between the 1st trip and 2nd trip.).
- Freeze frame data:
  Freeze frame data records the engine condition when a misfire (DTC P0300 – P0306) or fuel trim malfunction (DTC P0171, P0172) or other malfunction (first malfunction only), is detected.
- Because freeze frame data records the engine conditions (fuel system, calculator load, engine coolant temperature, fuel trim,engine speed, vehicle speed, etc.) when the malfunction is detected. When troubleshooting, it is useful for determining whether the vehicle was running or stopped, the engine was warmed up or not, the air–fuel ratio was lean or rich, etc. at the time of the malfunction.

Priorities for troubleshooting:
If troubleshooting priorities for multiple DTCs are given in the applicable DTC chart, these should be followed.
If no instructions are given troubleshoot DTCs according to the following priorities.

(1) DTCs other than fuel trim malfunction (DTC P0171, P0172), EGR (DTC P0401, P0402), and misfire (DTC P0300 – P0306).

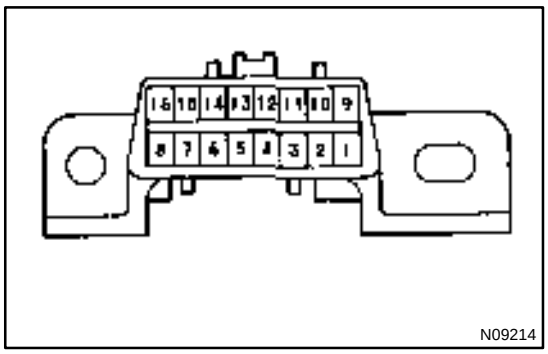

(2) Fuel trim malfunction (DTC P0171, P0172), and EGR (DTC P0401, P0402).
(3) Misfire (DTC P0300 – P0306).

(b) Check the DLC3.
The vehicle's ECM uses V.P.W. (Variable Pulse Width) for communication to comply with SAE J1850. The terminal arrangement of DLC3 complies with SAE J1962 and matches the V.P.W. format.

Terminal No.	Connection / Voltage or Resistance	Condition
2	Bus ⊕ Line / Pulse generation	During transmission
4	Chassis Ground / ↔ Body Ground 1 Ω or less	Always
5	Signal Ground / ↔ Body Ground 1 Ω or less	Always
16	Battery Positive / ↔ Body Ground 9 ~ 14 V	Always

HINT:
If your display shows "UNABLE TO CONNECT TO VEHICLE" when you have connected the cable of the OBD II scan tool or LEXUS hand–held tester to DLC3, turned the ignition switch ON and operated the scan tool, there is a problem on the vehicle side or tool side.

- If communication is normal when the tool is connected to another vehicle, inspect DLC3 on the original vehicle.
- If communication is still not possible when the tool is connected to another vehicle, the problem is probably in the tool itself, so consult the Service Department listed in the tool's instruction manual.

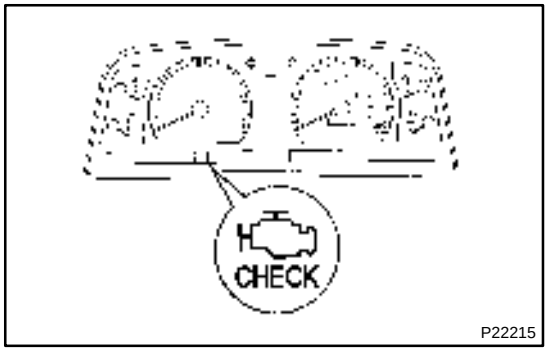

2. INSPECT DIAGNOSIS (Normal Mode)

(a) Check the MIL.
(1) The MIL comes on when the ignition switch is turned ON and the engine is not running.

HINT:
If the MIL does not light up, troubleshoot the combination meter (See page BE–49).

(2) When the engine started, the MIL should go off. If the lamp remains on, the diagnosis system has detected a malfunction or abnormality in the system.

(b) Check the DTC.

NOTICE:
LEXUS hand–held tester only: When the diagnosis system is switched from the normal mode to the check mode, it erases all DTCs and freezed frame data recorded in normal mode. So before switching modes, always check the DTCs and freezed frame data, and note them down.

(1) Prepare the OBD II scan tool (complying with SAE J 1978) or LEXUS hand–held tester.

(2) Connect the OBD II scan tool or LEXUS hand–held tester to DLC3 in the fuse box at the lower left of the instrument panel.
(3) Turn the ignition switch ON and turn the OBD II scan tool or LEXUS hand–held tester switch ON.
(4) Use the OBD II scan tool or LEXUS hand–held tester to check the DTCs and freezed frame data; note them down (For operating instructions, see the OBD II scan tool's instruction book.).
(5) See page DI–14 to confirm the details of the DTCs.

NOTICE:
When simulating symptoms with an OBD II scan tool (excluding LEXUS hand–held tester) to check the DTCs, use the normal mode. For code on the DTC chart subject to "2 trip detection logic", turn the ignition switch OFF after the symptom is simulated the first time. Then repeat the simulation process again. When the problem has been simulated twice, the MIL lights up and the DTCs are recorded in the ECM.

3. INSPECT DIAGNOSIS (Check Mode)

HINT:
LEXUS hand–held tester only:
Compared to the normal mode, the check mode has an increased sensitivity to detect malfunctions.
Furthermore, the same diagnostic items which are detected in the normal mode can also be detected in the check mode.

(a) Check the DTC.
(1) Initial conditions
- Battery positive voltage 11V or more.
- Throttle valve fully closed.
- Transmission in "P" or "N" position.
- Air conditioning switched OFF.

(2) Turn the ignition switch OFF.
(3) Prepare the LEXUS hand–held tester.
(4) Connect the LEXUS hand–held tester to DLC3 in the at the lower left of the instrument panel.
(5) Turn the ignition switch ON and switch the LEXUS hand–held tester ON.
(6) Switch the LEXUS hand–held tester from the normal mode to the check mode (Check that the MIL flashes.).

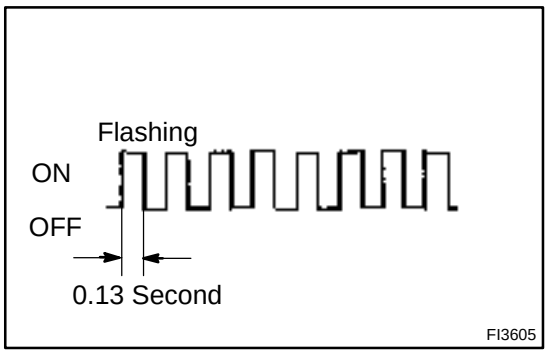

(7) Start the engine (The MIL goes out after the engine start.).

(8) Simulate the conditions of the malfunction described by the customer.

NOTICE:

Leave the ignition switch ON until you have checked the DTC, etc.

(9) After simulating the malfunction conditions, use the LEXUS hand–held tester diagnosis selector to check the DTCs and freezed frame data, etc.

HINT:

Take care not to turn the ignition switch OFF. Turning the ignition switch OFF switches the diagnosis system from the check mode to the normal mode. so all DTCs, etc. are erased.

(10) After checking the DTC, inspect the applicable circuit.

(b) Clear the DTC.

The following actions will erase the DTCs and freezed frame data.

(1) Operating the OBD II scan tool (complying with SAE J1978) or LEXUS hand–held tester to erase the codes. (See the OBD II scan tool's instruction book for operating instructions.)

(2) Disconnecting the battery terminals or EFI fuse.

NOTICE:

If the LEXUS hand–held tester switches the ECM from the normal mode to the check mode or vice–versa, or if the ignition switch is turned from ON to ACC or LOCK during check mode, the DTCs and freezed frame data will be erased.

4. FAIL–SAFE CHART

If any of the following codes is recorded, the ECM enters fail–safe mode.

DTC No.	Fail–Safe Operation	Fail–Safe Deactivation Conditions
P0100	• Ignition timing fixed at 5° BTDC • Injection method fixed at simultaneous injector	Returned to normal condition
P0110	Intake air temp. is fixed at 20°C (68°F)	Returned to normal condition
P0115	Engine coolant temp. is fixed at 80°C (176°F)	Returned to normal condition
P0120	VTA is fixed at 0°	The following condition must be repeated at least 2 times consecutively When closed throttle position switch is ON: 0.1 V ≦ VTA ≦ 0.95 V
P0135 P0141	The heater circuit in witch an abnormality is detected is turned off	Ignition switch OFF
P0325 P0330	Max. timing retardation	Ignition switch OFF
P1300	Fuel cut	IGF signal is detected for 1 ignitions
P1605	Max. timing retardation	Returned to normal condition

Back–up Function:

If there is trouble with the program in the ECM and ignition signals (IGT) are not output from the microcomputer, ECM controls fuel injection and ignition timing at predetermined levels as a back–up function to make it possible to continue to operate the vehicle.
Furthermore, the injection duration is calculated from the starting signal (STA) and the closed throttle position switch signal (IDL). Also, the ignition timing is fixed at 5 °BTDC, without relation to the engine speed.
HINT:
If the engine is controlled by the back–up function, the MIL lights up to warn the driver of the malfunction but the DTC is not output.

5. CHECK FOR INTERMITTENT PROBLEMS

TOYOTA hand–held tester only:
By putting the vehicle's ECM in check mode, 1 trip detection logic is possible instead of 2 trip detection logic and sensitivity to detect open circuits is increased. This makes it easier to detect intermittent problems.

(1) Clear the DTC (See step 2).
(2) Set the check mode (See step 3).
(3) Perform a simulation test (See page IN–27).
(4) Check the connector and terminal (See page IN–27).
(5) Handle the connector (See page IN–27).

6. BASIC INSPECTION

When the malfunction code is not confirmed in the DTC check, troubleshooting should be performed in the order for all possible circuits to be considered as the causes of the problems. In many cases, by carrying out the basic engine check shown in the following flow chart, the location causing the problem can be found quickly and efficiently. Therefore, use of this check is essential in engine troubleshooting.

1	**Is battery positive voltage 11 V or more when engine is stopped?**

NO → **Charge or replace battery.**

YES ↓

2	**Is engine cranked?**

NO → **Proceed to page ST – 12 and continue to troubleshoot.**

YES ↓

3	**Does engine start?**

NO → **Go to step 7.**

YES ↓

4	Check air filter.

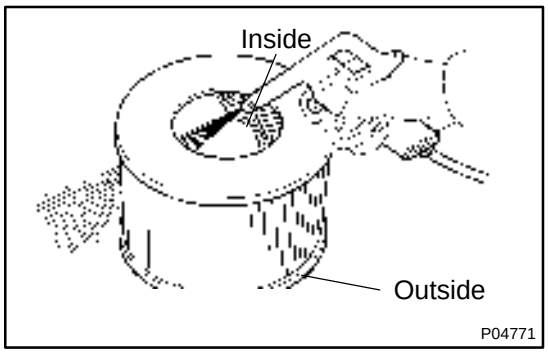

PREPARATION:
Remove the air filter.
CHECK:
If necessary, clean the filter with compressed air. First blow from inside thoroughly, then blow from outside of the filter.

NG → **Repair or replace**

OK

5	Check engine idle speed.

PREPARATION:
(a) Warm up the engine to normal operating temperature.
(b) Switch off all the accessories.
(c) Switch off the A/C.
(d) Shift transmission into N position.
(e) Connect the OBD II scan tool or LEXUS hand–held tester to DLC3 on the vehicle.
CHECK:
Use the CURRENT DATA to check the idle speed.
OK:
Idle speed: 650 ± 50 rpm

NG → **Proceed to problem symptoms table on page DI–2.**

OK

6	Check ignition timing.

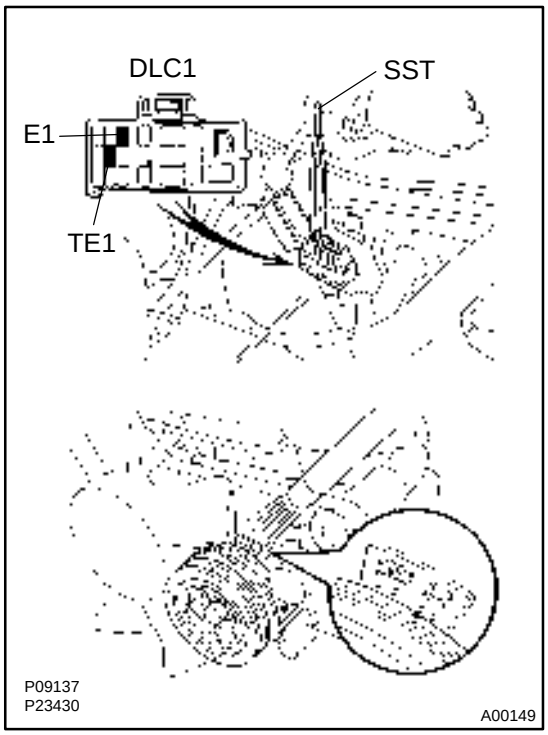

PREPARATION:

(a) Warm up the engine to normal operating temperature.
(b) Shift the transmission into N position.
(c) Keep the engine speed at idle.
(d) Using SST, connect terminals TE1 and E1 of DLC1.
SST 09843–18020
(e) Using a timing light, connect the tester to No.1 high–tension cord.

CHECK:

Check the ignition timing.

OK:

Ignition timing: 3° BTDC at idle

NG → **Proceed to ignition system and continue to troubleshoot.**

OK

Proceed to problem symptoms table on page DI–20.

7	Check fuel pressure.

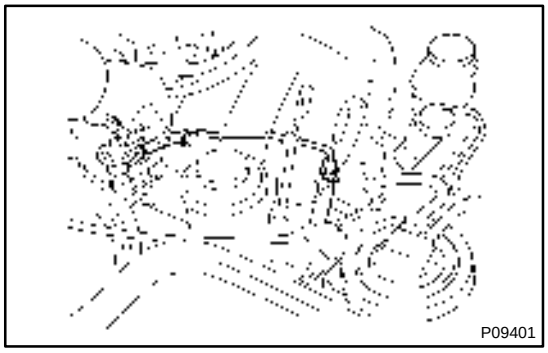

PREPARATION:

(a) Be sure that enough fuel is in the tank.
(b) Connect the LEXUS hand–held tester to the DLC3.
(c) Turn the ignition switch ON and push LEXUS hand–held tester main switch ON.
(d) Use the ACTIVE TEST mode to operate the fuel pump.
(e) If you have no LEXUS hand–held tester, connect the positive (+) and negative (–) leads from the battery to the fuel pump connector (See page SF–6).

CHECK:

Check for fuel pressure in the fuel return hose when it is pinched off.

HINT:

At this time, you will hear a fuel flowing noise.

NG → **Proceed to page SF–6 and continue to troubleshoot.**

OK

8	**Check for spark.**

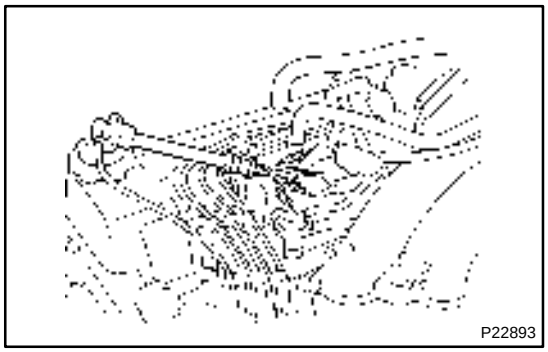

PREPARATION:

(a) Remove No.1 and No.3 cylinder head cover.
(b) Disconnect the high–tension cord from spark plug.
(c) Remove the spark plug.
(d) Install the spark plug to the high–tension cord.
(e) Ground the spark plug.
(f) Disconnect the injector connector.

CHECK:

Check if spark occurs while engine is being cranked.

NOTICE:

To prevent excess fuel being injected from the injectors during this test, don't crank the engine for more than 5 – 10 seconds at a time.

NG → **Proceed to page IG – 1 and continue to troubleshoot.**

OK

Proceed to problem symptoms table on page DI–20.

7. ENGINE OPERATING CONDITION

NOTICE:

The values given below for ”Normal Condition” are representative values, so a vehicle may still be normal even if its value from those listed here. So do not decide whether a part is faulty or not solely according to the ”Normal Condition” here.

(a) CARB mandated signals.

LEXUS hand–held tester display	Measurement Item	Normal Condition*
FUEL SYS #1	Fuel System Bank 1 OPEN: Air–fuel ratio feedback stopped CLOSED: Air–fuel ratio feedback operating	Idling after warming up: CLOSED
CALC LOAD	Calculator Load: Current intake air volume as a proportion of max. intake air volume	Idling: 13.8 – 19.3% Racing without load (2,500rpm): 17.6 – 25.2%
COOLANT TEMP.	Engine Coolant Temp. Sensor Value	After warming up: 80 – 95˚C (176 – 203˚F)
SHORT FT #1	Short–term Fuel Trim Bank 1	0 ± 20%
LONG FT #1	Long–term Fuel Trim Bank 1	0 ± 20%
ENGINE SPD	Engine Speed	Idling: 650 ± 50 rpm
VEHICLE SPD	Vehicle Speed	Vehicle Stopped: 0 km/h (0 mph)
IGN ADVANCE	Ignition Advance: Ignition Timing of Cylinder No. 1	Idling: BTDC 0 – 11˚
INTAKE AIR	Intake Air Temp. Sensor Value	Equivalent to Ambient Temp.
MAF	Air Flow Rate Through Mass Air Flow Meter	Idling: 4.3 – 6.1 gm/sec. Racing without load (2,500 rpm): 21.2 – 30.4 gm/sec.
THROTTLE POS	Voltage Output of Throttle Position Sensor Calculated as a percentage: 0 V → 0%, 5 V → 100%	Throttle Fully Closed: 7 – 11% Throttle Fully Open: 65 – 75%
O2S B1, S1	Voltage Output of Oxygen Sensor Bank 1, Sensor 1	Idling: 0.1 – 0.9 V
O2FT B1, S1	Oxygen Sensor Fuel Trim Bank 1, Sensor 1 (Same as SHORT FT #1)	0 ± 20%
O2S B1, S2	Voltage Output of Oxygen Sensor Bank 1, Sensor 2	Driving (50 km/h, 31 mph): 0.1 – 0.9 V

*: If no conditions are specifically stated for ”Idling”, it means the shift lever is at N or P position, the A/C switch is OFF and all accessory switches are OFF.

(b) LEXUS Enhanced Signals.

LEXUS hand–held tester display	Measurement Item	Normal Condition*
MISFIRE RPM	Engine RPM for first misfire range	Misfire 0: 0 rpm
MISFIRE LOAD	Engine load for first misfire range	Misfire 0: 0 g/r
INJECTOR	Fuel injection time for cylinder No.1	Idling: 2.0 – 3.5 ms
IAC STEP POS	Intake Air Control Valve step position Opening position step motor IAC valve	Idling: 10 – 50 step
STARTER SIG	Starter Signal	Cranking: ON
CTP SW	Closed Throttle Position Switch Signal	Throttle Fully Closed: ON
A/C SIG	A/C Switch Signal	A/C ON: ON
PNP SW	Park/Neutral Position Switch Signal	P or N Position: ON
STOP LIGHT SW	Stop Light Switch Signal	Stop light switch ON: ON
FC IDL	Fuel Cut Idle: Fuel cut when throttle valve fully closed, during deceleration	Fuel cut operating: ON
FC TAU	Fuel Cut TAU: Fuel cut during very light load	Fuel cut operating: ON
CYL#1 ~ CYL#6	Ratio of revolution variation for each cylinder when variation is large	0%
IGNITION	Ignition rate for all cylinders every 1,000 revolutions	0 – 3,000 rpm
EGRT GAS	EGR Gas Temp. Sensor Value	EGR not operating: Temp. between intake air temp. and engine coolant temp.
EGR SYSTEM	EGR System Operating Condition	Idling: OFF
FUEL PRES UP VSV	Fuel Pleasure Up VSV Signal	High temp. restarting: ON
FUEL PUMP	Fuel Pump Signal	Idling: ON
TOTAL FT B1	Total Fuel Trim Bank 1: Average value for fuel trim system of bank 1	Idling: 0.8 – 1.2 V
O2 LR B1, S1	Oxygen Sensor Lean Rich Bank 1, Sensor 1 Response time for oxygen sensor output to switch from lean to rich	Idling after warmed up: 0 – 1,000 msec.
O2 RL B1, S1	Oxygen Sensor Rich Lean Bank 1, Sensor 1 Response time for oxygen sensor output to switch from rich to lean	Idling after warmed up: 0 – 1,000 msec.

*: If no conditions are specifically stated for ”ldling”, it means the shift lever is at N or P position, the A/C switch is OFF and all accessory switches are OFF.

DI5KA–02

DIAGNOSTIC TROUBLE CODE CHART

SAE Defined

HINT:

Parameters listed in the chart may not be exactly the same as your reading due to the type of instrument or other factors.

If a malfunction code is displayed during the DTC check in check mode, check the circuit for that code listed in the table below. For details of each code, turn to the page referred to under the ”See page ” for the respective ”DTC No.” in the DTC chart.

DTC No. (See Page)	Detection Item	Trouble Area	MIL*	Memory
P0100 (DI–21)	Mass Air Flow Circuit Malfunction	• Open or short in mass air flow meter circuit • Mass air flow meter • ECM	○	○
P0101 (DI–25)	Mass Air Flow Circuit Range/Performance Problem	• Mass air flow meter	○	○
P0110 (DI–26)	Intake Air Temp. Circuit Malfunction	• Open or short in intake air temp. sensor circuit • Intake air temp. sensor • ECM	○	○
P0115 (DI–30)	Engine Coolant Temp. Circuit Malfunction	• Open or short in engine coolant temp. sensor circuit • Engine coolant temp. sensor • ECM	○	○
P0116 (DI–34)	Engine Coolant Temp. Circuit Range/Performance Problem	• Engine coolant temp. sensor • Cooling system	○	○
P0120 (DI–35)	Throttle/Pedal Position Sensor/Switch ”A” Circuit Malfunction	• Open or short in throttle position sensor circuit • Throttle position sensor • ECM	○	○
P0121 (DI–39)	Throttle/Pedal Position Sensor/Switch ”A” Circuit Range/Performance Problem	• Throttle position sensor	○	○
P0125 (DI–40)	Insufficient Coolant Temp. for Closed Loop Fuel Control	• Open or short in heated oxygen sensor circuit • Heated oxygen sensor	○	○
P0130 (DI–43)	Heated Oxygen Sensor Circuit Malfunction (Bank 1 Sensor 1)	• Heated oxygen sensor • Fuel trim malfunction	○	○
P0133 (DI–46)	Heated Oxygen Sensor Circuit Slow Response (Bank 1 Sensor 1)	• Heated oxygen sensor	○	○
P0135 (DI–47)	Heated Oxygen Sensor Heater Circuit Malfunction (Bank 1 Sensor 1)	• Open or short in heater circuit of heated oxygen sensor • Heated oxygen sensor heater • ECM	○	○
P0136 (DI–49)	Heated Oxygen Sensor Circuit Malfunction (Bank 1 Sensor 2)	• Heated oxygen sensor	○	○
P0141 (DI–47)	Heated Oxygen Sensor Heater Circuit Malfunction (Bank 1 Sensor 2)	• Same as DTC No. P0135	○	○

*: ○···The MIL lights up, –···The MIL does not light up.

DTC No. (See Page)	Detection Item	Trouble Area	MIL*	Memory
P0171 (DI–51)	System too Lean (Fuel Trim)	• Air intake (hose loose) • Fuel line pressure • Injector blockage • Heated oxygen sensor malfunction • Mass air flow meter • Engine coolant temp. sensor	○	○
P0172 (DI–51)	System too Rich (Fuel Trim)	• Fuel line pressure • Injector leak, blockage • Heated oxygen sensor malfunction • Mass air flow meter • Engine coolant temp. sensor	○	○
P0300 (DI–54)	Random/Multiple Cylinder Misfire Detected	• Ignition system • Injector • Fuel line pressure • EGR • Compression pressure • Valve clearance not to specification • Valve timing • Mass air flow meter • Engine coolant temp. sensor	○	○
P0301 P0302 P0303 P0304 P0305 P0306 (DI–54)	Misfire Detected – Cylinder 1 – Cylinder 2 – Cylinder 3 – Cylinder 4 – Cylinder 5 – Cylinder 6			
P0325 (DI–58)	Knock Sensor 1 Circuit Malfunction	• Open or short in knock sensor 1 circuit • Knock sensor 1 (looseness) • ECM	○	○
P0330 (DI–58)	Knock Sensor 2 Circuit Malfunction	• Open or short in knock sensor 2 circuit • Knock sensor 2 (looseness) • ECM	○	○
P0335 (DI–61)	Crankshaft Position Sensor "A" Circuit Malfunction	• Open or short in crankshaft position sensor circuit for NE signal • Crankshaft position sensor for NE signal • Starter • ECM	○	○
P0340 (DI–63)	Camshaft Position Sensor Circuit Malfunction	• Open or short in camshaft position sensor circuit • Camshaft position sensor • ECM	○	○
P0385 (DI–65)	Crankshaft Position Sensor "B" Circuit Malfunction	• Open or short in crankshaft position sensor circuit for NE2 signal • Camshaft position sensor for NE2 signal • ECM	○	○
P0401 (DI–67)	Exhaust Gas Recirculation Flow Insufficient Detected	• EGR valve stuck closed • Short in VSV circuit for EGR • Open in EGR gas temp. sensor circuit • EGR hose disconnected • ECM	○	○
P0402 (DI–76)	Exhaust Gas Recirculation Flow Excessive Detected	• EGR valve stuck open • EGR VSV open malfunction • Open in VSV circuit for EGR • Short in EGR gas temp. sensor circuit • ECM	○	○

*: ○…The MIL lights up, –…The MIL does not light up.

DTC No. (See Page)	Detection Item	Trouble Area	MIL*	Memory
P0420 (DI–80)	Catalyst System Efficiency Below Threshold	• Three–way catalytic convertor • Open or short in heated oxygen sensor circuit • Heated oxygen sensor	○	○
P0500 (DI–82)	Vehicle Speed Sensor Malfunction	• Combination meter • Open or short in speed sensor circuit • ECM • Vehicle speed sensor	○	○
P0505 (DI–84)	Idle Control System Malfunction	• IAC valve is stuck or closed • Open or short in IAC valve circuit • Open or short A/C signal circuit • Air intake (hose loose)	○	○
P0510 (DI–87)	Closed Throttle Position Switch Malfunction	• Open in closed throttle position switch circuit • Closed throttle position switch • ECM	○	○

Manufacturer Defined

DTC No. (See Page)	Detection Item	Trouble Area	MIL*	Memory
P1300 (DI–91)	Igniter Circuit Malfunction	• Open or short in IGF or IGT circuit from igniter to ECM • Igniter • ECM	○	○
P1335 (DI–96)	Crankshaft Position Sensor Circuit Malfunction (during engine running)	• Open or short in crankshaft position sensor circuit for NE signal • Crankshaft position sensor for NE signal • Starter • ECM	–	○
P1500 (DI–97)	Starter Signal Circuit Malfunction	• Open or short in starter signal circuit • ECM	–	○
P1600 (DI–99)	ECM BATT Malfunction	• Open in back up power source circuit • ECM	○	○
P1605 (DI–101)	Knock Control CPU Malfunction	• ECM	○	○
P1780 (DI–102)	Park/Neutral Position Switch Malfunction	• Short in park/neutral position switch circuit • Park/neutral position switch • ECM	○	○

*: ○···The MIL lights up, –···The MIL does not light up.

DI5KC–02

PARTS LOCATION

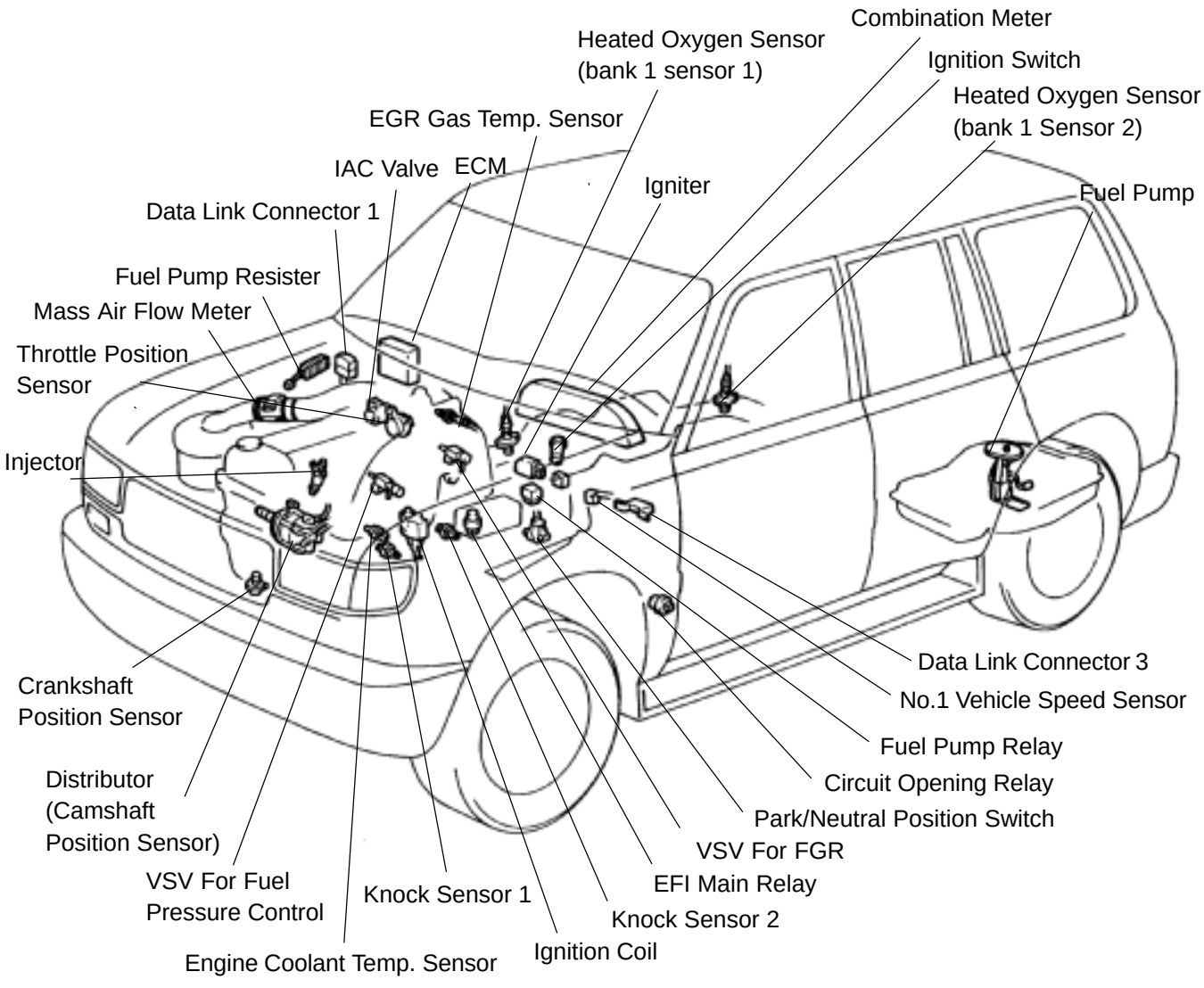

P22543

DI5KF–02

TERMINALS OF ECM

ECM Terminals

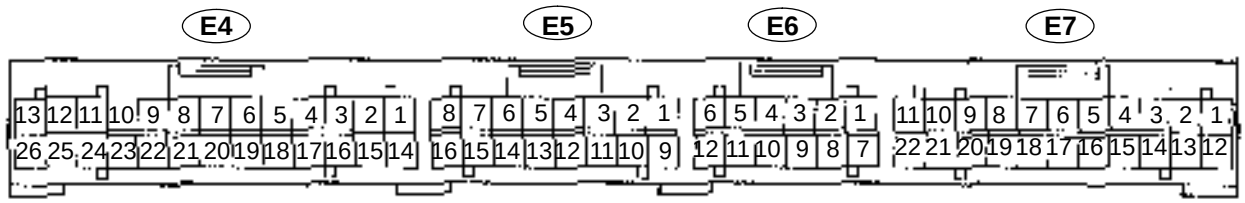

FI6526

Symbols (Terminals No.)	Wiring Color	Condition	STD Voltage (V)
BATT (E7 – 2) – E1 (E4 – 24)	R–Y – BR–B	Always	9 – 14
+B (E7 – 12) – E1 (E4 – 24)	Y – BR–B	IG switch ON	9 – 14
VCC (E5 – 1) – E2 (E5 – 9)	R–G – BR–B	IG switch ON	4.5 – 5.5
IDL (E5 – 11) – E2 (E5 – 9)	G–W – BR–B	IG switch ON and apply vacuum to the throttle opener Throttle valve fully closed	0 – 3
		IG switch ON Throttle valve fully open	9 – 14
VTA (E5 – 10) – E2 (E5 – 9)	G–B – BR–B	IG switch ON Throttle valve fully closed	0.3 – 0.8
		IG switch ON Throttle valve fully open	3.2 – 4.9
VG (E5 – 2) – E21 (E5 – 16)	G – BR	Idling, N position, A/C switch OFF	1.1 – 1.5
THA (E5 – 3) – E2 (E5 – 9)	L–Y – BR–B	Idling, Intake air temp. 20˚C (68˚ F)	0.5 – 3.4
THW (E5 – 4) – E2 (E5 – 9)	R–W – BR–B	Idling, Engine coolant temp. 80˚C (176˚F)	0.2 – 1.0
STA (E7 – 11) – E1 (E4 – 24)	B–R – BR–B	Cranking	6.0 or more
#10 (E4 – 12) – E01 (E4 – 13)	W–L – BR	IG switch ON	9 – 14
		Idling	Pulse generation (See page DI–54)
#20 (E4 – 11) – E01 (E4 – 13)	W–R – BR	IG switch ON	9 – 14
		Idling	Pulse generation (See page DI–54)
#30 (E4 – 25) – E01 (E4 – 13)	W–G – BR	IG switch ON	9 – 14
		Idling	Pulse generation (See page DI–54)
#40 (E4 – 2) – E01 (E4 – 13)	Y – BR	IG switch ON	9 – 14
		Idling	Pulse generation (See page DI–54)
#50 (E4 – 1) – E01 (E4 – 13)	Y–R – BR	IG switch ON	9 – 14
		Idling	Pulse generation (See page DI–54)
#60 (E4 – 15) – E01 (E4 – 13)	Y–L – BR	IG switch ON	9 – 14
		Idling	Pulse generation (See page DI–54)

Symbols (Terminals No.)	Wiring Color	Condition	STD Voltage (V)
IGT (E4 – 23) – E1 (E4 – 24)	B–G – BR–B	Idling	Pulse generation (See page DI–91)
IGF (E4 – 17) – E1 (E4 – 24)	B–Y – BR–B	IG switch ON Disconnect igniter connector	4.5 – 5.5
		Idling	Pulse generation (See page DI–91)
G1 (E6 – 11) – G– (E6 – 6)	R – L	Idling	Pulse generation (See page DI–61)
G2 (E6 – 10) – G– (E6 – 6)	G – L	Idling	Pulse generation (See page DI–61)
NE (E6 – 12) – G– (E6 – 6)	W – L	Idling	Pulse generation (See page DI–61)
NE2 (E6 – 5) – G– (E6 – 6)	BR – L	Idling	Pulse generation (See page DI–61)
W (E7 – 4) – E1 (E4 – 24)	Y–R – BR–B	Idling	9 – 14
		IG switch ON	0 – 3
EGR (E4 – 22) – E1 (E4 – 24)	L–W – BR–B	IG switch ON	9 – 14
ISC1 (E4 – 7) – E01 (E4 – 13)	R–G – BR	IG switch ON	9 – 14
ISC2 (E4 – 6) – E01 (E4 – 13)	R–B – BR	IG switch ON	9 – 14
ISC3 (E4 – 5) – E01 (E4 – 13)	G–Y – BR	IG switch ON	9 – 14
ISC4 (E4 – 4) – E01 (E4 – 13)	L–Y – BR	IG switch ON	9 ~ 14
OX1 (E5 – 5) – E1 (E4 – 24)	L – BR–B	Maintain engine speed at 2,500 rpm for 2 min. after warming up	Pulse generation
OX2 (E5 – 13) – E1 (E4 – 24)	W – BR–B	Maintain engine speed at 2,500 rpm for 2 min. after warming up	Pulse generation
HT1 (E6 – 1) – E03 (E6 – 16)	GR – BR	Idling	Below 3.0
		IG switch ON	9 – 14
HT2 (E6 – 7) – E03 (E6 – 16)	O – BR	Idling	Below 3.0
		IG switch ON	9 – 14
KNK1 (E5 – 6) – E1 (E4 – 24)	W – BR–B	Idling	Pulse generation (See page DI–58)
KNK2 (E5 – 14) – E1 (E4 – 24)	L–W – BR–B	Idling	Pulse generation (See page DI–58)
SPD (E7 – 8) – E1 (E4 – 24)	L–W – BR–B	IG switch ON Rotate driving wheel slowly.	Pulse generation
TE1 (E5 – 7) – E1 (E4 – 24)	L – BR–B	IG switch ON	9 – 14
A/C (E7 – 7) – E1 (E4 – 24)	B–W – R–B	Idling, A/C switch ON	9 – 14
		Idling, A/C switch OFF	Below 2.0
THG (E4 – 19) – E2 (E5 – 9)	G–Y – BR–B	IG switch ON	4.5 – 5.5
FC (E4 – 14) – E1 (E4 – 24)	R–W – BR–B	IG switch ON	9 – 14
		Idling	0 – 3
FPU (E4 – 21) – E1 (E4 – 24)	L–R – BR–B	IG switch ON	9 – 14
		Restarting at high engine coolant temp.	0 – 3
SDL (E7 – 6) – E1 (E4 – 24)	W – BR–B	During transmission	Pulse generation

DI5KG–01

PROBLEM SYMPTOMS TABLE

Symptom	Suspect Area	See page
Engine does not crank (Does not start)	1. Starter and starter relay	ST – 12
No initial combustion (Does not start)	1. ECM power source circuit 2. Fuel pump control circuit	DI–102 DI–102
No complete combustion (Does not start)	1. Fuel pump control circuit	DI–102
Engine cranks normally (Difficult to start)	1. Starter signal circuit 2. Fuel pump control circuit 3. Compression	DI–102 DI–102 EM–3
Cold engine (Difficult to start)	1. Starter signal circuit 2. Fuel pump control circuit	DI–102 DI–102
Hot engine	1. Starter signal circuit 2. Fuel pressure control circuit 3. Fuel pump control circuit	DI–102 DI–102 DI–102
High engine idle speed (Poor idling)	1. A/C signal circuit 2. ECM power source circuit	AC–120 DI–102
Low engine idle speed (Poor idling)	1. A/C signal circuit 2. Fuel pump control circuit	AC–120 DI–102
Rough idling (Poor idling)	1. Compression 2. Fuel pump control circuit	EM–3 DI–102
Hunting (Poor idling)	1. ECM power source circuit 2. Fuel pump control circuit	DI–102 DI–102
Hesitation/Poor acceleration (Poor driveability)	1. Fuel pump control circuit 2. A/T faulty	DI–102 AT–19
Surging	1. Fuel pump control circuit	DI–102
Soon after starting (Engine stall)	1. Fuel pump control circuit	DI–102
During A/C operation (Engine stall)	1. A/C signal circuit (Compressor circuit) 2. Engine control module (ECM)	AC–120 IN–27

DI5KJ–02

CIRCUIT INSPECTION

DTC	P0100	Mass Air Flow Circuit Malfunction

CIRCUIT DESCRIPTION

The mass air flow meter uses a platinum hot wire. The hot wire air flow meter consists of a platinum hot wire, thermistor and a control circuit installed in a plastic housing. The hot wire air flow meter works on the principle that the hot wire and thermistor located in the intake air bypass of the housing detect any changes in the intake air temp.

The hot wire is maintained at the set temp. by controlling the current flow through the hot wire. This current flow is then measured as the output voltage of the air flow meter.

The circuit is constructed so that the platinum hot wire and thermistor provide a bridge circuit,with the power transistor controlled so that the potential of A and B remains equal to maintain the set temp.

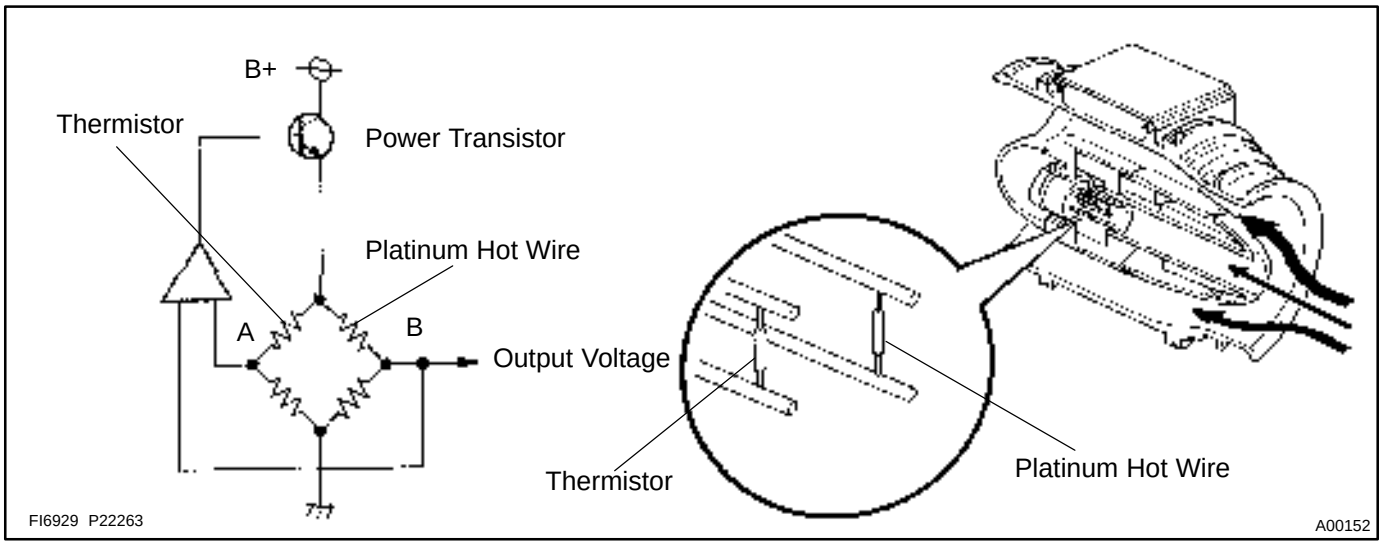

DTC No.	DTC Detection Condition	Trouble Area
P0100	Open or short in mass air flow meter circuit with engine speed 4,000 rpm or less	• Open or short in mass air flow meter circuit • Mass air flow meter • ECM

If the ECM detects DTC P0100, it operates the fail safe function, keeping the ignition timing and injection volume constant and marking it possible to drive the vehicle.

HINT:

After confirming DTC P0100, use the OBD II scan tool or LEXUS hand–held tester to confirm the mass air flow ratio from the CURRENT DATA.

Mass Air Flow Value (gm/sec.)	Malfunction
Approx. 0	• Mass air flow meter power source circuit open • VG circuit open or short
439.0 or more	• E21 circuit open

WIRING DIAGRAM

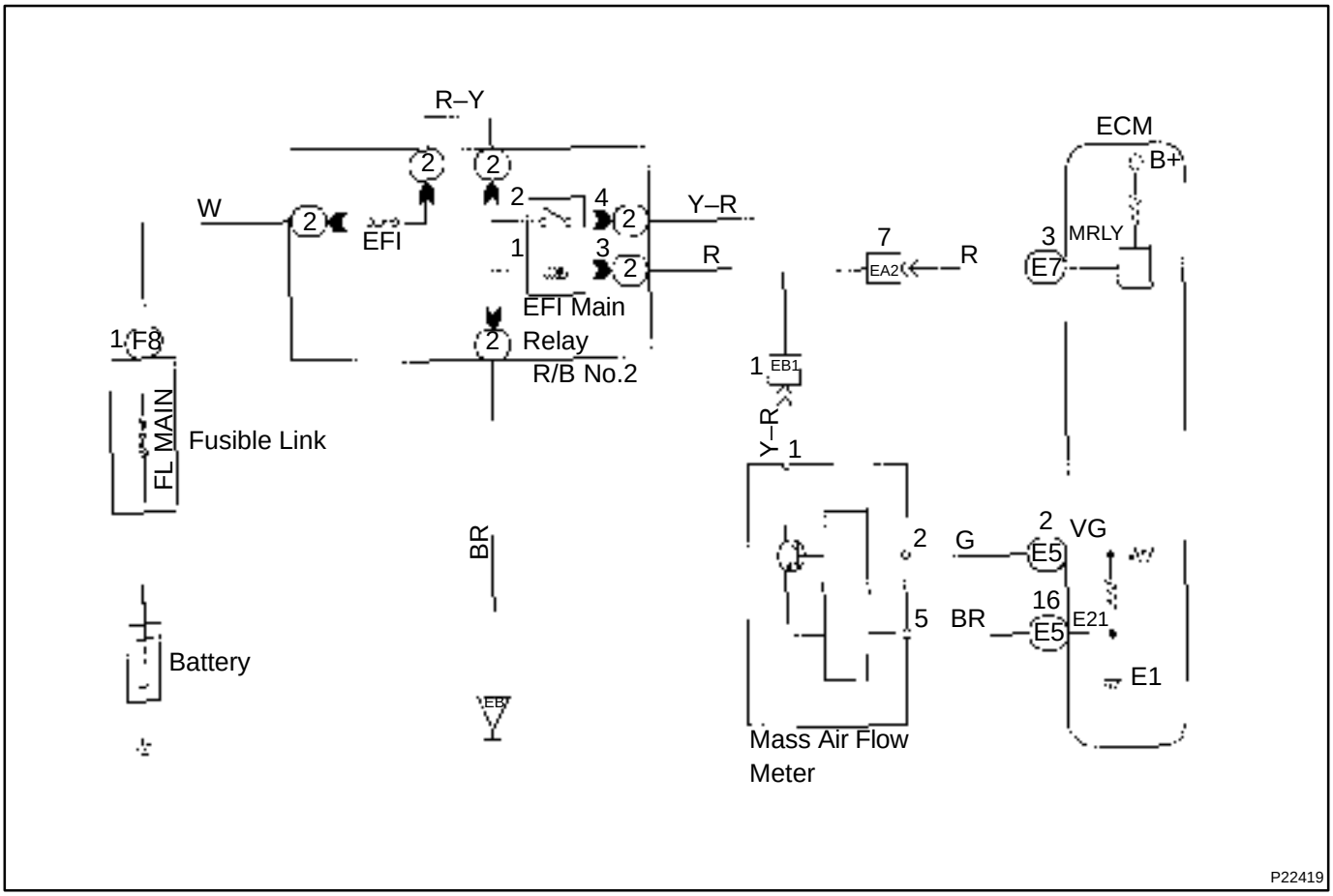

INSPECTION PROCEDURE

1	**Connect the OBD II scan tool or LEXUS hand–held tester, and read value of mass air flow rate.**

PREPARATION:

(a) Remove the fuse cover on the instrument panel.
(b) Connect the OBD II scan tool or LEXUS hand–held tester to the DLC3.
(c) Turn the ignition switch ON and push the OBD II scan tool or LEXUS hand–held tester main switch ON.
(d) Start the engine.

CHECK:

Read the mass air flow rate on the OBD II scan tool or LEXUS hand–held tester.

RESULT:

	Type I	Type II
Mass air flow rate (gm/sec.)	Approx. 0	439.0 gm/sec. or more

Type I	**Go to step 2.**
Type II	**Go to step 5.**

2	**Check voltage of mass air flow meter power source.**

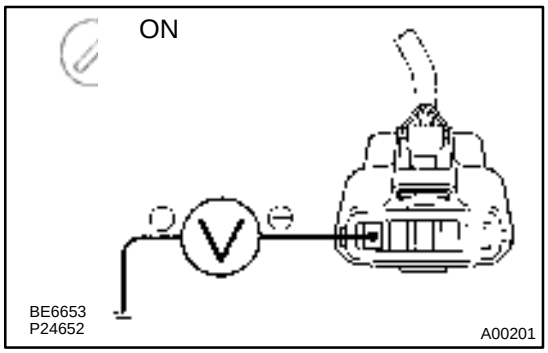

PREPARATION:

(a) Disconnect the mass air flow meter connector.

(b) Turn the ignition switch ON.

CHECK:

Measure the voltage between terminal 1 of mass air flow meter connector and body ground.

OK:

Voltage: 9 – 14 V

NG → **Check for open in harness and connector between EFI main relay (Marking: EFI) and mass air flow meter (See page IN–27).**

OK

3	**Check voltage between terminals VG of ECM connector and body ground.**

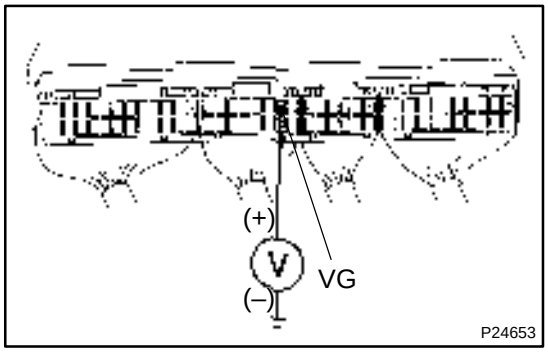

PREPARATION:

(a) Remove the instrument panel speaker No.1 panel (See page SF–63).

(b) Start the engine.

CHECK:

Measure the voltage between terminal VG of ECM and body ground while the engine is idling.

OK:

Voltage:

1.1 – 1.5 V (P or N position and A/C switch OFF)

OK → **Check and replace ECM (See page IN–27).**

NG

4	**Check for open and short in harness and connector between mass air flow meter and ECM (See page IN–27).**

NG → **Repair or replace harness or connector.**

OK

Replace mass air flow meter.

5	**Check continuity between terminal E21 of ECM connector and body ground.**

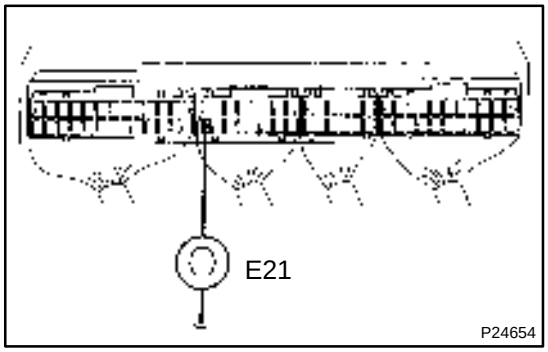

PREPARATION:
Remove the instrument panel speaker No.1 panel
(See page SF–63).

CHECK:
Check the continuity between terminal E21 of ECM connector and body ground.

OK:
Continuity (1 Ω or less)

NG → **Check and replace ECM (See page IN–27).**

OK

6	**Check for open in harness and connector between mass air flow meter and ECM (See page IN–27).**

NG → **Repair or replace harness or connector.**

OK

Replace mass air flow meter.

DI5KL–02

DTC	P0101	Mass Air Flow Circuit Range/Performance Problem

CIRCUIT DESCRIPTION

Refer to DTC P0100 on page DI–21.

DTC No.	DTC Detection Condition	Trouble Area
P0101	Conditions (a) and (b) continue with engine speed 900 rpm or more: (2 trip detection logic) (a) Closed throttle position switch: ON (b) Mass air flow meter output < 2.2 V	• Mass air flow meter

WIRING DIAGRAM

Refer to DTC P0100 on page DI–21.

INSPECTION PROCEDURE

1	**Are there any other codes (besides DTC P0101) being output?**

YES → **Go to relevant DTC chart.**

NO →

Replace mass air flow meter.

DI5KN–02

DTC	P0110	Intake Air Temp. Circuit Malfunction

CIRCUIT DESCRIPTION

Fig. 1

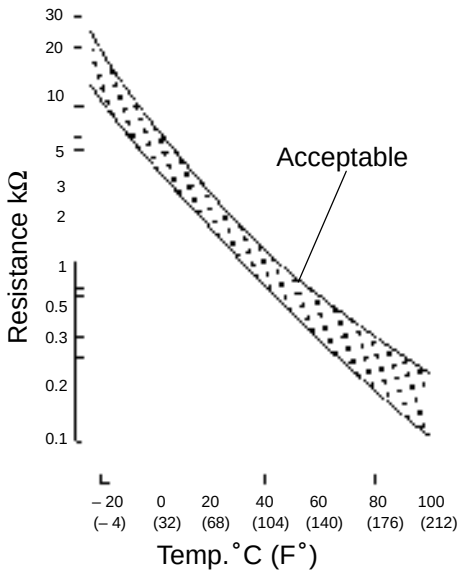

FI4741

The intake air temperature sensor is built into the air flow meter and sensors the intake air temperature.
A thermistor built in the sensor changes the resistance value according to the intake air temperature,The lower the intake air temp.,the greater the thermistor resistance value, and the higher the intake air temperature, the lower the thermistor resistance value (See fig.1).
The intake air temperature sensor is connected to the ECM (See next page). The 5V power source voltage in the ECM is applied to the intake air temperature sensor from the terminal THA via a resistor R.
That is, the resistor R and the intake air temperature sensor are connected in series. When the resistance value of the intake air temperature sensor changes in accordance with changes in the intake air temperature, the potential at terminal THA also changes. Based on this signal, the ECM increases the fuel injection volume to improve driveability during cold engine operation.
If the ECM detects the DTC P0110, it operates the fail safe function in which the intake air temperature is assumed to be 20˚C (68˚F).

DTC No.	DTC Detection Condition	Trouble Area
P0110	Open or short in intake air temp. sensor circuit	• Open or short in intake air temp. sensor circuit • Intake air temp. sensor • ECM

HINT:
After confirming DTC P110, use the OBD II scan tool or LEXUS hand–held tester to confirm the intake air temp. from the CURRENT DATA.

Temp. Displayed	Malfunction
– 40˚C (– 40˚F)	Open circuit
140˚C (284˚F) or more	Short circuit

WIRING DIAGRAM

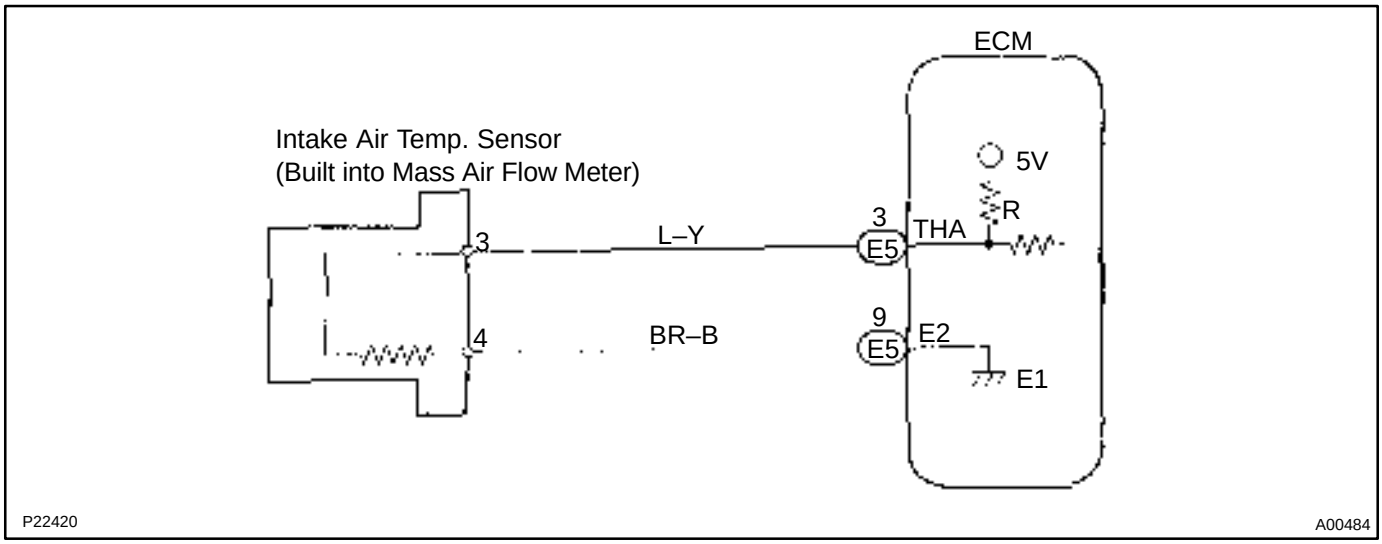

INSPECTION PROCEDURE

HINT:

If DTC P0110, P0115, P0116, P0120 and P0121 are output simultaneously, E2 (sensor ground) may be open.

1	**Connect OBD II scan tool or LEXUS hand–held tester, and read value of intake air temp.**

PREPARATION:

(a) Remove the fuse cover on the instrument panel.

(b) Connect the OBD II scan tool or LEXUS hand–held tester to DLC3.

(c) Turn the ignition switch ON and push the OBD II scan tool or LEXUS hand–held tester main switch ON.

CHECK:

Read the temperature value on the OBD II scan tool or LEXUS hand–held tester.

OK:

Same as actual intake temperature

HINT:

- If there is open circuit, OBD II scan tool or LEXUS hand–held tester indicates – 40˚C (– 40˚F).
- If there is short circuit, OBD II scan tool or LEXUS hand–held tester indicates 140˚C (284˚F) or more.

NG → **–40˚C (–40˚F) ....Go to step 2.**
140˚C (284˚F) or more ....Go to step 4.

OK

Check for intermittent problems
(See page DI–3).

2	Check for open in harness or ECM.

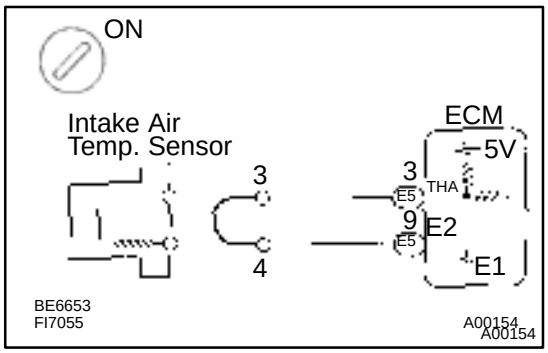

PREPARATION:

(a) Disconnect the mass air flow meter connector.

(b) Connect sensor wire harness terminals together.

(c) Turn the ignition switch ON.

CHECK:

Read the temperature value on the OBD II scan tool or LEXUS hand–held tester.

OK:

Temperature value: 140˚C (284˚F) or more

OK	Confirm good connection at sensor. If OK, replace intake air temp. sensor.

NG

3	Check for open in harness or ECM.

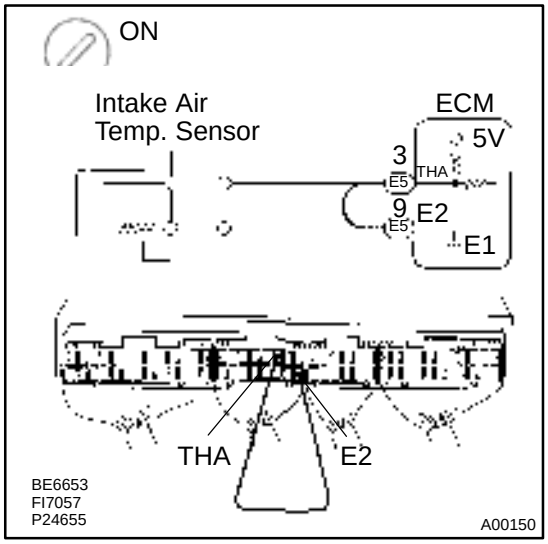

PREPARATION:

(a) Remove the instrument panel speaker No.1 panel (See page SF–63).

(b) Connect between terminals THA and E2 of ECM connector.

HINT:

The mass air flow meter connector is disconnected.

Before checking, do a visual and contact pressure check for the ECM connector (See page IN–27).

(c) Turn the ignition switch ON.

CHECK:

Read the temperature value on the OBD II scan tool or LEXUS hand–held tester.

OK:

Temperature value: 140˚C (284˚F) or more

OK	Open in harness between terminals E2 or THA, repair or replace harness.

NG

Confirm good connection at ECM.
If OK, replace ECM.

4	**Check for open in harness and ECM.**

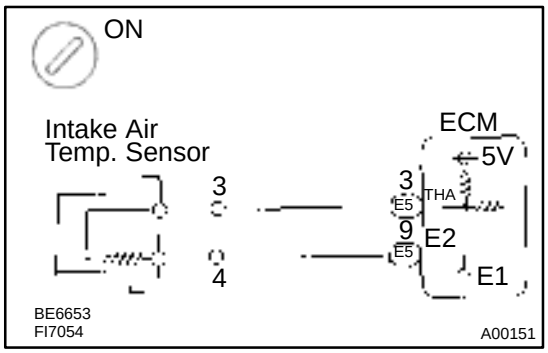

PREPARATION:

(a) Disconnect the mass air flow meter connector.

(b) Turn the ignition switch ON.

CHECK:

Read the temperature value on the OBD II scan tool or LEXUS hand–held tester.

OK:

Temperature value: –40˚C (–40˚F)

OK → **Replace intake air temp. sensor.**

NG

5	**Check for short in harness or ECM.**

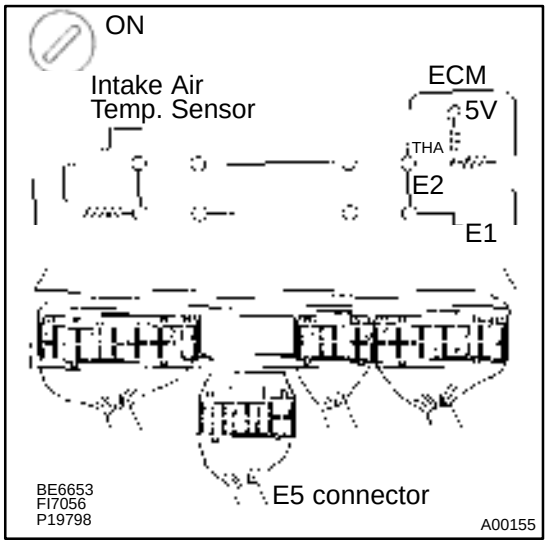

PREPARATION:

(a) Remove the instrument panel speaker No.1 panel (See page SF–63)

(b) Disconnect the E5 connector of ECM.

HINT:

The mass air flow meter connector is disconnected.

(c) Turn the ignition switch ON.

CHECK:

Read the temperature value on the OBD II scan tool or LEXUS hand–held tester.

OK:

Temperature value: –40˚C (–40˚F)

OK → **Repair or replace harness or connector.**

NG

Check and replace ECM (See page IN–27).

DI5KP–02

DTC	P0115	Engine Coolant Temp. Circuit Malfunction

CIRCUIT DESCRIPTION

A thermistor built into the engine coolant temprerature sensor changes the resistance value according to the engine coolant temperature.
The structure of the sensor and connection to the ECM is the same as in the intake air temperature circuit malfunction shown on page DI–26.
If the ECM detects the DTC P0115, it operates the fail safe function in which the engine coolant temperature is assumed to be 80˚C (176 ˚F).

DTC No.	Detection Condition	Trouble Area
P0115	Open or short in engine coolant temp. sensor circuit	• Open or short in engine coolant temp. sensor circuit • Engine coolant temp. sensor • ECM

HINT:
After confirming DTC P0115, use the OBD II scan tool or LEXUS hand–held tester to confirm the engine coolant temperature from the CURRENT DATA.

Temp. Displayed	Malfunction
–40˚C (–40˚F)	Open circuit
140˚C (284˚F) or more	Short circuit

WIRING DIAGRAM

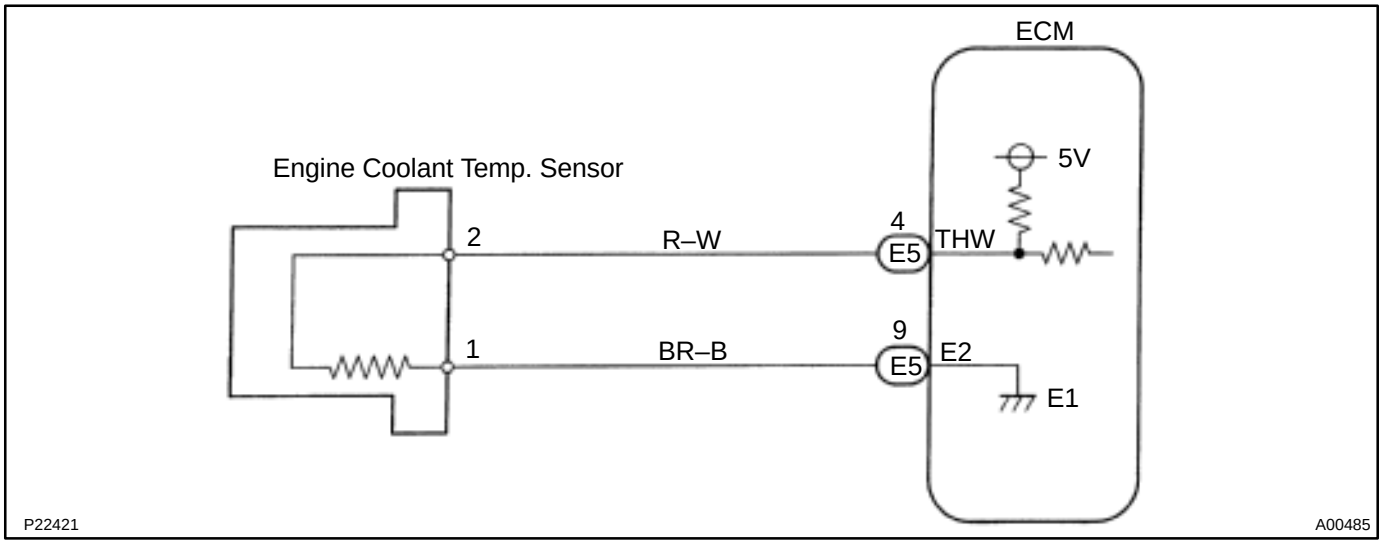

INSPECTION PROCEDURE

HINT:

If DTC P0110, P0115, P0116, P0120 and P0121 are output simultaneously, E2 (sensor ground) may be open.

1	**Connect OBD II scan tool or LEXUS hand–held tester, and read value of engine coolant temp.**

PREPARATION:

(a) Remove the fuse cover on the instrument panel.

(b) Connect the OBD II scan tool or LEXUS hand–held tester to the DLC3.

(c) Turn the ignition switch ON and push the OBD II scan tool or LEXUS hand–held tester main switch ON.

CHECK:

Read the temperature value on the OBD II scan tool or LEXUS hand–held tester.

OK:

Same as actual engine coolant temperature

HINT:

- If there is open circuit, OBD II scan tool or LEXUS hand–held tester indicates – 40˚C (– 40˚F).
- If there is open circuit, OBD II scan tool or LEXUS hand–held tester indicates 140˚C (284˚F) or more.

NG → **–40˚C (–40˚F) ... Go to step 2.**
140˚C (284˚F) or more ... Go to step 4.

OK

Check for intermittent problems
(See page DI–3).

2	**Check for open in harness or ECM.**

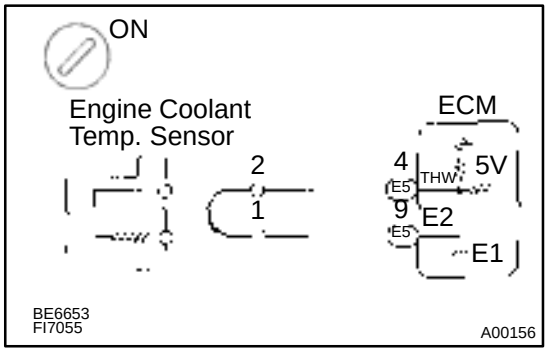

PREPARATION:

(a) Disconnect the engine coolant temperature sensor connector.

(b) Connect sensor wire harness terminals together.

(c) Turn the ignition switch ON.

CHECK:

Read the temperature value on the OBD II scan tool or LEXUS hand–held tester.

OK:

Temperature value: 140˚C (284˚F) or more

OK → **Confirm good connection at sensor.**
If OK, replace engine coolant temp. sensor.

NG

3	**Check for open in harness or ECM.**

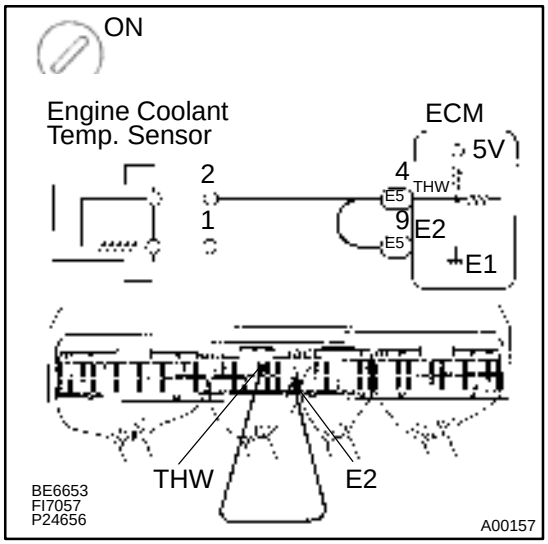

PREPARATION:

(a) Remove instrument panel speaker No.1 panel (See page SF–63).

(b) Connect between terminals THW and E2 of ECM connector.

HINT:

Engine coolant temperature sensor connector is disconnected. Before checking, do a visual and contact pressure check for the ECM connector (See page IN–27).

(c) Turn the ignition switch ON.

CHECK:

Read the temperature value on the OBD II scan tool or LEXUS hand–held tester.

OK:

Temperature value: 140˚C (284˚F) or more

OK	**Open in harness between terminals E2 or THW, repair or replace harness.**

NG

Confirm good connection at ECM.
If OK, replace ECM.

4	**Check for short in harness or ECM.**

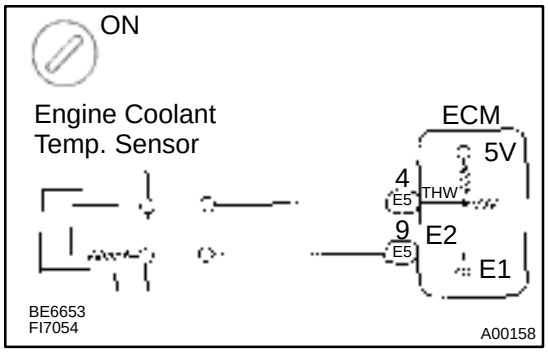

PREPARATION:

(a) Disconnect the engine coolant temperature sensor connector.

(b) Turn the ignition switch ON.

CHECK:

Read the temperature value on the OBD II scan tool or LEXUS hand–held tester.

OK:

Temperature value: – 40˚C (– 40˚F)

OK	**Replace engine coolant temp. sensor.**

NG

5	Check for short in harness or ECM.

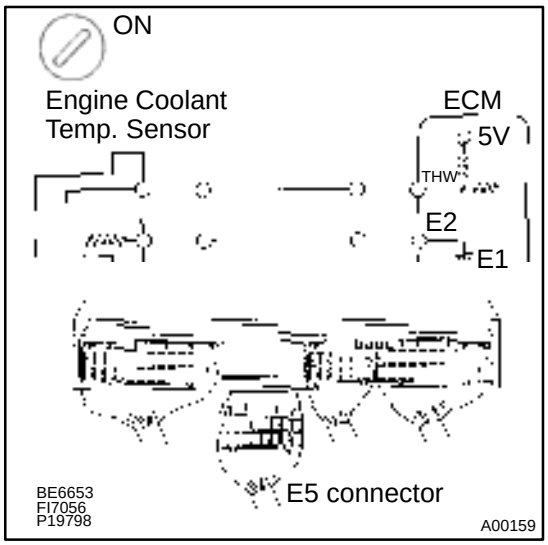

PREPARATION:

(a) Remove the instrument panel speaker No.1 panel (See page SF–63).

(b) Disconnect the E5 connector of ECM.

HINT:

The engine coolant temperature sensor connector is disconnected.

(c) Turn the ignition switch ON.

CHECK:

Read the temperature value on the OBD II scan tool or LEXUS hand–held tester.

OK:

Temperature value: – 40˚C (– 40˚F)

OK	Repair or replace harness or connector.

NG

Check and replace ECM (See page IN–27).

DI5KR–02

DTC	P0116	Engine Coolant Temp. Circuit Range/ Performance Problem

CIRCUIT DESCRIPTION

Refer to DTC P0115 on page DI–30.

DTC No.	DTC Detection Condition	Trouble Area
P0116	If THW ≦ 10˚C (50˚F), 2 min. or more after starting engine, engine coolant temp. sensor value is 35˚C (95˚F) or less (2 trip detection logic)	• Engine coolant temp. sensor • Cooling system
	If –7˚C (19.4˚F) ≦ THW < 10˚C (50˚F), 5 min. or more after starting engine, engine coolant temp. sensor value 35˚C (95˚F) or less (2 trip detection logic)	
	If THW < –7˚C (19.4˚F), 20 min. or more after starting engine, engine coolant temp. sensor value is 35˚C (95˚F) or less (2 trip detection logic)	

INSPECTION PROCEDURE

HINT:
If DTC P0115 and P0116 are output simultaneously, engine coolant temperature sensor circuit may be open. Perform troubleshooting of DTC P0115 first.

1	**Are there any other codes (besides DTC P0116) being output?**

YES → **Go to relevant DTC chart.**

NO

2	**Check thermostat (See page CO–7).**

NO → **Replace thermostat.**

OK

Replace engine coolant temp. sensor.

DI5KU–02

DTC	P0120	Throttle/Pedal Position Sensor/Switch ”A” Circuit Malfunction

CIRCUIT DESCRIPTION

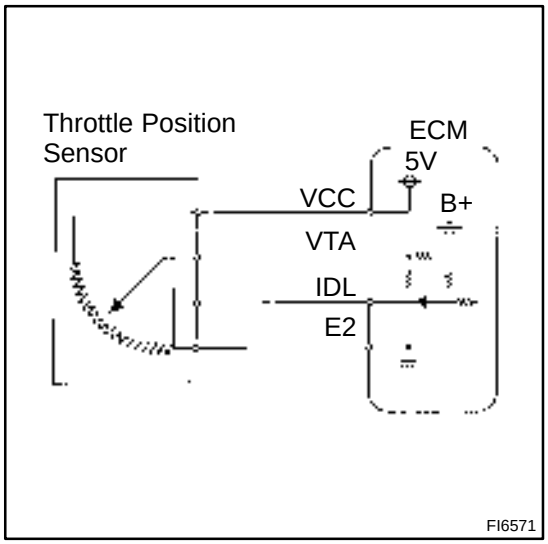

The throttle position sensor is mounted in the throttle body and detects the throttle valve opening angle.
When the throttle valve is fully closed, the IDL contacts in the throttle position sensor are on, so the voltage at the terminal IDL of the ECM becomes 0V. At this time, a voltage of approximately 0.3 – 0.8 V is applied to terminal VTA of the ECM. When the throttle valve is opened, the IDL contacts go off and thus the power source voltage of approximately 12 V in the ECM is applied to the terminal IDL of the ECM. The voltage applied to the terminals VTA of the ECM increases in proportion to the opening angle of the throttle valve and becomes approximately 3.2 – 4.9 V when the throttle valve is fully opened. The ECM judges the vehicle driving conditions from these signals input from terminals VTA and IDL, uses them as one of the conditions for deciding the air–fuel ratio correction, power increase correction and fuel–cut control etc.

DTC No.	DTC Detection Condition	Trouble Area
P0120	Condition (a) or (b) continues (a) VTA < 0.1 V, and closed throttle position switch is OFF (b) VTA > 4.9 V	• Open or short in throttle position sensor circuit • Throttle position sensor • ECM

HINT:
- If there is open circuit in IDL line, DTC P0120 does not indicate.
- After confirming DTC P0120, use the OBD II scan tool or LEXUS hand–held tester to confirm the throttle valve opening percentage and closed throttle position switch condition.

Throttle valve opening position expressed as percentage		Trouble Area
Throttle valve fully closed	Throttle valve fully open	
0 %	0 %	VCC line open VTA line open or short
Approx. 99 %	Approx. 100 %	E2 line open

WIRING DIAGRAM

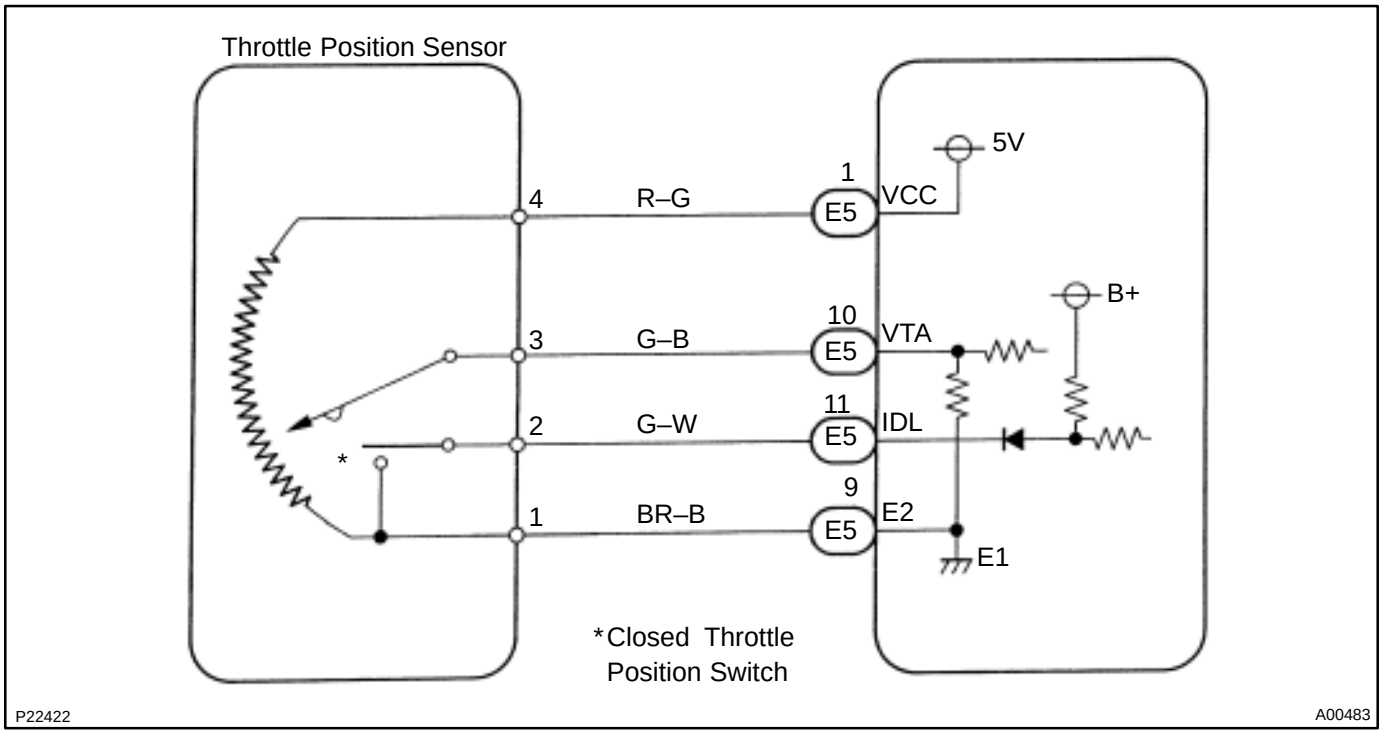

INSPECTION PROCEDURE

HINT:

If DTC P0110, P0115, P0116, P0120 and P0121 are output simultaneously, E2 (sensor ground) may be open.

1	**Connect the OBD II scan tool or LEXUS hand–held tester, read the throttle valve opening percentage.**

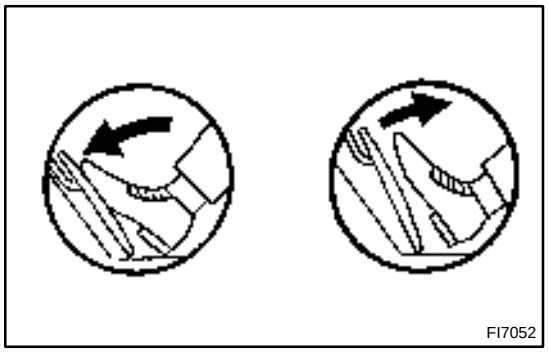

PREPARATION:

(a) Remove the fuse cover on the instrument panel.

(b) Connect the OBD II scan tool or LEXUS hand–held tester to DLC3.

(c) Turn the ignition switch ON and push the OBD II scan tool or LEXUS hand–held tester main switch ON.

CHECK:

Read the throttle valve opening percentage.

OK:

Throttle valve	Throttle valve opening position expressed as percentage
Fully open	Approx. 75 %
Fully closed	Approx. 10 %

OK → **Check for intermittent problems (See page DI–3).**

NG

2	**Check voltage between terminal 1 of wire harness side connector and body ground.**

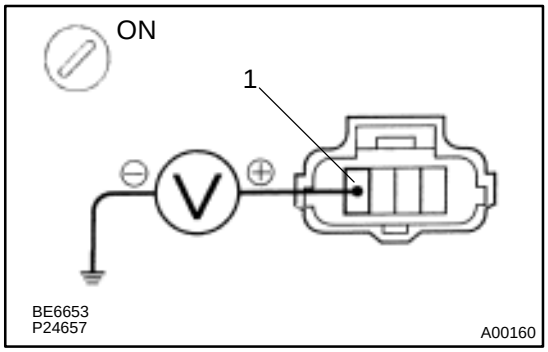

PREPARATION:

(a) Disconnect the throttle position sensor connector.

(b) Turn the ignition switch ON.

CHECK:

Measure the voltage between terminals 1 of wire harness side connector and body ground.

OK:

Voltage: 4.5 – 5.5 V

NG → **Go to step 5.**

OK

3	**Check throttle position sensor (See page SF–38).**

NG → **Replace throttle position sensor.**

OK

4	**Check voltage between terminals VTA and E2 of ECM connector.**

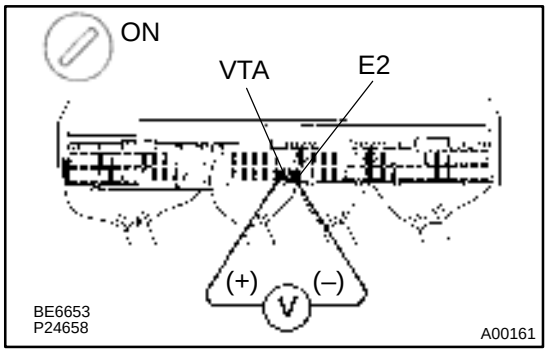

PREPARATION:

(a) Remove the instrument panel speaker No.1 panel (See page SF–63).

(b) Turn the ignition switch ON.

CHECK:

Measure the voltage between terminals VTA and E2 of ECM connector.

OK:

Throttle valve	Voltage
Fully closed	0.3 – 0.8 V
Fully open	3.2 – 4.9 V

NG → **Check for open and short in harness and connector between ECM and throttle position sensor (VTA line) (See page IN–27).**

OK

Check and replace ECM (See page IN–27).

5	**Check voltage between terminals VCC and E2 of ECM connector.**

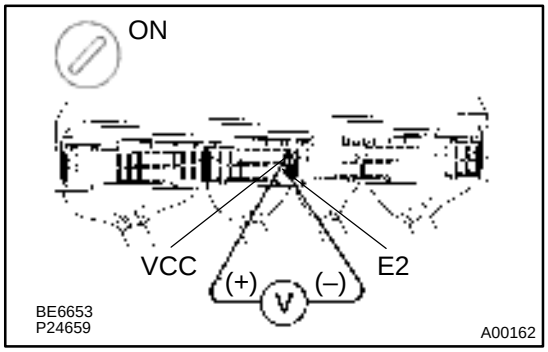

PREPARATION:

(a) Remove the instrument panel speaker No.1 panel (See page SF–63).

(b) Turn the ignition switch ON.

CHECK:

Measure the voltage between terminals VCC and E2 of ECM connector.

OK:

Voltage: 4.5 – 5.5 V

NG → **Check and replace ECM (See page IN–27).**

OK

Check for open in harness and connector between ECM and sensor (VCC line) (See page IN–27).

DI5KV–02

DTC	P0121	Throttle/Pedal Position Sensor/Switch ”A” Circuit Range/Performance Problem

CIRCUIT DESCRIPTION

Refer to DTC P0120 on page DI–35.

DTC No.	DTC Detection Condition	Trouble Area
P0121	After vehicle speed has been exceeded 30 km/h (19 mph) even once, output value of throttle position sensor is out of applicable range while vehicle speed between 30 km/h (19 mph) and 0 km/h (0 mph).	• Throttle position sensor

INSPECTION PROCEDURE

1	**Are there any other codes (besides DTC P0121) being output?**

YES → **Go to relevant DTC chart.**

NO ↓

Replace throttle position sensor.

DI5KX–02

DTC	P0125	Insufficient Coolant Temp. for Closed Loop Fuel Control

CIRCUIT DESCRIPTION

To obtain a high purification rate for the CO, HC and NOx components of the exhaust gas, a three–way catalytic converter is used, but for the most efficient use of the three–way catalytic converter, the air–fuel ratio must be precisely controlled so that it is always close to the stoichiometric air–fuel ratio.
The oxygen sensor has the characteristic where by its output voltage changes suddenly in the vicinity of the stoichiometric air–fuel ratio. This characteristic is used to detect the oxygen concentration in the exhaust gas and provide feedback to the computer for control of the air–fuel ratio.
When the air–fuel ratio becomes LEAN, the oxygen concentration in the exhaust increases and the oxygen sensor informs the ECM of the LEAN condition (small electromotive force: 0 V).
When the air–fuel ratio is RICHER than the stoichiometric air–fuel ratio the oxygen concentration in the exhaust gas in reduced and the oxygen sensor informs the ECM of the RICH condition (large electromotive force: 1V). The ECM judges by the electromotive force from the oxygen sensor whether the air–fuel ratio is RICH or LEAN and controls the injection time accordingly. However, if malfunction of the oxygen sensor causes output of abnormal electromotive force, the ECM is unable to perform accurate air–fuel ratio control.
The heated oxygen sensors include a heater which heats the zirconia element. The heater is controlled by the ECM. When the intake air volume is low (the temp. of the exhaust gas is low) current flows to the heater to heat the sensor for accurate oxygen concentration detection.

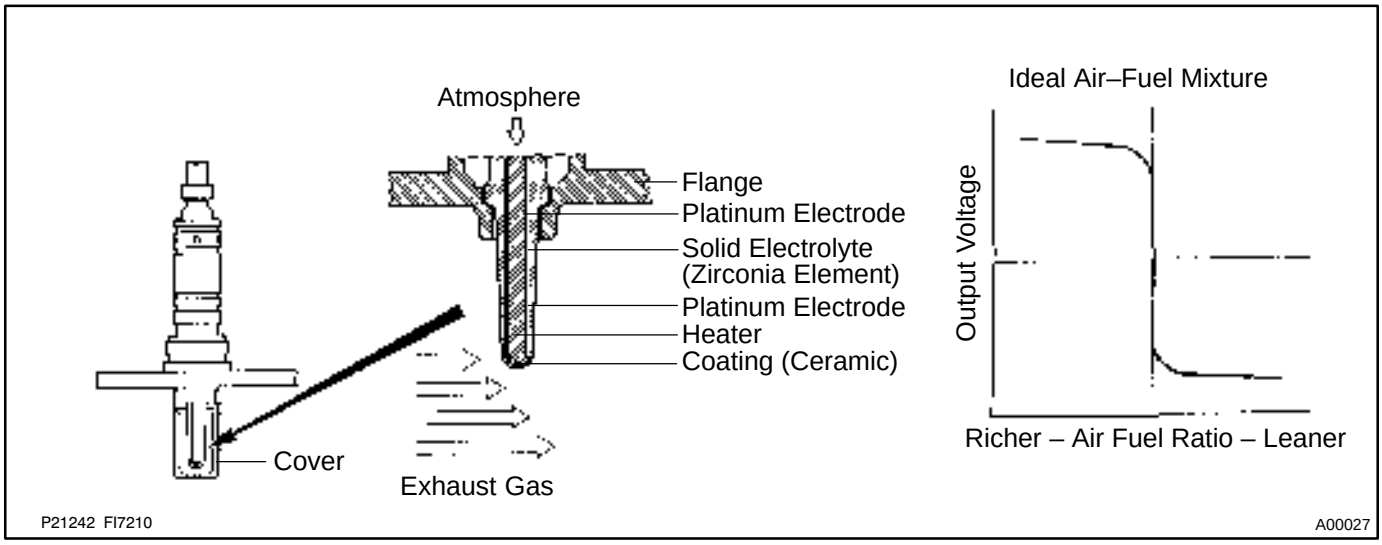

DTC No.	DTC Detection Condition	Trouble Area
P0125	After engine is warmed up, heated oxygen sensor (bank 1 sensor 1) output does not indicate RICH even once when conditions (a), (b) and (c) continue for at least 1.5 min. (a) Engine speed: 1,500 rpm or more (b) Vehicle speed: 40 – 100 km/h (25 – 62 mph) (c) Closed throttle position switch: OFF	• Open or short in heated oxygen sensor (bank 1 sensor 1) circuit • Heated oxygen sensor (bank1 sensor 1)

HINT:
After confirming DTC P0125, use the OBD II scan tool or LEXUS hand−held tester to confirm the voltage output of the heated oxygen sensor (bank 1 sensor 1) from the CURRENT DATA.
If voltage output of the heated oxygen sensor (bank 1 sensor 1) is 0 V, heated oxygen sensor (bank 1 sensor 1) circuit may be open or short.

WIRING DIAGRAM

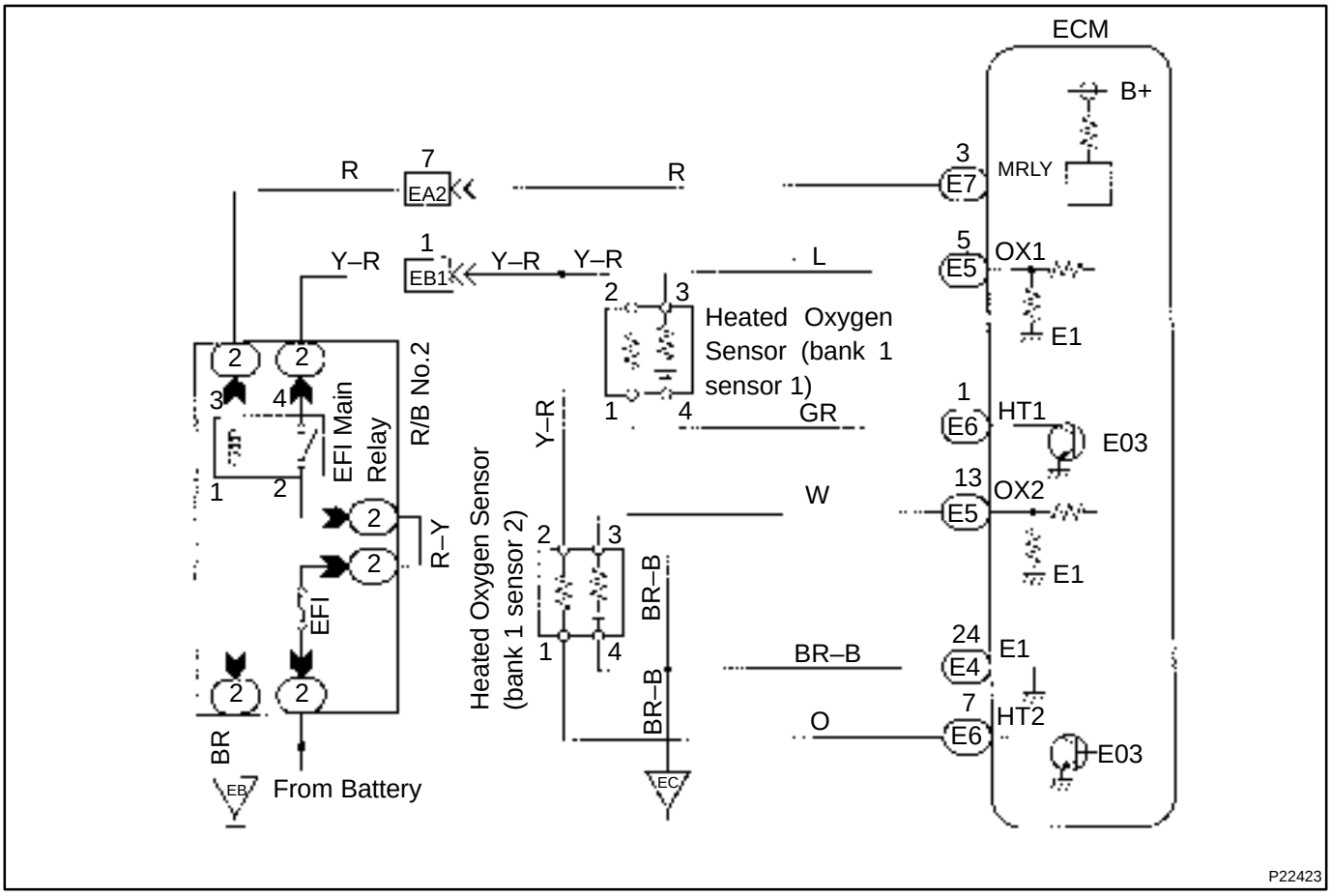

INSPECTION PROCEDURE

1	**Connect OBD II scan tool or LEXUS hand–held tester and read value for voltage output of heated oxygen sensor (bank 1 sensor 1).**

PREPARATION:
(a) Remove the fuse cover on the instrument panel.
(b) Connect the OBD II scan tool or LEXUS hand–held tester to the DLC3.
(c) Warm up the engine to normal operating temperature.

CHECK:
Read the voltage output of heated oxygen sensor (bank 1 sensor 1) when engine is suddenly raced.
HINT:
Perform quick racing to 4,000 rpm 3 times using accelerator pedal.

OK:
Heated oxygen sensor (bank 1 sensor 1) output a RICH signal (0.45 V or more) at least once.

OK	**Check and replace ECM (See page IN–27).**

NG

2	**Check for open and short in harness and connector between ECM and heated oxygen sensor (bank1 sensor 1) (See page IN–27).**

NG → **Repair or replace harness or connector.**

OK

Replace heated oxygen sensor (bank 1 sensor 1).

DI5KZ–02

DTC	P0130	Heated Oxygen Sensor Circuit Malfunction (Bank 1 Sensor 1)

CIRCUIT DESCRIPTION

Refer to DTC P0125 on page DI–40.

DTC No.	DTC Detection Condition	Trouble Area
P0130	Voltage output of heated oxygen sensor (bank 1 sensor 1) remains at 0.4 V or more or 0.55 V or less, during idling after the engine is warmed up (2 trip detection logic)	• Heated oxygen sensor (bank 1 sensor 1) • Fuel trim malfunction

HINT:
Sensor 1 refers to the sensor closer to the engine body.
The heated oxygen sensor's output voltage and the short–term fuel trim value can be read using the OBD II scan tool or LEXUS hand–held tester.

WIRING DIAGRAM

Refer to DTC P0125 on page DI–40.

CONFIRMATION DRIVING PATTERN

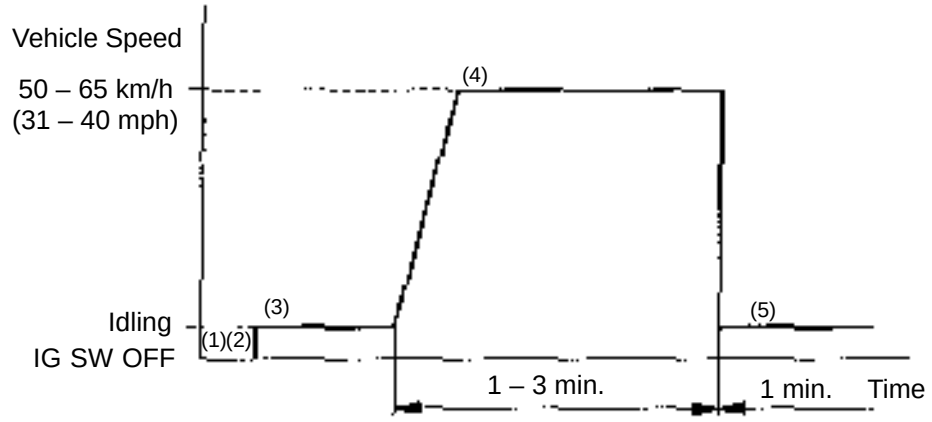

FI7130

(1) Connect the LEXUS hand–held tester to the DLC3.
(2) Switch the LEXUS hand–held tester from the normal mode to the check mode (See page DI–3).
(3) Start the engine and warm it up with all the accessory switches OFF.
(4) Drive the vehicle at 50 – 65 km/h (31 – 40 mph) for 1 – 3 min. to warm up the heated oxygen sensor.
(5) Let the engine idle for 1 min or more.

HINT:
If a malfunction exists, the MIL will light up during step (5).

NOTICE:
If the conditions in this test are not strictly followed, detection of the malfunction will not be possible.
If you do not have a LEXUS hand–held tester, turn the ignition switch OFF after performing steps (3) to (5), then perform steps (3) to (5) again.

INSPECTION PROCEDURE

1	**Check for open and short in harness and connector between ECM and heated oxygen sensor (bank 1 sensor 1) (See page IN–27).**

NG → **Repair or replace harness or connector.**

OK

2	**Check for heated oxygen sensor (bank 1 sensor 1) data.**

PREPARATION:

(a) Remove the fuse cover on the instrument panel.
(b) Connect the OBD II scan tool or LEXUS hand–held tester to the DLC3.
(c) Warm up the engine to normal operating temperature.

CHECK:

Read the heated oxygen sensor (bank 1 sensor 1) output voltage and short–term fuel trim.

RESULT:

Pattern	Heated oxygen sensor (bank 1 sensor 1) output voltage	Short–term fuel trim
1	Lean condition (Changes at 0.55 V or less)	Changes at about +20 %
2	RIch condition (Changes at 0.4 V or more)	Changes at about –20 %
3	Except 1 and 2	

1, 2 → **Check fuel trim system (See page DI–51).**

3

3	**Check the output voltage of heated oxygen sensor (bank 1 sensor 1) during idling.**

PREPARATION:

To warm up the heated oxygen sensor (bank 1 sensor 1), keep the engine at 2,500 rpm for approx. 90 sec.

CHECK:

Use the OBD II scan tool or LEXUS hand–held tester to read the output voltage of the heated oxygen sensor (bank 1 sensor 1) during idling.

OK:

Heated oxygen sensor (bank 1 sensor 1) output voltage:
Alternates repeatedly between less than 0.4 V and more than 0.55 V (See the Following table).

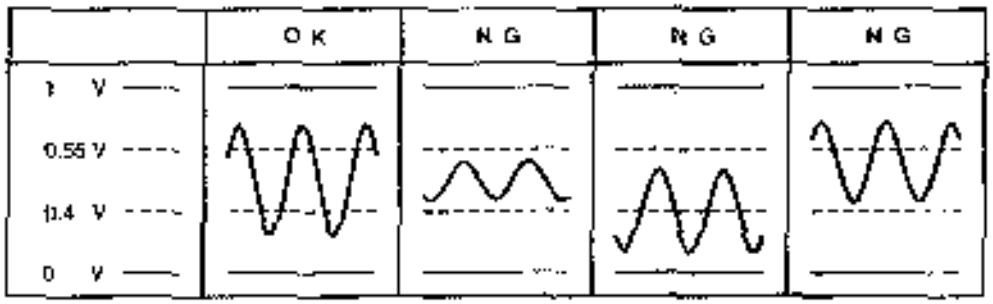

P18349

OK → **Perform confirmation driving pattern (See page DI–102).**

NG

Replace heated oxygen sensor (bank 1 sensor 1).

DI5L1–02

DTC	P0133	Heated Oxygen Sensor Circuit Slow Response (Bank 1 Sensor 1)

CIRCUIT DESCRIPTION

Refer to DTC P0125 on page DI–40.

DTC No.	DTC Detection Condition	Trouble Area
P0133	Response time for the heated oxygen sensor's voltage output to change from rich to lean, or from lean to rich, is 1 sec. or more during idling after the engine is warmed up (2 trip detection logic)	• Heated oxygen sensor (bank 1 sensor 1)

HINT:
Sensor 1 refers to the sensor closer to the engine body.

INSPECTION PROCEDURE

1	**Are there any other codes (besides DTC P0133) being output?**

YES → **Go to relevant DTC chart.**

NO →

Replace heated oxygen sensor (bank 1 sensor 1).

DTC	P0135	Heated Oxygen Sensor Heater Circuit Malfunction (Bank 1 Sensor 1)

DTC	P0141	Heated Oxygen Sensor Heater Circuit Malfunction (Bank 1 Sensor 2)

CIRCUIT DESCRIPTION

Refer to DTC P0125 on page DI–40.

DTC No.	DTC Detection Condition	Trouble Area
P0135 P0141	When heater operates, heater current exceeds 2 A (2 trip detection logic)	• Open or short in heater circuit of heated oxygen sensor • Heated oxygen sensor heater (bank 1 sensor 1, 2) • ECM
	Heater current of 0.25A or less when heater operates (2 trip detection logic)	

HINT:

- Sensor 1 refers to the sensor closer to the engine body.
- Sensor 2 refers to the sensor farther away from the engine body.

WIRING DIAGRAM

Refer to DTC P0125 on page DI–40.

INSPECTION PROCEDURE

1	Check voltage between terminals HT1, HT2 of ECM connector and body ground.

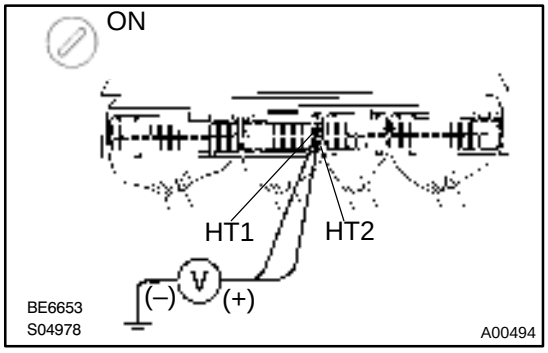

PREPARATION:

(a) Remove the instrument panel speaker No.1 panel (See page SF–63).

(b) Turn the ignition switch ON.

CHECK:

Measure the voltage between terminals HT1, HT2 of ECM connector and body ground.

HINT:

- Connect terminal HT1 to bank 1 sensor 1.
- Connect terminal HT2 to bank 1 sensor 2.

OK:

Voltage: 9 – 14 V

OK	Check and replace ECM (See page IN–27).

NG

2	**Check resistance of heated oxygen sensor (bank 1 sensor 1, 2) heater (See page SF–61).**

NG → **Replace heated oxygen sensor (bank 1 sensor 1, 2).**

OK ↓

Check and repair harness or connector between EFI main relay (Marking: EFI) and heated oxygen sensor (bank 1 sensor 1, 2) and ECM. (See page IN–27).

DI5L4–02

DTC	P0136	Heated Oxygen Sensor Circuit Malfunction (Bank 1 Sensor 2)

CIRCUIT DESCRIPTION

Refer to DTC P0125 on page DI–40.

DTC No.	DTC Detection Condition	Trouble Area
P0136	Voltage output of heated oxygen sensor (bank 1 sensor 2) remains at 0.4 V or more or 0.5 V or less when vehicle is driven at 40 km/h (25 mph) or more after engine is warmed up. (2 trip detection logic).	• Heated oxygen sensor (bank 1 sensor 2)

HINT:
Sensor 2 refers to the sensor farther away from the engine body.

WIRING DIAGRAM

Refer to DTC P0125 on page DI–40.

INSPECTION PROCEDURE

1	**Are there any other codes (besides DTC P0136) being output?**

YES → **Go to relevant DTC chart.**

NO

2	**Check for open and short in harness and connector between ECM and heated oxygen sensor (bank 1 sensor 2) (See page IN–27).**

NG → **Repair or replace harness or connector.**

OK

3	**Check output voltage of heated oxygen sensor (bank 1 sensor 2).**

PREPARATION:

(a) Remove the fuse cover on the instrument panel.
(b) Connect the OBD II scan tool or LEXUS hand–held tester to the DLC3.
(c) Warm up the engine to normal operating temperature.

CHECK:

Read the voltage output of heated oxygen sensor (bank 1 sensor 2) when the engine is suddenly raced.

HINT:
Perform quick racing to 4,000 rpm 3 min. using accelerator pedal.

OK:

Heated oxygen sensor output voltage: Alternates from 0.4 V or less to 0.5 V or more.

OK → **Check that each connector is properly connected.**

NG → **Replace heated oxygen sensor (bank 1 sensor 2).**

DI5L5–02

DTC	P0171	System too Lean (Fuel Trim)

DTC	P0172	System too Rich (Fuel Trim)

CIRCUIT DESCRIPTION

Fuel trim refers to the feedback compensation value compared against the basic injection time. Fuel trim includes short–term fuel trim and long–term fuel trim.

Short–term fuel trim is the short–term fuel compensation used to maintain the air–fuel ratio at its ideal theoretical value. The signal from the heated oxygen sensor indicates whether the air–fuel ratio is RICH or LEAN compared to the ideal theoretical value, triggering a reduction in fuel volume if the air–fuel ratio is rich, and an increase in fuel volume if it is lean.

Long–term fuel trim is overall fuel compensation carried out long–term to compensate for continual deviation of the short–term fuel trim form the central value due to individual engine differences, wear over time and changes in the usage environment.

If both the short–term fuel trim and long–term fuel trim are LEAN or RICH beyond a certain value, it is detected as a malfunction and the MIL lights up.

DTC No.	DTC Detection Condition	Trouble Area
P0171	When air fuel ratio feedback is stable after engine warming up, fuel trim is considerably in error on RICH side. (2 trip detection logic)	• Air intake (hose loose) • Fuel line pressure • Injector blockage, leak • Heated oxygen sensor (bank 1 sensor 1) malfunction • Mass air flow meter • Engine coolant temp. sensor
P0172	When air fuel ratio feedback is stable after engine warming up, fuel trim is considerably in error on LEAN side. (2 trip detection logic)	

HINT:

- When the DTC P0171 is recorded, the actual air–fuel ratio is on the LEAN side. When DTC P0172 is recorded, the actual air–fuel ratio is on the RICH side.
- If the vehicle runs shortage of fuel, the air–fuel ratio is LEAN and DTC P0171 is recorded. The MIL then comes on.
- If the total of the short–term fuel trim value and long–term fuel trim value is within +30 – –35 %, the system is functioning normally.
- If the vehicle runs shortage of fuel, the air–fuel ratio is LEAN and DTC P0171 is recorded. The MIL them come on.

INSPECTION PROCEDURE

1	**Check air induction system (See page DI–21).**

NG → **Repair or replace.**

OK

2	**Check for heated oxygen sensor (bank 1 sensor 1) data.**

PREPARATION:

(a) Remove the fuse cover on the instrument panel.
(b) Connect the OBD II scan tool or LEXUS hand–held tester to the DLC3.
(c) Warm up the engine to normal operating temperature.

CHECK:

Read the heated oxygen sensor (bank 1 sensor 1) output voltage and short–term fuel trim.

RESULT:

Pattern	Heated Oxygen Sensor (Bank 1 Sensor 1) Output Voltage	Short–Term Fuel Trim
1	Lean condition (Changes at 0.55 V or less)	Changes at about +20 %
2	RIch condition (Changes at 0.4 V or more)	Changes at about –20 %
3	Except 1 and 2	

3 → **Check for heated oxygen sensor (bank 1 sensor 1) (See page DI–47).**

1, 2

3	**Check fuel pressure (See page SF–17).**

NG → **Check and repair fuel pump, pressure regulator, fuel pipe line and filter (See page SF–6).**

OK

4	**Check injector injection (See page SF–20).**

NG → **Replace injector.**

OK

5	**Check mass air flow meter and engine coolant temp. sensor (See page SF–34, SF–58).**

NG → **Repair or replace.**

OK

6	Check for spark and ignition (See page IG–1).

NG → Repair or replace.

OK

Check and replace ECM (See page IN–27).

DI7KF–01

DTC	P0300	Random/Multiple Cylinder Misfire Detected

DTC	P0301	Cylinder 1 Misfire Detected

DTC	P0302	Cylinder 2 Misfire Detected

DTC	P0303	Cylinder 3 Misfire Detected

DTC	P0304	Cylinder 4 Misfire Detected

DTC	P0305	Cylinder 5 Misfire Detected

DTC	P0306	Cylinder 6 Misfire Detected

CIRCUIT DESCRIPTION

Misfire: The ECM uses the crankshaft position sensor and camshaft position sensor to monitor changes in the crankshaft rotation for each cylinder.
The ECM counts the number of times the engine speed change rate indicates that misfire has occurred. And when the misfire rate equals or exceeds the count indicating that the engine condition has deteriorated, the MIL lights up.
If the misfire rate is high enough and the driving conditions will cause catalyst overheating, the MIL blinks when misfiring occurs.

DTC No.	DTC Detection Condition	Trouble Area
P0300	Misfiring of random cylinders is detected during any particular 200 or 1,000 revolutions	• Ignition system • Injector • Fuel line pressure • EGR • Compression pressure • Valve clearance not to specification • Valve timing • Mass air flow meter • Engine coolant temp. sensor
P0301 P0302 P0303 P0304 P0305 P0306	For any particular 200 revolutions of engine, misfiring is detected which can cause catalyst overheating (This causes MIL to blink)	
	For any particular 1,000 revolutions of engine, misfiring is detected which causes a deterioration in emissions (2 trip detection logic)	

HINT:
When the 2 or more codes for a misfiring cylinder are recorded repeatedly but no random misfire code is recorded, it indicates that the misfires were detected and recorded at different times.

WIRING DIAGRAM

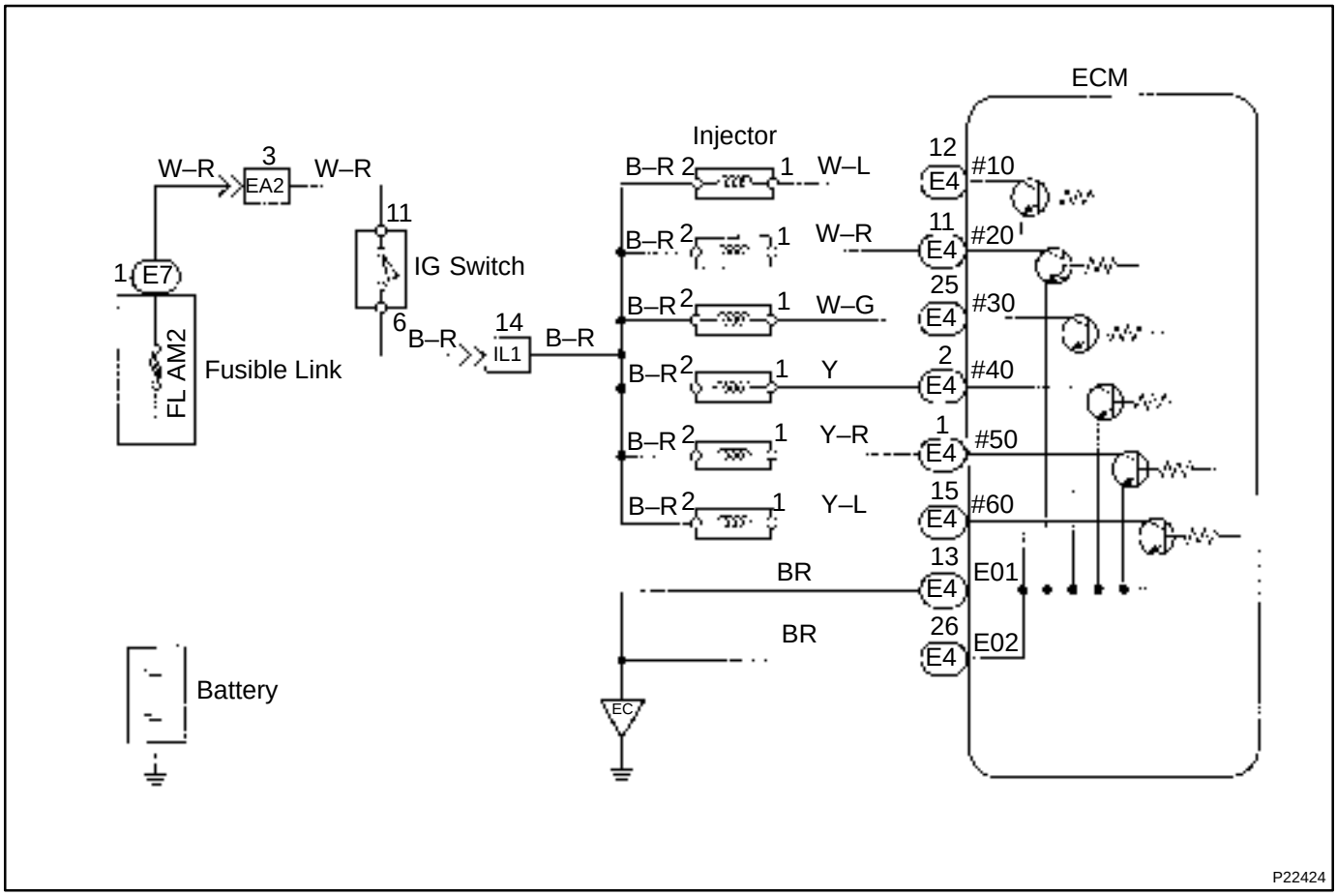

Reference INSPECTION USING OSCILLOSCOPE
INJECTOR SIGNAL WAVEFORM

With the engine idling, measure the voltage between terminals #10 – #60 and E01 of ECM.

HINT:

The correct waveform is as shown.

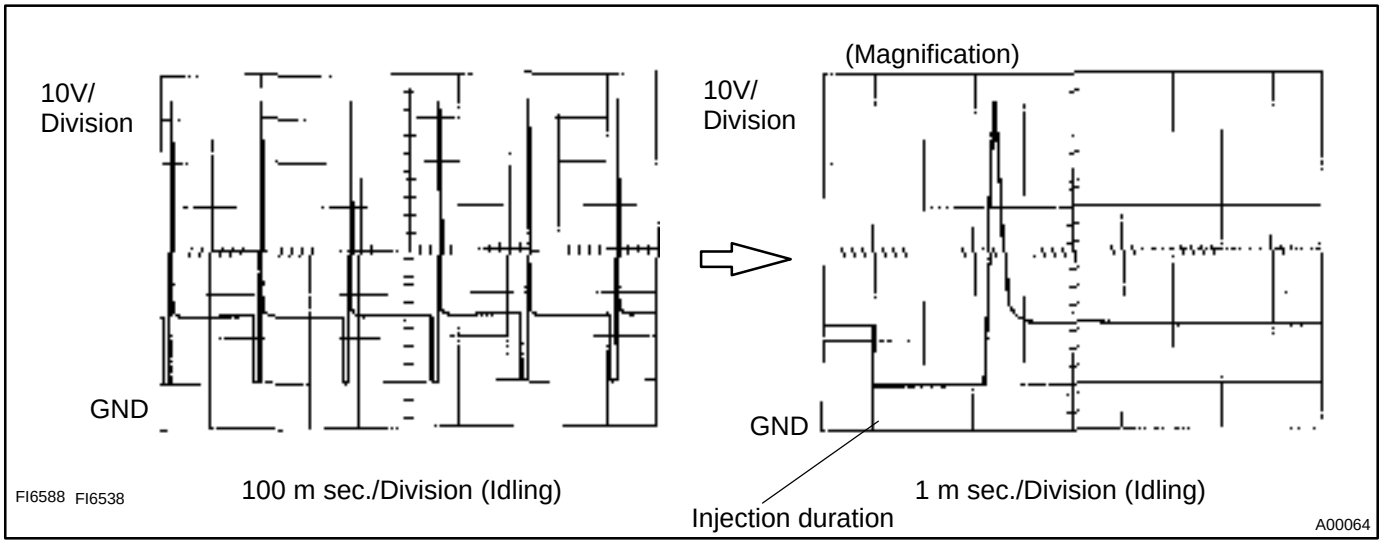

INSPECTION PROCEDURE

1	**Check spark plug and spark of misfiring cylinder (See page IG–1).**

NG → **Replace or check ignition system (See page IG–1).**

OK

2	**Check voltage of ECM terminal for injector of failed cylinder.**

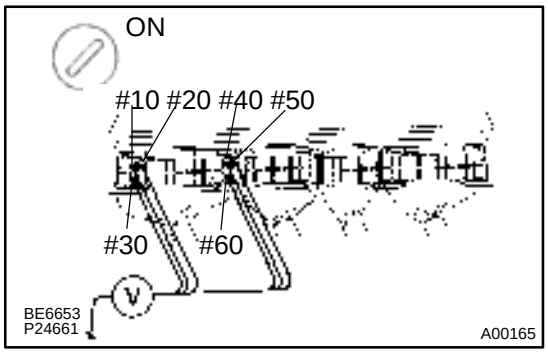

PREPARATION:

(a) Remove the instrument panel speaker No.1 panel (See page SF–63).

(b) Turn the ignition switch ON.

CHECK:

Measure the voltage between applicable terminal of ECM connector and body ground.

OK:

Voltage: 9 – 14 V

OK → **Go to step 4.**

NG

3	**Check of injector of misfiring cylinder (See page SF–20).**

NG → **Replace injector.**

OK

Check for open and short in harness and connector between injector and ECM (See page IN–27).

4	Check fuel pressure (See page SF–17).

NG → Check and repair fuel pump, pressure regulator, fuel pipe line and filter (See page SF–6).

OK

5	Check injector injection (See page SF–20).

NG → Replace injector.

OK

6	Check EGR system (See page EC–10).

NG → Repair EGR system.

OK

7	Check mass air flow meter and engine coolant temp. sensor (See page SF–34, SF–58).

NG → Repair or replace.

OK

Check compression pressure (See page EM–3), valve clearance (See page EM–4) and valve timing (See page EM–21).

DI5L9–02

DTC	P0325	Knock Sensor 1 Circuit Malfunction

DTC	P0330	Knock Sensor 2 Circuit Malfunction

CIRCUIT DESCRIPTION

Knock sensors are fitted one each to the front and rear of the left side of the cylinder block to detect engine knocking. This sensor contains a piezoelectric element which generates a voltage when it becomes deformed, which occurs when the cylinder block vibrates due to knocking. If engine knocking occurs, ignition timing is retarded to suppress it.

DTC No.	DTC Detection Condition	Trouble Area
P0325	No knock sensor 1 signal to ECM with engine speed, between 1,800 rpm and 5.200	• Open or short in knock sensor 1 circuit • Knock sensor 1 (looseness) • ECM
P0330	No knock sensor 2 signal to ECM with engine speed, between 1,800 rpm and 5.200	• Open or short in knock sensor 2 circuit • Knock sensor 2 (looseness) • ECM

If the ECM detects the above DTCs, it operates the fail safe function in which the corrective retard angle value is set to the maximum value.

WIRING DIAGRAM

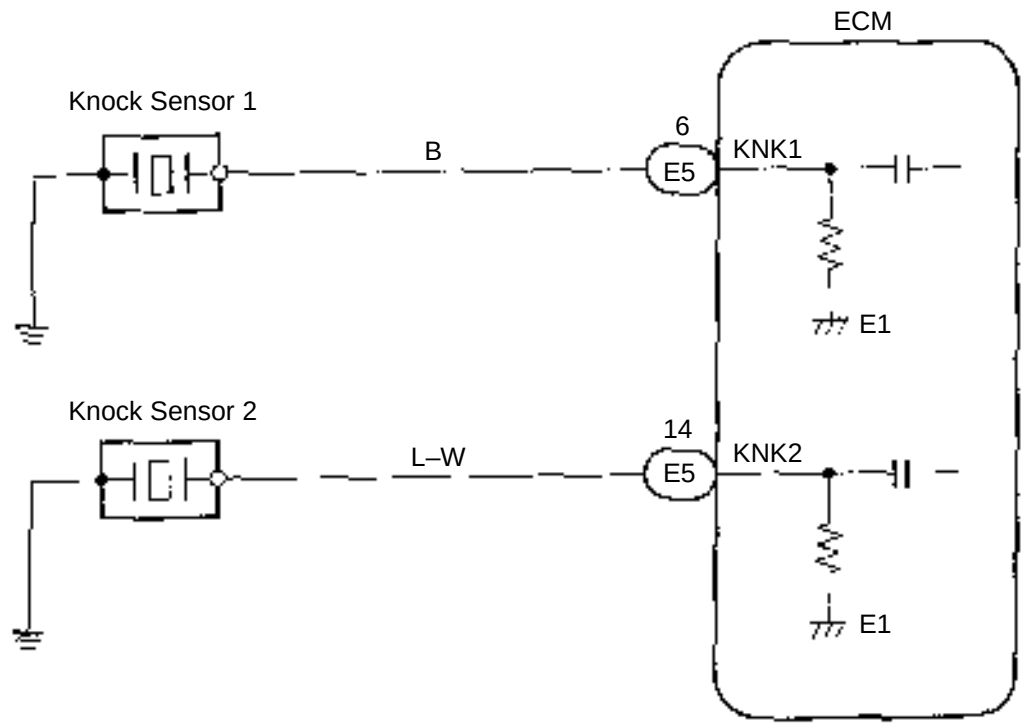

P22425

INSPECTION PROCEDURE

HINT:

- DTC P0325 is for the knock sensor circuit on the front side.
- DTC P0330 is for the knock sensor circuit on the rear side.

1	**Check continuity between terminal KNK1, KNK2 of ECM connector and body ground.**

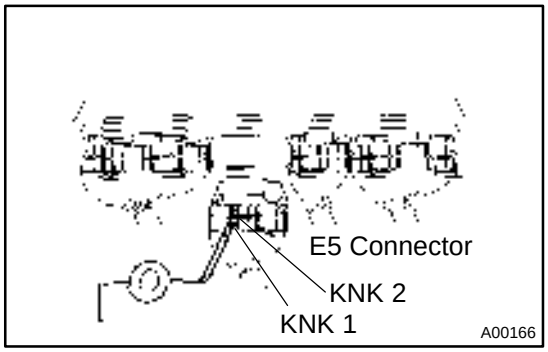

PREPARATION:

(a) Remove the instrument panel speaker No,1 panel (See page SF–63).

(b) Disconnect the E5 connector of ECM.

CHECK:

Measure the resistance between terminal KNK1, KNK2 of ECM connector and body ground.

HINT:

- Connect terminal KNK1 to knock sensor 1.
- Connect terminal KNK2 to knock sensor.

OK:

Resistance: 1 MΩ or higher

OK → **Go to step 3.**

NG

2	**Check knock sensor (See page SF–59).**

NG → **Replace knock sensor.**

OK

3	**Check for open and short in harness and connector between ECM and knock sensor (See page IN–27).**

NG → **Repair or replace harness or connector.**

OK

4	Does malfunction disappear when a good knock sensor is installed?

YES → **Replace knock sensor.**

NO →

Check and replace ECM (See page IN–27).

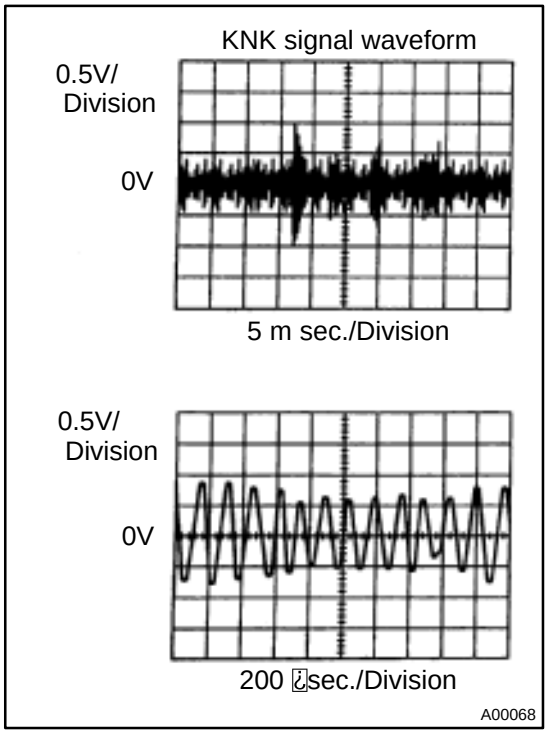

Reference: INSPECTION USING OSCILLOSCOPE

- With the engine racing (4,000 rpm) measure between terminal KNK1, KNK2 of ECM and body ground.

HINT:
The correct waveform is as shown.

- Spread the time on the horizontal axis, and confirm that period of the wave is 164 μ sec.
  (Normal mode vibration frequency of knock sensor: 6.1 kHz).

HINT:
If normal mode vibration frequency is not 6.1 kHz the sensor is malfunctioning.

DI7KG–01

DTC	P0335	Crankshaft Position Sensor ”A” Circuit Malfunction

CIRCUIT DESCRIPTION

The crankshaft position sensor (NE signal) consists of a signal plate and pick up coil. The NE signal plate has 24 teeth and is built into the distributor. When the camshaft rotates, the protrusion on the signal plate and the air gap on the pick up coil change, causing fluctuations in the magnetic field and generating an electromotive force in the pick up coil. The NE signal sensor generates 24 signals for every engine revolution. The ECM detects the standard crankshaft angle based on the G1, G2 signals, detects the actual crankshaft angle and the engine speed by the NE signals, and detects misfire by NE2 signals.

DTC No.	DTC Detection Condition	Trouble Area
P0335	No crankshaft position sensor signal (NE signal) to ECM during cranking. (2 trip detection logic)	• Open or short in crankshaft position sensor circuit for NE signal. • Crankshaft position sensor for NE signal • Starter • ECM
	No crankshaft position sensor signal (NE signal) to ECM with engine speed 550 rpm or more (2 trip detection logic)	

WIRING DIAGRAM

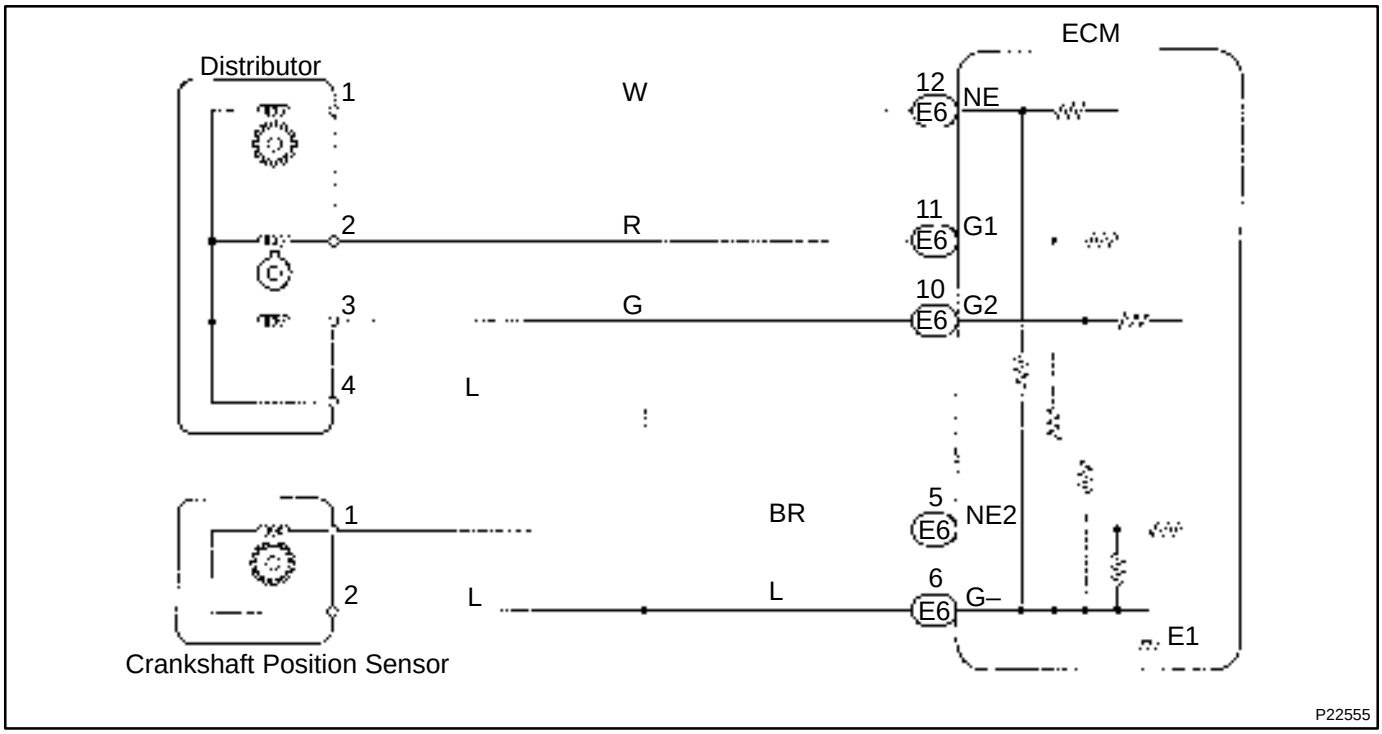

INSPECTION PROCEDURE

1	**Check resistance of crankshaft position sensor for NE signal (See page IG–1).**

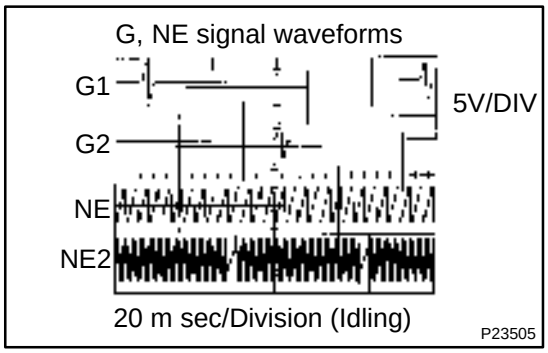

Reference: INSPECTION USING OSCILLOSCOPE
During cranking or idling, check between terminals G1, G2, NE, NE2 and G– of ECM.
HINT:
The correct waveforms are as shown.

NG → **Replace distributor housing.**

OK

2	**Check for open and short in harness and connector between ECM and crankshaft position sensor for NE signal (See page IN–27).**

NG → **Repair or replace harness or connector.**

OK

3	**Check air gap (See page IG–6).**

NG → **Replace distributor housing assembly.**

OK

Check and replace ECM (See page IN–27).

DI7KH–01

DTC	P0340	Camshaft Position Sensor Circuit Malfunction

CIRCUIT DESCRIPTION

The camshaft position sensors (G1 and G2 signals) consist of a signal plate and a pick up coil. The G1, G2, signal plates each have one tooth on the outer circumference and are built into the distributor. When the camshaft rotates, the protrusion on the signal plate and the air gap on the pick up coil change, causing fluctuations in the magnetic field and generating an electromotive force in the pick up coil. The ECM detects the standard crankshaft angle based on the G1, G2 signals, detects the actual crankshaft angle and engine speed by the NE signals, and detects misfire by NE2 signals.

DTC No.	DTC Detection Condition	Trouble Area
P0340	No camshaft position sensor signal (G signal) to ECM with engine speed 550 rpm or more.	• Open or short in camshaft position sensor circuit • Camshaft position sensor • ECM

WIRING DIAGRAM

Refer to DTC P0335 on page DI–61.

INSPECTION PROCEDURE

1	**Check resistance of camshaft position sensor (See page IG–10).**

Reference: INSPECTION USING OSCILLOSCOPE

Refer to page DI–61 for Reference INSPECTION USING OSCILLOSCOPE.

NG → **Replace distributor housing assembly.**

OK

2	**Check for open and short in harness and connector between ECM and camshaft position sensor (See page IN–27).**

NG → **Repair or replace harness or connector.**

OK

3	**Check air gap (See page IG–6).**

NG → **Replace distributor housing assembly.**

OK

Check and replace ECM (See page IN–27).

DTC	P0385	Crankshaft Position Sensor ”B” Circuit Malfunction

CIRCUIT DESCRIPTION

The crankshaft position sensor (NE2 signal) consists of a signal plate and a pick up coil. The NE2 signal plate has 34 teeth and is mounted on the crankshaft. When the crankshaft rotates, the protrusion on the signal plate and the air gap on the pick up coil change, causing fluctuations in the magnetic field and generating an electromotive force in the pick up coil. The NE2 signal sensor generates 34 signals for every engine revolution. The ECM detects the standard crankshaft angle based on G1, G2 signals detects the actual crankshaft angle and the engine speed by NE signals, and detects misfire by NE2 signals.

DTC No.	DTC Detection Condition	Trouble Area
P0385	No crankshaft position sensor signal (NE 2 signal) to ECM with engine speed 550 rpm or more. (2trip detection logic)	• Open or short in crankshaft position sensor for NE2 signals. • Crankshaft position sensor for NE2 signal. • ECM

WIRING DIAGRAM

Refer to DTC 0335 on page DI–61.

INSPECTION PROCEDURE

1	Check resistance of camshaft position sensor for NE2 signal.

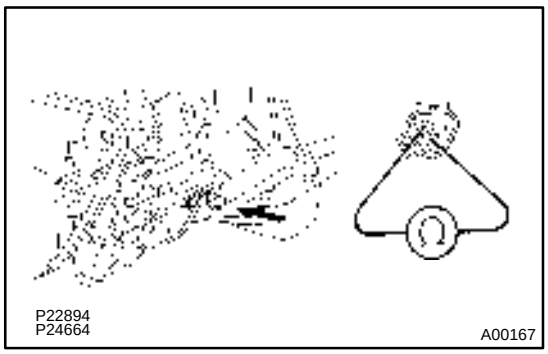

PREPARATION:

Disconnect crankshaft position sensor connector.

CHECK:

Measure the resistance between terminals 1 and 2 of crankshaft position sensor connector.

OK:

	Resistance
Cold	1630 ~ 2740 Ω
Hot	2065 ~ 3225 Ω

”Cold” is from –10˚C (14˚F) to 50˚C (122˚F) of engine coolant temperature and ”Hot” is from 50˚C (122˚F) to 100˚C(212˚F).

Reference: INSPECTION USING OSCILLOSCOPE

Refer to page DI–61.

NG → **Replace crankshaft position sensor.**

OK

2	**Check for open and short in harness and connector between ECM and crankshaft position sensor for NE2 signal (See page IN–27).**

NG → **Repair or replace harness or connector.**

OK

3	**Inspect sensor installation and teeth of signal plate.**

NG → **Tighten the sensor.**
Replace signal plate.

OK

Check and replace ECM (See page IN–27).

DTC	P0401	Exhaust Gas Recirculation Flow Insufficient Detected

CIRCUIT DESCRIPTION

The EGR system recirculates exhaust gas, which is controlled to the proper quantity to suit the driving conditions, into the intake air mixture to slow down combustion, reduce the combustion temp. and reduce NOx emissions. The amount of EGR is regulated by the EGR vacuum modulator according to the engine load.

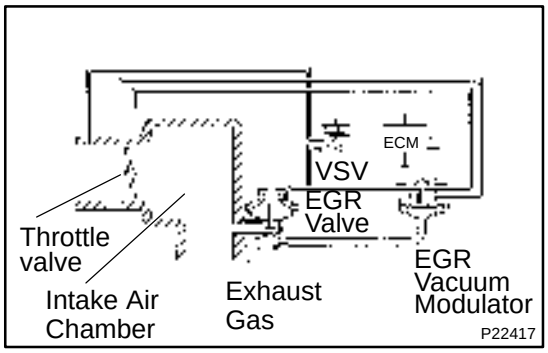

If even one of the following conditions is fulfilled, the VSV is turned ON by a signal from the ECM.
This results in atmospheric air acting on the EGR valve, closing the EGR valve and shutting off the exhaust gas (EGR cut–off).
Under the following conditions, EGR is cut to maintain driveability.

- Before the engine is warmed up.
- During deceleration (throttle valve closed).
- Light engine load (amount of intake air very small).
- Engine racing.

DTC No.	DTC Detection Condition	Trouble Area
P0401	After engine is warmed up and run at 80 km/h (50 mph) for 3 to 5 min., EGR gas temperature sensor value does not exceed 38 ˚C (100.4 ˚F) above ambient air temperature. (2 trip detection logic)	• EGR valve stuck closed • Short in VSV circuit for EGR • Open in EGR gas temp. sensor circuit • EGR hose disconnected • ECM

WIRING DIAGRAM

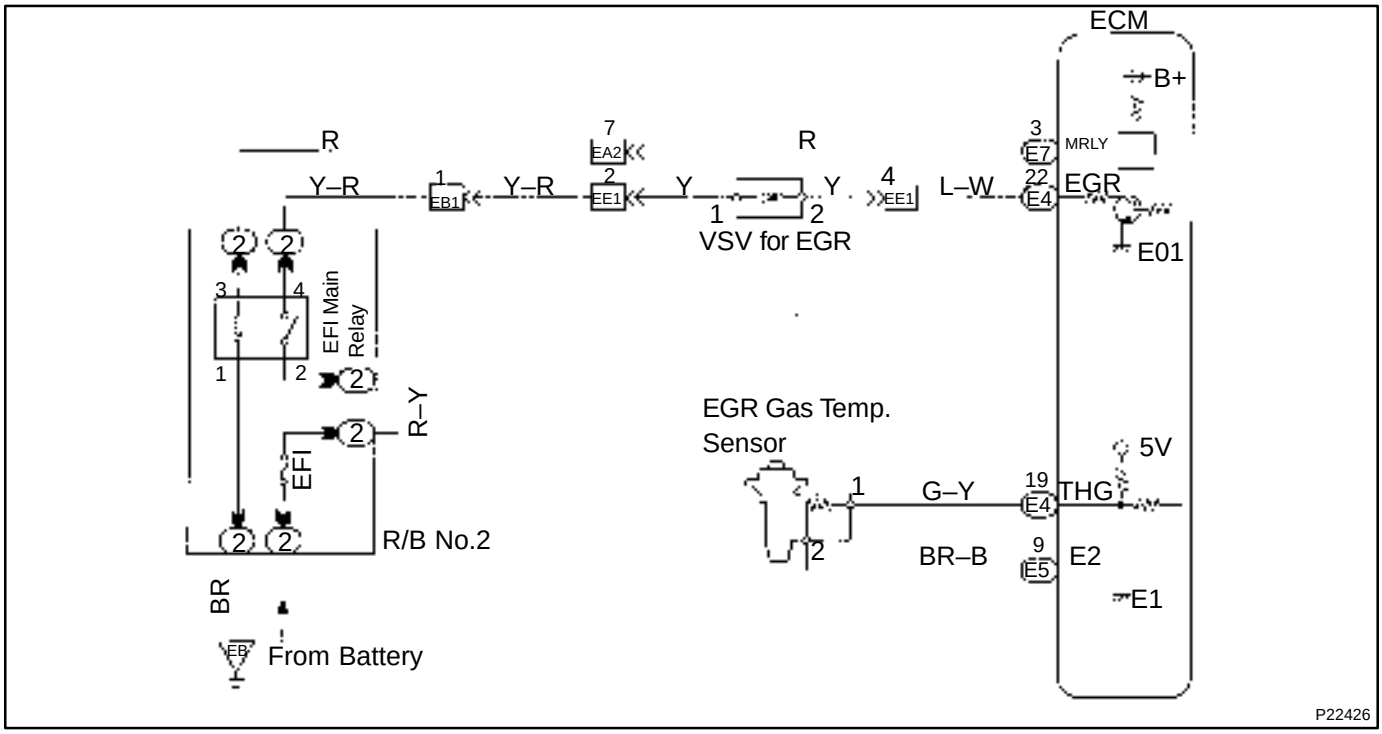

SYSTEM CHECK DRIVING PATTERN

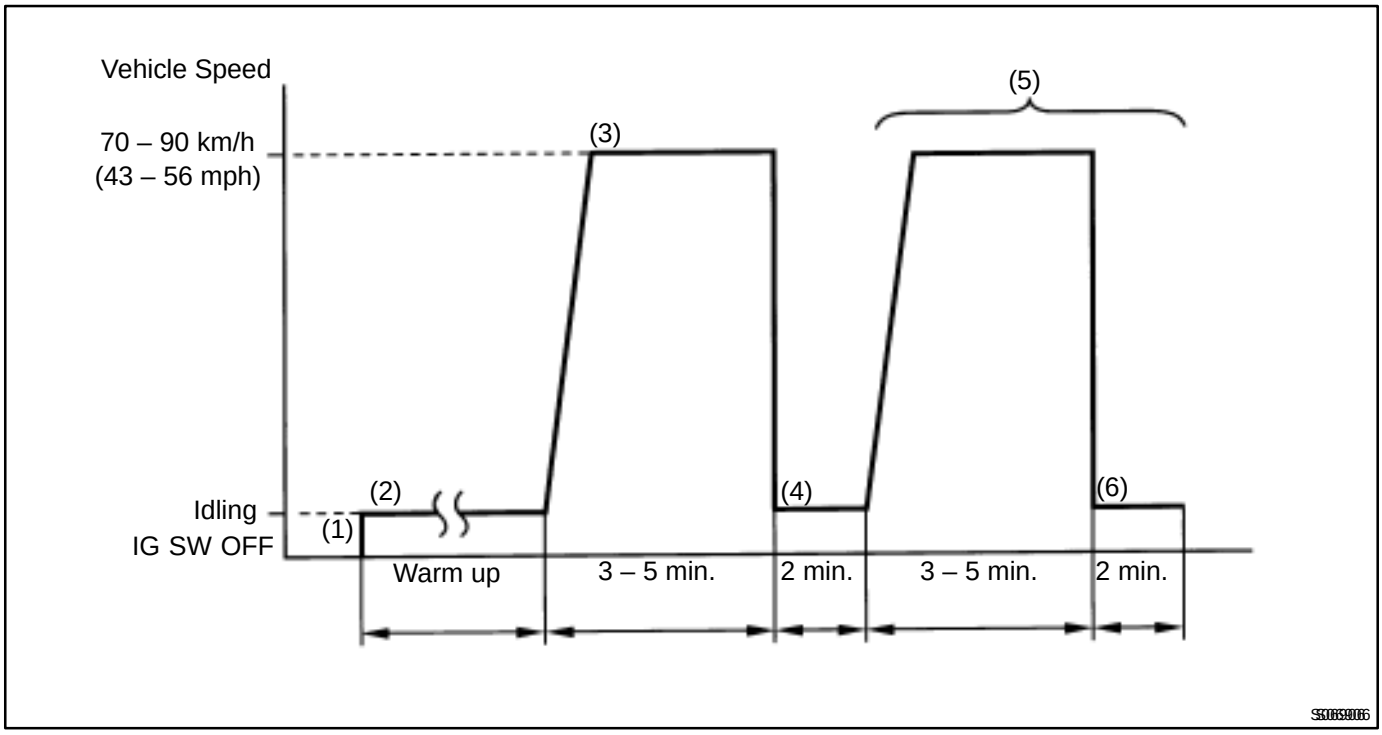

(1) Connect the OBD II scan tool or LEXUS hand–held tester to the DLC3.
(2) Start and warm up the engine with all accessories switched OFF.
(3) Run the vehicle at 70 ~ 90 km/h (43 ~ 56 mph) for 3 min. or more.
(4) Idle the engine for about 2 min.
(5) Do steps (3) and (4) again.
(6) Check the READINESS TESTS mode on the OBD II scan tool or LEXUS hand–held tester.

If COMPL is displayed and the MIL does not light up, the system is normal.
If INCMPL is displayed and the MIL does not light up, run the vehicle step (6) for some times and check it.
HINT:
INCMPL is displayed when either condition (a) or (b) exists.
(a) The system check is incomplete.
(b) There is a malfunction in the system.
If there is a malfunction in the system, the MIL will light up after steps (2) to (5) above are done again.

INSPECTION PROCEDURE
LEXUS hand–held tester:

1	**Connect LEXUS hand–held tester and read value of EGR gas temp. value.**

PREPARATION:
(a) Remove the fuse cover on the instrument panel.
(b) Connect the LEXUS hand–held tester to the DLC3.
(c) Turn the ignition switch ON and push the LEXUS hand–held tester main switch ON.

CHECK:
Read the EGR gas temperature on the LEXUS hand–held tester.
OK:
EGR gas temperature: 10˚C (50˚F) or more
HINT:
If there is an open circuit, the LEXUS hand–held tester indicates 3.1˚C (37.6˚F).

OK → **Go to step 4.**

NG

2	**Check for open in harness or ECM.**

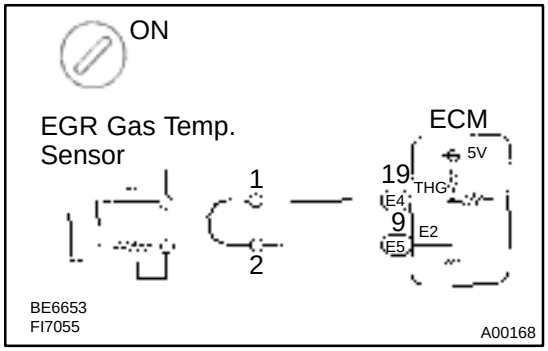

PREPARATION:
(a) Disconnect the EGR gas temp. sensor connector.
(b) Connect sensor wire harness terminals together.
(c) Turn the ignition switch ON.
CHECK:
Read the EGR gas temperature on the LEXUS hand–held tester.
OK:
EGR gas temperature: Approx. 157.5˚C (315.5˚F)

OK → **Confirm good connection at sensor.If OK, replace EGR gas temp. sensor.**

NG

3	**Check for open in harness or ECM.**

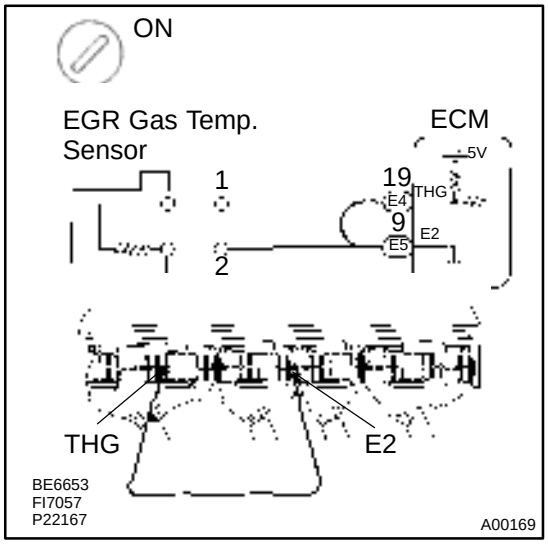

PREPARATION:
(a) Remove the instrument panel speaker No.1 panel (See page SF–63).
(b) Connect between terminals THG and E2 of ECM connector.
HINT:
The EGR gas temperautre sensor connector is disconnected. Before checking, do a visual check and contact pressure check for the ECM connector (See page IN–27).
CHECK:
Read the EGR gas temperature on the LEXUS hand–held tester.

OK:

EGR gas temperature: Approx. 157.5˚C (315.5˚F)

OK	**Open in harness between terminals E2 or THG. Repair or replace harness.**

NG

Confirm connection at ECM. If OK, replace ECM.

4	**Check connection of vacuum hose, EGR hose (See page EC–2).**

NG	**Repair or replace.**

OK

5	**Check VSV for EGR.**

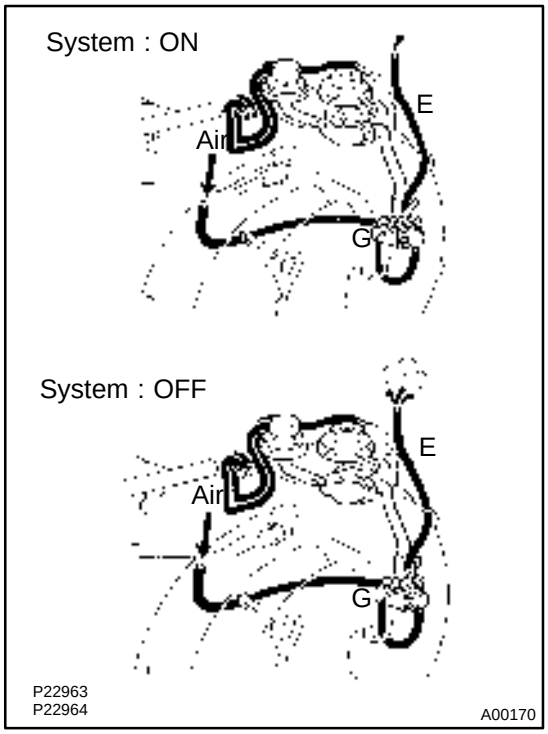

PREPARATION:

(a) Remove the fuse cover on the instrument panel.
(b) Connect the LEXUS hand–held tester to the DLC3.
(c) Turn the ignition switch ON and push the LEXUS hand–held tester main switch ON.
(d) Select the ACTIVE TEST mode on the LEXUS hand–held tester.

CHECK:

Check operation of VSV, When it is operated by the LEXUS hand–held tester.

OK:

EGR system is ON:
Air does not flow from pipe G to pipe E.
EGR system is OFF:
Air from pipe G is flowing out through pipe E.

OK	**Go to step 7.**

NG

6	**Check operation of VSV for EGR (See page SF–57).**

NG → **Replace VSV for EGR.**

OK

Check for open in harness and connector between VSV and ECM (See page IN–27).

7	**Check EGR vacuum modulator (See page EC–10).**

NG → **Repair or replace.**

OK

8	**Check EGR valve (See page EC–10).**

NG → **Repair or replace.**

OK

9	**Check value of EGR gas temp. sensor.**

PREPARATION:

(a) Remove the fuse cover on the instrument panel.
(b) Connect the LEXUS hand–held tester to the DLC3.
(c) Turn the ignition switch ON and push the LEXUS hand–held tester main switch ON.
(d) Select the ACTIVE TEST mode on the LEXUS hand–held tester (EGR system ON).
(e) Race the engine at 4,000 rpm for 3 mins.

CHECK:

Measure the EGR gas temperature while racing engine at 4,000 rpm.

OK:

EGR gas temperature after 3 mins.: 140˚C (284˚F) or more

NG → **Replace EGR gas temp. sensor.**

OK

Check and replace ECM (See page IN–27).

OBD II scan tool (excluding LEXUS hand–held tester):

1	**Check resistance of EGR gas temp. sensor.**

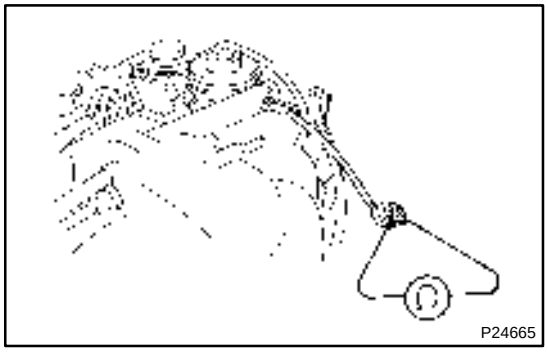

PREPARATION:
Disconnect the EGR gas temperature sensor connector.
CHECK:
Measure the resistance between terminals of EGR gas temperature sensor connector.
OK:
Resistance: 600 kΩ or less
HINT:
If there is open circuit, ohmmeter indicates 720 kΩ or more.

NG → **Check and replace EGR gas temp. sensor (See page SF–60).**

OK

2	**Check for open in harness or ECM.**

PREPARATION:
(a) Disconnect the EGR gas temp. sensor connector.
(b) Turn the ignition switch ON.
CHECK:
Measure the voltage between terminals of EGR gas temperature sensor wire harness side connector.
OK:
Voltage: 4.5 – 5.5 V

OK → **Go to step 4.**

NG

3	Check for open in harness or ECM.

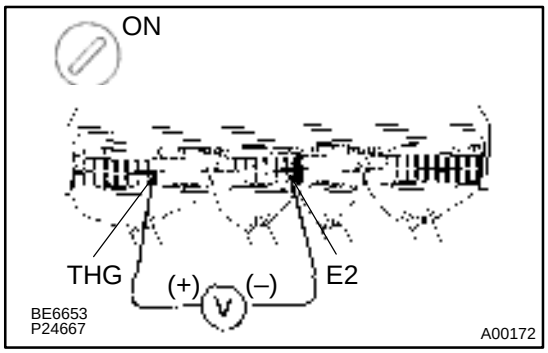

PREPARATION:

(a) Remove the instrument panel speaker No.1 panel (See page SF–63).

(b) Turn the ignition switch ON.

CHECK:

Measure the voltage between terminals of THG and E2 of ECM connector.

HINT:

EGR gas temperature sensor connector is disconnected.

OK:

Voltage: 4.5 – 5.5 V

OK → **Open in harness between terminals E2 or THG. Repair or replace harness.**

NG

Confirm connection at ECM.
If OK, replace ECM.

4	Check connection of vacuum hose, EGR hose (See page EC–2).

NG → **Repair or replace.**

OK

5	Check for VSV for EGR.

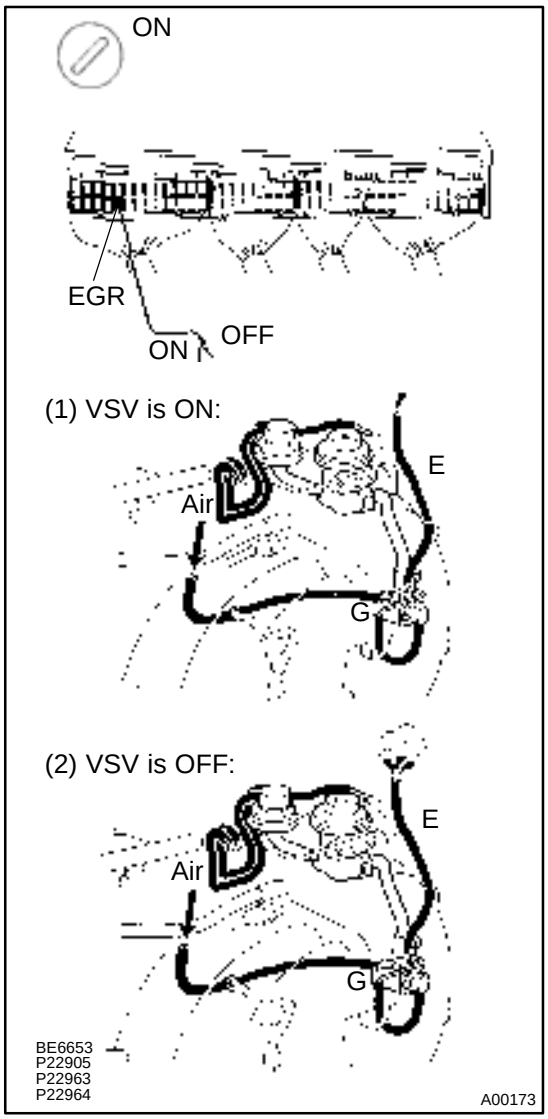

PREPARATION:

(a) Remove the instrument panel speaker No.1 panel (See page SF–63).

(b) Turn the ignition switch ON.

CHECK:

Check VSV function

(1) Connect between terminal EGR of ECM and body ground (ON).

(2) Disconnect between terminal EGR of ECM and body ground (ON).

OK:

(1) VSV is ON:
Air does not flow from pipe G to pipe E.
(2) VSV is OFF:
Air from pipe G flows out through pipe E.

OK → **Go to step 7.**

NG

6	Check operation for the VSV for EGR (See page SF–57).

NG → **Replace VSV for EGR.**

OK

Check for open in harness and connector between R/B No.2 and ECM (See page IN–27).

7	**Check EGR vacuum modulator (See page EC–10).**

NG → **Repair or replace.**

OK

8	**Check EGR valve (See page EC–10).**

NG → **Repair or replace.**

OK

9	**Check resistance of EGR gas temp. sensor.**

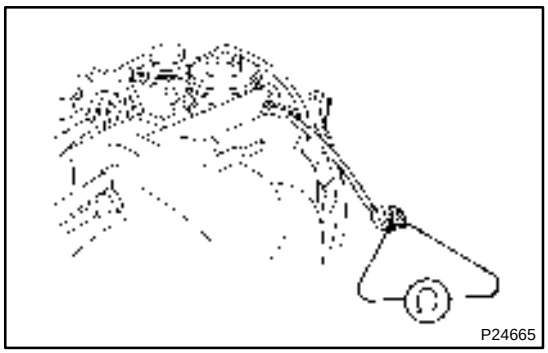

PREPARATION:

(a) Disconnect the EGR gas temperature sensor connector.
(b) Start the engine and warm it up.
(c) Disconnect the VSV connector for EGR.
(d) Race the engine at 4,000 rpm or 3 mins.

CHECK:

Measure the resistance of the EGR gas temperature sensor while racing the engine at 4,000 rpm.

OK:

Resistance of EGR gas temp. sensor after 3 mins.: 4.3 kΩ or less

HINT:
At 20˚C (68˚F): 188.6 – 439.0 kΩ for resistance

NG → **Replace EGR gas temp. sensor.**

OK

Check and replace ECM (See page IN–27).

DI5LE–02

DTC	P0402	Exhaust Gas Recirculation Flow Excessive Detected

CIRCUIT DESCRIPTION

Refer to DTC P0401 on page DI–67.

DTC No.	DTC Detection Condition	Trouble Area
P0402	EGR gas temp. sensor value is high during EGR cut–off when engine is cold (Race engine at about 4.000rpm without load so that vacuum is applied to port E) (2 trip detection logic)	• EGR valve stuck open • EGR VSV open malfunction • Open in VSV circuit for EGR • Short in EGR gas temp. sensor circuit • ECM
	EGR valve is always open (2 trip detection logic)	

COMFIRMATION DRIVING PATTERN

Refer to DTC P0401 on page DI–67.

WIRING DIAGRAM

Refer to DTC P0401 on page DI–67.

INSPECTION PROCEDURE

LEXUS hand–held tester:

1	**Connect LEXUS hand–held tester and read EGR gas temp. value.**

PREPARATION:

(a) Remove the fuse cover on the instrument panel.
(b) Connect the LEXUS hand–held tester to the DLC3.
(c) Turn the ignition switch ON and push the LEXUS hand–held tester main switch ON.

CHECK:

Read the EGR gas temperature on the LEXUS hand–held tester.

OK:

EGR gas temperature: 150˚C (302˚F) or less (Not immediately after driving)

HINT:

If there is a short circuit, the LEXUS hand–held tester indicates Approx. 157.6˚C (315.5˚F).

OK → **Go to step 4.**

NG

2	Check for short in harness and ECM.

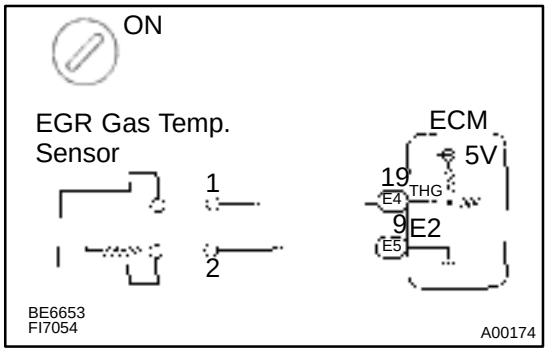

PREPARATION:
Disconnect the EGR gas temperature sensor connector.
CHECK:
Read the EGR gas temperature on the LEXUS hand–held tester.
OK:
EGR gas temperature: 3.1˚C (37.6˚F)

OK → **Replace EGR gas temp. sensor.**

NG

3	Check for short in harness or ECM.

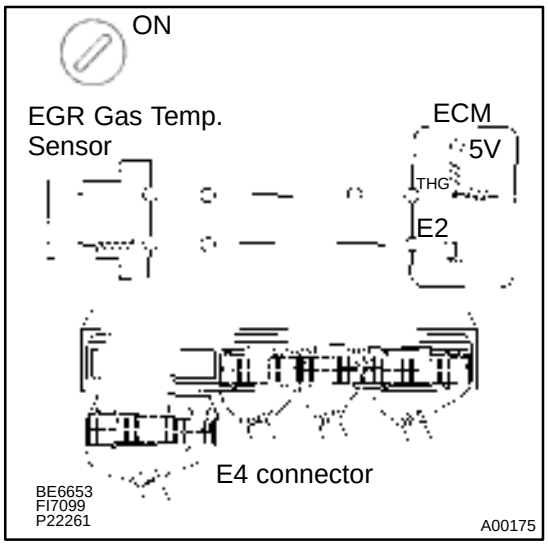

PREPARATION:
(a) Remove the instrument panel speaker No.1 panel (See page SF–63).
(b) Disconnect the E4 connector of ECM.
HINT:
EGR gas temperature sensor is disconnected.
CHECK:
Read EGR gas temperature on the LEXUS hand–held tester.
OK:
EGR gas temperature: 3.1˚C (37.6˚F)

OK → **Repair or replace harness or connector.**

NG

Check and replace ECM (See page IN–27).

4	**Check for VSV for EGR (See page DI–67).**

OK → **Check EGR valve (See page EC–10).**

NG

5	**Check operation of the VSV for EGR (See page SF–57).**

NG → **Replace VSV for EGR.**

OK

Check for short in harness and connector between VSV and ECM (See page IN–27).

OBD II scan tool (excluding LEXUS hand–held tester):

1	**Check resistance of EGR gas temp. sensor .**

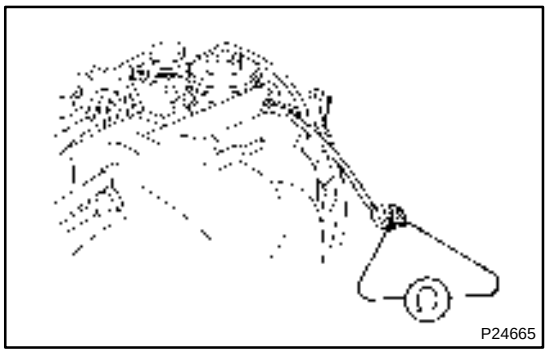

PREPARATION:
Disconnect EGR gas temperature sensor connector.
CHECK:
Measure the resistance between terminals of EGR gas temperature sensor connector.
OK:
Resistance: 2.5 kΩ or more
(Not immediately after driving)
HINT:
If there is short circuit, ohmmeter indicates 200 Ω or less.

NG → **Replace EGR gas temp. sensor.**

OK

2	**Check for short in harness and connector EGR gas temp. sensor and ECM (See page IN–27).**

NG → **Repair or replace harness or connector.**

OK

3	**Check for VSV for EGR (See page DI–67).**

OK → **Check EGR valve (See page EC–10).**

NG

4	**Check operation of VSV for EGR (See page SF–57).**

NG → **Replace VSV for EGR.**

OK

5	**Check for short in harness and connector between VSV and ECM (See page IN–27).**

NG → **Repair or replace harness or connector.**

OK

Check and replace ECM (See page IN–27).

DI5LF–02

DTC	P0420	Catalyst System Efficiency Below Threshold

CIRCUIT DESCRIPTION

The ECM compares the waveform of the oxygen sensor located before the catalyst with the waveform of the oxygen sensor located after the catalyst to determine whether or not catalyst performance has deteriorated.Air–fuel ratio feedback compensation keeps the waveform of the oxygen sensor before the catalyst repeatedly changing back and forth from rich to lean.
If the catalyst is functioning normally, the waveform of the oxygen sensor after the catalyst switches back and forth between rich and lean much more slowly than the waveform of the oxygen sensor before the catalyst.
But when both waveforms change at a similar rate, it indicates that catalyst performance has deteriorated.

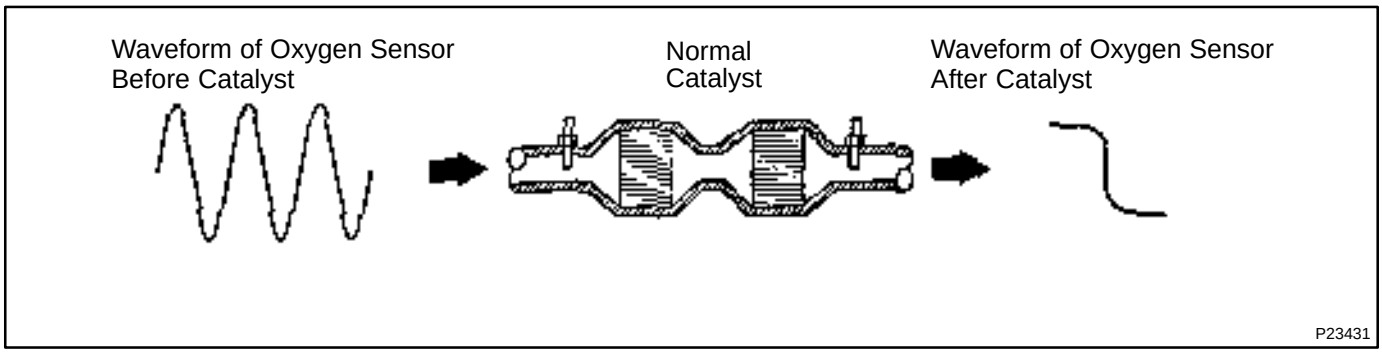

DTC No.	DTC Detection Condition	Trouble Area
P0420	After engine is warmed up and vehicle driven for 6 min. at 30 – 83 km/h (19 – 52mph), waveforms of heated oxygen sensors, bank 1 sensor 1 and bank1 sensor 2, have the same amplitude	• Three–way catalytic converter • Open or short in heated oxygen sensor circuit • Heated oxygen sensor

CONFIRMATION ENGINE RACING PATTERN

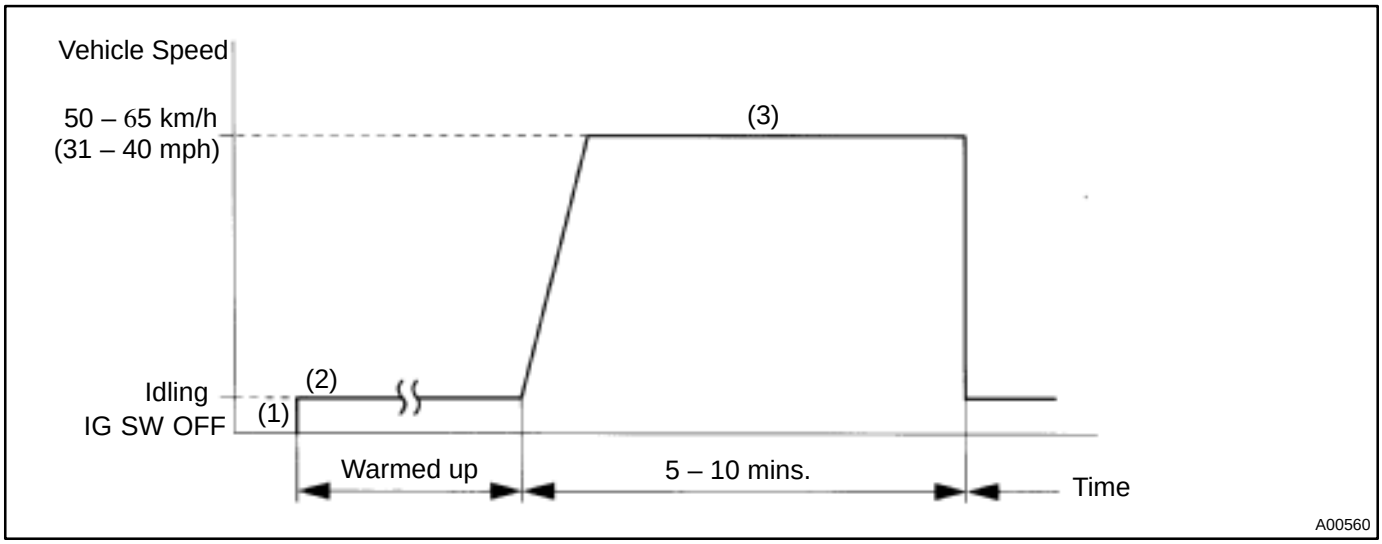

(1) Connect the OBDII scan tool or LEXUS hand–held tester to the DLC 3.
(2) Start and warm up the engine with all the accessories switched OFF.
(3) Run the vehicle at 50 – 65 km/h (31 – 40 mph) for 5 – 10 mins.
HINT:
If a malfunction exists, the MIL will light up during step 3.

INSPECTION PROCEDURE

1	**Are there any other codes (besides DTC P0420) being output?**

YES → **Go to relevant DTC chart.**

NO

2	**Check heated oxygen sensor (bank 1 sensor 1) (See page DI–43).**

NG → **Repair or replace.**

OK

3	**Check heated oxygen sensor (bank 1 sensor 2) (See page DI–49).**

NG → **Repair or replace.**

OK

Replace three–way catalytic converter.

DI5LG–02

DTC	P0500	Vehicle Speed Sensor Malfunction

CIRCUIT DESCRIPTION

The vehicle speed sensor outputs a 4–pulse signal for every revolution of the rotor shaft, which is rotated by the transmission output shaft via the driven gear. After this signal is converted into a more precise rectangular wavefrom by the waveform shaping circuit inside the combination meter, it is then transmitted to the ECM. The ECM determines the vehicle speed based on the frequency of these pulse signals.

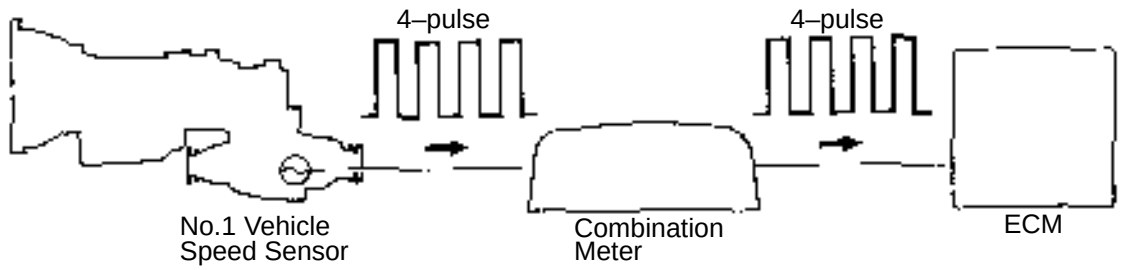

P22487

DTC No.	DTC Detection Condition	Trouble Area
P0500	No vehicle speed sensor signal to ECM under conditions (a) and (b); (2 trip detection logic) (a) park/neutral position switch is OFF. (b) Vehicle is being driven.	• Open or short in No.1 vehicle speed sensor circuit • No.1 vehicle speed sensor • Combination meter • ECM

WIRING DIAGRAM

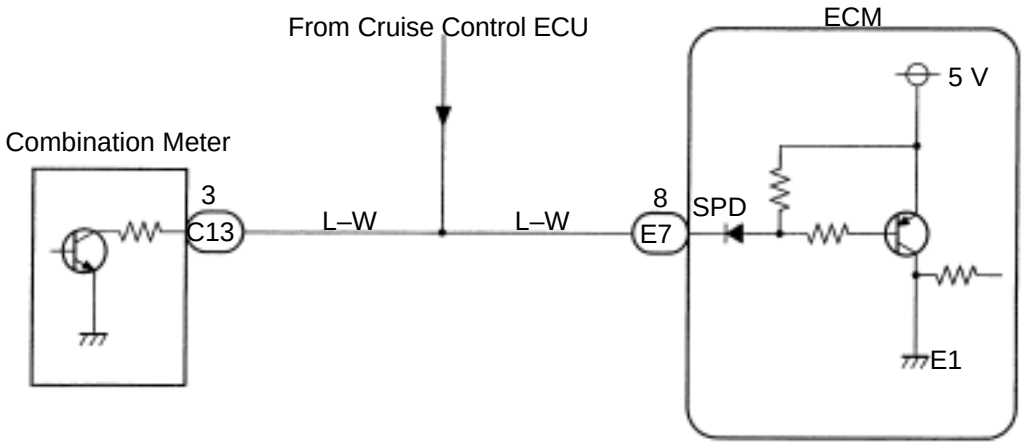

P22473

INSPECTION PROCEDURE

1	**Check operation of speedometer.**

CHECK:

Drive the vehicle and check if the operation of the speedmeter in the combination meter is normal.

HINT:

The vehicle speed sensor is operating normally if the speedometer display is normal.

NG → **Check speedometer circuit (See page BE–49).**

OK

2	**Check voltage between terminal SPD of ECM connector and body ground.**

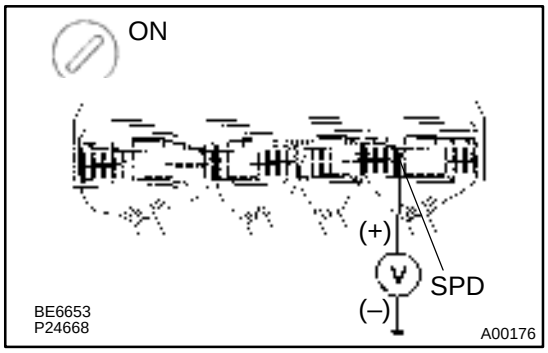

PREPARATION:

(a) Remove the instrument panel speaker No.1 panel (See page SF–63).

(b) Disconnect the cruise control ECU connector.

(c) Shift the shift lever to neutral.

(d) Jack up a rear wheels on one side.

(e) Turn the ignition switch ON.

CHECK:

Measure the voltage between terminal SPD of ECM connector and body ground when the wheel is turned slowly.

OK:

Voltage is generated intermittently.

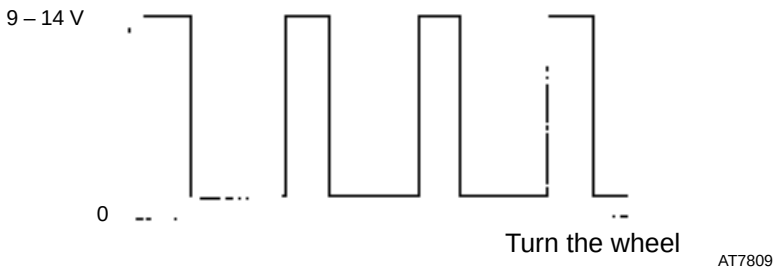

NG → **Check and repair harness and connector between combination meter and ECM.**

OK

Check and replace ECM (See page IN–27).

DI7KI–01

DTC	P0505	Idle Control System Malfunction

CIRCUIT DESCRIPTION

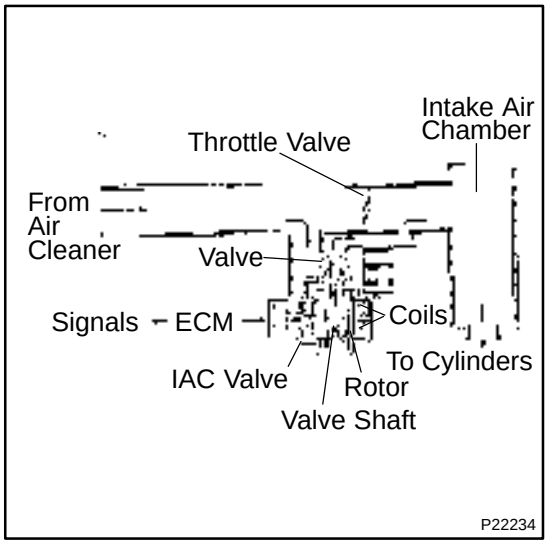

The step motor type IAC valve is located in from of the intake air chamber. Intake air bypassing the throttle valve is directed to the IAC valve through a passage. A step motor is built into the IAC valve. It consists of four coils, a magnetic rotor, valve shaft and valve. When current flows to the coils due to signals from the ECM, the rotor turns and moves the valve shaft forward or backward, changing the clearance between the valve and the valve seat. In this way the intake air volume bypassing the throttle valve is regulated, controlling the engine speed. There are 125 possible positions to which the valve can be opened.

DTC No.	DTC Detection Condition	Trouble Area
P0505	Idle speed continues to vary greatly from the target speed (2 trip detection logic)	• IAC valve is stuck or closed • Open or short in IAC valve circuit • Open or short in A /C signal circuit • Air intake (hose loose)

WIRING DIAGRAM

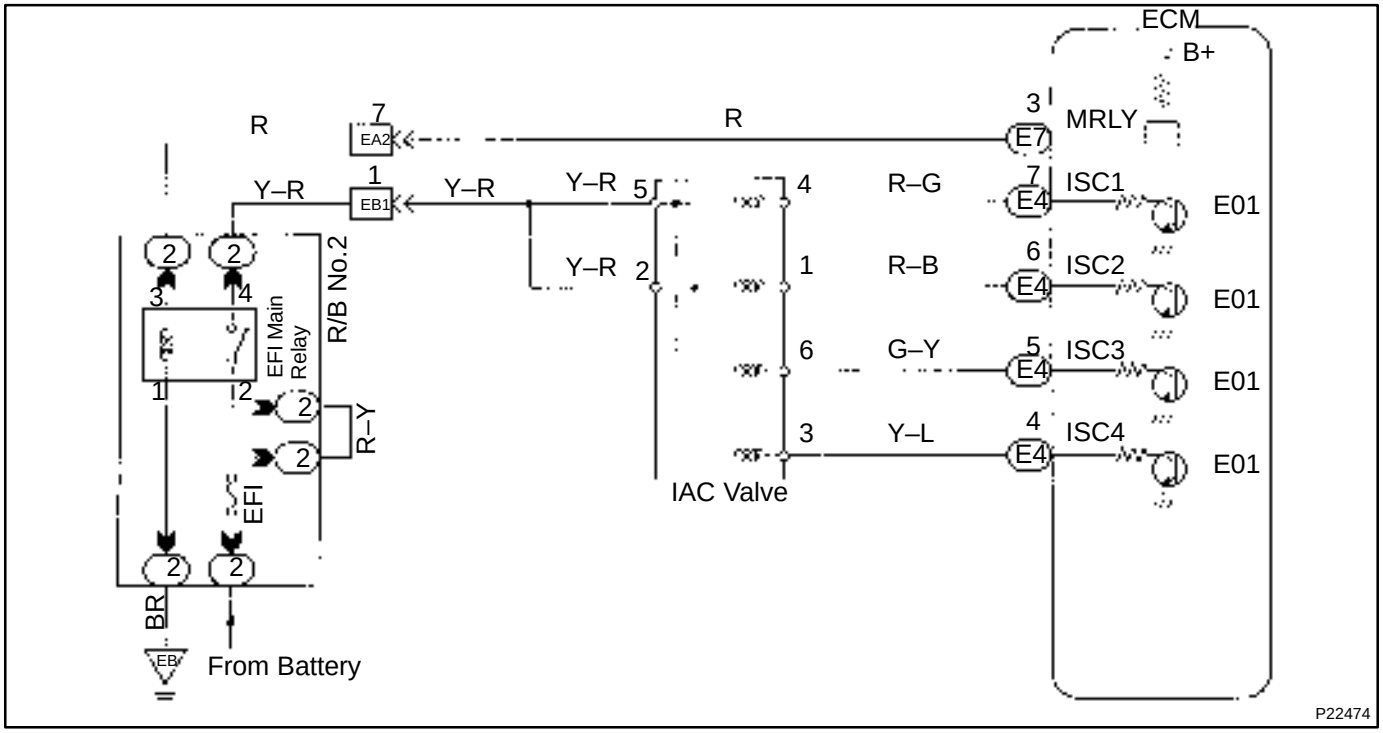

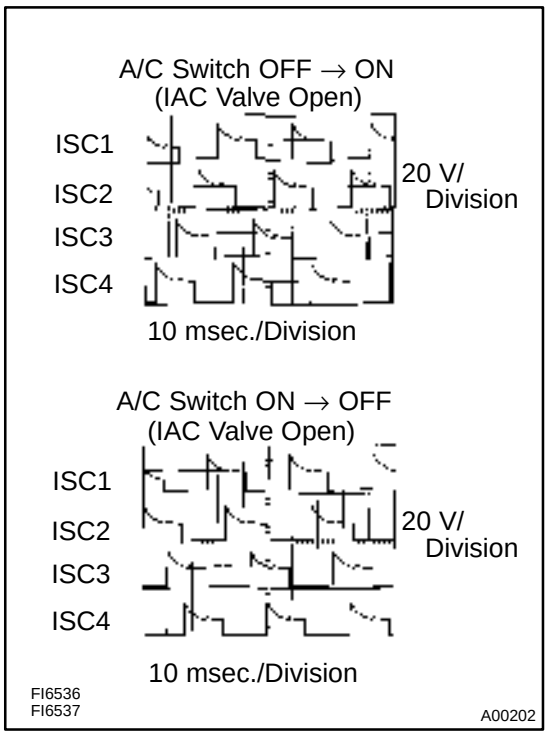

Reference: INSPECTION USING OSCILLOSCOPE

With the engine idling measure wavefoms between terminals ISC1, ISC2, ISC3, ISC4 and E01 of ECM when A/C switch ON or OFF.

HINT:

The correct waveforms are as shown.

INSPECTION PROCEDURE

1	**Check air induction system (See page DI–21).**

NG → **Repair or replace.**

OK

2	**Check voltage terminals ISC1, ISC2, ISC3, ISC4, of ECM connector and body ground.**

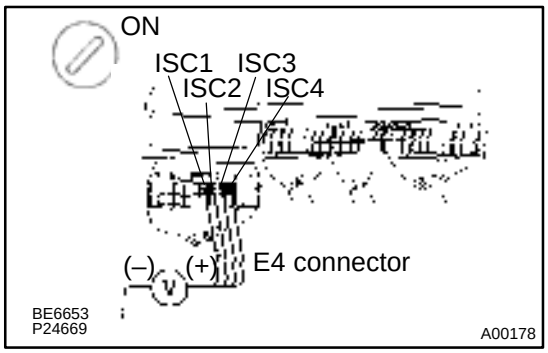

PREPARATION:

(a) Remove the instrument panel speaker No,1 panel (See page SF–63).

(b) Disconnect the E4 connector of ECM.

(c) Turn the ignition switch ON.

CHECK:

Measure the voltage between terminals ISC1, ISC2, ISC3, ISC4 of ECM connector and body ground.

OK:

Voltage: 9 – 14 V

OK → **Go to step 4.**

NG

3	**Check IAC valve (See page SF–45).**

NG → **Replace IAC valve.**

OK

Check for open and short in harness and connector between EFI main relay (Marking:EFI) and IAC valve and ECM (See page IN–27).

4	**Check operation of the IAC valve (See page SF–45).**

NG → **Repair or replace IAC valve.**

OK

Check and replace ECM (See page IN–27).

DI5LI–02

DTC	P0510	Closed Throttle Position Switch Malfunction

CIRCUIT DESCRIPTION

Refer to DTC P0120 on page DI–35.

DTC No.	DTC Detecting Condition	Trouble Area
P0510	The closed throttle position switch does not turn ON or OFF even once when the vehicle is driven (2 trip detection logic)	• Open or short in closed throttle position switch circuit • Closed throttle position switch • ECM

HINT:
After confirming DTC P0510, use the LEXUS hand–held tester to confirm the closed throttle position switch signal from the CURRENT DATA.

Throttle Valve	Closed Throttle Position Switch Signal	Malfunction
Fully closed	OFF	Open circuit
Fully open	ON	Short circuit

WIRING DIAGRAM

Refer to DTC P0120 on page DI–35.

INSPECTION PROCEDURE

HINT:
If DTC P0110, P0115, P0116, P0120 and P0121 are output simultaneously E2 (sensor ground) may be open.

LEXUS hand–held tester:

1	**Connect LEXUS hand–held tester and read CTP switch signal.**

PREPARATION:

(a) Remove the fuse cover on the instrument panel.
(b) Connect OBD II scan tool or LEXUS hand–held tester to the DLC3.
(c) Turn the ignition switch ON and OBD II scan tool or LEXUS hand–held tester main switch ON.

CHECK:

Read the CTP switch signal on LEXUS hand–held tester.

RESULT:

Throttle Valve	Closed Throttle Position Switch Signal	Malfunction
Fully closed	OFF	Open circuit: Go to step 2
Fully open	ON	Short circuit: Go to step 4

2	**Check for open in harness or ECM.**

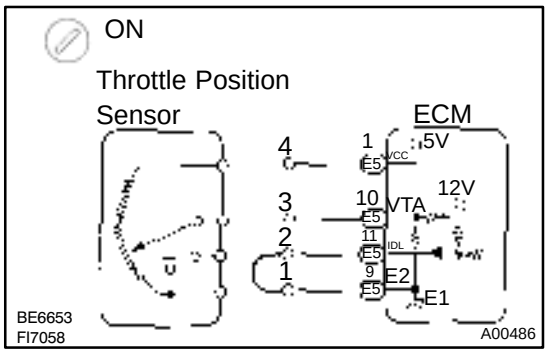

PREPARATION:

(a) Disconnect throttle position sensor connector.

(b) Connect sensor wire harness terminals between terminals 1 and 2.

(c) Turn the ignition switch ON.

CHECK:

Read the CTP switch signal on LEXUS hand–held tester.

OK:

CTP switch signal: ON

OK	**Confirm good connection at sensor. If OK,replace throttle position sensor.**

NG

3	**Check for open in harness or ECM.**

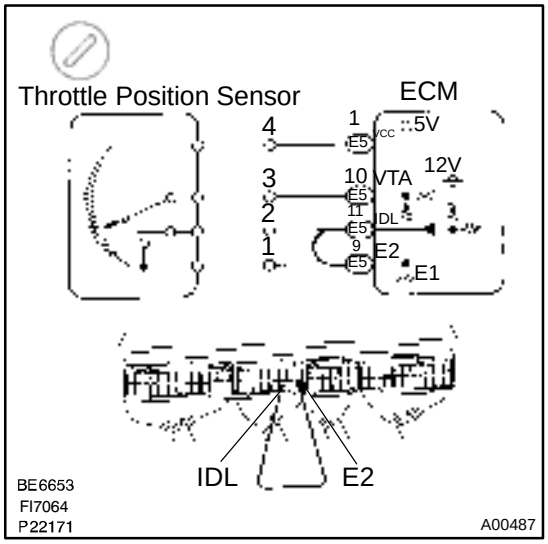

PREPARATION:

(a) Remove instrument panel speaker NO.1 panel (See page SF–63).

(b) Connect between terminals IDL and E2 of ECM.

HINT:

Throttle position sensor connector is disconnected.

Before checking, do a visual check and contact pressure check for connector (See page IN–27).

CHECK:

Read the CTP switch signal on LEXUS hand–held tester.

OK:

CTP switch signal: ON

OK	**Open in harness between ECM and throttle position sensor, repair or replace harness.**

NG

Confirm connection at ECM.
If OK, replace ECM.

4	**Check for short in harness or ECM.**

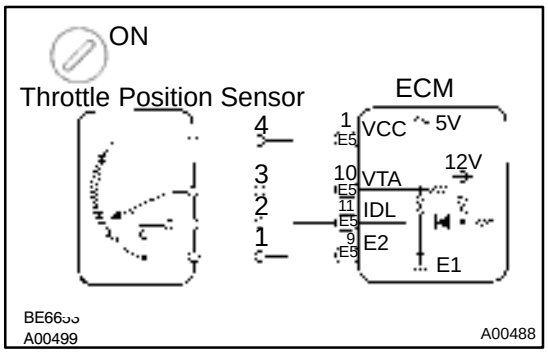

PREPARATION:

(a) Disconnect throttle position sensor connector.

(b) Turn the ignition switch ON.

CHECK:

Read the CTP switch signal on LEXUS hand–held tester.

OK:

CTP switch signal: OFF

OK	**Confirm good connection at sensor. If OK, replace throttle position sensor.**

NG

5	**Check for short in harness or ECM.**

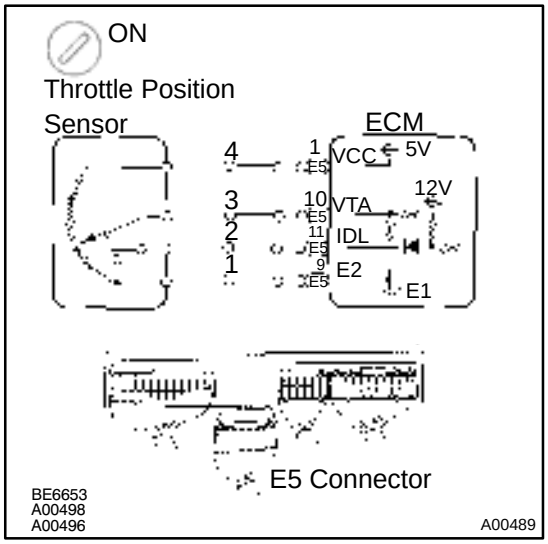

PREPARATION:

(a) Remove instrument panel speaker NO.1 panel (See page SF–63).

(b) Disconnect E5 connector of ECM.

(c) Turn the ignition switch ON.

HINT:

Throttle position sensor connector is disconnected.

(d) Disconnect E5 connector of ECM.

CHECK:

Read the CTP switch signal on LEXUS hand–held tester.

OK:

CTP switch signal: OFF

OK	**Short in harness between ECM and throttle position sensor, repair or replace harness.**

NG

Confirm connection at ECM.
If OK, replace ECM.

OBD II scan tool (excluding LEXUS hand–held tester):

1	**Check for open and short in harness or ECM.**

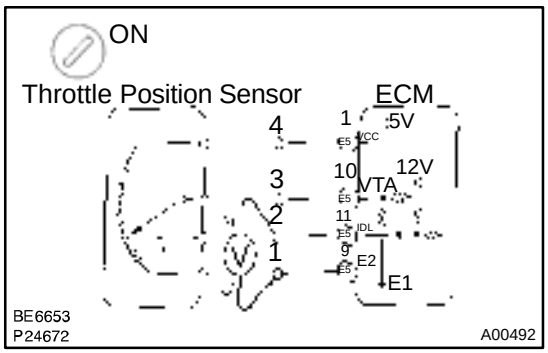

PREPARATION:

(a) Disconnect throttle position sensor connector.

(b) Turn the ignition switch ON.

CHECK:

Measure the voltage between terminals 1 and 2 of throttle position sensor connector.

OK:

Voltage: 9 – 14 V

OK → **Confirm good connection at sensor. If OK, replace throttle position sensor.**

NG

2	**Check for open and short in harness and connector between throttle position sensor and ECM (See page IN–27).**

NG → **Open or short in harness between ECM and throttle position sensor.**

OK

Confirm connection at ECM. If OK, replace ECM.

DI5LJ–02

DTC	P1300	Igniter Circuit Malfunction

CIRCUIT DESCRIPTION

The ECM determines the ignition timing, turns on Tr1 at a predetermined angle (˚CA) before the desired ignition timing and outputs and ignition signal (IGT) 1 to the igniter.
Since the width of the IGT signal is constant, the dwell angle control circuit in the igniter determines the time the control circuit starts primary current flow to the ignition coil based on the engine rpm and ignition timing one revolution ago, that is, the time the Tr2 turns on.
When it reaches the ignition timing, the ECM turns Tr1 off and outputs the IGT signal O.
This turns Tr2 off, interrupting the primary current flow and generating a high voltage in the secondary coil which causes the spark plug to spark. Also, by the counter electromotive force generated when the primary current is interrupted, the igniter sends an ignition confirmation signal (IGF) to the ECM. The ECM stops fuel injection as a fail safe function when the IGF signal is not input to the ECM.

DTC No.	DTC Detection Condition	Trouble Area
P1300	No IGF signal to ECM for 6 consecutive IGT signal during engine running	• Open or short in IGF or IGT circuit from igniter to ECM • Igniter • ECM

WIRING DIAGRAM

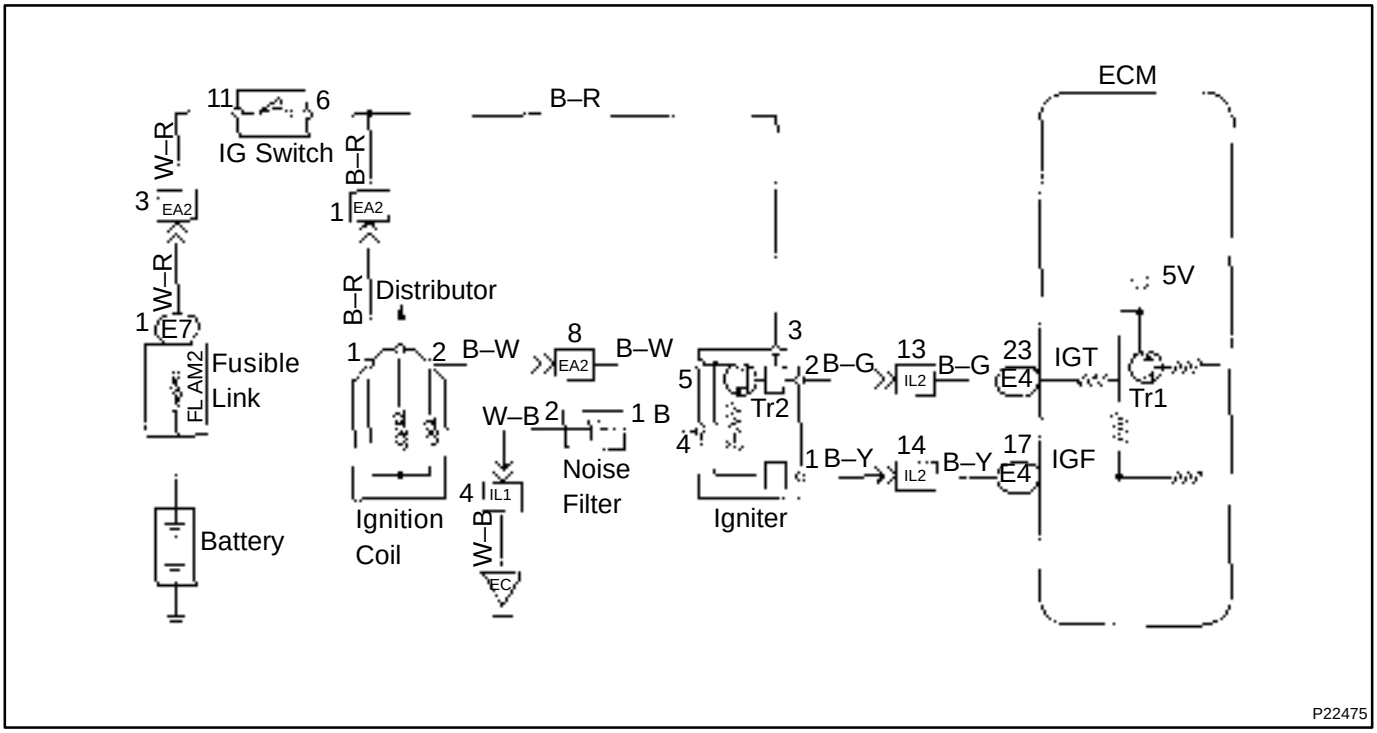

INSPECTION PROCEDURE

1	**Check for spark plug (See page IG–1).**

NG → **Go to step 4.**

OK

2	**Check for open and short in harness and connector in IGF signal circuit between ECM and igniter (See page IN–27).**

NG → **Repair or replace harness or connector.**

OK

3	**Disconnect igniter connector and check voltage between terminal IGF of ECM connector and body ground.**

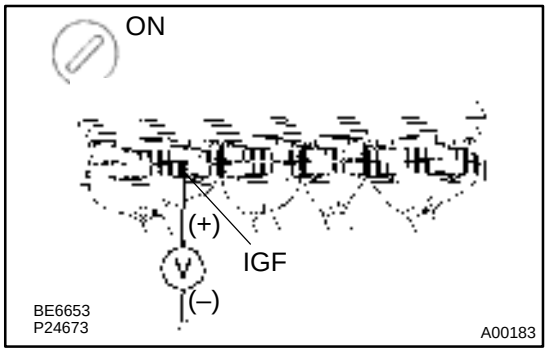

PREPARATION:

(a) Disconnect the igniter connector.

(b) Remove the instrument panel speaker No,1 panel. (See page SF–63).

(c) Turn the ignition switch ON.

CHECK:

Measure the voltage between terminal IGF of ECM connector and body ground.

OK:

Voltage: 4.5 – 5.5 V

OK → **Replace igniter.**

NG

Check and replace ECM (See page IN–27).

4	**Check for open and short in harness and connector in IGT signal circuit between ECM and igniter (See page IN–27).**

NG → **Repair or replace harness or connector.**

OK

5	**Check voltage between terminals IGT of ECM connector and body ground.**

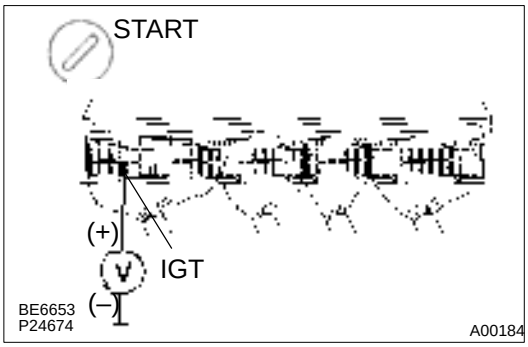

PREPARATION:
Remove the instrument panel speaker No.1 panel.
(See page SF–63).

CHECK:
Measure the voltage between terminal IGT of ECM connector and body ground when engine is cranked.

OK:

Voltage: More than 0.1 V and less than 4.5 V

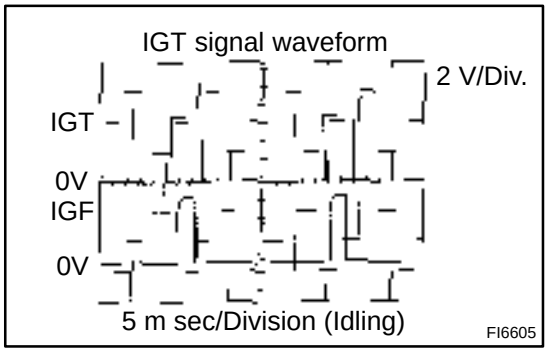

Reference INSPECTION USING OSCILLOSCOPE
During cranking or idling, check waveform between terminals IGT and E1 of ECM.
HINT:
The correct regulator waveform is as shown.

NG → **Check and replace ECM (See page IN–27).**

NG

6	**Disconnect igniter connector and check voltage between terminals IGT of ECM connector and body ground.**

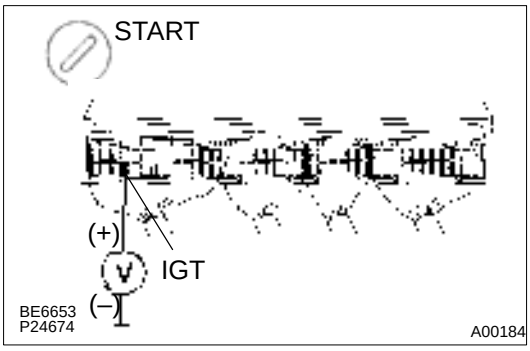

PREPARATION:

(a) Disconnect the igniter connector.

(b) Remove the instrument panel speaker panel. (See page SF–63).

CHECK:

Measure the voltage between terminals IGT of ECM connector and body ground when engine is cranked.

OK:

Voltage: More than 0.1 V and less than 4.5 V

OK → **Check and replace ECM (See page IN–27).**

NG

7	**Check voltage between terminal 3 of igniter connector and body ground.**

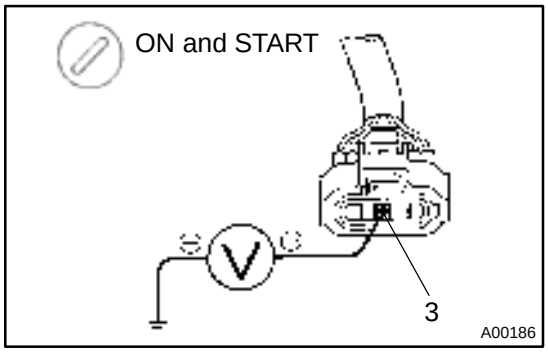

PREPARATION:

Disconnect the igniter connector.

CHECK:

Measure the voltage between terminal 3 of igniter connector and body ground, when ignition switch is turned to ”ON” and ”STA” position.

OK:

Voltage: 9 – 14 V

NG → **Check and repair igniter power source circuit.**

OK

8	**Check for open and short in harness and connector between ignition switch and ignition coil, ignition coil and igniter (See page IN–27).**

NG → **Repair or replace harness or connector.**

OK

9	**Check ignition coil (See page IG–1).**

NG → **Replace ignition coil.**

OK

Replace igniter.

DI5LK–02

DTC	P1335	Crankshaft Position Sensor Circuit Malfunction (during engine running)

CIRCUIT DESCRIPTION

Refer to DTC P0335 on page DI–61.

DTC No.	DTC Detection Condition	Trouble Area
P1335	No crankshaft position sensor signal (NE signal) to ECM with engine speed 1,000 rpm or more	• Open or short in crankshaft position sensor circuit for NE signal • Crankshaft position sensor for NE signal • Starter • ECM

WIRING DIAGRAM

Refer to DTC P0335 on page DI–61.

DI5LP–02

DTC	P1500	Starter Signal Circuit

CIRCUIT DESCRIPTION

When the engine is cranked, the intake air flow is slow, so fuel vaporization is poor. A rich mixture is therefore necessary in order to achieve good startability. While the engine is being cranked, the battery positive voltage is applied to terminal STA of the ECM. The starter signal id mainly used to increase the fuel injection volume for the starting injection control and after–start injection control.

DTC No.	DTC Detection Condition	Trouble Area
P1500	No starter signal to ECM	• Open or short in starter signal circuit • ECM

WIRING DIAGRAM

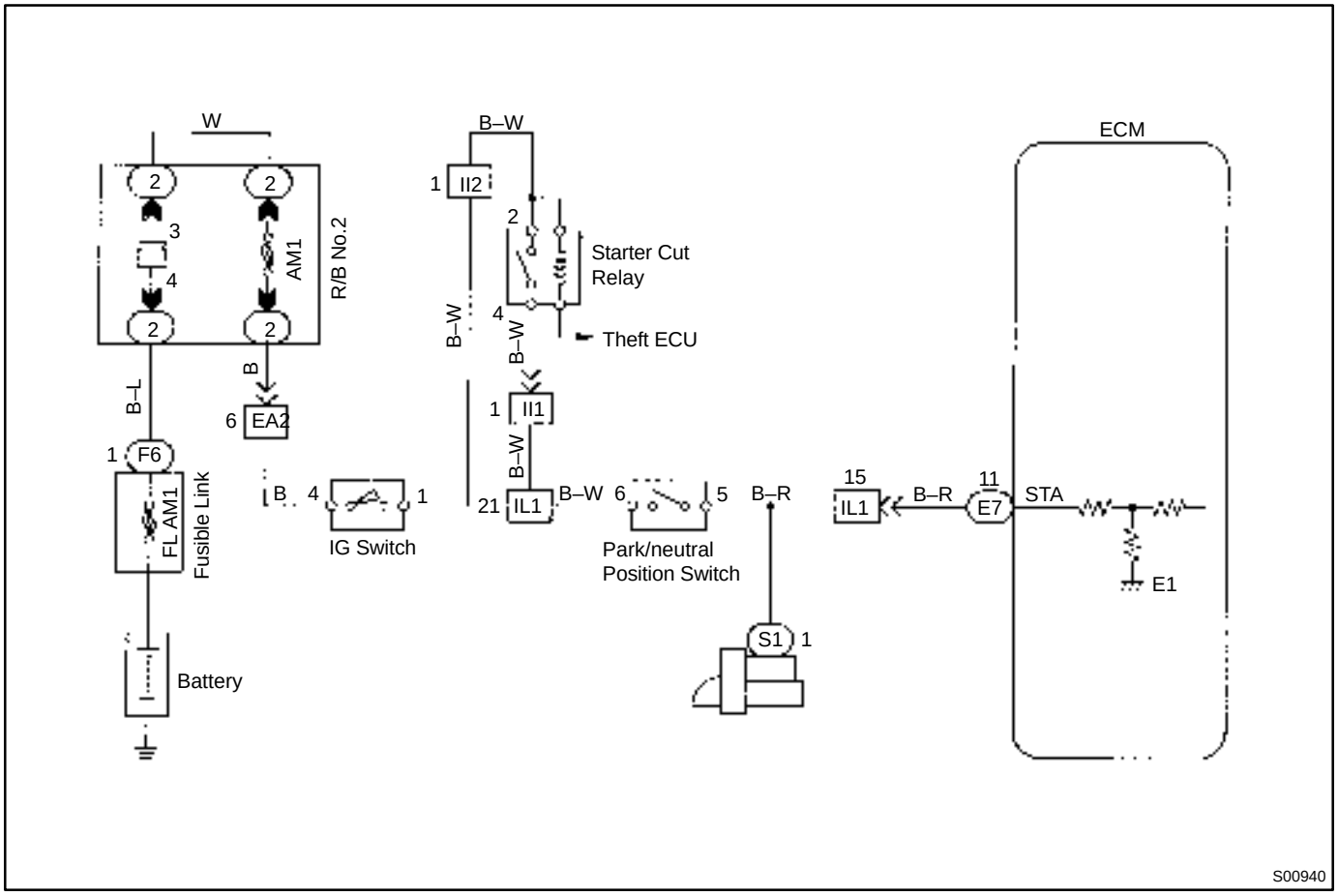

INSPECTION PROCEDURE

HINT:

This diagnostic chart is based on the premise that the engine is cranked normally. If the engine is not cranked, proceed to the problem symptoms table on page DI–20.

1	**Connect LEXUS hand–held tester and check STA signal.**

PREPARATION:

(a) Remove the fuse cover on the instrument panel.
(b) Connect the LEXUS hand–held tester to the DLC3.
(c) Turn the ignition switch ON and push the LEXUS hand–held tester main switch ON.

CHECK:

Read the STA signal on the LEXUS hand–held tester while starter operates.

OK:

Ignition Switch Position	ON	START
STA signal	OFF	ON

OK → **Proceed to next circuit inspection shown on problem symptoms table (See page DI–20).**

NG

2	**Check for open in harness and connector between ECM and starter relay (Marking: STARTER) (See page IN–27).**

NG → **Repair or replace harness or connector.**

OK

Check and replace ECM (See page IN–27).

DI5LM–02

DTC	P1600	ECM BATT Malfunction

CIRCUIT DESCRIPTION

Battery positive voltage is supplied to terminal BATT of the ECM even when the ignition switch is OFF for use by the DTC memory and air–fuel ratio adaptive control value memory, etc.

DTC No.	DTC Detection Condition	Trouble Area
P1600	Open in back up power source circuit	• Open in back up power source circuit • ECM

HINT:
If DTC P1600 appear, the ECM does not store another DTC.

WIRING DIAGRAM

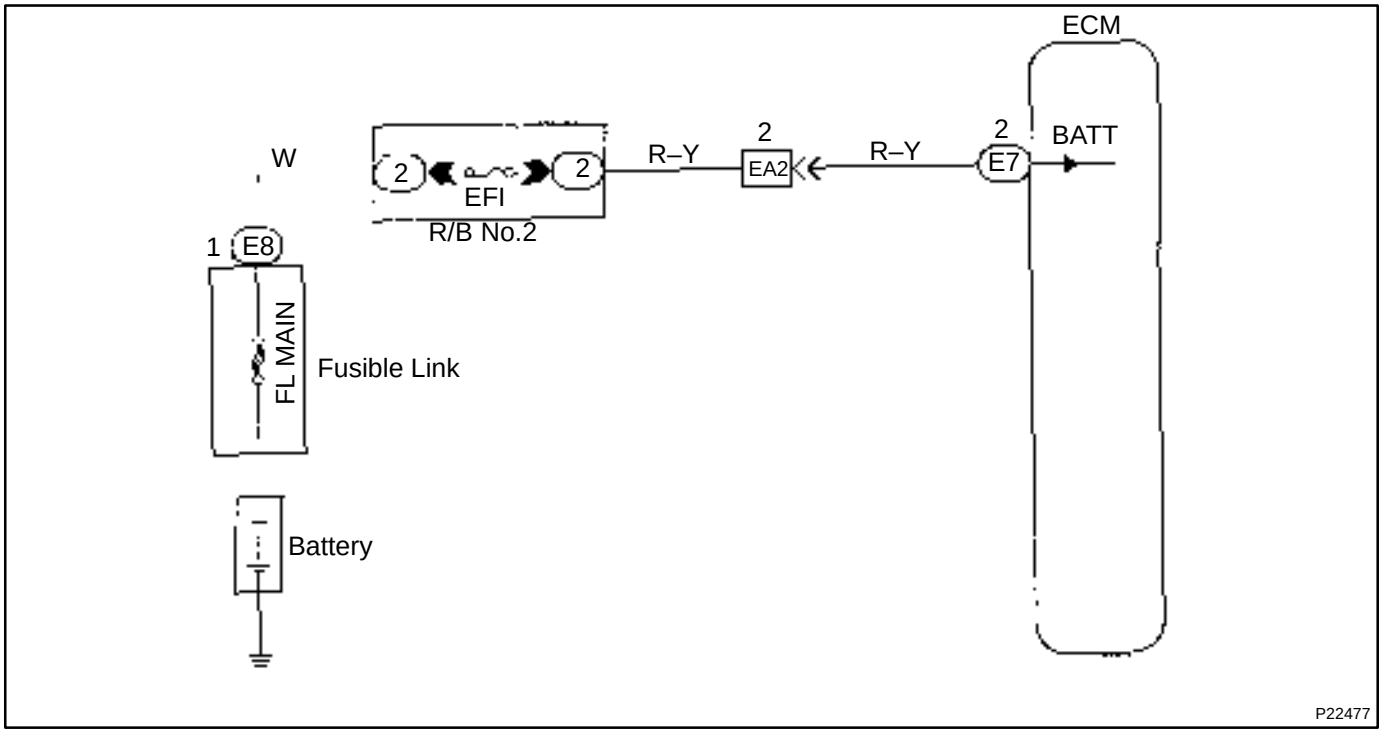

INSPECTION PROCEDURE

1	**Check voltage between terminal BATT of ECM connector and body ground.**

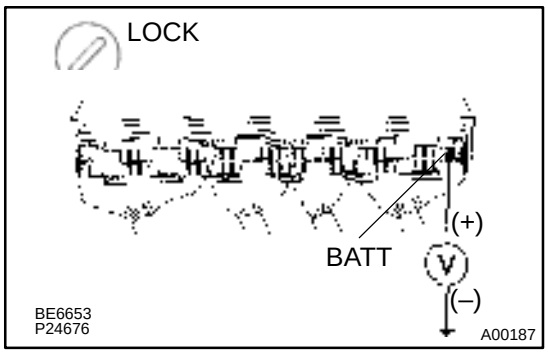

PREPARATION:
Remove the instrument panel speaker No.1 panel (See page SF–63).

CHECK:
Measure the voltage between terminal BATT of ECM connector and body ground.

OK:
Voltage 9 – 14 V

OK → **Check and replace ECM (See page IN–27).**

NG

2	**Check EFI fuse.**

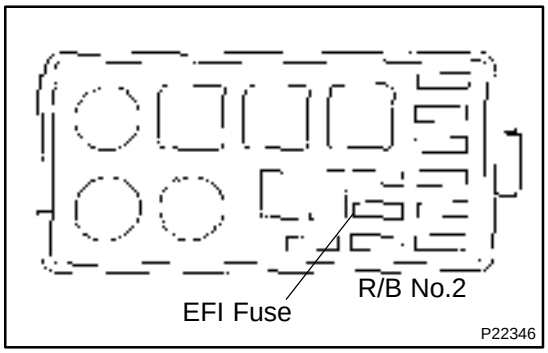

PREPARATION:
Remove the EFI fuse from the R/B No.2.

CHECK:
Check the continuity of EFI fuse.

OK:
Continuity

NG → **Check for short in all harness and components connected to EFI fuse.**

OK

Check and repair harness or connector between battery, EFI fuse and ECM.

DI5LN–02

DTC	P1605	Knock Control CPU Malfunction

CIRCUIT DESCRIPTION

Refer to DTC P0325, P0330 on page DI–58.

DTC No.	DTC Detection Condition	Trouble Area
P1600	Engine control computer malfunction (for knock control)	• ECM

WIRING DIAGRAM

Refer to DTC P0325, P0330 on page DI–58.

INSPECTION PROCEDURE

1	**Are there any other codes (besides DTC P1605) being output?**

YES → **Go to relevant DTC chart.**

NO →

Check and replace ECM (See page IN–27).

DI5LO–02

DTC	P1780	Park/Neutral Position Switch Malfunction

CIRCUIT DESCRIPTION

The park/neutral position switch goes on when the shift lever is in the N or P shift position. When it goes on terminal NSW of the ECM is grounded to body ground via the starter relay, thus the terminal NSW voltage becomes 0V. When the shift lever is in the D, 2, L, or R position, the park/neutral position switch goes off, so the voltage of ECM terminal NSW becomes battery positive voltage, the voltage of the ECM internal power source. If the shift lever is moved from the N position to the D position, this signal is used for air–fuel ratio correction and for idle speed control (estimated control), etc.

DTC No.	DTC Detection Condition	Trouble Area
P1780	2 or more switches are ON simultaneously for N, 2, L position (2 trip detection logic)	• Short in park/neutral position switch circuit • Park/neutral position switch • ECM
	When driving under conditions (a) and (b) for 30 sec. or more park/neutral position switch is ON (N position): (2 trip detection logic) (a) Vehicle speed: 70 km/h (44 mph) or more (b) Engine speed: 1,500 ~ 2,500 rpm	

HINT:
After confirming DTC P1780, use the LEXUS hand–held tester to confirm the PNP switch signal from ”CURRENT DATA”.

WIRING DIAGRAM

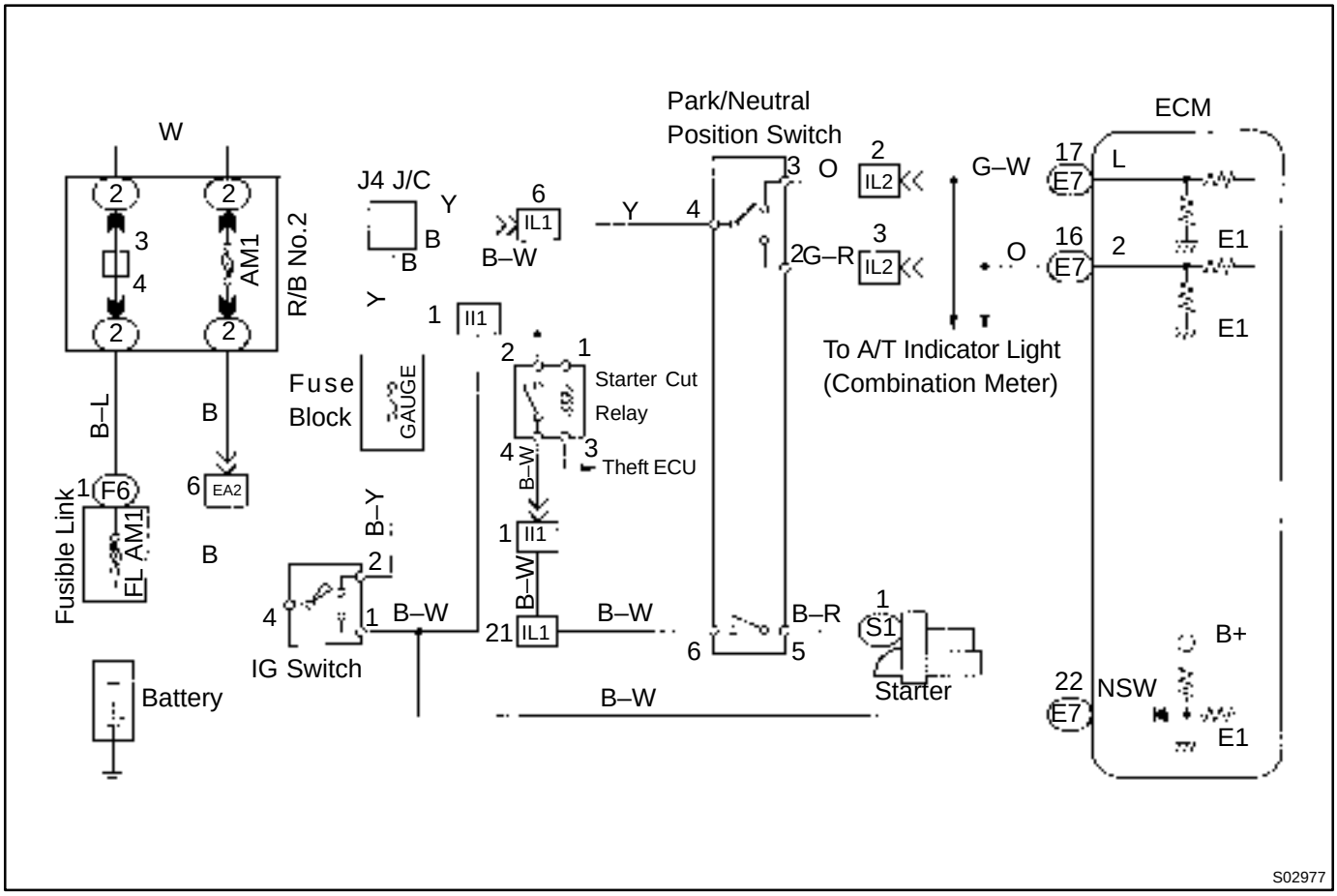

INSPECTION PROCEDURE

1	**Check park/neutral position switch.**

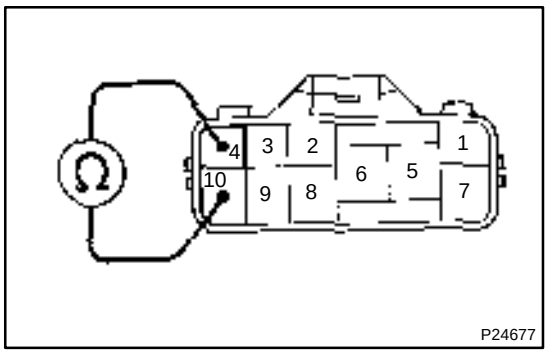

PREPARATION:
Disconnect park/neutral position switch connector.

CHECK:
Check the continuity between each terminal shown below when the shift lever is positioned to each range.

OK:

Shift Position	Terminal No. to continuity	
P	4 – 7	5 – 6
R	4 – 8	–
N	4 – 10	5 – 6
D	4 – 9	–
2	2 – 4	–
L	3 – 4	–

NG → **Replace park/neutral position switch.**

OK

2	**Check voltage between terminal NSW of ECM connector and body ground.**

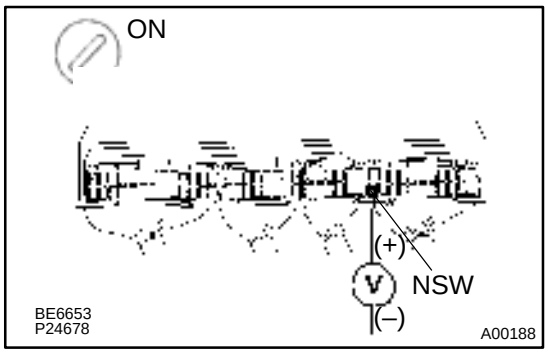

PREPARATION:
Remove instrument panel speaker No.1 panel
(See page SF–63).

CHECK:
(a) Turn the ignition switch ON.
(b) Measure the voltage between terminal NSW of ECM connector and body ground when the shift lever is positioned to the following positions.

OK:

Shift lever position	P or N	L, 2, D or R
Voltage	0 V	9 – 14 V

OK → **Check and replace ECM (See page IN–27).**

NG

Check for open and short in harness and connector between ECM and park/neutral position switch (See page IN–27).

DI5LQ–02

ECM Power Source Circuit

CIRCUIT DESCRIPTION

When the ignition switch is turned ON, battery positive voltage is applied to the coil, closing the contacts of the EFI main relay (Marking: EFI) and supplying power to the terminal +B of the ECM.

WIRING DIAGRAM

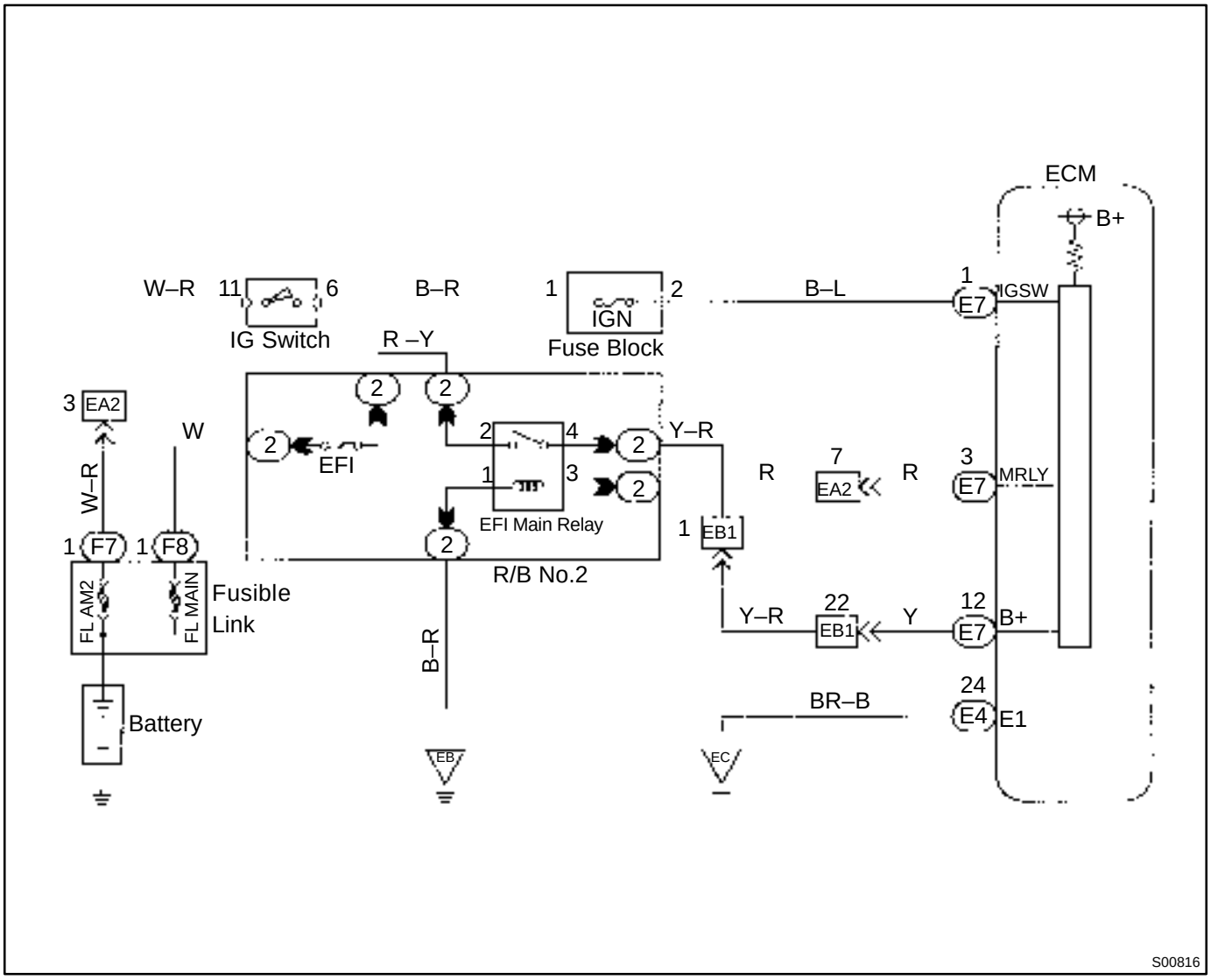

S00816

INSPECTION PROCEDURE

1	Check voltage between terminals +B and E1 of the ECM connector.

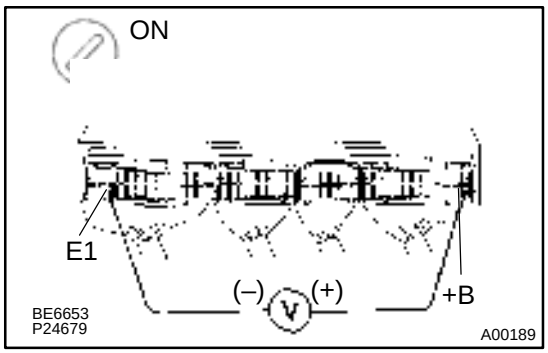

PREPARATION:

(a) Remove the instrument panel speaker No.1 panel (See page SF–63).

(b) Turn the ignition switch ON.

CHECK:

Measure the voltage between terminals +B and E1 of the ECM connector.

OK:

Voltage: 9 – 14 V

OK → **Proceed to next circuit inspection shown on Problem symptoms table (See page DI–2).**

NG

2	Check for open in harness and connector between terminal E1 of ECM connector and body ground (See page IN–27).

NG → **Repair or replace harness or connector.**

OK

3	Check voltage between terminal IGSW of ECM connector and body ground.

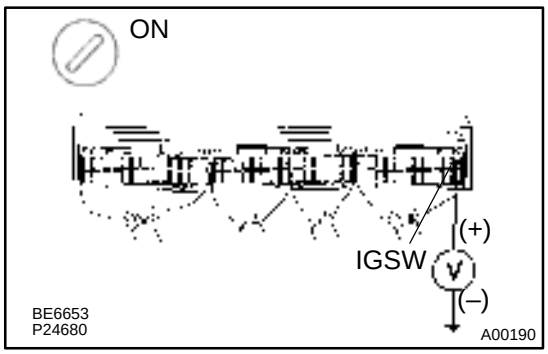

PREPARATION:

(a) Remove instrument panel speaker No.1 panel (See page SF–63).

(b) Turn the ignition switch ON.

CHECK:

Measure the voltage between terminals IGSW of ECM and body ground.

OK:

Voltage: 9 – 14 V

4	**Check IGN fuse from fuse block.**

NG → **Check for short in all the harness and components connected to IGN fuse.**

OK

5	**Check ignition switch.**

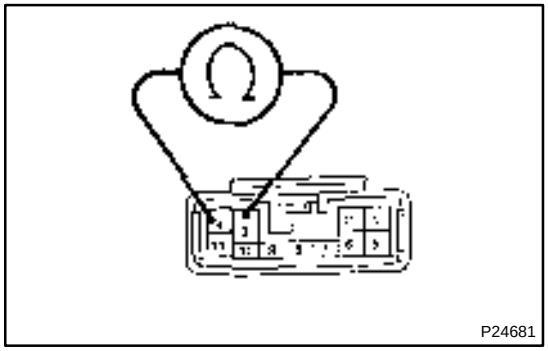

PREPARATION:

(a) Remove the instrument lower finish panel.

(b) Remove the instrument cluster finish center panel NO.2.

CHECK:

Check the continuity between terminals.

OK:

Shift Position	Terminal No. to continuity	
LOCK	–	–
ACC	3 – 4	–
ON	2 – 3 – 4	6 – 11
START	1 – 2 – 4	5 – 6 – 11

NG → **Replace ignition switch.**

OK

Check for open and short in harness and connector between battery and ignition switch, ignition switch and ECM.

6	Check voltage between terminal MREL of ECM connector and body ground.

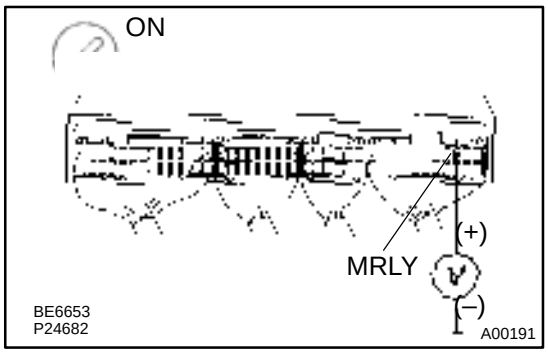

PREPARATION:

(a) Remove instrument panel speaker No.1 panel (See page SF–63).

(b) Turn the ignition switch ON.

CHECK:

Measure the voltage between terminal MREL of ECM and body ground.

OK:

Voltage: 9 – 14 V

NG → **Check and replace ECM.**

OK

7	Check EFI fuse (Marking: EFI).

NG → **Check for short in all the harness and components connected to EFI fuse.**

OK

8	Check EFI main relay (Marking: EFI) (See page SF–50).

NG → **Replace EFI main relay (Marking: EFI).**

OK

9	**Check for open and short in harness and connector between terminal MREL of ECM connector and body ground (See page IN–27)**

NG → **Repair or replace harness or connector.**

OK

Check for open and short in harness and connector between terminal +B of ECM connector and battery (See page IN–27).

DI7KJ–01

Fuel Pump Control Circuit

CIRCUIT DESCRIPTION

In the diagram below, when the engine is cranked, current flows form terminal ST of the ignition switch to terminal STA of ECM (STA signal).
When the STA signal and NE signal are input to the ECM, Tr1 is turned ON, current flows to coil of the circuit opening relay, the relay switches on, power is supplied to the fuel pump and the fuel pump operates.
While the NE signal is generated (engine running), the ECM keeps Tr1 ON (circuit opening relay ON) and the fuel pump also keeps operating.
The fuel pump speed is controlled at 2 levels (high speed or low speed) by the condition of the engine (starting, light load, heavy load). When the engine starts (STA ON), Tr2 in the ECM is OFF, so battery voltage is applied directry to the fuel pump. Fuel pump operates at high speed.
After the engine starts, during idling or light loads, since Tr2 goes ON, power is supplied to the fuel pump via the fuel pump resistor.
Fuel pump operates at low speed.

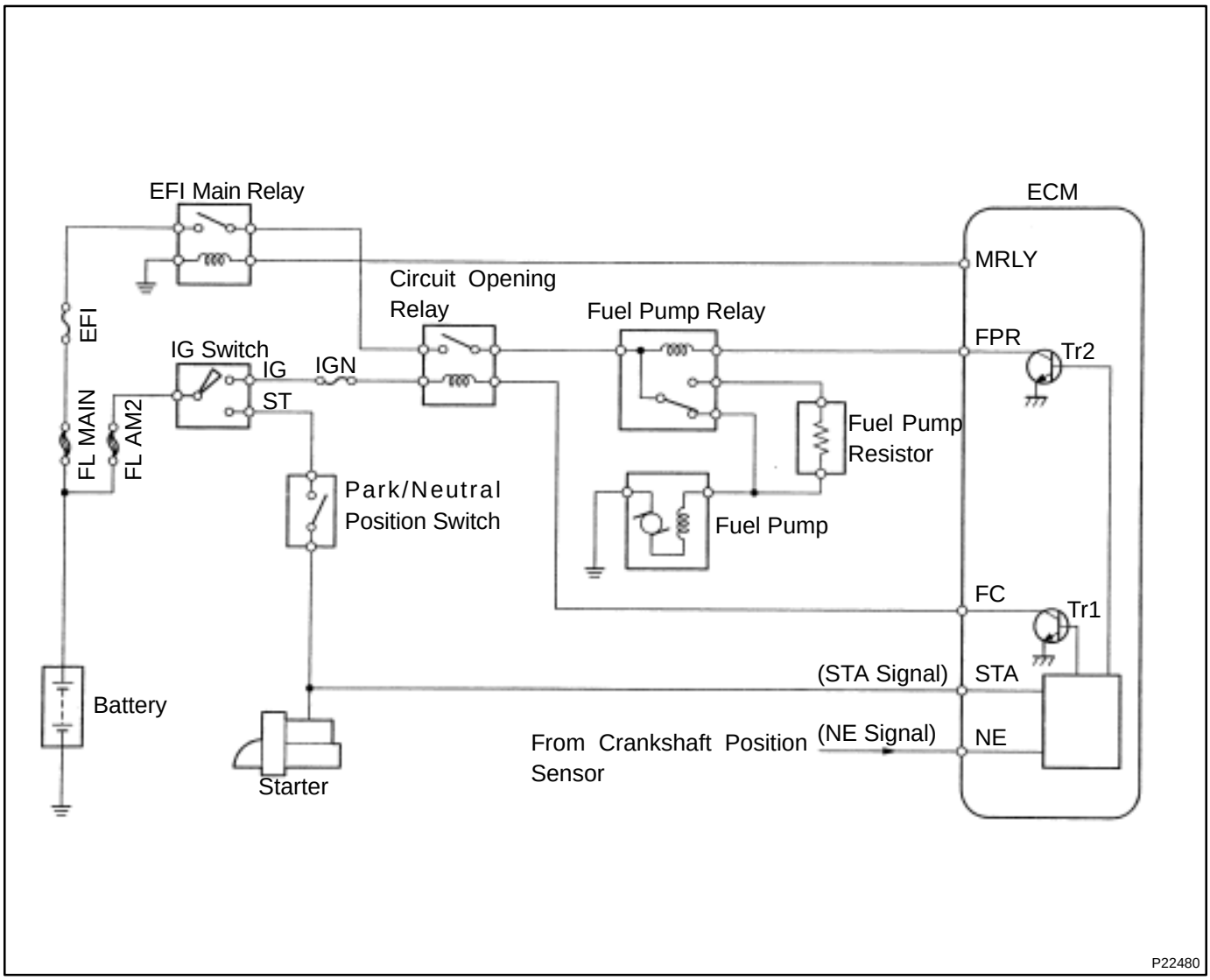

WIRING DIAGRAM

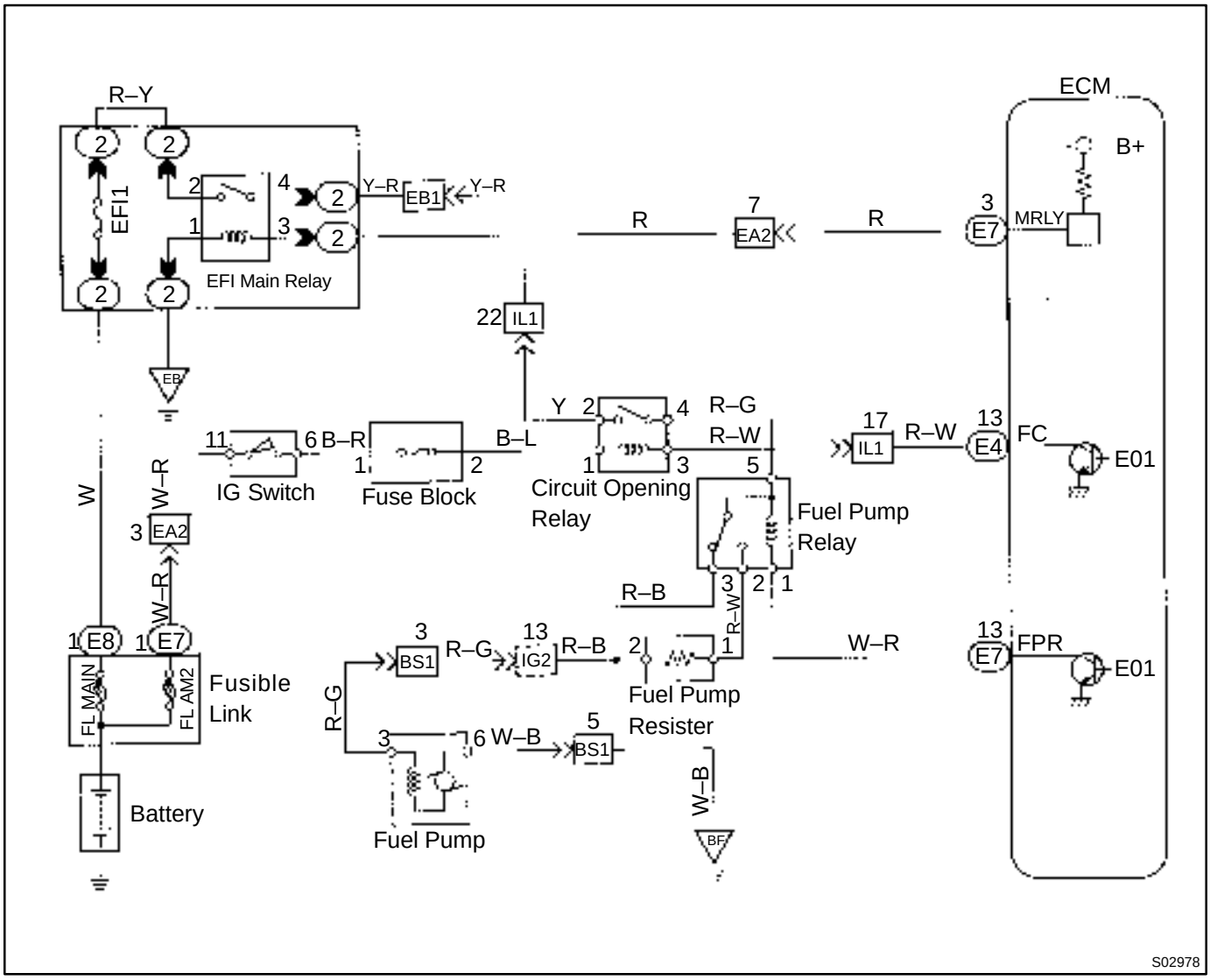

INSPECTION PROCEDURE
LEXUS hand–held tester:

1	**Connect LEXUS hand–held tester and check operation of the fuel pump.**

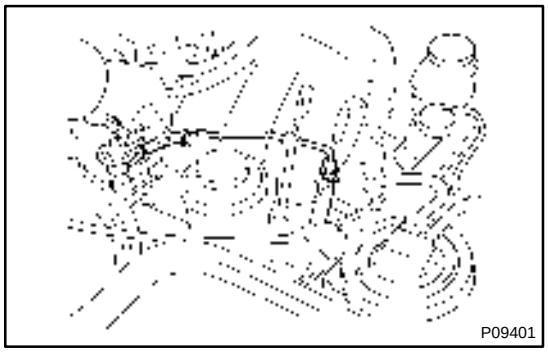

PREPARATION:

(a) Remove the fuse cover on the instrument panel.
(b) Connect the LEXUS hand–held tester to the DLC3.
(c) Turn the ignition switch ON and push the LEXUS hand–held tester main switch ON.
(d) Use the ACTIVE TEST mode to operate the fuel pump.

CHECK:

Check for fuel pressure in the fuel return hose when it is pinched off.

OK:

There is pressure in the fuel return hose.

HINT:
At this time, you will hear a fuel flowing noise.

OK → **Go to step 4.**

NG

2	**Check circuit opening relay (See page SF–51).**

NG → **Replace circuit opening relay.**

OK

3	**Check voltage between terminal FC of ECM connector and body ground.**

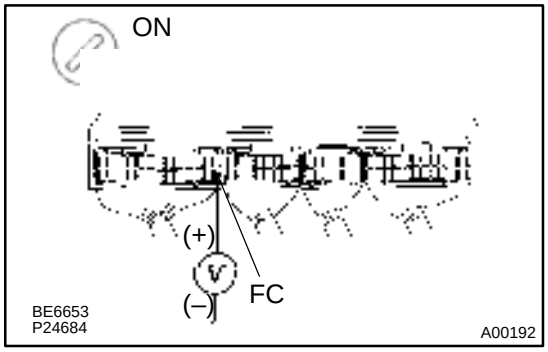

PREPARATION:

(a) Remove instrument panel speaker No.1 panel (See page SF–63).

(b) Turn the ignition switch ON.

CHECK:

Measure the voltage between terminal FC of ECM and body ground.

OK:

Voltage: 9 – 14 V

OK → **Go to step 5.**

NG

Check for open and short in harness and connector between terminal FC of ECM and circuit opening relay and fuse block (See page IN–27).

4	**Connect LEXUS hand–held tester and check operation of fuel pump relay.**

PREPARATION:

(a) Connect the LEXUS hand–held tester to the DLC3.

(b) Start the engine.

(c) Turn the LEXUS hand–held tester main switch ON.

(d) Select the ACTIVE TEST mode on the LEXUS hand–held tester.

CHECK:

Check operation of the fuel pump relay when it is switched ON and OFF by the LEXUS hand–held tester.

OK:

Operating noise can be heard from the relay.

OK → **Go to step 8.**

NG

5	**Check operation of fuel pump relay (See page SF–53).**

NG → **Replace fuel pump relay.**

OK

6	**Check voltage between terminal FPR of ECM connector and body ground.**

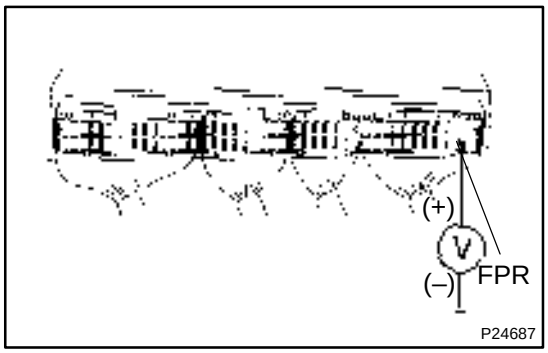

PREPARATION:

(a) Remove instrument panel speaker No.1 panel (See page SF–63).

(b) Start the engine.

CHECK:

Measure the voltage between terminal FPR of ECM and body ground while racing the engine.

OK:

Time after engine started	Voltage
60 seconds or more	0 – 3 V
Less than 60 seconds	9 – 14 V

OK → **Check and replace ECM (See page IN–27).**

NG

7	**Check for open and short in harness and connector between terminal FPR of ECM connector and fuel pump relay (See page IN–27).**

NG → **Repair or replace harness or connector.**

OK

8	**Check operation of fuel pump.**

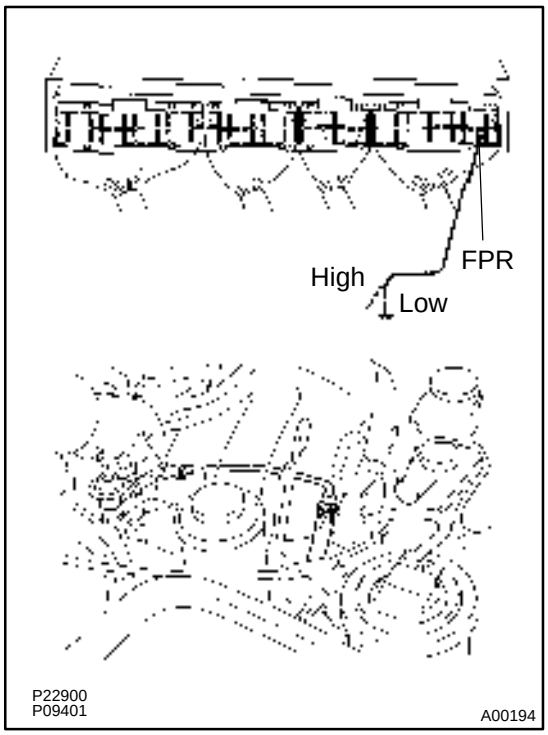

PREPARATION:

(a) Remove instrument panel speaker No.1 panel (See page DI–47).
(b) Connect the LEXUS hand – held tester to the DLC3.
(c) Turn ignition switch ON.
(d) LEXUS hand – held tester main switch ON.
(e) Use the ACTIVE TEST mode to operate the fuel pump.

CHECK:

Check the operation of fuel pump, when it is operated by the LEXUS hand–held tester and terminal FPR of ECM is grounded and is not grounded.

OK:

There is pressure in the inlet hose.

HINT:

At this time, you will hear a fuel flowing noise.

FPR is grounded (Low speed)	FPR is not grounded	
NG	NG	Go to step 9
NG	OK	Go to step 10
OK	NG	Repair or replace harness or connector between fuel pump relay and fuel pump.

9	**Check fuel pump (See page SF–6).**

NG → **Repair or replace fuel pump.**

OK

Check for open or short in harness and connector between EFI main relay (Marking: EFI) and circuit opening relay and fuel pump relay and fuel pump, fuel pump and body ground (See page IN–27).

10	**Check fuel pump resistor. (See page SF–54).**

NG → **Replace fuel pump resistor.**

OK

Check for open and short in harness and connector between fuel pump relay and fuel pump resistor and fuel pump (See page IN–27).

OBD II scan tool (excluding LEXUS hand–held tester):

1	**Check operation of fuel pump.**

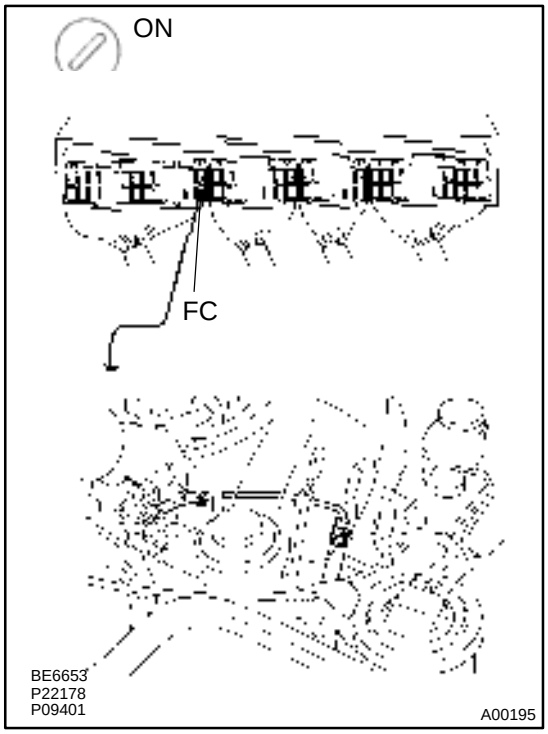

PREPARATION:

(a) Remove instrument panel speaker No.1 panel (See page SF–63).

(b) Turn ignition switch ON.

CHECK:

(a) Connect between terminal FC of ECM and body ground.

(b) Check for fuel pressure in the fuel inlet hose when it is pinched off.

OK:

There is pressure in the fuel inlet hose.

HINT:

At this time, you will hear a fuel flowing noise.

OK → **Go to step 4.**

OK

2	**Check circuit opening relay (See page DI–35).**

NG → **Repair or replace.**

OK

3	**Check voltage between terminal FC of ECM connector and body ground (See page DI–102, step 3).**

NG → **Check for open and short in harness and connector between terminal FC of ECM and circuit opening relay and fuse block.**

OK

4	**Check operation of fuel pump relay (See page DI–102, step 5).**

NG → **Replace fuel pump relay.**

OK

5	**Check operation of fuel pump.**

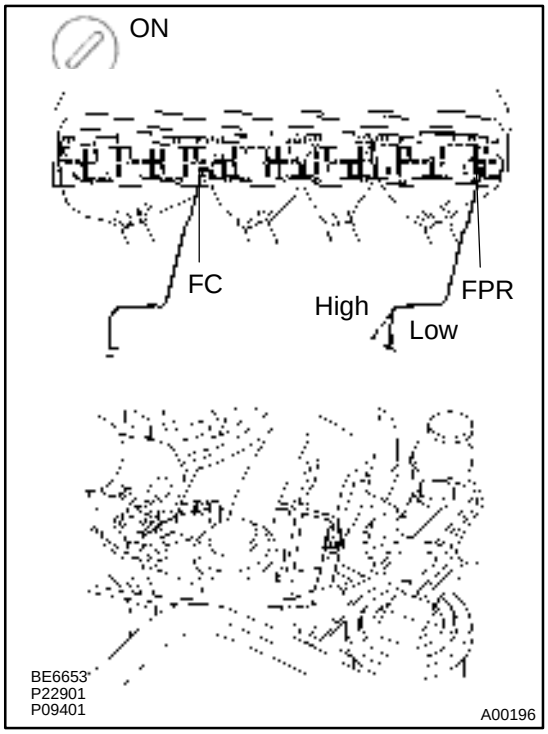

PREPARATION:

(a) Remove instrument panel speaker No.1 panel (See page SF–63).

(b) Turn the ignition switch ON.

CHECK:

(a) Connect terminal FC of ECM and body ground.

(b) Check the operation of fuel pump when terminal FPR of ECM is grounded and is not grounded.

OK:

There is pressure in the fuel inlet return hose.

HINT:

At this time, you will hear a fuel flowing noise.

FPR is grounded (Low speed)	FPR is not grounded (High speed)	
NG	NG	Go to step 6
NG	OK	Go to step 9
OK	NG	Repair or replace harness or connecter between fuel pump relay and fuel pump.

GO

6	**Check fuel pump (See page SF–6).**

NG → **Repair or replace fuel pump.**

OK

7	**Check voltage between terminal FPR of ECM connector and body ground (See page DI–102, step 6).**

NG → **Check and replace ECM (See page IN–27).**

8	**Check for open and short in harness and connector between terminal FC of ECM Connector and fuel pump relay (See page IN–27).**

NG → **Check and replace harness or connector.**

OK

Check for open or short in harness and connector between EFI main relay (Marking: EFI) and circuit opening relay and fuel pump relay and fuel pump and body ground (See page IN–27).

9	**Check fuel pump resistor (See page SF–54).**

NG → **Replace fuel pump resistor.**

OK

Check for open and short in harness and connector between fuel pump relay and fuel pump resistor and fuel pump (See page IN–27).

DI5LS–02

Fuel Pressure Control Circuit

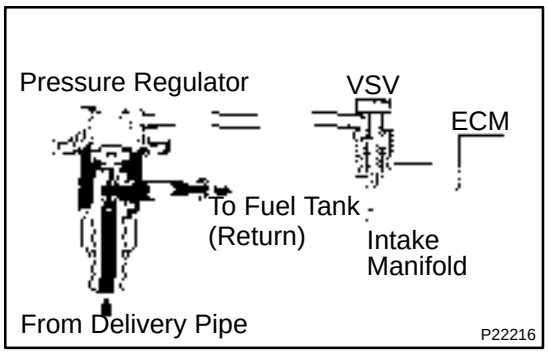

CIRCUIT DESCRIPTION

The ECM turns on a VSV (Vacuum Switching Valve) to draw the air into the diaphragm chamber of the pressure regulator if it detects that the temperature of the engine coolant is too high during engine starting.

The air drawn into the chamber increases the fuel pressure to prevent fuel vapor lock at high engine temperature in order to help the engine start when it is warm.

Fuel pressure control ends approx. 120 sec. after the engine is started.

WIRING DIAGRAM

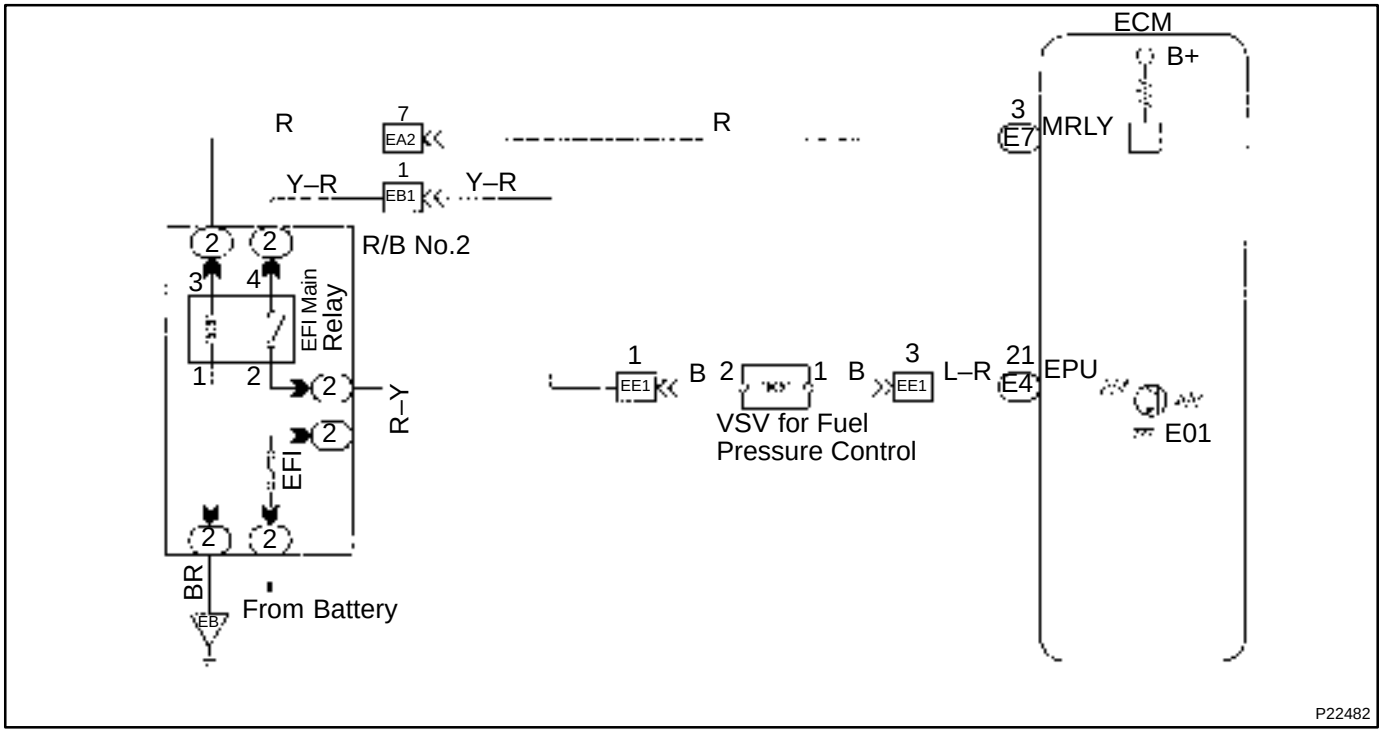

INSPECTION PROCEDURE
LEXUS hand–held tester:

1	**Connect the LEXUS hand–held tester and check operation of VSV for fuel pressure control.**

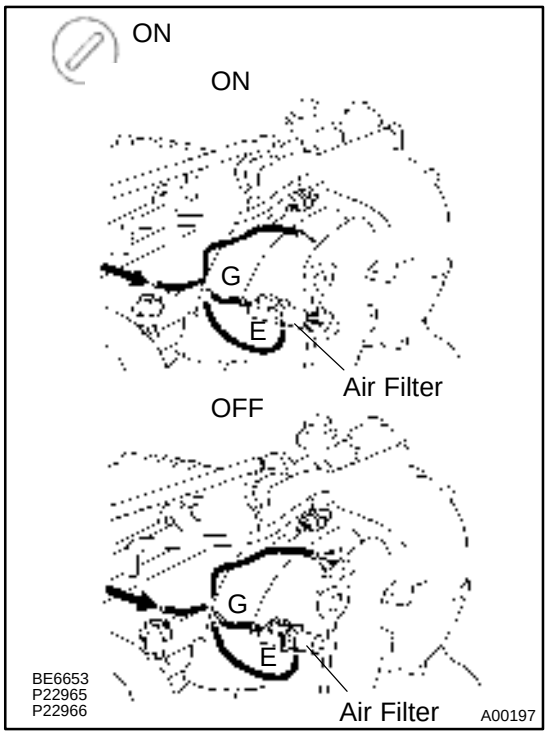

PREPARATION:

(a) Remove the fuse cover on the instrument panel.
(b) Connect the LEXUS hand–held tester to the DLC3.
(c) Turn the ignition switch ON and LEXUS hand–held tester main switch ON.
(d) Select the ACTIVE TEST mode on the LEXUS hand–held tester.

CHECK:

Check operation of VSV when VSV is operated by the LEXUS hand–held tester.

OK:

VSV is ON:
Air from pipe E is flowing out through the air filter.
VSV is OFF:
Air from pipe E is flowing out through pipe G.

OK → **Check and repair fuel pressure regulator (See page SF–17).**

NG

2	**Check VSV for fuel pressure control (See page SF–55).**

NG → **Replace VSV for fuel pressure control.**

OK

3	**Check for open and short in harness and connector between EFI main relay and ECM (See page IN–27).**

NG → **Repair or replace harness or connector.**

OK

Check and replace ECM (See page IN–27).

OBD II scan tool (excluding LEXUS hand–held tester):

1	**Check VSV for fuel pressure control (See page DI–102, step 2).**

NG → **Replace VSV for fuel pressure control.**

OK

2	**Check voltage between terminal FPU of ECM connector and body ground.**

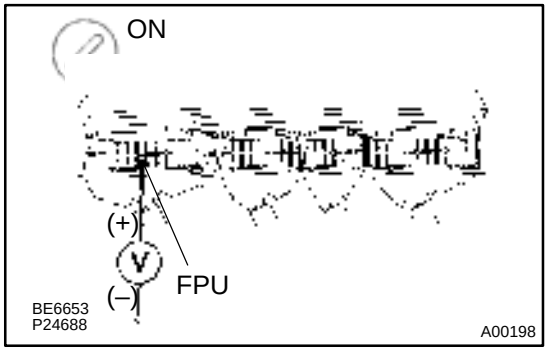

PREPARATION:

(a) Remove instrument panel speaker No.1 panel (See page SF–63).

(b) Turn the ignition switch ON.

CHECK:

Measure the voltage between terminal FPU of ECM connector and body ground.

OK:

Voltage: 9 – 14 V

NG → **Check for open and short in harness and connector between EFI main relay (marking: EFI) and ECM (See page IN–27).**

OK

3	**Check fuel pressure regulator (See page SF–17).**

NG → **Repair or replace.**

OK

Check and replace ECM (See page IN–27).

AUTOMATIC TRANSMISSION

DI5M5–02

HOW TO PROCEED WITH TROUBLESHOOTING

Items inside ▱ are titles of pages in this manual, with the page number indicated in the bottom portion. See the indicated pages for detailed explanations.

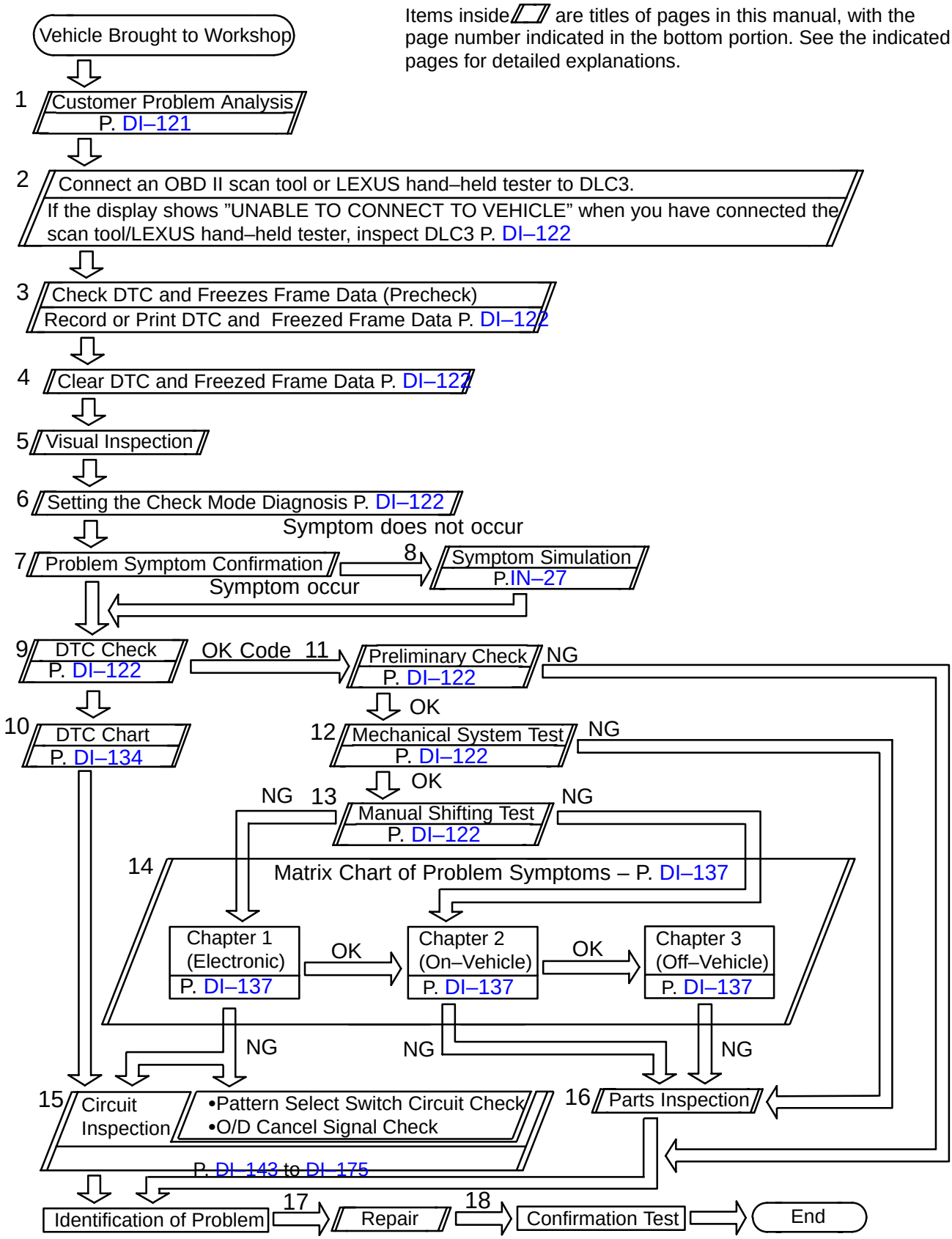

DI5M7–01

CUSTOMER PROBLEM ANALYSIS CHECK

Transmission Control System Check Sheet

Inspector's Name :

Customer's Name		Registration No.	
		Registration Year	/ /
		Frame No.	
Date Vehicle Brought In	/ /	Odometer Reading	km mile

Date Problem Occurred	/ /
How Often Does Problem Occur?	☐ Continuous ☐ Intermittent (times a day)

Symptoms	☐ Vehicle does not move (☐ Any position ☐ Particular position)
	☐ No up–shift (☐ 1st → 2nd ☐ 2nd → 3rd ☐ 3rd → O/D)
	☐ No down–shift (☐ O/D → 3rd ☐ 3rd → 2nd ☐ 2nd → 1st)
	☐ Lock–up malfunction
	☐ Shift point too high or too low
	☐ Harsh engagement (☐ N → D ☐ Lock–up ☐ Any drive position)
	☐ Slip or shudder
	☐ No kick–down
	☐ Others ( )

Check Item	Malfunction Indicator Lamp	☐ Normal	☐ Remains ON

DTC Check	1st Time	☐ Normal code	☐ Malfunction code (Code)
	2nd Time	☐ Normal code	☐ Malfunction code (Code)

DI5MA–02

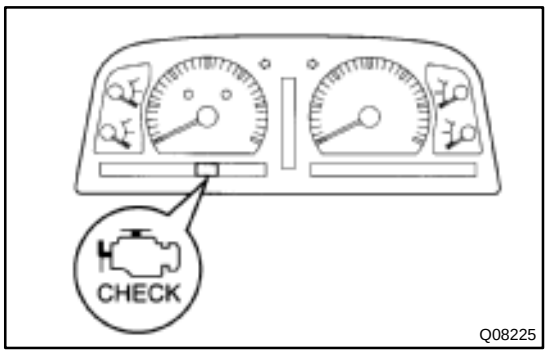

PRE–CHECK

1. DIAGNOSIS SYSTEM

(a) Description

- When troubleshooting OBD II vehicles, the only difference from the usual troubleshooting procedure is that you connect to the vehicle an OBD II scan tool complying with SAE J1987 or LEXUS hand–held tester, and read off various data output from the vehicle's ECM.
- OBD II regulations require that the vehicle's on–board computer lights up the Malfunction Indicator Lamp (MIL) on the instrument panel when the computer detects a malfunction in the computer itself or in drive system components which affect vehicle emissions. In addition to the MIL lighting up when a malfunction is detected, the applicable DTCs prescribed by SAE J2012 are recorded in the ECM memory (See page DI–134).

If the malfunction only occurs in 3 trips, the MIL goes off but the DTCs remain recorded in the ECM memory.

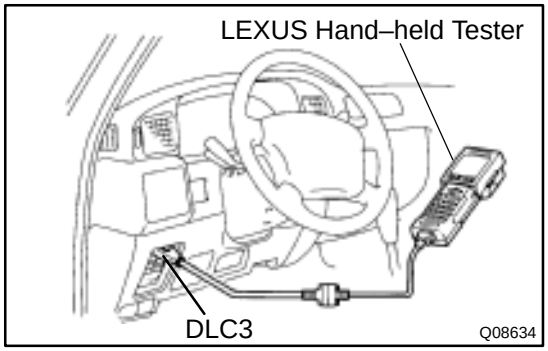

- To check the DTCs, connect an OBD II scan tool or LEXUS hand–held tester to DLC3 on the vehicle. The OBD II scan tool or LEXUS hand–held tester also enables you to erase the DTCs and check freeze frame data and various forms of engine data (For instruction book).
  DTCs include SAE controlled codes and Manufacturer controlled codes.
- SAE controlled codes must be set as prescribed by the SAE, while Manufacturer controlled codes can be set freely by the manufacturer within the prescribed limits (See DTC chart on page DI–134).

- The diagnosis system operates in normal mode during normal vehicle use, and also has a check mode for technicians to simulate malfunction symptoms and perform troubleshooting. Most DTCs use 2 trip detection logic(*) to prevent erroneous detection. By switching the ECM to check mode when troubleshooting, the technician can cause the MIL to light up and for a malfunction that is only detected once or momentarily (LEXUS hand–held tester) (See page DI–122).
- *2 trip detection logic:
  When a logic malfunction is first detected, the malfunction is temporarily stored in the ECM memory. If the same malfunction is detected again during the 2nd test drive, this 2nd detection causes the MIL to light up.

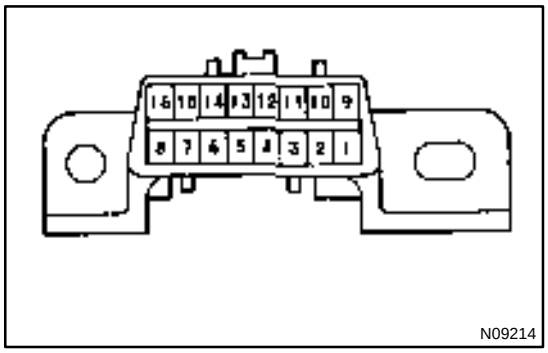

(b) Check the DLC3.
The vehicle's ECM uses V.P.W. (Variable Pulse Width) for communication to comply with SAE J1850. The terminal arrangement of DLC3 complies with SAE J1962 and matches the V.P.W. format.

Tester connection	Condition	Specified condition
2 (Bus ⊕ Line) – 5 (Signal ground)	During communication	Pulse generation
4 (Chassis Ground) – Body	Always	1 Ω or less
5 (Signal Ground) – Body	Always	1 Ω or less
16 (B+) – Body	Always	9 – 14 V

HINT:
If your display shows "UNABLE TO CONNECT TO VEHICLE" when you have connected the cable of OBD II scan tool or LEXUS hand–held tester to DLC3, turned the ignition switch ON and operated the scan tool, there is a problem on the vehicle side or tool side.

- If communication is normal when the tool is connected to another vehicle, inspect DLC3 on the original vehicle.
- If communication is still not possible when the tool is connected connected to another vehicle, the problem is probably in the tool itself, so consult the Service Department listed in the tool's instruction manual.

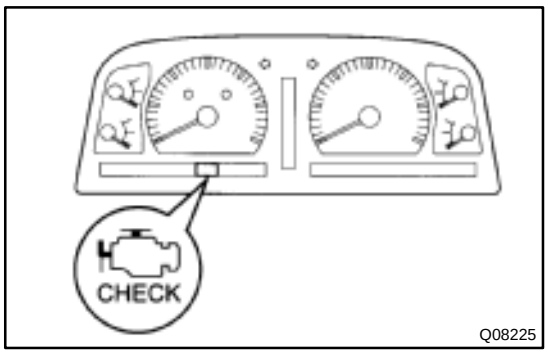

2. INSPECT DIAGNOSIS (NORMAL MODE)

(a) Check the MIL.

(1) The MIL comes on when the ignition switch is turned ON and the engine is not running.

HINT:
If the MIL does not light up, troubleshoot the combination meter (See page BE–2).

(2) When the engine is started, the MIL should go off. If the lamp remains on, the diagnosis system has detected a malfunction or abnormality in the system.

(b) Check the DTC.

NOTICE:
LEXUS hand–held tester only: When the diagnostic system is switched from normal mode to check mode, it erases all DTCs and freeze frame data recorded in normal mode. So before switching modes, always check the DTCs and freeze frame data, and note them down.

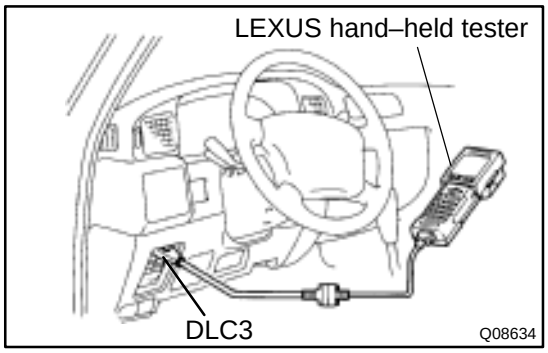

(1) Prepare an OBD II scan tool (complying with SAE J1978) or LEXUS hand–held tester.

(2) Connect the OBD II scan tool or LEXUS hand–held tester to DLC3 at the lower of the instrument panel.

(3) Turn the ignition switch ON and turn the OBD II scan tool or LEXUS hand–held tester switch ON.

(4) Use the OBD II scan tool or LEXUS hand–held tester to check the DTCs and freeze frame data and note them down (For operating instructions, see the OBD II scan tool's instruction book).

(5) See page DI–134 to confirm the details of the DTCs.

NOTICE:
When simulating symptoms with an OBD II scan tool (excluding LEXUS hand–held tester) to check the DTCs, use normal mode. For codes on the DTCs chart subject to "2 trip detection logic", turn the ignition switch off after the symptoms have been simulated the 1st time. Them repeat the simulation process again. When the program has DTCs are recorded in the ECM.

3. INSPECT DIAGNOSIS (CHECK MODE)

HINT:

LEXUS hand–held tester only:

Compared to the normal mode, the check mode has high sensing ability to detect malfunctions. Furthermore, the same diagnostic items which are detected in Normal mode can also be detected in Check mode.

(a) Check the DTC.

(1) Check the initial conditions.
- Battery positive voltage 11 V or more.
- Throttle valve fully closed.
- Transmission in P position.
- Air conditioning switched off.

(2) Turn the ignition switch OFF.

(3) Prepare the LEXUS hand–held tester.

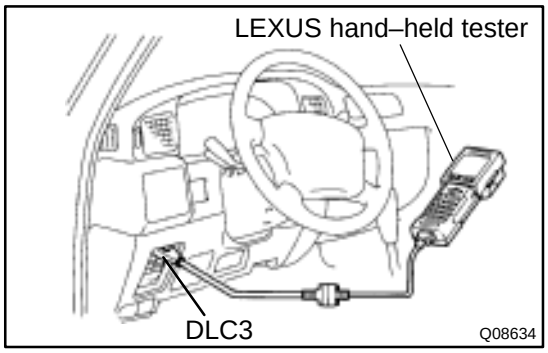

(4) Connect the LEXUS hand–held tester to DLC3 at the lower of the instrument panel.

(5) Turn the ignition switch ON and switch the LEXUS hand–held tester ON.

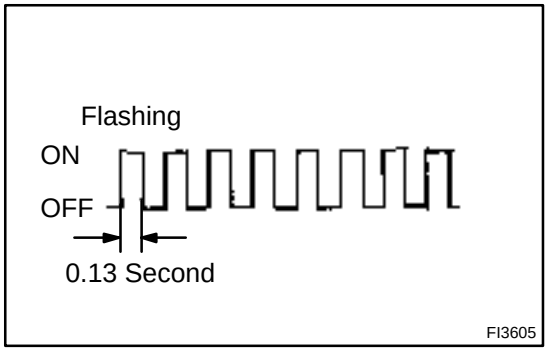

(6) Switch the LEXUS hand–held tester from Normal mode to Check mode (Check that the MIL flashes).

(7) Start the engine (MIL goes out after the engine starts).

(8) Simulate the conditions of the malfunction described by the customer.

NOTICE:

Leave the ignition switch ON until you have checked the DTCs, etc.

(9) After simulating the malfunction conditions, use the LEXUS hand–held tester diagnosis selector to check the DTCs and freeze frame data, etc..

HINT:

Take care not to turn the ignition switch OFF, as turning it off switches the diagnosis system from Check mode to Normal mode, so all DTCs, etc. are erased.

(10) After checking the DTC, inspect the applicable circuit.

(b) Clear the DTC.
The following actions will erase the DTC and freezed frame data. Operating an OBD II scan tool (complying with SAE J1978) or LEXUS hand–held tester to erase the codes (See the OBD II scan tool's instruction book for operating instructions.).

4. PROBLEM SYMPTOM CONFIRMATION

Taking into consideration the results of the customer problem analysis, try to reproduce the symptoms of the trouble. If the problem is that the transmission does not up–shift, down–shift, or the shift point is too high or too low, conduct the following road test to confirm the automatic shift schedule and simulate the problem symptoms.

5. ROAD TEST

NOTICE:

Perform the test at normal operating ATF temperature 50 – 80˚C (122 – 176˚F).

(a) D position test (NORM and PWR pattern)
Shift into the D position and fully depress the accelerator pedal and and check the following points:
(1) Check up–shift operation.
1 → 2, 2 → 3 and 3 → O/D up–shift takes place, at the shift point shown in the automatic shift schedule (See page SS–23).

HINT:
- O/D Gear Up–shift Prohibition Control (Coolant temp. is 55˚C (131˚F) or less.)
- O/D Gear Lock–up Prohibition Control (1. Brake pedal is depressed. 2. Coolant temp. is 55˚C (131˚F) or less.)
- When the 2nd start switch is on, there is no 1→2 up–shift and 2→1 down–shift.

(2) Check for shift shock and slip.
Check for shock and slip at the 1 → 2, 2 → 3 and 3 → O/D up–shifts.
(3) Check for abnormal noises and vibration.
Run at the D position lock–up or O/D gear and check for abnormal noises and vibration.

HINT:
The check for the cause of abnormal noises and vibration must be done very thoroughly as it could also be due to loss of balance in the differential torque converter clutch, etc.

(4) Check kick–down operation.
While running in the D position, 2nd, 3rd and O/D gears, check to see that the possible kick–down vehicle speed limits for 2 → 1, 3 → 2 and O/D → 3 kick–downs conform to those indicated on the automatic shift schedule (See page SS–23).
(5) Check abnormal shock and slip at kick–down.
(6) Check the lock–up mechanism.
- Drive in D position, O/D gear, at a steady speed (lock–up ON) of about 80 km/h (50 mph).
- Lightly depress the accelerator pedal and check that the engine speed does not change abruptly.

If there is a big jump in engine speed, there is no lock–up.

(b) 2 position test.
Shift into the 2 position and fully depress the accelerator pedal and check the following points:
(1) Check up–shift operation.
Check to see that the 1 → 2 up–shift takes place and that the shift point conforms to the automatic shift schedule (See page SS–23).

HINT:
- There is no O/D up–shift and lock–up in the 2 position.
- When the 2nd start switch is on, there is no 1→2 up–shift and 2→1 down–shift.

(2) Check engine braking.
While running in the 2 position and 2nd gear, release the accelerator pedal and check the engine braking effect.

(3) Check for abnormal noises during acceleration and deceleration, and for shock at up–shift and down–shift.

(c) L position test.
Shift into the 2 position and fully depress the accelerator pedal and check the following points:

(1) Check no up–shift.
While running in the L position, check that there is no up–shift to 2nd gear.

(2) Check engine braking.
While running in the L position, release the accelerator pedal and check the engine braking effect.

(3) Check for abnormal noises during acceleration and deceleration.

(d) R position test.
Shift into the R position and fully depress the accelerator pedal and check for slipping.

CAUTION:

Before conducting this test ensure that the test area is free from people and obstruction.

(e) P position test.
Stop the vehicle on a grade (more than 5˚) and after shifting into the P position, release the parking brake. Then, check to see that the parking lock pawl holds the vehicle in place.

6. BASIC INSPECTION

(a) Check the fluid level.

HINT:

- Drive the vehicle so that the engine and transmission are at normal operating temperature.
  Fluid temp.: 70 – 80˚C (158 – 176˚F)
- Only use the COOL range on the dipstick as a rough reference when the fluid is replaced or the engine does not run.

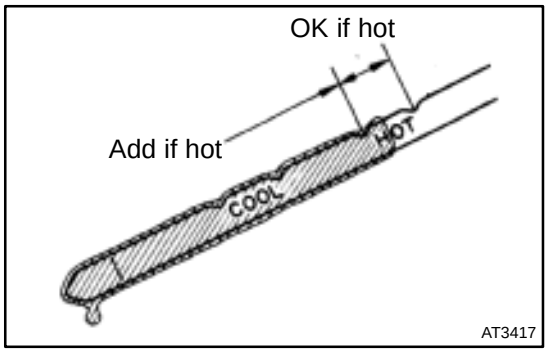

(1) Park the vehicle on a level surface and set the parking brake.
(2) With the engine idling and the brake pedal depressed, shift the shift lever into all positions from P to L position and return to P position.
(3) Pull out the dipstick and wipe it clean.
(4) Push it back fully into the pipe.
(5) Pull it out and check that the fluid level is in the HOT range.

If the level is at the low side, add new fluid.

Fluid type: ATF D–II or DEXRON®III (DEXRON®II)

NOTICE:

Do not overfill.

(b) Check the fluid condition.

If the fluid smells burnt or is black, replace it.

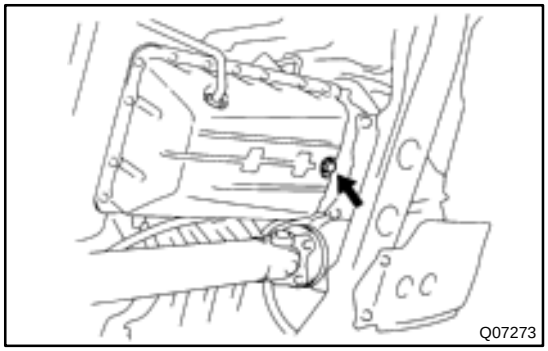

(c) Replace the ATF.
(1) Remove the drain plug and drain the fluid.
(2) Reinstall the drain plug securely.

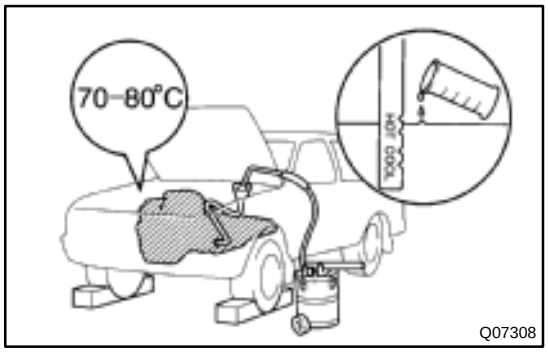

(3) With the engine OFF add new fluid through the oil filler pipe.

Fluid type: ATF D–II or DEXRON®III (DEXRON®II)

Capacity: 2.0 liters (2.1 US qts, 1.8 Imp. qts)

(4) Start the engine and shift the shift lever into all positions from P to L position and then shift into P position.

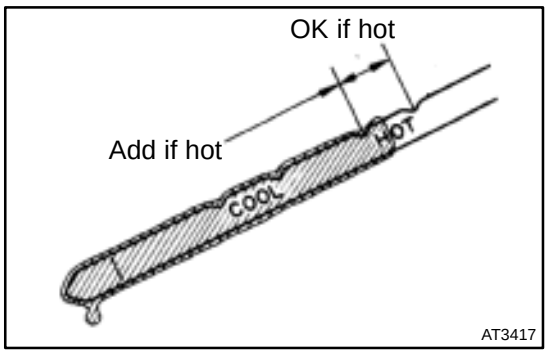

(5) With the engine idling, check the fluid level. Add fluid up to the COOL level on the dipstick.

(6) Check the fluid level at the normal operating temperature, 70 – 80˚C (158 – 176˚F), and add as necessary.

NOTICE:

Do not overfill.

(d) Check the fluid leaks.

Check for leaks in the transmission.

If there are leaks, it is necessary to repair or replace O–rings, FIPGs, oil seals, plugs or other parts.

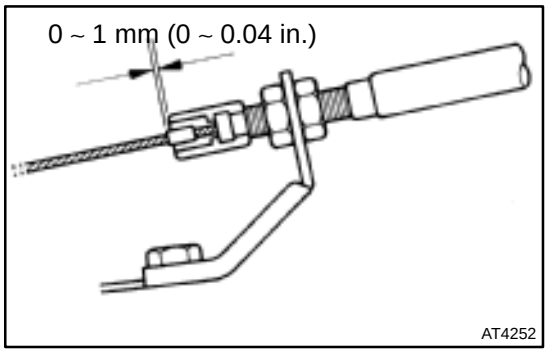

(e) Inspect and adjust the throttle cable.

(1) Check that the accelerator pedal is fully released.

(2) Check that the inner cable is not slack.

(3) Measure the distance between the outer cable end and stopper on the cable.

Standard distance: 0 – 1 mm (0 – 0.04 in.)

If the distance is not standard, adjust the cable by the adjusting nuts.

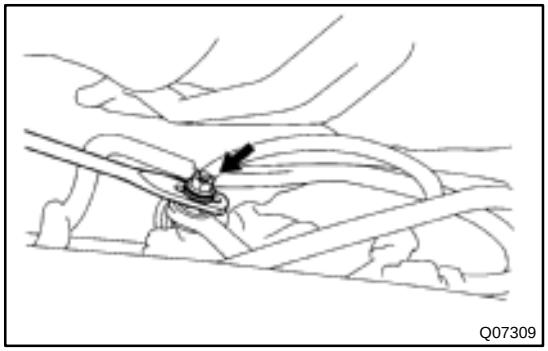

(f) Inspect and adjust the shift lever position.

When shifting the shift lever from the N position to other positions, check that the lever can be shifted smoothly and accurately to each position and that the position indicator is not aligned with the correct position.

If the indicator is not aligned with the correct position, carry out the following adjustment procedures.

(1) Loosen the nut on the shift lever.

(2) Push the control shaft fully rearward.

(3) Return the control shaft lever 2 notches to N position.

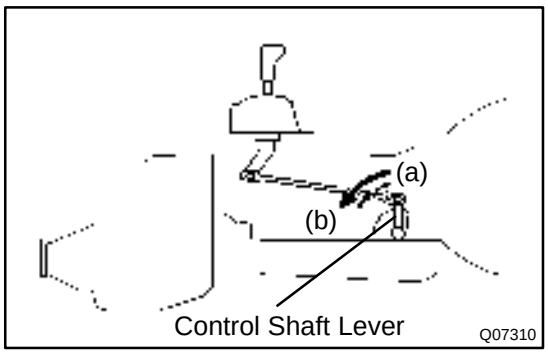

(4) Set the shift lever to N position.
(5) While holding the shift lever lightly toward the R position side, tighten the shift lever nut.
Torque: 13 N·m (130 kgf·cm, 9 ft·lbf)
(6) Start the engine and make sure that the vehicle moves forward when shifting the lever from the N to D position and reverses when shifting it to the R position.

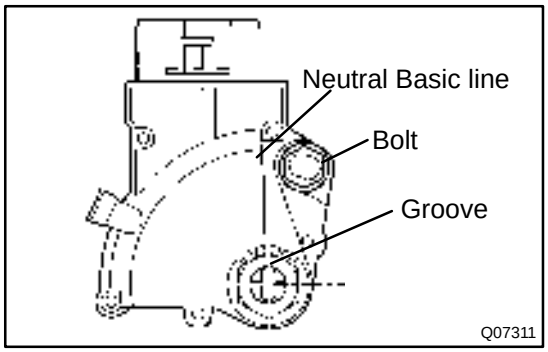

(g) Inspect and adjust the park/neutral position switch.
Check that the engine can be started with the shift lever only in the N or P position, but not in other positions.

If it is not as stated above, carry out the following adjustment procedure.

(1) Loosen the park/neutral position switch bolt and set the shift lever to the N position.
(2) Align the groove and neutral basic line.
(3) Hold in position and tighten the bolt.
Torque: 13 N·m (130 kgf·cm, 9 ft·lbf)
For continuity inspection of the park/neutral position switch, see page DI–159.

(h) Check the idle speed.
Idle speed (In N position and air conditioner OFF): 650 ± 50 rpm

7. MECHANICAL SYSTEM TESTS

(a) Measure the stall speed.
The object of this test is to check the overall performance of the transmission and engine by measuring the stall speeds in the D and R positions.

NOTICE:

- **Do the that at normal operating fluid temperature 50 – 80˚C (122 – 176˚F).**
- **Do not continuously run this test longer than 5 seconds.**
- **To ensure safety, conduct this test in a wide, clear level area which provides good traction.**
- **The stall test should always be carried out in pairs. One technician should observe the conditions of wheels or wheel stoppers outside the vehicle while the other is doing the test.**

(1) Chock the 4 wheels.
(2) Connect an OBD II scan tool or LEXUS hand–held tester to DLC3.
(3) Fully apply the parking brake.
(4) Keep your left foot pressed firmly on the brake pedal.
(5) Start the engine.
(6) Shift into the D position. Press all the way down on the accelerator pedal with your right foot. Quickly read the stall speed at this time.
Stall speed: 1,950 ± 150 rpm
(7) Do the same test in R position.
Stall speed: 1,950 ± 150 rpm

Evaluation:

Problem	Possible cause
(a) Stall speed low in D and R positions	• Engine output may be insufficient • Stator one–way clutch is operating properly HINT: If more than 600 rpm below the specified value, the torque converter could be faulty.
(b) Stall speed high in D position	• Line pressure too low • forward clutch slipping • No.2 one–way clutch not operating properly • O/D one–way clutch not operating properly
(c) Stall speed high in R position	• Line pressure too low • Direct clutch slipping • 1st and reverse brake slipping • O/D one–way clutch not operating properly
(d) Stall speed high in D and R positions	• Line pressure too low • Improper fluid level • O/D one–way clutch not operating properly

(b) Measure the time lag.
When the shift lever is shifted while the engine is idling, there will be a certain time lapse or lag before the shock can be felt. This is used for checking the condition of the O/D direct clutch, forward clutch, and 1st and reverse brake.

NOTICE:

- **Do the test at normal operating fluid temperature 50 – 80˚C (122 – 176˚F).**
- **Be sure to allow 1 minute interval between tests.**
- **Take 3 measurements and take the average value.**

(1) Fully apply the parking brake.
(2) Start the engine and check idle speed.
Idle speed (In N position and air conditioner OFF): 650 ± 50 rpm
(3) Shift the shift lever from N to D position. Using a stop watch, measure the time from when the lever is shifted until the shock is felt.
In the same manner, measure the time lag for N → R.

Time lag:
N → D Less than 1.2 seconds
N → R Less than 1.5 seconds

Evaluation (If N → D time or N → R time lag is longer than specified):

Problem	Possible cause
N → D time lag is longer	• Line pressure too low • Forward clutch worn • O/D one–way clutch not operating properly
N → R time lag is longer	• Line pressure too low • Direct clutch worn • 1st and reverse brake worn • O/D one–way clutch not operating properly

8. HYDRAULIC TEST

Measure the line pressure.

NOTICE:

- **Do the test at normal operation fluid temperature 50 – 80˚C (122 – 176˚F).**
- **The line pressure test should always be carried out in pairs. One technician should observe the conditions of wheels or wheel stoppers outside the vehicle while the other is doing the test.**
- **Be careful to prevent SST's hose from interfering with the exhaust pipe.**

(1) Warm up the ATF.

(2) Remove the test plug on the transmission case front left side and connect SST (See page AT–19 for the location to connect SST).

SST 09992–00094

(3) Fully apply the parking brake and chock the 4 wheels.

(4) Start the engine and check idling speed.

(5) Keep your left foot pressed firmly on the brake pedal and shift into D position.

(6) Measure the line pressure when the engine is idling.

(7) Depress the accelerator pedal all the way down. Quickly read the highest line pressure when engine speed reaches stall speed.

(8) In the same manner, do the test in R position.

Specified line pressure:

Condition	D position kPa (kgf/cm^2, psi)	R position kPa (kgf/cm^2, psi)
Idling	422 – 481 (4.3 – 4.9, 61 – 70)	510 – 608 (5.2 – 6.2, 74 – 88)
Stall	1,285 – 1,530 (13.1 – 15.6, 128 – 153)	1,579 – 1,932 (16.1 – 19.7, 158 – 193)

If the measured pressures are not up to specified values, recheck the throttle cable adjustment and retest.

Evaluation:

Problem	Possible cause
If the measured value at all positions are higher	• Throttle cable out of adjustment • Throttle valve defective • Regulator valve defective
If the measured value at all positions are lower	• Throttle cable out of adjustment • Throttle valve defective • Regulator valve defective • Oil pump defective • O/D direct clutch defective
If pressure is low in the D position only	• D position circuit fluid leakage • Forward clutch defective
If pressure is low in the R position only	• R position circuit fluid leakage • Direct clutch defective • 1st and reverse brake defective

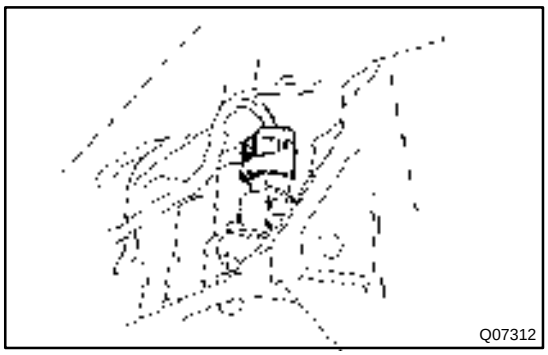

9. MANUAL SHIFTING TEST

HINT:

With this test, it can be determined whether the trouble is within the electrical circuit or is a mechanical problem in the transmission.

(a) Disconnect the solenoid wire.

(b) Inspect the manual driving operation.

- Check that the shift and gear positions correspond with the table below.
- While driving, shift through the L, 2 and D positions. Check that the gear change corresponds to the shift position.

Shift Position	Gear Position
D	O/D
2	3rd
L	1st
R	Reverse
P	Pawl Lock

HINT:

- If the L, 2 and D position gear positions are difficult to positions are difficult to distinguish, do the following read test.
- If any abnormality is found in the above test, the problem is in the transmission itself.

(c) Connect the solenoid wire.

(d) Clear the DTC (See page DI–122).

DI5MC–02

DIAGNOSTIC TROUBLE CODE CHART

If a DTC is displayed during the DTC check, check the circuit listed for that code in the table below and proceed to the page given.

DTC No. (See Page)	Detection Item	Trouble Area	MIL *	Memory
P0500 (DI–143)	Vehicle Speed Sensor Malfunction (No.1 Vehicle Speed Sensor)	• Open or short in No.1 vehicle speed sensor circuit • No.1 vehicle speed sensor • ECM	●	○
P0710 (DI–144)	Transmission Fluid Temperature Sensor Malfunction (ATF Temperature Sensor)	• Open or short in ATF temperature sensor circuit • ATF temperature sensor • ECM	●	○
P0750 (DI–146)	Shift Solenoid A Malfunction (Shift Solenoid Valve No.1)	• Shift solenoid valve No.1 is stuck open or closed • Valve body is blocked up or stuck	●	○
P0753 (DI–147)	Shift Solenoid A Electrical Malfunction (Shift Solenoid Valve No.1)	• Open or short in shift solenoid valve No.1 circuit • Shift solenoid valve No.1 • ECM	●	○
P0755 (DI–146)	Shift Solenoid B Malfunction (Shift Solenoid Valve No.2)	• Shift solenoid valve No.2 is stuck open or closed • Valve body is blocked up or stuck	●	○
P0758 (DI–147)	Shift Solenoid B Electrical Malfunction (Shift Solenoid Valve No.2)	• Open or short in shift solenoid valve No.2 circuit • Shift solenoid valve No.2 • ECM	●	○
P0770 (DI–151)	Shift Solenoid E Malfunction (Shift Solenoid Valve SL)	• Shift solenoid valve SL is stuck open or closed • Valve body is blocked up or stuck • Lock–up clutch	●	○
P0773 (DI–153)	Shift Solenoid E Electrical Malfunction (Shift Solenoid Valve SL)	• Open or short in shift solenoid valve SL circuit • Shift solenoid valve SL • ECM	●	○
P1700 (DI–156)	Vehicle Speed Sensor No.2 Malfunction (No.2 Vehicle Speed Sensor)	• Open or short in No.2 vehicle speed sensor circuit • No.2 vehicle speed sensor • ECM	●	○
P1780 (DI–159)	Park/Neutral Position Switch Malfunction	• Short in park/neutral position switch circuit • Park/neutral position switch • ECM	●	○

* : ●...MIL light up

DI5MD–02

PARTS LOCATION

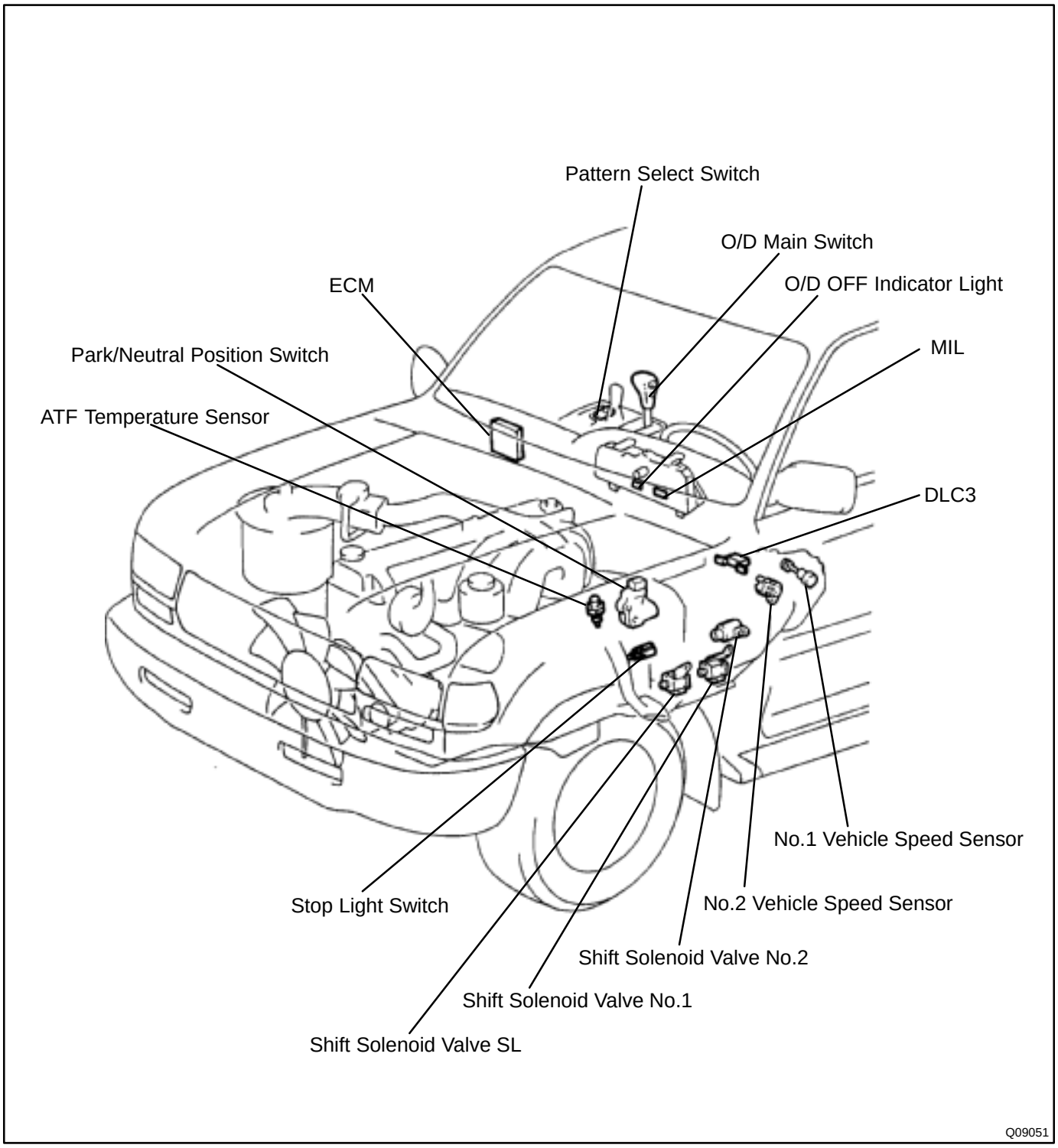

DI5MF–02

TERMINALS OF ECM

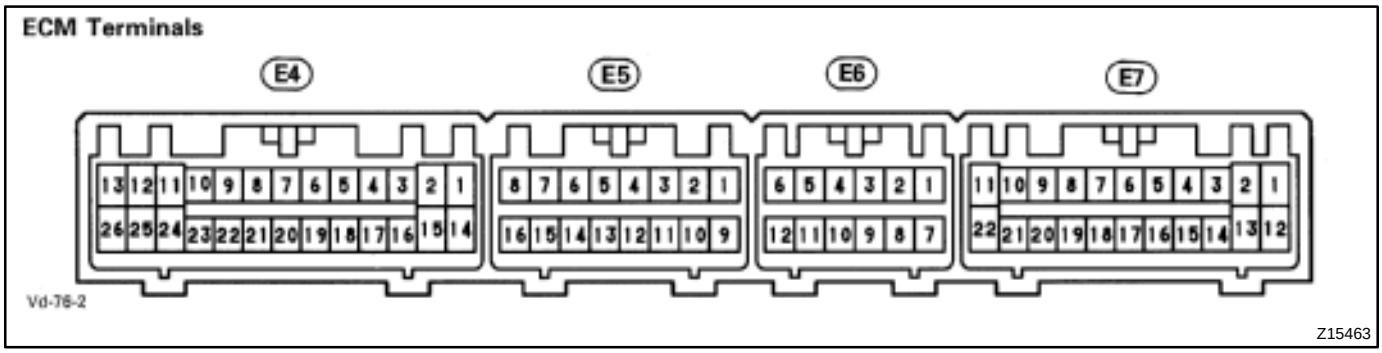

Symbols (Terminals No.)	Wiring Color	Condition	STD Voltage (V)
SPD – E1 (E7, 8 – E4, 24)	L–W ↔ BR–B	IG ON stationary (Disconnect cruise control connector)	Below 1.5
		IG ON Turn one rear wheel slowly (Disconnect cruise control connector)	Pulse signal is output Below 1.5 ↔ 4 – 6
S1 – E1 (E4, 10 – E4, 24)	R ↔ BR–B	1st or 2nd gear	9 – 14
		3rd or O/D gear	Below 1.5
S2 – E1 (E4, 9 – E4, 24)	R–Y ↔ BR–B	IG ON	Below 1.5
		2nd or 3rd gear	9 – 14
		1st or O/D gear	Below 1.5
SL – E1 (E4, 8 – E4, 24)	R–L ↔ BR–B	IG ON	Below 1.5
		Vehicle driving under lock–up position	9 – 14
$SP2^{+}$ – $SP2^{-}$ (E6, 2 – E6, 8)	V ↔ V–G	Engine is running	Pulse signal is output Below 1.5 ↔ 4 – 6
OD1 – E1 (E7, 18 – E4, 24)	G–O ↔ BR–B	IG ON	9 – 14
OD2 – E1 (E7, 19 – E4, 24)	P–L ↔ BR–B	O/D main switch ON (O/D OFF)	Below 3
		O/D main switch OFF (O/D ON)	9 – 14
OIL – E2 (E5, 12 – E5, 9)	R–W ↔ BR–B	ATF temperature: 115˚C (239˚F) or more	Below 1.5
L – E1 (E7, 17 – E4, 24)	G–W ↔ BR–B	IG ON and Shift lever L position	7.5 – 14
		IG ON and Shift lever other than L position	Below 1.5
2 – E1 (E7, 16 – E4, 24)	O ↔ BR–B	IG ON and Shift lever 2 position	7.5 – 14
		IG ON and Shift lever other than 2 position	Below 1.5
R – E1 (E7, 15 – E4, 24)	R–B ↔ BR–B	IG ON and Shift lever R position	7.5 – 14
		IG ON and Shift lever other than R position	Below 1.5
NSW – E1 (E7, 22 – E4, 24)	B–W ↔ BR–B	IG ON and Shift lever P or N position	Below 3
		IG ON and Shift lever other than P or N position	9 – 14
STP – E1 (E7, 14 – E4, 24)	G–W ↔ BR–B	Brake pedal is despressed	7.5 – 14
		Brake pedal is respressed	Below 1.5
PWR – E1 (E7, 20 – E4, 24)	P–B ↔ BR–B	IG ON and Pattern select switch ”NORM”	Below 1.5
		IG ON and Pattern select switch ”PWR”	7.5 – 14
HOLD – E1 (E4, 3 – E4, 24)	O ↔ BR–B	IG ON and 2nd start switch ON	9 – 14
		IG ON and 2nd start switch OFF	Below 1.5
HI – E1 (E4, 18 – E6, 24)	R–W ↔ BR–B	IG ON and 2nd start mode	Below 1.5
		IG ON and Except 2nd start mode	7.5 – 14

DI5MH–02

PROBLEM SYMPTOMS TABLE

If a normal code is displayed during the diagnostic trouble code check but the trouble still occurs, check the circuits for each symptom in the order given in the charts on the following pages and proceed to the page given for troubleshooting.

The Matrix Chart is divided into 3 chapters.

Chapter 1: Electronic Circuit Matrix Chart
Chapter 2: On–vehicle Repair Matrix Chart
Chapter 3: Off–vehicle repair Matrix Chart

- If the instruction ”Proceed to next circuit inspection shown on matrix chart” is given in the flow chart for each circuit, proceed to the circuit with the next highest number in the table to continue the check.
- If the trouble still occurs even though there are no abnormalities in any of the other circuits, then check and replace the ECM.

Chapter 1: Electronic Circuit Matrix Chart

Symptom	Suspect Area	See page
Vehicle does not move in any forward position and reverse position	1. On–vehicle repair matrix chart 2. Off–vehicle repair matrix chart	DI–137 DI–137
Vehicle does not move in particular position or positions	1. On–vehicle repair matrix chart 2. Off–vehicle repair matrix chart	DI–137 DI–137
No up–shift (1st → 2nd)	1. Shift solenoid valve No.1 and No.2 circuit 2. Throttle position sensor circuit 3. Vehicle speed sensor circuit 4. On–vehicle repair matrix chart 5. Park/neutral position switch circuit 6. Off–vehicle repair matrix chart 7. ECM	DI–147 DI–35 DI–82 DI–137 DI–159 DI–137 DI–136
No up–shift (2nd → 3rd)	1. Shift solenoid valve No.1 and No.2 circuit 2. Throttle position sensor circuit 3. Vehicle speed sensor circuit 4. On–vehicle repair matrix chart 5. Park/neutral position switch circuit 6. Off–vehicle repair matrix chart 7. ECM	DI–147 DI–35 DI–82 DI–137 DI–159 DI–137 DI–136
No up–shift (3rd → O/D)	1. O/D main switch circuit 2. Shift solenoid valve No.1 and No.2 circuit 3. Throttle position sensor circuit 4. Vehicle speed sensor circuit 5. Park/neutral position switch circuit 6. O/D cancel signal circuit 7. Engine coolant temp. sensor circuit 8. On–vehicle repair matrix chart 9. Off–vehicle repair matrix chart 10. ECM	DI–164 DI–147 DI–35 DI–82 DI–159 DI–162 DI–30 DI–137 DI–137 DI–136
No down–shift (O/D → 3rd)	1. Throttle position sensor circuit 2. Shift solenoid valve No.1 and No.2 circuit 3. Vehicle speed sensor circuit 4. On–vehicle repair matrix chart 5. ECM	DI–35 DI–147 DI–82 DI–137 DI–136

Symptom	Suspect Area	See page
No down–shift (3rd → 2nd)	1. Throttle position sensor circuit 2. Shift solenoid valve No.1 and No.2 circuit 3. Vehicle speed sensor circuit 4. On–vehicle repair matrix chart 5. ECM	DI–35 DI–147 DI–82 DI–137 DI–136
No down–shift (2nd → 1st)	1. Throttle position sensor circuit 2. Shift solenoid valve No.1 and No.2 circuit 3. Vehicle speed sensor circuit 4. On–vehicle repair matrix chart 5. Off–vehicle repair matrix chart 6. ECM	DI–35 DI–147 DI–82 DI–137 DI–137 DI–136
No lock–up	1. Shift solenoid valve SL circuit 2. Throttle position sensor circuit 3. Stop light circuit 4. Vehicle speed sensor circuit 5. Park/neutral position switch circuit 6. Engine coolant temp. sensor circuit 7. On–vehicle repair matrix chart 8. Off–vehicle repair matrix chart 9. ECM	DI–153 DI–35 DI–175 DI–82 DI–159 DI–30 DI–137 DI–137 DI–136
No lock–up off	1. Throttle position sensor circuit 2. Shift solenoid valve SL circuit 3. Stop light circuit 4. Vehicle speed sensor circuit 5. On–vehicle repair matrix chart 6. Off–vehicle repair matrix chart 7. ECM	DI–35 DI–153 DI–175 DI–82 DI–137 DI–137 DI–136
Shift point too high or too low	1. Throttle position sensor circuit 2. Park/neutral position switch circuit 3. Pattern select switch circuit 4. Vehicle speed sensor circuit 5. ECM	DI–35 DI–159 DI–169 DI–82 DI–136
Up–shift to 2nd while in L position	1. Park/neutral position switch circuit 2. ECM	DI–159 DI–136
Up–shift to 3rd while in L position	1. Park/neutral position switch circuit 2. ECM	DI–159 DI–136
Up–shift to O/D from 3rd	1. O/D main switch circuit 2. ECM	DI–164 DI–136
Up–shift to O/D from 3rd while engine is cold	1. Engine coolant temp. sensor circuit 2. On–vehicle repair matrix chart 3. Off–vehicle repair matrix chart 4. ECM	DI–30 DI–137 DI–137 DI–136
Harsh engagement (N → D)	1. Throttle position sensor circuit 2. Park/neutral position switch circuit 3. On–vehicle repair matrix chart 4. Off–vehicle repair matrix chart 5. ECM	DI–35 DI–159 DI–137 DI–137 DI–136
Harsh engagement (Lock–up)	1. Throttle position sensor circuit 2. Shift solenoid valve SL circuit 3. Vehicle speed sensor circuit 4. On–vehicle repair matrix chart 5. Off–vehicle repair matrix chart 6. ECM	DI–35 DI–153 DI–82 DI–137 DI–137 DI–136

Symptom	Suspect Area	See page
Harsh engagement (Any driving position)	1. Throttle position sensor circuit 2. Vehicle speed sensor circuit 3. On–vehicle repair matrix chart 4. Off–vehicle repair matrix chart 5. ECM	DI–35 DI–82 DI–137 DI–137 DI–136
Slip or shudder (Forward and reverse)	1. On–vehicle repair matrix chart 2. Off–vehicle repair matrix chart	DI–137 DI–137
Slip or shudder (Particular position)	1. On–vehicle repair matrix chart 2. Off–vehicle repair matrix chart	DI–137 DI–137
No engine braking	1. On–vehicle repair matrix chart 2. Off–vehicle repair matrix chart	DI–137 DI–137
Poor acceleration	1. Throttle position sensor circuit 2. Vehicle speed sensor circuit 3. Shift solenoid valve No.1 and No.2 circuit 4. Shift solenoid valve SL circuit 5. Off–vehicle repair matrix chart 6. ECM	DI–35 DI–82 DI–147 DI–153 DI–137 DI–136
No pattern select	1. Pattern select switch circuit 2. ECM	DI–169 DI–136
No 2nd start	1. Pattern select switch circuit 2. Shift solenoid valve No.1 and No.2 circuit 3. ECM	DI–172 DI–147 DI–136
Large shift shock or engine stalls when starting off or stopping	1. Shift solenoid valve SL circuit 2. Off–vehicle repair matrix chart 3. ECM	DI–153 DI–137 DI–136

Chapter 2: On–Vehicle Repair
(★: A340F, A343F AUTOMATIC TRANSMISSION Repair Manual Pub. No. RM479U)

Symptom	Suspect Area	See page
Vehicle does not move in any forward position and reverse position	1. Throttle cable 2. Transmission control rod 3. Manual valve 4. Parking lock pawl 5. Off–vehicle repair matrix chart	DI–122 DI–122 ★ ★ DI–137
Vehicle does not move in R position	1. Off–vehicle repair matrix chart	DI–137
Vehicle does not move in particular position or positions (except R position)	1. Off–vehicle repair matrix chart	DI–137
No up–shift (1st → 2nd)	1. 1–2 shift valve 2. Off–vehicle repair matrix chart	★ DI–137
No up–shift (2nd → 3rd)	1. 2–3 shift valve 2. Off–vehicle repair matrix chart	★ DI–137
No up–shift (3rd → O/D)	1. 3–4 shift valve 2. Off–vehicle repair matrix chart	★ DI–137
No down–shift (O/D → 3rd)	1. 3–4 shift valve 2. Off–vehicle repair matrix chart	★ DI–137
No down–shift (3rd → 2nd)	1. 2–3 shift valve 2. Off–vehicle repair matrix chart	★ DI–137
No down–shift (2nd → 1st)	1. 1–2 shift valve 2. Off–vehicle repair matrix chart	★ DI–137
No lock–up or No lock–up off	1. Lock–up control valve 2. Lock–up relay valve 3. Off–vehicle repair matrix chart	★ ★ DI–137
Harsh engagement (N → D)	1. Accumulator control valve 2. Solenoid modulator valve 3. C_1 accumulator 4. Orifice control valve 5. Off–vehicle repair matrix chart	★ ★ ★ ★ DI–137
Harsh engagement (Lock–up)	1. Lock–up control valve 2. Lock–up relay valve 3. Solenoid relay valve 4. Off–vehicle repair matrix chart	★ ★ ★ DI–137
Harsh engagement (N → R)	1. Accumulator control valve 2. C_2 accumulator 3. Solenoid modulator valve 4. Off–vehicle repair matrix chart	★ ★ ★ DI–137
Harsh engagement (N → L)	1. Low coast modulator valve	★
Harsh engagement (1st → 2nd → 3rd → O/D)	1. Accumulator control valve 2. Solenoid modulator valve	★ ★
Harsh engagement (2nd → 3rd)	1. Accumulator control valve 2. Solenoid modulator valve 3. C_2 accumulator 4. Off–vehicle repair matrix chart	★ ★ ★ DI–137
Harsh engagement (3rd → O/D)	1. Accumulator control valve 2. Solenoid modulator valve 3. B_0 accumulator 4. Off–vehicle repair matrix chart	★ ★ ★ DI–137

Symptom	Suspect Area	See page
Harsh engagement (O/D → 3rd)	1. Accumulator control valve 2. Solenoid modulator valve 3. C_0 accumulator 4. Off–vehicle repair matrix chart	★ ★ ★ DI–137
Slip or shudder (Forward and reverse)	1. Throttle cable 2. Transmission control rod 3. Oil strainer 4. Pressure relief valve 5. Off–vehicle repair matrix chart	DI–122 DI–122 ★ ★ DI–137
Slip or shudder (Particular position)	1. Throttle cable 2. Transmission control rod 3. Off–vehicle repair matrix chart	DI–122 DI–122 DI–137
No engine braking (1st: L position)	1. Low coast modulator valve 2. Off–vehicle repair matrix chart	★ DI–137
No engine braking (2nd: 2 position)	1. 2nd coast modulator valve 2. Off–vehicle repair matrix chart	★ DI–137
No kick–down	1. 1–2 shift valve 2. 2–3 shift valve	★ ★

Chapter 3: Off–Vehicle Repair
(★: A340F, A343F AUTOMATIC TRANSMISSION Repair Manual Pub. No. RM479U)

Symptom	Suspect Area	See page
Vehicle does not move in any forward position and reverse position	1. O/D one–way clutch (F_0) 2. O/D direct clutch (C_0) 3. O/D planetary gear unit 4. Torque converter clutch	★ ★ ★ ★
Vehicle does not move in R position	1. Front and rear planetary gear unit 2. Direct clutch (C_2) 3. 1st and reverse brake (B_3) 4. O/D direct clutch (C_0)	★ ★ ★ ★
No up–shift (1st → 2nd)	1. 2nd brake (B_2) 2. No. 1 one–way clutch (F_1)	★ ★
No up–shift (2nd → 3rd)	1. Direct clutch (C_2)	★
No up–shift (3rd → O/D)	1. O/D brake (B_0)	★
No lock–up or No lock–up off	1. Torque converter clutch	★
Harsh engagement (N → D)	1. Forward clutch (C_1) 2. O/D one–way clutch (F_0) 3. No. 2 one–way clutch (F_2)	★ ★ ★
Harsh engagement (N → R)	1. Direct clutch (C_2) 2. 1st and reverse brake (B_3) 3. O/D one–way clutch (F_0)	★ ★ ★
Harsh engagement (N → 2)	1. Forward clutch (C_1) 2. O/D one–way clutch (F_0) 3. No. 2 one–way clutch (F_2)	★ ★ ★
Harsh engagement (N → L)	1. Forward clutch (C_1) 2. 1st and reverse brake (B_3) 3. O/D one–way clutch (F_0) 4. No. 2 one–way clutch (F_2)	★ ★ ★ ★
Harsh engagement (Lock–up)	1. Torque converter clutch	★
Slip or shudder (Forward and reverse: After warm–up)	1. Torque converter clutch 2. O/D one–way clutch (F_0) 3. O/D direct clutch (C_0)	★ ★ ★
Slip or shudder (Particular position: Just after engine starts)	1. Torque converter clutch	★
Slip or shudder (R position)	1. Direct clutch (C_2) 2. 1st and reverse brake (B_3)	★ ★
Slip or shudder (1st)	1. Forward clutch (C_1) 2. No. 2 one–way clutch (F_2)	★ ★
Slip or shudder (2nd)	1. 2nd brake (B_2) 2. 2nd coast brake (B_1) 3. No. 1 one–way clutch (F_1)	★ ★ ★
Slip or shudder (3rd)	1. Direct clutch (C_2)	★
Slip or shudder (O/D)	1. O/D brake (B_0)	★
No engine braking (1st ~ 3rd: D position)	1. 2nd brake (B_2)	★
No engine braking (1st: L position)	1. 1st and reverse brake (B_3)	★
No engine braking (2nd: 2 position)	1. 2nd coast brake (B_1)	★
Poor acceleration (All position)	1. Torque converter clutch	★
Poor acceleration (O/D)	1. O/D direct clutch (C_0) 2. O/D planetary gear unit	★ ★
Engine stalls when starting off or stopping	1. Torque converter clutch	★

DI5MI–01

CIRCUIT INSPECTION

DTC	P0500	Vehicle Speed Sensor Malfunction (No.1 Vehicle Speed Sensor)

See page DI–82.

DI5MK–02

DTC	P0710	Transmission Fluid Temp. Sensor Malfunction (ATF Temp. Sensor)

CIRCUIT DESCRIPTION

The ATF Temperature sensor converts fluid temperature into a resistance value which is input into the ECM.

DTC No.	DTC Detection Condition	Trouble Area
P0710	Either (a) or (b) is detected for 0.5 sec. or more. (a) Temp. sensor resistance is less than 79 Ω (b) After the engine has been operating for 15 minutes or more, the resistance at the temp. sensor is more than 156 kΩ	• Open or short in ATF temp. sensor • ATF temp. sensor • ECM

WIRING DIAGRAM

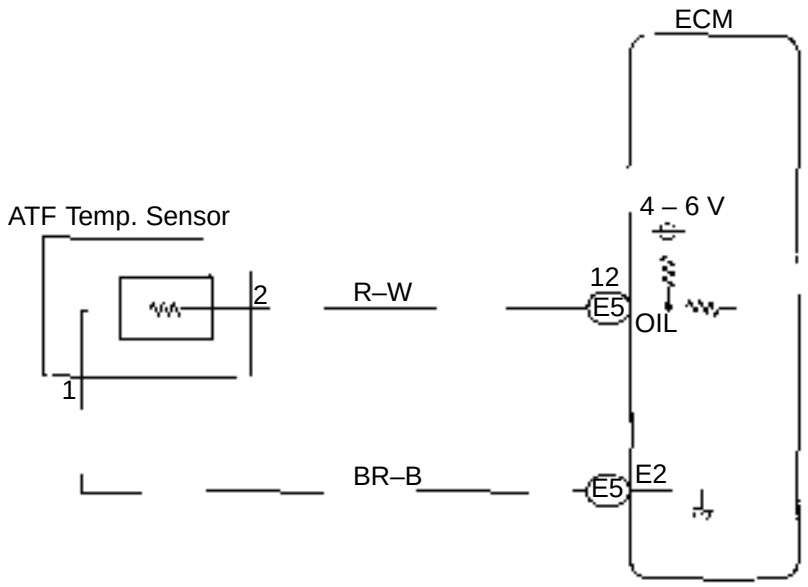

Q04346

INSPECTION PROCEDURE

1	Check ATF Temp. Sensor.

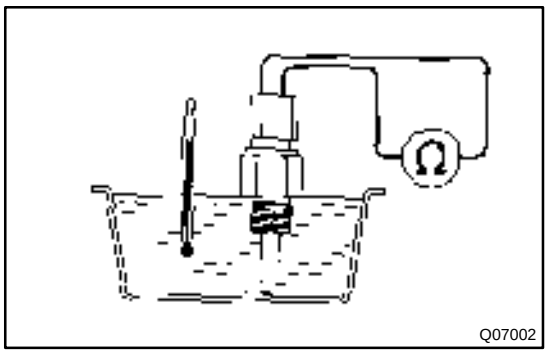

PREPARATION:
Remove the ATF temperature sensor.
CHECK:
Measure the resistance between terminals of ATF temperature sensor at 20˚C (68˚F) and 110˚C (230˚F).
OK:

Resistance (Approx.):
20˚C (68˚F): 12.1 kΩ
110˚C (230˚F): 780 Ω

NG → **Replace ATF Temp. sensor.**

OK

2	Check harness and connector between ATF Temp. sensor and ECM (See page IN–27).

NG → **Repair or replace harness or connector.**

OK

Check and replace ECM (See page IN–27).

DTC	P0750, P0755	Shift Solenoid A/B Malfunction (Shift Solenoid Valve No.1/No.2)

SYSTEM DESCRIPTION

The ECM uses signals from the vehicle speed sensor to detect the actual gear position (1st, 2nd, 3rd or O/D gear).
Then the ECM compares the actual gear with the shift schedule in the ECM memory to detect mechanical trouble of the shift solenoid valves and valve body.

DTC No.	DTC Detection Condition	Trouble Area
P0750 P0755	During normal driving, the gear required by the ECM does not match the actual gear (2 trip detection logic)	• Shift solenoid valve No.1/No.2 is stuck open or closed • Valve body is blocked up or stuck

HINT:
Check the shift solenoid valve No.1 when DTC P0750 is output and check shift solenoid valve No.2 when DTC P0755 is output.

INSPECTION PROCEDURE

1	**Check shift solenoid valve No.1 or No.2 operation.**

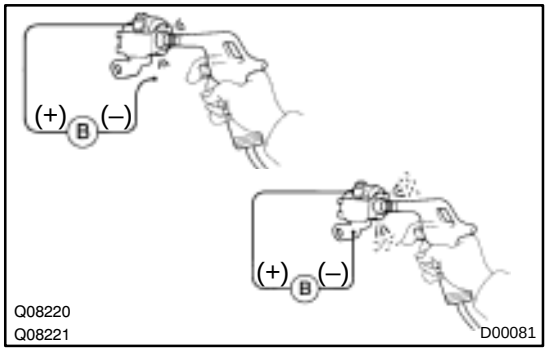

PREPARATION:
(a) Remove the oil pan.
(b) Remove the shift solenoid valve No.1 or No.2.

CHECK:
(a) Applying 490 kPa (5 kgf/cm^2, 71 psi) of compressed air, check that the solenoid valve does not leak air.
(b) When battery positive voltage is supplied to the shift solenoid valve, check that the solenoid valve opens.

NG → **Replace the shift solenoid valve No.1 or No.2.**

OK

2	**Check valve body (See page DI–137).**

NG → **Repair or replace the valve body.**

OK

Replace the transmission (See page AT–19).

DTC	P0753, P0758	Shift Solenoid A/B Electrical Malfunction (Shift Solenoid Valve No.1/No.2)

CIRCUIT DESCRIPTION

Shifting from 1st to O/D is performed in combination with ON and OFF of the shift solenoid valves No.1 and No.2 controlled by ECM. If an open or short circuit occurs in either of the shift solenoid valves, the ECM controls the remaining normal shift solenoid valve to allow the vehicle to be operated smoothly (Fail safe function).

Fail safe function:

If either of the shift solenoid valve circuits develops an open or short, the ECM turns the other shift solenoid ON and OFF to shift to the gear positions shown in the table below. The ECM also turns the shift solenoid valve SL OFF at the same time. If both solenoids are malfunction, hydraulic control cannot be performed electronically and must be done manually.

Manual shifting as shown in the following table must be done (In the case of a short circuit, the ECM stops sending current to the short circuited solenoid).

Position	NORMAL			SHIFT SOLENOID NO.1 MALFUNCTIONING			SHIFT SOLENOID NO.2 MALFUNCTIONING			BOTH SOLENOIDS MALFUNCTIONING
	Solenoid valve		Gear	Solenoid valve		Gear	Solenoid valve		Gear	Gear when shift selector is manually operated
	No.1	No.2		No.1	No.2		No.1	No.2		
D	ON	OFF	1st	X	ON	3rd	ON	X	1st	O/D
	ON	ON	2nd	X	ON	3rd	OFF	X	O/D	O/D
	OFF	ON	3rd	X	ON	3rd	OFF	X	O/D	O/D
	OFF	OFF	O/D	X	OFF	O/D	OFF	X	O/D	O/D
2	ON	OFF	1st	X	ON	3rd	ON	X	1st	3rd
	ON	ON	2nd	X	ON	3rd	OFF	X	3rd	3rd
	OFF	ON	3rd	X	ON	3rd	OFF	X	3rd	3rd
L	ON	OFF	1st	X	OFF	1st	ON	X	1st	1st
	ON	ON	2nd	X	ON	2nd	ON	X	1st	1st

X: Malfunctions

HINT:

Check the shift solenoid valve No.1 when DTC P0753 is output and check the shift solenoid valve No.2 when DTC P0758 is output.

DTC No.	DTC Detection Condition	Trouble Area
P0753 P0758	The ECM checks for an open or short circuit in the shift solenoid valves No.1 and No.2 circuit when it changes. The ECM records DTC P0753 or P0758 if condition (a) or (b) is detected once, but it does not light up MIL. After ECM detects condition (a) or (b) continuously 8 times or more in one–trip, it causes the MIL light up until condition (a) or (b) disappears. After that, if the ECM detects condition a) or b) once, it starts lighting up MIL again. (a) Solenoid resistance is 8 Ω or less (short circuit) when the solenoid is energized. (b) Solenoid resistance is 100 kΩ or more (open circuit) when the solenoid is not energized.	• Open or short in shift solenoid valve No.1/No.2 circuit • Shift solenoid valve No.1/No.2 • ECM

WIRING DIAGRAM

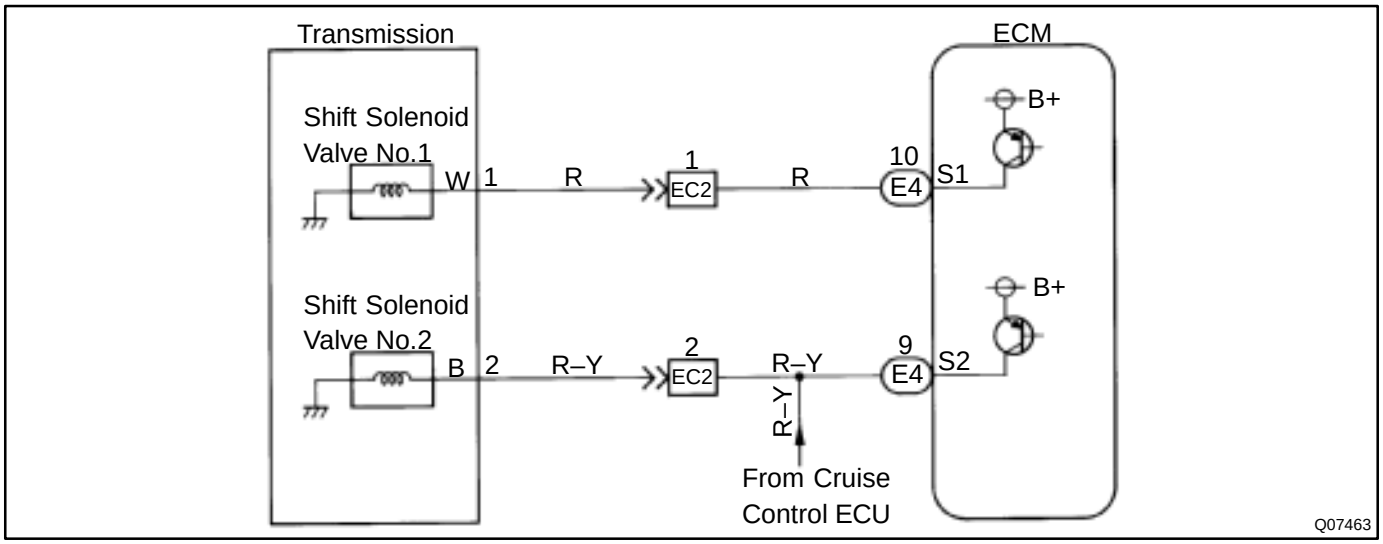

INSPECTION PROCEDURE

1	**Measure resistance between terminal S1 or S2 of ECM and body ground.**

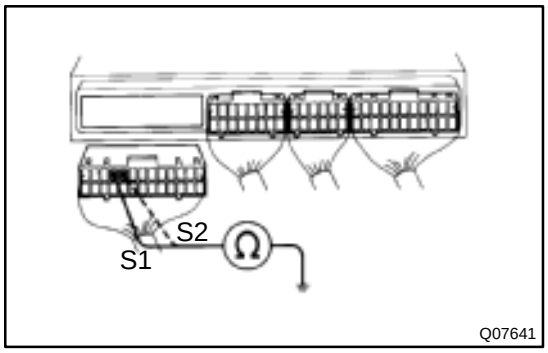

PREPARATION:
Disconnect the connector from ECM.
CHECK:
Measure the resistance between terminal S1 or S2 of ECM and body ground.
OK:
Resistance: 11 – 15 Ω

OK → **Check and replace ECM.**

NG

2	**Check harness and connector between ECM and automatic transmission solenoid connector (See page IN–27).**

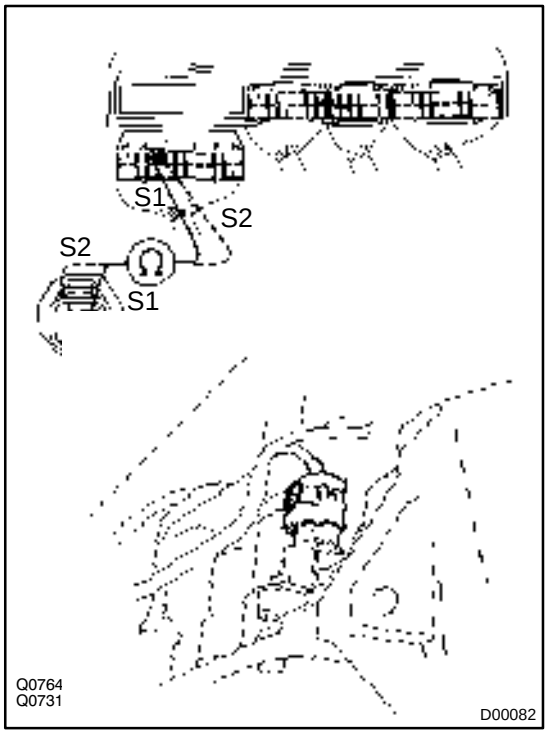

PREPARATION:

Disconnect the solenoid connector from the automatic transmission.

CHECK:

Check the harness and connector between terminal S1 or S2 of ECM and terminal S1 or S2 of solenoid connector.

OK:

There is no open and no short circuit.

NG → **Repair or replace harness or connector.**

OK

3	Check shift solenoid valve No.1 or No.2.

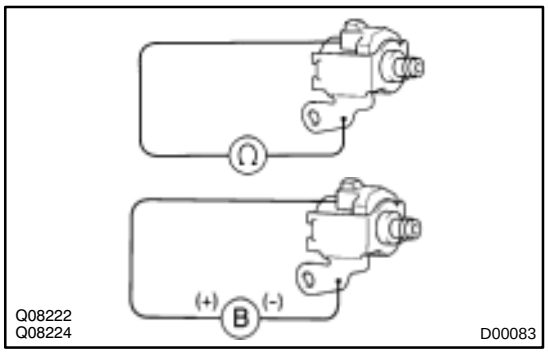

PREPARATION:

(a) Remove the oil pan.

(b) Remove the shift solenoid valve No.1 or No.2.

CHECK:

(a) Measure the resistance between solenoid connector and body ground.

(b) Connect positive (+) lead to terminal of solenoid connector, negative (–) lead to solenoid body.

OK:

(a) Resistance: 11 – 15 Ω

(b) The solenoid makes an operating noise.

NG → **Replace the solenoid valve.**

OK ↓

Repair or replace solenoid wire.

DI5MQ–02

DTC	P0770	Shift Solenoid E Malfunction (Shift Solenoid Valve SL)

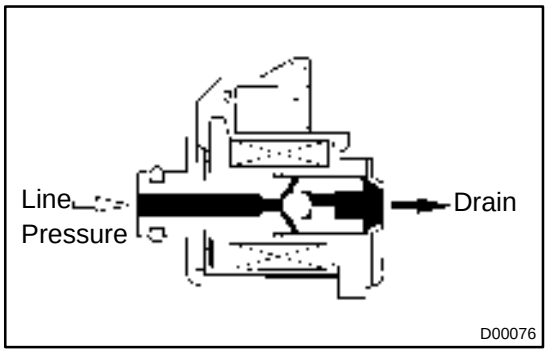

SYSTEM DESCRIPTION

The ECM uses the signals from the Throttle position sensor, Air–flow meter and crankshaft position sensor to monitor the engagement condition of the lock–up clutch.
Then the ECM compares the engagement condition of the lock–up clutch with the lock–up schedule in the ECM memory to detect mechanical trouble of the shift solenoid valve SL, valve body and torque converter clutch.

DTC No.	DTC Detection Condition	Trouble Area
P0770	Lock–up does not occur when driving in the lock–up range (normal driving at 80 km/h [50 mph]), or lock–up remains ON in the lock–up OFF range. (2 trip detection logic)	• Shift solenoid valve SL is stuck open or closed • Valve body blocked up or stuck • Lock–up clutch

INSPECTION PROCEDURE

1	Check solenoid valve SL operation.

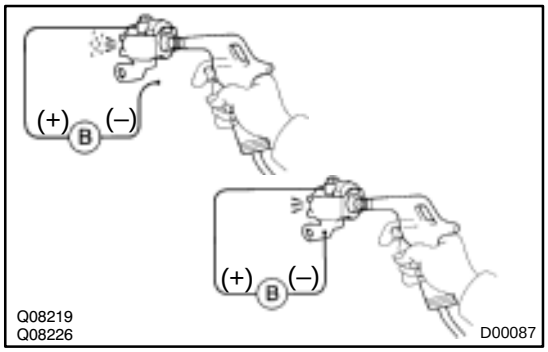

PREPARATION:

(a) Remove the oil pan.

(b) Remove the shift solenoid valve SL.

CHECK:

(a) Applying 490 kPa (5 kgf/cm^2, 71 psi) of compressed air, check that the solenoid valve opens.

(b) When battery voltage is supplied to the shift solenoid valve, check that the solenoid valve does not leak air.

NG → **Replace solenoid valve SL.**

OK

2	**Check valve body (See page DI–137).**

NG → **Repair or replace valve body.**

OK ↓

Replace torque converter clutch (See page AT–27).

DI5MR–02

DTC	P0773	Shift Solenoid E Electrical Malfunction (Shift Solenoid Valve SL)

CIRCUIT DESCRIPTION

The shift solenoid valve SL is turned ON and OFF by signals from the ECM to control the hydraulic pressure acting on the lock–up relay valve, which then controls operation of the lock–up clutch.
Fail safe function:
If the ECM detects a malfunction, it turns the shift solenoid valve SL OFF.

DTC No.	DTC Detection Condition	Trouble Area
P0773	Either (a) or (b) are detected for 1 time. (2 trip detection logic) (a) Solenoid resistance is 8 Ω or less (short circuit) when the solenoid is energized. (b) Solenoid resistance is 100 kΩ or more (open circuit) when the solenoid is not energized.	• Open or short in shift solenoid valve SL circuit • Shift solenoid valve SL • ECM

WIRING DIAGRAM

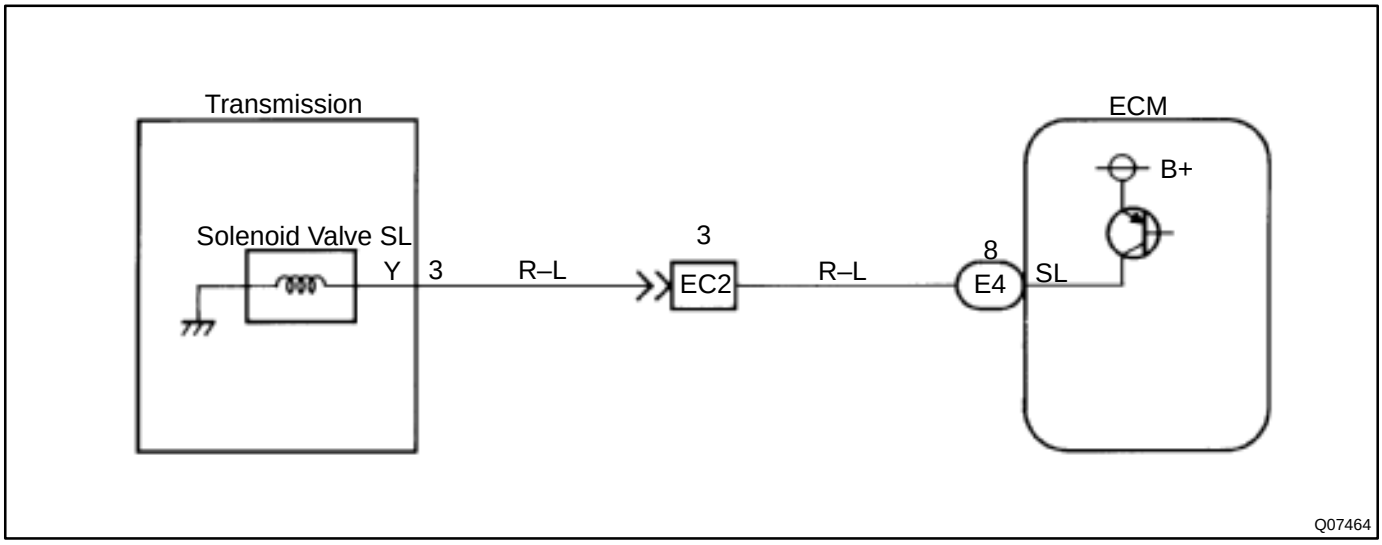

INSPECTION PROCEDURE

1	**Measure resistance between terminal SL of ECM and body ground.**

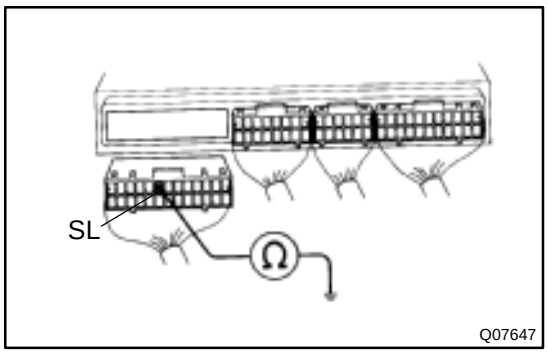

PREPARATION:
Disconnect the connector from ECM.
CHECK:
Measure the resistance between terminal SL of ECM and body ground.
OK:
Resistance: 11 – 15 Ω

OK → **Check and replace ECM.**

NG

2	**Check harness and connector between ECM and automatic transmission solenoid connector (See page IN–27).**

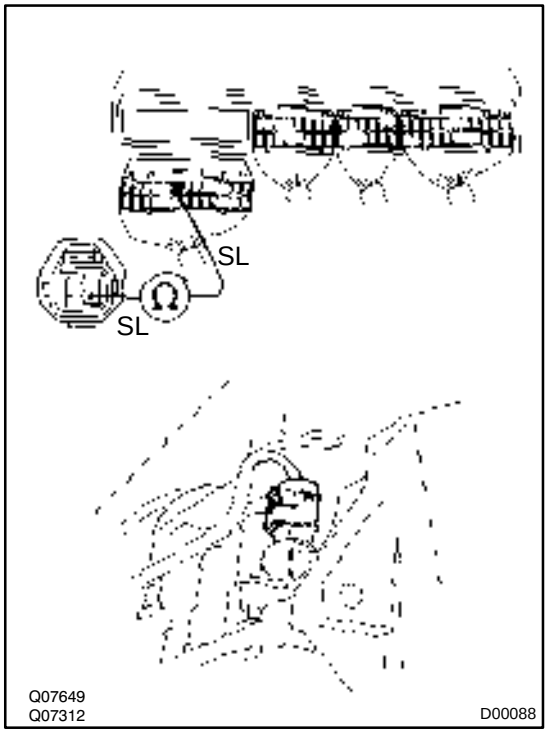

PREPARATION:
Disconnect the solenoid connector from the transmission.
CHECK:
Check the harness between terminal SL of ECM and terminal SL of transmission solenoid connector.
OK:
There is no open or short circuit.

NG → **Repair or replace the harness or connector.**

OK

3	**Check shift solenoid valve SL.**

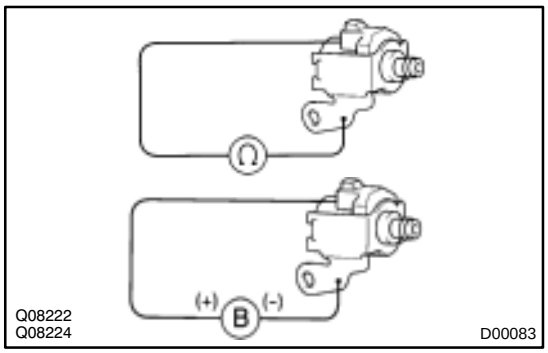

PREPARATION:

(a) Remove the oil pan.

(b) Remove the shift solenoid valve SL.

CHECK:

(a) Measure the resistance between terminal SL of shift solenoid valve and solenoid body.

(b) Connect the positive (+) lead to terminal of solenoid connector, negative (–) lead to solenoid body.

OK:

(a) Resistance: 11 – 15 Ω

(b) The shift solenoid valve SL makes operation noise.

NG → **Replace shift solenoid valve SL.**

OK

Repair or replace solenoid wire.

DTC	P1700	Speed Sensor No.2 Circuit Malfunction (No.2 Vehicle Speed Sensor)

CIRCUIT DESCRIPTION

The No.2 vehicle speed sensor detects the rotation speed of the transmission output shaft and sends signals to the ECM. The ECM determines the vehicle speed based on these signals.
An AC voltage is generated in the No.2 vehicle speed sensor coil as the rotor mounted on the output shaft rotates, and this voltage is sent to the ECM.
The gear shift point and lock–up timing are controlled by the ECM based on the signals from this vehicle speed sensor and the throttle position sensor signal.
If the No.2 vehicle speed sensor malfunctions, the ECM uses input signals from the No.1 vehicle speed sensor as a back–up signal.

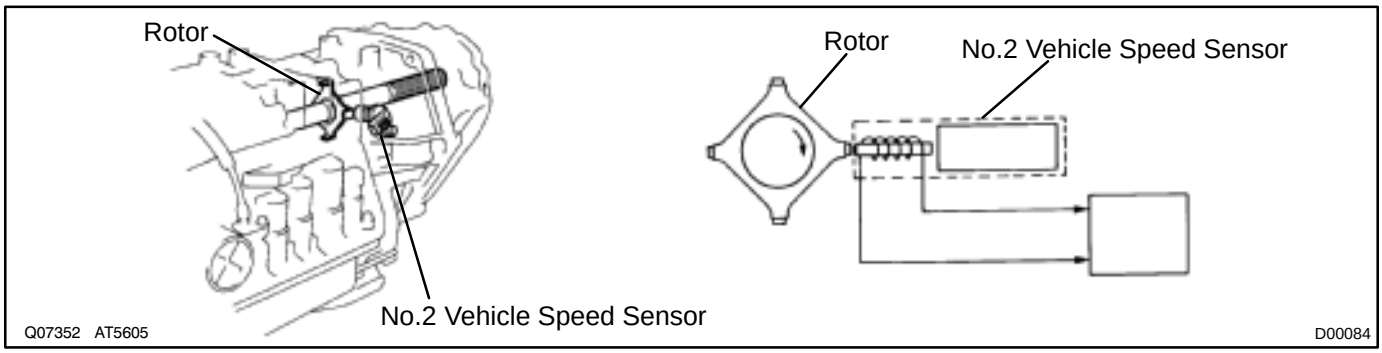

DTC No.	DTC Detection Condition	Trouble Area
P1700	All conditions below are detected 500 times or more continuously. (2 trip detection logic) (a) No signal from No.2 vehicle speed sensor is input to ECM while 4 pulses of No.1 vehicle speed sensor signal is sent. (a) Vehicle speed: 9 km/h (5.6 mph) or more for as least 4 seconds (b) Park/neutral position switch: OFF (Other than P or N) (c) Transfer position: Other than N position	• Open or short in No.2 vehicle speed sensor circuit • No.2 vehicle speed sensor • ECM

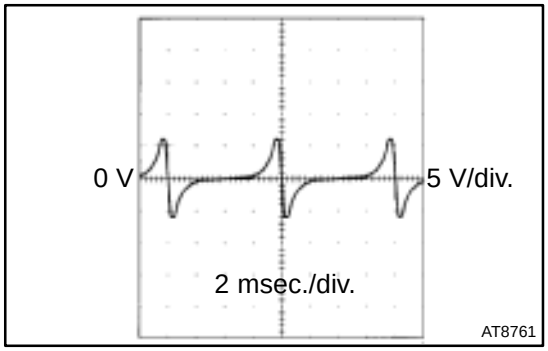

HINT:
Wave from between terminals $SP2^+$ and $SP2^-$ when vehicle speed is approx. 60 km/h (37 mph).

WIRING DIAGRAM

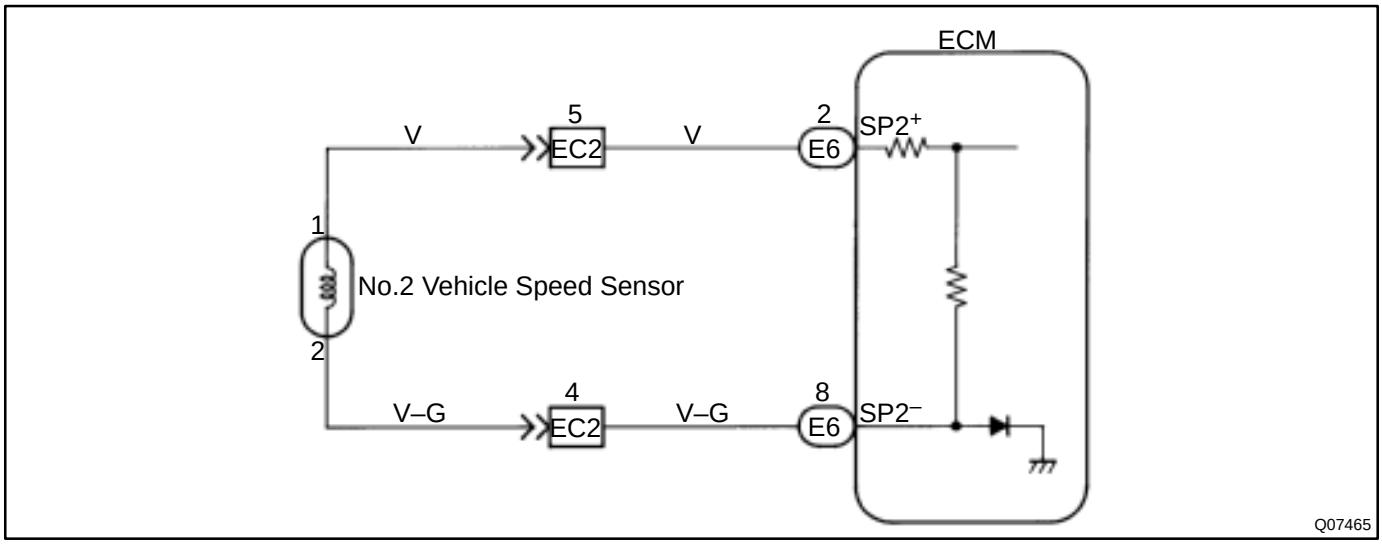

INSPECTION PROCEDURE

1	**Check vehicle speed value or resistance between terminals SP2+ and SP2– of ECM.**

When using OBD II scan tool or LEXUS hand–held tester:

PREPARATION:

(a) Remove the fuse box cover.

(b) Connect the OBD II scan tool or LEXUS hand–held tester to the DLC3.

(c) Start the engine and OBD II scan tool or LEXUS hand–held tester main switch ON.

CHECK:

Drive the vehicle and read vehicle speed value.

OK:

Vehicle speed matches tester speed value.

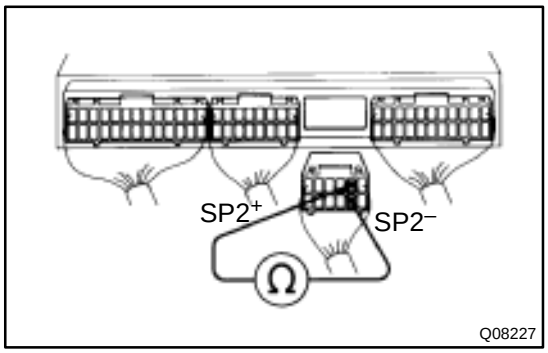

When not using OBD II scan tool or LEXUS hand–held tester:

PREPARATION:

Disconnect the connector from ECM.

CHECK:

Check the resistance between terminals SP2+ and SP2– of ECM.

OK:

Resistance: 560 – 680 Ω

OK → **Check and replace ECM.**

NG

2	Check No.2 vehicle speed sensor.

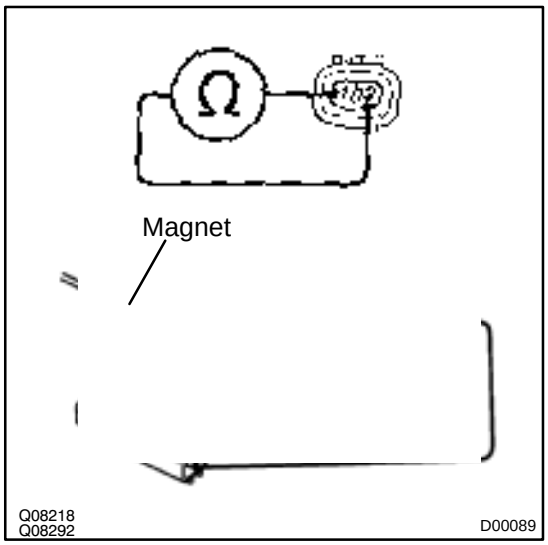

PREPARATION:

Remove the No.2 vehicle speed sensor from the transmission.

CHECK:

(a) Measure the resistance between terminals 1 and 2 of vehicle speed sensor.

(b) Check the voltage between terminals 1 and 2 of vehicle speed sensor when a magnet is put close to the front end of the vehicle speed sensor then taken away quickly.

OK:

(a) Resistance: 560 ~ 680 Ω

(b) Voltage is generated intermittently.

HINT:

The voltage generated is extremely low.

NG → **Replace No.2 vehicle speed sensor.**

OK

Check and repair harness and connector between ECM and No.2 vehicle speed sensor (See page IN–27).

DI5MU–02

DTC	P1780	Park/Neutral Position Switch Malfunction

CIRCUIT DESCRIPTION

The park/neutral position switch detects the shift lever position and sends signals to the ECM.
The ECM receives signals (NSW, R, 2 and L) from the park/neutral position switch. When the signal is not sent to the ECM from the park/neutral position switch, the ECM judges that the shift lever is in D position.

DTC No.	DTC Detection Condition	Trouble Area
P1780	2 or more switches are ON simultaneously for N, 2 and L positions. (2 trip detection logic)	• Short in park/neutral position switch circuit • Park/neutral position switch • ECM
	When driving under conditions (a) and (b) for 30 seconds or more, the park/neutral position switch is ON (N position). (2 trip detection logic) (d) Vehicle speed: 70 km/h (44 mph) or more (e) Engine speed: 1,500 ~ 2,500 rpm (f) Engine load: 0.6 g/rev. or more	

WIRING DIAGRAM

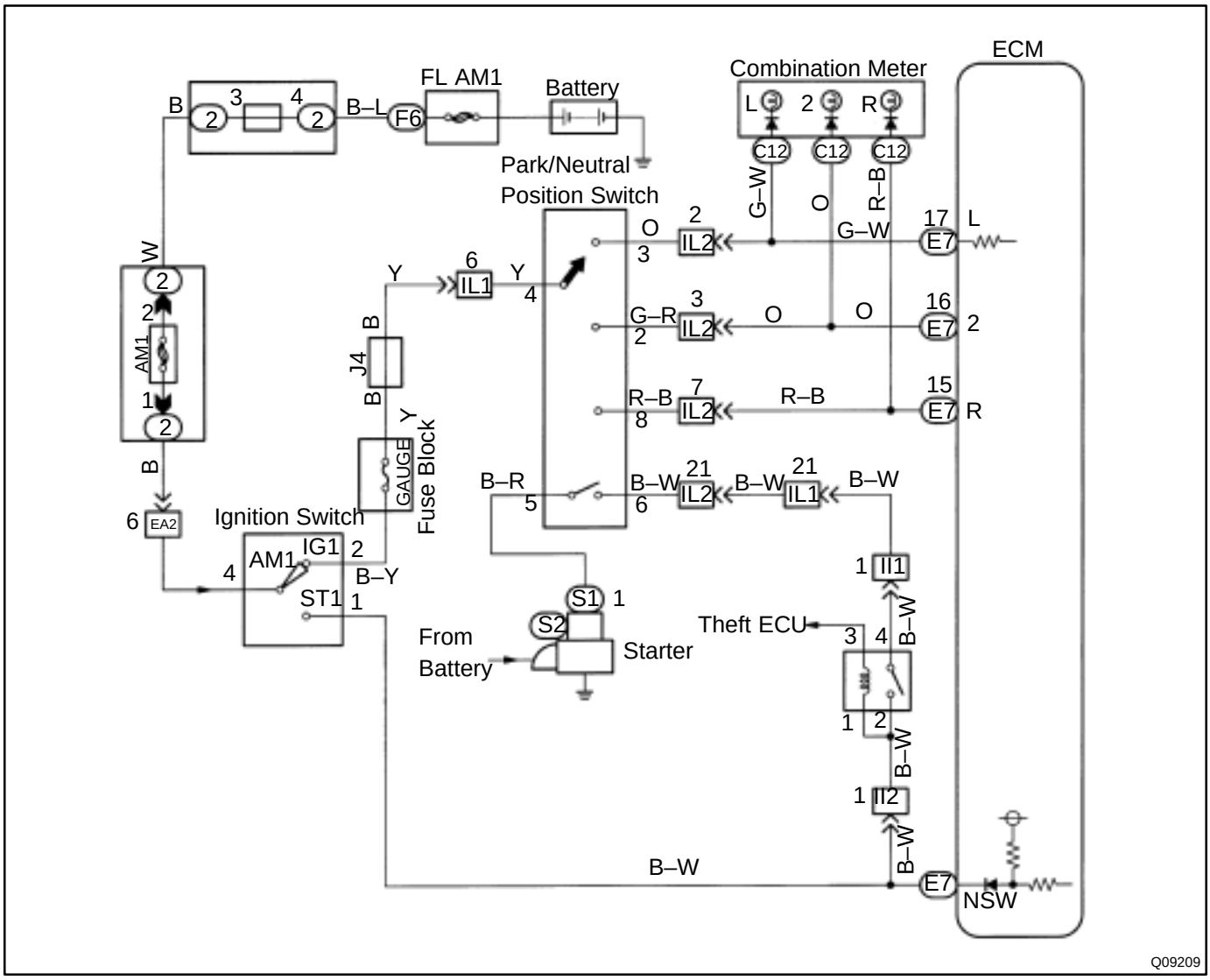

INSPECTION PROCEDURE

1	**Read PNP, REVERSE, 2ND and LOW signals.**

When using LEXUS hand–held tester:

PREPARATION:

(a) Remove the fuse box cover.
(b) Connect the LEXUS hand–held tester to the DLC3.
(c) Turn the ignition switch ON and LEXUS hand–held tester main switch ON.

CHECK:

Shift lever into the P, R, N, 2 and L positions, and read the PNP, REVERSE, 2ND and LOW signals on the LEXUS hand–held tester.

OK:

Shift position	Signal
2	2ND OFF → ON
L	LOW OFF → ON
R	REVERSE OFF → ON
P,N	PNP SW OFF → ON

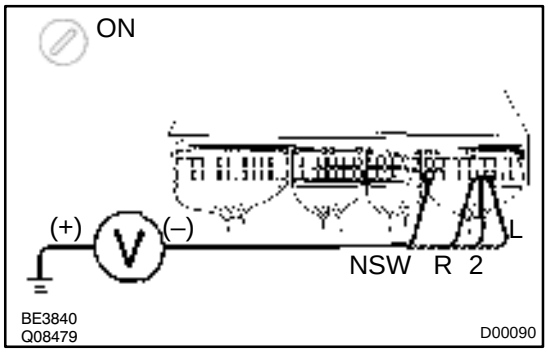

When not using LEXUS hand–held tester:

PREPARATION:

Turn the ignition switch ON.

CHECK:

Measure the voltage between terminals NSW, R, 2 and L of ECM and body ground when the shift lever is shifted to the following positions.

OK:

Position	NSW–Body ground	R–Body ground	2–Body ground	L–Body ground
P, N	0 V	0 V	0 V	0 V
R	9 – 14 V*	7.5 – 14 V*	0 V	0 V
D	9 – 14 V	0 V	0 V	0 V
2	9 – 14 V	0 V	7.5 – 14 V	0 V
L	9 – 14 V	0 V	0 V	7.5 – 14 V

HINT:

*: The voltage will drop slightly due to lighting up of the back up light.

OK	**Check and replace ECM.**

NG

2	**Check park/neutral position switch.**

PREPARATION:

Disconnect the park/neutral position switch connector.

CHECK:

Check the continuity between each terminal shown below when the shift lever is moved to each position.

OK:

Shift Position	Terminal No. to continuity	
P	4 – 7	5 – 6
R	4 – 8	–
N	4 – 10	5 – 6
D	4 – 9	–
2	2 – 4	–
L	2 – 3	–

NG → **Replace park/neutral position switch.**

OK

Repair or replace harness and connector between battery and park/neutral position switch, park/neutral position switch and ECM (See page IN–27).

DI5MV–02

O/D Cancel Signal Circuit

CIRCUIT DESCRIPTION

While driving uphill with cruise control activated, in order to minimize gear shifting and provide smooth cruising overdrive may be prohibited temporarily under some condition.
The cruise control ECU sends O/D cut signals to the ECM as necessary and the ECM cancels O/D shifting until these signals are discontinued.

WIRING DIAGRAM

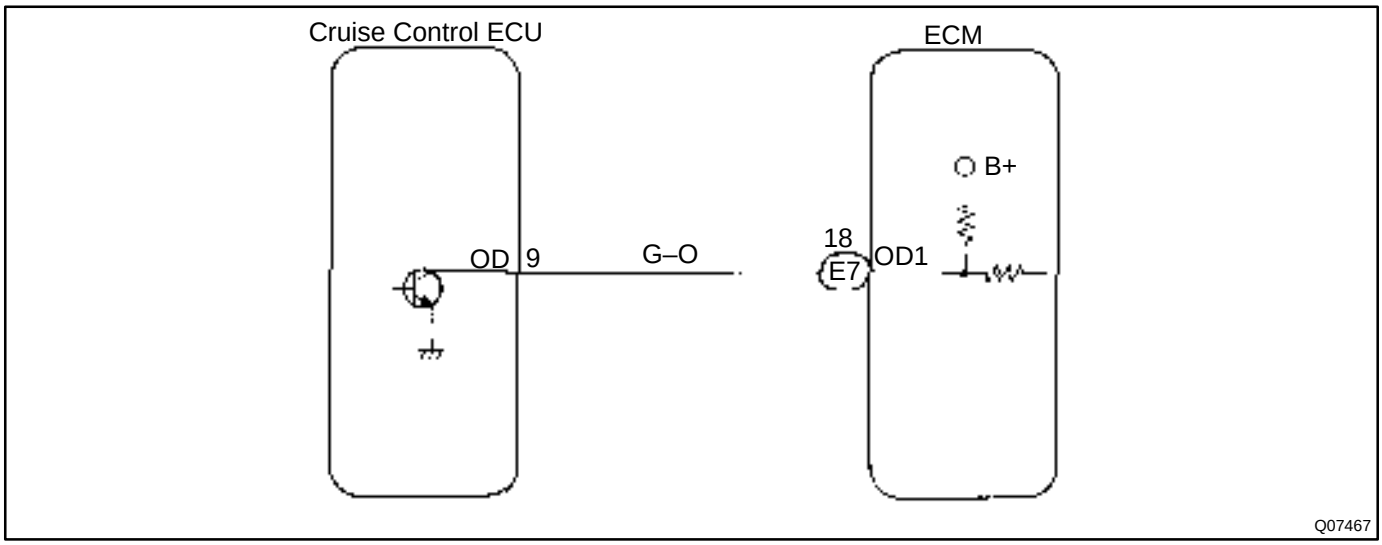

INSPECTION PROCEDURE

1	**Check voltage between terminal OD1 of ECM and body ground.**

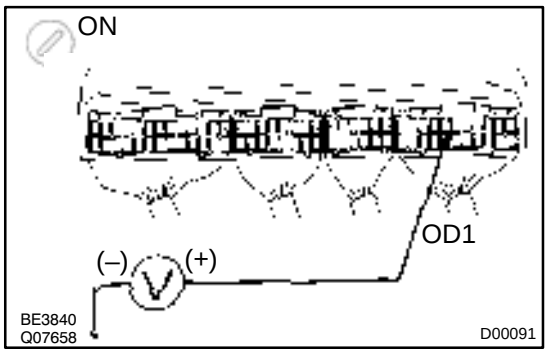

PREPARATION:
Turn the ignition switch ON.
CHECK:
Measure the voltage between terminal OD1 of ECM and body ground.
OK:
Voltage: 9 – 14 V

OK → **Proceed to next circuit inspection shown on matrix chart (See page DI–137).**

NG

2	**Check voltage between terminal OD of cruise control ECU harness side connector and body ground.**

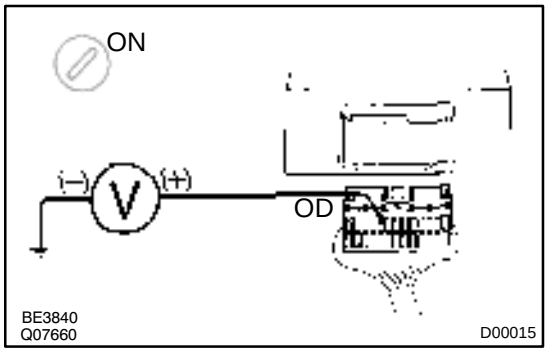

PREPARATION:

(a) Disconnect the cruise control ECU connector.

(b) Turn the ignition switch ON.

CHECK:

Measure the voltage between terminal OD of cruise control ECU harness side connector and body ground.

OK:

Voltage: 9 – 14 V

OK → **Check and replace cruise control ECU.**

NG

3	**Check harness and connector between cruise control ECU and ECM (See page IN–27).**

NG → **Repair or replace harness or connector.**

OK

Check and replace ECM.

DI5MW–02

O/D Main Switch & O/D OFF Indicator Light Circuit

CIRCUIT DESCRIPTION

The O/D main switch contacts go open when the switch is pushed in and go closed when it is pushed out. In O/D main switch at OFF position, the O/D OFF indicator light lights up, and the ECM prohibits shifting overdrive.

WIRING DIAGRAM

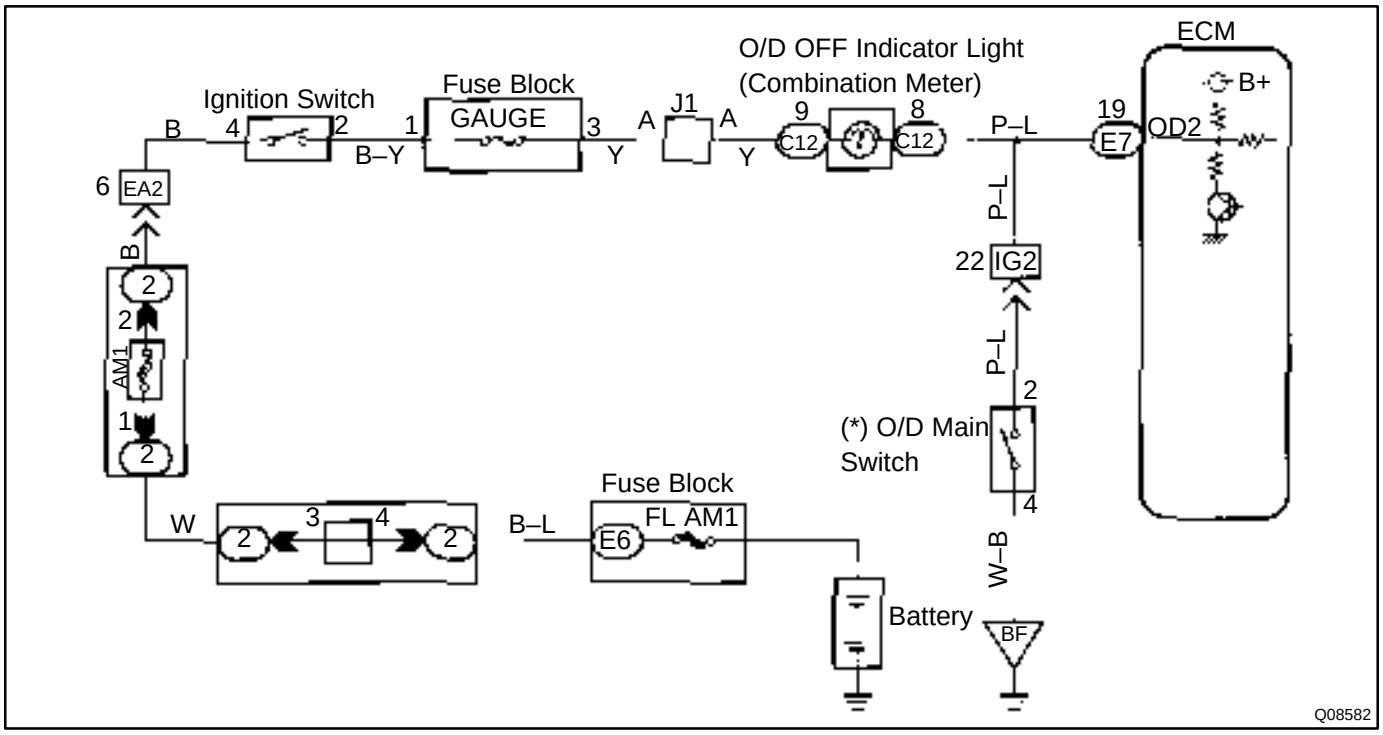

(*) O/D Main Switch
Contacts go off with switch pushed in.
Contacts go on with switch once again.

INSPECTION PROCEDURE
O/D OFF indicator light does not light up:

1	Check operation of O/D main switch.

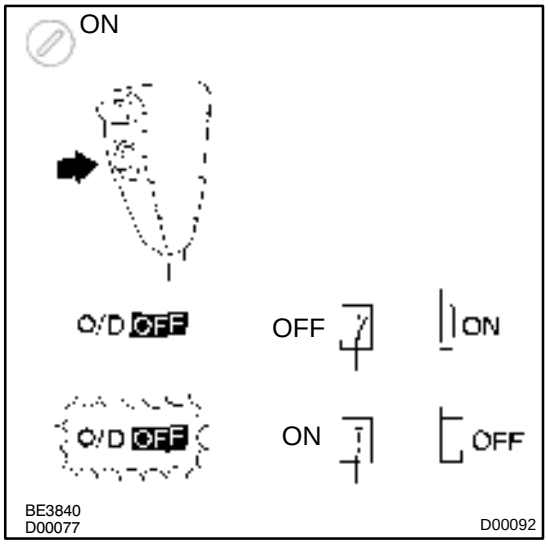

PREPARATION:
Turn the ignition switch ON.
CHECK:
(a) Check the O/D OFF indicator light when O/D main switch is pushed in to ON.
(b) Check the O/D OFF indicator light when O/D main switch is pushed again to OFF.
OK:
(a) O/D OFF indicator light goes off
(b) O/D OFF indicator light lights up

NG → **Go to step 4.**

OK

2	Check OVRDRIVE CUT SW2 signal.

When using LEXUS hand–held tester:
PREPARATION:
(a) Remove the fuse box cover.
(b) Connect the LEXUS hand–held tester to the DLC3.
(c) Turn the ignition switch ON and LEXUS hand–held tester main switch ON.
CHECK:
Read the OVRDRIVE CUT SW2 signal on the LEXUS hand–held tester.
OK:

O/D main switch condition	OVRDRIVE CUT SW2 signal
O/D ON (Pushed in)	OFF
O/D OFF (Pushed once again)	ON

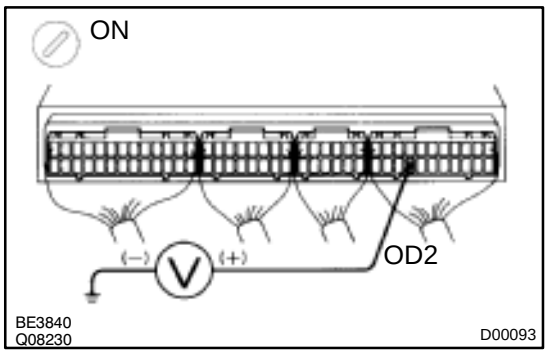

When not using LEXUS hand–held tester

PREPARATION:

Turn the ignition switch ON.

CHECK:

Check the voltage between terminal OD2 of ECM and body ground.

OK:

O/D main switch condition	Voltage
O/D ON (Pushed in)	9 ~ 14 V
O/D (Pushed once again)	Below 3 V

OK → **Proceed to next circuit inspection shown on matrix chart (See page DI–137).**

NG

3	**Check harness and connector between O/D OFF indicator light and ECM (See page IN–27).**

NG → **Repair or replace harness or connector.**

OK

Check O/D main switch.

4	Check O/D main switch.

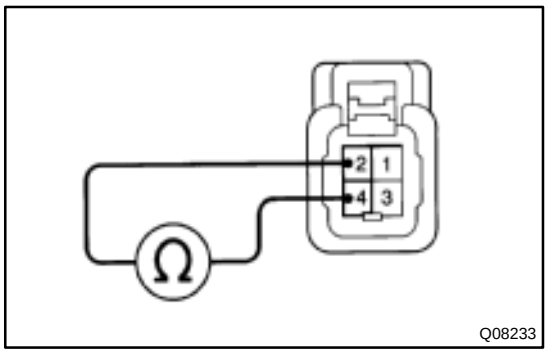

PREPARATION:
Disconnect the O/D main switch connector.
CHECK:
Check continuity between terminals 2 and 4 of O/D main switch connector.
OK:

O/D main switch	Specified condition
ON	No continuity
OFF	Continuity

NG → **Replace the O/D main switch.**

OK

Check and replace the combination meter (See page BE–49).

O/D OFF indicator light remains ON:

1	Check O/D main switch.

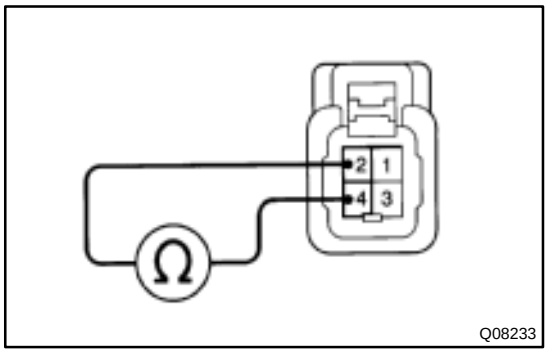

PREPARATION:
Disconnect the O/D main switch connector.
CHECK:
Check the continuity between terminals 2 and 4 of O/D main switch connector.
OK:

O/D main switch	Specified condition
ON	No continuity
OFF	Continuity

NG → **Replace the O/D main switch.**

OK

2	**Check harness and connector between O/D OFF indicator light and O/D main switch, O/D OFF indicator light and ECM (See page IN–27).**

NG → **Repair or replace the harness or connector.**

OK

Check and replace ECM.

DI5MX–02

Pattern Select Switch Circuit (PWR Mode Switch)

CIRCUIT DESCRIPTION

The ECM memory contains the shift programs for the NORMAL and POWER patterns, 2 position, L position and the lock–up patterns. Following the programs corresponding to the signals from the pattern select switch, the park/neutral position and other various sensors, the ECM switches the solenoid valves ON and OFF, and controls the transmission gear change and the lock–up clutch operation.

WIRING DIAGRAM

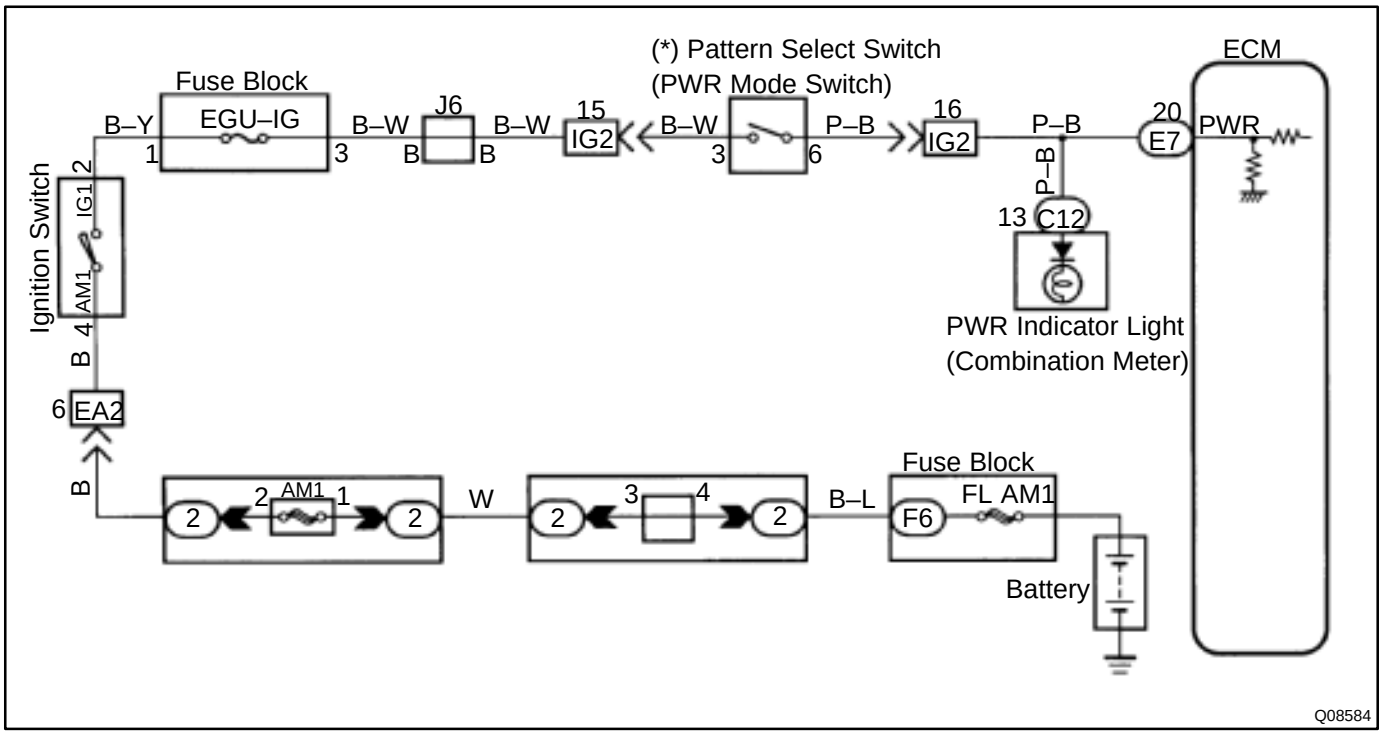

(*) Pattern Select Switch (PWR Mode Switch)
When the PWR mode switch is pushed in, the switch is contacted and the PWR mode is selected.
To cancel the PWR mode, push the PWR mode switch once again.

INSPECTION PROCEDURE

1	Check PATTERN SEL SW signal.

When using LEXUS hand–held tester:

PREPARATION:

(a) Remove the fuse box cover.

(b) Connect the LEXUS hand–held tester to the DLC3.

(c) Turn the ignition switch ON and LEXUS hand–held tester main switch ON.

CHECK:

Read the PATTERN SEL SW signal on the LEXUS hand–held tester.

OK:

Pattern select switch	PATTERN SEL SW signal
PWR	ON
NORM	OFF

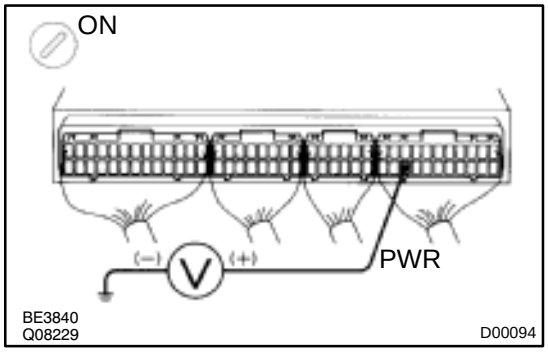

When not using LEXUS hand–held tester:

PREPARATION:

Turn the ignition switch ON.

CHECK:

Measure the voltage between terminal PWR of ECM and body ground when the pattern select switch set to the PWR (POWER) position and NORM (NORMAL) position.

OK:

Pattern select switch	Voltage
PWR	10 – 14 V
NORM	Below 1.0 V

HINT:

The ECM uses the normal pattern signal if the PWR signal is not input.

OK → **Proceed to next circuit inspection shown on matrix chart (See page DI–137).**

NG

2	**Check pattern select switch.**

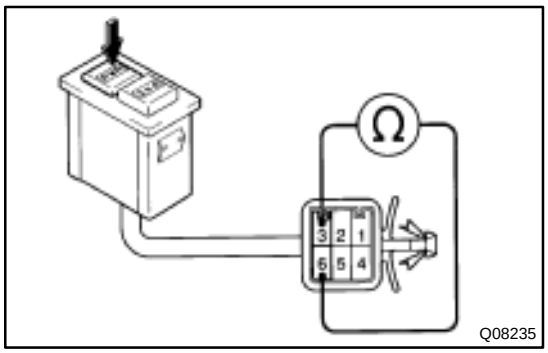

PREPARATION:

Disconnect the pattern select switch connector.

CHECK:

Check the continuity between terminals 3 and 6 of pattern select switch connector when the select switch is set to PWR and NORM positions.

OK:

Pattern select switch	Specified condition
PWR	Continuity
NORM	No continuity

NG → **Replace pattern select switch.**

OK

3	**Check harness and connector between battery and pattern select switch, pattern select switch and ECM (See page IN–27).**

NG → **Repair or replace harness or connector.**

OK

Check and replace ECM.

DI5MY–02

Pattern Select Switch Circuit (2nd Start Switch) & 2nd Start Switch Indicator Light Circuit

CIRCUIT DESCRIPTION

When 2nd start mode is selected with the pattern select switch, the ECM controls the solenoid valves and the transmission starts from 2nd gear.
In D position, the transmission automatically shifts up through 3rd to O/D as usual.
In 2nd position, the transmission is held in 2nd gear.

WIRING DIAGRAM

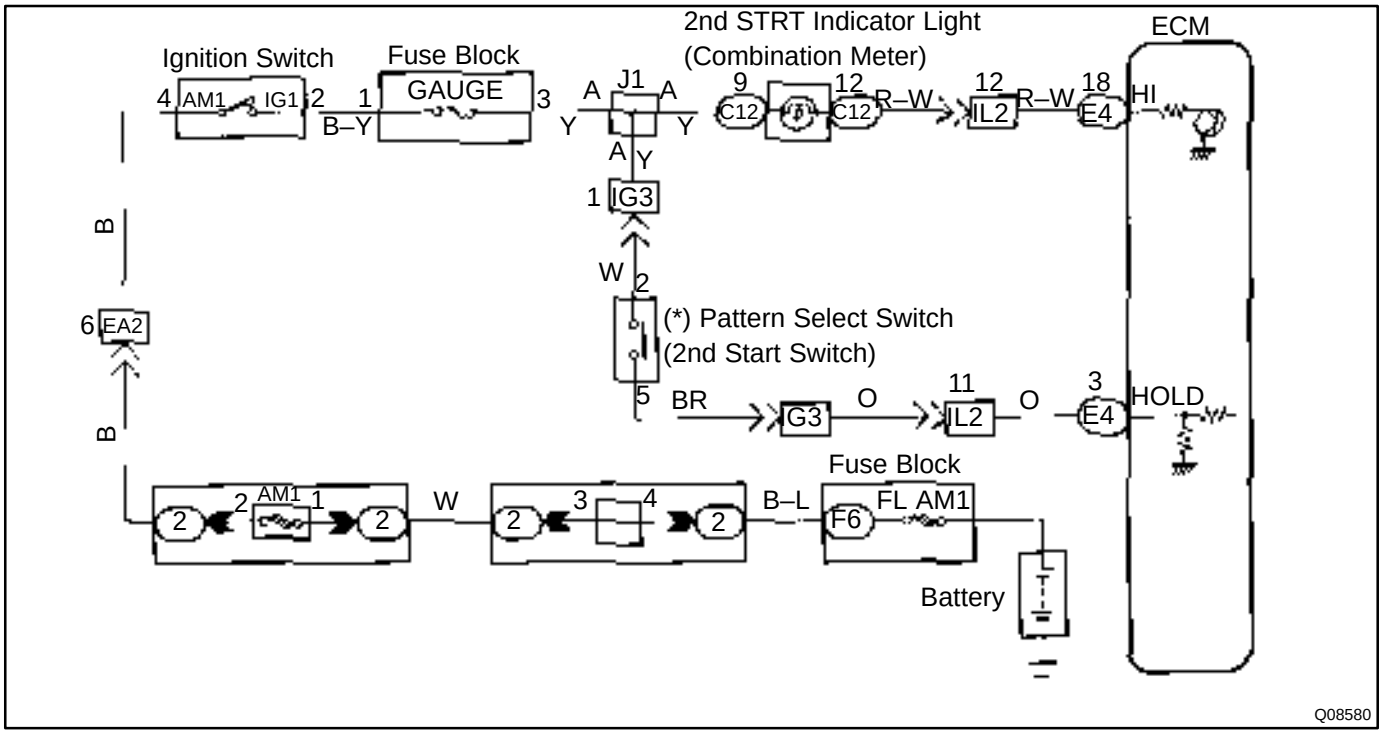

(*) Pattern Select Switch (2nd Start Switch)
When the 2nd start switch is pushed, the switch is contacted and the 2nd mode is selected.
To cancel the 2nd start, push the 2nd start switch once again. The 2nd start is automatically cancelled out when the ignition switch is turned OFF.

INSPECTION PROCEDURE

1	Check operation of 2nd start switch.

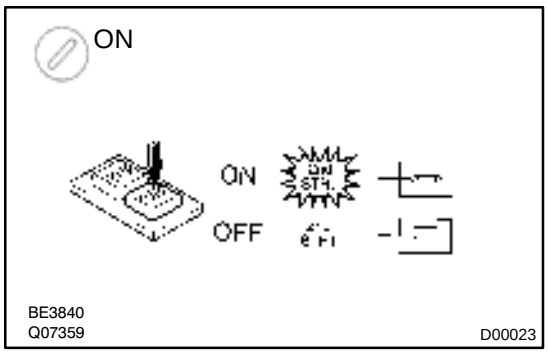

PREPARATION:

Turn the ignition switch ON.

CHECK:

(a) Check ”2nd STRT” indicator light when 2nd start switch is pushed in to ON.

(b) Check the ”2nd STRT” indicator light when 2nd start switch is pushed again, or PWR mode switch is pushed into OFF.

OK:

(a)”2nd STRT” indicator light goes off.

(b)”2nd STRT” indicator light goes off. When PWR mode switch is pushed in to ON, ”2nd STRT” indicator light goes off, and ”PWR” indicator light lights up.

OK → **Proceed to next circuit inspection shown on matrix chart (See page DI–137).**

NG

2	Check 2nd start indicator bulb.

NG → **Replace 2nd start indicator bulb.**

OK

3	Check 2nd start switch.

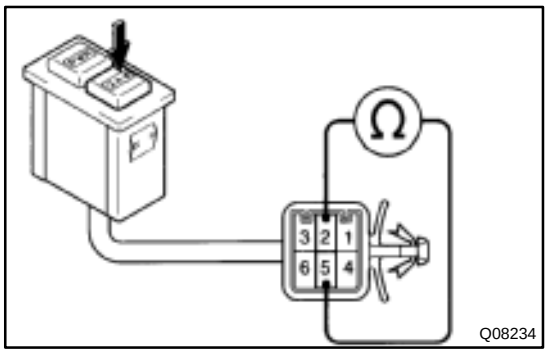

PREPARATION:
Disconnect the pattern select switch connector.
CHECK:
Check the continuity between terminals 2 and 5 of pattern select switch connector when pattern select switch is set to 2nd start switch ON and OFF.
OK:

2nd start switch	Specified condition
Press continuously "2nd" switch	Continuity
Release "2nd" switch	No continuity

NG → **Replace 2nd start indicator bulb.**

OK

4	Check voltage between terminal HOLD and HI of ECM and body ground.

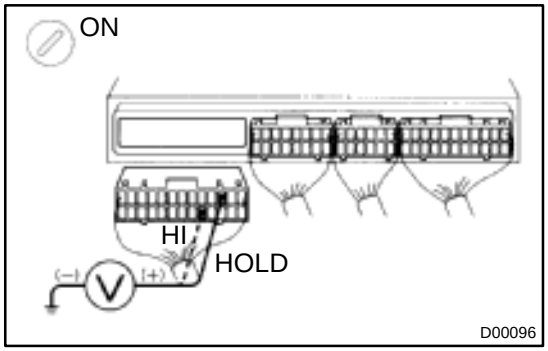

PREPARATION:
(a) Turn the ignition switch ON.
(b) Disconnect the connector of ECM.
CHECK:
Check the voltage between terminal HOLD of ECM and body ground when the select switch is set to 2nd start switch ON and OFF.
OK:

2nd start switch	Voltage
ON	9 – 14 V
OFF	Below 1.5 V

CHECK:
Check the voltage between terminal HI of ECM and body ground.
OK:
Voltage: 7.5 – 14 V

OK → **Check and replace ECM.**

NG

Check and replace harness and connector between battery and patten select switch, pattern select switch and ECM, battery and 2nd start indicator light , 2nd start indicator light and ECM (See page IN–27).

DI7JW–01

Stop Light Switch Circuit

CIRCUIT DESCRIPTION

This signal is used to detect when the brakes have been applied. The STP signal voltage is the same as the voltage supplied to the stop lights.
The STP signal is used mainly to control the fuel cut–off engine speed (The fuel cut–off engine speed is reduced slightly when the vehicle is braking.).

WIRING DIAGRAM

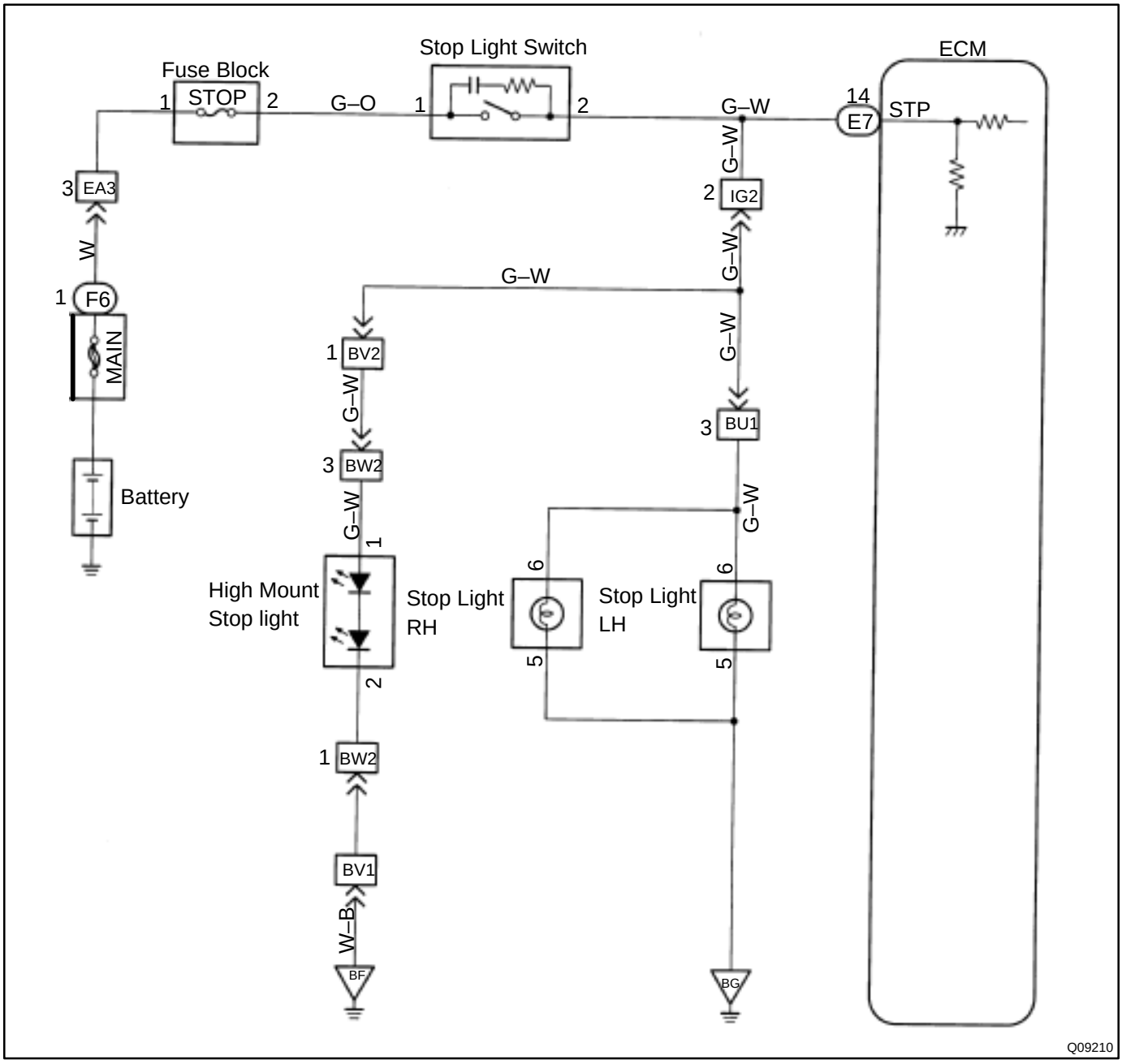

INSPECTION PROCEDURE

1	**Check operation of stop light.**

CHECK:
Check if the stop lights go on and off normally when the brake pedal is operated and released.

NG	**Check and repair stop light circuit.**

OK

2	**Check STP signal.**

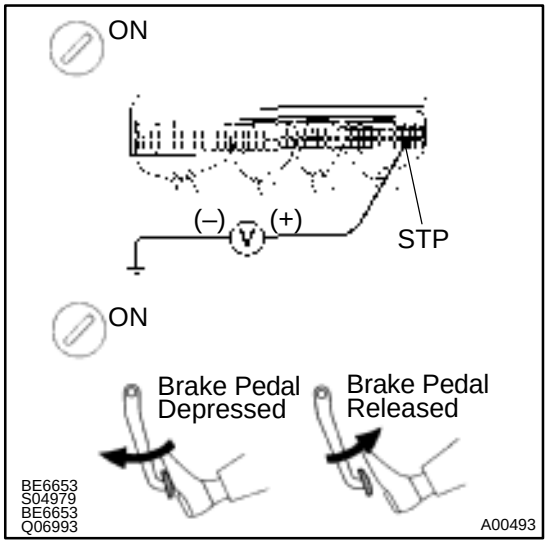

When using LEXUS hand–held tester:

PREPARATION:

(a) Remove the fuse cover on the instrument panel.
(b) Connect the LEXUS hand–held tester to the DLC3.
(c) Turn the ignition switch ON and LEXUS hand–held tester main switch ON.

CHECK:
Read the STP signal on the LEXUS hand–held tester.

OK:

Brake pedal is depressed: STP .... ON
Brake pedal is released: STP .... OFF

When not using LEXUS hand–held tester:

PREPARATION:
Turn the ignition switch ON.

CHECK:
Check the voltage between terminal STP of ECM and body ground.

OK:

Brake pedal	Voltage
Depressed	7.5 – 14 V
Released	Below 1.5 V

OK	**Check for intermittent problems (See page DI–137).**

NG

3	**Check harness and connector between ECM and stop light switch (See page IN–27).**

NG → **Repair or replace harness or connector.**

OK ↓

Check and replace ECM (See page IN–27).

ANTI–LOCK BRAKE SYSTEM

DI13F–01

HOW TO PROCEED WITH TROUBLESHOOTING

Troubleshoooting in accordance with the procedure on the following pages.

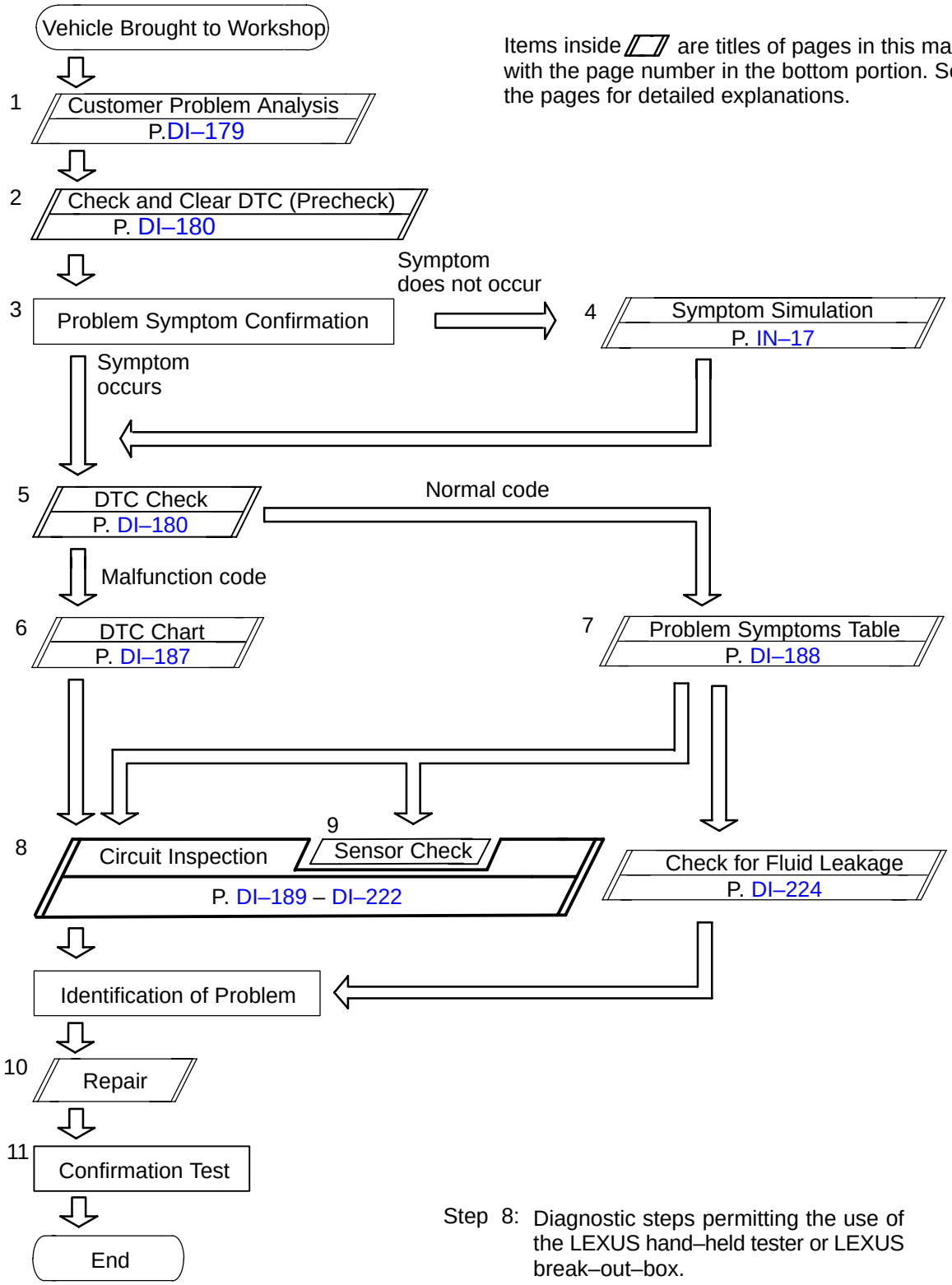

Step 8: Diagnostic steps permitting the use of the LEXUS hand–held tester or LEXUS break–out–box.

DI13G–01

CUSTOMER PROBLEM ANALYSIS CHECK

ABS Check Sheet

Inspector's Name :

Customer's Name		**Registration No.**	
		Registration Year	/ /
		Frame No.	
Date Vehicle Brought In	/ /	**Odometer Reading**	km miles

Date Problem First Occurred	/ /
Frequency Problem Occurs	☐ Continuous ☐ Intermittent (times a day)

Symptoms	☐ ABS does not operate.	
	☐ ABS does not operate efficiently.	
	ABS Warning Light Abnormal	☐ Remains ON ☐ Does not Light Up

DTC Check	**1st Time**	☐ Normal Code ☐ Malfunction Code (Code)
	2nd Time	☐ Normal Code ☐ Malfunction Code (Code)

DI13H–03

PRE–CHECK

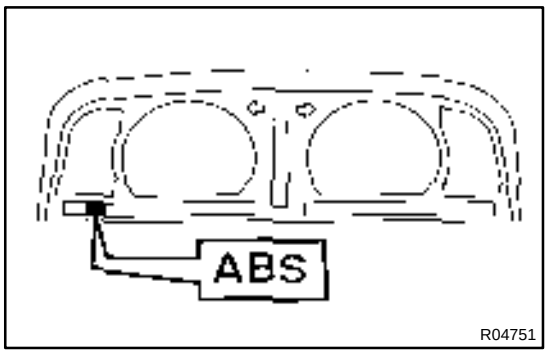

1. DIAGNOSIS SYSTEM

(a) Check the indicator.
When the ignition switch is turned ON, check that the ABS warning light goes on for 3 seconds.

HINT:
If the indicator check result is not normal, proceed to trouble-shooting for the ABS warning light circuit (See page DI–217).

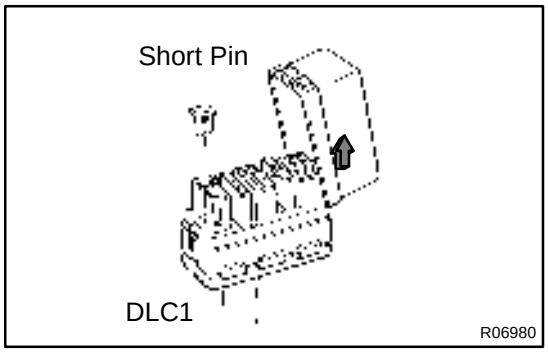

(b) Check the DTC.
(1) Confirm that the center differential is free.
(2) Disconnect the short pin from DLC1.

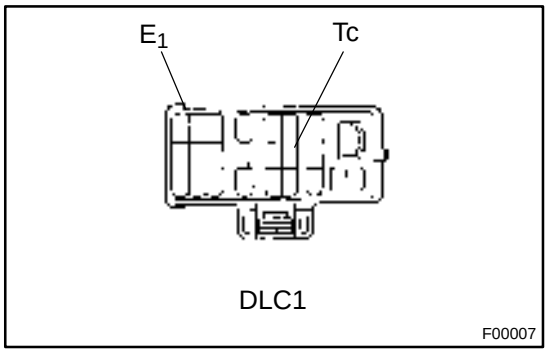

(3) Using SST, connect terminals Tc and E_1 of DLC1.
SST 09843–18020
(4) Turn the ignition switch ON.
(5) Read the DTC from the ABS warning light on the combination meter.

HINT:
- If no code appears, inspect the diagnostic circuit or ABS warning light circuit (See page DI–220 or DI–217).

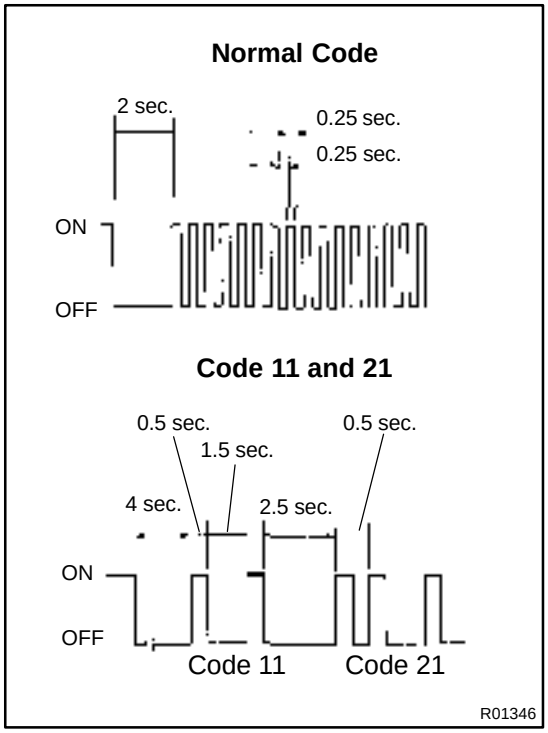

- As an example, the blinking patterns for normal code and codes 11 and 21 are shown on the left.
(6) Code are explained in the code table on page DI–187.
(7) After completing the check, disconnect terminals Tc and E_1, and turn off the display.

If 2 or more malfunctions are indicated at the same time the low-est numbered DTC will be displayed 1st.

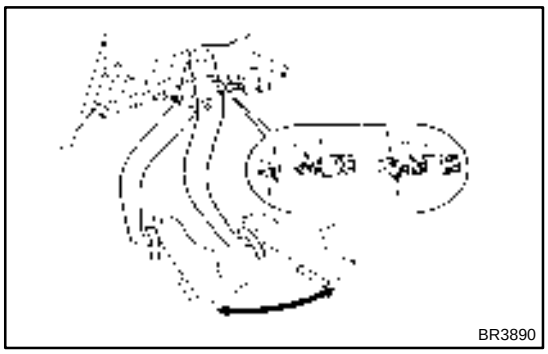

(c) Clear the DTC.
  (1) Confirm that the center differential is free.
  (2) Using SST, connect terminals Tc and E_1 of DLC1 and remove the short pin from DLC1.
  SST 09843–18020
  (3) Turn the ignition switch ON.
  (4) Clear the DTC stored in ECU by depressing the brake pedal 8 or more times within 3 seconds.
  (5) Check that the warning light shows the normal code.
  (6) Remove the SST from the terminals of DLC1.
  SST 09843–18020
  (7) Connect the short pin to DLC1.

HINT:
Cancellation can also be done by removing the ECU–B fuse, but in this case, other memory systems will also be cancelled out.

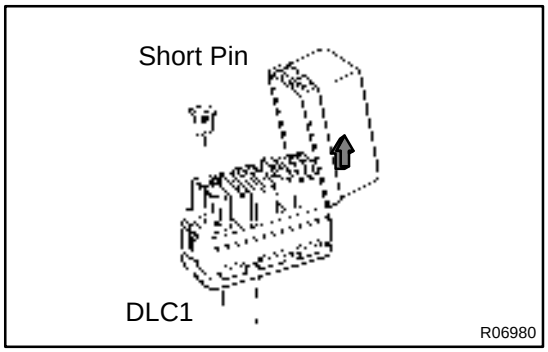

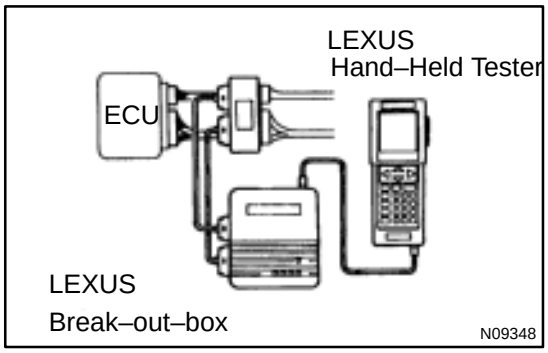

(d) Using LEXUS break–out–box and LEXUS hand–held tester, measure the ECU terminal values.
  (1) Hook up the LEXUS hand–held tester and LEXUS break–out–box to the vehicle.
  (2) Read the ECU input/output values by following the prompts on the tester screen.

HINT:
LEXUS hand–held tester has a ”Snapshot” function. This records the measured values and is effective in the diagnosis of intermittent problems.
Please refer to the LEXUS hand–held tester/LEXUS break–out–box operator’s manual for further details.

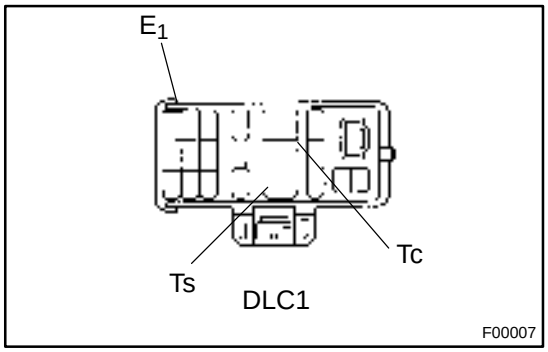

2. SPEED SENSOR SIGNAL AND DECELERATION SENSOR CHECK

(a) Check the speed sensor signal.
  (1) Comfirm that the center differential is free.
  (2) Turn the ignition switch OFF.
  (3) Using SST, connect terminals Ts and E_1 of DLC1.
  SST 09843–18020
  (4) Start the engine.

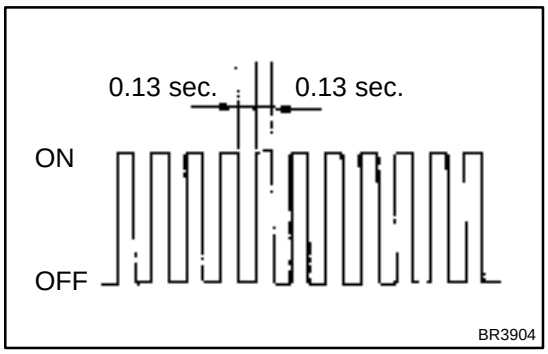

(5) Check that the ABS warning light blinks.

HINT:

If the ABS warning light does not blink, inspect the ABS warning light circuit (See page DI–217).

(6) Drive vehicle straight forward.

HINT:

Drive vehicle faster than 45 km/h (28 mph) for several seconds.

(7) Stop the vehicle.

(8) Using SST, connect terminals Tc and E_1 of DLC1.

SST 09843–18020

(9) Read the number of blinks of the ABS warning light.

HINT:

- See the list of DTC on page DI–180.
- If every sensor is normal, a normal code is output (A cycle of 0.25 sec. ON and 0.25 sec. OFF is repeated).
- If 2 or more malfunction are indicated at the same time, the lowest numbered code will be displayed 1st.

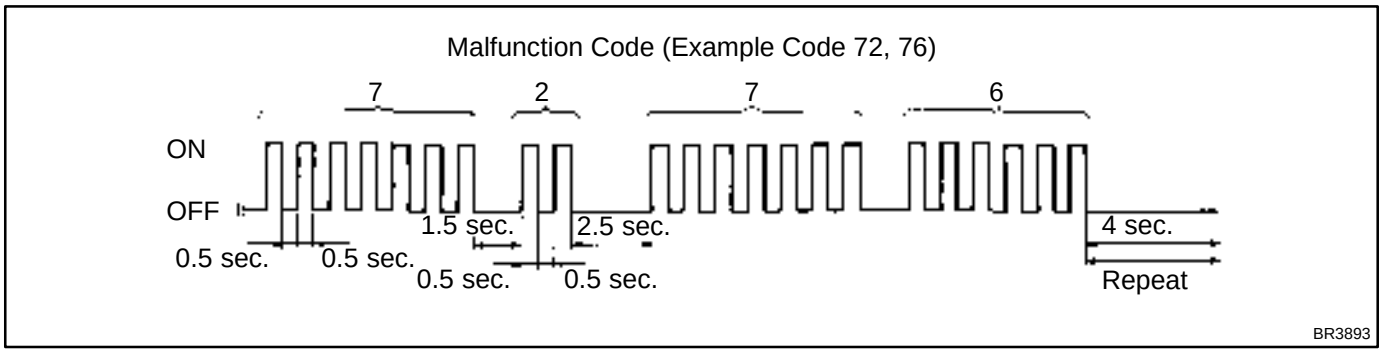

(10) After doing the check, disconnect terminals Ts and E_1, Tc and E_1 of DLC1, and ignition switch turned OFF.

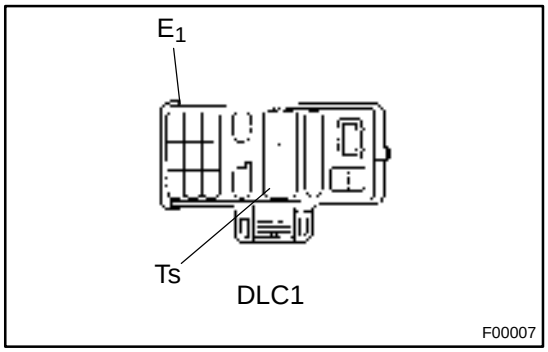

(b) Check the deceleration sensor detection point.

(1) Confirm that the center differential is free.

(2) Turn the ignition switch OFF.

(3) Using SST, connect terminals Ts and E_1 of DLC1.

SST 09843–18020

(4) Start the engine.

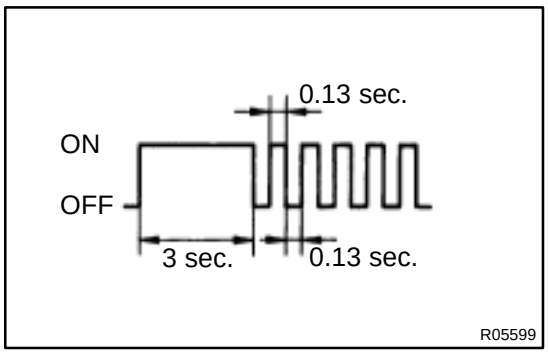

(5) Check that the ABS warning light blinks.

HINT:

If the ABS warning light does not blink, inspect the ABS warning light circuit (See page DI–217).

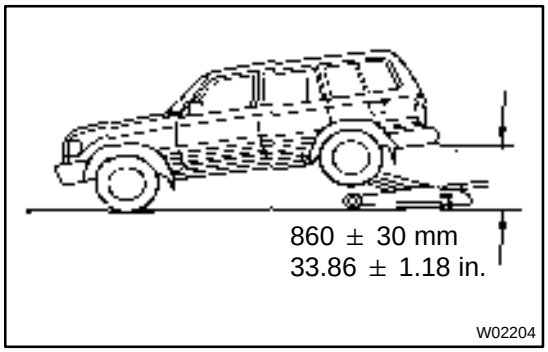

(6) Jack up the rear side of the vehicle slowly.

HINT:

When measuring the height, measure at the center of the lower body of the vehicle.

(7) Check that the warning light blinks.

If the warning light turns on, inspect the deceleration sensor installation. If the sensor installation is OK, replace the deceleration sensor.

(8) Jack down the vehicle slowly.

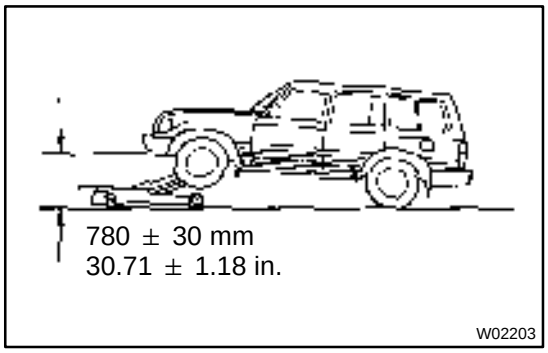

(9) Jack up the front side of the vehicle slowly, as shown.

HINT:

When measuring the height, measure at the center of the lower body of the vehicle.

(10) Check that the warning light blinks.

If the warning light turns on, inspect the deceleration sensor installation. If the sensor installation is OK, replace the deceleration sensor.

(11) Jack down the vehicle slowly.

(c) Check the deceleration sensor operation

(1) Drive the vehicle straight ahead at about 20 km/h (12.4 mph) or more, lightly depress the brake pedal.

(2) Check that there is no change in the warning light pattern.

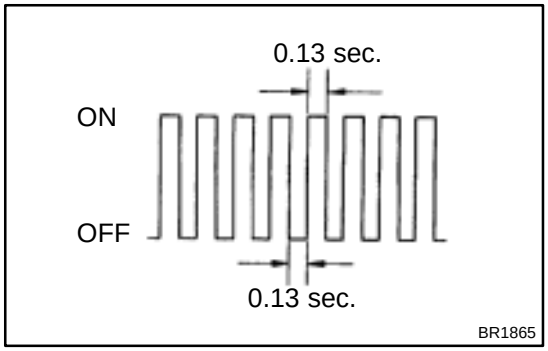

(3) Drive the vehicle straight ahead at about 20 km/h (12.4 mph) or more, and depress the brake pedal moderately.

(4) Check that the warning light turns on while braking.

(5) Drive the vehicle straight ahead at about 20 km/h (12.4 mph) or more, and depress the brake pedal strongly.

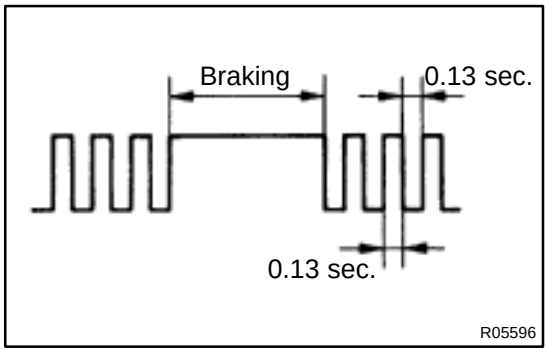

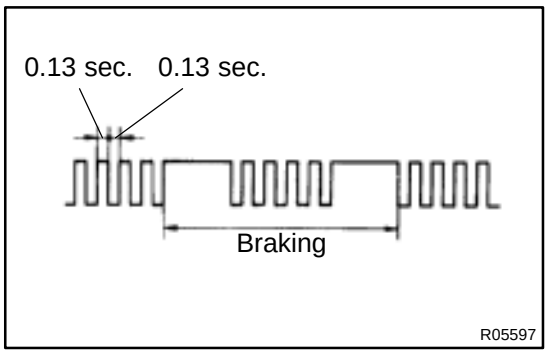

(6) Check that the warning light pattern changes while braking, as shown.

If the operation is not as specified, inspect the deceleration sensor installation. If the sensor installation is OK, replace the deceleration sensor.

(7) Stop the vehicle and turn the ignition switch OFF.

(8) Remove SST from the terminals Ts and E_1 of the DLC1.

SST 09843–18020

DTC of speed sensor check function

Code No.	Diagnosis	Trouble Area
71	Low output voltage of right front speed sensor	• Right front speed sensor • Sensor installation • Sensor rotor • Sensor wire harness
72	Low output voltage of left front speed sensor	• Left front speed sensor • Sensor installation • Sensor rotor • Sensor wire harness
73	Low output voltage of right rear speed sensor	• Right rear speed sensor • Sensor installation • Sensor rotor • Sensor wire harness
74	Low output voltage of left rear speed sensor	• Left rear speed sensor • Sensor installation • Sensor rotor • Sensor wire harness
75	Abnormal change in output voltage of right front speed sensor	• Right front speed sensor rotor • Sensor wire harness
76	Abnormal change in output voltage of left front speed sensor	• Left front speed sensor rotor • Sensor wire harness
77	Abnormal change in output voltage of right rear speed sensor	• Right rear speed sensor rotor • Sensor wire harness
78	Abnormal change in output voltage of left rear speed sensor	• Left rear speed sensor rotor • Sensor wire harness
79	Deceleration sensor is faulty	• Deceleration sensor • Sensor installation

DI13I–03

DIAGNOSTIC TROUBLE CODE CHART

NOTICE:
When removing the part, turn the IG switch OFF.
HINT:
- Using SST 09843–18020, connect the terminals Tc and E_1, and remove the short pin.
- If any abnormality is not found when inspection parts, inspect the ECU.

If a malfunction code is displayed during the DTC check, check the circuit listed that the code. For details of each code, turn to the page referred to under the ”See page” for respective ”DTC No.” in the DTC chart.

DTC No. (See Page)	DeteDetection Item	Trouble Area
11 (DI–189)	Open circuit in ABS control (solenoid) relay circuit	• ABS control (solenoid) relay • Open or short in ABS control (solenoid) relay circuit
12 (DI–189)	Short circuit in ABS control (solenoid) relay circuit	• ABS control (solenoid) relay • B+ short in ABS control (solenoid) relay circuit
13 (DI–192)	Open circuit in ABS control (motor) relay circuit	• ABS control (motor) relay • Open or short in ABS control (motor) relay circuit
14 (DI–192)	Short circuit in ABS control (motor) relay circuit	• ABS control (motor) relay • B+ short in ABS control (motor) relay circuit
21 (DI–195)	Open or short circuit in 3–position solenoid circuit for right front wheel	• ABS actuator • Open or short in SFR circuit
22 (DI–195)	Open or short circuit in 3–position solenoid circuit for left front wheel	• ABS actuator • Open or short in SFLcircuit
23 (DI–195)	Open or short circuit in 3–position solenoid circuit for rear wheel	• ABS actuator • Open or short in SRR circuit
31 (DI–198)	Right front wheel speed sensor signal malfunction	• Right front, left front, right rear and left rear speed sensor • Open or short in each speed sensor circuit • Senser rotor
32 (DI–198)	Left front wheel speed sensor signal malfunction	
33 (DI–198)	Right rear wheel speed sensor signal malfunction	
34 (DI–198)	Left rear wheel speed sensor signal malfunction	
35 (DI–198)	Open circuit in left front or right rear speed sensor circuit	• Open in left front or right rear speed sensor circuit
36 (DI–198)	Open circuit in right front or left rear speed sensor circuit	• Open in right front or left rear speed sensor circuit
41 (DI–202)	Low battery positive voltage or abnormally high battery positive voltage	• Battery • IC regulator • Open or short in power source circuit
43 (DI–205)	Malfunction in deceleration sensor	• Deceleration sensor • Wire harness for deceleration sensor circuit
44 (DI–206)	Open or short in deceleration sensor circuit	• Deceleration sensor • Open or short in deceleration sensor circuit
48 (DI–208)	Open or short circuit in center differential lock circuit Center differential is locking	• Center differential lock • Center differential lock circuit
51 (DI–211)	Pump motor is locked Open in pump motor ground	• ABS pump motor
Always ON (DI–212)	Malfunction in ECU IG power source circuit	• Battery • IC regulator • Open or short in power source circuit

DI13J–01

PARTS LOCATION

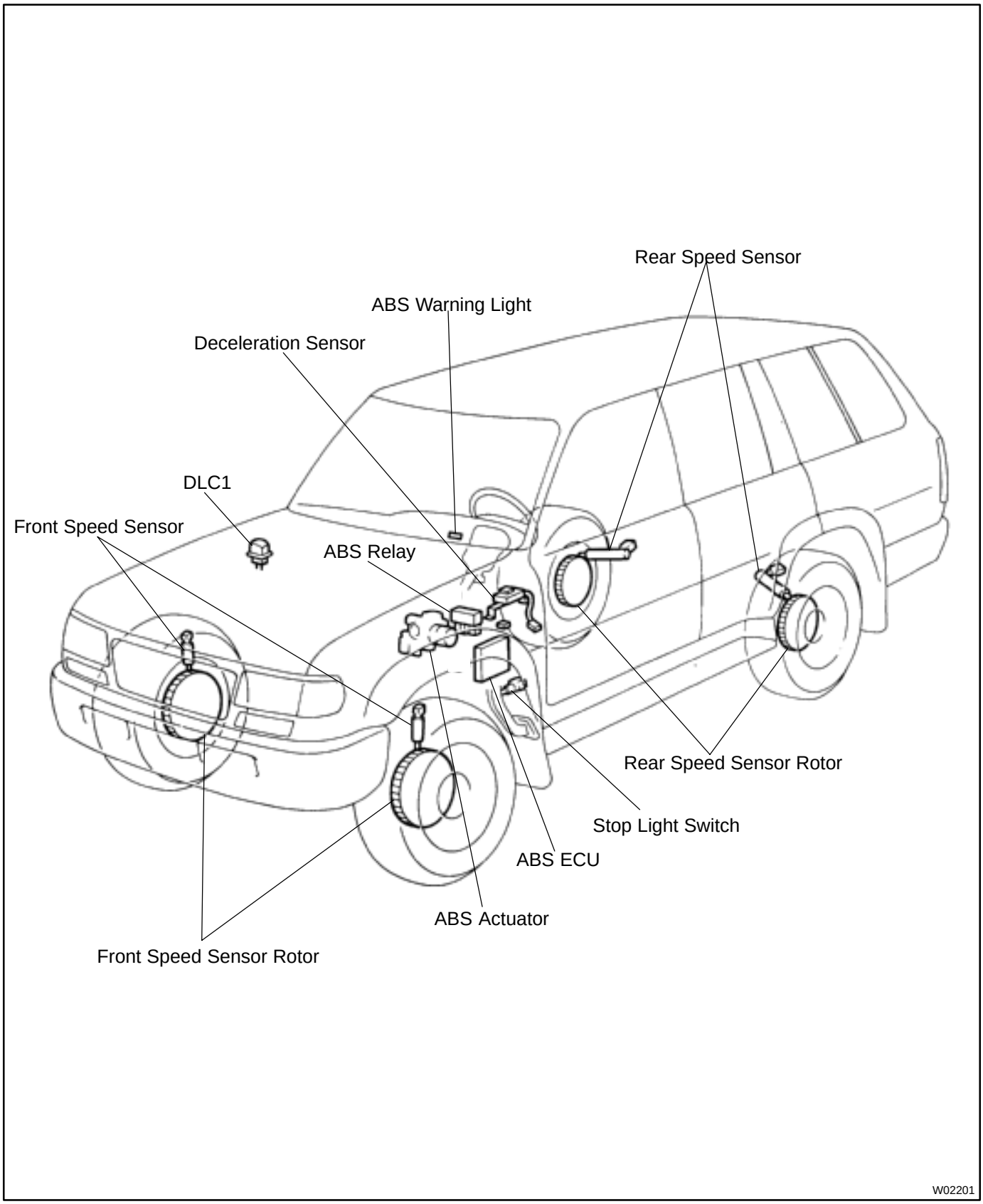

DI13K–02

TERMINALS OF ECM

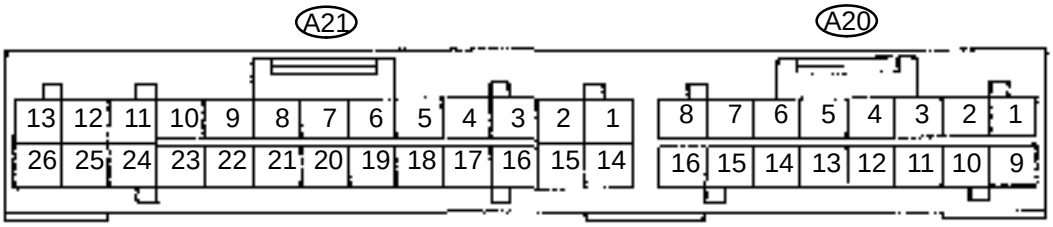

R00463

Symbols (Terminals No.)	STD Voltage (V)	Condition
BAT (A21 – 25) – GND (A21 – 2, 15)	10 – 14	Always
IG1 (A21 – 12) – GND (A21 – 2, 15)	10 – 14	IG switch ON
SR (A21 – 11) – R– (A21 – 24)	9 – 14	IG switch ON, ABS warning light OFF
MR (A21 – 23) – R– (A21 – 24)	Below 1.0	IG switch ON
SFR (A21 – 1) – GND (A21 – 2, 15)	10 – 14	IG switch ON, ABS warning light OFF
SFL (A21 – 13) – GND (A21 – 2, 15)	10 – 14	IG switch ON, ABS warning light OFF
SRR (A21 – 26) – GND (A21 – 2, 15)	10 – 14	IG switch ON, ABS warning light OFF
AST (A21 – 18) – GND (A21 – 2, 15)	10 – 14	IG switch ON, ABS warning light OFF
WA (A20 – 13) – GND (A21 – 2, 15)	Below 2.0	IG switch ON, ABS warning light ON
	10 – 14	IG switch ON, ABS warning light OFF
PKB (A20 – 14) – GND (A21 – 2, 15)	Below 1.5	IG switch ON, PKB switch ON
	8 – 14	IG switch ON, PKB switch OFF
STP (A20 – 6) – GND (A21 – 2, 15)	Below 1.5	Stop light switch OFF
	8 – 14	Stop light switch ON
Tc (A21 – 5) – GND (A21 – 2, 15)	8 – 14	IG switch ON
Ts (A20 – 15) – GND (A21 – 2, 15)	8 – 14	IG switch ON
FR+ (A21 – 16) – FR– (A21 – 3)	AC generation	IG switch ON Slowly turn right front wheel
FL+ (A21 – 9) – FL– (A21 – 22)	AC generation	IG switch ON Slowly turn left front wheel
RR+ (A20 – 8) – RR– (A20 – 16)	AC generation	IG switch ON Slowly turn right rear wheel
RL+ (A20 – 9) – RL– (A20 – 1)	AC generation	IG switch ON Slowly turn left rear wheel
GS1 (A20 – 12) – GND (A21 – 2, 15)	4 – 6 or 7 – 11	IG switch ON
GS2 (A20 – 3) – GND (A21 – 2, 15)	4 – 6	IG switch ON

DI13L–01

PROBLEM SYMPTOMS TABLE

If a normal code is displayed during the DTC check but the problem still occurs, check the circuits for each problem symptom in the order given in the table below and proceed to the relevant troubleshooting page.

Symptoms	Inspection Circuit	See page
ABS does not operate.	Only when 1. – 4. are all normal and the problem is still occurring, replace the ABS ECU. 1. Check the DTC reconfirming that the normal code is output. 2. IG power source circuit. 3. Speed sensor circuit. 4. Check the ABS actuator with a checker. If abnormal, check the hydraulic circuit for leakage (See page DI–224).	 DI–180 DI–202 DI–198 BR–50
ABS does not operate efficiently.	Only when 1. ~ 4. are all normal and the problem is still occurring, replace the ABS ECU. 1. Check the DTC reconfirming that the normal code is output. 2. Speed sensor circuit. 3. Stop light switch circuit. 4. Check the ABS actuator with a checker. If abnormal, check the hydraulic circuit for leakage (See page DI–224).	 DI–180 DI–198 DI–215 BR–50
ABS warning light abnormal.	1. ABS warning light circuit. 2. ABS ECU.	DI–217
DTC check cannot be done.	Only when 1. and 2. are all normal and the problem is still occurring, replace the ABS ECU. 1. ABS warning light circuit. 2. Tc terminal circuit.	 DI–217 DI–220
Speed sensor signal check cannot be done.	1. Ts terminal circuit. 2. ABS ECU.	DI–222

DI13M–03

CIRCUIT INSPECTION

DTC	11, 12	ABS Control (Solenoid) Relay Circuit

CIRCUIT DESCRIPTION

This relay supplies power to each ABS solenoid. After the ignition switch is turned ON, if the initial check is OK, the relay goes on.

DTC No.	DTC Detection Condition	Trouble Area
11	Conditions (a) and (b) continue for 0.2 sec. or more: (a) ABS control (solenoid) relay terminal (SR) voltage: Battery positive voltage (b) ABS control (solenoid) relay monitor terminal (AST) voltage: 0 V	• ABS control (solenoid) relay • Open or short in ABS control (solenoid) relay circuit
12	Conditions (a) and (b) continue for 0.2 sec. or more: (a) ABS control (solenoid) relay terminal (SR) voltage: 0 V (b) ABS control (solenoid) relay monitor terminal (AST) voltage: Battery positive voltage	• ABS control (solenoid) relay • B+ short in ABS control (solenoid) relay circuit

Fail safe function:
If trouble in the ABS control (solenoid) relay circuit, the ECU cuts off current to the ABS control (solenoid) relay and prohibits ABS control.

WIRING DIAGRAM

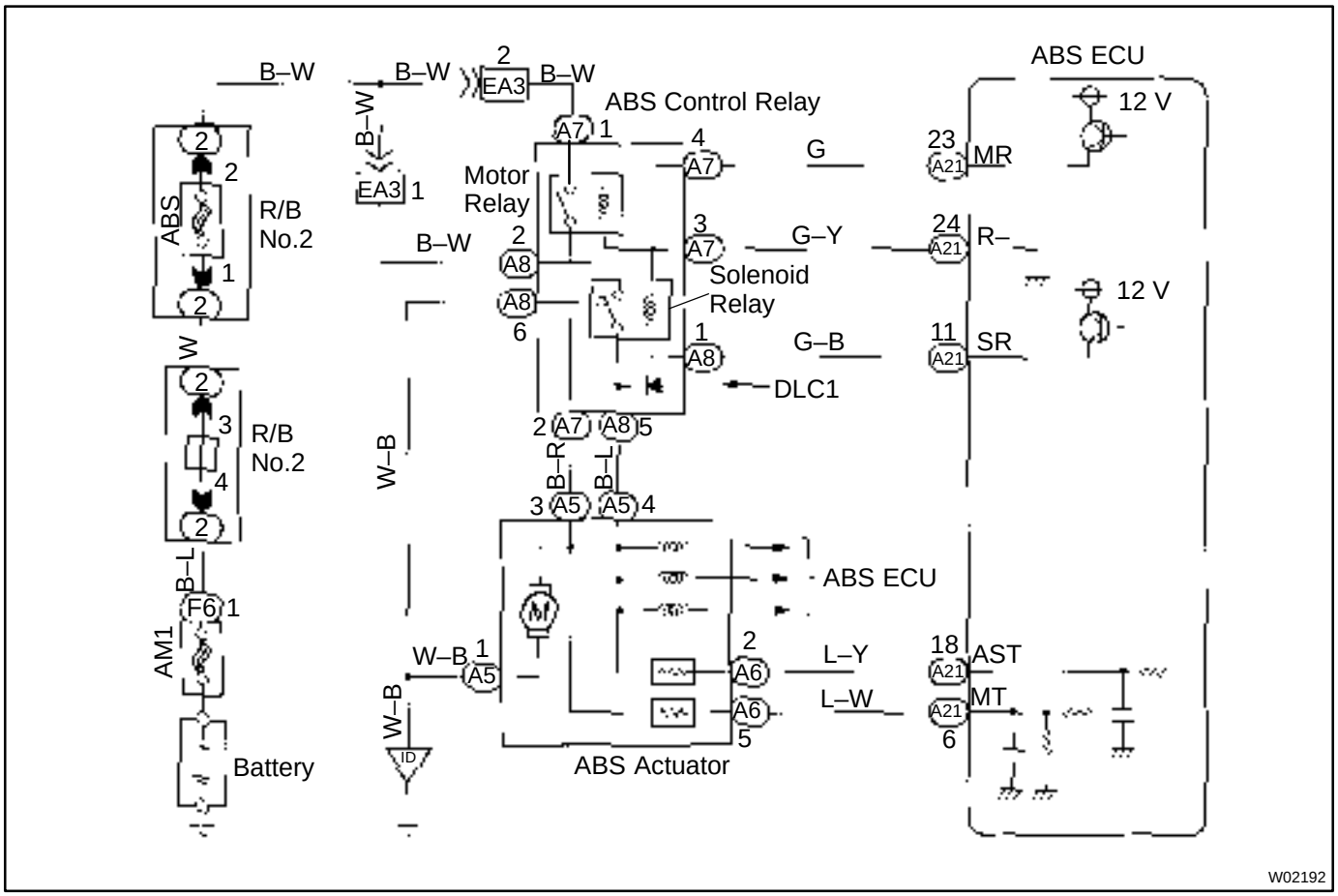

INSPECTION PROCEDURE

1	**Check voltage between terminals A8 – 2 and A8 – 6 of ABS control relay connector.**

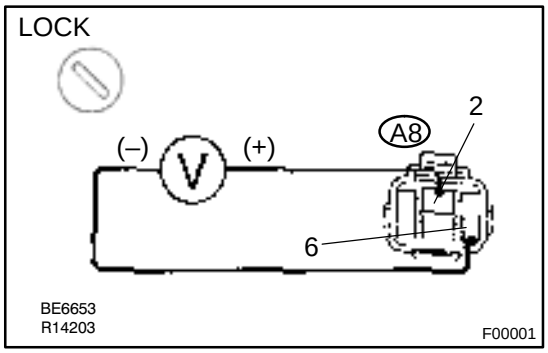

PREPARATION:
Disconnect the ABS control relay connector.
CHECK:
Measure the voltage between terminals A8 – 2 and A8 – 6 of ABS control relay harness side connector.
OK:
Voltage: 10 – 14 V

NG → **Check and repair harness or connector.**

OK

2	**Check continuity between terminals A8 – 5 and A5 – 4, A5 – 4 and A6 – 2, A6 – 2 and A21 – 18.**

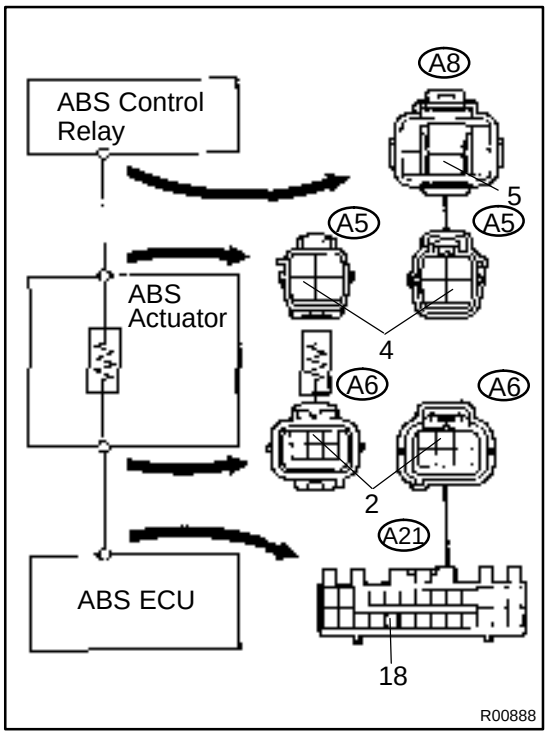

PREPARATION:
Disconnect the 2 connectors from ABS actuator.
CHECK:
Check the continuity between terminals A8 – 5 and A5 – 4, A5 – 4 and A6 – 2, A6 – 2 and A21 – 18.
OK:
Continuity
HINT:
There is a resistance of 4 – 6 Ω between terminals A5 – 4 and A6 – 2.

NG → **Repair or replace harness or ABS actuator.**

OK

3	**Check ABS control (solenoid) relay.**

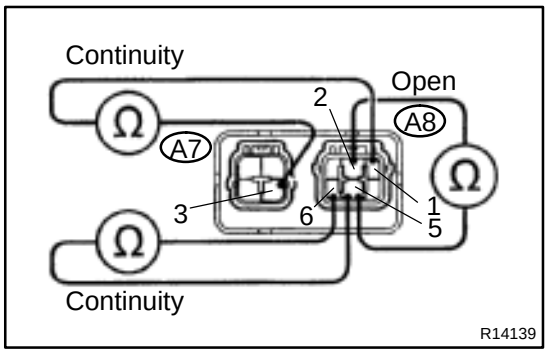

CHECK:

Check the continuity between each terminal of ABS control (solenoid) relay.

OK:

Terminals A8 – 1 and A7 – 3	Continuity (Reference value aprox. 80 Ω)
Terminals A8 – 5 and A8 – 6	Continuity
Terminals A8 – 2 and A8 – 5	Open

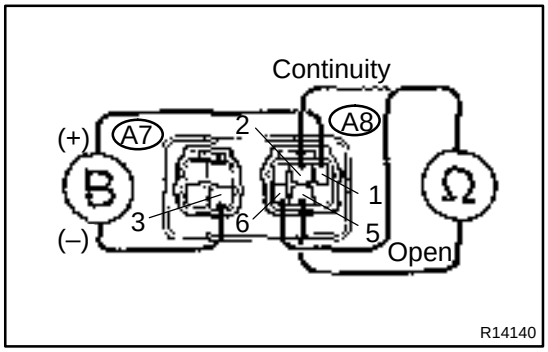

CHECK:

(a) Apply battery positive voltage between terminals A8 – 1 and A7 – 3.

(b) Check the continuity between each terminal of ABS control (solenoid) relay.

OK:

Terminals A8 – 5 and A8 – 6	Open
Terminals A8 – 2 and A8 – 5	Continuity

NG → **Replace ABS control relay.**

OK

4	**Check for open and short in harness and connector between ABS control (solenoid) relay and ABS ECU (See page IN–27).**

NG → **Repair or replace harness or connector.**

OK

If the same code is still output after the DTC is deleted, check the contact condition of each connection. If connections are normal, the ECU may be defective.

DI13N–03

DTC	13, 14	ABS Control (Motor) Relay Circuit

CIRCUIT DESCRIPTION

The ABS control (motor) relay supplies power to the ABS pump motor. While the ABS is activated, the ECU switches the ABS control (motor) relay ON and operates the ABS pump motor.

DTC No.	DTC Detection Condition	Trouble Area
13	Conditions (a) and (b) continued for 0.2 sec. or more: (a) ABS control (motor) relay terminal (MR) voltage: Battery positive voltage (b) ABS control (motor) relay monitor terminal (MT) voltage: 0 V	• ABS control (motor) relay • Open or short in ABS control (motor) relay circuit
14	Conditions (a) and (b) continued for 2.5 sec. or more: (a) ABS control (motor) relay terminal (MR) voltage: 0 V (b) ABS control (motor) relay monitor terminal (MT) voltage: Battery positive voltage	• ABS control (motor) relay • B+ short in ABS control (motor) relay circuit

Fail safe function:
If trouble occurs in the ABS control (motor) relay circuit, the ECU cuts off current to the ABS control (solenoid) relay and prohibits ABS control.

WIRING DIAGRAM

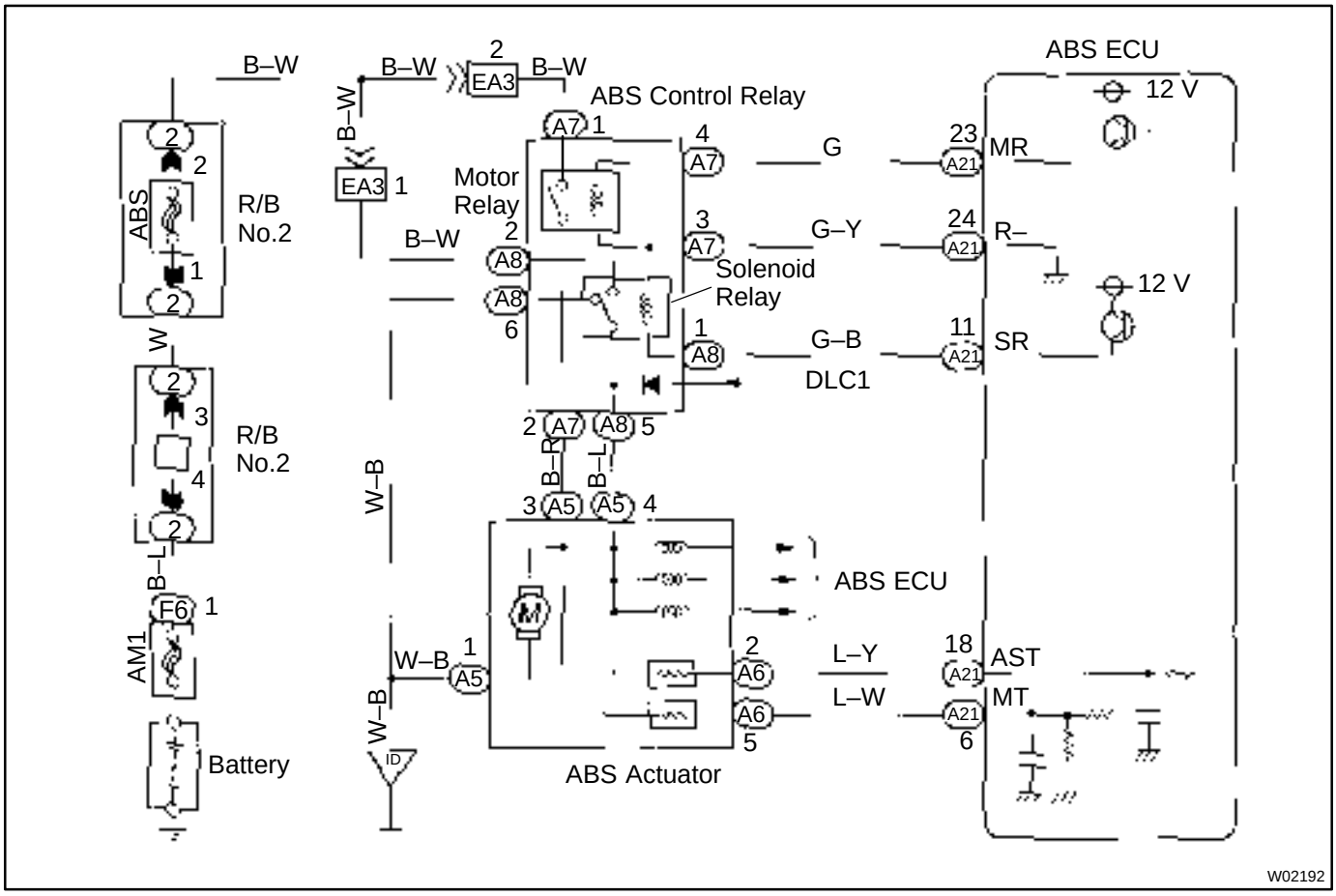

INSPECTION PROCEDURE

1	**Check voltage between terminal A7 – 1 of ABS control relay and body ground.**

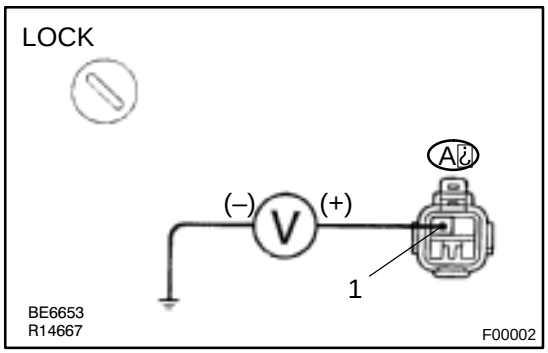

PREPARATION:
Disconnect the ABS control relay connector.
CHECK:
Measure the voltage between terminal A7 – 1 of ABS control relay harness side connector and body ground.
OK:
Voltage: 10 – 14 V

NG → **Check and repair harness or connector.**

OK

2	**Check continuity between terminals A7 – 2 and A5 – 3, A5 – 3 and A6 – 5, A6 – 5 and A21 – 6.**

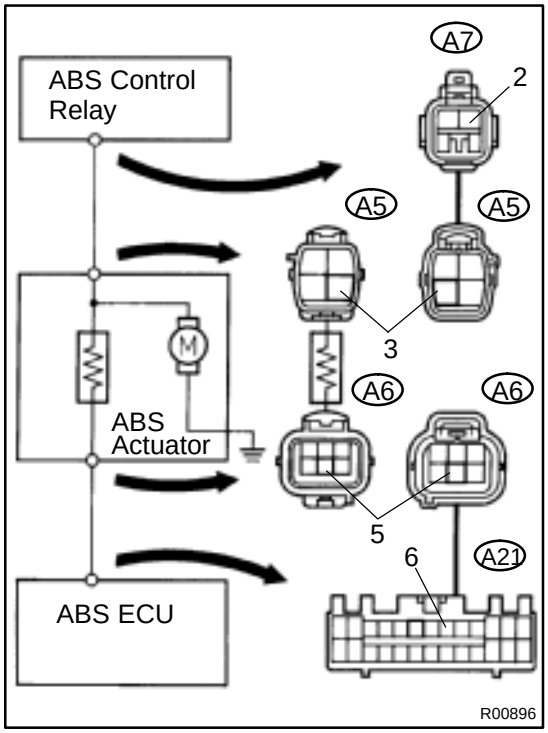

PREPARATION:
Disconnect the 2 connectors from ABS actuator.
CHECK:
Check the continuity between terminals A7 – 2 and A5 – 3, A5 – 3 and A6 – 5, A6 – 5 and A21 – 6.
OK:
Continuity
HINT:
There is a resistance of 4 ~ 6 Ω between terminals A5 – 3 and A6 – 5.

NG → **Repair or replace harness or ABS actuator.**

OK

3	**Check ABS control (motor) relay.**

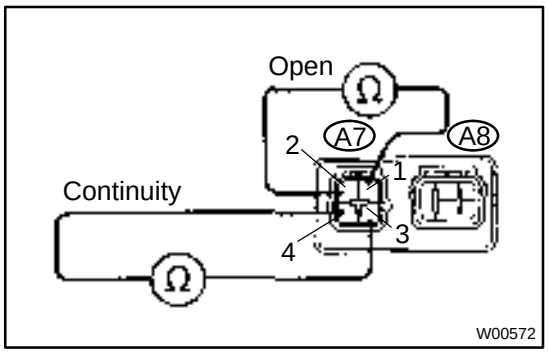

CHECK:

Check the continuity between each terminal of ABS control (motor) relay.

OK:

Terminals A7 – 3 and A7 – 4	Continuity (Reference value aprox. 62 Ω)
Terminals A7 – 1 and A7 – 2	Open

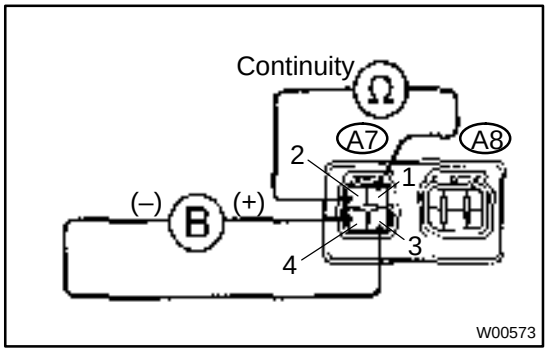

CHECK:

(a) Apply battery positive voltage between terminals A7 – 3 and A7 – 4.

(b) Check the continuity between each terminal of ABS control relay.

OK:

Terminals A7 – 1 and A7 – 2	Continuity

NG → **Replace ABS control relay.**

OK

4	**Check for open and short in harness and connector between ABS control relay and ABS ECU (See page IN–27).**

NG → **Repair or replace harness or connector.**

OK

If same code is still output after the DTC is deleted, check the contact condition of each connection. If the connections are normal, the ECU may be defective.

DI13O–03

DTC	21, 22, 23	ABS Actuator Solenoid Circuit

CIRCUIT DESCRIPTION

This solenoid goes on when signals are received from the ECU and controls the pressure acting on the wheel cylinders thus controlling the braking force.

DTC No.	DTC Detection Condition	Trouble Area
21	Conditions (a) through (c) continue for 0.05 sec. or more: (a) ABS control (solenoid) relay terminal (SR) voltage: Battery positive voltage (b) Voltage of ABS ECU terminal AST: Battery positive voltage (c) When power transistor of ECU is ON, voltage of terminal SFR is 0 V or battery positive voltage.	• ABS actuator • Open or short in SFR circuit
22	Conditions (a) through (c) continue for 0.05 sec. or more: (a) ABS control (solenoid) relay terminal (SR) voltage: Battery positive voltage (b) Voltage of ABS ECU terminal AST: Battery positive voltage (c) When power transistor of ECU is ON, voltage of terminal SFL is 0 V or battery positive voltage.	• ABS actuator • Open or short in SFL circuit
23	Conditions (a) through (c) continue for 0.05 sec. or more: (a) ABS control (solenoid) relay terminal (SR) voltage: Battery positive voltage (b) Voltage of ABS ECU terminal AST: Battery positive voltage (c) When power transistor of ECU is ON, voltage of terminal SRR is 0 V or battery positive voltage.	• ABS actuator • Open or short in SRR circuit

Fail safe function:

If trouble occurs in the actuator solenoid circuit, the ECU cuts off current to the ABS control (solenoid) relay and prohibits ABS control.

WIRING DIAGRAM

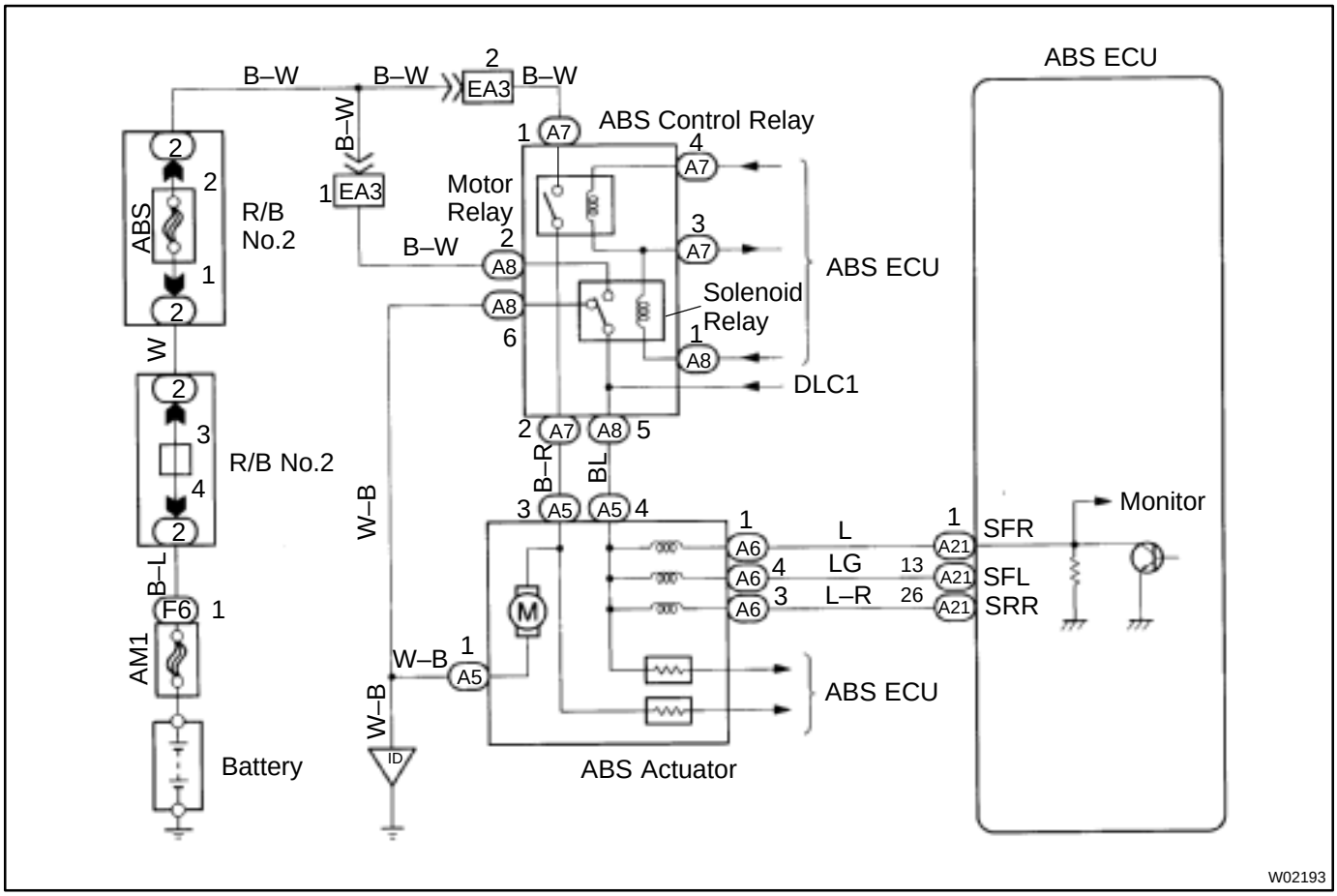

INSPECTION PROCEDURE

1	**Check ABS actuator solenoid.**

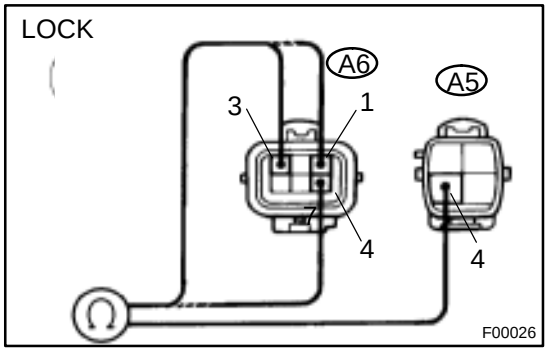

PREPARATION:

Disconnect the 2 connectors from ABS actuator.

CHECK:

Check the continuity between terminals A5 – 4 and A6 – 1, 3, 4 of ABS actuator connector.

OK:

Continuity

HINT:

Resistance of each solenoid coil is 0.8 – 1.6 Ω

NG → **Replace ABS actuator.**

OK

2	**Check for open and short in harness and connector between ABS ECU and actuator (See page IN–27).**

NG → **Repair or replace harness or connector.**

OK

If same code is still output after DTC is deleted, check contact condition of each connection. If connector are normal, ECU may be defective.

DI13P–02

DTC	31, 32, 33, 34, 35, 36	Speed Sensor Circuit

CIRCUIT DESCRIPTION

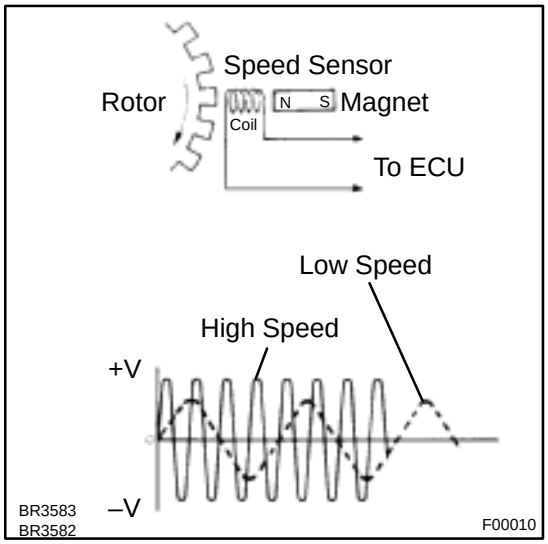

The speed sensor detects wheel speed and sends the appropriate signals to the ECU. These signals are used to control the ABS system. The front and rear rotors each have 48 serrations.
When the rotors rotate, the magnetic field emitted by the permanent magnet in the speed sensor generates an AC voltage. Since the frequency of this AC voltage changes in direct proportion to the speed of the rotor, the frequency is used by the ECU to detect the speed of each wheel.

DTC No.	DTC Detection Condition	Trouble Area
31, 32, 33, 34	Detection of any of conditions (a) through (b): (a) At vehicle speed of 10 km/h (6 mph) or more, pulses are not input for 5 sec. (b) Momentary interruption of the speed sensor signal occurs at least 7 times in the time between switching the ignition switch ON and switching it OFF. (c) Abnormal fluctuation of speed sensor signals with the vehicle speed 20 km/h (12 mph) or more.	• Right front, left front, right rear, left rear speed sensor • Open or short in each speed sensor circuit • Sensor rotor
35	Speed sensor signal is not input for about 1 sec. while the left front and right rear speed sensor signals are being checked with the IG switch ON.	• Open in left front or right rear speed sensor circuit
36	Speed sensor signal is not input for about 1 sec. while the right front and left rear speed sensor signals are being checked with the IG switch ON.	• Open in right front or left rear speed sensor circuit

HINT:
- DTC No. 31 is for the right front speed sensor.
- DTC No. 32 is for the left front speed sensor.
- DTC No. 33 is for the right rear speed sensor.
- DTC No. 34 is for the left rear speed sensor.

Fail safe function:
If trouble occurs in the speed sensor circuit, the ECU cuts off current to the ABS control (solenoid) relay and prohibits ABS control.

WIRING DIAGRAM

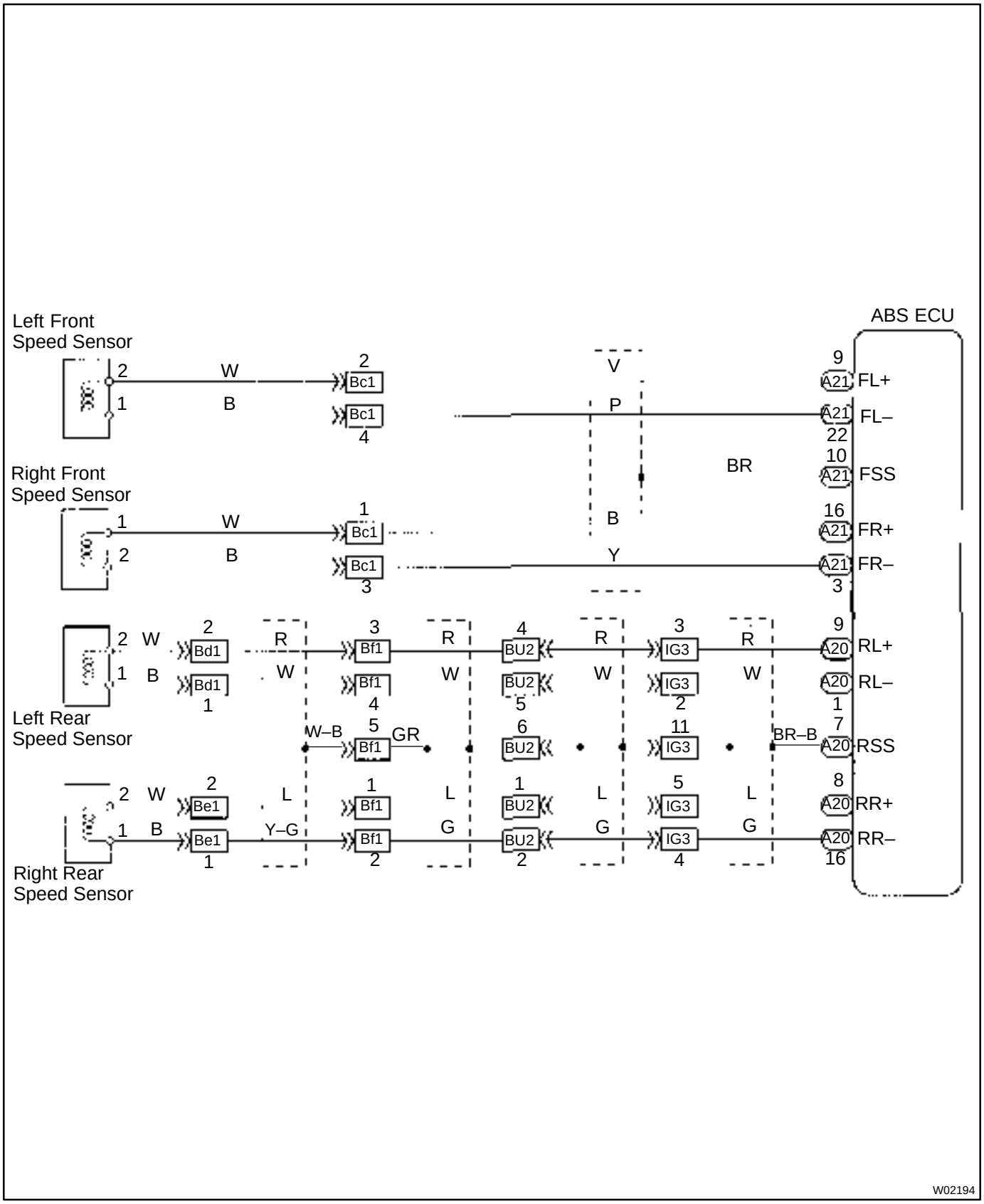

INSPECTION PROCEDURE

1	**Check speed sensor.**

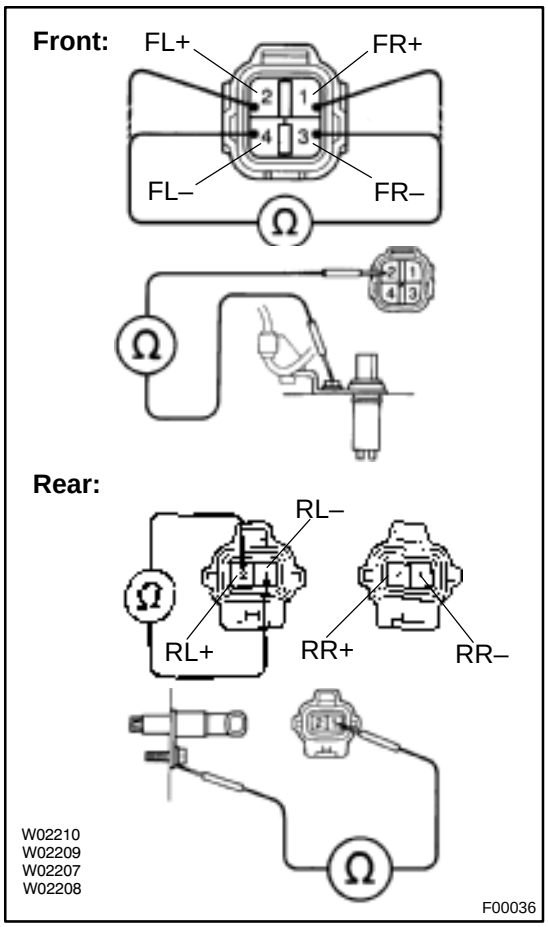

Front

PREPARATION:

Disconnect the speed sensor connector.

CHECK:

Measure the resistance between terminals 1 and 2, 3 and 4 of speed sensor connector.

OK:

Resistance: 0.8 – 2.0 kΩ

CHECK:

Measure the resistance between terminals 1 and 2 of speed sensor connector and body ground.

OK:

Resistance: 1 MΩ or higher

Rear

PREPARATION:

Disconnect the speed sensor connector.

CHECK:

Measure the resistance between terminals 1 and 2 of speed sensor connector.

OK:

Resistance: 0.5 – 1.6 kΩ

CHECK:

Measure the resistance between terminals 1 and 2 of speed sensor connector and body ground.

OK:

Resistance: 1 MΩ or higher

NG	**Replace speed sensor.**

NOTICE:

Check the speed sensor signal last (See page DI–180).

OK

2	**Check for open and short in harness and connector between each speed sensor and ECU (See page IN–27).**

NG	**Repair or replace harness or connector.**

OK

3	Check sensor rotor and sensor installation.

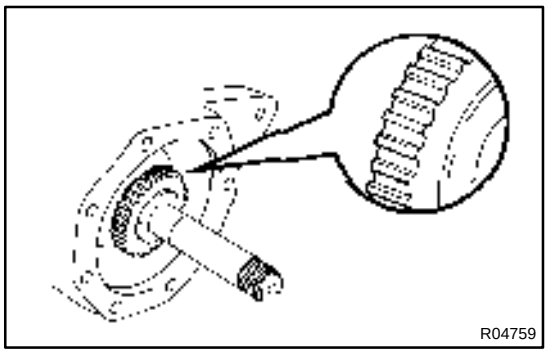

Front

PREPARATION:

Remove the front axle hub and knuckle spindle (See page SA–8).

CHECK:

Check the sensor rotor serrations.

OK:

No scratches or missing teeth.

CHECK:

Check the sensor tip and grease.

OK:

No scratches or foreign objects on the sensor tip and grease.

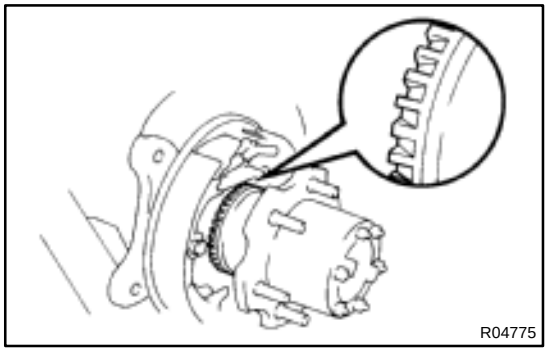

Rear

PREPARATION:

Remove the rear brake caliper and disc.

CHECK:

Check the sensor rotor serrations.

OK:

No scratches or missing teeth.

CHECK:

Check the sensor tip.

OK:

No scratches or foreign objects on the sensor tip.

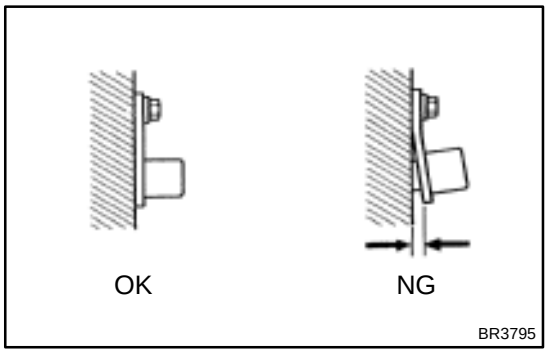

CHECK:

Check the speed sensor installation.

OK:

The installation bolt is tightened properly and there is no clearance between the sensor and steering knuckle or rear axle carrier.

NG → **Replace speed sensor or rotor.**

NOTICE:

Check the speed sensor signal last (See page DI–180).

OK

Check and replace ABS ECU.

DI13R–02

DTC	41	IG Power Source Circuit

CIRCUIT DESCRIPTION

This is the power source for the ECU, hence the CPU and actuators.

DTC No.	DTC Detection Condition	Trouble Area
41	Vehicle speed is 3 km/h (1.9 mph) or more and voltage of ECU terminal IG1 remains at more than 17 V or below 9.5 V for more than 10 sec.	• Battery • IC regulator • Open or short in power source circuit

Fail safe function:
If trouble occurs in the power source circuit, the ECU cuts off current to the ABS control (solenoid) relay and prohibits ABS control.

WIRING DIAGRAM

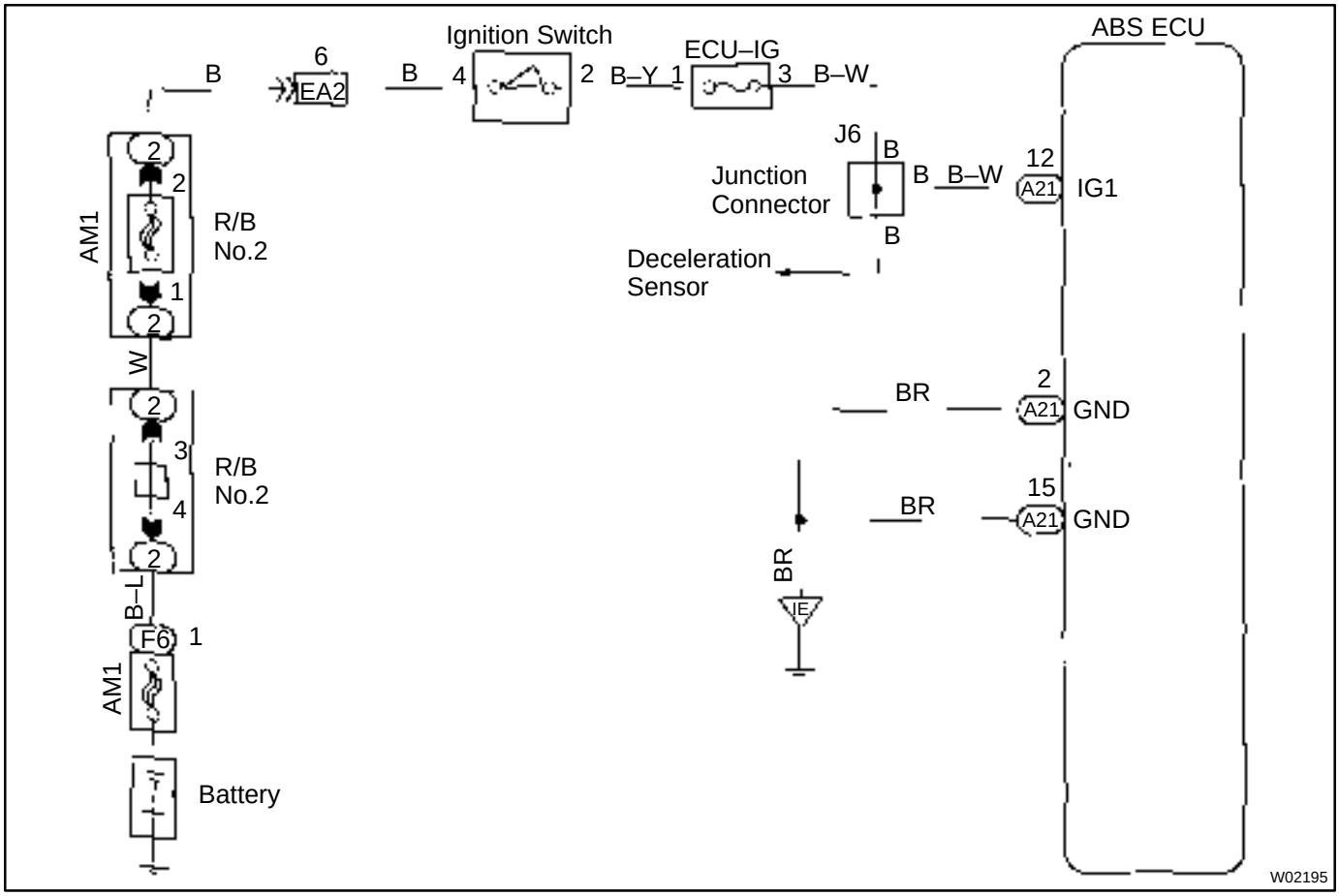

INSPECTION PROCEDURE

1	**Check battery positive voltage.**

OK:

Voltage: 10 – 14 V

NG → **Check and repair charging system.**

OK

2	**Check voltage between terminals IG1 and GND of ABS ECU connector.**

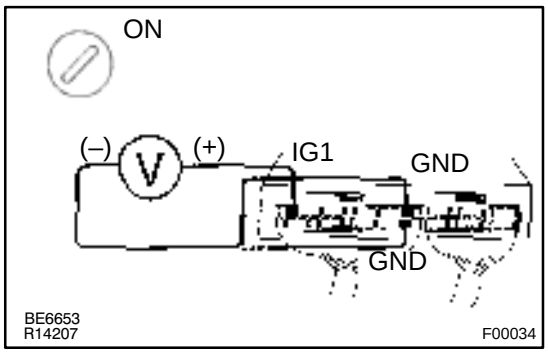

PREPARATION:

Remove the ABS ECU with connectors still connected.

CHECK:

(a) Turn the ignition switch ON.

(b) Measure the voltage between terminals IG1 and GND of ABS ECU connector.

OK:

Voltage: 10 – 14 V

OK → **Check and replace ABS ECU.**

NG

3	**Check continuity between terminals GND of ABS ECU connector and body ground.**

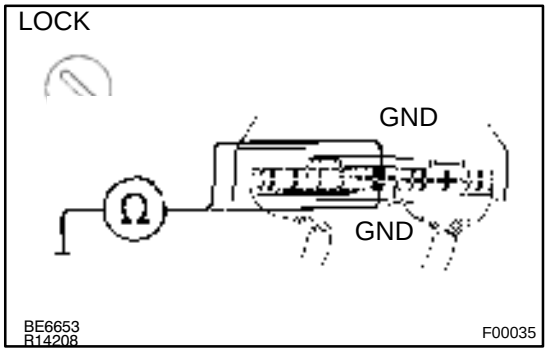

CHECK:

Measure the resistance between terminal GND of ABS ECU connector and body ground.

OK:

Resistance: 1 Ω or less

NG → **Repair or replace harness or connector.**

OK

4	**Check ECU–IG fuse.**

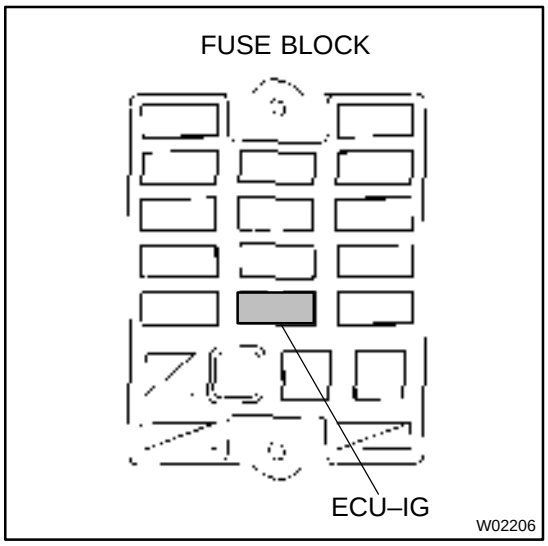

PREPARATION:
Remove the ECU–IG fuse from FUSE BLOCK.
CHECK:
Check the continuity of ECU–IG fuse.
OK:
Continuity

NG → **Check for short in all harness and components connected to ECU–IG fuse (See attached wiring diagram).**

OK →

Check for open in harness and connector between ABS ECU and battery (See page IN–27).

DI13S–03

DTC	43	Malfunction in Deceleration Sensor

CIRCUIT DESCRIPTION

DTC No.	DTC Detection Condition	Trouble Area
43	Either of the following (a) or (b) is detected: (a) After the battery terminal is connected, input from the deceleration sensor does not change at one cycle (0 km/h → more than 30 km/h → 0 km/h) for 16 times continuously. (b) When the brake pedal is not depressed at vehicle speed of 5 km/h or more, forward and backward G (more than 0.4 G) is detected for 30 seconds or more.	• Deceleration sensor • Wire harness for deceleration sensor system

INSPECTION PROCEDURE

1	Check deceleration sensor (See page DI–180).

NG → Replace deceleration sensor.

OK

2	Check for open or short in harness and connector between sensor and ECU (See page IN–27).

NG → Repair or replace harness and connector.

OK

Check and replace ABS ECU.

DI13T–03

DTC	44	Deceleration Sensor Circuit

CIRCUIT DESCRIPTION

This sensor detects deceleration on the vehicle. The sensor signal is used in ABS control. If the sensor functions abnormally, the ABS warning light comes on but the ABS still operates.

DTC No.	DTC Detection Condition	Trouble Area
44	Either of the following (a) or (b) is detected: (a) An open or short is detected in circuit GS1 or GS2 for 1sec. (b) After the ignition is turned ON, the test signal is output by GST. During this time, a trouble signal is detected for 0.5 sec.	• Deceleration sensor • Open or short in deceleration sensor circuit

WIRING DIAGRAM

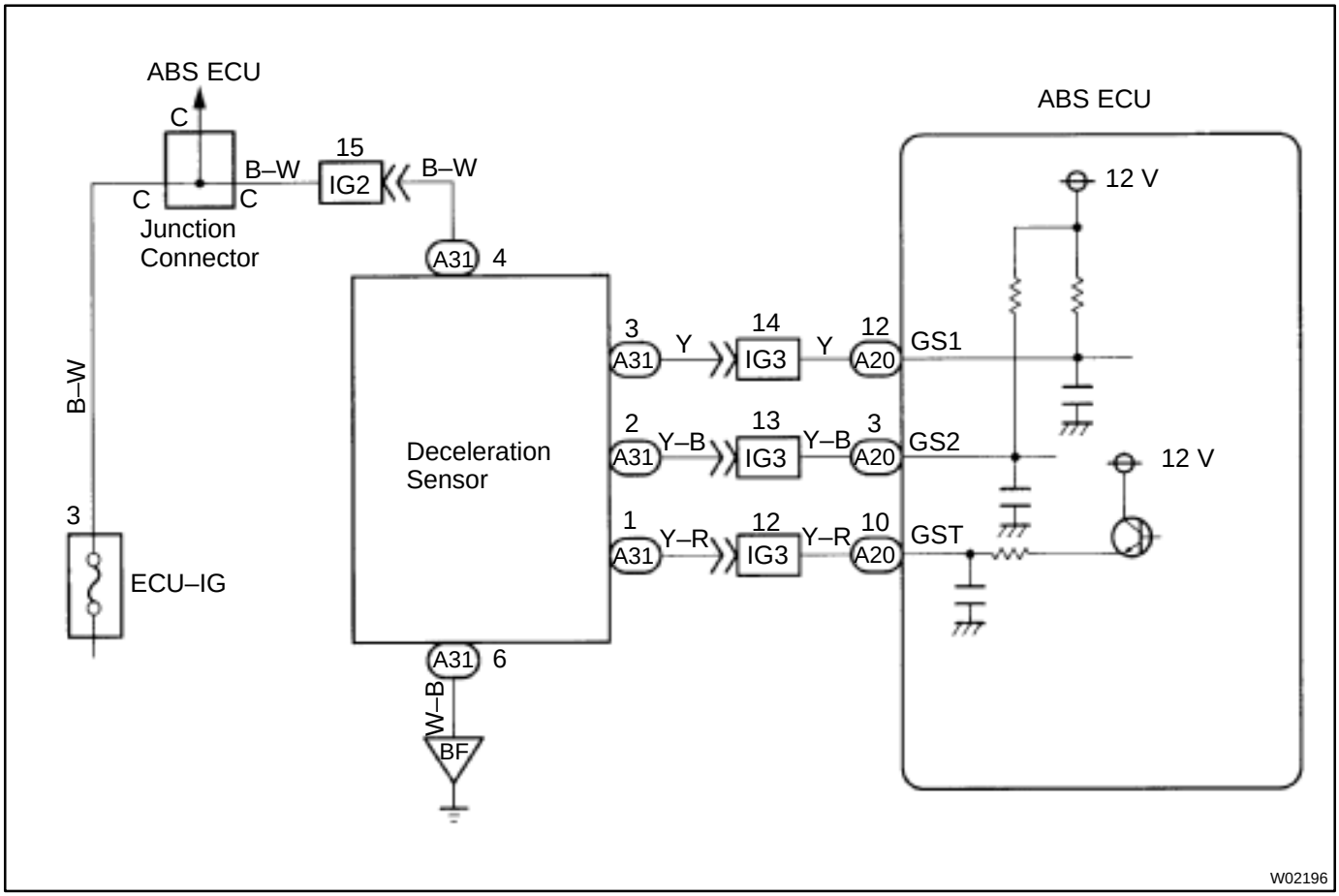

INSPECTION PROCEDURE

1	**Check for open and short in harness and connector between Deceleration sensor and ECU (See page IN–27).**

NG → **Repair or replace harness or connector.**

OK

2	**Check voltage between terminals GS1, GS2, GST of ABS ECU and body ground.**

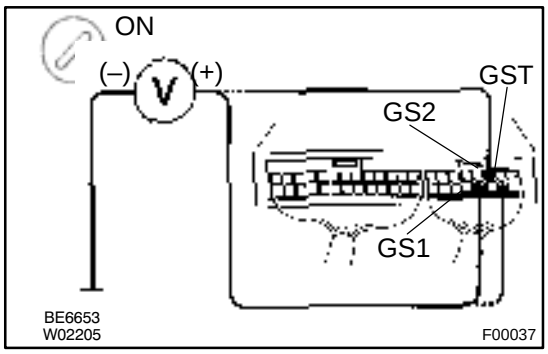

PREPARATION:

(a) Remove the ABS ECU with connectors still connected.
(b) Disconnect the deceleration sensor connector.
(c) Turn the ignition switch ON.

CHECK:

Measure the voltage between terminals GS1, GS2, GST of ECU and Body ground.

OK:

Voltage:
GS1, GS2: 4 – 14 V
GST: As shown below

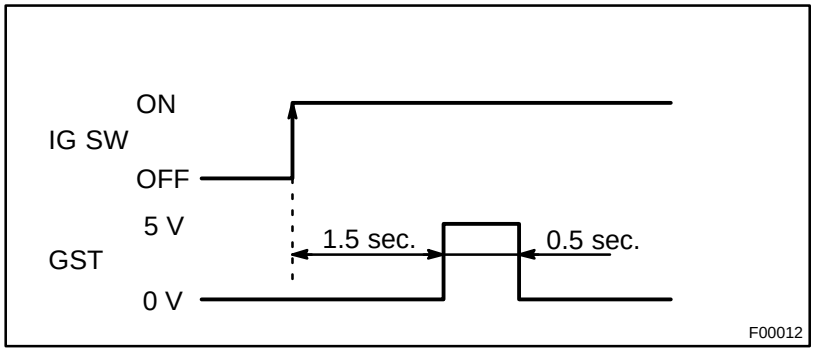

NG → **Check and replace ABS ECU.**

OK

Check and replace deceleration sensor.

DI13U–10

DTC	48	Center Differential Lock circuit

CIRCUIT DESCRIPTION

DTC No.	DTC Detection Condition	Trouble Area
48	Open or short circuit in center differential lock circuit. Center differential is locking.	• Center differential lock • Center differential lock circuit

WIRING DIAGRAM

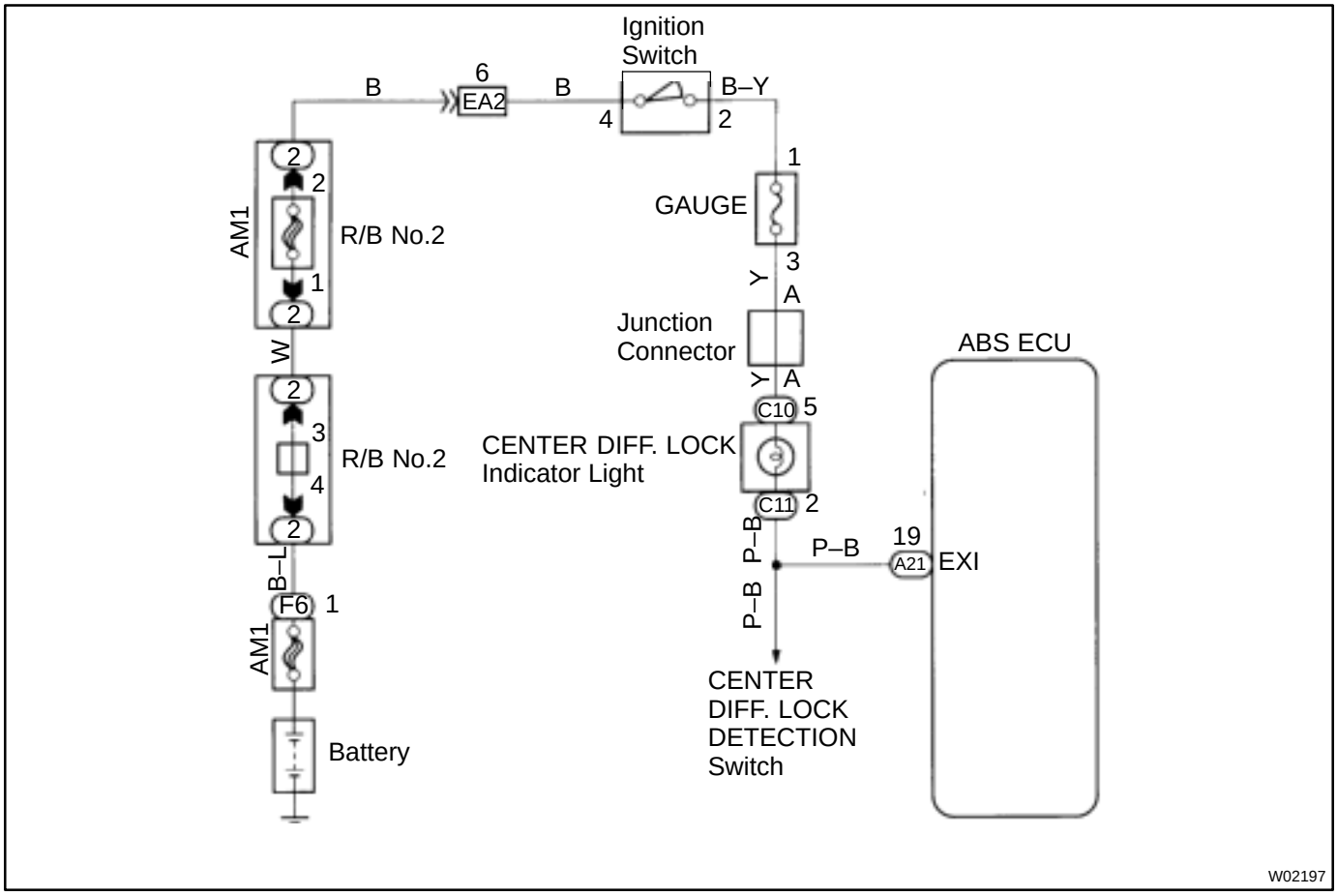

INSPECTION PROCEDURE

1	**Check center differential is free (Transfer is in H position).**

NG → **Repair center differential lock system.**

OK

2	**Is DTC output?**

Check DTC on page DI–180.

NO → **Normal.**

YES

3	**Check that CENTER DIFF. LOCK indicator light does not go off.**

NO → **Go to step 6.**

YES

4	**Check that bulb for CENTER DIFF. LOCK indicator light is not burnt out.**

YES → **Replace indicator light.**

NO

5	**Check for open in harness and connector between battery and CENTER DIFF. LOCK indicator light, CENTER DIFF. LOCK indicator light and ABS ECU (See page IN–27).**

NG → **Repair or replace harness or connector.**

OK

6	**Check for short in harness and connector between CENTER DIFF. LOCK indicator light and ABS ECU (See page IN–27).**

NG → **Repair or replace harness or connector.**

OK

Check and replace ABS ECU.

DI13V–03

DTC	51	ABS Pump Motor Lock

CIRCUIT DESCRIPTION

DTC No.	DTC Detection Condition	Trouble Area
51	Pump motor is not operating normally during initial check.	• ABS pump motor

Fail safe function:
If trouble occurs in the ABS pump motor, the ECU cuts off current to the ABS control (solenoid) relay and prohibits ABS control.

WIRING DIAGRAM

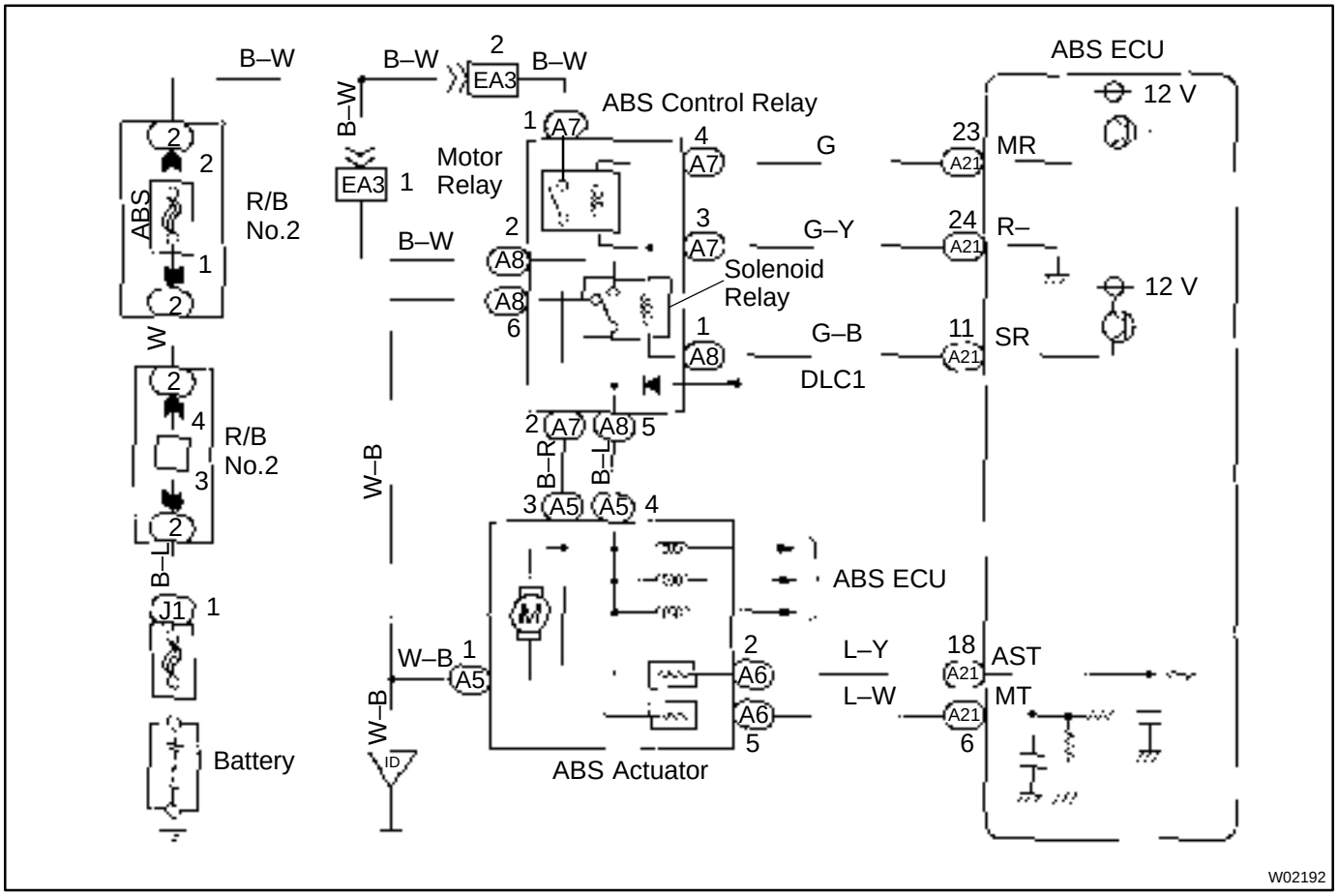

DI7KD–01

DTC	Always ON	Malfunction in ECU IG Power Source Circuit

CIRCUIT DESCRIPTION

This is the power source for the ECU, hence the CPU, and the actuator.

DTC No.	DTC Detection Condition	Trouble Area
Alway ON	Voltage of ECU terminal IG1 remains at more than 17 V or below 9.5 V.	• Battery • IC regulator • Open or short in power source circuit • ECU

Fail safe function:
If trouble occurs in the power source circuit, the ECU cuts off current to the ABS control (solenoid) relay and prohibits ABS control.

WIRING DIAGRAM

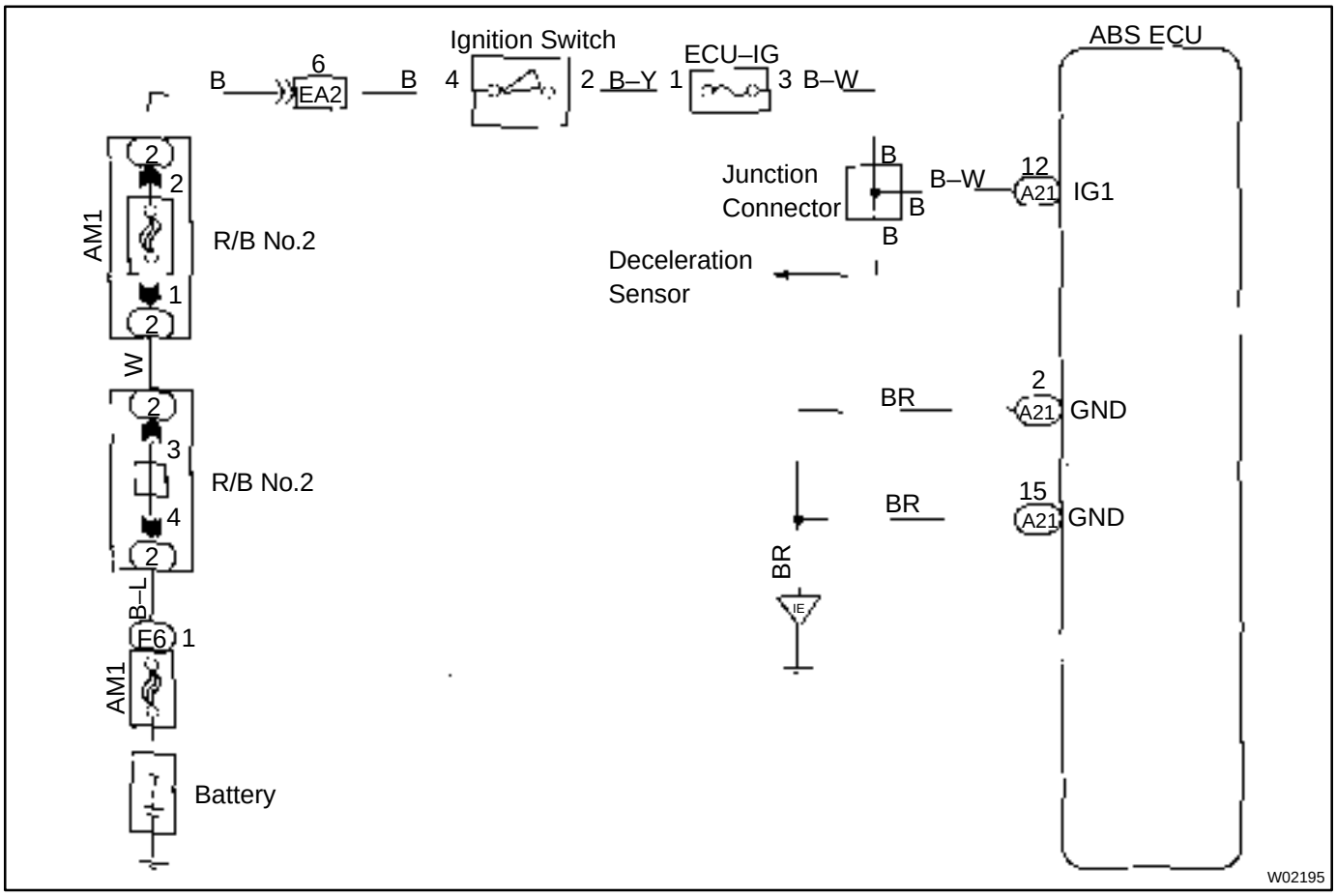

INSPECTION PROCEDURE

1	**Is DTC output?**

Check DTC on page DI–180.

YES → **Repair circuit indicated by code output.**

NO ↓

2	**Is normal code displayed?**

YES → **Check ABS solenoid relay. Check for short in harness and connector between ABS solenoid relay and DLC1 (See page IN–27).**

NO ↓

3	**Is ABS warning light go off?**

YES → **Check for open or short in harness and connector between ECU–IG fuse and ECU (See page IN–27).**

NO ↓

4	**Check battery positive voltage.**

PREPARATION:
Start the engine.
CHECK:
Check the battery positive voltage.
OK:
Voltage: 10 – 16 V

NG → **Check and repair charging system.**

OK

5	**Check ABS warning light.**

PREPARATION:
(a) Turn the ignition switch OFF.
(b) Disconnect the connector from the ABS ECU.
(c) Turn the ignition switch ON.
CHECK:
Check the ABS warning light goes off.

OK → **Check and replace ABS ECU.**

NG

Check for short in harness and connector between combination meter and ABS ECU, combination meter and DLC1(See page IN–27).

DI13W–03

Stop Light Switch Circuit

CIRCUIT DESCRIPTION

This stop light switch senses whether the brake pedal is depressed or released, and sends the signal to the ECU.

WIRING DIAGRAM

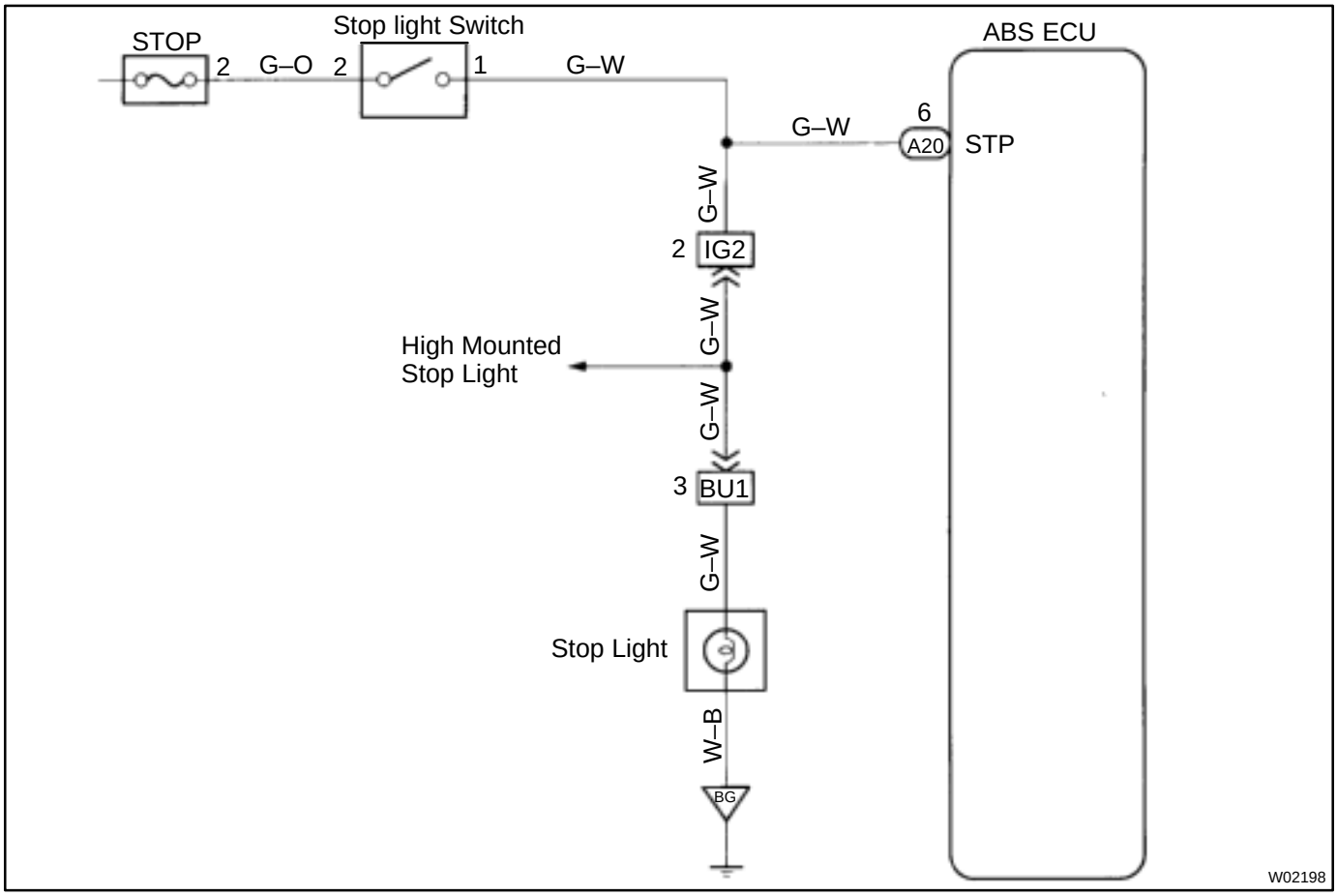

INSPECTION PROCEDURE

1	**Check operation of stop light.**

CHECK:

Check that stop light lights up when brake pedal is depressed and turns off when brake pedal is released.

NG → **Repair stop light circuit (See page BE–40).**

OK

2	**Check voltage between terminal STP of ABS ECU and body ground.**

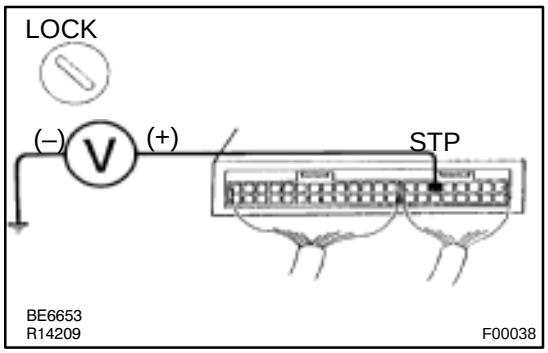

PREPARATION:

Remove the ABS ECU with connectors still connected.

CHECK:

Measure the voltage between terminal STP of ABS ECU and body ground when brake pedal is depressed.

OK:

Voltage: 8 – 14 V

OK → **Proceed to next circuit inspection shown on problem symptoms table (See page DI–188).**

NG

3	**Check for open in harness and connector between ABS ECU and stop light switch (See page IN–27).**

NG → **Repair or replace harness or connector.**

OK

Check and replace ABS ECU.

DI13X–03

ABS Warning Light Circuit

CIRCUIT DESCRIPTION

If the ECU detects trouble, it lights the ABS warning light while at the same time prohibiting ABS control. At this time, the ECU records a DTC in memory.
After removing the short pin of the DLC1, connect terminals Tc and E_1 of the DLC1 to make the ABS warning light blink and output the DTC.

WIRING DIAGRAM

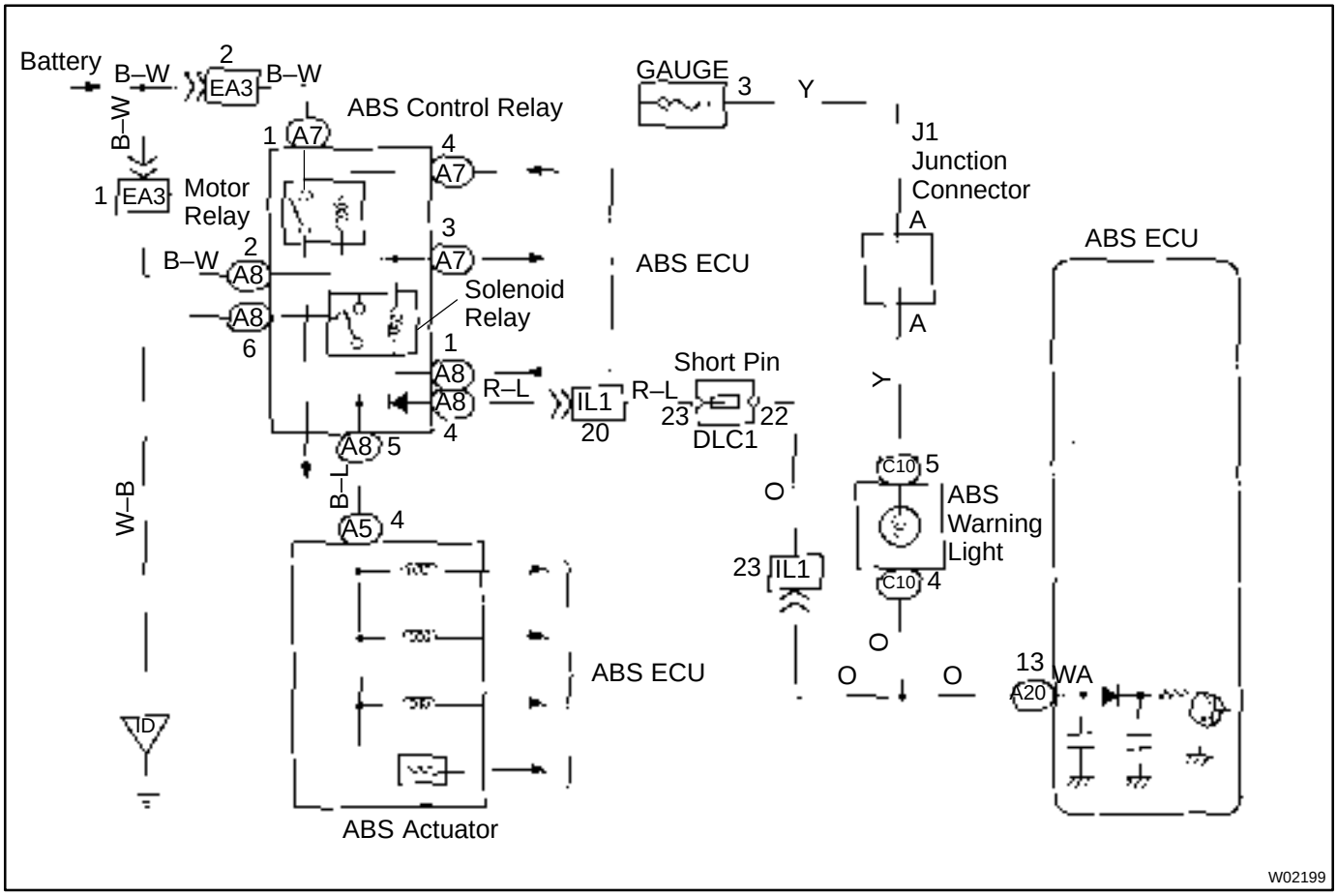

INSPECTION PROCEDURE

Troubleshooting in accordance with the chart below for each trouble symptom.

ABS warning light does not light up	Go to step 1
ABS warning light remains on	Go to step 3

1	**Check ABS warning light.**

See Combination Meter Troubleshooting on page BE–2.

NG → **Repair bulb or combination meter assembly.**

OK

2	**Check ABS control relay.**

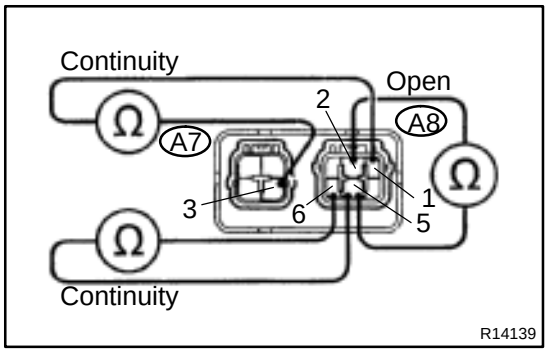

PREPARATION:

(a) Turn the ignition switch OFF.

(b) Disconnect the connectors from control relay.

CHECK:

Check the continuity between each terminal of ABS control relay.

OK:

Terminals A8 – 1 and A7 – 3	Continuity (Reference value 80 Ω)
Terminals A8 – 5 and A8 – 6	Continuity
Terminals A8 – 2 and A8 – 5	Open

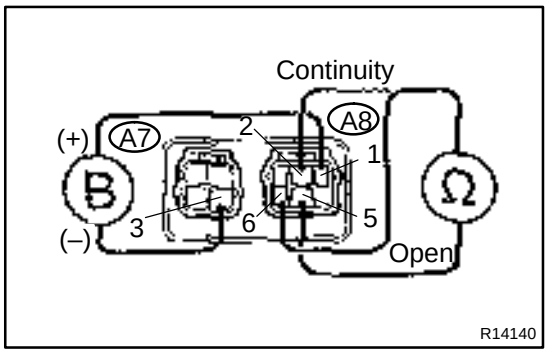

CHECK:

(a) Apply battery positive voltage between terminals A8 – 1 and A7 – 3.

(b) Check the continuity between each terminal of ABS control relay.

OK:

Terminals A8 – 5 and A8 – 6	Open
Terminals A8 – 2 and A8 – 5	Continuity

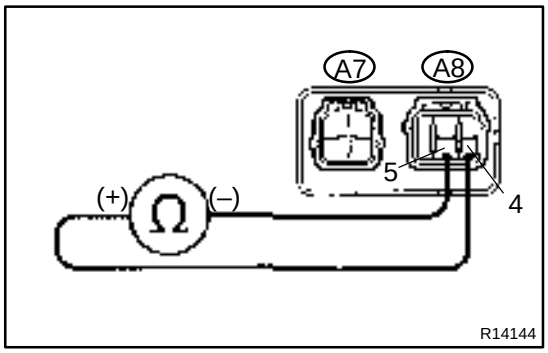

CHECK:

Connect the ⊕ test lead to terminal 4 of A8 and the ⊖ test lead to terminal 5 of A8. Check continuity between the terminals.

OK:

Continuity

If there is no continuity, connect the ⊖ test lead to terminal 4 of A8 and the ⊕ lead to terminal 5 of A8. Recheck continuity between terminals.

NG → **Replace ABS control relay.**

OK

Check for open in harness and connector between DLC1 and ABS control relay and body ground (See page IN–27).

3	**Is DTC output?**

Check DTC on page DI–180.

YES → **Repair circuit indicated by code output.**

NO

4	**Does ABS warning light go off if short pin is removed?**

NO → **Check for short in harness and connector between warning light and DLC1 and ECU (See page IN–27).**

YES

5	**Check ABS control relay (See step 2).**

NG → **Replace ABS control relay.**

OK

Check for short in harness and connector between DLC1 and ABS control relay (See page IN–27).

DI13Y–03

Tc Terminal Circuit

CIRCUIT DESCRIPTION

Connecting terminals Tc and E_1 of the DLC1 causes the ECU to display the DTC by flashing the ABS warning light.

WIRING DIAGRAM

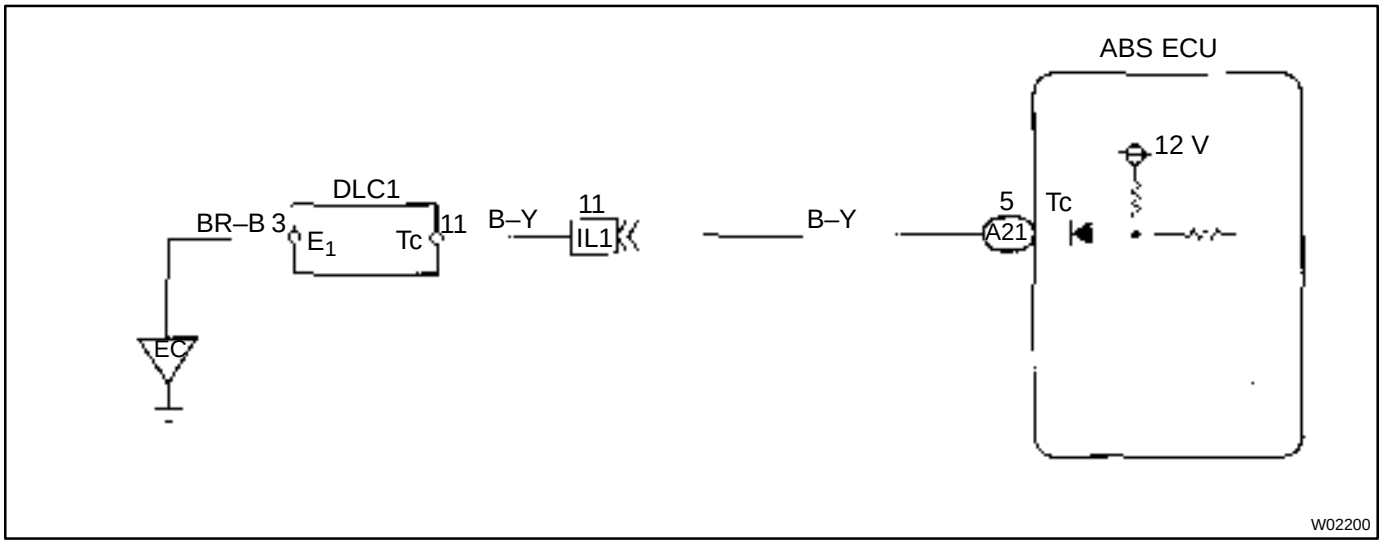

INSPECTION PROCEDURE

1	**Check voltage between terminals Tc and E_1 of DLC1.**

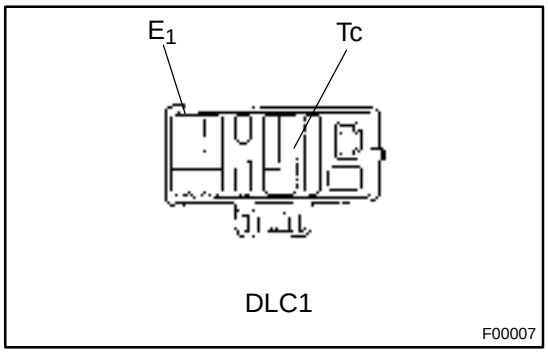

CHECK:

(a) Turn the ignition switch ON.

(b) Measure the voltage between terminals Tc and E_1 of DLC1.

OK:

Voltage: 10 – 14 V

OK → **If ABS warning light does not blink even after Tc and E_1 are connected, ECU may be defective.**

NG

2	**Check for open and short in harness and connector between ABS ECU and DLC1, DLC1 and body ground (See page IN–27).**

NG → **Repair or replace harness or connector.**

OK

Check and replace ABS ECU.

DI13Z–03

Ts Terminal Circuit

CIRCUIT DESCRIPTION

The sensor check circuit detects abnormalities in the speed sensor signal which cannot be detected with the DTC check.
Connecting terminals Ts and E_1 of the DLC1 in the engine compartment starts the check.

WIRING DIAGRAM

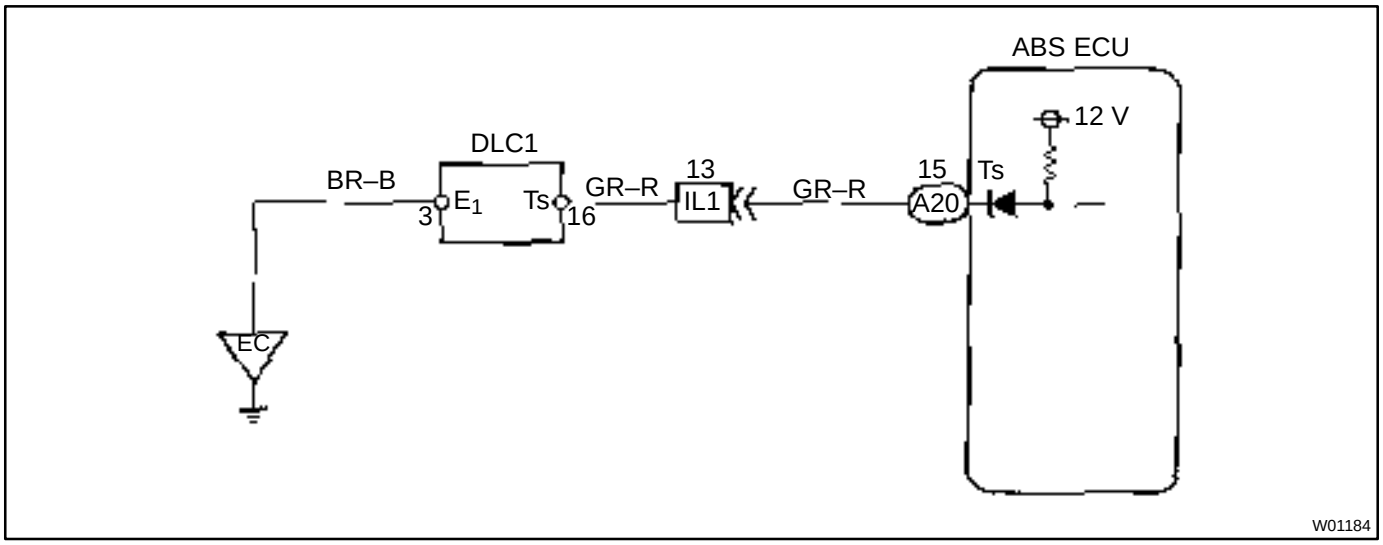

INSPECTION PROCEDURE

1	**Check voltage between terminals Ts and E_1 of DLC1.**

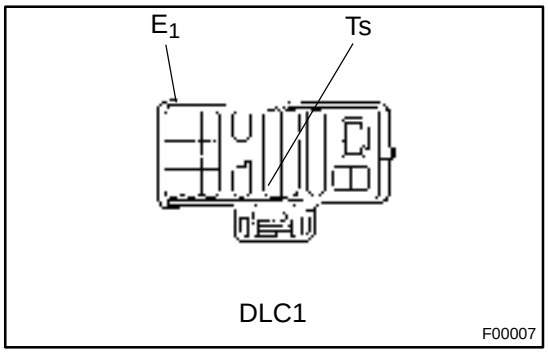

CHECK:

(a) Turn the ignition switch ON.

(b) Measure the voltage between terminals Ts and E_1 of DLC1.

OK:

Voltage: 10 – 14 V

OK → **If ABS warning light does not blink even after Ts and E_1 are connected, ECU may be defective.**

NG

2	**Check for open and short in harness and connector between ABS ECU and DLC1, DLC1 and body ground (See page IN–27).**

NG → **Repair or replace harness or connector.**

OK

Check and replace ABS ECU.

DI140–01

Check for fluid Leakage

Check for fluid leakage from actuator or hydraulic lines.

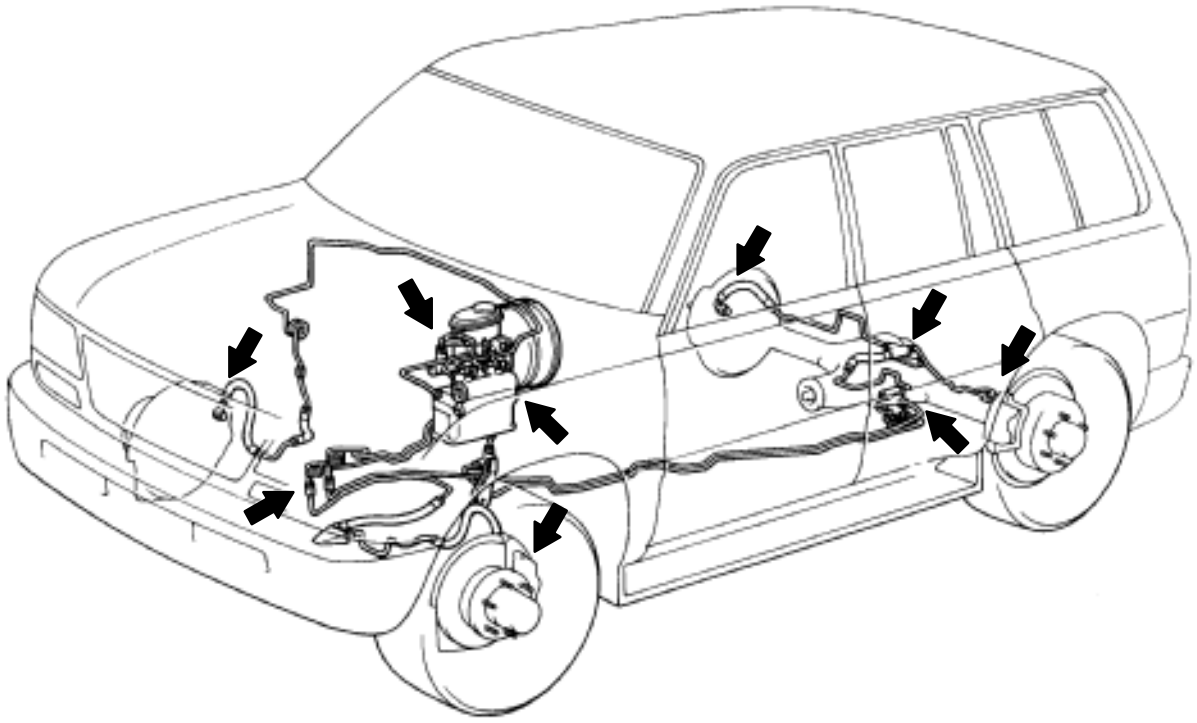

W02202

SUPPLEMENTAL RESTRAINT SYSTEM

DI5N0–02

HOW TO PROCEED WITH TROUBLESHOOTING

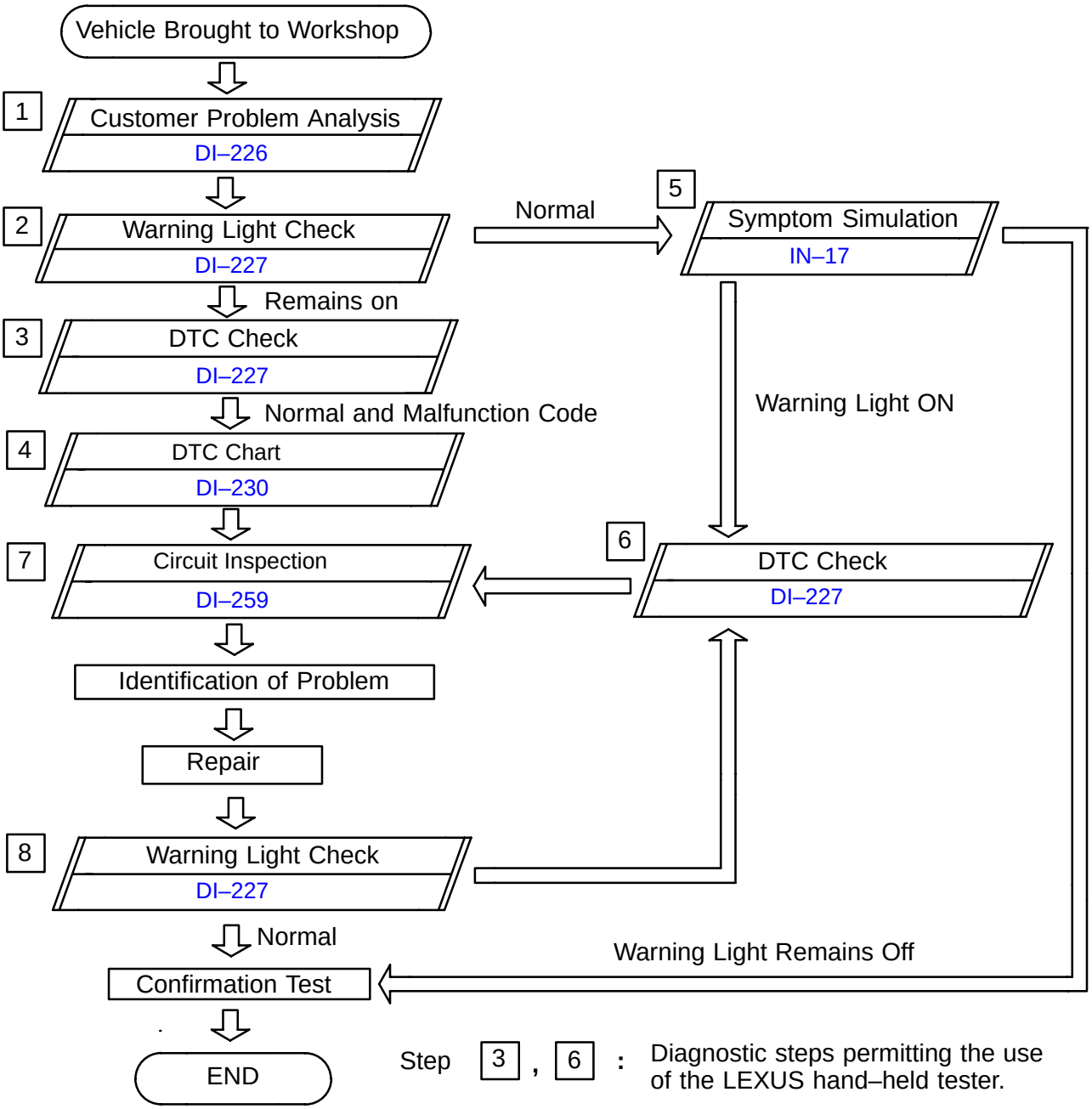

DI5N1–01

CUSTOMER PROBLEM ANALYSIS CHECK

Supplemental Restraint System Check Sheet

Inspector's Name _____

Customer's Name		**Registration No.**	
		Registration Year	/ /
		Frame No.	
Date Vehicle Brought In	/ /	**Odometer Reading**	km Miles

Date Problem Dist Occurred	/ /
Weather	☐ Fine ☐ Cloudy ☐ Rainy ☐ Snowy ☐ Other
Temperature	Approx.

Vehicle Operation	☐ Starting ☐ Idling ☐ Driving [☐ Constant speed ☐ Acceleration ☐ Deceleration ☐ Other]
Road Conditions	
Details Of Problem	

Vehicle Inspection, Repair History¿Prior to Occurrence of Malfunction(Including Supplemental Restraint System)	

Diagnosis System Inspection

SRS Warning Light Inspection	**1st Time**	☐ Remains ON ☐ Sometimes Light Up ☐ Does Not Light Up
	2nd Time	☐ Remains ON ☐ Sometimes Light Up ☐ Does Not Light Up
DTC Inspection	**1st Time**	☐ Normal Code ☐ Malfunction Code [Code.]
	2nd Time	☐ Normal Code ☐ Malfunction Code [Code.]

DI5N2–02

PRE–CHECK

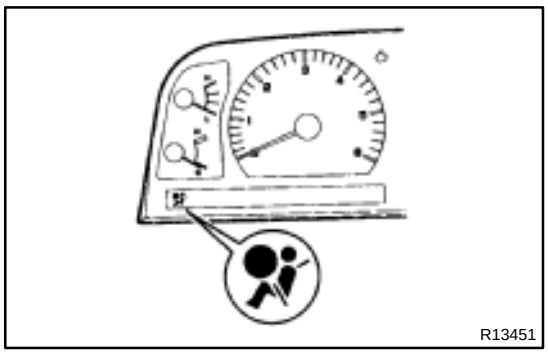

1. CHECK SRS WARNING LIGHT

(a) Turn the ignition switch to ACC or ON and check that the SRS warning light lights up.

(b) Check that the SRS warning light goes out after approx. 6 seconds.

HINT:

- When the ignition switch is at ACC or ON and the SRS warning light remains on or flashes, the airbag sensor assembly has detected a malfunction code.
- If, after approx. 6 seconds have elapsed, the SRS warning light sometimes lights up or the SRS warning light lights up even when the ignition switch is OFF, a short in the SRS warning light circuit can be considered likely. Proceed to ”SRS warning light system malfunction” on page DI–262, DI–264.

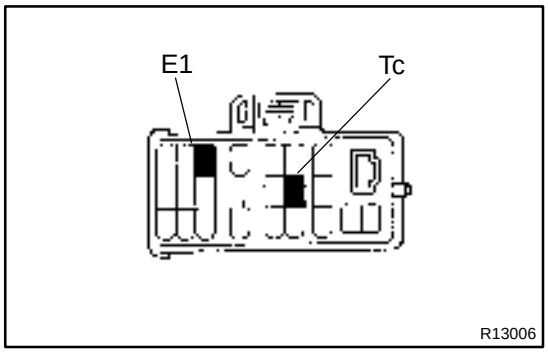

2. Using diagnosis check wire:
CHECK DTC

(a) Output the DTC.

(1) Turn the ignition switch to ACC or ON position and wait approx. 20 seconds.

(2) Using SST, connect terminals Tc and E1 of the DLC1.

SST 09843–18020

NOTICE:

Never make a mistake with the terminal connection position as this will cause a malfunction.

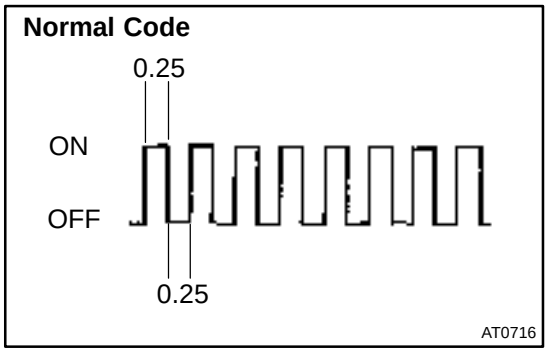

(b) Read the DTC.

Read the 2–digit DTC as indicated by the number of times the SRS warning light blinks. As an example, the blinking patterns, normal, 11 and 31 are as shown on the illustration.

- Normal code indication
  The light will blink 2 times per second.

- Malfunction code indication
  The first blinking output indicates the first digit of a 2–digit DTC. After a 1.5 second pause, the second blinking output will indicate the second digit.

Code 11 and 31

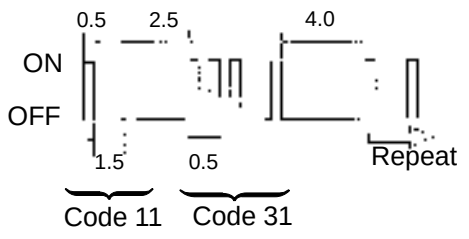

AB0056

If there are 2 or more codes, there will be a 2.5 second pause between each codes. After al the codes have been output, there will be a 4.0 second pause and they will all be repeated.
HINT:

- In the event of a number of trouble codes, indication will start from the smallest numbered code.
- If it does not output a DTC or outputs a DTC without terminal connection, proceed to the Tc terminal circuit inspection on page DI–267.

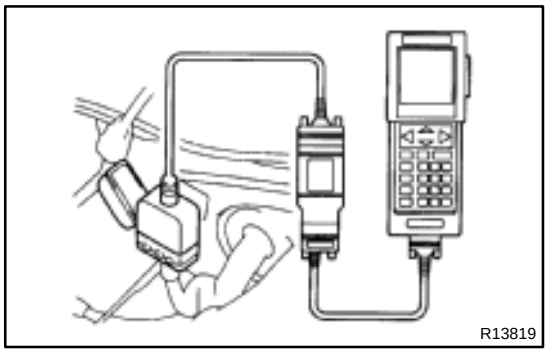

R13819

3. Using LEXUS hand–held tester:
CHECK DTC

(a) Hook up the LEXUS hand–held tester to the DLC1.
(b) Read the DTCs by following the prompts on the tester screen.

HINT:
Please refer to the LEXUS hand–held tester operator's manual, for further details.

4. Using diagnosis check wire:
CLEAR DTC

(a) Connect the 2 service wires to terminals Tc and AB of DLC1.
(b) Turn the ignition switch to ACC or ON and wait approx. 6 seconds.
(c) Starting with the Tc terminal, apply body ground alternately to terminal Tc and terminal AB twice each in cycles of 1.0 seconds. Confirm that body ground is absolute. Finally, keep applying body ground to terminal Tc.

HINT:
When alternately grounding terminals Tc and AB, release ground from one terminal and immediately apply it to the other terminal within an interval of 0.2 second. If DTCs do not clear, repeat the above procedure until the codes are cleared.

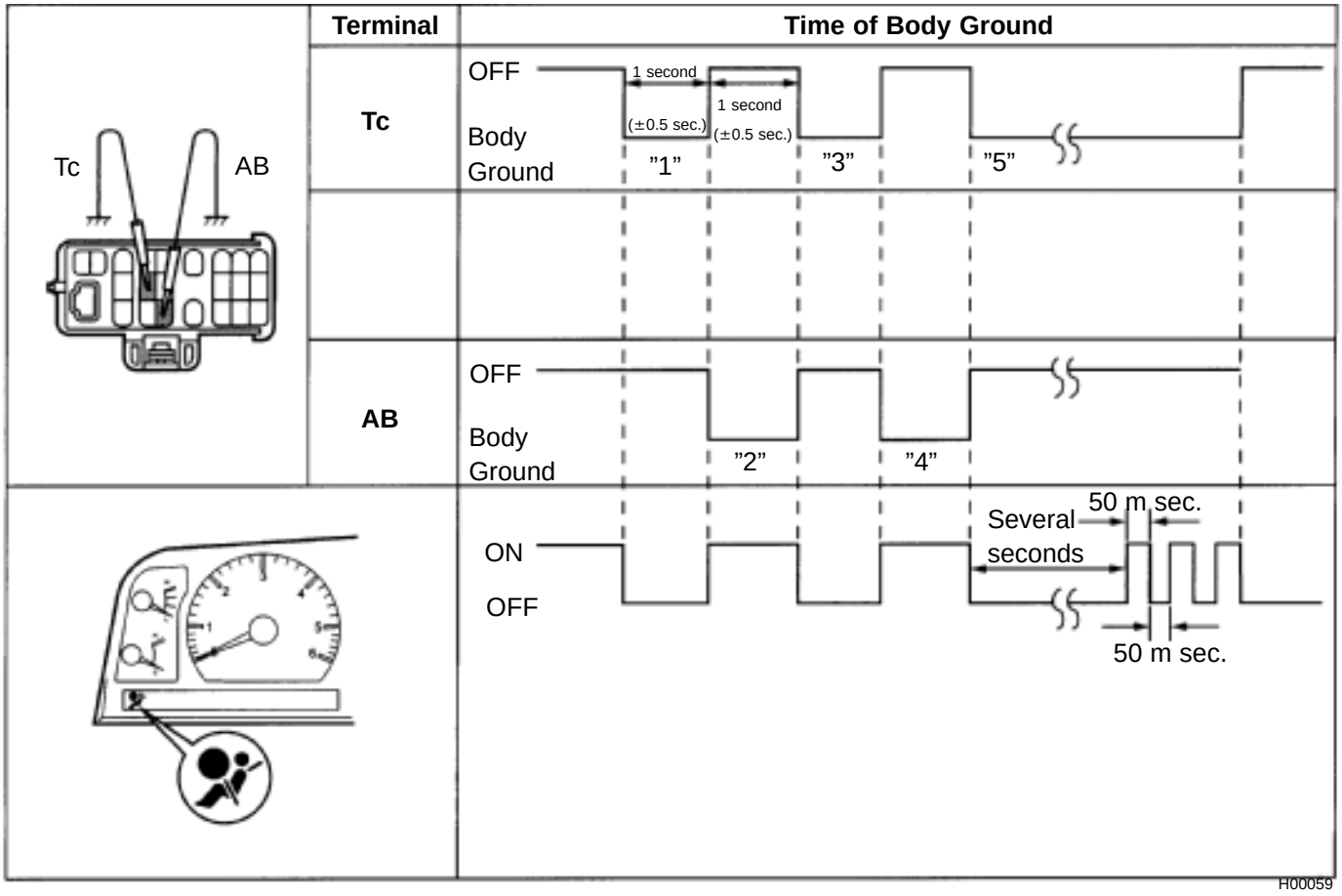

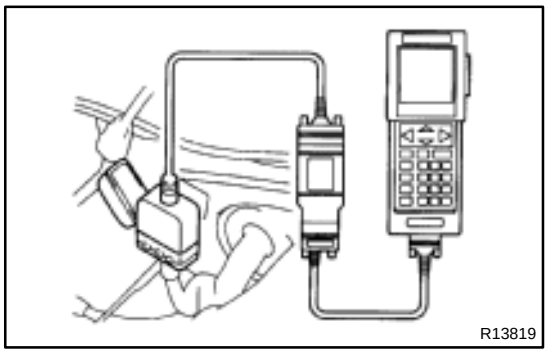

5. Using LEXUS hand–held tester:
CLEAR DTC

(a) Hook up the LEXUS hand–held tester to the DLC1.

(b) Clear the DTC by following the prompts on the tester screen.

HINT:
Please refer to the LEXUS hand–held tester operator’s manual for further details.

DI5N3–02

DIAGNOSTIC TROUBLE CODE CHART

If a malfunction code is displayed during the DTC check, check the circuit listed for that code in the table below (Proceed to the page given for that circuit.).

DTC No. (See Page)	Detection Item	Trouble Area	SRS Warning Light
Normal (DI–259)	• System normal	–	OFF
	• Source voltage drop	• Battery • Airbag sensor assembly	ON
11 (DI–234)	• Short in squib circuit (to ground)	• Steering wheel pad (D squib) • Front passenger airbag assembly (P squib) • Spiral cable • Airbag sensor assembly • Wire harness	ON
12 (DI–241)	• Short in squib circuit (to B+)	• Steering wheel pad (D squib) • Front passenger airbag assembly (P squib) • Spiral cable • Airbag sensor assembly • Wire harness	ON
14 (DI–248)	• Open in D squib circuit	• Steering wheel pad (D squib) • Spiral cable • Airbag sensor assembly • Wire harness	ON
31 (DI–253)	• Airbag sensor assembly malfunction	• Airbag sensor assembly	ON
54 (DI–255)	• Open in P squib circuit	• Front passenger airbag assembly (P squib) • Airbag sensor assembly • Wire harness	ON

HINT:

- When the SRS warning light remains lit up and the DTC is the normal code, this means a source voltage drop.
  This malfunction is not stored in memory by the airbag sensor assembly and if the power source voltage returns to normal, the SRS warning light will automatically go out.
- When 2 or more codes are indicated, the codes will be displayed in numeral order starting from the lowest numbered code.
- If a code not listed on the chart is displayed, the airbag sensor assembly is faulty.

DI5N4–02

PARTS LOCATION

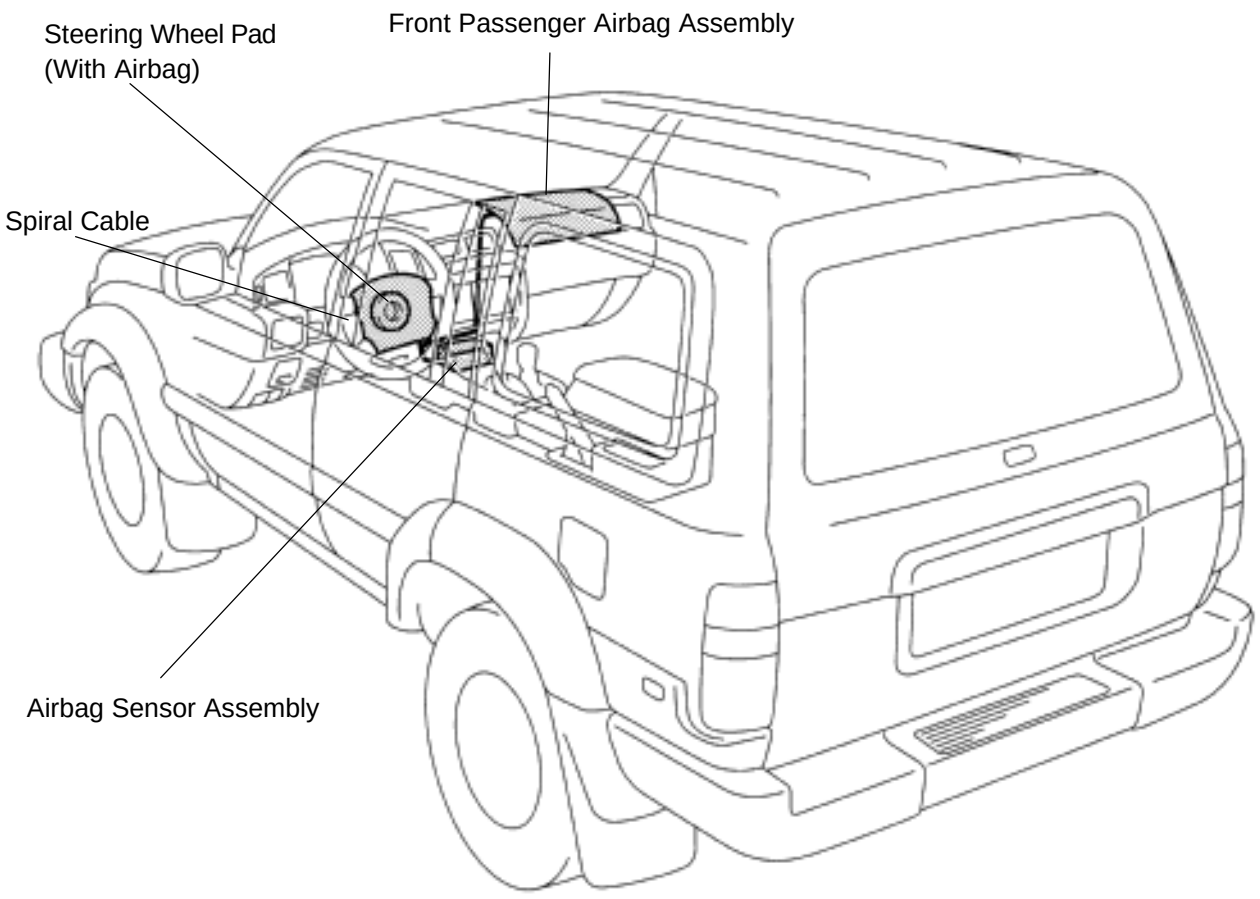

W03495

DI5N5–02

TERMINALS OF ECM

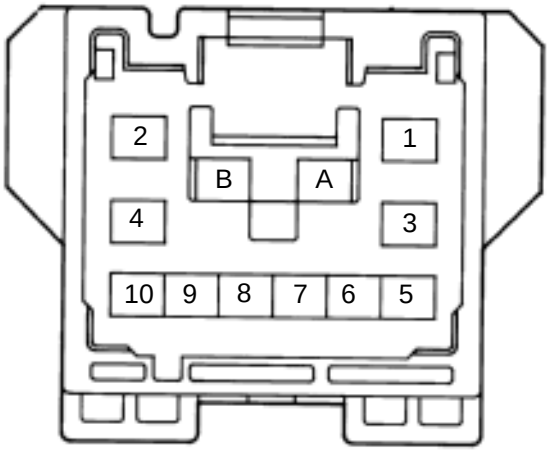

W02056

No.	Symbol	Terminal Name
A	–	Electrical Connection Check Mechanism
B	–	Electrical Connection Check Mechanism
1	P–	Squib ⊖ (Passenger)
2	P+	Squib ⊕ (Passenger)
3	D–	Squib ⊖ (Driver)
4	D+	Squib ⊕ (Driver)
5	E1	Ground
6	E2	Ground
7	Tc	Diagnosis
8	LA	SRS Warning Light
9	IG2	Power Source (IGN Fuse)
10	ACC	Power Source (CIG Fuse)

DI5N6–01

PROBLEM SYMPTOMS TABLE

Proceed with troubleshooting of each circuit in the table below.

Symptom	Suspect Area	See page
• With the ignition switch at ACC or ON, the SRS warning light sometimes lights up after approx. 6 seconds have elapsed. • SRS warning light is always lit up even when ignition switch is in the LOCK position.	• SRS warning light circuit (Always lit up when ignition switch is in LOCK position.)	DI–262
• With the ignition switch at ACC or ON, the SRS warning lights does not light up.	• SRS warning light circuit (Does not light up when ignition switch is turned to ACC or ON.)	DI–264
• DTC not displayed. • SRS warning light is always lit up a DTC check procedure. • DTC displayed without Tc and E1 terminal connection.	• Tc terminal circuit	DI–267

DI5N7–02

CIRCUIT INSPECTION

DTC	11	Short in Squib Circuit (to Ground)

CIRCUIT DESCRIPTION

The squib circuit consists of the airbag sensor assembly, spiral cable, steering wheel pad and front passenger airbag assembly. If causes the SRS to deploy when the SRS deployment conditions are satisfied.
For details of the function of each component, see FUNCTION OF COMPONENTS on page RS–2.
DTC 11 is recorded when ground short is detected in the squib circuit.

DTC No.	DTC Detection Condition	Trouble Area
11	• Short circuit in squib wire harness (to ground) • Squib malfunction • Spiral cable malfunction • Airbag sensor assembly malfunction	• Steering wheel pad (D squib) • Front passenger airbag assembly (P squib) • Spiral cable • Airbag sensor assembly • Wire harness

WIRING DIAGRAM

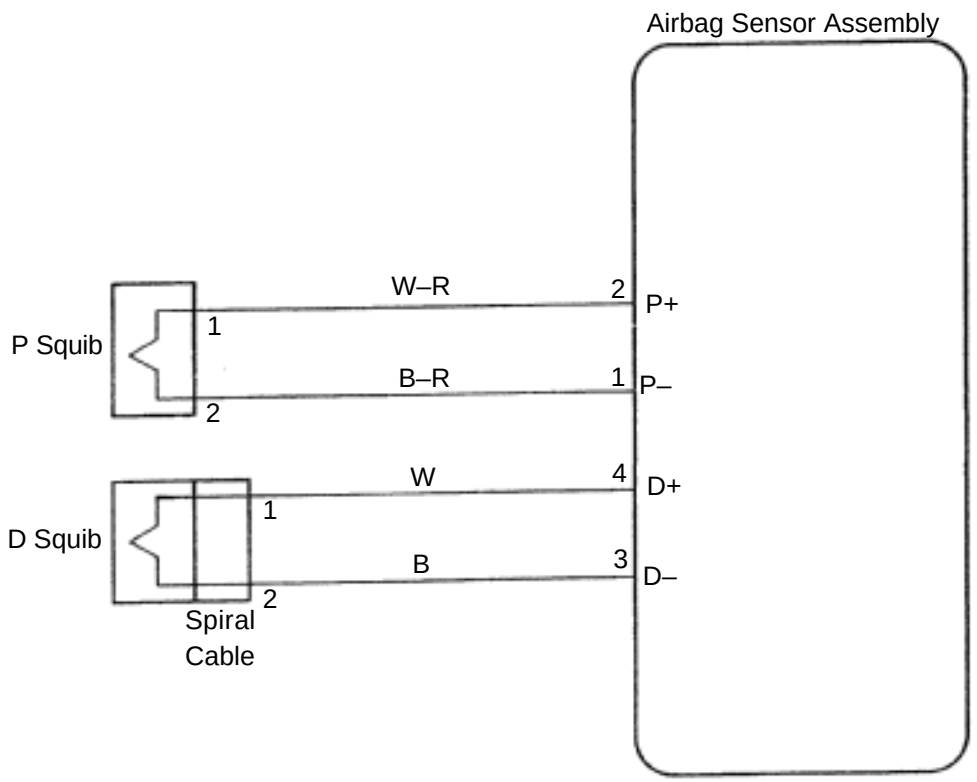

R16017

INSPECTION PROCEDURE

1	**Preparation (See step 1 on page DI–259).**

2	**Check D squib circuit.**

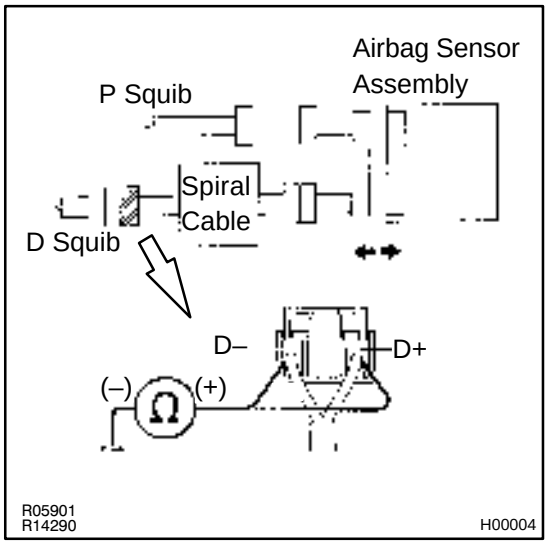

CHECK:

For the connector (on the spiral cable side) between the spiral cable and steering wheel pad, measure the resistance between D+, D– and body ground.

OK:

Resistance: 1MΩ or Higher

NG → **Go to step 7.**

OK

3	**Check P squib circuit.**

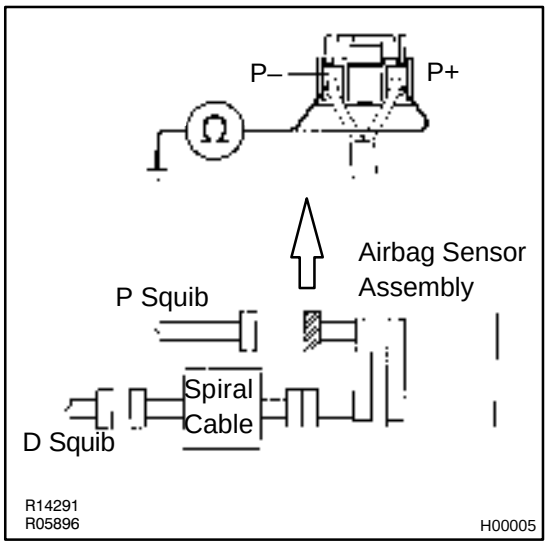

CHECK:

For the connector (on the airbag sensor assembly side) between the airbag sensor assembly and front passenger airbag assembly, measure the resistance between P+, P– and body ground.

OK:

Resistance: 1MΩ or Higher

NG → **Repair or replace harness or connector between the airbag sensor assembly and front passenger airbag assembly.**

OK

4	**Check airbag sensor assembly.**

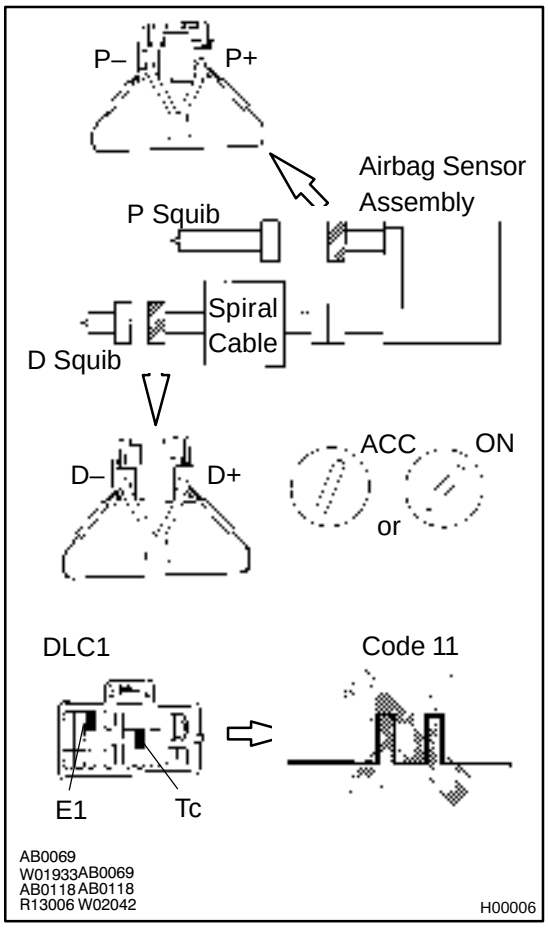

PREPARATION:

(a) Connect connector to airbag sensor assembly.

(b) Using a service wire connect D+ and D– on spiral cable side of connector between spiral cable and steering wheel pad.

(c) Using a service wire, connect P+ and P– on airbag sensor assembly side of connector between airbag sensor assembly and front passenger airbag assembly.

(d) Connect negative (–) terminal cable to battery, and wait at least 2 seconds.

CHECK:

(a) Turn ignition switch to ACC or ON and wait at least 20 seconds.

(b) Clear malfunction code stored in memory (See page DI–227).

(c) Turn ignition switch to LOCK, and wait at least 20 seconds.

(d) Turn ignition switch to ACC or ON, and wait at least 20 seconds.

(e) Using SST, connect terminals Tc and E1 of DLC1.
SST 09843–18020

(f) Check DTC

OK:

DTC 11 is not output.

HINT:
Codes other than code 11 may be output at this time, but they are not relevant to this check.

NG	**Replace airbag sensor assembly.**

OK

5	**Check D squib.**

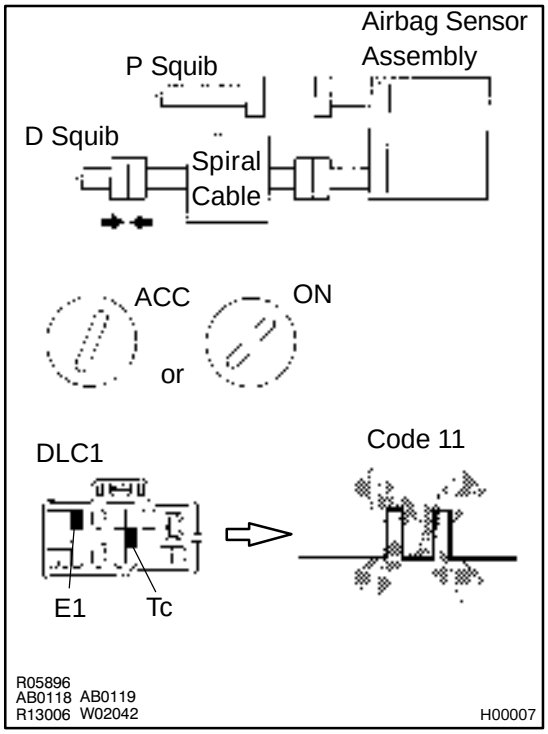

PREPARATION:

(a) Turn ignition switch to LOCK.
(b) Disconnect negative (–) terminal cable from the battery, and wait at least 90 seconds.
(c) Connect steering wheel pad connector.
(d) Connect negative (–) terminal cable to battery, and wait at least 2 seconds.

CHECK:

(a) Turn ignition switch to ACC or ON, and wait at least 20 seconds.
(b) Clear malfunction code stored in memory (See page DI–227).
(c) Turn ignition switch to LOCK, and wait at least 20 seconds.
(d) Turn ignition switch to ACC or ON, and wait at least 20 seconds.
(e) Using SST, connect terminals Tc and E1 of DLC1.
SST 09843–18020
(f) Check DTC.

OK:

DTC 11 is not output.

HINT:
Codes other than code 11 may be output at this time, but they are not relevant to this check.

NG → **Replace steering wheel pad.**

OK

6	**Check P squib.**

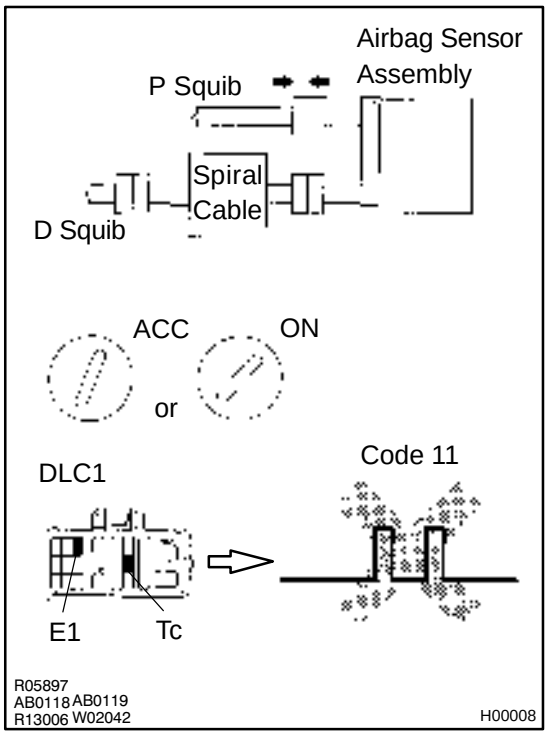

PREPARATION:

(a) Turn ignition switch to LOCK.

(b) Disconnect negative (–) terminal cable from the battery, and wait at least 90 seconds.

(c) Connect front passenger airbag assembly connector.

(d) Connect negative (–) terminal cable to battery, and wait at least 2 seconds.

CHECK:

(a) Turn ignition switch to ACC or ON, and wait at least 20 seconds.

(b) Clear malfunction code stored in memory (See page DI–227).

(c) Turn ignition switch to LOCK, and wait at least 20 seconds.

(d) Turn ignition switch to ACC or ON, and wait at least 20 seconds.

(e) Using SST, connect terminals Tc and E1 of DLC1.
SST 09843–18020

(f) Check DTC.

OK:

DTC 11 is not output.

HINT:
Codes other than code 11 may be output at this time, but they are not relevant to this check.

NG → **Replace front passenger airbag assembly.**

OK

From the results of the above inspection, the malfunctioning part can now be considered normal. To make sure of this, use the simulation method to check. If the malfunctioning part can not be detected by the simulation method, replace all SRS components including the wire harness.

7	**Check spiral cable.**

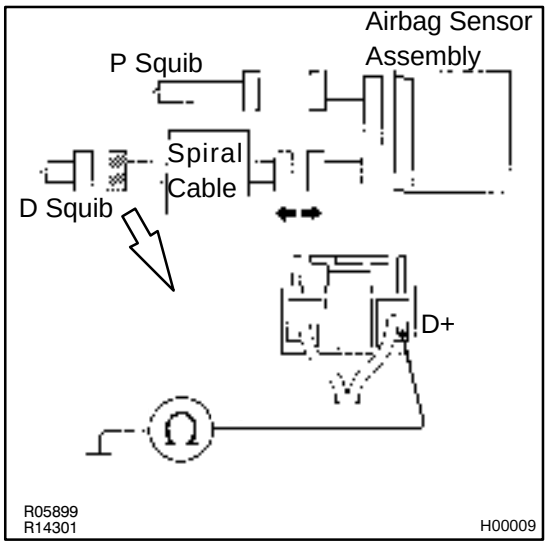

PREPARATION:

Disconnect connector between airbag sensor assembly and spiral cable.

CHECK:

Measure resistance between D+ on spiral cable side of connector between spiral cable and steering wheel pad and body ground.

OK:

Resistance: 1MΩ or Higher

NG → **Repair or replace spiral cable.**

OK

Repair or replace harness or connector between airbag sensor assembly and spiral cable.

DI5N8–02

DTC	12	Short in Squib Circuit (to B+)

CIRCUIT DESCRIPTION

The squib circuit consists of the airbag sensor assembly, spiral cable, steering wheel pad and front passenger airbag assembly. It causes the SRS to deploy when the SRS deployment conditions are satisfied.
For details of the function of each components, see page FUNCTION OF COMPONENTS on page RS–2.
DTC 12 is recorded when a B+ short is detected in the squib circuit.

DTC No.	DTC Detection Condition	Trouble Area
12	• Short circuit in squib wire harness (to B+) • Squib malfunction • Spiral cable malfunction • Airbag sensor assembly malfunction	• Steering wheel pad (D squib) • Front passenger airbag assembly (P squib) • Spiral cable • Airbag sensor assembly • Wire harness

WIRING DIAGRAM

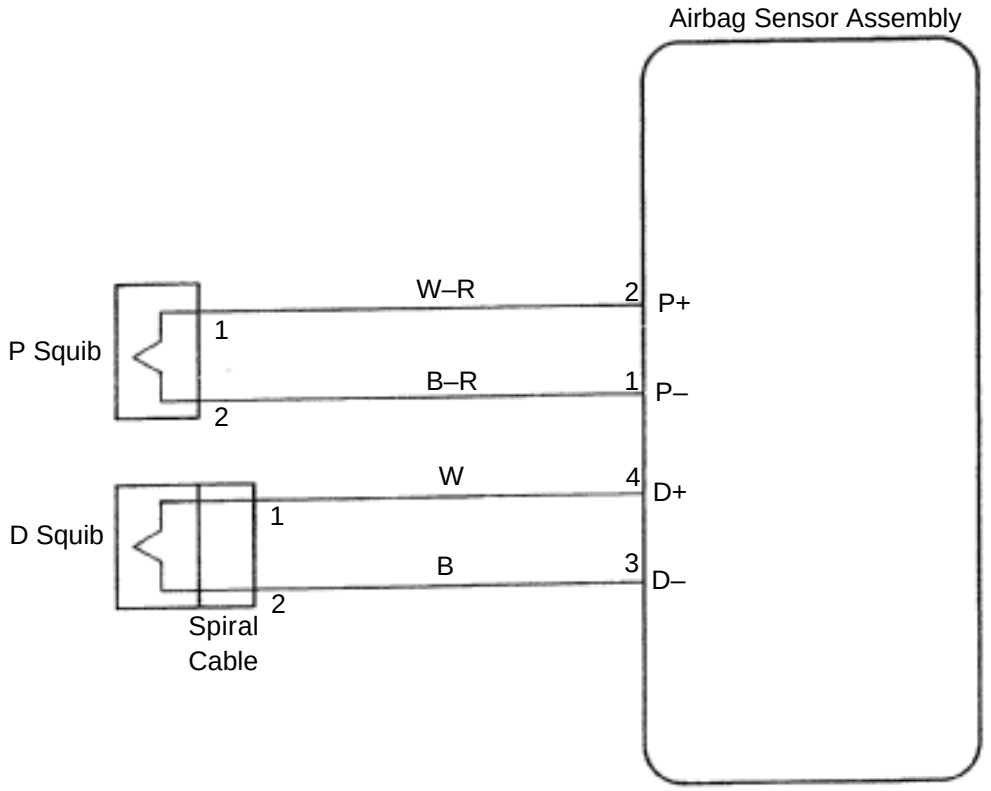

R16017

INSPECTION PROCEDURE

1	**Preparation (See step 1 on page DI–259).**

2	**Check D squib circuit.**

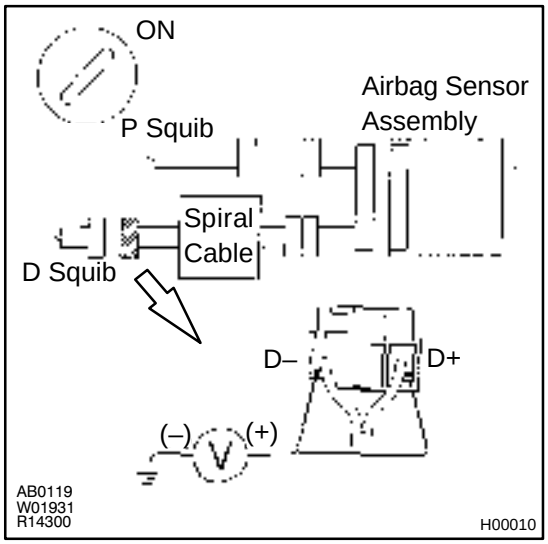

CHECK:

For the connector (on the spiral cable side) between the spiral cable and steering wheel pad, measure the voltage between D+, D– and body ground.

OK:

Voltage: 0 V

NG → **Go to step 7.**

OK

3	**Check P squib circuit.**

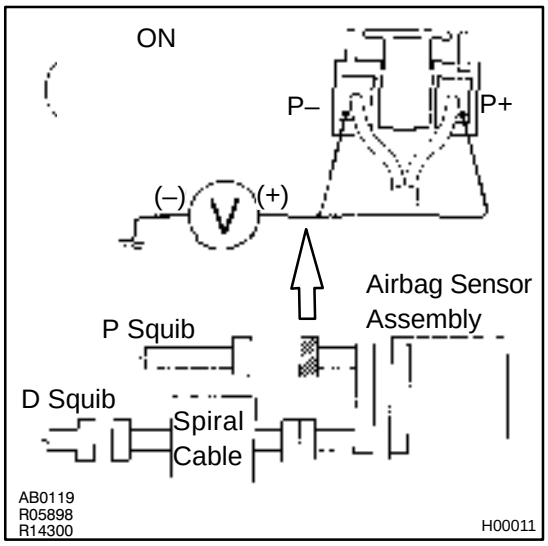

CHECK:

For the connector (on the airbag sensor assembly side) between airbag sensor assembly and front passenger airbag assembly, measure the voltage between P+, P– and body ground.

OK:

Voltage: 0 V

NG → **Repair or replace harness or connector between the airbag sensor assembly and front passenger airbag assembly.**

OK

4	**Check airbag sensor assembly.**

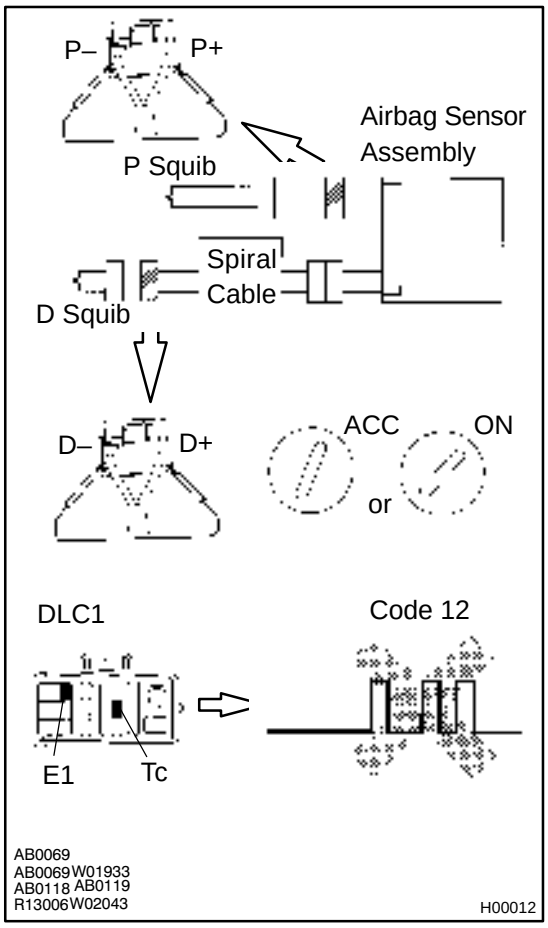

PREPARATION:

(a) Connect connector to airbag sensor assembly.

(b) Using a service wire, connect D+, and D– on spiral cable side of connector between spiral cable and steering wheel pad.

(c) Using a service wire, connect P+, and P– on airbag sensor assembly side of connector between airbag sensor assembly and front passenger airbag assembly.

(d) Connect negative (–) terminal cable to battery, and wait at least 2 seconds.

CHECK:

(a) Turn ignition switch to ACC or ON and wait at least 20 seconds.

(b) Clear malfunction code stored in memory
(See page DI–227).

(c) Turn ignition switch to LOCK, and wait at least 20 seconds.

(d) Turn ignition switch to ACC or ON, and wait at least 20 seconds.

(e) Using SST, connect terminals Tc and E1 of DLC1.
SST 09843–18020

(f) Check DTC.

OK:

DTC 12 is not output.

HINT:
Codes other than code 12 may be output at this time, but they are not relevant to this check.

NG	**Replace airbag sensor assembly.**

OK

5	**Check D squib.**

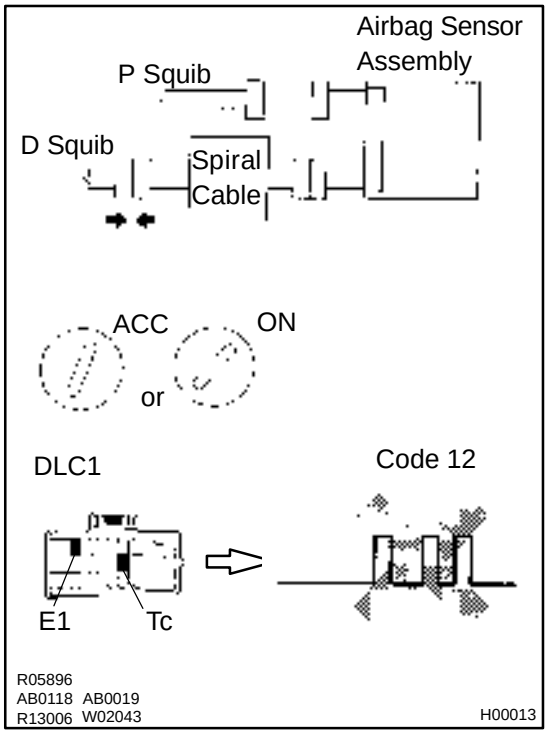

PREPARATION:

(a) Turn ignition switch to LOCK.
(b) Disconnect negative (–) terminal cable from the battery, and wait at least 90 seconds.
(c) Connect steering wheel pad connector.
(d) Connect negative (–) terminal cable to battery, and wait at least 2 seconds.

CHECK:

(a) Turn ignition switch to ACC or ON, and wait at least 20 seconds.
(b) Clear malfunction code stored in memory (See page DI–227).
(c) Turn ignition switch to LOCK, and wait at least 20 seconds.
(d) Turn ignition switch to ACC or ON, and wait at least 20 seconds.
(e) Using SST, connect terminals Tc and E1 of DLC1.
SST 09843–18020
(f) Check DTC.

OK:

DTC 12 is not output.

HINT:
Codes other than code 12 may be output at this time. but they are not relevant to this check.

NG	**Replace steering wheel pad.**

OK

6	**Check P squib.**

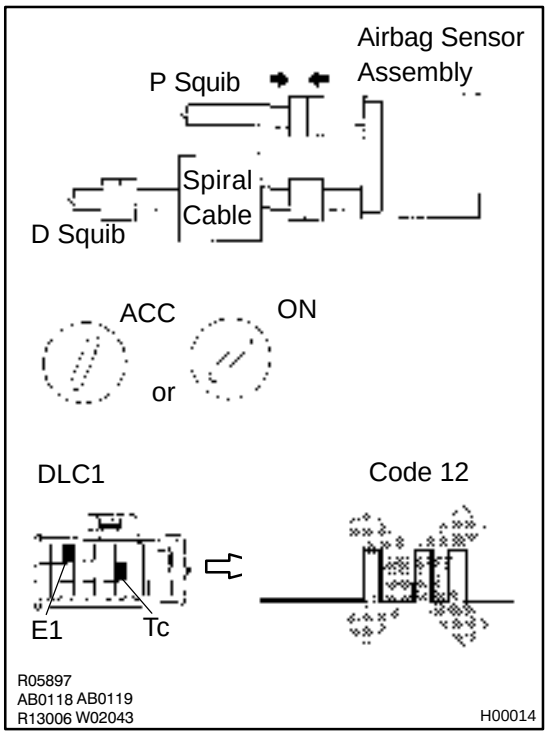

PREPARATION:

(a) Turn ignition switch to LOCK.
(b) Disconnect negative (–) terminal cable from the battery, and wait at least 90 seconds.
(c) Connect front passenger airbag assembly connector.
(d) Connect negative (–) terminal cable to battery, and wait at least 2 seconds.

CHECK:

(a) Turn ignition switch to ACC or ON, and wait at least 20 seconds.
(b) Clear malfunction code stored in memory (See page DI–227).
(c) Turn ignition switch to LOCK, and wait at least 20 seconds.
(d) Turn ignition switch to ACC or ON, and wait at least 20 seconds.
(e) Using SST, connect terminals Tc and E1 of DLC1.
SST 09843–18020
(f) Check DTC.

OK:

DTC 12 is not output.

HINT:
Codes other than code 12 may be output at this time, but they are not relevant to this check.

NG	**Replace front passenger airbag assembly.**

OK

From the results of the above inspection, the malfunctioning part can now be considered normal. To make sure of this, use the simulation method to check.

7	**Check spiral cable.**

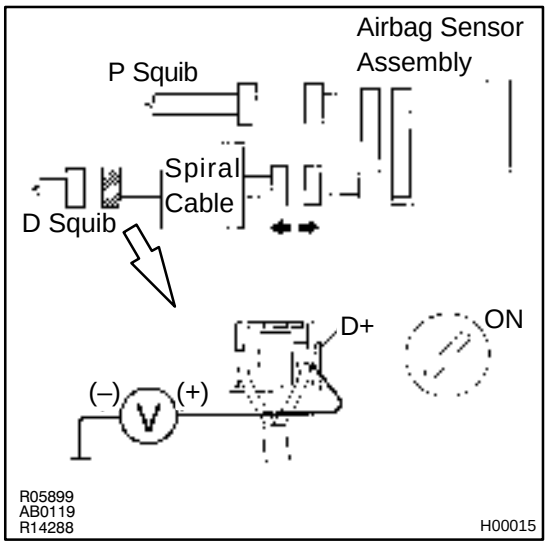

PREPARATION:

(a) Turn ignition switch to LOCK.

(b) Disconnect connector between airbag sensor assembly and spiral cable.

(c) Turn ignition switch ON.

CHECK:

Measure voltage at D+ on spiral cable side of connector between spiral cable and steering wheel pad and body ground.

OK:

Voltage: 0 V

NG → **Repair or replace spiral cable.**

OK

Repair or replace harness or connector between airbag sensor assembly and spiral cable.

DI5N9–02

DTC	14	Open in D Squib Circuit

CIRCUIT DESCRIPTION

The D squib circuit consists of the airbag sensor assembly, spiral cable and steering wheel pad. It causes the airbag to deploy when the airbag deployment conditions are satisfied.
For details of the function of each components, see FUNCTION OF COMPONENTS on page RS–2.
DTC 14 is recorded when an open is detected in the D squib circuit.

DTC No.	DTC Detection Condition	Trouble Area
14	• Open circuit in D+ wire harness or D– wire harness of squib • D squib malfunction • Spiral cable malfunction • Airbag sensor assembly malfunction	• Steering wheel pad (D squib) • Spiral cable • Airbag sensor assembly • Wire harness

WIRING DIAGRAM

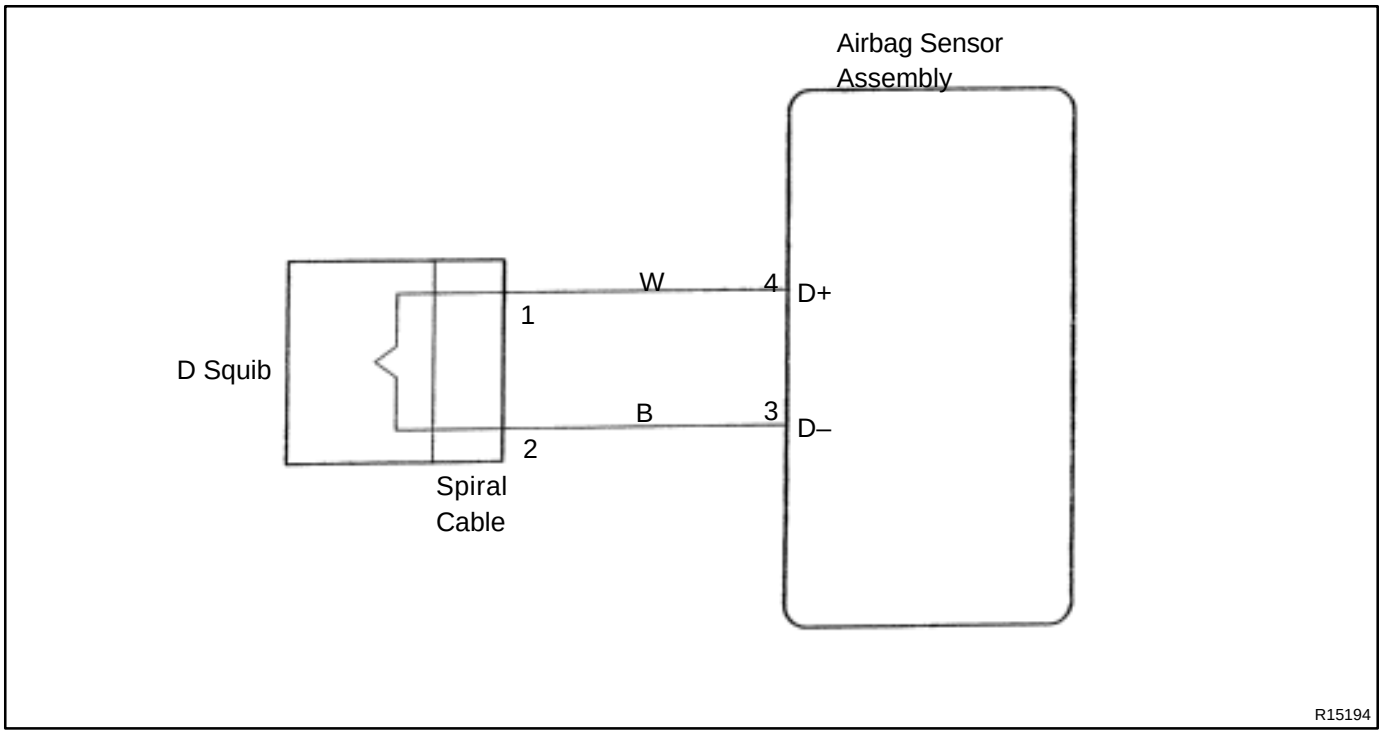

INSPECTION PROCEDURE

1	**Preparation (See step 1 on page DI–259).**

2	**Check D squib circuit.**

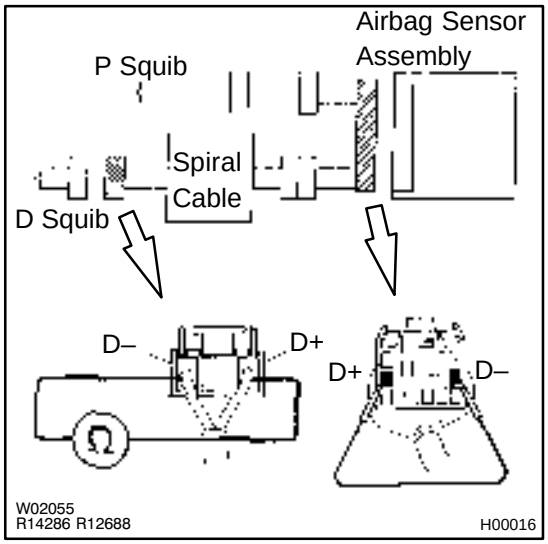

PREPARATION:
Using a service wire, connect D+ and D– on airbag sensor assembly connector.

CHECK:
For the connector (on the spiral cable side) between the spiral cable and steering wheel pad, measure the resistance between D+ and D–.

OK:

Resistance: Below 1 Ω

NG → **Go to step 5.**

OK

3	**Check airbag sensor assembly.**

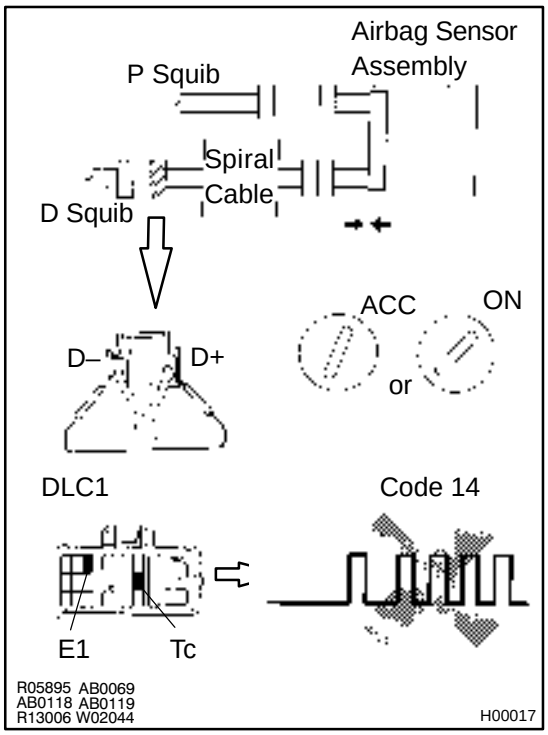

PREPARATION:

(a) Connect connector to airbag sensor assembly.

(b) Using a service wire, connect D+ and D– on spiral cable side of connector between spiral cable and steering wheel pad.

(c) Connect negative (–) terminal cable to battery, and wait at least 2 seconds.

CHECK:

(a) Turn ignition switch to ACC or ON and wait at least 20 seconds.

(b) Clear malfunction code stored in memory (See page DI–227).

(c) Turn ignition switch to LOCK, and wait at least 20 seconds.

(d) Turn ignition switch to ACC or ON, and wait at least 20 seconds.

(e) Using SST, connect terminals Tc and E1 of DLC1.
SST 09843–18020

(f) Check DTC.

OK:

DTC 14 is not output.

HINT:
Codes other than code 14 may be output at this time, but they are relevant to this check.

NG → **Replace airbag sensor assembly.**

OK

4	**Check D squib.**

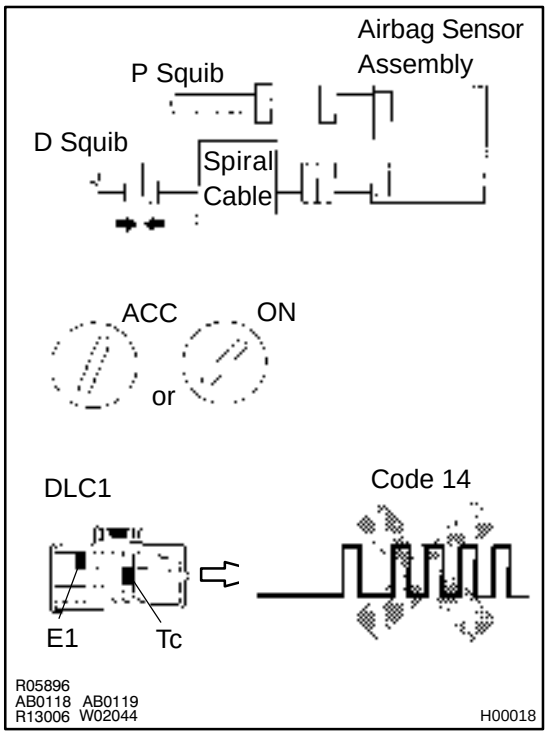

PREPARATION:

(a) Turn ignition switch to LOCK.
(b) Disconnect negative (–) terminal cable from the battery, and wait at least 90 seconds.
(c) Connect steering wheel pad connector.
(d) Connect negative (–) terminal cable to battery,and wait at least 2 seconds.

CHECK:

(a) Turn ignition switch to ACC or ON, and wait at least 20 seconds.
(b) Clear malfunction code stored in memory (See page DI–227).
(c) Turn ignition switch to LOCK, and wait at least 20 seconds.
(d) Turn ignition switch to ACC or ON, and wait at least 20 seconds.
(e) Using SST, connect terminals Tc and E1 of DLC1.
SST 09843–18020
(f) Check DTC.

OK:

DTC 14 is not output.

HINT:
Codes other than code 14 may be output at this time, but they are not relevant to this check.

NG	**Replace steering wheel pad.**

OK

From the results of the above inspection, the malfunctioning part can now be considered normal. To make sure of this, use the simulation method to check.

5	**Check spiral cable.**

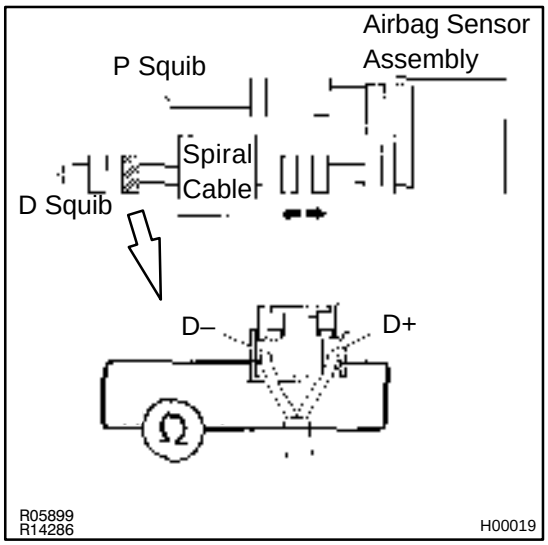

PREPARATION:
Disconnect connector between airbag sensor assembly and spiral cable.
CHECK:
For the connector (on the spiral cable side) between the spiral cable and steering wheel pad, measure the resistance D+ and D–.
OK:
Resistance: Below 1 Ω

NG → **Repair or replace spiral cable.**

OK

6	**Check harness between airbag sensor assembly and spiral cable.**

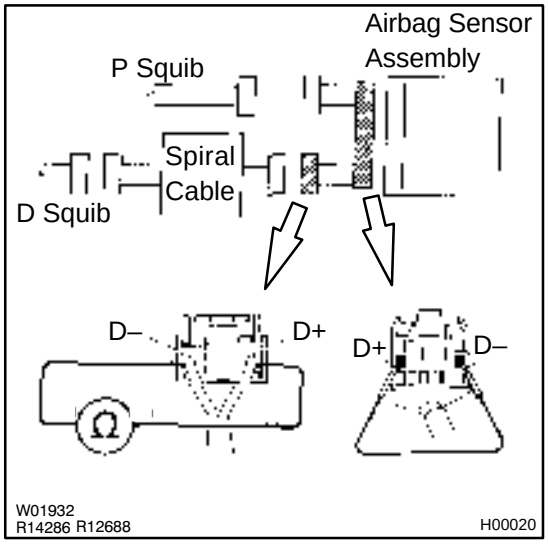

PREPARATION:
Using a service wire, connect D+ and D– on airbag sensor assembly connector.
CHECK:
For the connector (on the airbag sensor assembly side) between the airbag sensor assembly and spiral cable, measure the resistance D+ and D–.
OK:
Resistance: Below 1 Ω

NG → **Repair or replace harness or connector between airbag sensor assembly and spiral cable.**

OK

From the results of the above inspection, the malfunctioning part can now be considered normal. To make sure of this, use the simulation method to check.

DI5NA–02

DTC	31	Airbag Sensor Assembly Malfunction

CIRCUIT DESCRIPTION

The airbag sensor assembly consists of a airbag sensor, safing sensor, drive circuit, diagnosis circuit and ignition control, etc.
It receives signals from the airbag sensors, judges whether or not the SRS must be activated, and diagnosis system malfunction.
DTC 31 is recorded when occurrence of a malfunction in the airbag sensor assembly is detected.

DTC No.	DTC Detection Condition	Trouble Area
31	• Airbag sensor assembly malfunction	• Airbag sensor assembly

INSPECTION PROCEDURE

HINT:
When a malfunction code other than code 31 is displayed at the same time, first repair the malfunction indicated by the malfunction code other than code 31.

1	**Preparation (See step 1 on page DI–259).**

2	**Check voltage at IG2 and ACC of airbag sensor assembly**

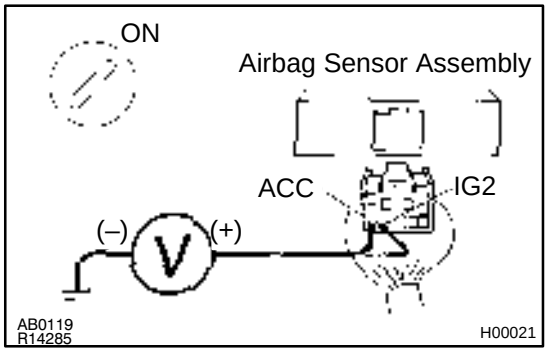

PREPARATION:
Turn ignition switch ON.
CHECK:
Measure voltage between terminals IG2 and ACC of airbag sensor assembly and body ground.
OK:
Voltage: Below 16 V

NG → **Check battery and charging system (See page CH–1).**

OK

3	**Is DTC 31 output again?**

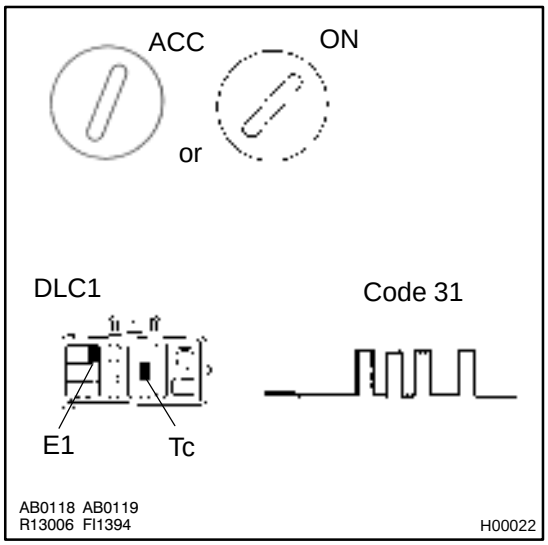

PREPARATION:

Clear malfunction code.

CHECK:

(a) Turn ignition switch to LOCK, and wait at least 20 seconds.

(b) Turn ignition switch to ACC or ON, and wait at least 20 seconds.

(c) Repeat operation in step (a) and (b) at least 5 times.

(d) Using SST, connect terminals Tc and E1 of DLC1.
SST 09843–18020

(e) Check DTC.

NO → **Using simulation method, reproduce malfunction symptoms (See page IN–17).**

YES ↓

Replace airbag sensor assembly.

DI5NB–02

DTC	54	Open in P Squib Circuit

CIRCUIT DESCRIPTION

The P squib circuit consists of the airbag sensor assembly and front passenger airbag assembly. It causes the airbag to deploy when the airbag deployment conditions are satisfied.
For details of the function of each components, see FUNCTION OF COMPONENTS on page RS–2.
DTC 54 is recorded when an open is detected in the P squib circuit.

DTC No.	DTC Detection Condition	Trouble Area
54	• Open circuit in P+ wire harness or P– wire harness of squib • P squib malfunction • Airbag sensor assembly malfunction	• Front passenger airbag assembly (P squib) • Airbag sensor assembly • Wire harness

WIRING DIAGRAM

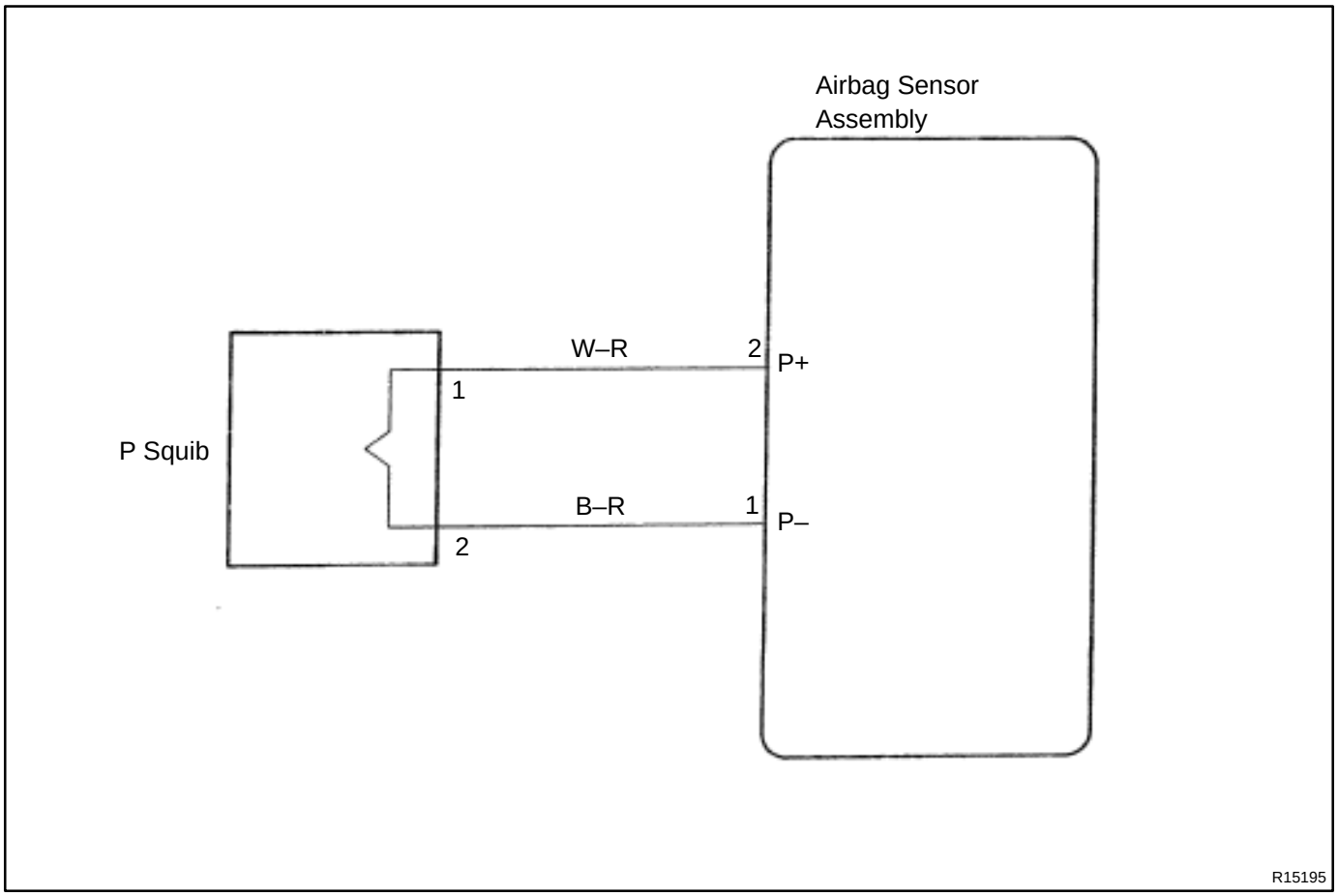

INSPECTION PROCEDURE

1	**Preparation (See step 1 on page DI–259).**

2	**Check P squib circuit.**

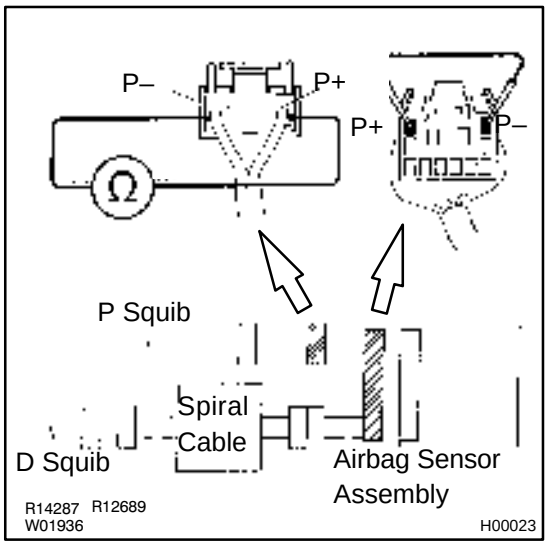

PREPARATION:

Using a service wire, connect P+ and P– on airbag sensor assembly connector.

CHECK:

For the connector (on the airbag sensor assembly side) between the airbag sensor assembly and front passenger airbag assembly measure the resistance between P+ and P–.

OK:

Resistance: Below 1 Ω

NG → **Repair or replace harness or connector between airbag sensor assembly and front passenger airbag assembly.**

OK

3	**Check airbag sensor assembly.**

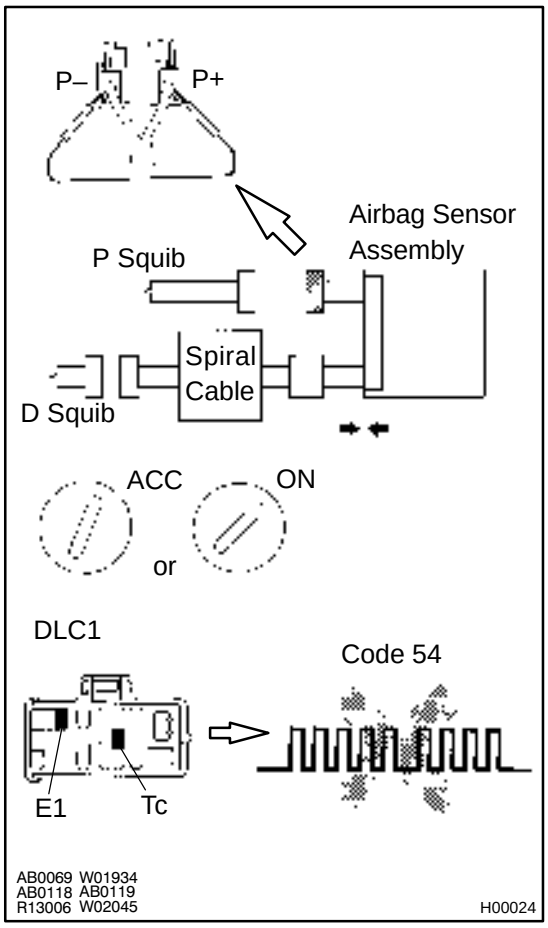

PREPARATION:

(a) Connect connector to airbag sensor assembly.

(b) Using a service wire, connect P+ and P– on airbag sensor assembly side of connector between airbag sensor assembly and front passenger airbag assembly.

(c) Connect negative (–) terminal cable to battery, and wait at least 2 seconds.

CHECK:

(a) Turn ignition switch to ACC or ON and wait at least 20 seconds.

(b) Clear malfunction code stored in memory (See page DI–227).

(c) Turn ignition switch to LOCK, and wait at least 20 seconds.

(d) Turn ignition switch to ACC or ON, and wait at least 20 seconds.

(e) Using SST, connect terminal Tc and E1 of DLC1.
SST 09843–18020

(f) Check DTC.

OK:

DTC 54 is not output.

HINT:
Codes other than code 54 may be output at this time, but they are not relevant to this check.

NG → **Replace airbag sensor assembly.**

OK

4	**Check P squib.**

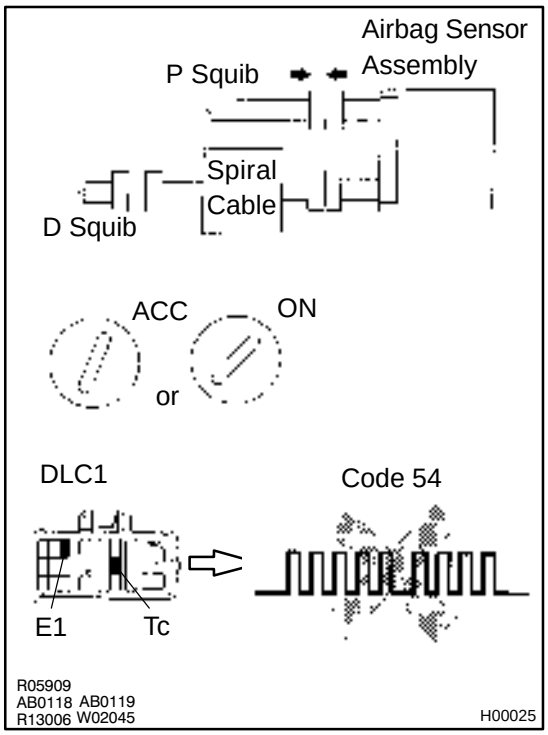

PREPARATION:

(a) Turn ignition switch to LOCK.
(b) Disconnect negative (–) terminal cable from the battery, and wait at least 90 seconds.
(c) Connect front passenger airbag assembly connector.
(d) Connect negative (–) terminal cable to battery, and wait at least 2 seconds.

CHECK:

(a) Turn ignition switch to ACC or ON and wait at least 20 seconds.
(b) Clear malfunction code stored in memory (See page DI–227).
(c) Turn ignition switch to LOCK, and wait at least 20 seconds.
(d) Turn ignition switch to ACC or ON, and wait at least 20 seconds.
(e) Using SST, connect terminal Tc and E1 of DLC1.
SST 09843–18020
(f) Check DTC.

OK:

DTC 54 is not output.

HINT:
Codes other than code 54 may be output at this time, but they are not relevant to this check.

NG → **Replace front passenger airbag assembly.**

OK

From the results of the above inspection, the malfunctioning part can now be considered normal. To make sure of this, use the simulation method to check.

DI5NC–02

DTC	Normal	Source Voltage Drop

CIRCUIT DESCRIPTION

The SRS is equipped with a voltage–increase circuit (DC–DC converter) in the airbag sensor assembly in case the source voltage drops.
When the battery voltage drops, the voltage–increase circuit (DC–DC converter) functions to increase the voltage of the SRS to normal voltage.
The diagnosis system malfunction display for this circuit is different to other circuits–when the SRS warning light remains lit up and the DTC is a normal code, source voltage drop is indicated.
Malfunction in this circuit is not recorded in the airbag sensor assembly, and the source voltage returns to normal, the SRS warning light automatically goes off.

DTC No.	Diagnosis
(Normal)	Source voltage drop.

WIRING DIAGRAM

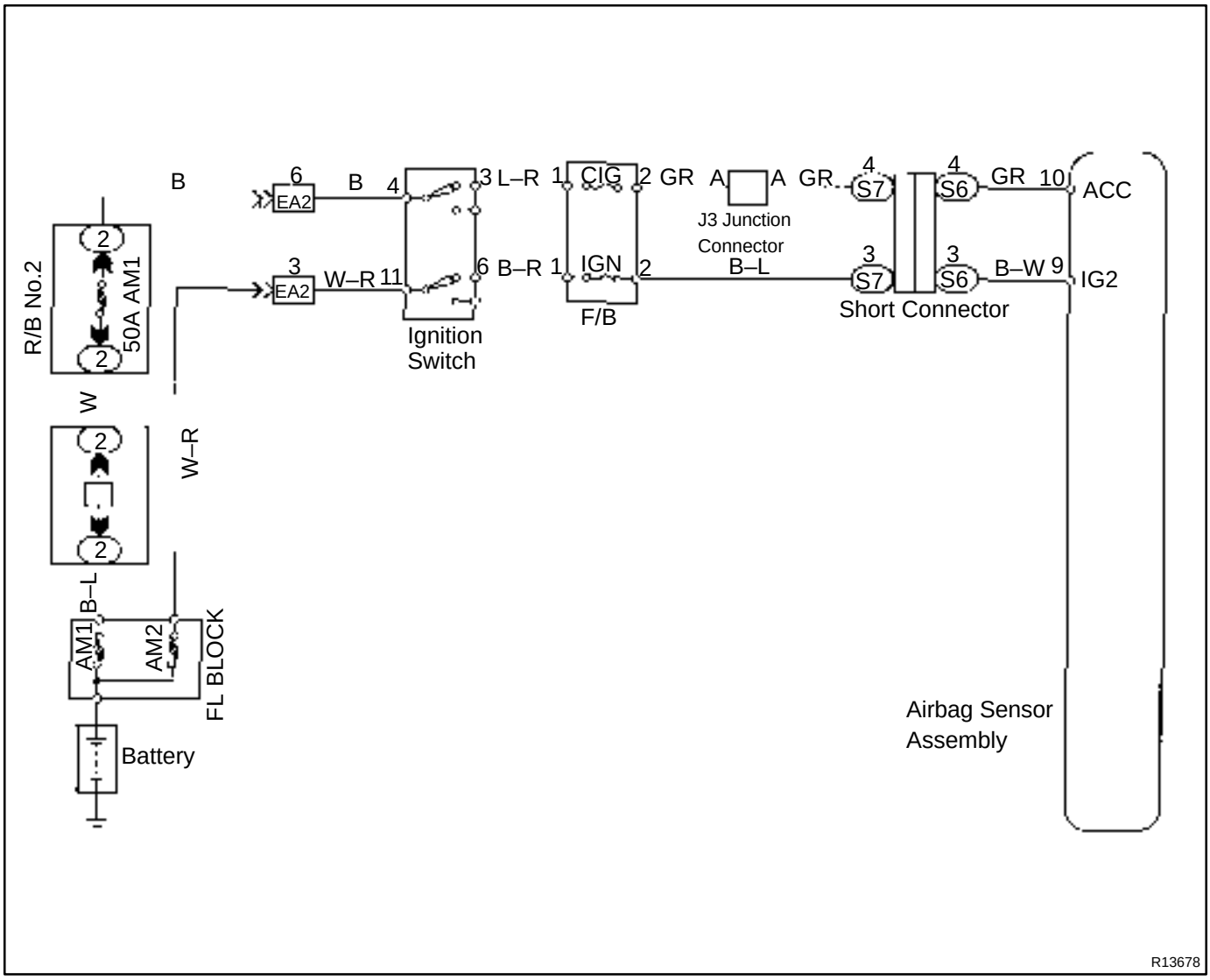

INSPECTION PROCEDURE

1	**Preparation.**

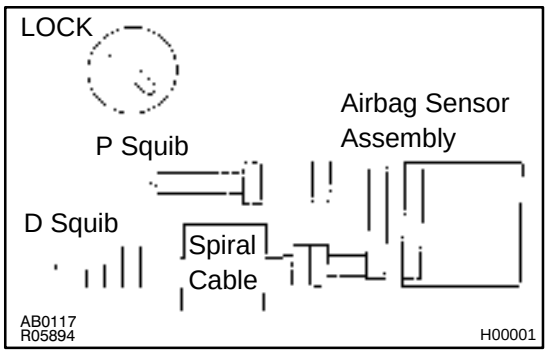

PREPARATION:

(a) Disconnect negative (–) terminal cable from the battery, and wait at least 90 seconds.

(b) Remove steering wheel pad (See page RS–8).

(c) Disconnect connector of front passenger airbag assembly (See page RS–22).

(d) Disconnect connector of airbag sensor assembly (See page RS–34).

CAUTION:

Store the steering wheel pad with the front surface facing upward.

2	**Check source voltage.**

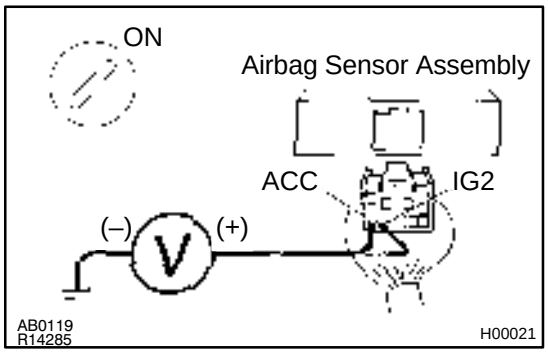

PREPARATION:

(a) Connect negative (–) terminal cable to battery.

(b) Turn ignition switch ON.

CHECK:

Measure voltage at IG2 or ACC on sensor and operate electric system (defogger, wiper, headlight, heater blower, etc.).

OK:

Voltage: 10 – 14 V

NG → **Check the harness between battery and airbag sensor assembly, and check the battery and charging system.**

OK

3	**Does SRS warning light turn off?**

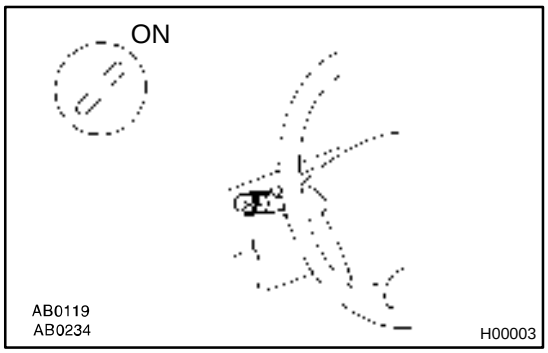

PREPARATION:

(a) Turn ignition switch to LOCK.
(b) Connect steering wheel pad connector.
(c) Connect front passenger airbag assembly connector.
(d) Connect airbag sensor assembly connector.
(e) Turn ignition switch ON.

CHECK:

Operate electric system (defogger, wiper, headlight, heater blower, etc.) and check that SRS warning light goes off.

NO → **Check for DTCs. If a DTC is output, perform troubleshooting for the DTC. If a normal code is output, replace airbag sensor assembly.**

YES

From the results of the above inspection, the malfunctioning part can now be considered normal. To make sure of this, use the simulation method to check.

DI5ND–02

SRS Warning Light Circuit Malfunction (Always lit up, when ignition switch is in LOCK position.)

CIRCUIT DESCRIPTION

The SRS warning light is located on the combination meter.
When the SRS is normal, the SRS warning light lights up for approx. 6 seconds after the ignition switch is turned from LOCK position to ACC or ON position, and then turns off automatically.
If there is a malfunction in the SRS, the SRS warning light lights up to inform the driver of the abnormality.
When terminals Tc and E1 of the DLC1 are connected, the DTC is displayed by the blinking of the SRS warning light.

WIRING DIAGRAM

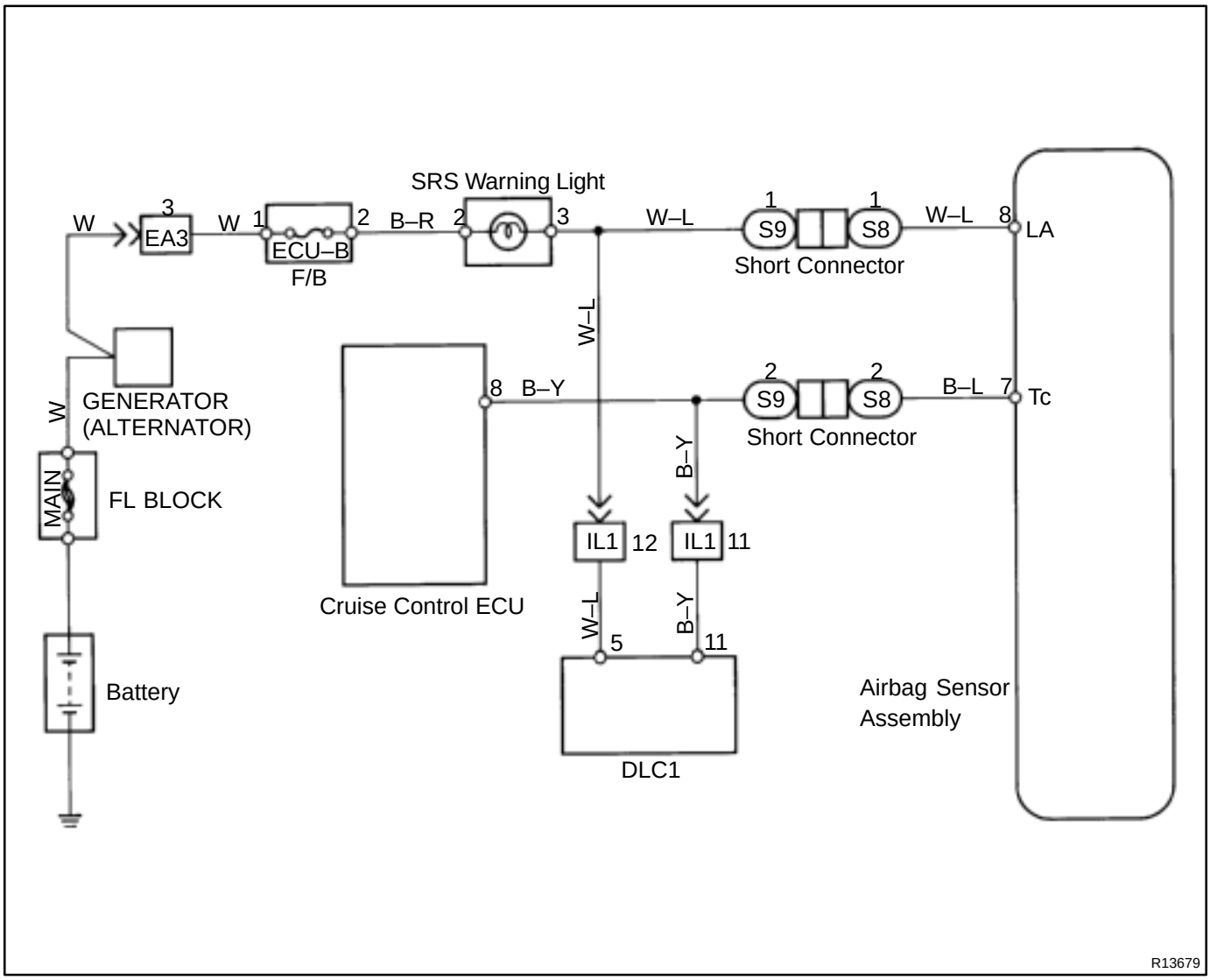

INSPECTION PROCEDURE

1	**Does SRS warning light turn off?**

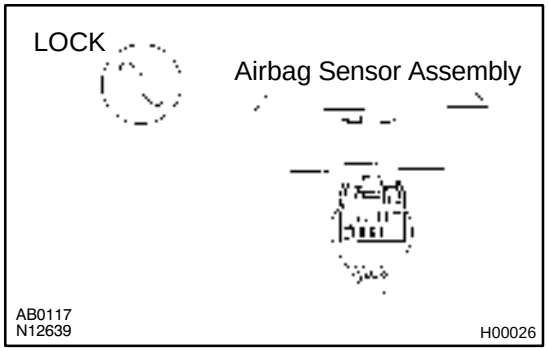

PREPARATION:

(a) Turn ignition switch to LOCK.

(b) Disconnect negative (–) terminal cable from the battery, and wait at least 90 seconds.

(c) Disconnect airbag sensor assembly connector.

(d) Connect negative (–) terminal cable to battery.

CHECK:

Check operation of SRS warning light.

NO → **Check SRS warning light circuit or terminal AB circuit of DLC1.**

YES ↓

Replace airbag sensor assembly.

DI5NE–02

SRS Warning Light Circuit Malfunction (Does not light up, when ignition switch is turned to ACC or ON.)

CIRCUIT DESCRIPTION

The SRS warning light is located on the combination meter.
When the SRS is normal, the SRS warning light lights up for approx. 6 seconds after the ignition switch is turned from LOCK position to ACC or ON position, and then turns off automatically.
If there is a malfunction in the SRS, the SRS warning light lights up to inform the driver of the abnormality.
When terminal Tc and E1 of the DLC1 are connected, the DTC is displayed by the blinking of the SRS warning light.

WIRING DIAGRAM

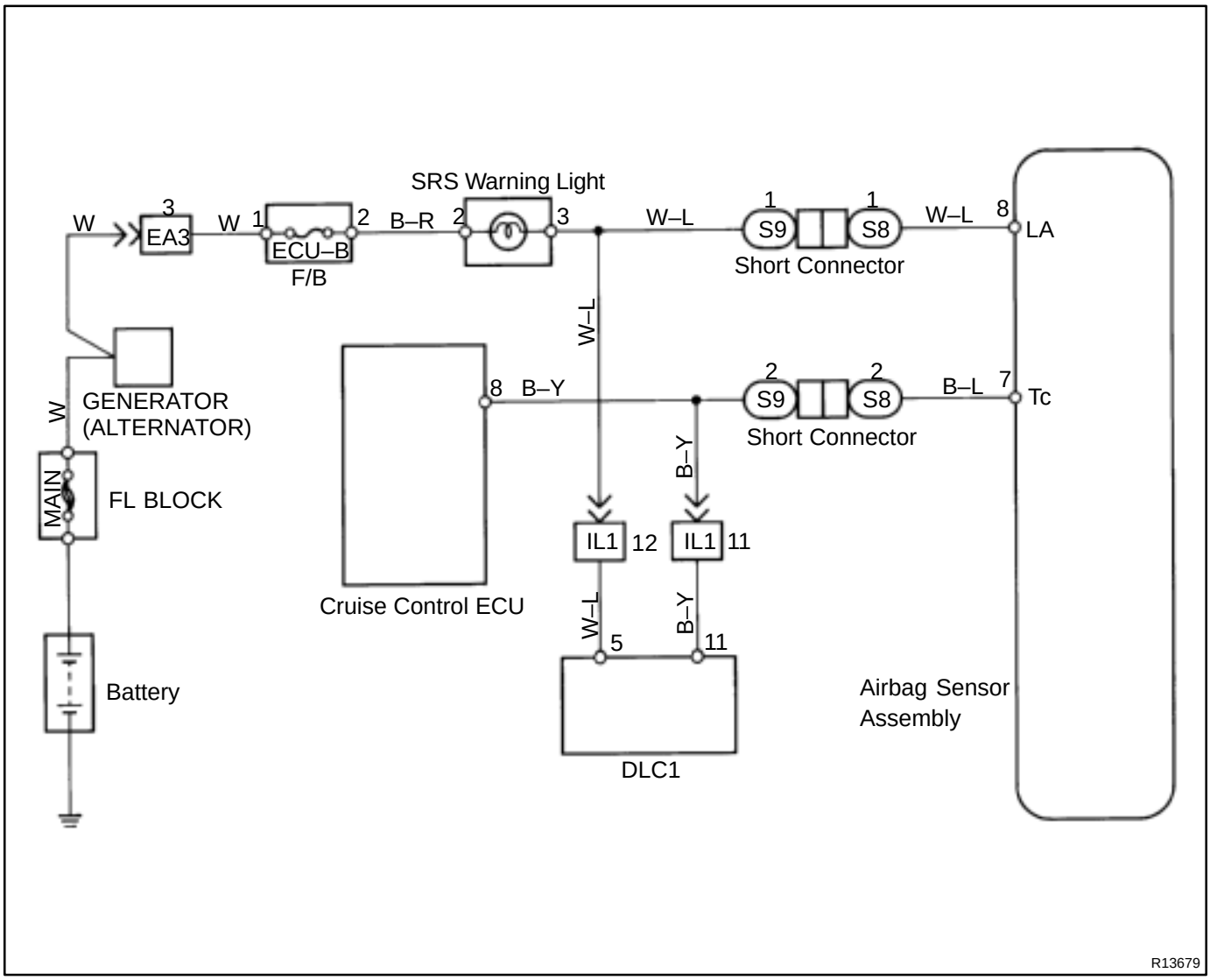

INSPECTION PROCEDURE

1	**Check ECU–B Fuse.**

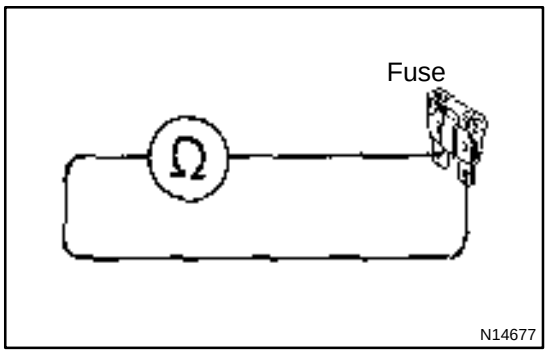

PREPARATION:
Remove ECU–B fuse.
CHECK:
Check continuity of ECU–B fuse.
OK:
Continuity
HINT:
- Fuse may be burnt out even if it appears to be OK during visual inspection.
- If fuse is OK, install it.

NG → **Go to step 5.**

OK

2	**Preparation (See step 1 on page DI–259).**

3	**Check SRS warning light circuit.**

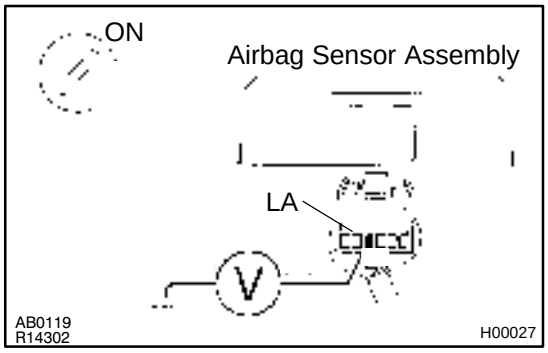

PREPARATION:
(a) Connect negative (–) terminal cable to battery.
(b) Turn ignition switch to ACC or ON.
CHECK:
Measure voltage LA terminal of harness side connector of air-bag sensor assembly.
OK:
Voltage: 10 – 14 V

NG → **Check SRS warning light bulb / repair SRS warning light circuit.**

OK

4	**Does SRS warning light come on?**

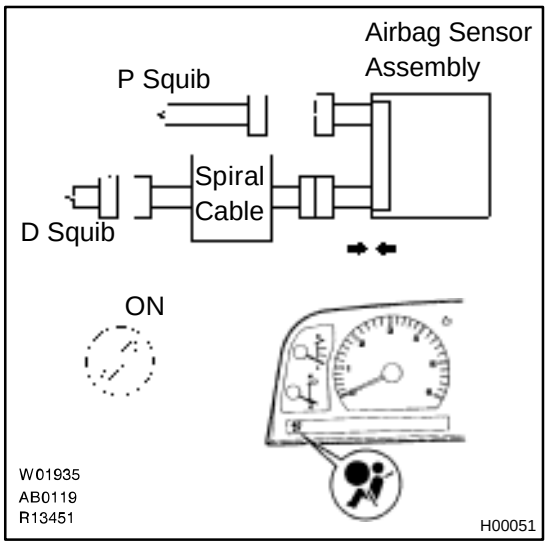

PREPARATION:

(a) Disconnect negative (–) terminal cable from the battery.
(b) Connect airbag sensor assembly connector.
(c) Connect negative (–) terminal cable to battery, are wait at least 2 seconds.
(d) Turn ignition switch to ACC or ON.

CHECK:

Check operation of SRS warning light.

NO → **Check terminal LA of airbag sensor assembly. If normal, replace airbag sensor assembly.**

YES

From the results of the above inspection, the malfunctioning part can now be considered normal. To make sure of this, use simulation method to check.

5	**Is new ECU–B fuse burnt out again?**

NO → **Using simulation method, reproduce malfunction symptoms (See page IN–17).**

YES

Check harness between ECU–B fuse and SRS warning light.

DI5NF–02

Tc Terminal Circuit

CIRCUIT DESCRIPTION

By connecting terminal Tc and E1 of the DLC1 the airbag sensor assembly is set in the DTC output mode. The DTCs are displayed by the blinking of the SRS warning light.

WIRING DIAGRAM

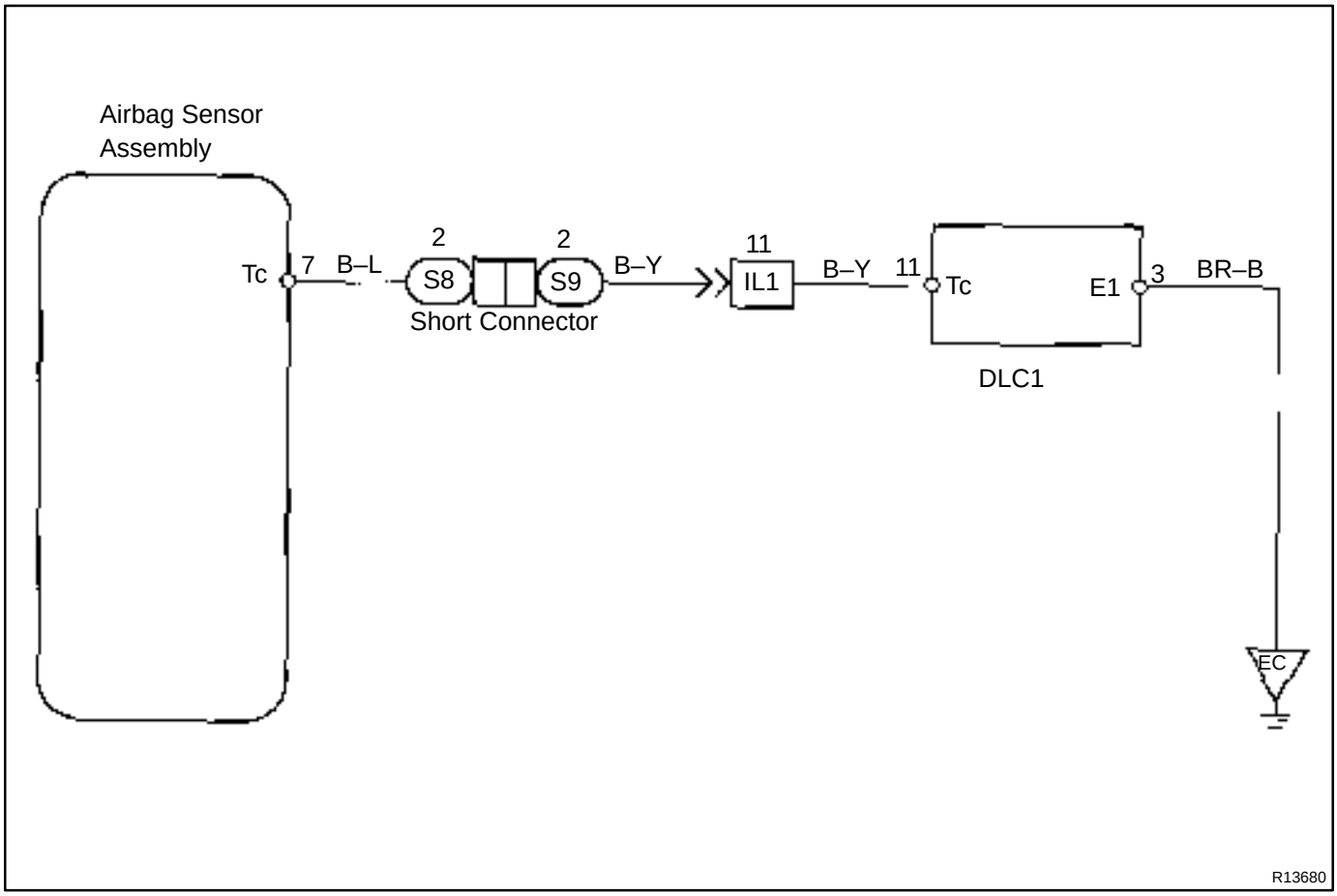

INSPECTION PROCEDURE
If the DTC is not displayed, do the following troubleshooting.

1	**Does SRS warning light up for approx. 6 seconds?**

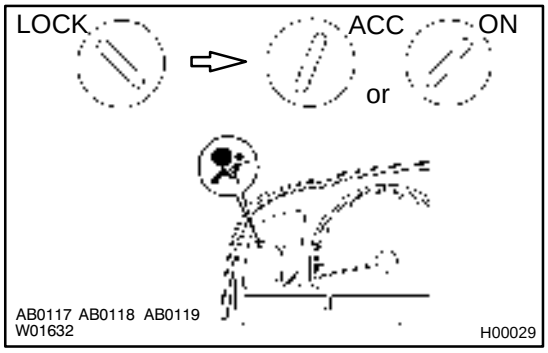

PREPARATION:
Check operation of SRS warning light after ignition switch is turned from LOCK position to ACC or ON position.

NO → **Check SRS warning light system (See page DI–227).**

YES

2	**Check voltage between terminals Tc and E1 of DLC1.**

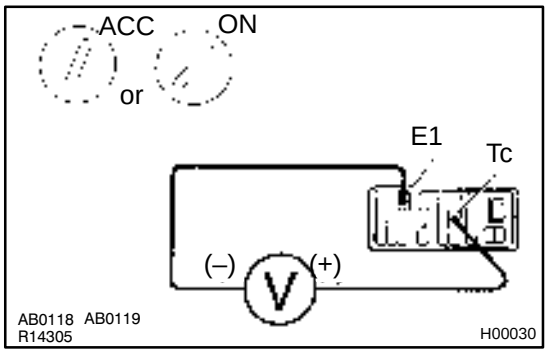

PREPARATION:
Turn ignition switch to ACC or ON.
CHECK:
Measure voltage between terminals Tc and E1 of DLC1.
OK:
Voltage: 10 – 14 V

OK → **Go to step 4.**

NG

3	**Check voltage between terminals Tc of DLC1 and body ground.**

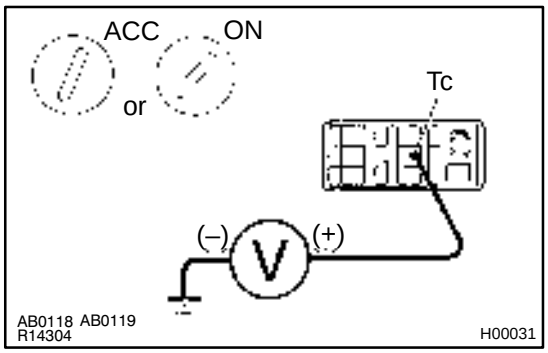

CHECK:

Measure voltage between terminal Tc of DLC1 and body ground.

OK:

Voltage: 10 – 14 V

OK → **Check harness between terminal E1 of DLC1 and body ground.**

NG

4	**Check airbag sensor assembly.**

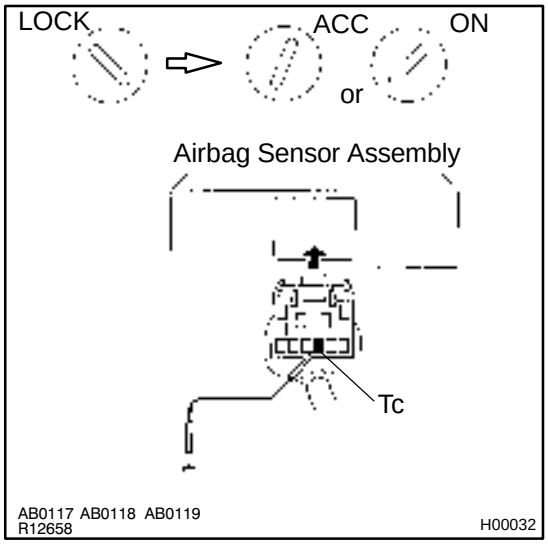

PREPARATION:

(a) Turn ignition switch to LOCK.
(b) Disconnect negative (–) terminal cable from the battery, and wait at least 90 seconds.
(c) Disconnect airbag sensor assembly connector.
(d) Insert service wire into terminal Tc from back side as shown.
(e) Connect airbag sensor assembly connector with service wire.
(f) Connect negative (–) terminal cable to battery.
(g) Turn ignition switch to ACC or ON and wait at least 20 seconds.
(h) Connect service wire of terminal Tc to body ground.

CHECK:

Check operation of SRS warning light.

OK:

SRS waning light comes on.

NOTICE:

Never make a mistake with the terminal connection position as this cause a malfunction.

OK → **Check harness between airbag sensor assembly and DLC1.**

NG →

Replace airbag sensor assembly.

If the DTC is displayed without a DTC check procedure, perform the following troubleshooting.

1	**Check resistance between terminal Tc of airbag sensor assembly and body ground.**

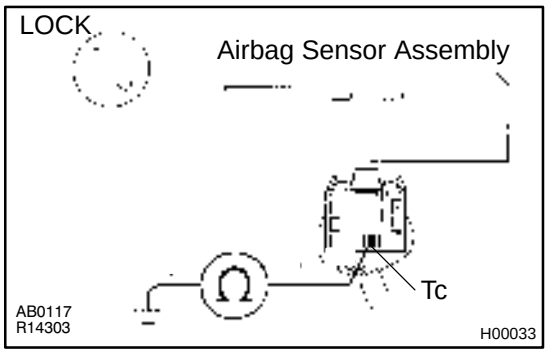

PREPARATION:

(a) Turn ignition switch to LOCK.

(b) Disconnect negative (–) terminal cable from the battery, and wait at least 90 seconds.

(c) Disconnect airbag sensor assembly connector.

CHECK:

Check resistance between terminal Tc of airbag sensor assembly connector.

OK:

Resistance: 1MΩ or Higher

NG → **Repair or replace harness or connector.**

OK ↓

Replace airbag sensor assembly.

CRUISE CONTROL SYSTEM

DI5NG–01

HOW TO PROCEED WITH TROUBLESHOOTING

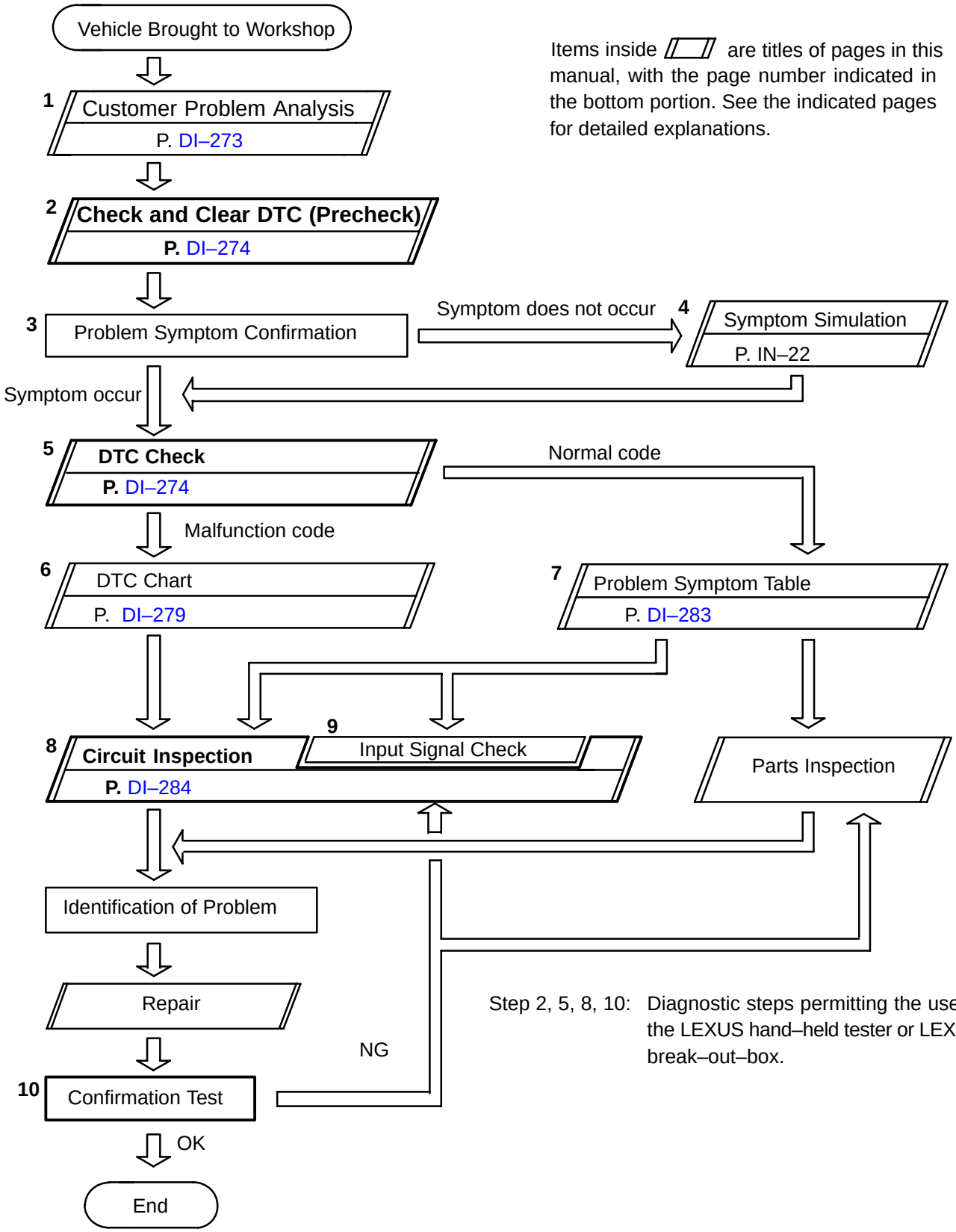

DI5NH–01

CUSTOMER PROBLEM ANALYSIS CHECK

CRUISE CONTROL SYSTEM Check Sheet

Inspector's name: _____

Customer's Name		**Registration No.**	
		Registration Year	
		Frame No.	
Date of Vehicle Brought in	/ /	**Odometer Reading**	**km** **Mile**

Condition of Problem Occurrence	**Date of Problem Occurrence**	/ /
	How Often does Problem Occur?	☐ Continuous ☐ Intermittent (Times a day)
	Vehicle Speed when Problem Occurred	**km** **Mile**

Symptoms	☐ Auto cancel occurs	● Driving condition ☐ City driving ☐ Freeway ☐ Up hill ☐ Down hill ● After cancel occurred, did the driver activate cruise control again? ☐ Yes ☐ No
	☐ Cancel does not occur	☐ With brake ON ☐ Except D position shift ☐ At 40 km/h (25 mph) or less ☐ When control SW turns to CANCEL position
	☐ Cruise control malfunction	☐ Slip to acceleration side ☐ Slip to deceleration side ☐ Hunting occurs ☐ O/D cut off does not occur ☐ O/D does not return
	☐ Switch malfunction	☐ SET ☐ ACCEL ☐ COAST ☐ RESUME ☐ CANCEL
	☐	☐ Remains ON ☐ Does not light up ☐ Blinking

DTC Check	**1st Time**	☐ Normal Code ☐ Malfunction Code (Code)
	2nd Time	☐ Normal Code ☐ Malfunction Code (Code)

DI5NI–02

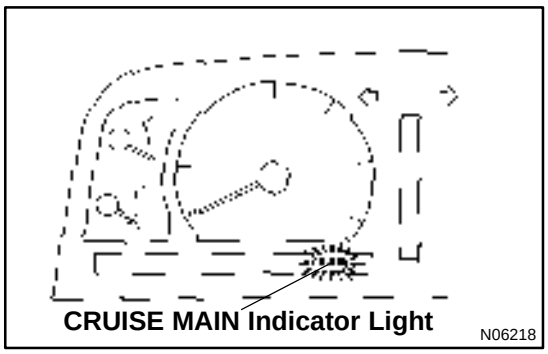

PRE–CHECK

1. DIAGNOSIS SYSTEM

(a) Check the indicator.

(1) Turn the ignition switch to ON.

(2) Check that the CRUISE MAIN indicator light comes on when the cruise control main switch is turned on, and that the indicator light goes off when the main switch is turned OFF.

HINT:

If the indicator check result is not normal, proceed to troubleshooting (See page BE–2) for the combination meter section.

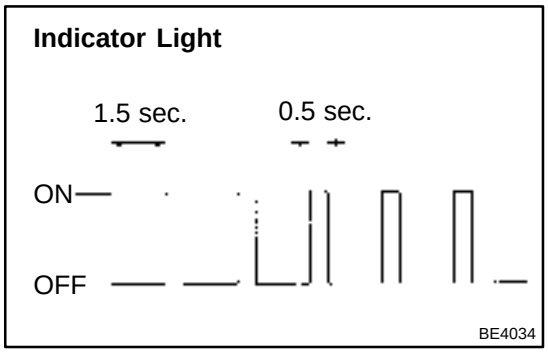

(b) Check the DTC.

HINT:

If a malfunction occurs in the No. 1 vehicle speed sensors or actuator, etc. during cruise control driving, the ECU actuates AUTO CANCEL of the cruise control and turns on and off the CRUISE MAIN indicator light to inform the driver of a malfunction. At the same time, the malfunction is stopped in memory as a diagnostic trouble code.

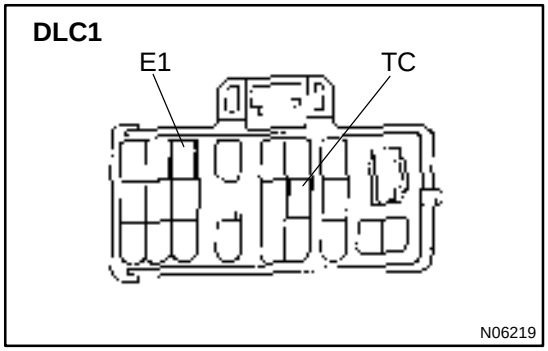

(c) Output of DTC using diagnosis check wire.

(1) Turn the ignition switch ON.

(2) Using SST, connect terminals Tc and E_1 of DLC1.

SST 09843–18020

(3) Read the DTC on the CRUISE MAIN indicator light.

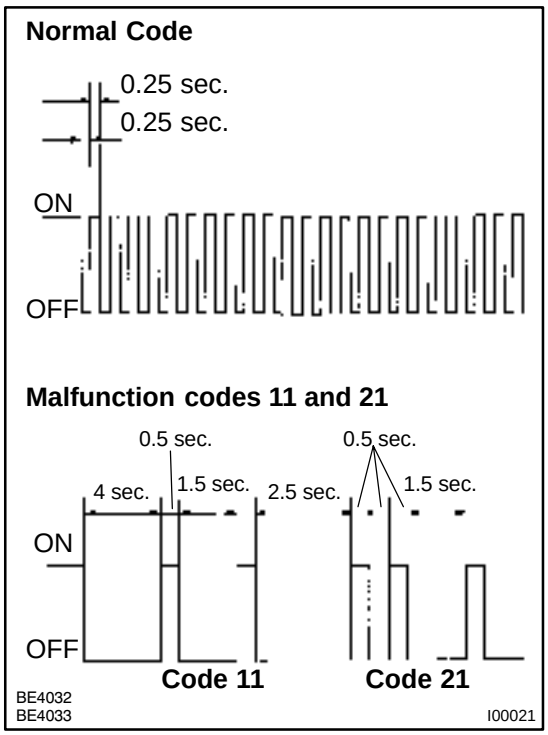

HINT:

- If the DTC is not output, inspect the diagnosis circuit (See page DI–322).
- As an example, the blinking patterns for codes; normal, 11 and 21 are shown in the illustration.

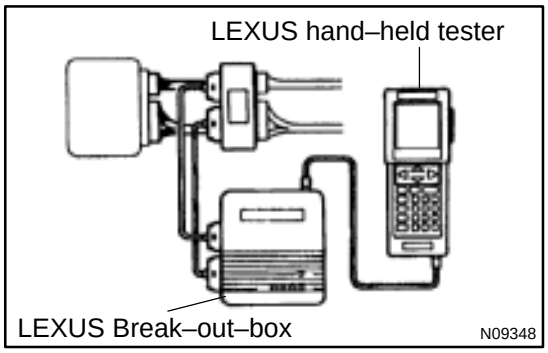

2. ECU TERMINAL VALUES MEASUREMENT BY USING LEXUS BREAK–OUT–BOX AND LEXUS HAND–HELD TESTER

(a) Hook up the LEXUS break–out–box and LEXUS hand–held tester to the vehicle.

(b) Read the ECU input/output values by following the prompts on the tester screen.

(c) Please refer to the LEXUS hand–held tester has a ”Snap-shot” function. This records the measured data and is effective in the diagnosis of intermittent problems.

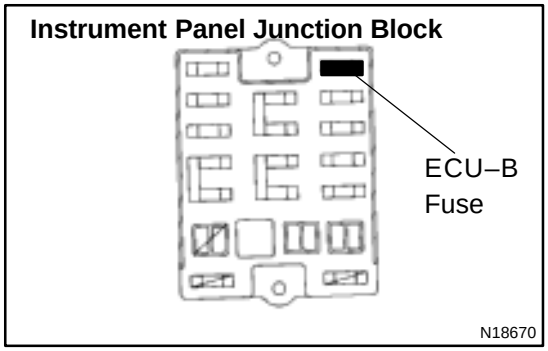

3. DTC CLEARANCE

(a) After completing repairs, the diagnostic trouble code retained in memory can be cleared by removing the ECU–B fuse for 10 seconds or more, with the ignition switch off.

(b) Check that the normal code is displayed after connecting the fuse.

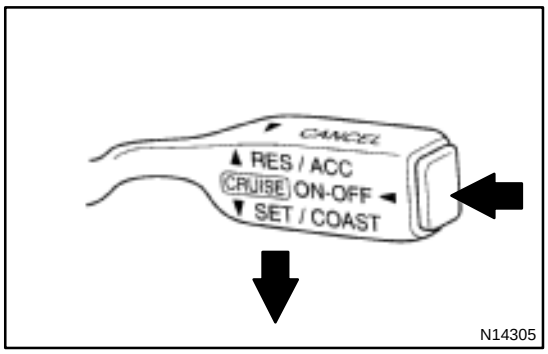

4. PROBLEM SYMPTOM CONFIRMATION (ROAD TEST)

(a) Inspect the SET switch.
- (1) Push the main switch ON.
- (2) Drive at a desired speed (40 km/h (25 mph) or higher).
- (3) Press the control switch to the SET/COAST.
- (4) After releasing the switch, check that the vehicle cruises at the desired speed.

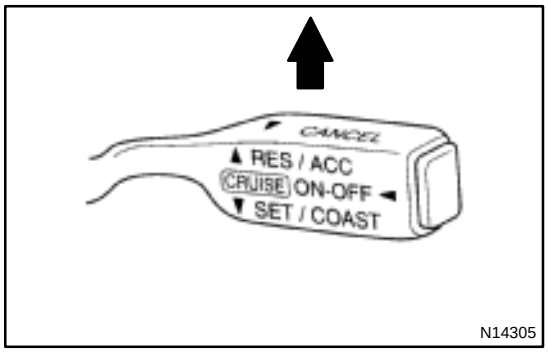

(b) Inspect the ACCEL switch.
- (1) Push the main switch ON.
- (2) Drive at a desired speed (40 km/h (25 mph) or higher).
- (3) Check that the vehicle speed is increased while the control switch turned to RES/ACC, and that the vehicle cruises at the set speed when the switch is released.
- (4) Momentarily press the control switch upward in the RES/ACC and then immediately release it. Check that the vehicle speed increases by about 1.5 km/h (Tap–up function).

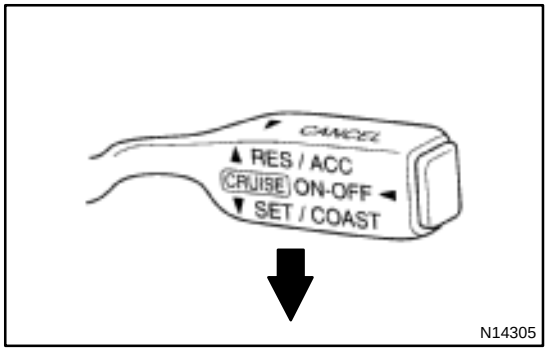

(c) Inspect the COAST switch.
- (1) Push the main switch ON.
- (2) Drive at a desired speed (40 km/h (25 mph) or higher).
- (3) Check that the vehicle speed is decreased while the control switch is turned to SET/COAST, and the vehicle cruise at the set speed when the switch is released.
- (4) Momentarily press the control switch is turned to SET/COAST, and then immediately release it. Check that the vehicle speed decreases by about 1.5 km/h (Tap–down function).

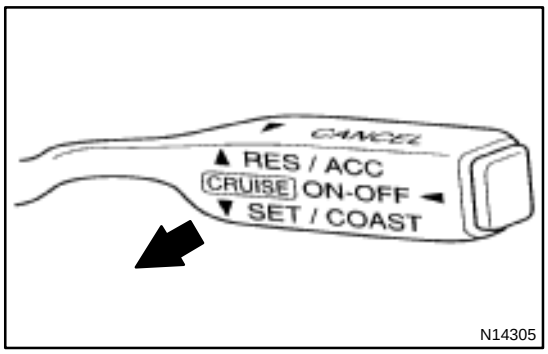

(d) Inspect the CANCEL switch.
  (1) Push the main switch ON.
  (2) Drive at a desired speed (40 km/h (25 mph) or higher).
  (3) When operating one of the followings, check that the cruise control system is cancelled and that the normal driving mode is reset.
    - Depress the brake pedal
    - Shift to except D position
    - Push the main switch OFF
    - Pull the cruise control switch to CANCEL

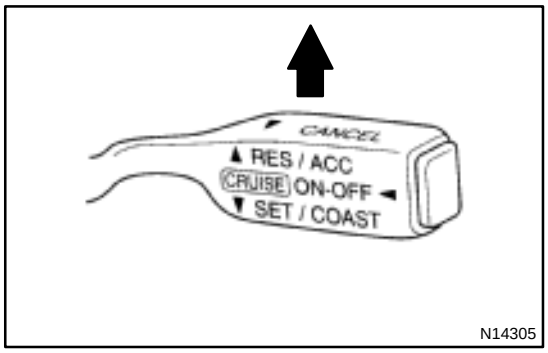

(e) Inspect the RESUME switch.
  (1) Push the main switch ON.
  (2) Drive at a desired speed (40 km/h (25 mph) or higher).
  (3) When operating one of the followings, check that the cruise control system is cancelled and that the normal driving mode is reset.
    - Depress the brake pedal
    - Shift to except D position
    - Pull the cruise control switch to CANCEL
  (4) After the control switch is turned to RES/ACC at the driving speed of more than 40 km/h (25 mph), check that the vehicle restores the speed prior to the cancellation.

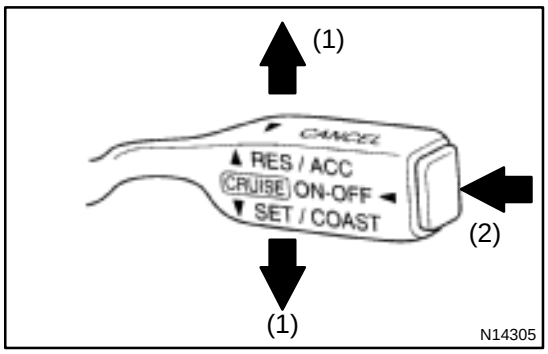

5. INPUT SIGNAL CHECK

HINT:

- For check No.1 – No.3
  Turn ignition switch ON.
- For check No.4
  Jack up the vehicle.
  Start the engine.
  Shift to D position.

(a) Press the control switch to SET/COAST or RES/ACC position and hold it down or hold it up (1).
(b) Push the main switch ON (2).
(c) Check that the CRUISE MAIN indicator light blinks twice or 3 times repeatedly after 3 seconds.
(d) Turn the SET/COAST or RES/ACC switch OFF.
(e) Operate each switch as listed in the table below.
(f) Read the blinking pattern of the CRUISE MAIN indicator light.
(g) After performing the check, turn the main switch OFF.

HINT:
When 2 or more signals are input to the ECU, the lowest numbered code will be displayed first.

No.	Operation Method	CRUISE MAIN Indicator Light Blinking Pattern	Diagnosis
1	Turn SET/COAST switch ON	Light ON / OFF; 0.25 sec. 0.25 sec. 1sec.	SET/COAST switch circuit is normal
2	Turn RES/ACC switch ON	Light ON / OFF	RES/ACC switch circuit is normal
3	Turn CANCEL switch ON	Light ON / OFF; Switch OFF; Switch ON	CANCEL switch circuit is normal
	Turn stop light switch ON Depress brake pedal		Stop light switch circuit is normal
	Turn PNP switch OFF (Shift to except D position)	Light ON / OFF; Switch ON; Switch OFF	PNP switch circuit is normal
4	Drive at about 40 km/h (25 mph)or higher	Light ON / OFF	Vehicle Speed Sensor is normal
	Drive at about 40 km/h (25 mph) or below	Light ON / OFF	

DI5NJ–01

DIAGNOSTIC TROUBLE CODE CHART

If a malfunction code is displayed during the DTC check, check the circuit listed for that code in the table below and proceed to the appropriate page.

DTC No. (See Page)	Circuit inspection	Trouble Area
11 (DI–284)	Actuator Motor Circuit	• Actuator motor • Harness or connector between cruise control ECU and actuator motor • Cruise control ECU
12 (DI–286)	Actuator Magnetic Clutch Circuit	• STOP Fuse • Stop light switch • Actuator magnetic clutch • Harness or connector between cruise control ECU and actuator magnetic clutch, actuator magnetic clutch and body ground • Cruise control ECU
13 (DI–289)	Actuator Position Sensor Circuit	• Actuator position sensor • Harness or connector between cruise control ECU and actuator position sensor • Cruise control ECU
14 (DI–292)	Actuator Mechanical Malfunction	• Actuator motor (actuator lock: motor, arm) • Harness or connector between cruise control ECU and actuator motor • Cruise control ECU
21 (DI–294)	Open in Vehicle Speed Sensor Circuit	• Combination meter • Harness or connector between cruise control ECU and combination meter, combination meter and vehicle speed sensor • Vehicle speed sensor • Cruise control ECU
23 (DI–297)	Vehicle Speed Signal Abnormal	• Vehicle speed sensor • Cruise control ECU
32 (DI–298)	Control Switch Circuit	• Cruise control switch • Harness or connector between cruise control ECU and cruise control switch, cruise control switch and body ground • Cruise control ECU

DI5NK–02

PARTS LOCATION

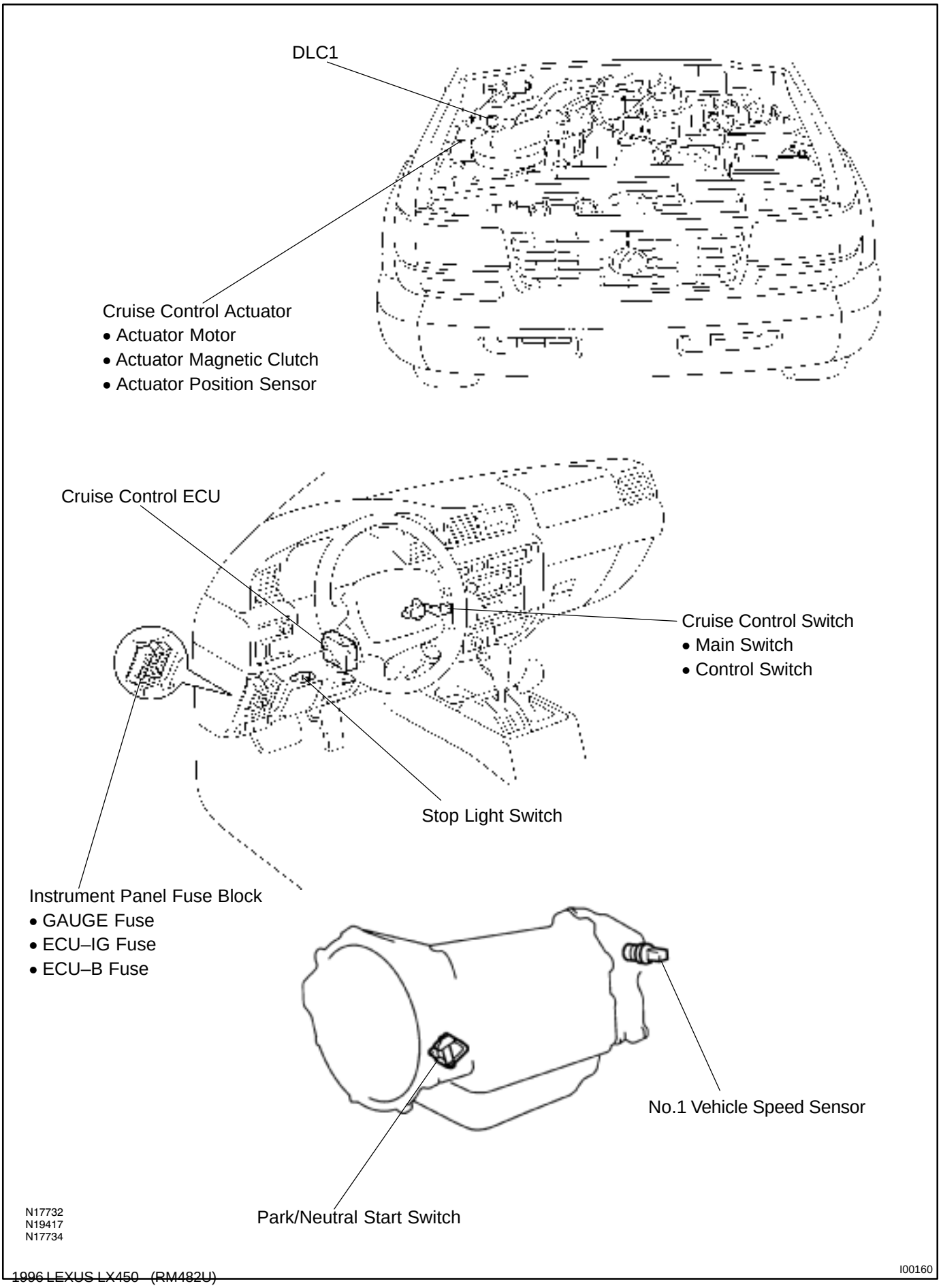

DI5NL–02

TERMINALS OF ECM

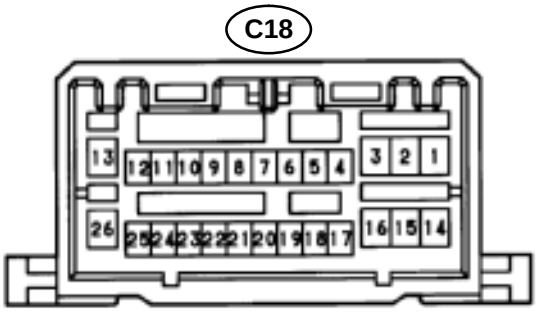

Vd–26–2–E

I00410

Symbols (Terminal No.)	Wiring Color	Condition	STD Voltage (V)
D ↔ GND (C18–2 ↔ C18–13)	B–W ↔ BR	Shift to except D position	Below 1 V
		Shift to D position	10 – 16 V
PI ↔ GND (C18–7 ↔ C18–13)	G–Y ↔ BR	Ignition switch ON Cruise control main switch ON	Below 1.2 V
		Ignition switch ON Cruise control main switch OFF	10 – 16 V
TC ↔ GND (C18–8 ↔ C18–13)	B–Y ↔ BR	Ignition switch ON	10 – 16 V
		Ignition switch ON Connect terminals TC and E1 of diagnostic check connector	Below 1 V
OD ↔ GND (C18–9 ↔ C18–13)	G–O ↔ BR	During cruise control driving OD switch ON	10 – 16 V
		During cruise control driving OD switch OFF (3rd driving)	Below 1 V
L ↔ GND (C18–10 ↔ C18–13)	R ↔ BR	During cruise control driving	9 – 15 V
		Except during cruise control driving	Below 1 V
MC ↔ GND (C18–11 ↔ C18–13)	L–R ↔ BR	During cruise control driving COAST switch hold ON	9 – 15 V
		During cruise control driving ACC switch hold ON	Below 1 V
MO ↔ GND (C18–12 ↔ C18–13)	L ↔ BR	During cruise control driving ACC switch hold ON	9 – 15 V
		During cruise control driving COAST switch hold ON	Below 1 V
GND ↔ Body Ground (C18–13 ↔ Body Ground)	BR ↔ Body Ground	Constant	Below 1 V
B ↔ GND (C18–14 ↔ C18–13)	B–W ↔ BR	Ignition switch ON	10 – 16 V
BATT ↔ GND (C18–15 ↔ C18–13)	B–R ↔ BR	Constant	10 – 16 V
STP– ↔ GND (C18–16 ↔ C18–13)	G–W ↔ BR	Depress brake pedal	10 – 16 V
		Release brake pedal	Below 1 V

Symbols (Terminals No.)	Wiring Color	Condition	STD Voltage (V)
CCS ↔ GND (C18–18 ↔ C18–13)	B–G ↔ BR	Ignition switch ON	10 – 16 V
		Ignition switch ON CANCEL switch hold ON	5.1 – 8.3 V
		Ignition switch ON SET/COAST switch hold ON	2.4 – 4.0 V
		Ignition switch ON RES/ACC switch hold ON	0.8 – 1.4 V
CMS ↔ GND (C18–19 ↔ C18–13)	Y–R ↔ BR	Ignition switch ON Main switch ON	Below 1 V
		Ignition switch ON Main switch OFF	10 – 16 V
SPD ↔ GND (C18–20 ↔ C18–13)	L–W ↔ BR	Ignition switch ON	4.7 – 5.2 V
		During driving	3 – 7 V
IDL ↔ GND (C18–21 ↔ C18–13)	G–W ↔ BR	Ignition switch ON Throttle valve fully closed	Below 1 V
		Ignition switch ON Throttle valve fully opened	10 – 16 V
ECT ↔ GND (C18–22 ↔ C18–13)	G–R ↔ BR	During driving Gear position O/D	Below 1 V
		During driving Gear position 3rd	10 – 16 V
VR1 ↔ GND (C18–23 ↔ C18–13)	Y ↔ BR	Ignition switch ON	4.7 – 5.2 V
VR2 ↔ VR3 (C18–24 ↔ C18–25)	Y–G ↔ Y–L	During cruise control driving	1.0 – 4.7 V
		Ignition switch ON Actuator control plate fully opened	4.2 – 4.7 V
		Ignition switch ON Actuator control plate fully closed	1.0 – 1.2 V
VR3 ↔ GND (C18–25 ↔ C18–13)	Y–L ↔ BR	Constant	Below 1 V
L– ↔ GND (C18–26 ↔ C18–13)	↔ BR	Constant	Below 1 V

DI5NM–01

PROBLEM SYMPTOMS TABLE

Symptom	Suspect Area	See page
SET not occourring or CANCEL occurring. (DTC is Normal)	6. Main Switch Circuit (Cruise control switch) 7. Vehicle Speed Sensor 8. Control Switch Circuit (Cruise control switch) 9. Stop Light Switch Circuit 10.Park/Neutral Position Switch Circuit 11.Actuator Motor Circuit 12.Cruise Control Cable 13.Cruise Control ECU	DI–318 DI–294 DI–298 DI–301 DI–310 DI–284 DI–324 IN–27
SET not occurring or CANCEL occurring. (DTC dose not output)	1. ECU Power Source Circuit 2. Cruise Control ECU	DI–313 IN–27
Actual vehicle speed deviates above or below the set speed.	1. Cruise Control Cable 2. Vehicle Speed Signal Abnormal 3. Electronically Controlled Transmission Communication Circuit 4. Actuator Motor Circuit 5. Idle Signal Circuit (Main throttle position sensor) 6. Cruise Control ECU	DI–324 DI–297 DI–307 DI–284 DI–304 IN–27
Gear shifting frequent between 3rd O/D when driving on uphill road. (Hurting)	1. Electronically Controlled Transmission Communication Circuit 2. Cruise Control ECU	DI–307 IN–27
Cruise control not cancelled, even when brake pedal is depressed.	1. Cruise Control Cable 2. Stop Light Switch Circuit 3. Actuator Motor Circuit 4. Cruise Control ECU	DI–324 DI–301 DI–284 IN–27
Cruise control not cancelled, even when transmission is shifted to ”N” postion.	1. Cruise Control Cable 2. Park/Neutral Position Switch Circuit 3. Actuator Motor Circuit 4. Cruise Control ECU	DI–324 DI–310 DI–284 IN–27
Control switch does not operate. (SET/COAST, ACC/RES, CANCEL not possible)	1. Cruise Control Cable 2. Control Switch Circuit 3. Actuator Motor Circuit 4. Cruise Control ECU	DI–324 DI–298 DI–284 IN–27
SET possible at 40 km/h (25 mph) or less, or CANCEL does not operate at 40 km/h (25 mph) or less.	1. Cruise Control Cable 2. Vehicle Speed Signal Abnormal 3. Actuator Motor Circuit 4. Cruise Control ECU	DI–324 DI–297 DI–284 IN–27
Poor response is ACCEL and RESUME modes.	1. Cruise Control Cable 2. Electronically Controlled Transmission Communication Circuit 3. Actuator Motor Circuit 4. Cruise Control ECU	DI–324 DI–307 DI–284 IN–27
O/D does not RESUME, even though the road is not uphill.	1. Electronically Controlled Transmission Communication Circuit 2. Cruise Control ECU	DI–307 IN–27
DTC memory is erased.	1. Back–up Power Source Circuit 2. Cruise Control ECU	DI–316 IN–27
DTC is not output, or is output when is should not be.	1. Diagnosis Circuit 2. Cruise Control ECU	DI–322 IN–27
Cruise MAIN indicator light remains ON or fall to light up.	1. Cruise MAIN Indicator Light Switch Circuit	DI–320

DI5NN–02

CIRCUIT INSPECTION

DTC	11	Actuator Motor Circuit

CIRCUIT DESCRIPTION

The actuator motor is operated by signals from the ECU. Acceleration and deceleration signals are transmitted by changes in the Duty Ratio (See note below).

Duty Ratio

The duty ratio is the ratio of the period of continuity in one cycle. For example, if A is the period of continuity in one cycle, and B is the period of non–continuity, then.

$$\text{Duty Ratio} = \frac{A}{A + B} \times 100\ (\%)$$

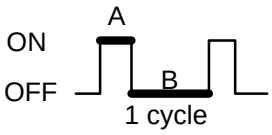

DTC No.	Detection Item	Trouble Area
11	• Short in actuator motor circuit.	• Actuator motor • Harness or connector between cruise control ECU and actuator motor • Cruise control ECU

WIRING DIAGRAM

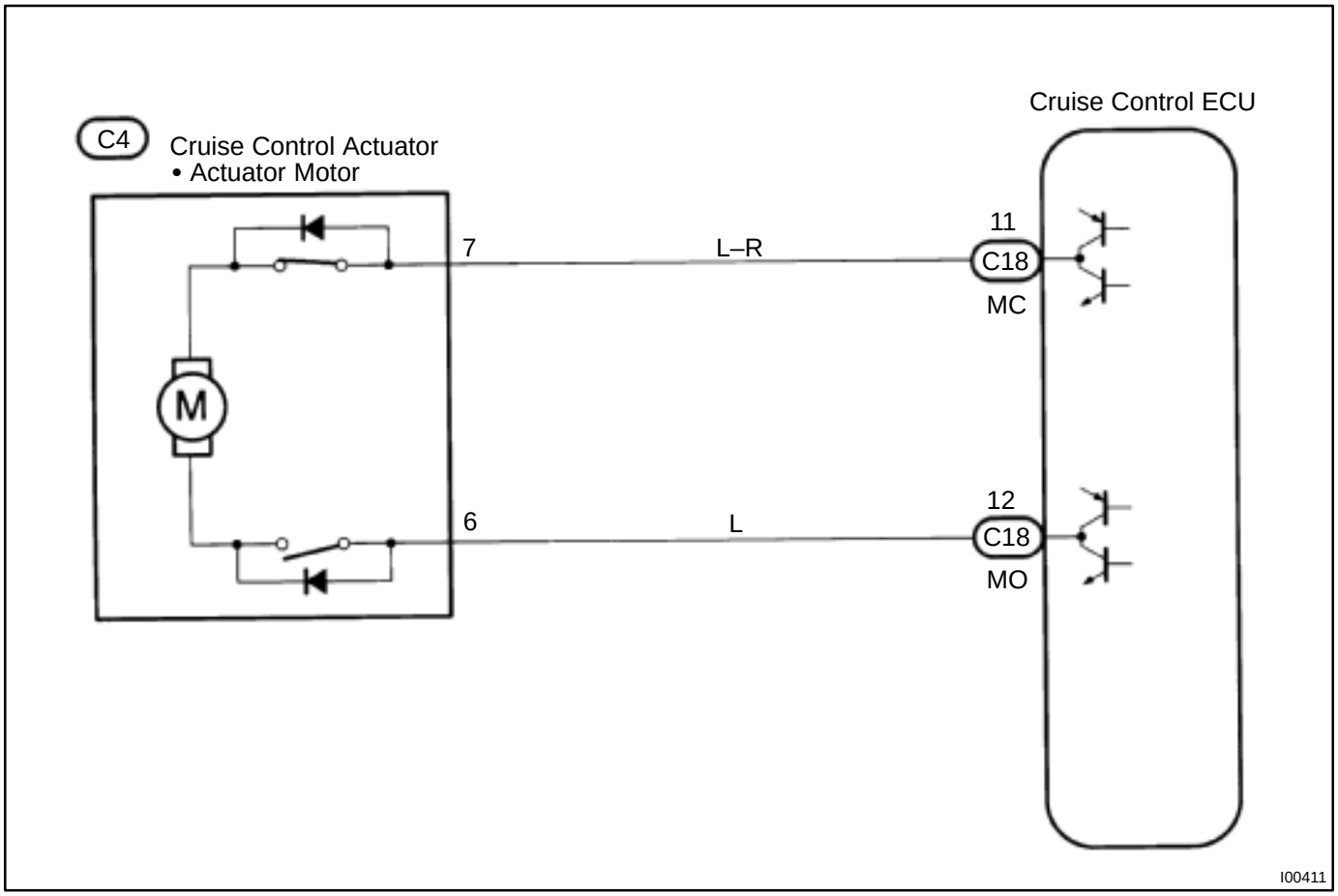

INSPECTION PROCEDURE

1	Check resistance between terminals MO and MC of actuator motor.

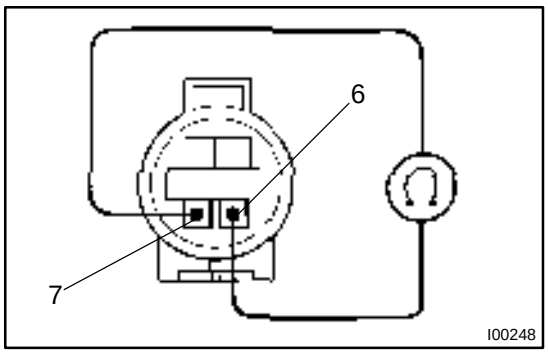

PREPARATION:

(a) Turn ignition switch OFF.

(b) Disconnect the actuator connector.

CHECK:

Measure resistance between terminals 6 and 7.

HINT:

If control plate position is fully opened or fully closed, resistance can not measure.

OK:

Resistance: More than 4.2 Ω

NG → **Replace cruise control actuator.**

OK

2	Check for open and short in harness and connectors between cruise control ECU and actuator motor (See page IN–27).

NG → **Repair or replace harness or connector.**

OK

Check and replace cruise control ECU (See page IN–27).

DI5NO–02

DTC	12	Actuator Magnetic Clutch Circuit

CIRCUIT DESCRIPTION

This circuit turns on the magnetic clutch inside the actuator during cruise control operation according to the signal from the ECU. If a malfunction occurs in the actuator or speed sensor, etc. during cruise control operation, the rotor shaft between the motor and control plate is released.
When the brake pedal is depressed, the stop light switch turns on, supplying electrical power to the stop light. Power supply to the magnetic clutch is mechanically cut and the magnetic clutch is turned OFF.
When driving downhill, if the vehicle speed exceeds the set speed by 15 km/h (9 mph), the ECU turns the safety magnet clutch OFF. If the vehicle speed later drops to within 10 km/h (6 mph) above the set speed, then cruise control at the set speed is resumed.

DTC No.	Detection Item	Trouble Area
12	• Short in actuator magnetic clutch circuit. • Open (0.8 sec.) in actuator magnetic clutch circuit.	• STOP Fuse • Stop light switch • Actuator magnetic clutch • Harness or connector between cruise control ECU and actuator magnetic clutch, actuator magnetic clutch and body ground • Cruise control ECU

WIRING DIAGRAM

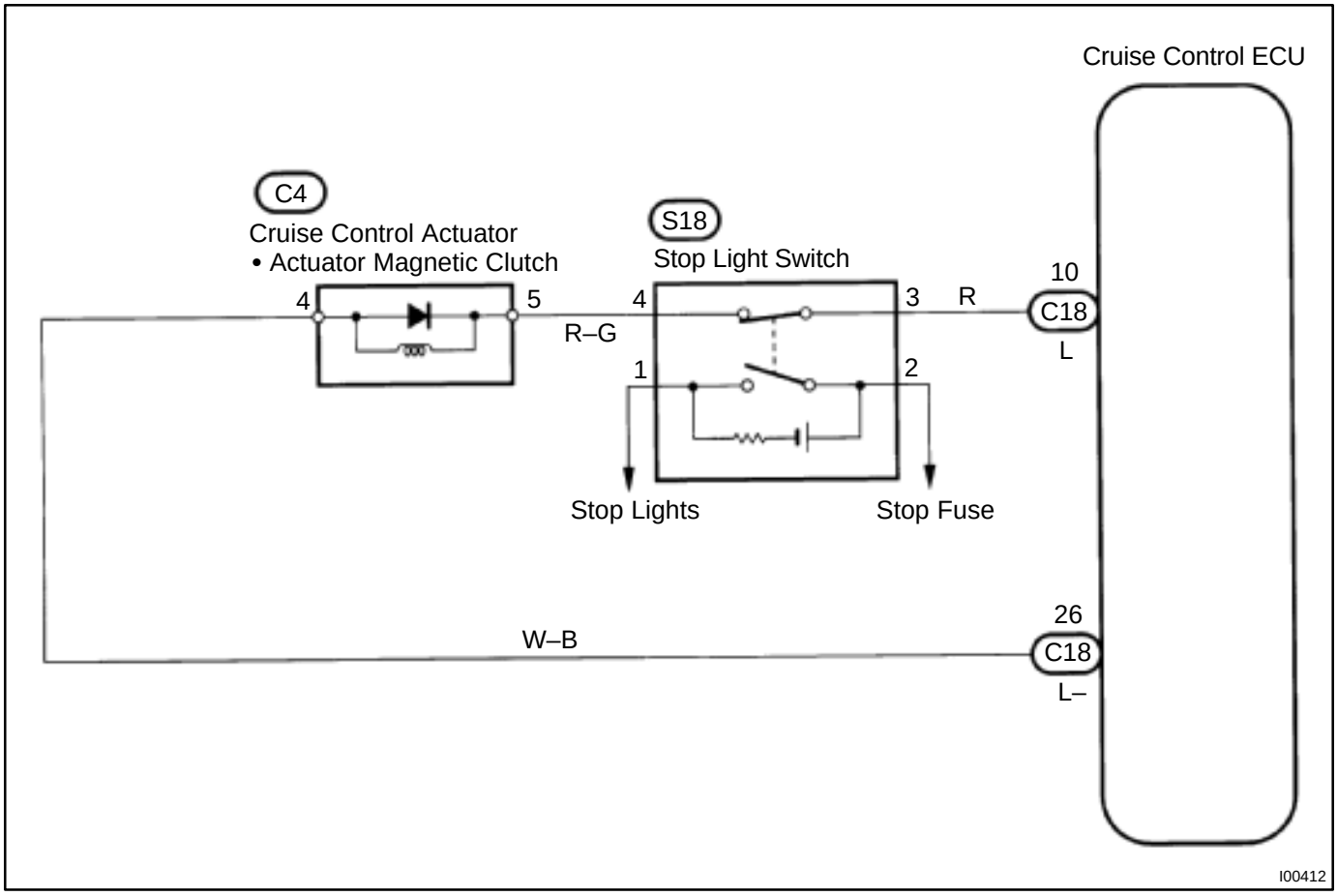

INSPECTION PROCEDURE

1	**Check STOP fuse.**

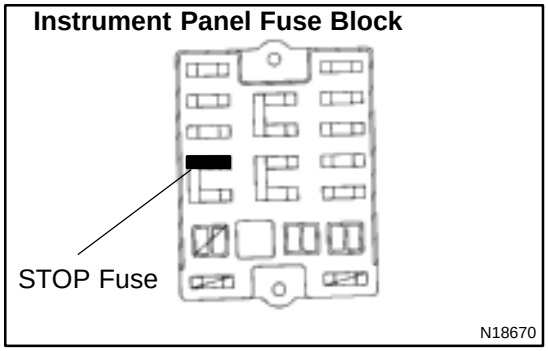

PREPARATION:

(a) Turn ignition switch OFF.

(b) Remove the STOP fuse from instrument panel fuse block.

CHECK:

Check fuse continuity.

OK:

There is continuity.

NG → **Replace STOP fuse.**

OK

2	**Check stop light switch.**

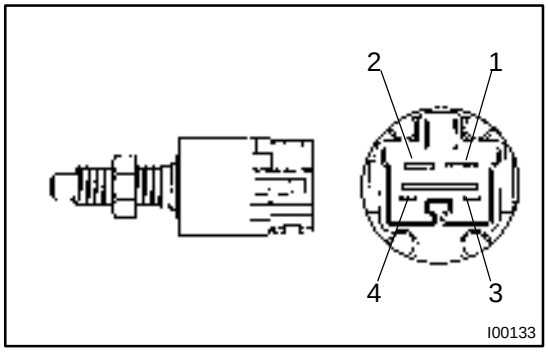

PREPARATION:

Disconnect the stop light switch connector.

CHECK:

Check continuity between terminals.

Switch position	Continuity
Switch pin free (Brake pedal depressed)	1 – 2
Switch pin pushed in (Brake pedal released)	3 – 4

NG → **Replace stop light switch.**

OK

3	**Check resistance between terminals L and GND of actuator magnetic clutch.**

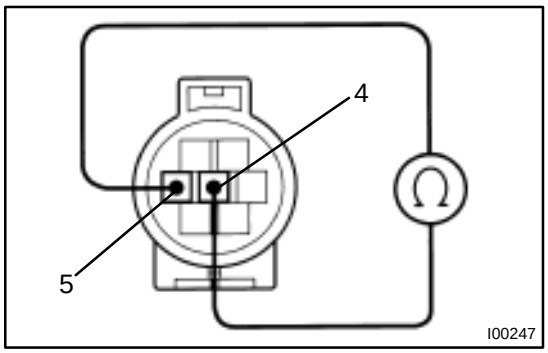

PREPARATION:

(a) Turn ignition switch OFF.

(b) Disconnect the actuator connector.

CHECK:

Measure resistance between terminals 4 and 5.

OK:

Resistance: 34.65 – 42.35 Ω.

NG → **Replace cruise control actuator.**

OK

4	**Check for open and short in harness and connectors between cruise control ECU and actuator magnetic clutch, actuator magnetic clutch and body ground (See page IN–27).**

NG → **Repair or replace harness or connector.**

OK

Check and replace cruise control ECU (See page IN–27).

DI5NP–02

DTC	13	Actuator Position Sensor Circuit

CIRCUIT DESCRIPTION

The circuit detects the rotation position of the actuator control plate and sends a signal to the ECU.

DTC No.	Detection Item	Trouble Area
13	• Position sensor detects abnormal voltage.	• Actuator position sensor • Harness or connector between cruise control ECU and actuator position sensor • Cruise control ECU

WIRING DIAGRAM

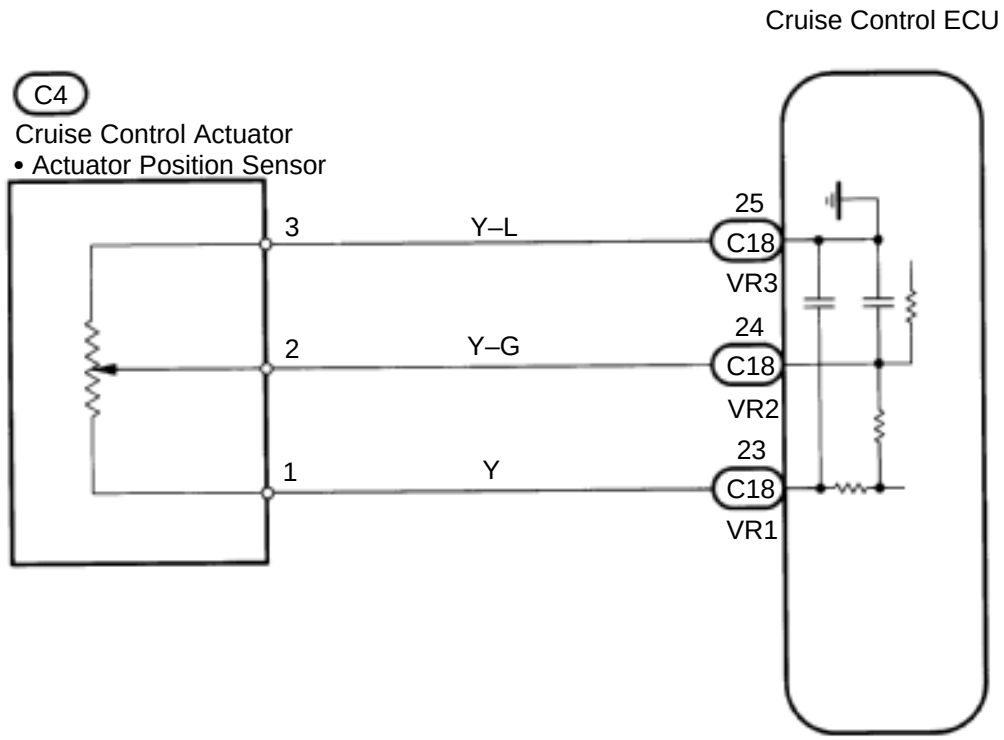

I00413

INSPECTION PROCEDURE

1	**Check resistance between terminals VR2 and VR3 of cruise control ECU connector.**

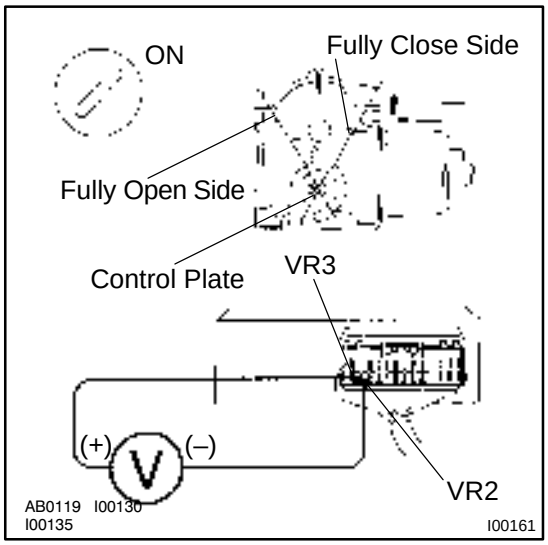

PREPARATION:

(a) Remove the ECU with connectors still connected.

(b) Turn ignition switch OFF.

CHECK:

Measure voltage between terminals VR2 and VR3 of ECU connector while turning control plate slowly by hand from the deceleration side to the acceleration side.

OK:

Voltage:
Fully closed: Approx. 1.3 V
Fully opened: Approx. 4.1 V
In addition, as the control plate is turned, the voltage should increase gradually without interruption.

NG → **Proceed to next circuit inspection shown on problem symptom table (See page DI–283).**

OK

2	**Check resistance between terminals VR1 and VR3 of actuator position sensor.**

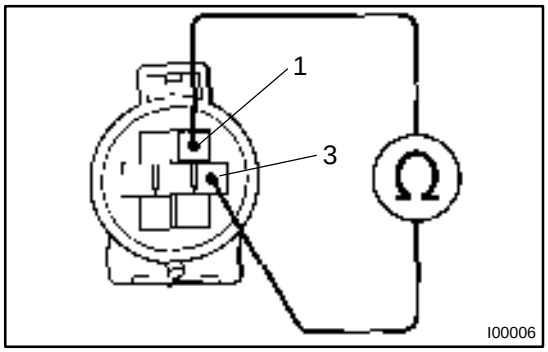

PREPARATION:

(a) Turn ignition switch OFF.

(b) Disconnect the actuator connector.

CHECK:

Measure resistance between actuator terminal 1 and 3 of actuator connector.

OK:

Resistance: 1.8 – 2.2 kΩ (25˚C)

NG → **Replace cruise control actuator.**

OK

3	Check voltage between terminals VR2 and VR3 of actuator position sensor.

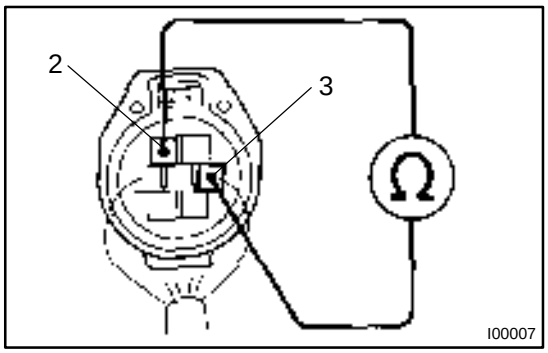

PREPARATION:

(a) Turn ignition switch ON.

(b) Connect the actuator connector.

CHECK:

Measure voltage between terminals 2 and 3 of actuator connector while turning control plate slowly by hand from the deceleration side to the acceleration side.

OK:

Voltage: 1.3 – 4.0 V

HINT:

As the control plate is turned, the voltage should increase gradually without interruption.

NG → **Replace cruise control actuator.**

OK

4	Check for open and short in harness and connector between cruise control ECU and actuator position sensor (See page IN–27).

NG → **Repair or replace harness or connector.**

OK

Check and replace cruise control ECU (See page IN–27).

DI5NQ–02

DTC	14	Actuator Mechanical Malfunction

CIRCUIT DESCRIPTION

The circuit detects the rotation position of the actuator control plate and sends a signal to the ECU.

DTC No.	Detection Item	Trouble Area
14	• Open in actuator motor circuit. • Position sensor signal valve does not change when the motor operates.	• Actuator lock: (motor, arm) • Actuator motor • Harness or connector between cruise control ECU and actuator motor • Cruise control ECU

WIRING DIAGRAM

See page DI–284.

INSPECTION PROCEDURE

1	Check cruise control actuator arm locking operation

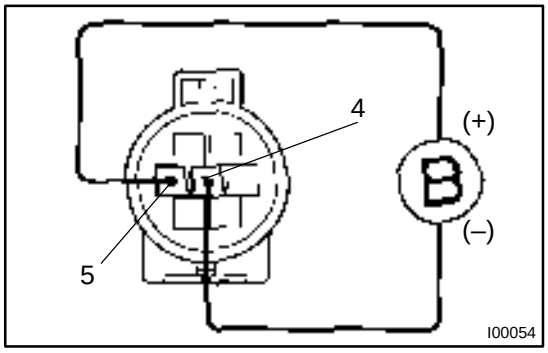

PREPARATION:

(a) Turn ignition switch OFF.

(b) Disconnect the actuator connector.

CHECK:

(a) Connect the positive (+) lead from the battery to the terminal 5 of actuator and the negative (–) lead to terminal 4.

NOTICE:

Do not connect the high tension cables to the wrong battery terminal. You will damage the cruise control actuator.

(b) Move the control plate by hand.

OK:

Control plate doesn’t move.

NG → **Replace cruise control actuator.**

OK

2	**Check cruise control actuator operation.**

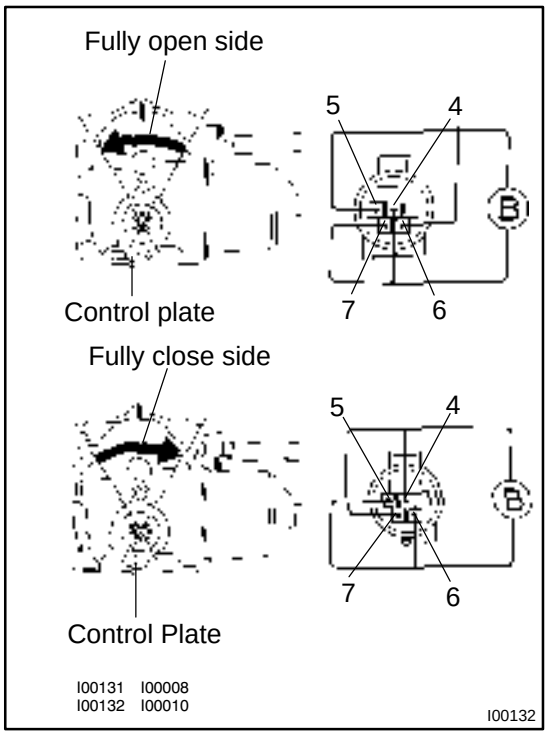

PREPARATION:

(a) Turn ignition switch OFF.

(b) Disconnect the actuator connector.

CHECK:

Connect the positive (+) lead from the battery to terminals 5 and 6 of actuator, connect the negative (–) lead to terminals 4 and 7 of actuator.

OK:

Control arm moves to full open side

CHECK:

Connect the positive (+) lead from the battery to terminals 4 and 7of actuator, connect the negative (–) lead to terminals 5 and 6 of actuator.

OK:

Control arm moves to full close side

NG → **Replace cruise control actuator.**

OK

3	**Check harness and connector between cruise control ECU and cruise control actuator (See page IN–27).**

NG → **Repair or replace harness or connector.**

OK

Check and replace cruise control ECU (See page IN–27).

DI5NR–02

DTC	21	Open in Vehicle Speed Sensor Circuit

CIRCUIT DESCRIPTION

The vehicle speed sensor circuit is sent to cruise control ECU as vehicle speed signal.
The rotor shaft is driven by the gear of the transmission.
For each rotation of the shaft, the vehicle speed sensor sends a 4 pulse signal through the combination meter to the cruise control ECU (See the following).
This signal is converted inside the combination meter and sent as a 4–pulse signal to the cruise control ECU.
The ECU calculates the vehicle speed from this pulse frequency.

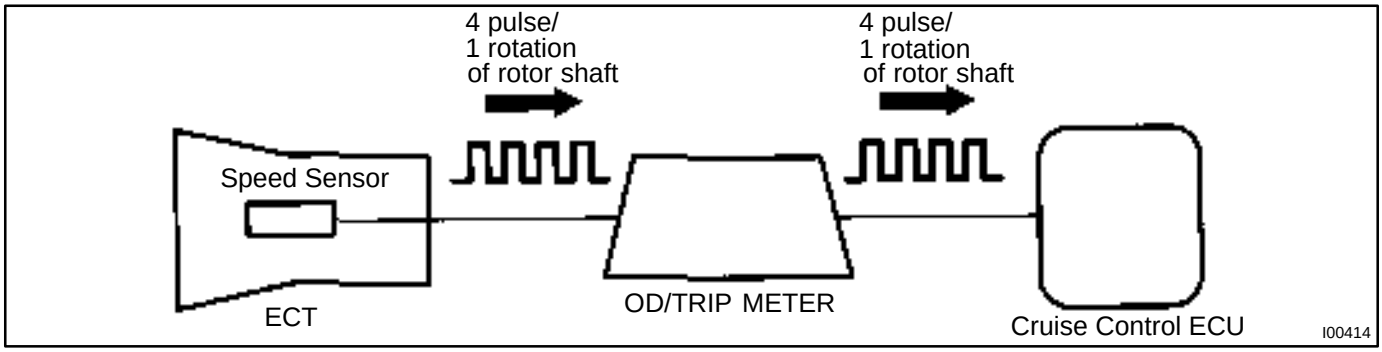

DTC No.	Detection Item	Trouble Area
21	• Speed signal is not input to the cruise control ECU while cruise control is set.	• Combination meter • Harness or connector between cruise control ECU and combination meter, combination meter and vehicle speed sensor • Vehicle speed sensor • Cruise control ECU

WIRING DIAGRAM

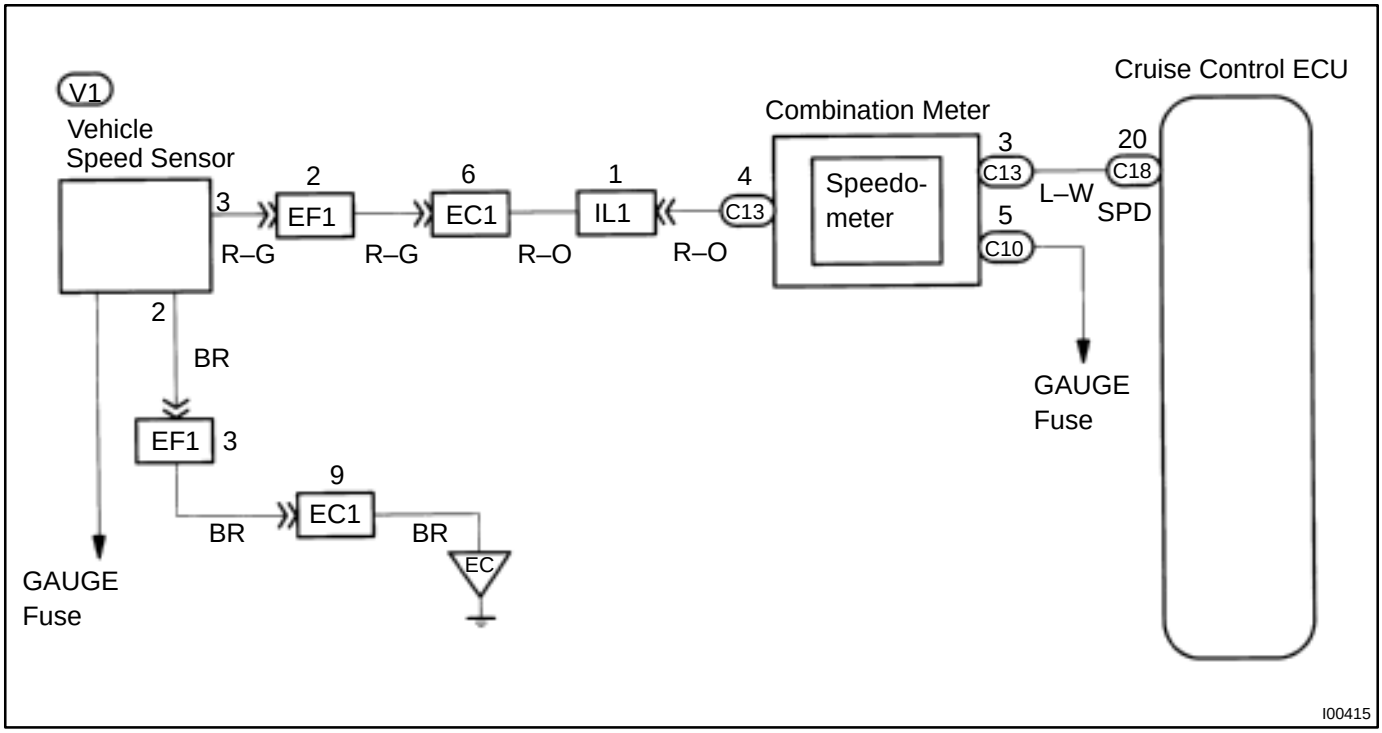

INSPECTION PROCEDURE

1	**Input signal check.**

Input Signal	Indicator Light Blinking Pattern
Drive at about 40 km/h (25 mph) or below	Light ON / OFF
Drive at about 40 km/h (25 mph) or higher	Light ON / OFF

CHECK:

(a) See input signal check on page DI–274.

(b) Check indicator light operation when driving with vehicle speed above 40 km/h (25 mph), and with vehicle speed below 40 km/h (25 mph).

OK:

Vehicle speed above 40 km/h (25 mph):
Indicator light blinks
Vehicle speed below 40 km/h (25 mph):
Indicator light stays on

OK → **Check and replace cruise control ECU (See page IN–27).**

NG

2	**Check speedometer circuit (See Combination meter troubleshooting on page BE–52).**

NG → **Repair or replace harness, connector or combination meter assembly.**

OK

3	**Check harness and connector between cruise control ECU and combination meter, combination meter and vehicle speed sensor (See page IN–27).**

NG → **Repair or replace harness or connector.**

OK

4	**Check vehicle speed sensor (See page BE–52).**

NG → **Replace vehicle speed sensor.**

OK ↓

Check and replace cruise control ECU (See page IN–27).

DI5NS–02

DTC	23	Vehicle Speed Signal Abnormal

CIRCUIT DESCRIPTION

See page DI–294.

DTC No.	Detection Item	Trouble Area
23	• Vehicle speed sensor pulse is abnormal. (When speed signal is not input to the ECU below 0.2 sec., code will be displayed.)	• Vehicle speed sensor • Cruise control ECU

WIRING DIAGRAM

See page DI–294.

INSPECTION PROCEDURE

1	**Check vehicle speed sensor (See page BE–52).**

NG → **Replace vehicle speed sensor.**

OK

Check and replace cruise control ECU (See page IN–27).

DI5NT–02

DTC	32	Control Switch Circuit (Cruise Control Switch)

CIRCUIT DESCRIPTION

This circuit carries the SET/COAST, RESUME/ACCEL and CANCEL signals (each voltage) to the ECU.

DTC No.	Detection Item	Trouble Area
32	• Short in control switch circuit.	• Cruise control switch • Harness or connector between cruise control ECU and cruise control switch, cruise control switch and body ground • Cruise control ECU

WIRING DIAGRAM

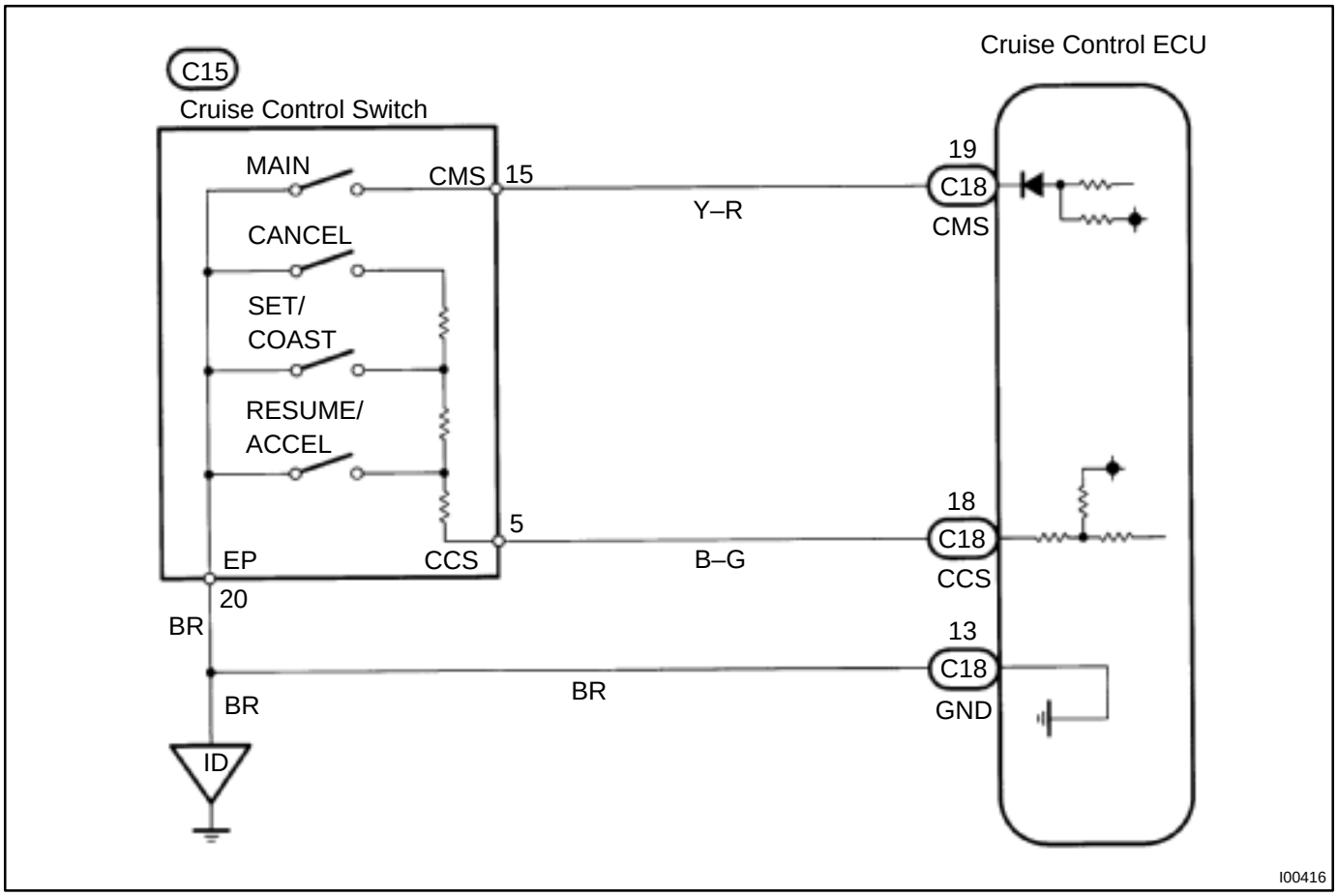

INSPECTION PROCEDURE

1	**Input signal check.**

Input Signal	Indicator Light Blinking Pattern
SET/COAST switch	ON / OFF — 2 Pulses
RESUME/ACCEL switch	ON / OFF — 3 Pulses
CANCEL switch	ON / OFF — SW OFF, SW ON

PREPARATION:

See input signal check on page DI–274.

CHECK:

Check the indicator light operation when each of the SET/COAST, RESUME/ACCEL and CANCEL is turned on.

OK:

SET/COAST, RESUME/ACCEL switch
The signals shown in the table on the left should be output when each switch is ON. The signal should disappear when the switch is turned OFF.
CANCEL switch
The indicator light goes off when the cancel switch is turned ON.

OK → **Wait and see.**

NG

2	**Check voltage between terminals CCS of cruise control ECU connector and body ground.**

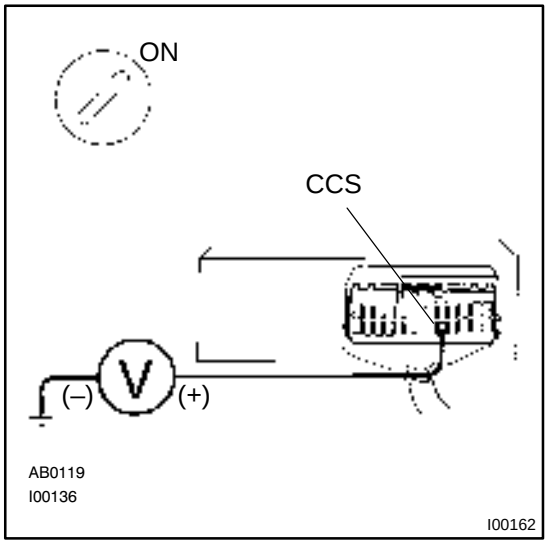

PREPARATION:

(a) Remove the ECU with connector still connected.
(b) Turn ignition switch ON.

CHECK:

Measure voltage between terminals CCS of ECU connector and body ground, when each of the SET/COAST, RESUME/ACCEL and CANCEL is turned ON.

Switch position	Resistance (Ω)
Neutral	10 – 14 V
RES/ACC	0.7 – 2.5 V
SET/COAST	2.3 – 4.6 V
CANCEL	4.1 – 7.2 V

NG → **Proceed to next circuit inspection shown on problem symptom table (See page DI–283)**

OK

3	**Check control switch.**

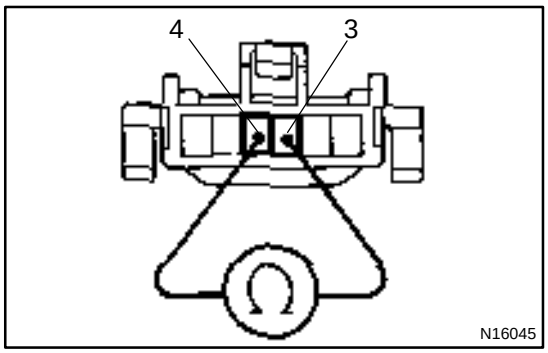

PREPARATION:

(a) Remove steering wheel center pad.

(b) Disconnect the control switch connector.

CHECK:

Measure resistance between terminals 3 and 4 of control switch connector when control switch is operated.

Switch position	Resistance (Ω)
Neutral	∞ (No continuity)
RES/ACC	50 – 80
SET/COAST	180 – 220
CANCEL	400 – 440

NG → **Replace control switch.**

OK

4	**Check harness and connector between cruise control ECU and cruise control switch, cruise control switch and body ground (See page IN–27).**

NG → **Repair or replace harness or connector.**

OK

5	**Input signal check (See step 1).**

OK → **Wait and see.**

NG

Check and replace cruise control ECU (See page IN–27).

DI5NU–02

Stop Light Switch Circuit

CIRCUIT DESCRIPTION

When the brake pedal is depressed, the stop light switch sends a signal to the ECU. When the ECU receives this signal, it cancels the cruise control.
A fail–safe function is provided so that the cancel functions normally, even if there is a malfunction in the stop light signal circuit.
The cancel conditions are: Battery positive voltage at terminal STP–
When the brake is on, battery positive voltage normally applies through the STOP fuse and stop light switch to terminal STP– of the ECU, and the ECU turns the cruise control off.
If the harness connected to terminal STP– has an open circuit, terminal STP– will have battery positive voltage and the cruise control will be turned off.
Also, when the brake is on, the magnetic clutch circuit is cut mechanically by the stop light switch, turning the cruise control off. (See page DI–286 for operation of the magnetic clutch)

WIRING DIAGRAM

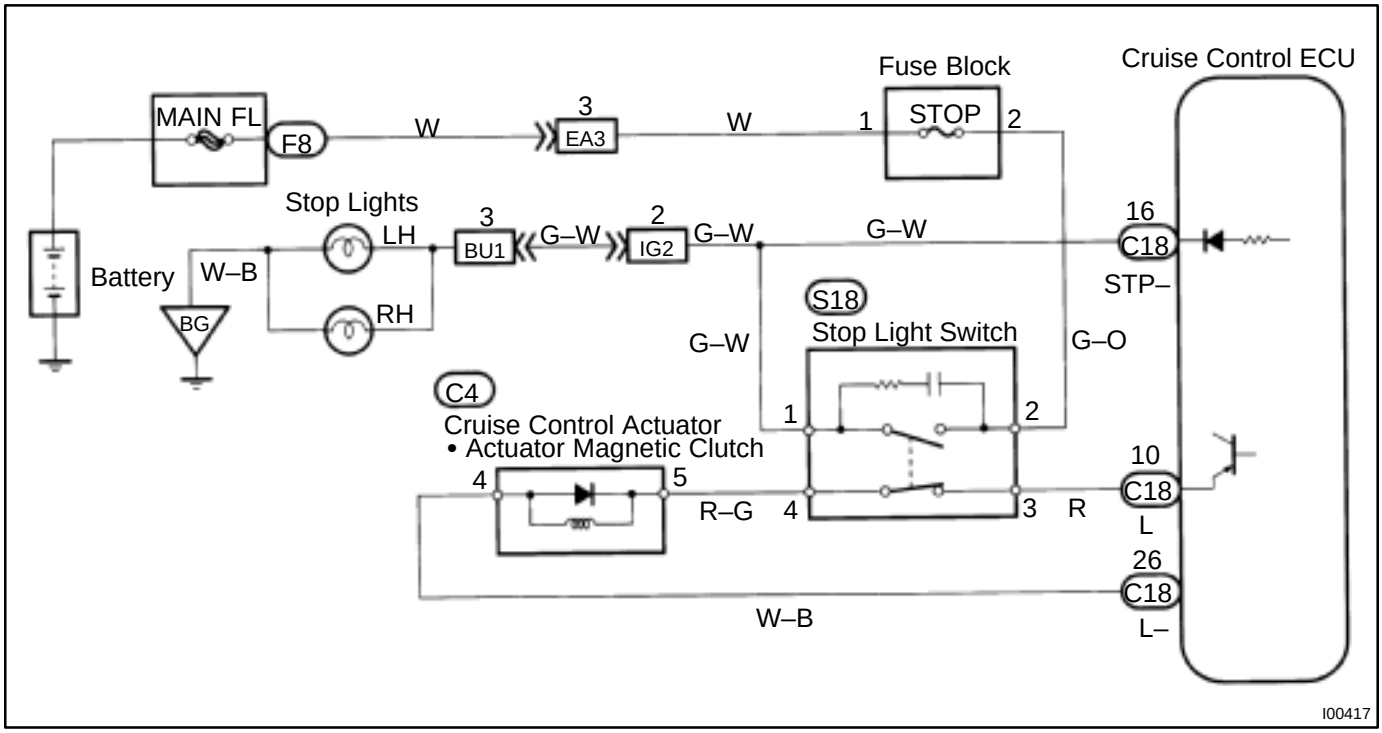

INSPECTION PROCEDURE

1	**Check operation of stop light.**

CHECK:

Check that stop light comes on when brake pedal is depressed, and turns off when brake pedal is released.

NG → **Check stop light system (See page BE–41).**

OK

2	**Input signal check.**

Input Signal	Indicator Light Blinking Pattern
Stop Light switch ON	Light: ON (SW OFF) → OFF (SW ON)

CHECK:

(a) See input signal check on DI–274.

(b) Check the indicator light when the brake pedal is depressed.

OK:

The indicator light goes off when the brake pedal is depressed.

OK → **Proceed to next circuit inspection shown on problem symptom table (See page DI–283).**

NG

3	**Check voltage between terminal STP– of cruise control ECU connector and body ground.**

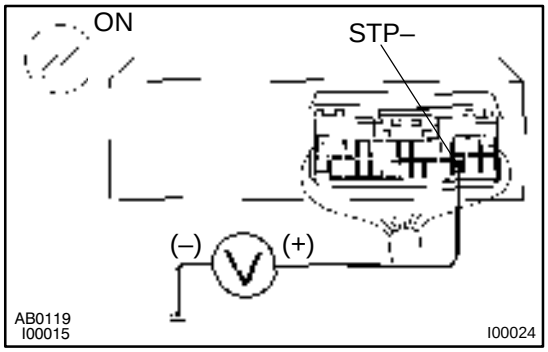

PREPARATION:

(a) Remove the ECU with connectors still connected.

(b) Turn ignition switch ON.

CHECK:

Measure voltage between terminal STP– of cruise control ECU connector and body ground, when the brake pedal is depressed and released.

OK:

Depressed	10 – 14 V
Released	Below 1 V

OK → **Proceed to next circuit inspection shown on problem symptom table (See page DI–283).**

NG

4	**Check for open in harness and connectors between terminal STP– of cruise control ECU and stop light switch (See page IN–27).**

NG → **Repair or replace harness or connector.**

OK

Check and replace cruise control ECU (See page IN–27).

DI5NV–02

Idle Switch Circuit

CIRCUIT DESCRIPTION

When the idle switch in turned ON, a signal is sent to the ECU. The ECU uses this signal to correct the discrepancy between the throttle valve position and the actuator position sensor value to enable accurate cruise control at the set speed. If the idle switch is malfunctioning, problem symptoms also occur in the engine, so also inspect the engine.

WIRING DIAGRAM

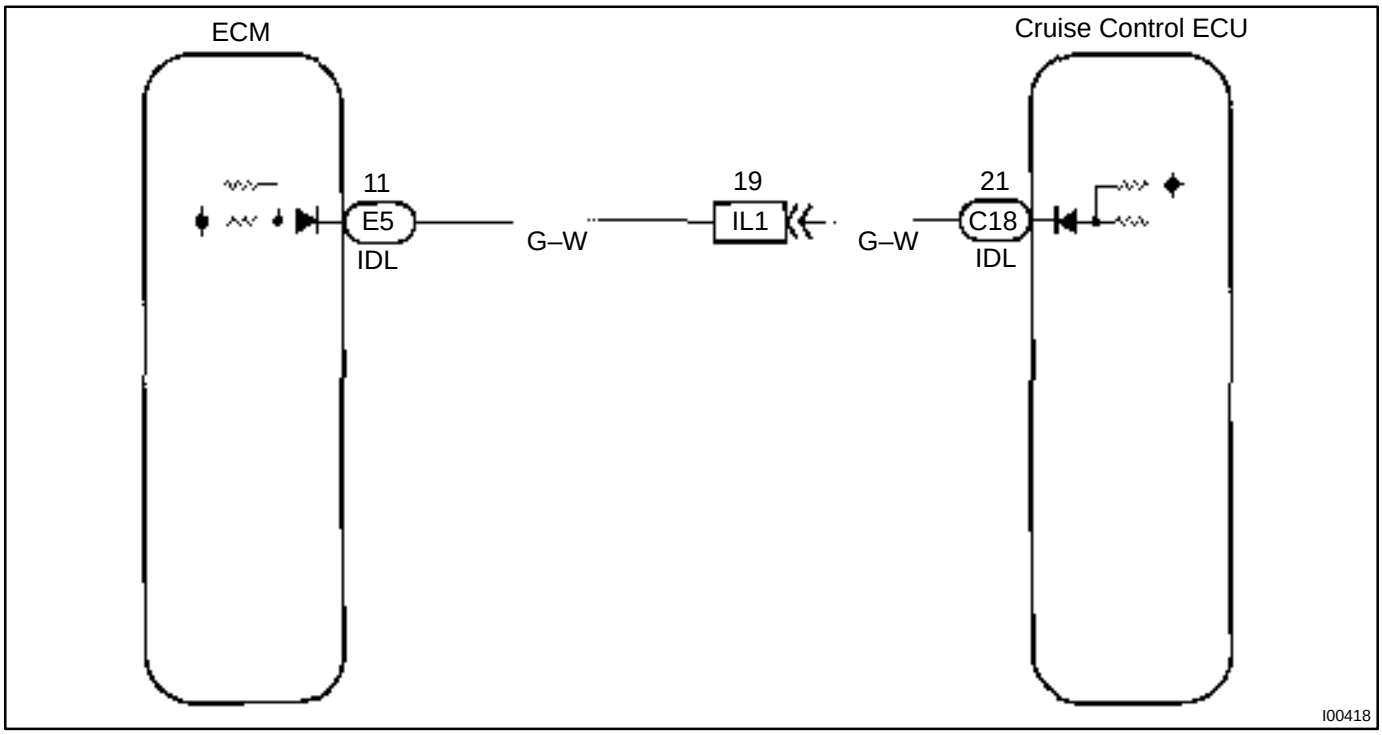

INSPECTION PROCEDURE

1	**Check voltage between terminal IDL of cruise control ECU connector and body ground.**

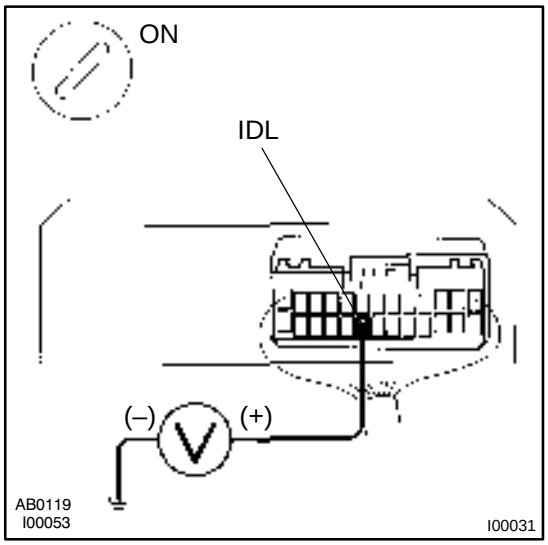

PREPARATION:

(a) Remove the ECU with connector still connected.
(b) Disconnect the ECM and ABS ECU connectors.
(c) Turn ignition switch ON.

CHECK:

Measure voltage between terminal IDL of ECU connector and body ground when the throttle valve is fully closed and fully opened.

OK:

Throttle valve position	Voltage
Fully opened	10 – 14 V
Fully closed	Below 2 V

OK → **Proceed to next circuit inspection shown on problem symptom table (See page DI–283).**

NG

2	**Check harness and connector between ECM and throttle position sensor (See page IN–27).**

NG → **Repair or replace harness or connector.**

OK

3	**Check throttle position sensor circuit (See page DI–35).**

NG → **Replace throttle position sensor.**

OK

4	**Check throttle position sensor.**

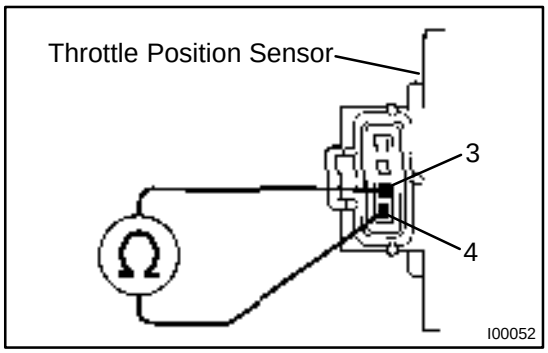

PREPARATION:
Disconnect the throttle position sensor connector.
CHECK:
Measure resistance between terminals 3 and 4 of throttle position sensor connector when the throttle valve is fully closed and fully opened.
OK:

Throttle valve position	Resistance
Fully opened	1 MΩ or higher
Fully closed	Below 2.3 kΩ

NG → **Replace throttle position sensor.**

OK

5	**Check for open and short in harness and connector between cruise control ECU and throttle position sensor, throttle position sensor and body ground (See page IN–27).**

NG → **Repair or replace harness or connector.**

OK

Check and replace cruise control ECU (See page IN–27).

DI5NW–02

Electronically Controlled Transmission Communication Circuit

CIRCUIT DESCRIPTION

When driving uphill under cruise control, in order to reduce shifting due to ON–OFF overdrive operation and to provide smooth driving, when down shifting in the electronically controlled transmission occurs, a signal to prevent upshift until the end of the up hill slope is sent from the cruise control ECU to the electronically controlled transmission.

Terminal ECT of the cruise control ECU detects the shift change signal (output to electronically controlled transmission No. 2 solenoid) from the ECM.

If vehicle speed down, also when terminal ECT of the cruise control ECU receives down shifting signal, it sends a signal from terminal OD to ECM to cut overdrive until the end of the uphill slope, and the gear shifts are reduced and gear shift points in the electronically controlled transmission are changed.

WIRING DIAGRAM

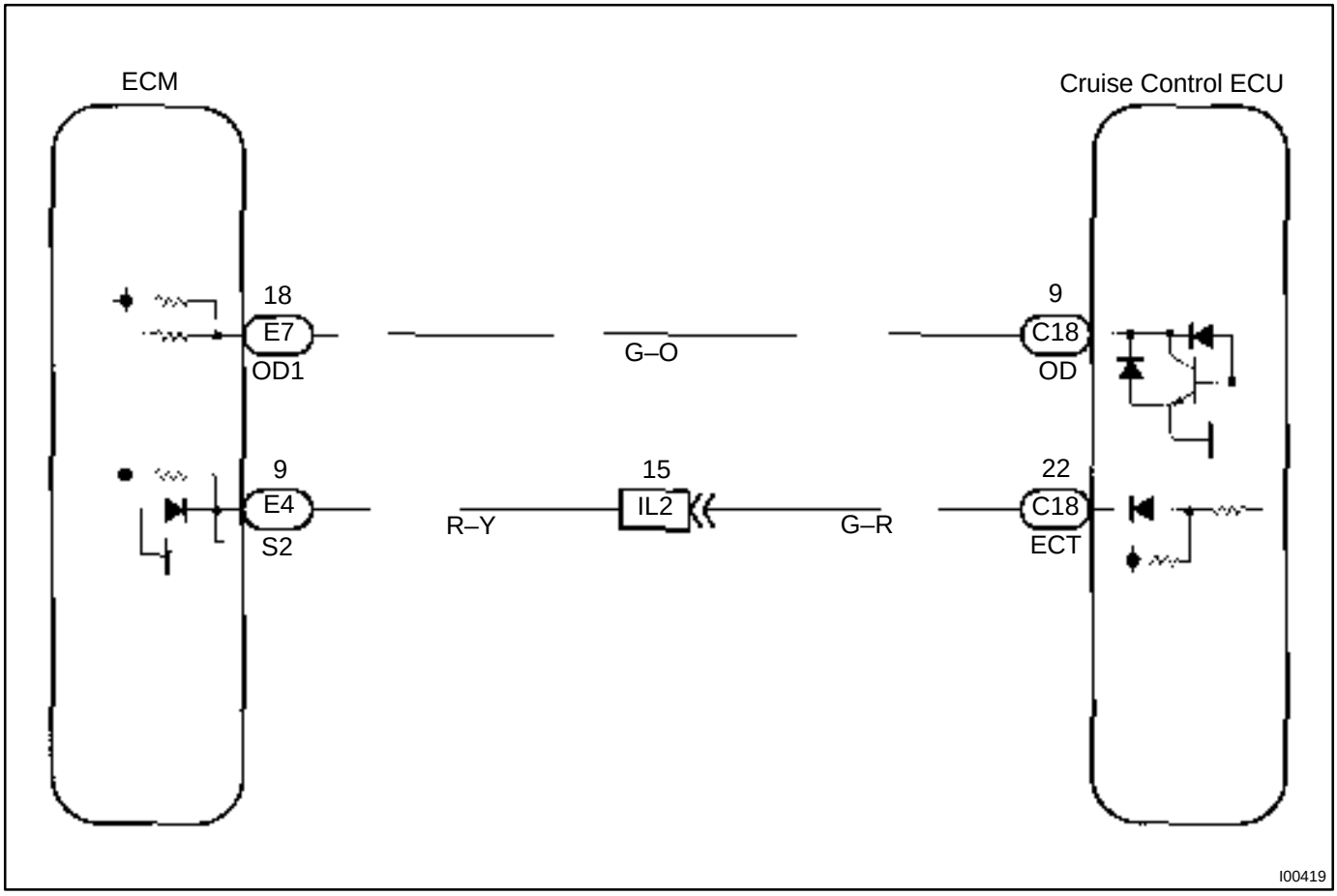

INSPECTION PROCEDURE

1	**Check operation of overdrive.**

PREPARATION:
Test drive after engine warms up.
CHECK:
Check that overdrive ON ↔ OFF occurs with operation of OD switch ON–OFF.

NG → **Check and repair electronically controlled transmission (See page DI–122).**

OK

2	**Check voltage between terminal OD of harness side connector of cruise control ECU and body ground.**

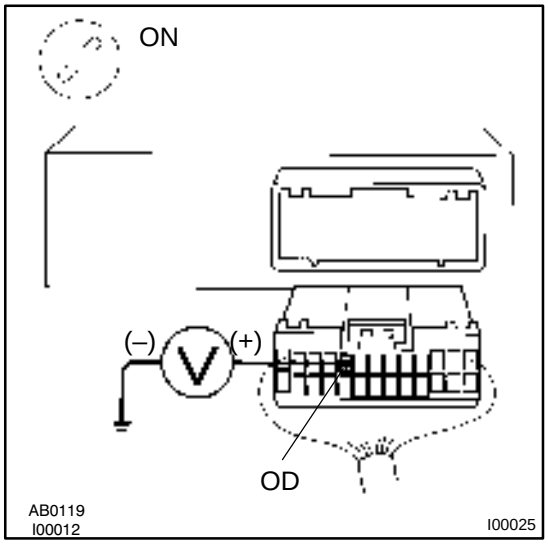

PREPARATION:
(a) Remove the ECU with connector still connected.
(b) Turn ignition switch ON.
(c) Disconnect the ECU connector.
CHECK:
Measure voltage between terminal OD of harness side connector of ECU and body ground.
OK:
Voltage: 10 – 14 V

NG → **Go to step 5.**

OK

3	**Check voltage between terminal ECT of cruise control ECU connector and body ground (On test drive).**

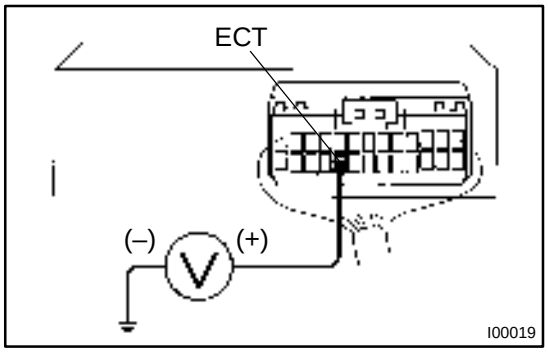

PREPARATION:

(a) Connect the ECU connector.

(b) Test drive after engine warms up.

CHECK:

Check voltage between terminal ECT of ECU connector and body ground when OD switch is ON and OFF.

OK:

OD switch position	Voltage
ON	8 – 14 V
OFF	Below 0.5 V

OK → **Proceed to next circuit inspection shown on problem symptom table (See page DI–283).**

NG

4	**Check harness and connector between terminal ECT of cruise control ECU and electronically controlled transmission solenoid (See page IN–27).**

NG → **Repair or replace harness or connector.**

OK

Check and replace cruise control ECU (See page IN–27).

5	**Check harness and connector between terminal OD of cruise control ECU and terminal OD1 of ECM (See page IN–27).**

NG → **Repair or replace harness or connector.**

OK

Check and replace cruise control ECU (See page IN–27).

DI5NX–02

Park/Neutral Position Switch Circuit

CIRCUIT DESCRIPTION

When the shift position is put in except D position, a signal is sent from the park/neutral position switch to the ECU. When this signal is input during cruise control driving, the ECU cancels the cruise control.

WIRING DIAGRAM

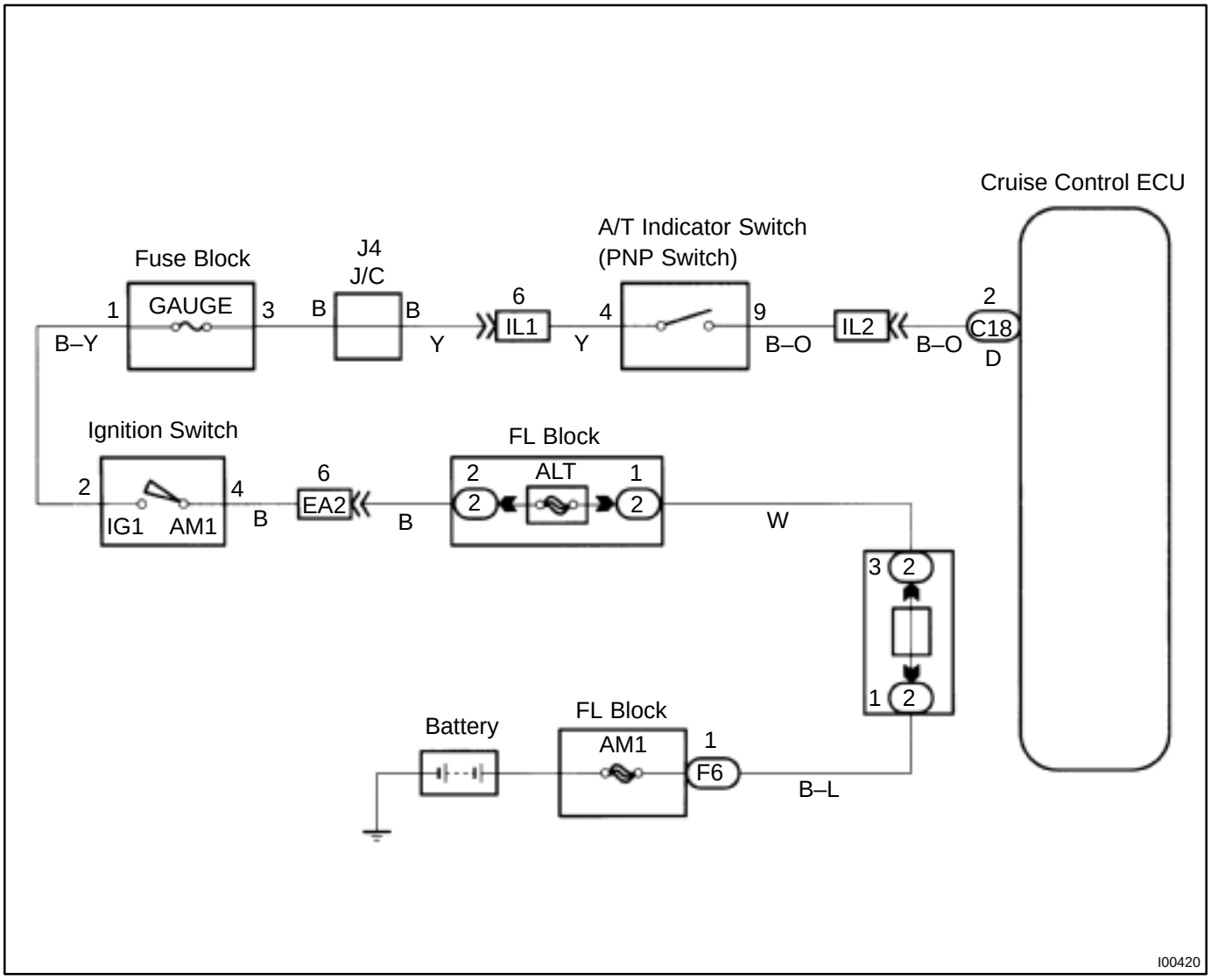

INSPECTION PROCEDURE

1	**Check starter operation.**

CHECK:

Check that the starter operates normally and that the engine starts.

NG → **Proceed to engine troubleshooting (See page DI–1).**

OK

2	**Input signal check.**

Input Signal	Indicator Light Blinking Pattern
Turn PNP switch OFF (Shift to except D position)	Light: ON (SW ON) → OFF (SW OFF)

PREPARATION:

See input signal check on page DI–274.

CHECK:

Check the indicator light when shifting into except D position.

OK:

The indicator light goes off when shifting into except D position.

OK → **Proceed to next circuit inspection shown on problem symptom table (See page DI–283).**

NG

3	**Check voltage between terminal D of cruise control ECU connector and body ground.**

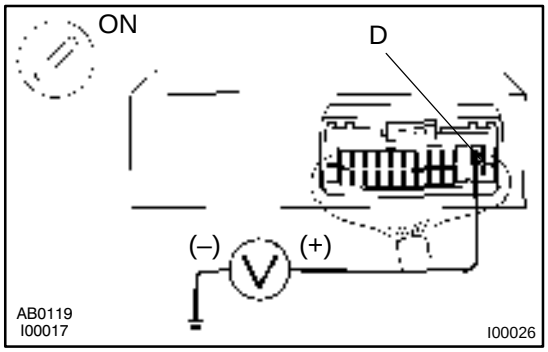

PREPARATION:

Turn ignition switch ON.

CHECK:

Measure voltage between terminal D of ECU connector and body ground when shifting into D position and other positions.

OK:

Shift Position	Voltage
D position	10 – 14 V
Other positions	Below 1 V

OK → **Proceed to next circuit inspection shown on problem symptom table (See page DI–283).**

NG

4	**Check harness and connector between cruise control ECU and park/neutral position switch (See page IN–27).**

NG → **Repair or replace harness or connector.**

OK

Check and replace cruise control ECU (See page IN–27).

DI5NY–02

ECU Power Source Circuit

CIRCUIT DESCRIPTION

The ECU power source supplies power to the actuator and sensors, etc.. When terminal GND and the cruise control ECU case are grounded.

WIRING DIAGRAM

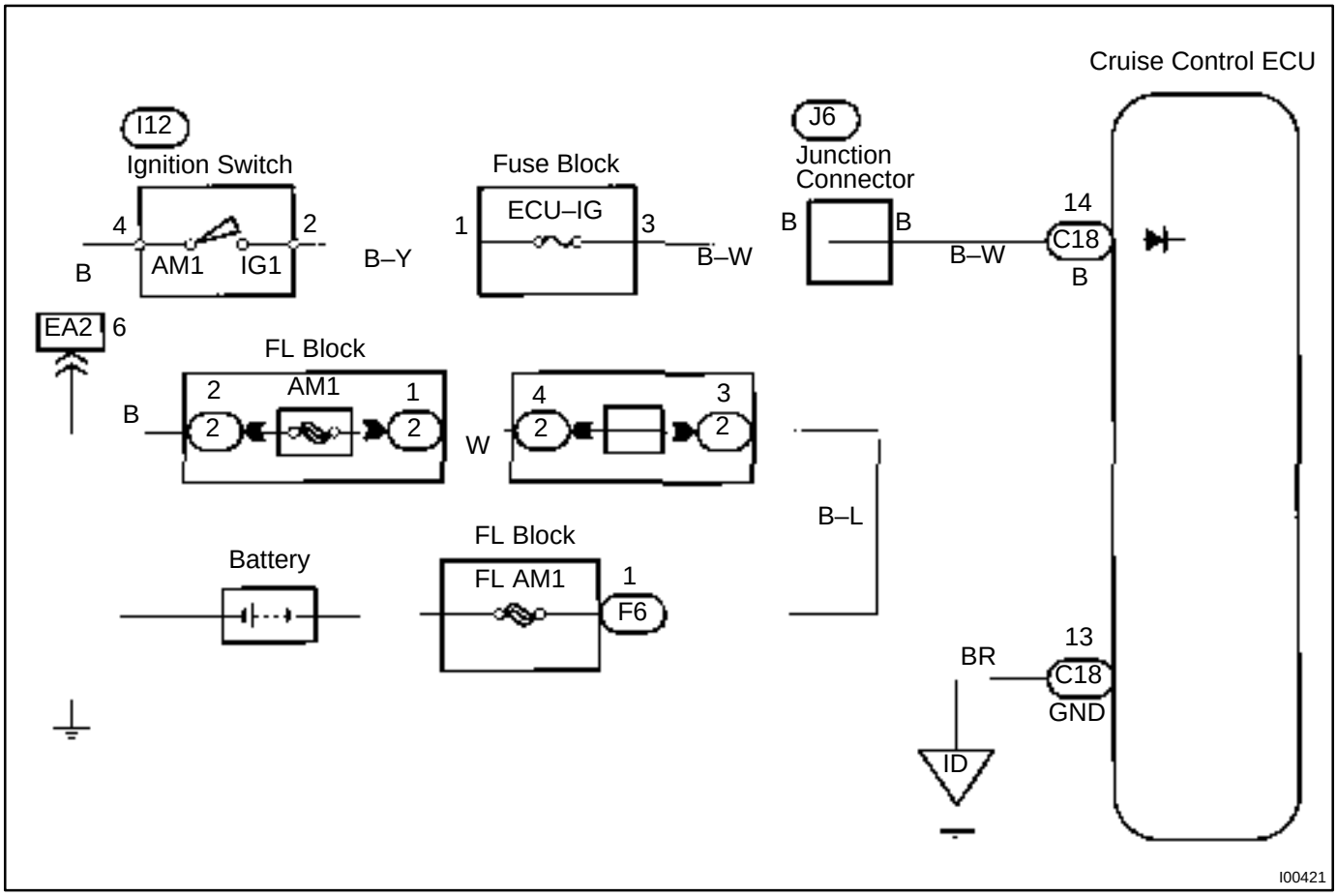

INSPECTION PROCEDURE

1	Check ECU–B fuse.

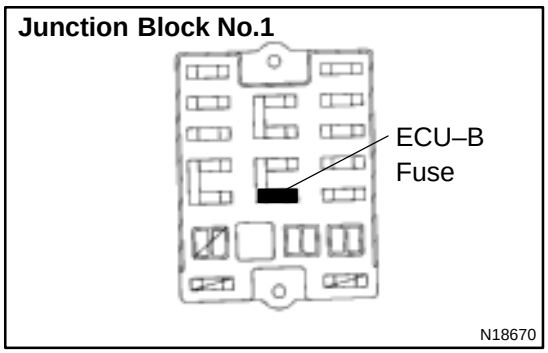

PREPARATION:
Remove the ECU–B fuse from instrument panel fuse block.
CHECK:
Check continuity of ECU–B fuse.
OK:
Continuity

NG → **Check for short in all the harness and components connected to ECU–B fuse.**

OK

2	Check voltage between terminals B and GND of cruise control ECU connector.

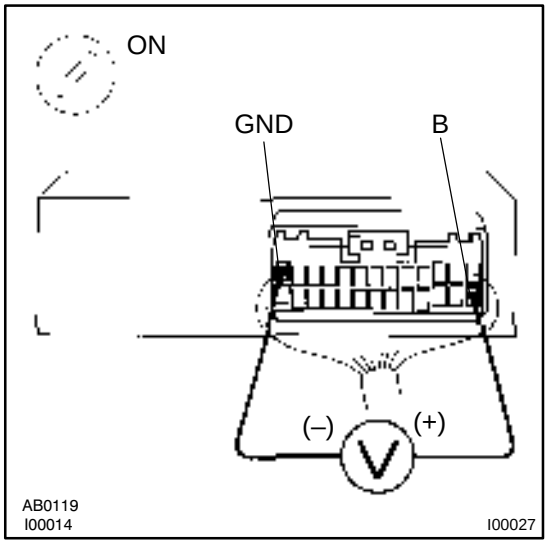

PREPARATION:
(a) Remove the ECU with connector still connected.
(b) Turn ignition switch ON.
CHECK:
Measure voltage between terminals B and GND of ECU connector.
OK:
Voltage: 10 – 14 V

OK → **Proceed to next circuit inspection shown on problem symptom table (See page DI–283).**

NG

3	**Check resistance between terminal GND of cruise control ECU connector and body ground.**

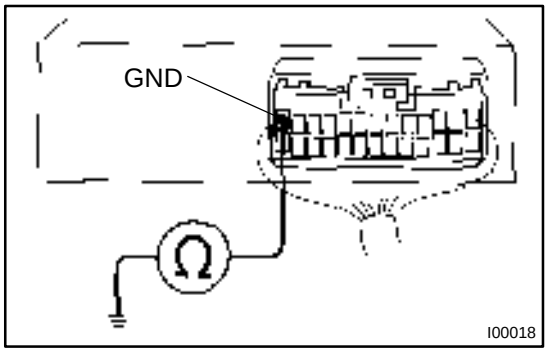

CHECK:

Measure resistance between terminal GND of ECU connector and body ground.

OK:

Resistance: Below 1 Ω

NG → **Repair or replace harness or connector.**

OK

Check and repair harness and connector between cruise control ECU and battery (See page IN–27).

DI5NZ–02

Back–up Power Source Circuit

CIRCUIT DESCRIPTION

The ECU back–up power source provides power even when the ignition is off and is used for DTC memory, etc..

WIRING DIAGRAM

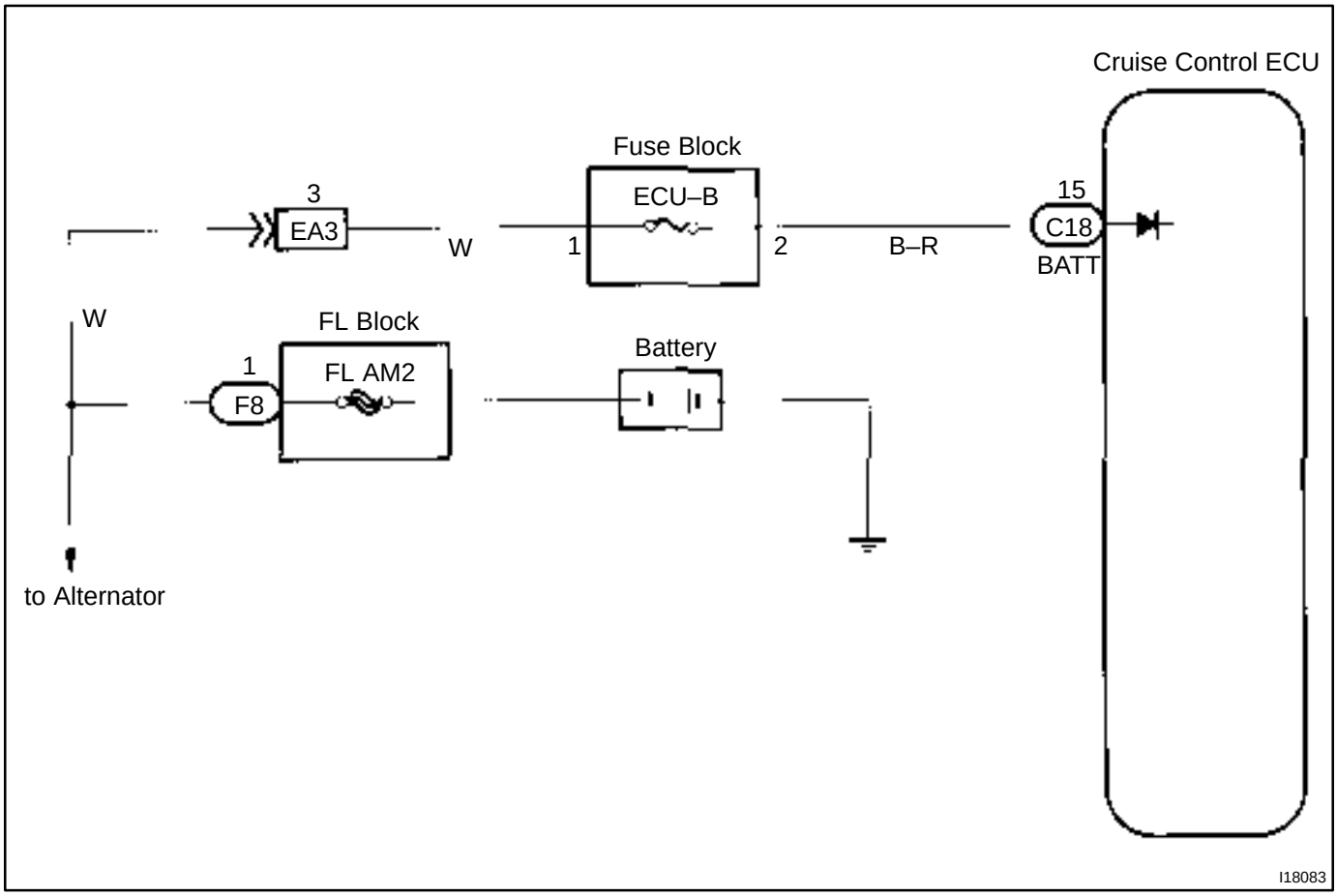

INSPECTION PROCEDURE

1	Check ECU–IG fuse.

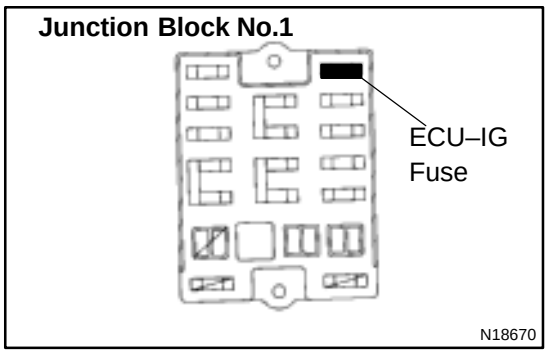

PREPARATION:
Remove the ECU–IG fuse from relay block No.2.
CHECK:
Check continuity of ECU–IG fuse.
OK:
Continuity

NG → **Check for short in all the harness and components connected to the ECU–IG fuse.**

OK

2	Check voltage between terminal BATT of cruise control ECU connector and body ground.

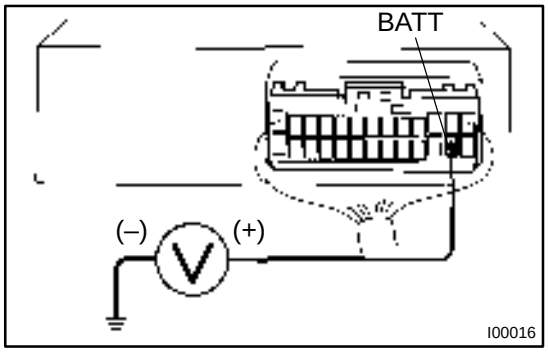

PREPARATION:
Remove the ECU with connector still connected.
CHECK:
Measure voltage between terminal BATT of ECU connector and body ground.
OK:
Voltage: 10 – 14 V

OK → **Proceed to next circuit inspection shown on problem symptom table (See page DI–283).**

NG

Check and repair harness and connector between battery and cruise control ECU (See page IN–27).

DI5O0–02

Main Switch Circuit (Cruise Control Switch)

CIRCUIT DESCRIPTION

When the cruise control main switch is turned off, the cruise control does not operate.

WIRING DIAGRAM

See page DI–298.

INSPECTION PROCEDURE

1	**Check voltage between terminal CMS of cruise control ECU connector and body ground.**

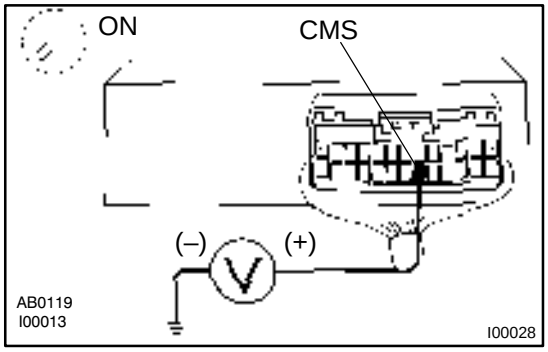

PREPARATION:

(a) Remove the ECU with connector still connected.

(b) Turn ignition switch ON.

CHECK:

Measure voltage between terminal CMS of cruise control ECU connector when main switch is held on and off.

OK:

Main switch	Voltage
OFF	10 – 14 V
ON	Below 2 V

OK → **Proceed to next circuit inspection shown on problem symptom table (See page DI–283).**

NG

2	**Check main switch continuity.**

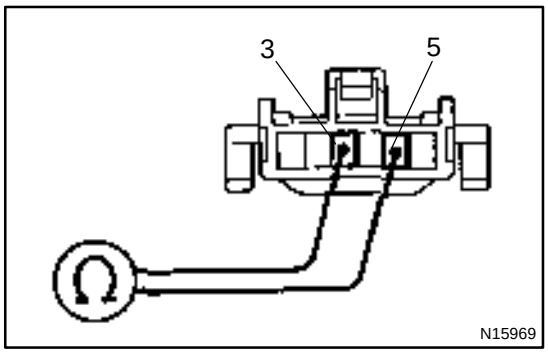

PREPARATION:

(a) Remove steering wheel center pad (See page RS–8).

(b) Disconnect the control switch connector.

CHECK:

Check continuity between terminals 3 and 5 of control switch connector when main switch is held on and off.

OK:

Switch position	Tester connection	Specified condition
OFF	3 – 5	No continuity
Hold ON	3 – 5	Continuity

NG → **Replace control switch.**

OK

3	**Check harness and connector between cruise control ECU and main switch (See page IN–27).**

NG → **Repair or replace harness or connector.**

OK

Check and replace cruise control ECU (See page IN–27).

DI5O1–02

CRUISE MAIN Indicator Light Circuit

CIRCUIT DESCRIPTION

When the cruise control main switch is turned ON, CRUISE MAIN indicator light lights up.

WIRING DIAGRAM

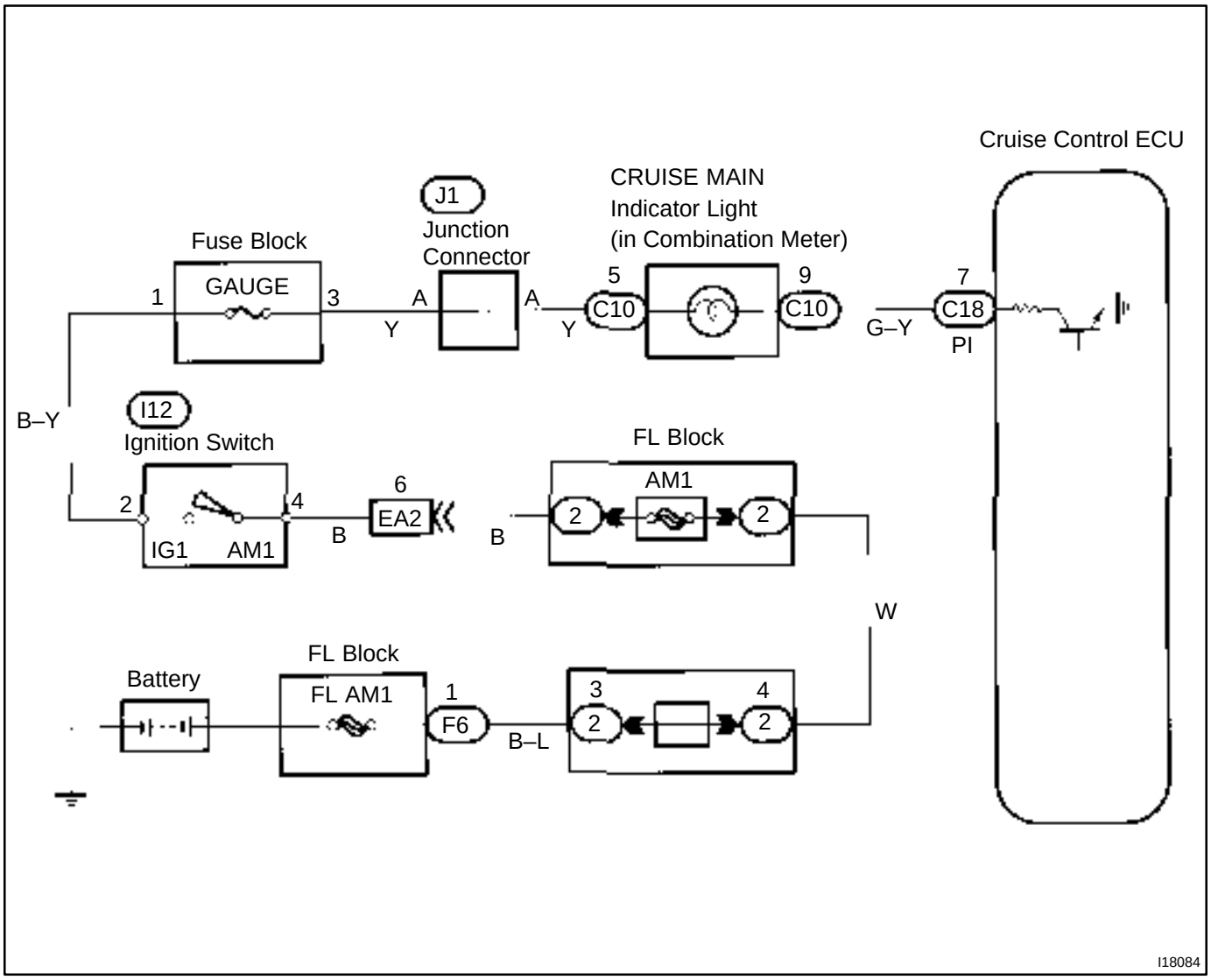

INSPECTION PROCEDURE

1	Check voltage between terminals PI and GND of cruise control ECU connector.

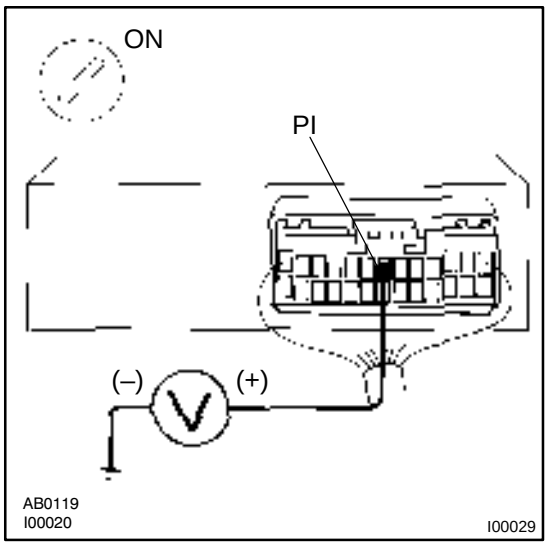

PREPARATION:
Tun ignition switch ON.

CHECK:
Measure voltage between terminals PI and GND of ECU connector when main switch on and off.

OK:

Switch position	Voltage
OFF	10 – 16 V
ON	Below 1.2 V

OK → **Proceed to next circuit inspection shown on problem symptom table (See page DI–283).**

NG

2	Check combination meter (See page BE–52).

NG → **Replace combination meter.**

OK

Check and replace cruise control ECU (See page IN–27).

DI5O2–02

Diagnosis Circuit

CIRCUIT DESCRIPTION

This circuit sends a signal to the ECU that DTC output is required.

WIRING DIAGRAM

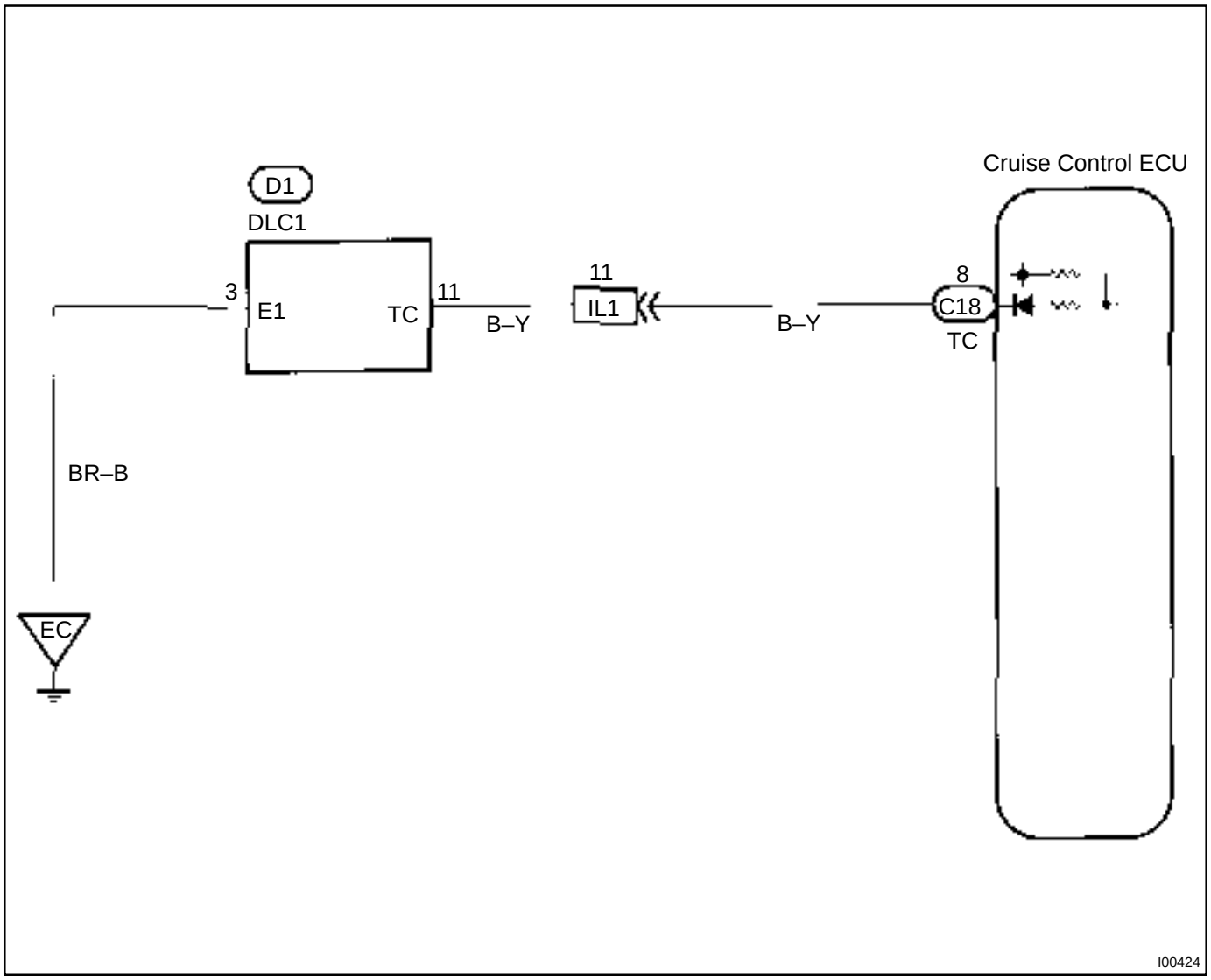

INSPECTION PROCEDURE

1	**Check voltage between terminals Tc and E_1 of DLC1.**

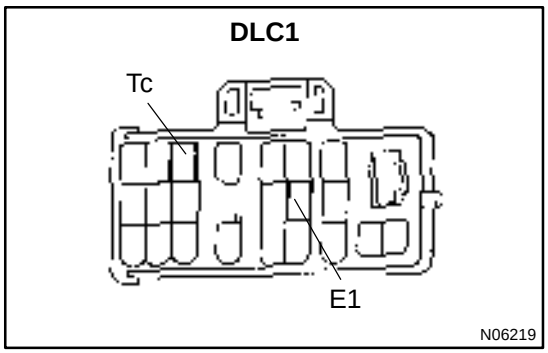

PREPARATION:

Turn ignition switch ON.

CHECK:

Measure voltage between terminals Tc and E_1 of DLC1.

OK:

Voltage: 10 – 14 V

OK → **Proceed to next circuit inspection shown on problem symptom table (See page DI–283).**

NG

2	**Check harness and connector between cruise control ECU and DLC1, DLC1 and body ground (See page IN–27).**

NG → **Repair or replace harness or connector.**

OK

Check and replace cruise control ECU (See page IN–27).

DI5O3–02

Actuator Control Cable

INSPECTION PROCEDURE

1	**Check actuator control cable.**

OK:

(a) Check that the actuator, control cable throttle link are properly installed and that the cable and link are connected correctly.

(b) Check that the actuator and bell crank are operating smoothly.

(c) Check that the cable is not loose or too tight.

OK:

Freeplay: Less than 10 mm

HINT:

- If the control cable is very loose, the vehicle's loss of speed going uphill will be large.
- If the control cable is too tight, the idle RPM will become high.

CO/HC

EM1E0–03

INSPECTION

HINT:
This check is used only to determine whether or not the idle CO/HC complies with regulations.

1. INITIAL CONDITIONS

(a) Engine at normal operating temperature
(b) Air cleaner installed
(c) All pipes and hoses of air induction system connected
(d) All accessories switched OFF
(e) All vacuum lines properly connected

HINT:
All vacuum hoses for EGR systems, etc. should be properly connected.

(f) SFI system wiring connectors fully plugged
(g) Ignition timing set correctly
(h) Transmission in neutral position
(i) Tachometer and CO/HC meter calibrated by hand

2. START ENGINE

3. RACE ENGINE AT 2,500 RPM FOR APPROX. 180 SECONDS

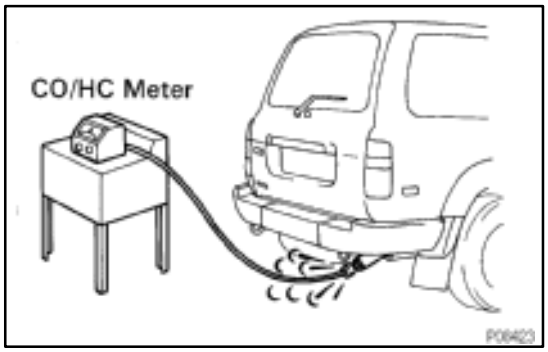

4. INSERT CO/HC METER TESTING PROBE AT LEAST 40 cm (1.3 ft) INTO TAILPIPE DURING IDLING

5. IMMEDIATELY CHECK CO/HC CONCENTRATION AT IDLE AND/OR 2,500 RPM

HINT:
When doing the 2 mode (2,500 rpm and idle) test, follow the measurement order prescribed by the applicable local regulations.

If the CO/HC concentration does not comply with regulations, troubleshoot in the order given below.

See the table below for possible causes, and then inspect and correct the applicable causes if necessary.

HC	CO	Problems	Causes
High	Normal	Rough idle	1. Faulty ignitions: • Incorrect timing • Fouled, shorted or improperly gapped plugs • Open or crossed high-tension cords • Cracked distributor cap 2. Incorrect valve clearance 3. Leaky EGR valve 4. Leaky intake and exhaust valves 5. Leaky cylinder
High	Low	Rough idle (Fluctuating HC reading)	1. Vacuum leaks: • PCV hose • EGR valve • Intake manifold • Air intake chamber • Throttle body • IAC valve • Brake booster line 2. Lean mixture causing misfire
High	High	Rough idle (Black smoke from exhaust)	1. Restricted air filter 2. Faulty SFI systems: • Faulty pressure regulator • Clogged fuel return line • Defective ECT sensor • Faulty ECM • Faulty injector • Faulty throttle position sensor • Faulty MAF meter

V06507

COMPRESSION

EM0KR–06

INSPECTION

HINT:

If there is lack of power, excessive oil consumption or poor fuel economy, measure the compression pressure.

1. WARM UP AND STOP ENGINE

Allow the engine to warm up to normal operating temperature.

2. DISCONNECT DISTRIBUTOR CONNECTOR

3. REMOVE SPARK PLUGS (See page IG–1)

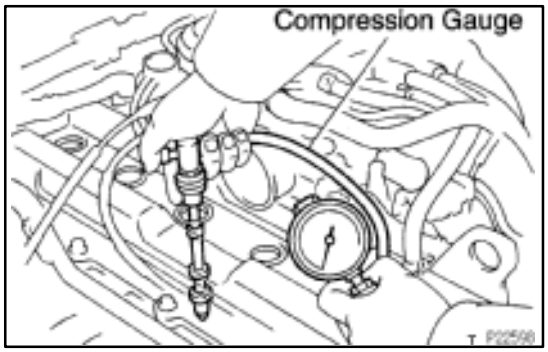

4. CHECK CYLINDER COMPRESSION PRESSURE

(a) Insert a compression gauge into the spark plug hole.

(b) Fully open the throttle.

(c) While cranking the engine, measure the compression pressure.

HINT:

Always use a fully charged battery to obtain engine speed of 250 rpm or more.

(d) Repeat steps (a) through (c) for each cylinder.

NOTICE:

This measurement must be done in as short a time as possible.

Compression pressure:
1,176 kPa (12.0 kgf/cm^2, 171 psi) or more
Minimum pressure: 883 kPa (9.0 kgf/cm^2, 128 psi)
Difference between each cylinder:
98 kPa (1.0 kgf/cm^2, 14 psi) or less

If the cylinder compression in one or more cylinders is low, pour a small amount of engine oil into the cylinder through the spark plug hole and repeat steps (a) through (c) for cylinders with low compression.

- If adding oil helps the compression, it is likely that the piston rings and/or cylinder bore are worn or damaged.
- If pressure stays low, a valve may be sticking or seating is improper, or there may be leakage past the gasket.

5. REINSTALL SPARK PLUGS (See page IG–1)

6. RECONNECT DISTRIBUTOR CONNECTOR

VALVE CLEARANCE

EM1FZ–02

INSPECTION

HINT:

Inspect and adjust the valve clearance when the engine is cold.

1. DRAIN ENGINE COOLANT

2. REMOVE THROTTLE BODY (See page SF–41)

3. DISCONNECT ENGINE WIRE AND HEATER VALVE FROM COWL PANEL

4. DISCONNECT HIGH–TENSION CORDS FROM SPARK PLUGS (See page IG–1)

5. REMOVE CYLINDER HEAD COVER

Remove the 13 bolts, cylinder head cover and gasket.

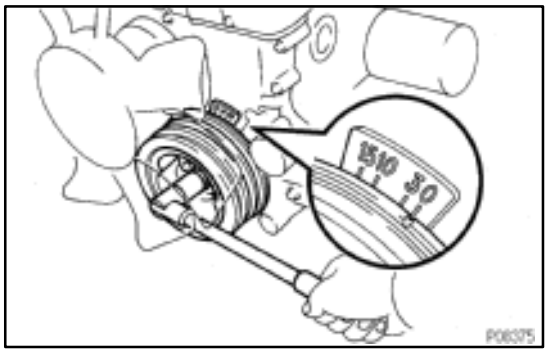

6. SET NO.1 CYLINDER TO TDC/COMPRESSION

(a) Turn the crankshaft pulley, and align its groove with the timing mark ”0” of the timing chain cover.

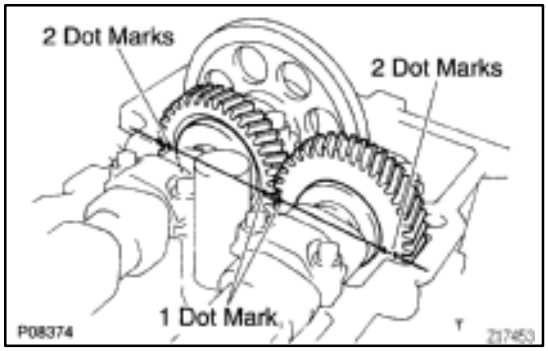

(b) Check that the timing marks (1 and 2 dots) of the camshaft drive and driven gears are in straight line on the cylinder head surface as shown in the illustration.If not, turn the crankshaft 1 revolution (360˚) and align the marks as above.

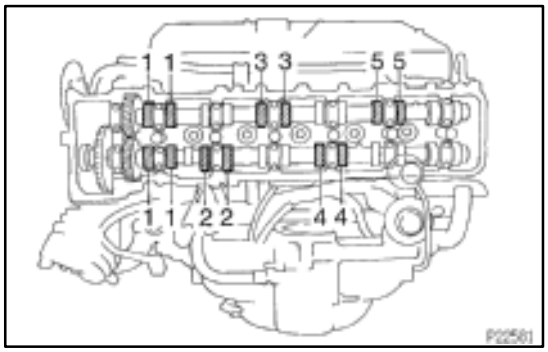

7. INSPECT VALVE CLEARANCE

(a) Check only the valves indicated.

- Using a thickness gauge, measure the clearance between the valve lifter and camshaft.
- Record the out–of–specification valve clearance measurements. They will be used later to determine the required replacement adjusting shim.

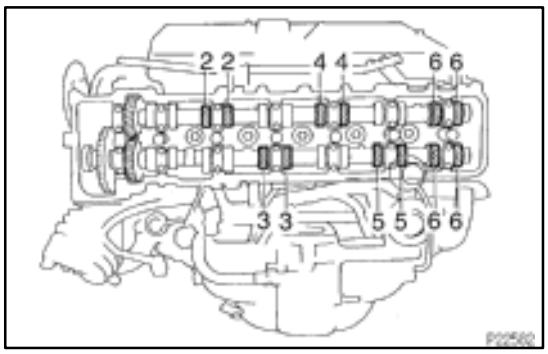

Valve clearance (Cold):
Intake
0.15 – 0.25 mm (0.006 – 0.010 in.)
Exhaust
0.25 – 0.35 mm (0.010 – 0.014 in.)

(b) Turn the crankshaft pulley 1 revolution (360˚) and align the its groove with timing mark ”0” of the timing chain cover.

(c) Check only the valves indicated as shown. Measure the valve clearance. (See procedure in step (a) above)

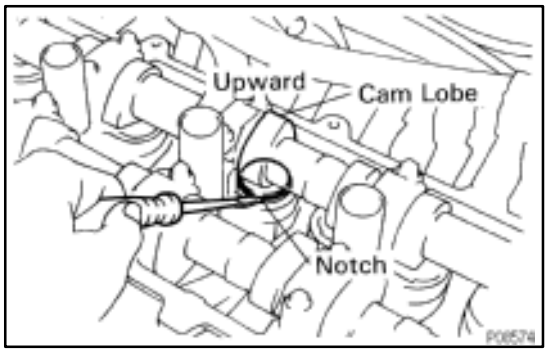

8. ADJUST VALVE CLEARANCE (EXCEPT FOR REAR VALVES OF NO.6 CYLINDER)

(a) Remove the adjusting shim.
- Turn the crankshaft to position the cam lobe of the camshaft on the adjusting valve upward.
- Position the notch of the valve lifter toward the spark plug side.

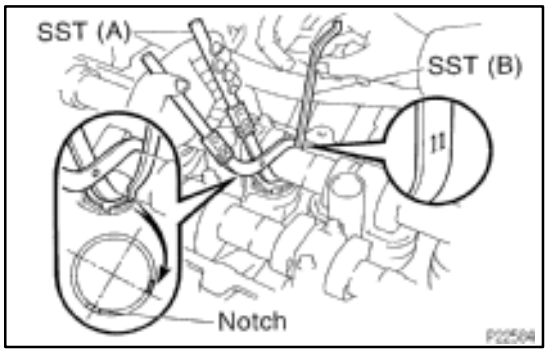

- Using SST (A), press down the valve lifter and place SST (B) between the camshaft and valve lifter flange. Remove SST (A).

SST 09248–06020, 09248–55050 (09248–05510)

HINT:
- Apply SST (B) at slight angle on the side marked with ”11”, at the position shown in the illustration.
- When SST (B) is inserted too deeply, it will get pinched by the shim. To prevent it from being stuck, insert it shallowly from the outside of the cylinder head, at a slight angle.
  - Remove the adjusting shim with a small screwdriver and magnetic finger.

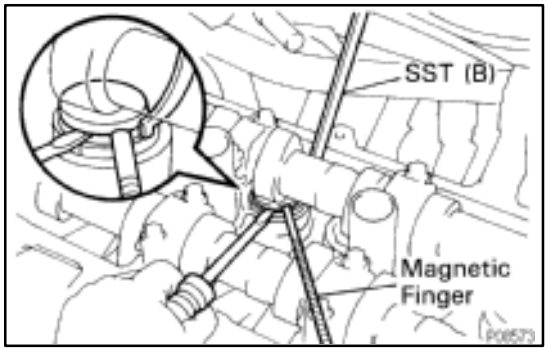

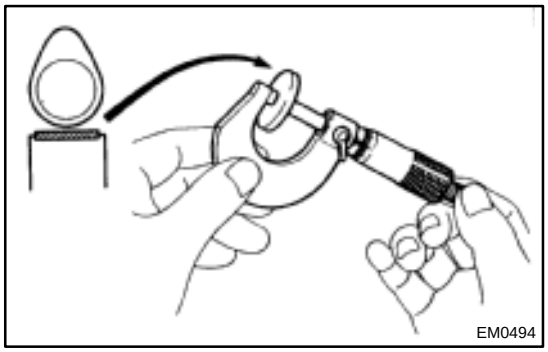

(b) Determine the replacement adjusting shim size by following the Formula or Charts:
- Using a micrometer, measure the thickness of the removed shim.
- Calculate the thickness of a new shim so that the valve clearance comes within specified value.

T ..... Thickness of removed shim
A ..... Measured valve clearance
N ..... Thickness of new shim
Intake:
N=T + (A – 0.20 mm (0.008 in.))
Exhaust:
N=T + (A – 0.30 mm (0.012 in.))

- Select a new shim with a thickness as close as possible to the calculated value.

HINT:
Shims are available in 17 sized in increments of 0.05 mm (0.0020 in.), from 2.50 mm (0.0984 in.) to 3.30 mm (0.1299 in.).

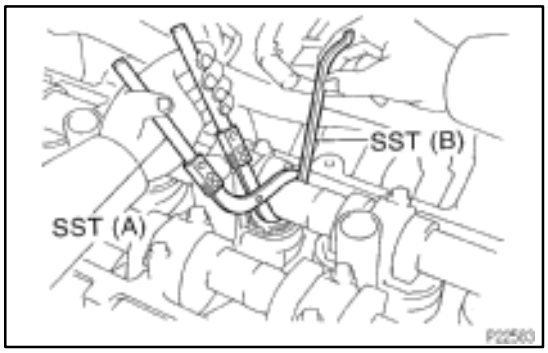

(c) Install a new adjusting shim.
- Place a new adjusting shim on the valve lifter.
- Using SST (A), press down the valve lifter and remove SST (B).

SST 09248–06020, 09248–55050 (09248–05510)

(d) Recheck the valve clearance.

9. ADJUST VALVE CLEARANCE (REAR VALVES OF NO.6 CYLINDER)

(a) Remove the distributor (See page IG–7).
(b) Remove the camshafts (See page EM–25).
(c) Remove the adjusting shim.
(d) Determine the replacement adjusting shim size (See step 8 (b) above).
(e) Place a new adjusting shim on the valve lifters.
(f) Install the camshafts (See page EM–50).
(g) Recheck the valve clearance.
(h) Install the distributor (See page IG–8).

10. REINSTALL CYLINDER HEAD COVER

11. RECONNECT HIGH–TENSION CORDS TO SPARK PLUGS (See page IG–1)

12. RECONNECT HEATER VALVE AND ENGINE WIRE TO COWL PANEL

13. REINSTALL THROTTLE BODY (See page SF–44)

14. REFILL RADIATOR WITH ENGINE COOLANT

15. CHECK AND ADJUST IGNITION TIMING (See page EM–9)

Adjusting Shim Selection Chart (Intake)

Measured clearance mm (in.) \ Installed shim thickness mm (in.)	2.500 (0.0984)	2.550 (0.1004)	2.600 (0.1024)	2.650 (0.1043)	2.700 (0.1063)	2.750 (0.1083)	2.800 (0.1102)	2.850 (0.1122)	2.900 (0.1142)	2.950 (0.1161)	3.000 (0.1181)	3.050 (0.1201)	3.100 (0.1220)	3.150 (0.1240)	3.200 (0.1260)	3.250 (0.1280)	3.300 (0.1299)
0.000 – 0.030 (0.0000 – 0.0012)	1	1	1	1	2	2	2	2	2	3	3	3	3	3	4	4	4
0.031 – 0.050 (0.0012 – 0.0020)	1	1	1	1	2	2	2	2	3	3	3	3	3	4	4	4	4
0.051 – 0.070 (0.0020 – 0.0028)	1	1	1	1	2	2	2	3	3	3	3	4	4	4	4	4	5
0.071 – 0.090 (0.0028 – 0.0035)	1	1	1	2	2	2	3	3	3	3	3	4	4	4	4	5	5
0.091 – 0.110 (0.0036 – 0.0043)	1	1	1	2	2	2	3	3	3	3	4	4	4	4	5	5	5
0.111 – 0.130 (0.0044 – 0.0051)	1	1	1	1	2	2	2	3	3	3	4	4	4	5	5	5	5
0.131 – 0.149 (0.0052 – 0.0059)	1	1	1	1	2	2	3	3	3	4	4	4	5	5	5	6	6
0.150 – 0.250 (0.0059 – 0.0098)																	
0.251 – 0.270 (0.0099 – 0.0106)	2	3	3	3	3	4	4	5	5	5	5	6	6	6	7	7	7
0.271 – 0.290 (0.0107 – 0.0114)	3	3	3	4	4	4	5	5	5	6	6	6	7	7	7	7	7
0.291 – 0.310 (0.0115 – 0.0122)	3	3	4	4	4	5	5	5	6	6	6	7	7	7	7	8	8
0.311 – 0.330 (0.0122 – 0.0130)	3	4	4	4	5	5	5	6	6	6	7	7	7	8	8	8	8
0.331 – 0.350 (0.0130 – 0.0138)	4	4	5	5	5	5	6	6	7	7	7	7	8	8	8	8	9
0.351 – 0.370 (0.0138 – 0.0146)	4	5	5	5	5	6	6	7	7	7	7	8	8	8	8	9	9
0.371 – 0.390 (0.0146 – 0.0154)	5	5	5	6	6	6	7	7	7	8	8	8	9	9	9	9	9
0.391 – 0.410 (0.0154 – 0.0161)	5	5	6	6	6	7	7	7	8	8	8	9	9	9	9	10	10
0.411 – 0.430 (0.0162 – 0.0169)	5	6	6	6	7	7	7	8	8	8	9	9	9	10	10	10	10
0.431 – 0.450 (0.0170 – 0.0177)	6	6	7	7	7	7	8	8	9	9	9	9	10	10	10	10	11
0.451 – 0.470 (0.0178 – 0.0185)	6	7	7	7	7	8	8	9	9	9	9	10	10	10	11	11	11
0.471 – 0.490 (0.0185 – 0.0193)	7	7	7	8	8	8	9	9	9	10	10	10	11	11	11	11	11
0.491 – 0.510 (0.0193 – 0.0201)	7	7	8	8	8	9	9	9	10	10	10	11	11	11	11	12	12
0.511 – 0.530 (0.0201 – 0.0209)	8	8	8	8	9	9	9	10	10	10	11	11	11	12	12	12	12
0.531 – 0.550 (0.0209 – 0.0217)	8	8	9	9	9	9	10	10	11	11	11	11	12	12	12	12	13
0.551 – 0.570 (0.0217 – 0.0224)	8	9	9	9	9	10	10	11	11	11	11	12	12	12	13	13	13
0.571 – 0.590 (0.0225 – 0.0232)	9	9	9	10	10	10	11	11	11	12	12	12	13	13	13	13	13
0.591 – 0.610 (0.0233 – 0.0240)	9	9	10	10	10	11	11	11	12	12	12	13	13	13	13	14	14
0.611 – 0.630 (0.0241 – 0.0248)	10	10	10	10	11	11	11	12	12	12	13	13	13	14	14	14	14
0.631 – 0.650 (0.0248 – 0.0256)	10	10	11	11	11	11	12	12	13	13	13	13	14	14	14	14	15
0.651 – 0.670 (0.0256 – 0.0264)	10	11	11	11	11	12	12	13	13	13	13	14	14	14	15	15	15
0.671 – 0.690 (0.0264 – 0.0272)	11	11	11	11	12	12	13	13	13	14	14	14	15	15	15	15	15
0.691 – 0.710 (0.0272 – 0.0280)	11	11	12	12	12	13	13	13	14	14	14	15	15	15	15	16	16
0.711 – 0.730 (0.0280 – 0.0287)	12	12	12	12	13	13	13	14	14	14	15	15	15	16	16	16	16
0.731 – 0.750 (0.0288 – 0.0295)	12	12	13	13	13	13	14	14	15	15	15	15	16	16	16	16	17
0.751 – 0.770 (0.0296 – 0.0303)	12	13	13	13	13	14	14	15	15	15	15	16	16	16	16	17	17
0.771 – 0.790 (0.0304 – 0.0311)	13	13	13	13	14	14	15	15	15	16	16	16	17	17	17	17	17
0.791 – 0.810 (0.0311 – 0.0319)	13	13	14	14	14	15	15	15	16	16	16	17	17	17	17	17	17
0.811 – 0.830 (0.0319 – 0.0327)	14	14	14	14	15	15	15	16	16	16	17	17	17	17	17		
0.831 – 0.850 (0.0327 – 0.0335)	14	14	15	15	15	15	16	16	17	17	17	17	17				
0.851 – 0.870 (0.0335 – 0.0343)	14	15	15	15	15	16	16	17	17	17	17	17					
0.871 – 0.890 (0.0343 – 0.0350)	15	15	15	15	16	16	17	17	17	17	17						
0.891 – 0.910 (0.0351 – 0.0358)	15	15	16	16	16	17	17	17	17								
0.911 – 0.930 (0.0359 – 0.0366)	16	16	16	16	17	17	17	17									
0.931 – 0.950 (0.0367 – 0.0374)	16	16	17	17	17	17	17										
0.951 – 0.970 (0.0374 – 0.0382)	16	17	17	17	17	17											
0.971 – 0.990 (0.0382 – 0.0390)	17	17	17	17													
0.991 – 1.010 (0.0390 – 0.0398)	17	17	17														
1.011 – 1.030 (0.0398 – 0.0406)	17	17															
1.031 – 1.050 (0.0406 – 0.0413)	17																

V00831

Intake valve clearance (Cold):
0.15 – 0.25 mm (0.006 – 0.010 in.)

EXAMPLE:

The 2.800 mm (0.1102 in.) shim is installed, and the measured clearance is 0.440 mm (0.0173 in.). Replace the 2.800 mm (0.1102 in.) shim with a No. 12 shim.

New shim thickness — mm (in.)

Shim No.	Thickness	Shim No.	Thickness
1	2.500 (0.0984)	10	2.950 (0.1161)
2	2.550 (0.1004)	11	3.000 (0.1181)
3	2.600 (0.1024)	12	3.050 (0.1201)
4	2.650 (0.1043)	13	3.100 (0.1220)
5	2.700 (0.1063)	14	3.150 (0.1240)
6	2.750 (0.1083)	15	3.200 (0.1260)
7	2.800 (0.1102)	16	3.250 (0.1280)
8	2.850 (0.1122)	17	3.300 (0.1299)
9	2.900 (0.1142)		

HINT: New shims have the thickness in millimeters imprinted on the face.

Adjusting Shim Selection Chart (Exhaust)

Measured clearance mm (in.) \ Installed shim thickness mm (in.)	2.500 (0.0984)	2.520 (0.0992)	2.540 (0.1000)	2.560 (0.1004)	2.580 (0.1008)	2.600 (0.1016)	2.620 (0.1024)	2.640 (0.1031)	2.660 (0.1039)	2.680 (0.1047)	2.700 (0.1055)	2.720 (0.1063)	2.740 (0.1071)	2.760 (0.1079)	2.780 (0.1083)	2.800 (0.1102)	2.820 (0.1110)	2.840 (0.1118)	2.860 (0.1122)	2.880 (0.1130)	2.900 (0.1142)	2.920 (0.1150)	2.940 (0.1157)	2.960 (0.1161)	2.980 (0.1169)	3.000 (0.1181)	3.020 (0.1189)	3.040 (0.1197)	3.060 (0.1205)	3.080 (0.1213)	3.100 (0.1220)	3.120 (0.1228)	3.140 (0.1236)	3.160 (0.1244)	3.180 (0.1252)	3.200 (0.1260)	3.220 (0.1268)	3.240 (0.1276)	3.260 (0.1283)	3.280 (0.1291)	3.300 (0.1299)
0.000 – 0.030 (0.0000 – 0.0012)															1	1	1	1	1	1	2	2	2	2	2	3	3	3	3	4	4	4	4	4	5	5	5	5	5	6	6	6	6	7	7	7	7	8	8	8	8	9	9	9	10	10	10	10	11	11
0.031 – 0.050 (0.0012 – 0.0020)													1	1	1	1	1	1	2	2	2	2	2	3	3	3	3	4	4	4	4	4	5	5	5	5	5	6	6	6	6	6	7	7	7	7	8	8	8	9	9	9	9	10	10	11	11	11	11	12
0.051 – 0.070 (0.0020 – 0.0028)											1	1	1	1	1	1	2	2	2	2	3	3	3	3	4	4	4	4	5	5	5	5	6	6	6	6	6	7	7	7	7	7	8	8	8	8	9	9	9	9	10	10	11	11	11	11	12	12
0.071 – 0.090 (0.0028 – 0.0035)										1	1	1	1	1	2	2	2	2	3	3	3	3	4	4	4	4	5	5	5	5	6	6	6	6	6	7	7	7	7	7	8	8	8	8	9	9	9	10	10	10	11	11	11	12	12	12	13
0.091 – 0.110 (0.0036 – 0.0043)										1	1	1	1	2	2	2	2	3	3	3	3	4	4	4	4	5	5	5	5	6	6	6	6	6	7	7	7	7	7	8	8	8	8	9	9	9	9	10	10	10	11	11	11	12	12	12	13	13
0.111 – 0.130 (0.0044 – 0.0051)								1	1	1	1	2	2	2	2	3	3	3	3	4	4	4	4	5	5	5	5	6	6	6	6	7	7	7	7	8	8	8	8	9	9	9	9	10	10	10	11	11	11	12	12	12	13	13	13	14	14
0.131 – 0.150 (0.0052 – 0.0059)							1	1	1	1	2	2	2	2	3	3	3	3	4	4	4	4	5	5	5	5	6	6	6	6	7	7	7	7	8	8	8	8	9	9	9	9	10	10	10	11	11	11	12	12	13	13	13	14	14	14	15	15
0.151 – 0.170 (0.0059 – 0.0067)						1	1	1	1	2	2	2	3	3	3	3	4	4	4	4	5	5	5	5	6	6	6	6	7	7	7	7	8	8	8	8	9	9	9	9	10	10	10	10	11	11	11	12	12	13	13	13	14	14	15	15	15	16
0.171 – 0.190 (0.0067 – 0.0075)					1	1	1	1	2	2	2	3	3	3	3	4	4	4	4	5	5	5	5	6	6	6	6	7	7	7	7	8	8	8	8	9	9	9	9	10	10	10	10	11	11	11	12	12	12	13	13	13	14	14	14	15	15	16
0.191 – 0.210 (0.0075 – 0.0083)				1	1	1	1	2	2	2	3	3	3	3	4	4	4	4	5	5	5	5	6	6	6	6	7	7	7	7	8	8	8	8	9	9	9	9	10	10	10	10	11	11	11	11	12	12	12	13	13	14	14	14	15	15	16	16
0.211 – 0.230 (0.0083 – 0.0091)			1	1	1	1	1	2	2	2	3	3	4	4	4	4	4	5	5	5	5	6	6	6	6	7	7	7	7	8	8	8	8	9	9	9	9	10	10	10	10	11	11	11	12	12	12	13	13	14	14	15	15	16	16	16	17	17
0.231 – 0.249 (0.0091 – 0.0098)		1	1	1	1	1	2	2	3	3	3	4	4	4	4	5	5	5	5	6	6	6	6	7	7	7	7	8	8	8	8	9	9	9	9	10	10	10	10	11	11	11	11	12	12	12	13	13	13	14	14	15	15	15	16	16	17	17
0.250 – 0.350 (0.0098 – 0.0138)																																																									
0.351 – 0.370 (0.0138 – 0.0146)	3	3	3	3	3	4	4	5	5	5	5	6	6	6	7	7	7	7	7	8	8	8	8	8	9	9	9	9	9	10	10	10	10	10	11	11	11	11	11	12	12	12	12	12	13	13	13	13	13	14	14	14	14	14	15	15	15	16	16	17	17	17	17	17
0.371 – 0.390 (0.0146 – 0.0154)	3	3	3	4	4	4	5	5	5	6	6	6	7	7	7	7	7	8	8	8	8	8	9	9	9	9	9	10	10	10	10	10	11	11	11	11	11	12	12	12	12	12	13	13	13	13	13	14	14	14	14	15	15	15	16	16	16	17	17	17	17	17
0.391 – 0.410 (0.0154 – 0.0161)	3	3	4	4	4	5	5	5	6	6	6	7	7	7	7	8	8	8	8	9	9	9	9	9	10	10	10	10	10	11	11	11	11	11	12	12	12	12	12	13	13	13	13	13	14	14	14	14	14	15	15	15	15	16	16	16	17	17	17	17	17
0.411 – 0.430 (0.0162 – 0.0169)	3	4	4	4	5	5	5	6	6	6	7	7	7	8	8	8	8	8	9	9	9	9	9	10	10	10	10	11	11	11	11	11	12	12	12	12	12	13	13	13	13	13	14	14	14	14	15	15	15	15	16	16	16	17	17	17	17	17	17		
0.431 – 0.450 (0.0170 – 0.0177)	4	4	5	5	5	5	6	6	7	7	7	8	8	8	8	9	9	9	9	10	10	10	10	11	11	11	11	11	12	12	12	12	13	13	13	13	13	14	14	14	14	14	15	15	15	15	16	16	16	16	17	17	17	17	17	17					
0.451 – 0.470 (0.0178 – 0.0185)	4	5	5	5	5	6	6	7	7	7	7	8	8	8	9	9	9	9	9	10	10	10	10	11	11	11	11	11	12	12	12	12	12	13	13	13	13	14	14	14	14	15	15	15	15	15	16	16	16	16	17	17	17	17	17						
0.471 – 0.490 (0.0185 – 0.0193)	5	5	5	6	6	6	7	7	7	8	8	8	9	9	9	9	9	10	10	10	10	10	11	11	11	11	11	12	12	12	12	12	13	13	13	13	13	14	14	14	14	15	15	15	15	15	16	16	16	16	17	17	17	17	17						
0.491 – 0.510 (0.0193 – 0.0201)	5	5	6	6	6	7	7	7	8	8	8	9	9	9	9	10	10	10	10	10	11	11	11	11	11	12	12	12	12	13	13	13	13	13	14	14	14	14	14	15	15	15	15	15	16	16	16	16	16	17	17	17	17	17							
0.511 – 0.530 (0.0201 – 0.0209)	5	6	6	6	7	7	7	8	8	8	9	9	9	9	10	10	10	10	10	11	11	11	11	11	12	12	12	12	13	13	13	13	13	14	14	14	14	15	15	15	15	15	16	16	16	16	17	17	17	17	17	17									
0.531 – 0.550 (0.0209 – 0.0217)	6	6	7	7	7	7	8	8	9	9	9	9	10	10	10	10	11	11	11	11	11	12	12	12	12	12	13	13	13	13	13	14	14	14	14	14	15	15	15	15	15	16	16	16	16	16	17	17	17	17	17	17	17								
0.551 – 0.570 (0.0217 – 0.0224)	6	7	7	7	7	8	8	9	9	9	9	10	10	10	11	11	11	11	12	12	12	12	12	13	13	13	13	13	14	14	14	14	14	15	15	15	15	16	16	16	16	16	17	17	17	17	17	17	17	17	17									
0.571 – 0.590 (0.0225 – 0.0232)	7	7	7	8	8	8	9	9	9	10	10	10	11	11	11	11	11	12	12	12	12	12	13	13	13	13	13	14	14	14	14	14	15	15	15	15	15	16	16	16	16	16	17	17	17	17	17	17	17	17										
0.591 – 0.610 (0.0233 – 0.0240)	7	7	8	8	8	9	9	9	10	10	10	11	11	11	11	12	12	12	12	12	13	13	13	13	13	14	14	14	14	14	15	15	15	15	15	16	16	16	16	16	17	17	17	17	17	17	17	17												
0.611 – 0.630 (0.0241 – 0.0248)	7	8	8	8	9	9	9	10	10	10	11	11	11	12	12	12	12	12	13	13	13	13	13	14	14	14	14	15	15	15	15	15	16	16	16	16	16	17	17	17	17	17	17	17	17	17	17												
0.631 – 0.650 (0.0248 – 0.0256)	8	8	9	9	9	9	10	10	11	11	11	11	12	12	12	12	13	13	13	13	13	14	14	14	14	15	15	15	15	15	16	16	16	16	16	17	17	17	17	17	17	17	17	17															
0.651 – 0.670 (0.0256 – 0.0264)	8	9	9	9	9	10	10	11	11	11	11	12	12	12	13	13	13	13	13	14	14	14	14	15	15	15	15	15	16	16	16	16	16	17	17	17	17	17	17	17																			
0.671 – 0.690 (0.0264 – 0.0272)	9	9	9	10	10	10	11	11	11	12	12	12	13	13	13	13	13	14	14	14	14	14	15	15	15	15	15	16	16	16	16	16	17	17	17	17	17	17	17																			
0.691 – 0.710 (0.0272 – 0.0280)	9	9	10	10	10	11	11	11	12	12	12	13	13	13	13	14	14	14	14	14	15	15	15	15	15	16	16	16	16	16	17	17	17	17	17	17	17																					
0.711 – 0.730 (0.0280 – 0.0287)	9	10	10	10	11	11	11	12	12	12	13	13	13	14	14	14	14	14	15	15	15	15	15	16	16	16	16	16	17	17	17	17	17	17	17																							
0.731 – 0.750 (0.0288 – 0.0295)	10	10	11	11	11	11	12	12	13	13	13	13	14	14	14	14	15	15	15	15	15	16	16	16	16	16	17	17	17	17	17	17	17																							
0.751 – 0.770 (0.0296 – 0.0303)	10	11	11	11	11	12	12	13	13	13	13	14	14	14	15	15	15	15	15	16	16	16	16	16	17	17	17	17	17	17																											
0.771 – 0.790 (0.0304 – 0.0311)	11	11	11	12	12	12	13	13	13	14	14	14	14	15	15	15	15	16	16	16	16	16	17	17	17	17	17	17	17																											
0.791 – 0.810 (0.0311 – 0.0319)	11	11	12	12	12	13	13	13	14	14	14	15	15	15	15	16	16	16	16	16	17	17	17	17	17	17	17	17																											
0.811 – 0.830 (0.0319 – 0.0327)	11	12	12	12	13	13	13	14	14	14	15	15	15	16	16	16	16	16	17	17	17	17	17	17	17	17																											
0.831 – 0.850 (0.0327 – 0.0335)	12	12	13	13	13	13	14	14	15	15	15	15	16	16	16	16	17	17	17	17	17	17	17																														
0.851 – 0.870 (0.0335 – 0.0343)	12	13	13	13	13	14	14	15	15	15	15	16	16	16	17	17	17	17	17	17	17																																
0.871 – 0.890 (0.0343 – 0.0350)	13	13	13	14	14	14	15	15	15	16	16	16	16	17	17	17	17	17	17																																			
0.891 – 0.910 (0.0351 – 0.0358)	13	13	14	14	14	15	15	15	16	16	16	17	17	17	17	17	17																																						
0.911 – 0.930 (0.0359 – 0.0366)	13	14	14	14	15	15	15	16	16	16	17	17	17	17	17																																								
0.931 – 0.950 (0.0367 – 0.0374)	14	14	15	15	15	15	16	16	17	17	17	17	17																																									
0.951 – 0.970 (0.0374 – 0.0382)	14	15	15	15	15	16	16	17	17	17	17	17																																										
0.971 – 0.990 (0.0382 – 0.0390)	15	15	15	16	16	16	17	17	17	17	17																																											
0.991 – 1.010 (0.0390 – 0.0398)	15	15	16	16	16	17	17	17	17																																													
1.011 – 1.030 (0.0398 – 0.0406)	15	16	16	16	17	17	17	17																																														
1.031 – 1.050 (0.0406 – 0.0413)	16	16	17	17	17	17	17																																															
1.051 – 1.070 (0.0414 – 0.0421)	16	17	17	17	17	17																																																
1.071 – 1.090 (0.0422 – 0.0429)	17	17	17	17	17																																																	
1.091 – 1.110 (0.0430 – 0.0437)	17	17	17																																																				
1.111 – 1.130 (0.0437 – 0.0445)	17	17																																																					
1.131 – 1.150 (0.0445 – 0.0413)	17																																																						

V00832

Exhaust valve clearance (Cold):
0.25 – 0.35 mm (0.010 – 0.014 in.)

EXAMPLE:

The 2.800 mm (0.1102 in.) shim is installed, and the measured clearance is 0.440 mm (0.0173 in.). Replace the 2.800 mm (0.1102 in.) shim with a No. 10 shim.

New shim thickness — mm (in.)

Shim No.	Thickness	Shim No.	Thickness
1	2.500 (0.0984)	10	2.950 (0.1161)
2	2.550 (0.1004)	11	3.000 (0.1181)
3	2.600 (0.1024)	12	3.050 (0.1201)
4	2.650 (0.1043)	13	3.100 (0.1220)
5	2.700 (0.1063)	14	3.150 (0.1240)
6	2.750 (0.1083)	15	3.200 (0.1260)
7	2.800 (0.1102)	16	3.250 (0.1280)
8	2.850 (0.1122)	17	3.300 (0.1299)
9	2.900 (0.1142)		

HINT: New shims have the thickness in millimeters imprinted on the face.

IGNITION TIMING

EM1G0–02

INSPECTION

1. WARM UP ENGINE

Allow the engine to warm up to normal operating temperature.

2. CONNECT LEXUS HAND–HELD TESTER OR OBD II SCAN TOOL

(a) Remove the fuse cover on the instrument panel.

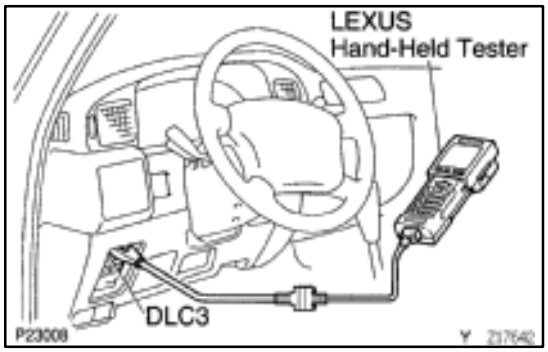

(b) Connect the LEXUS hand–held tester or OBD II scan tool to the DLC3.

(c) Please refer to the LEXUS hand–held tester or OBD II scan tool operator's manual for further details.

3. CONNECT TIMING LIGHT TO ENGINE

4. CHECK IDLE SPEED

(a) Race the engine speed at 2,500 rpm for approx. 90 seconds.

(b) Check the idle speed.
Idle speed: 650 ± 50 rpm

5. INSPECT AND ADJUST IGNITION TIMING

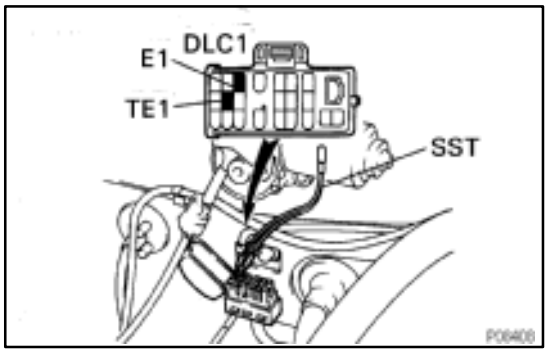

(a) Using SST, connect terminals TE1 and E1 of the DLC1.
SST 09843–18020

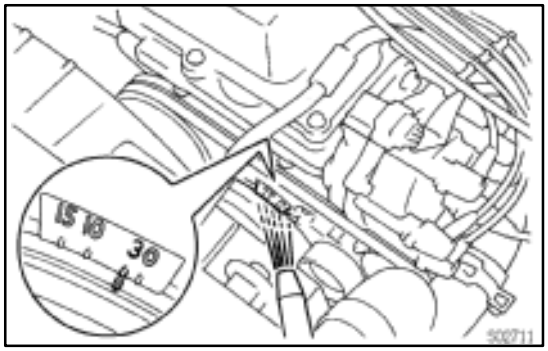

(b) Using a timing light, check the ignition timing.
Ignition timing: 3° BTDC @ idle
(Transmission in neutral position and A/C OFF)

(c) Loosen the hold–down bolt, and adjust by turning the distributor.

(d) Tighten the hold–down bolt, and recheck the ignition timing.
Torque: 18 N·m (180 kgf·cm, 13 ft·lbf)

(e) Remove the SST from the DLC1.
SST 09843–18020

6. FURTHER CHECK IGNITION TIMING
Ignition timing: 2 – 13° BTDC @ idle
(Transmission in neutral position and A/C OFF)

HINT:
The timing mark moves in a range between 2° and 13°.

7. DISCONNECT TIMING LIGHT FROM ENGINE

8. DISCONNECT LEXUS HAND–HELD TESTER OR OBD II SCAN TOOL

IDLE SPEED

EM0KU–07

INSPECTION

1. INITIAL CONDITIONS

(a) Engine at normal operating temperature
(b) Air cleaner installed
(c) All pipes and hoses of air induction system connected
(d) All accessories switched OFF
(e) All vacuum lines properly connected

HINT:
All vacuum hoses for EGR system, etc. should be properly connected

(f) SFI system wiring connectors fully plugged
(g) Ignition timing set correctly
(h) Transmission in neutral position
(i) Air conditioning switched OFF

2. CONNECT LEXUS HAND–HELD TESTER OR OBD II SCAN TOOL (See page EM–9)

3. INSPECT IDLE SPEED

(a) Race the engine speed at 2,500 rpm for approx. 90 seconds.
(b) Check the idle speed.
Idle speed: 650 ± 50 rpm

If the idle speed is not as specified, check the IAC valve.

4. DISCONNECT LEXUS HAND–HELD TESTER OR OBD II SCAN TOOL

TIMING CHAIN

COMPONENTS

EM1E8–02

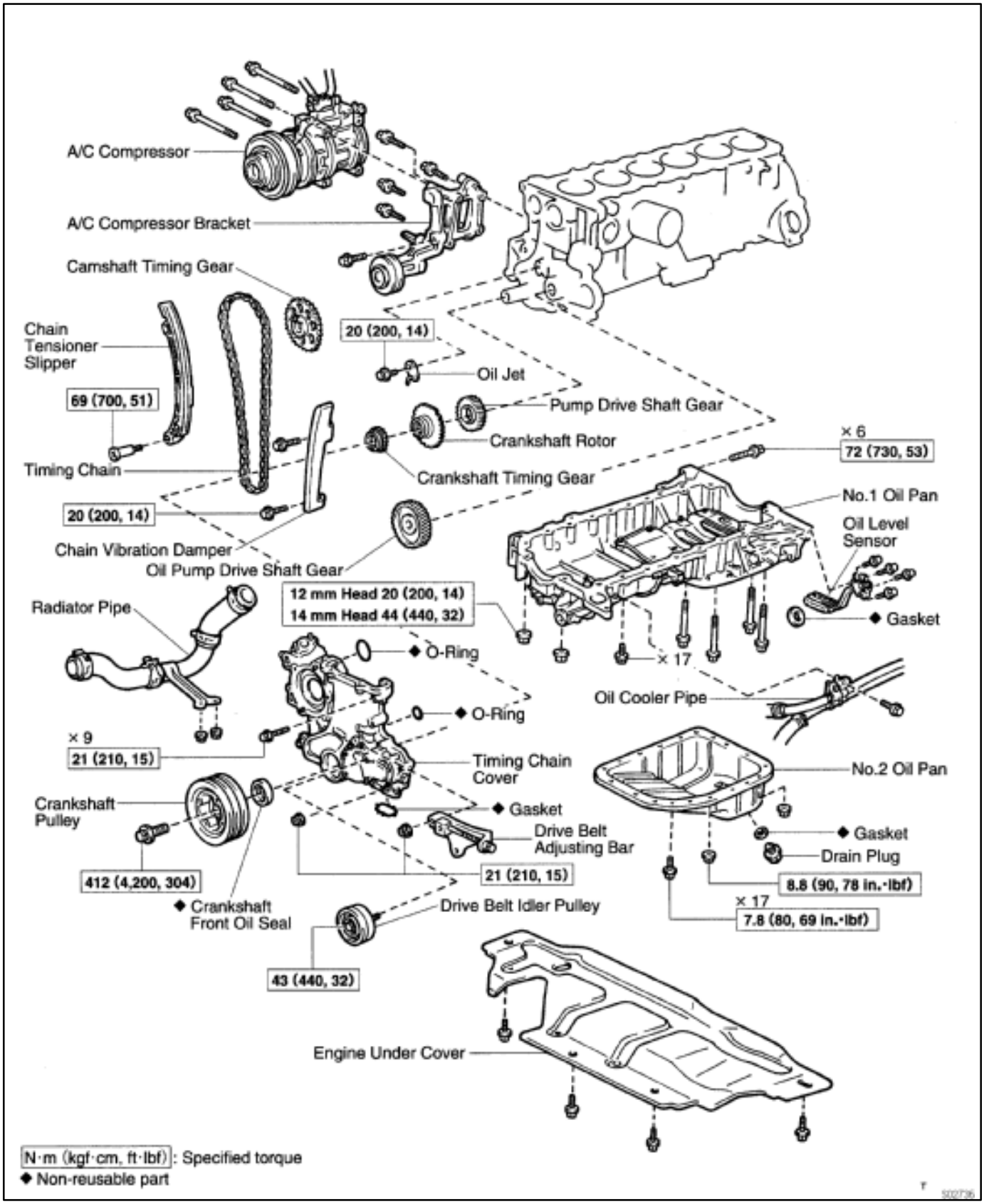

EM1G1–01

REMOVAL

1. **DRAIN ENGINE OIL**
2. **DRAIN ENGINE COOLANT**
3. **REMOVE ENGINE UNDER COVER**
4. **REMOVE RADIATOR (See page CO–14)**
5. **DISCONNECT A/C COMPRESSOR AND BRACKET (See page EM–77)**
6. **REMOVE RADIATOR PIPE (See page EM–77)**
7. **REMOVE WATER PUMP (See page CO–4)**
8. **REMOVE CYLINDER HEAD ASSEMBLY (See page EM–25)**
9. **REMOVE NO.2 AND NO.1 OIL PANS (See page LU–6)**

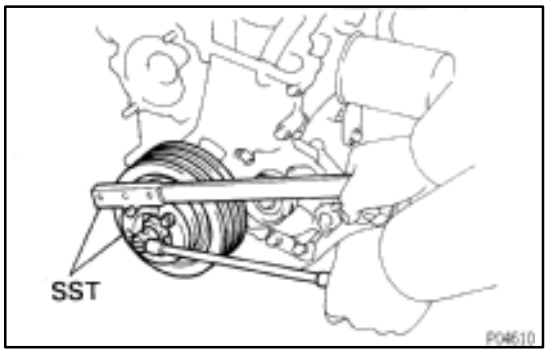

10. REMOVE CRANKSHAFT PULLEY

(a) Using SST, remove the pulley bolt.
SST 09213–58012 (90201–08131, 91111–50845), 09330–00021

(b) Remove the crankshaft pulley.

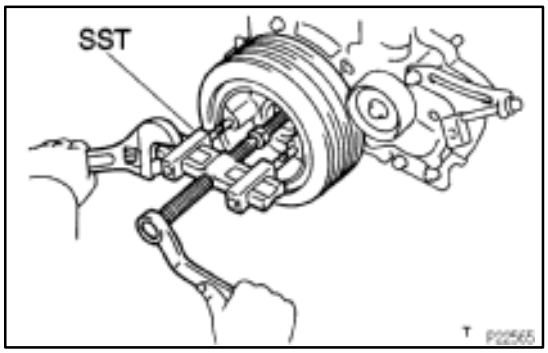

HINT:
If necessary, remove the pulley with SST.
SST 09950–50010 (09951–05010, 09952–05010, 09953–05010, 09953–05020, 09954–05020)

11. CHECK THRUST CLEARANCE OF OIL PUMP DRIVE SHAFT GEAR

Using a dial indicator with lever type attachment, measure the thrust clearance.

Standard thrust clearance:
0.040 – 0.160 mm (0.0016 – 0.0063 in.)
Maximum thrust clearance:
0.30 mm (0.0118 in.)

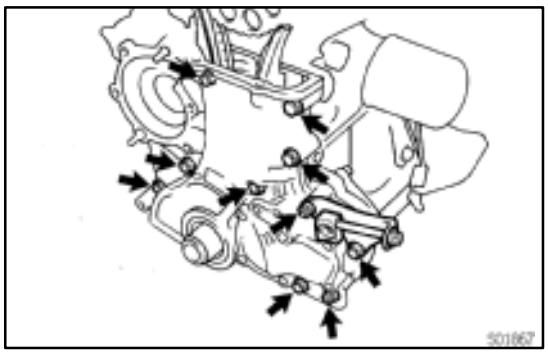

If the thrust clearance is greater than maximum, replace the oil pump drive shaft gear and/or timing chain cover.

12. REMOVE DRIVE BELT IDLER PULLEY

Remove the bolt and idler pulley.

13. REMOVE TIMING CHAIN COVER

(a) Remove the 9 bolts, 2 nuts and drive belt adjusting bar.

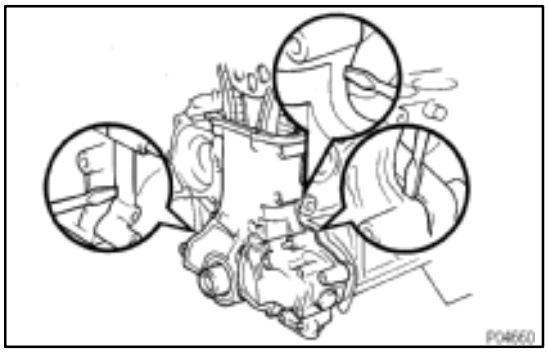

(b) Remove the oil pump by prying the portions between the cylinder block and oil pump with a screwdriver.

NOTICE:

Be careful not to damage the contact surfaces of the cylinder block and oil pump.

(c) Remove the 2 O–rings from the oil pump.

(d) Remove the gasket from the oil pump.

14. REMOVE TIMING CHAIN AND CAMSHAFT TIMING GEAR

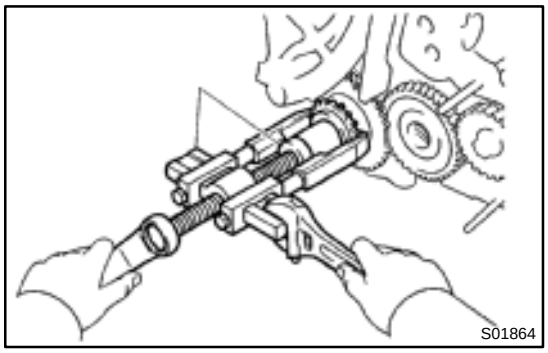

15. REMOVE CRANKSHAFT TIMING GEAR

HINT:

If necessary, remove the gear with SST.

SST 09950–40010 (09951–04010, 09952–04010, 09953–04020, 09954–04010, 09955–04060), 09950–60010 (09951–00350)

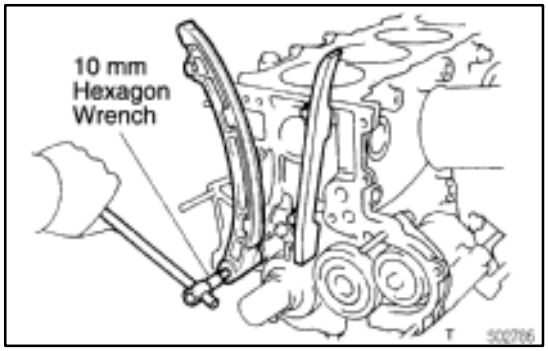

16. REMOVE CHAIN TENSIONER SLIPPER

Using a 10 mm hexagon wrench, remove the bolt and slipper.

17. REMOVE CHAIN VIBRATION DAMPER

Remove the 2 bolts and damper.

18. REMOVE OIL JET

Remove the bolt and oil jet.

19. REMOVE CRANKSHAFT ROTOR

20. REMOVE OIL PUMP DRIVE SHAFT GEAR

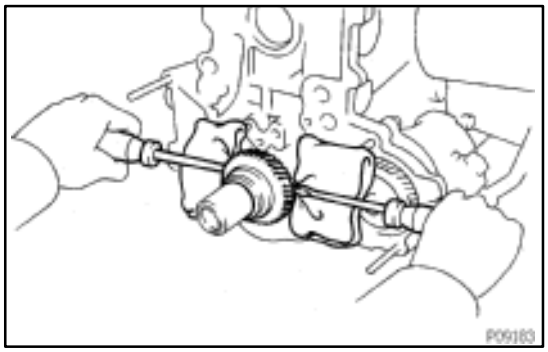

21. REMOVE PUMP DRIVE SHAFT GEAR

If the pump drive shaft gear cannot be removed by hand, use 2 screwdrivers.

NOTICE:

Position shop rags as shown to prevent damage.

EM1EA–02

INSPECTION

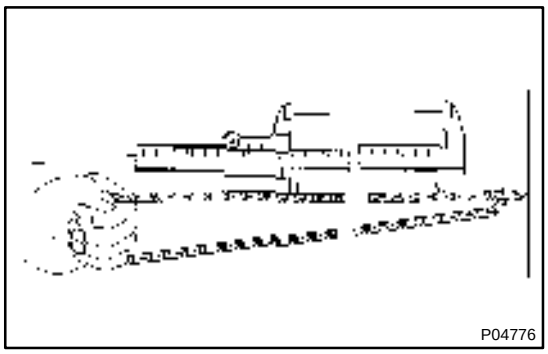

1. INSPECT TIMING CHAIN AND TIMING GEARS

(a) Measure the length of 16 links with the chain fully stretched.

Maximum chain elongation: 146.6 mm (5.772 in.)

If the elongation is greater than maximum, replace the chain.

HINT:

Make the same measurements pulling at 3 or more places selected at random.

(b) Wrap the chain around the timing gear.

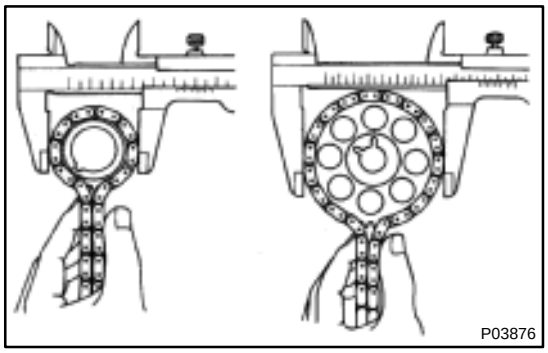

(c) Using vernier calipers, measure the timing gear diameter with the chain.

NOTICE:

Vernier calipers must contact the chain rollers for measuring.

Minimum gear diameter (w/ Chain):

Camshaft

126.0 mm (4.961 in.)

Crankshaft

65.4 mm (2.575 in.)

If the diameter is less than minimum, replace the chain and gears.

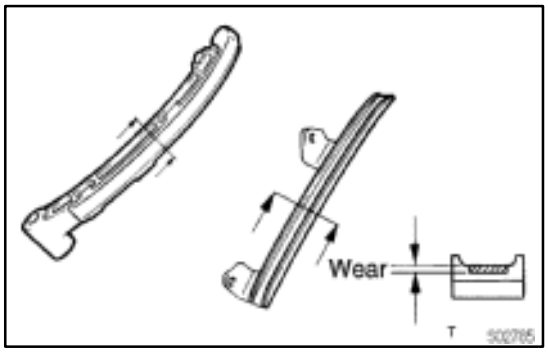

2. INSPECT CHAIN TENSIONER SLIPPER AND VIBRATION DAMPER

Measure the chain tensioner slipper and vibration damper wears.

Maximum wear: 1.0 mm (0.039 in.)

If the wear is greater than maximum, replace the slipper and/or damper.

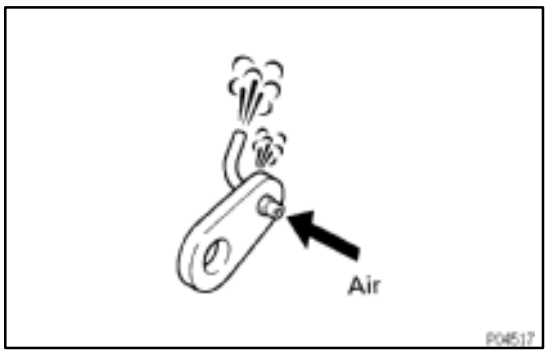

3. INSPECT OIL JET

Check the oil jet for damage or clogging.
If necessary, replace the oil jet.

EM1G2–02

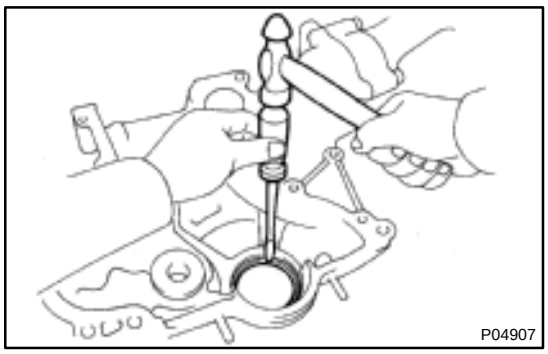

REPLACEMENT

HINT:

There are 2 methods (1 and 2) to replace the oil seal which are as follows:

1. REPLACE CRANKSHAFT FRONT OIL SEAL (IF TIMING CHAIN COVER IS REMOVED FROM CYLINDER BLOCK)

If timing chain cover is removed from cylinder block

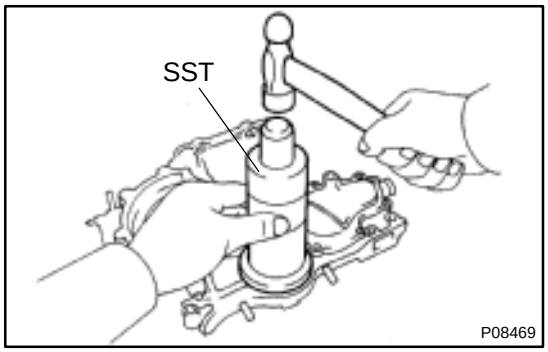

(a) Using a screwdriver and a hammer, tap out the oil seal.

(b) Using SST and a hammer, tap in a new oil seal until its surface is flush with the timing chain cover edge.
SST 09316–60010 (09316–00010, 09316–00050)

(c) Apply MP grease to the oil seal lip.

NOTICE:

Do not let foreign matter get onto the lip of the oil seal.

If timing chain cover is installed to cylinder block:

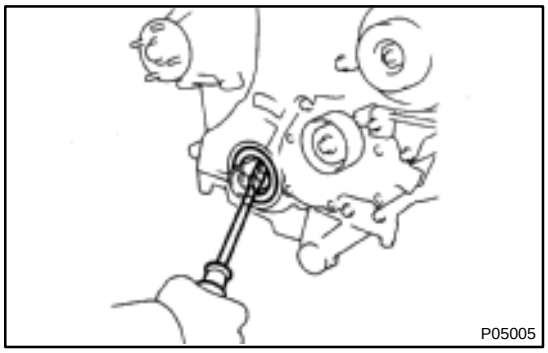

2. REPLACE CRANKSHAFT FRONT OIL SEAL (IF TIMING CHAIN COVER IS INSTALLED TO CYLINDER BLOCK)

(a) Using a screwdriver, pry out the oil seal.

NOTICE:

Be careful not to damage the crankshaft. Tape the screwdriver tip.

(b) Apply MP grease to a new oil seal lip.

NOTICE:

Do not let foreign matter get onto the lip of the oil seal.

(c) Using SST and a hammer, tap in the oil seal until its surface is flush with the timing chain cover edge.
SST 09316–60011 (09316–00011, 09316–00051)

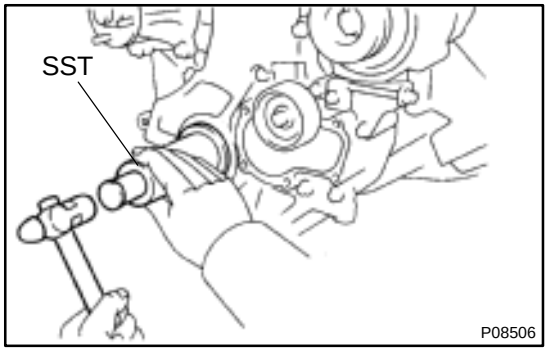

EM1G3–01

INSTALLATION

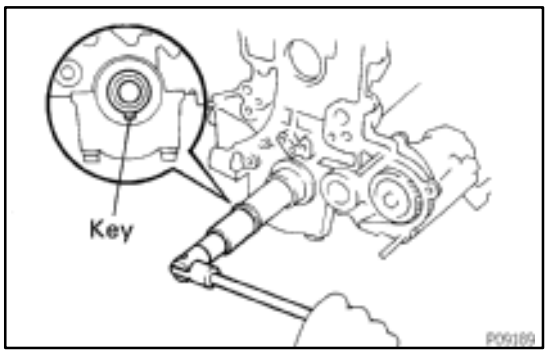

1. SET CRANKSHAFT

Turn the crankshaft until the set key on crankshaft facing downward.

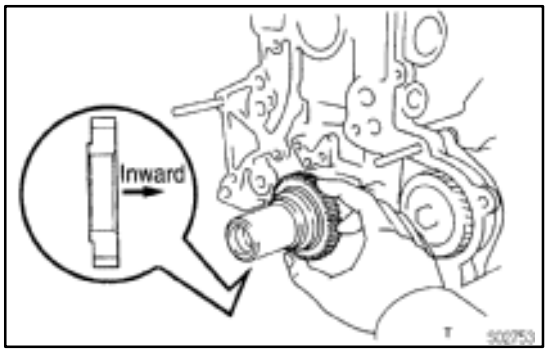

2. INSTALL PUMP DRIVE SHAFT GEAR

NOTICE:

Be careful of the installation direction.

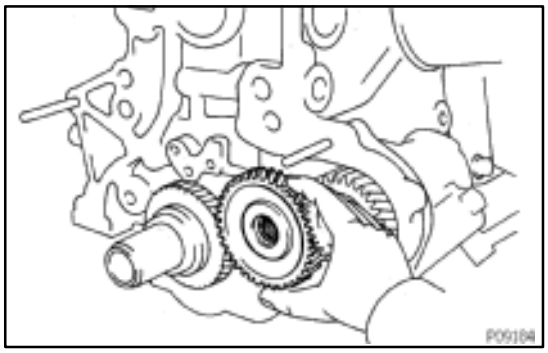

3. INSTALL OIL PUMP DRIVE SHAFT GEAR

(a) Apply a light coat of engine oil on the shaft portion of the gear.

(b) Install the gear.

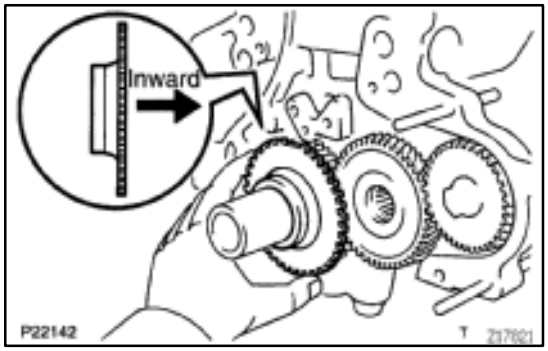

4. INSTALL CRANKSHAFT ROTOR

NOTICE:

Be careful of the installation direction.

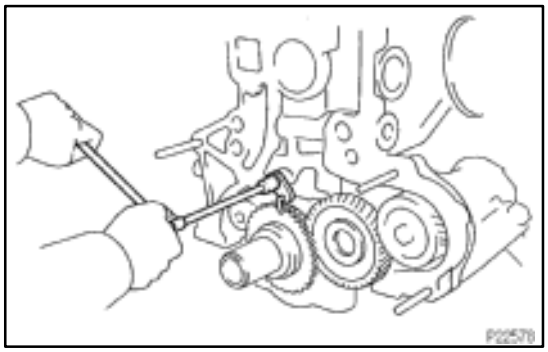

5. INSTALL OIL JET

Install the oil jet with the bolt.

Torque: 20 N·m (200 kgf·cm, 14 ft·lbf)

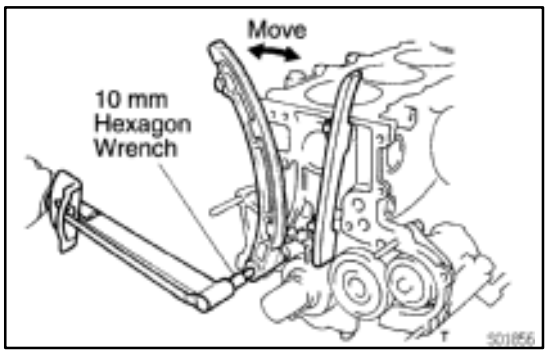

6. INSTALL CHAIN VIBRATION DAMPER

Install the damper with the 2 bolts.

Torque: 20 N·m (200 kgf·cm, 14 ft·lbf)

7. INSTALL CHAIN TENSIONER SLIPPER

(a) Using a 10 mm hexagon wrench, install the slipper with the bolt.

Torque: 69 N·m (700 kgf·cm, 51 ft·lbf)

(b) Check that the slipper moves smoothly.

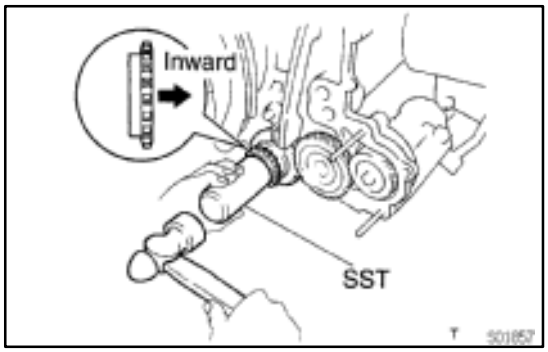

8. INSTALL CRANKSHAFT TIMING GEAR

NOTICE:

Be careful of the installation direction.

HINT:

If necessary, install the gear with SST.

SST 09636–20010

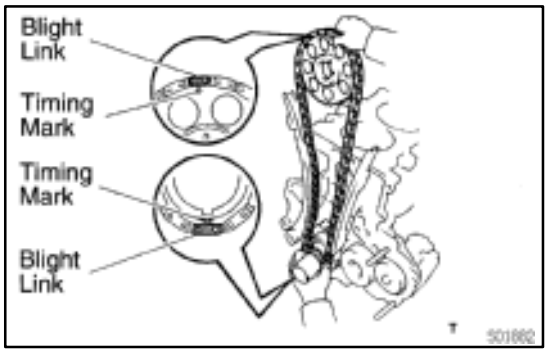

9. INSTALL TIMING CHAIN AND CAMSHAFT TIMING GEAR

(a) Install the timing chain on the camshaft timing gear with the blight link aligned with the timing mark on the camshaft timing gear.

(b) Install the timing chain on the crankshaft timing gear with the other blight link aligned with the timing mark on the crankshaft timing gear.

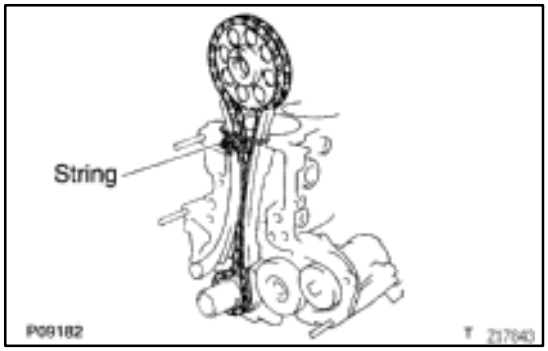

(c) Tie the timing chain with a string as shown in the illustration and make sure it doesn't come loose.

10. INSTALL TIMING CHAIN COVER

(a) Remove any old packing (FIPG) material and be careful not to drop any oil on the contact surfaces of the timing chain cover and cylinder block.

- Using a razor blade and gasket scraper, remove all the old packing (FIPG) material from the gasket surfaces and sealing grooves.
- Thoroughly clean all components to remove all the loose material.
- Using a non–residue solvent, clean both sealing surfaces.

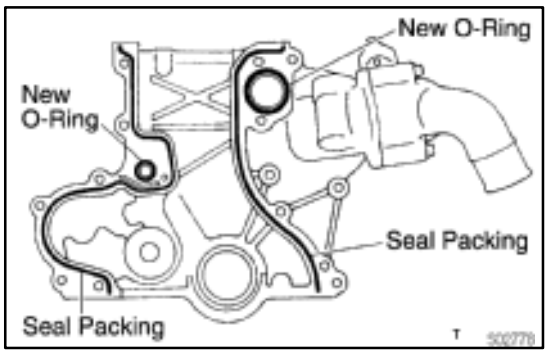

(b) Apply seal packing to the timing chain cover as shown in the illustration.

Seal packing:

Part No. 08826–00080 or equivalent

- Install a nozzle that has been cut to a 2 – 3 mm (0.08 – 0.12 in.) opening.

HINT:

Avoid applying an excessive amount to the surface.

- Parts must be assembled within 5 minutes of application. Otherwise the material must be removed and reapplied.
- Immediately remove nozzle from the tube and reinstall cap.

(c) Place 2 new O–rings on the timing chain cover.

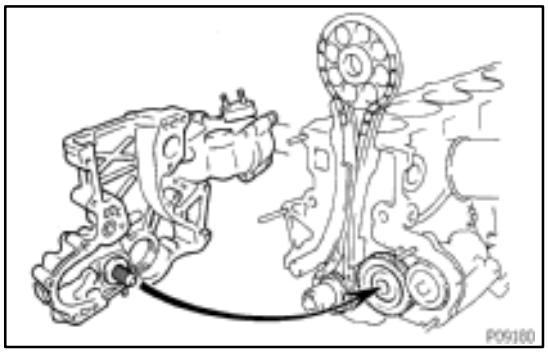

(d) Engage the gears of the oil pump drive rotor and drive gear, and install the oil pump.

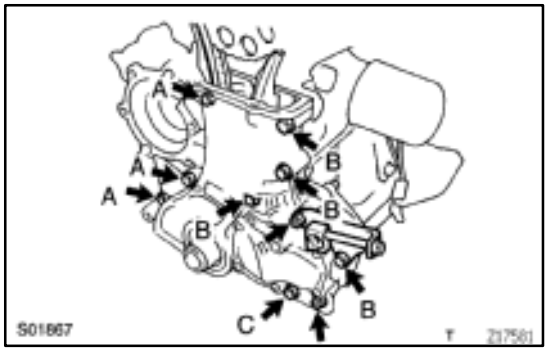

(e) Install the oil pump and drive belt adjusting bar with the 9 bolts and 2 nuts.

Torque: 21 N·m (210 kgf·cm, 15 ft·lbf)

HINT:

Each bolt length is indicated in the illustration.

Bolt length:

A	30 mm (1.18 in.)
B	50 mm (1.97 in.)
C	60 mm (2.38 in.)

(f) Remove the cord from the chain.

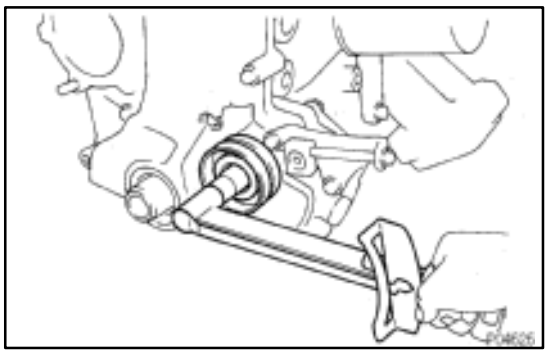

11. INSTALL DRIVE BELT IDLER PULLEY

Install the pulley with the bolt.

Torque: 43 N·m (440 kgf·cm, 32 ft·lbf)

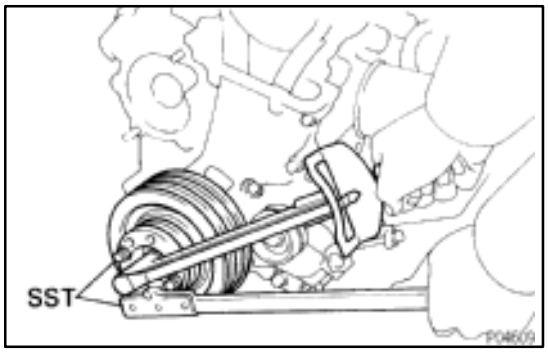

12. INSTALL CRANKSHAFT PULLEY

(a) Align the pulley set key with the key groove of the pulley, and slide on the pulley.

(b) Using SST, install the pulley bolt.

SST 09213–58012 (90201–08131, 91111–50845), 09930–00021

Torque: 412 N·m (4,200 kgf·cm, 304 ft·lbf)

13. INSTALL NO.1 AND NO.2 OIL PANS (See page LU–12)

14. INSTALL CYLINDER HEAD ASSEMBLY (See page EM–50)

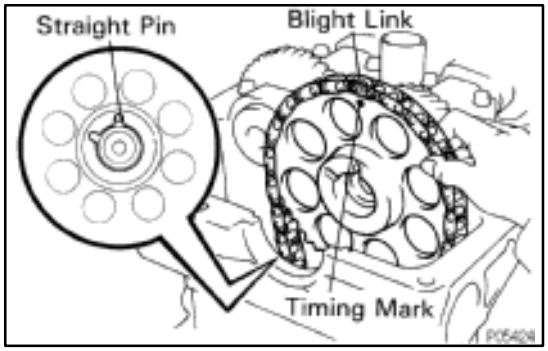

NOTICE:

However, for the installation of the camshaft timing gear and timing chain, follow the below procedure. Align the blight link of the timing chain and camshaft timing gear mark, and install them to the camshaft.

15. INSTALL WATER PUMP (See page CO–6)

16. INSTALL RADIATOR PIPE (See page EM–50)

17. INSTALL A/C COMPRESSOR AND BRACKET (See page EM–95)

18. INSTALL RADIATOR (See page CO–15)

19. FILL WITH ENGINE OIL

20. INSTALL ENGINE UNDER COVER

21. START ENGINE AND CHECK FOR LEAKS

A INTRODUCTION

This manual consists of the following 11 sections:

No.	Section	Description
A	INDEX	Index of the contents of this manual.
	INTRODUCTION	Brief explanation of each section.
B	HOW TO USE THIS MANUAL	Instructions on how to use this manual.
C	TROUBLE–SHOOTING	Describes the basic inspection procedures for electrical circuits.
D	ABBREVIATIONS	Defines the abbreviations used in this manual.
E	GLOSSARY OF TERMS AND SYMBOLS	Defines the symbols and functions of major parts.
F	RELAY LOCATIONS	Shows position of the Electronic Control Unit, Relays, Relay Block, etc. This section is closely related to the system circuit.
G	ELECTRICAL WIRING ROUTING	Describes position of Parts Connectors, Splice points, Ground points, etc. This section is closely related to the system circuit.
H	POWER SOURCE (Current Flow Chart)	Describes power distribution from the power supply to various electrical loads.
I	INDEX	Index of the system circuits.
	SYSTEM CIRCUITS	Electrical circuits of each system are shown from the power supply through ground points. Wiring connections and their positions are shown and classified by code according to the connection method. (Refer to the section, “How to use this manual”). The “System Outline” and “Service Hints” useful for troubleshooting are also contained in this section.
J	GROUND POINTS	Shows ground positions of all the parts decribed in this manual.
K	OVERALL ELECTRICAL WIRING DIAGRAM	Provides circuit diagrams showing the circuit connections.

This manual provides information on the electrical circuits installed on vehicles by dividing them into a circuit for each system.

The actual wiring of each system circuit is shown from the point where the power source is received from the battery as far as each ground point. (All circuit diagrams are shown with the switches in the OFF position.)

When troubleshooting any problem, first understand the operation of the circuit where the problem was detected (see System Circuit section), the power source supplying power to that circuit (see Power Source section), and the ground points (see Ground Points section). See the System Outline to understand the circuit operation.

When the circuit operation is understood, begin troubleshooting of the problem circuit to isolate the cause. Use Relay Location and Electrical Wiring Routing sections to find each part, junction block and wiring harness connectors, wiring harness and wiring harness connectors, splice points, and ground points of each system circuit. Internal wiring for each junction block is also provided for better understanding of connection within a junction block.

Wiring related to each system is indicated in each system circuit by arrows (from __ ,to __). When overall connections are required, see the Overall Electrical Wiring Diagram at the end of this manual.

* The system shown here is an EXAMPLE ONLY. It is different to the actual circuit shown in the SYSTEM CIRCUITS SECTION.

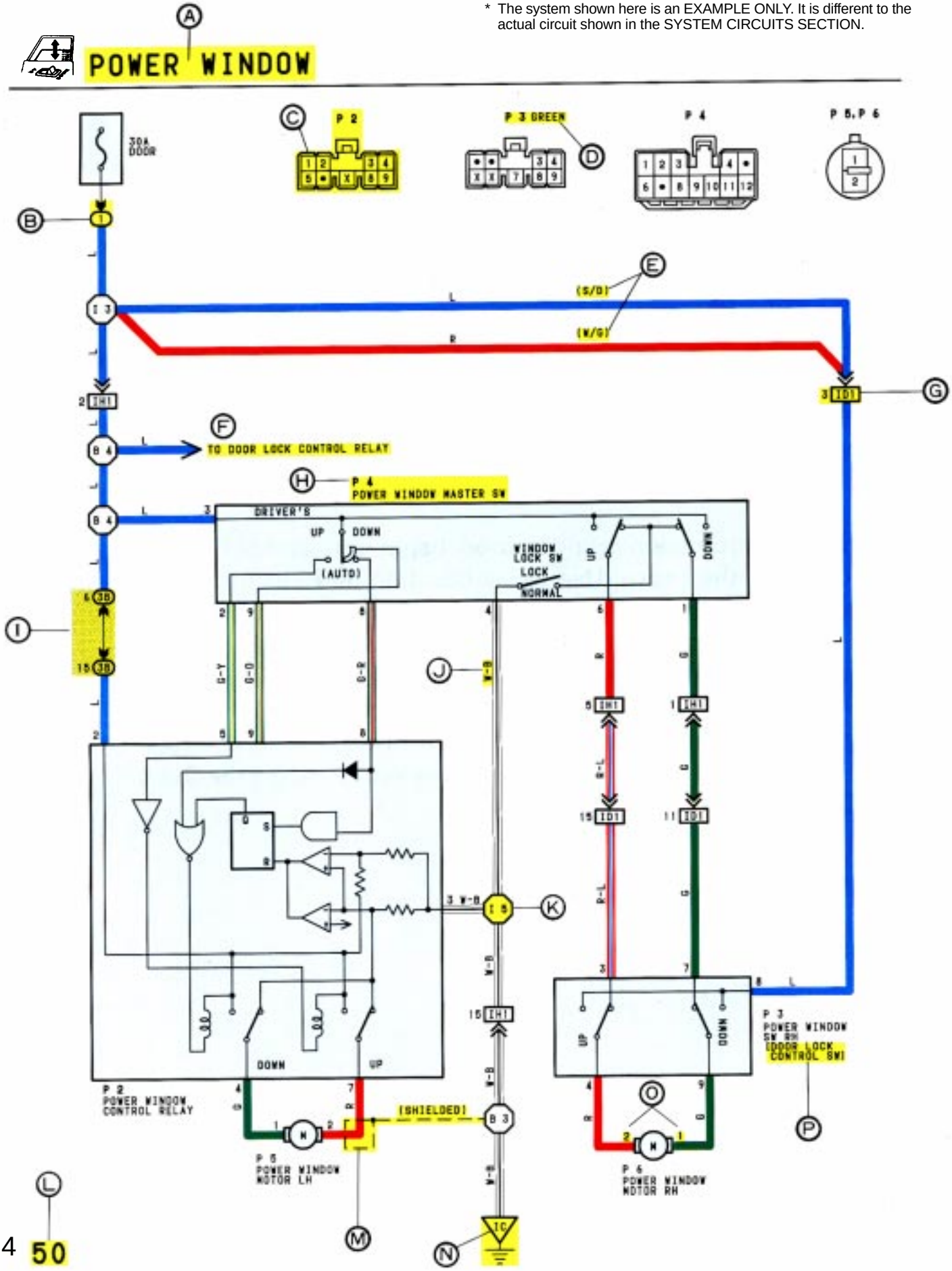

Ⓐ : System Title

Ⓑ : Indicates a Relay Block. No shading is used and only the Relay Block No. is shown to distinguish it from the J/B.

Example: Indicates Relay Block No. 1.

Ⓒ : Indicates the connector to be connected to a part (the numeral indicates the pin No.)

Explanation of pin use.

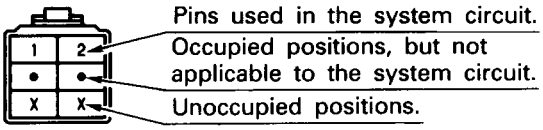

The pins shown are only for the highest grade, or only include those in the specification.

Ⓓ : Connector Color

Connectors not indicated are milky white in color.

Ⓔ : ( ) is used to indicate different wiring and connector, etc. when the vehicle model, engine type, or specification is different.

Ⓕ : Indicates related system.

Ⓖ : Indicates the wiring harness and wiring harness connector. The wiring harness with male terminal is shown with arrows (⩔).

Outside numerals are pin numbers.

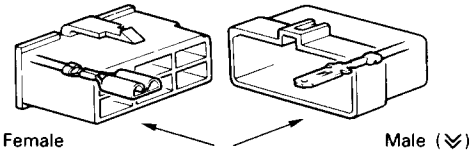

The first letter of the code for each wiring harness and wiring harness connector(s) indicates the component's location, e.g., "E" for the Engine Compartment, "I" for the Instrument Panel and Surrounding area, and "B" for the Body and Surrounding area.

When more than one code has the first and second letters in common, followed by numbers (e.g., IH1, IH2), this indicates the same type of wiring harness and wiring harness connector.

Ⓗ : Represents a part (all parts are shown in sky blue). The code is the same as the code used in parts position.

Ⓘ : Junction Block (The number in the circle is the J/B No. and the connector code is shown beside it). Junction Blocks are shaded to clearly separate them from other parts (different junction blocks are shaded differently for further clarification).

Example:

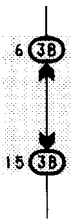

3B indicates that it is inside Junction Block No. 3.

Ⓙ : Indicates the wiring color.

Wire colors are indicated by an alphabetical code.

B	=	Black	L	=	Blue	R	=	Red
BR	=	Brown	LG	=	Light Green	V	=	Violet
G	=	Green	O	=	Orange	W	=	White
GR	=	Gray	P	=	Pink	Y	=	Yellow

The first letter indicates the basic wire color and the second letter indicates the color of the stripe.

Example: L – Y

Ⓚ : Indicates a wiring Splice Point (Codes are "E" for the Engine Room, "I" for the Instrument Panel, and "B" for the Body).

Example:

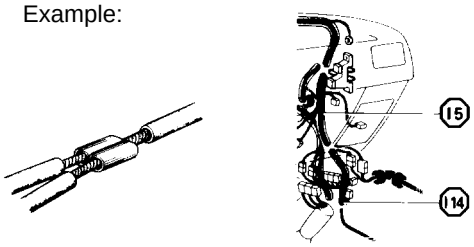

The Location of Splice Point I 5 is indicated by the shaded section.

Ⓛ : Page No.

Ⓜ : Indicates a shielded cable.

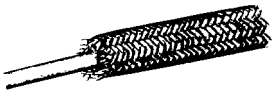

Ⓝ : Indicates a ground point.

The first letter of the code for each ground point(s) indicates the component's location, e.g., "E" for the Engine Compartment, "I" for the Instrument Panel and Surrounding area, and "B" for the Body and Surrounding area.

Ⓞ : Indicates the pin number of the connector.

The numbering system is different for female and male connectors.

Example: Numbered in order from upper left to lower right — Numbered in order from upper right to lower left

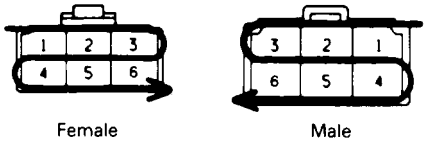

Ⓟ : When 2 parts both use one connector in common, the parts connector name used in the wire routing section is shown in square brackets [ ].

Q

SYSTEM OUTLINE

WITH THE IGNITION SW TURNED ON, THE CURRENT FLOWS TO **TERMINAL 3** OF THE POWER WINDOW MASTER SW, **TERMINAL 2** OF THE POWER WINDOW CONTROL RELAY AND **TERMINAL 8** OF THE POWER WINDOW SW THROUGH THE **DOOR** FUSE.

1. DRIVER'S WINDOW "MANUAL UP" OPERATION BY MASTER SW

HOLDING MANUAL SW (DRIVER'S) ON "UP" POSITION LOCATED IN POWER WINDOW MASTER SW, THE CURRENT FLOWS TO **TERMINAL 5** OF THE POWER WINDOW CONTROL RELAY THROUGH **TERMINAL 3** OF THE MASTER SW → **TERMINAL 2** TO OPERATE A POWER WINDOW CONTROL RELAY. THUS THE CURRENT INSIDE THE RELAY FLOWS FROM **TERMINAL 2** OF THE RELAY → **TERMINAL 1** → **TERMINAL 2** OF THE POWER WINDOW MOTOR → **TERMINAL 1** → **TERMINAL 4** OF THE RELAY → **TERMINAL 3** → TO **GROUND**. THE MOTOR TURNS TO ASCENT THE WINDOW. RELEASING THIS SW, THE ROTATION OF MOTOR IS STOPPED AND THE WINDOWS CAN STOP AT WILL POINT.

(FOR THE "MANUAL DOWN" OPERATION, CURRENT FLOWS IN THE REVERSE DIRECTION BECAUSE THE TERMINALS WHERE IT FLOW ARE CHANGED).

2. DRIVER'S WINDOW "AUTO DOWN" OPERATION BY MASTER SW

ONCE THE "AUTO DOWN" BUTTON OF THE MASTER SW IS PUSHED, THE CURRENT FLOW **TERMINAL 9** OF THE POWER WINDOW CONTROL RELAY THROUGH **TERMINAL 3** OF THE MASTER SW → **TERMINALS 8** AND **9** TO OPERATE THE RELAY. THUS THE CURRENT INSIDE THE POWER WINDOW CONTROL RELAY FLOWS FROM **TERMINAL 2** OF THE RELAY → **TERMINAL 4** → **TERMINAL 1** OF THE POWER WINDOW MOTOR → **TERMINAL 2** → **TERMINAL 1** OF THE RELAY → **TERMINAL 3** → TO **GROUND**. THE MOTOR CONTINUES THE ROTATION ENABLING TO DESCENT THE WINDOW.

THE WINDOW DESCENDS TO THE END POSITION. THE CURRENT WILL BE CUT OFF TO RELEASE THE AUTO DOWN FUNCTION BASED ON THE INCREASING CURRENT BETWEEN **TERMINAL 2** OF THE RELAY AND **TERMINAL 1** IN RELAY.

3. DRIVER'S WINDOW AUTO DOWN RELEASE OPERATION BY MASTER SW

HOLDING THE MANUAL SW (DRIVER'S) ON "UP" POSITION IN OPERATING AUTO DOWN. THE CURRENT FROM **TERMINAL 3** OF THE MASTER SW PASSING **TERMINAL 2** FLOWS **TERMINAL 5** OF THE RELAY AND RELEASES THE AUTO DOWN FUNCTION IN THE POWER WINDOW CONTROL RELAY. RELEASING THE HAND FROM SW, WINDOW STOPS AND CONTINUING ON TOUCHING SW, THE FUNCTION SWITCHES TO MANUAL UP OPERATION.

4. PASSENGER'S WINDOW UP OPERATION (MASTER SW) AND WINDOW LOCK SW OPERATION

HOLDING PASSENGER'S WINDOW SW (MASTER SW) ON "UP", THE CURRENT FLOWS FROM **TERMINAL 3** OF THE MASTER SW PASSING **TERMINAL 6** TO **TERMINAL 3** OF THE POWER WINDOW SW (PASSENGER'S) → **TERMINAL 4** → **TERMINAL 2** OF THE MOTOR → **TERMINAL 1** → **TERMINAL 9** OF THE POWER WINDOW SW → **TERMINAL 7** → **TERMINAL 1** OF THE MASTER SW → **TERMINAL 4** TO **GROUND**. THE MOTOR RUNS TO ASCENT THE WINDOW. RELEASING THIS SW, THE ROTATION OF MOTOR IS STOPPED AND WINDOW CAN STOP AT WILL PLACE.

SWITCHING THE WINDOW LOCK SW IN "LOCK" POSITION, THE CIRCUIT IS OPENED AND STOPPED THE MOTOR ROTATION.

(FOR THE DOWN OPERATION, CURRENT FLOWS IN THE REVERSE DIRECTION BECAUSE THE TERMINALS WHERE IT FLOWS ARE CHANGED).

R

SERVICE HINTS

P 2 POWER WINDOW CONTROL RELAY

3–GROUND: ALWAYS CONTINUITY

2–GROUND: APPROX. **12** VOLTS WITH THE IGNITION SW AT **ON** POSITION

5–GROUND: APPROX. **12** VOLTS WITH THE IGNITION SW AT **ON** POSITION AND THE MASTER SW AT **UP** POSITION

8–GROUND: APPROX. **12** VOLTS WITH THE IGNITION SW AT **ON** POSITION AND THE MASTER SW AT **AUTO DOWN** POSITION

9–GROUND: APPROX. **12** VOLTS WITH THE IGNITION SW AT **ON** POSITION AND THE MASTER SW AT **DOWN** OR **AUTO DOWN** POSITION

P 4 POWER WINDOW MASTER SW

4–GROUND: ALWAYS CONTINUITY

3–GROUND: APPROX. **12** VOLTS WITH THE IGNITION SW AT **ON** POSITION

WINDOW LOCK SW

OPEN WITH THE WINDOW LOCK SW AT **LOCK** POSITION

S

: PARTS LOCATION

CODE	SEE PAGE	CODE	SEE PAGE	CODE	SEE PAGE
P 2	21	**P 4**	21	**P 6**	21
P 3	21	**P 5**	21		

T

: RELAY BLOCKS

CODE	SEE PAGE	RELAY BLOCK (RELAY BLOCK LOCATION)
1	16	R/B NO. 1 (INSTRUMENT PANEL LEFT)

U

: JUNCTION BLOCK AND WIRE HARNESS CONNECTOR

CODE	SEE PAGE	JUNCTION BLOCK AND WIRE HARNESS (CONNECTOR LOCATION)
3B	14	J/B NO. 3 AND COWL WIRE (INSTRUMENT PANEL LEFT SIDE)

V

: CONNECTOR JOINING WIRE HARNESS AND WIRE HARNESS

CODE	SEE PAGE	JOINING WIRE HARNESS AND WIRE HARNESS (CONNECTOR LOCATION)
ID1	26	FRONT DOOR RH WIRE AND COWL WIRE (RIGHT KICK PANEL)
IH1	26	FRONT DOOR LH WIRE AND COWL WIRE (LEFT KICK PANEL)

W

: GROUND POINTS

CODE	SEE PAGE	GROUND POINT LOCATION
IC	24	COWL LEFT

X

: SPLICE POINTS

CODE	SEE PAGE	WIRE HARNESS WITH SPLICE POINTS	CODE	SEE PAGE	WIRE HARNESS WITH SPLICE POINTS
I 5	24	COWL WIRE			

Ⓠ : Explains the system outline.

Ⓡ : Indicates values or explains the function for reference during troubleshooting.

Ⓢ : Indicates the reference page showing the position on the vehicle of the parts in the system circuit.

Example: Part “P 4” (Power Window Master SW) is on page 21 of the manual.

* The letter in the code is from the first letter of the part, and the number indicates its order in parts starting with the letter.

Example: P 4

Part is 4th in order

Power Window Master SW

Ⓣ : Indicates the reference page showing the position on the vehicle of Relay Block Connectors in the system circuit.

Example: Connector “1” is described on page 16 of this manual and is installed on the left side of the instrument panel.

Ⓤ : Indicates the reference page showing the position on the vehicle of J/B and Wire Harness in the system circuit.

Example: Connector “3B”connects the Cowl Wire and J/B No. 3. It is described on page 14 of this manual, and is installed on the instrument panel left side.

Ⓥ : Indicates the reference page describing the wiring harness and wiring harness connector (the female wiring harness is shown first, followed by the male wiring harness).

Example: Connector “ID1”connects the front door RH wire (female) and cowl wire (male). It is described on page 26 of this manual, and is installed on the right side kick panel.

Ⓦ : Indicates the reference page showing the position of the ground points on the vehicle.

Example: Ground point “IC” is described on page 24 of this manual and is installed on the cowl left side.

Ⓧ : Indicates the reference page showing the position of the splice points on the vehicle.

Example: Splice point “I 5” is on the Cowl Wire Harness and is described on page 24 of this manual.

HINT:

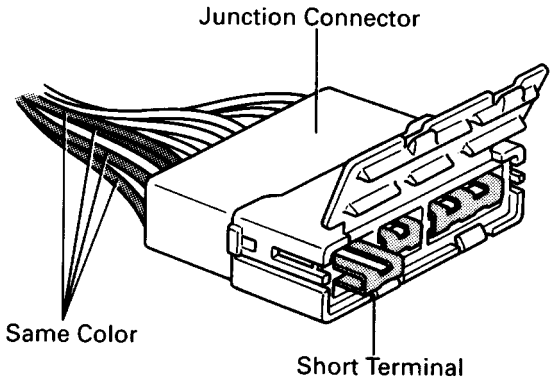

Junction connector (code: J1, J2, J3, J4, J5, J6, J7, J8, J9) in this manual include a short terminal which is connected to a number of wire harnesses. Always perform inspection with the short terminal installed. (When installing the wire harnesses, the harnesses can be connected to any position within the short terminal grouping. Accordingly, in other vehicles, the same position in the short terminal may be connected to a wire harness from a different part.)

Wire harness sharing the same short terminal grouping have the same color.

B HOW TO USE THIS MANUAL

The “Current Flow Chart” section, describes which parts each power source (fuses, fusible links, and circuit breakers) transmits current to. In the Power Source circuit diagram, the conditions when battery power is supplied to each system are explained. Since all System Circuit diagrams start from the power source, the power source system must be fully understood.

H POWER SOURCE (Current Flow Chart)

The chart below shows the route by which current flows from the battery to each electrical source (Fusible Link, Circuit Breaker, Fuse, etc.) and other parts.

The next page and following pages show the parts to which each electrical source outputs current.

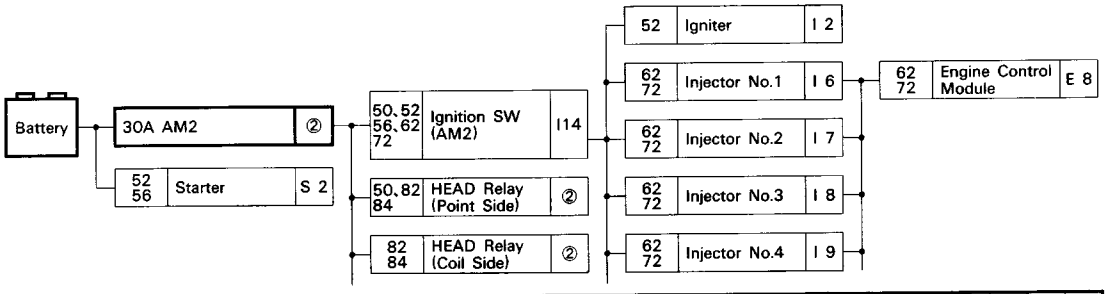

Location	CB or Fuse		ABS Actuator	ABS Relay		ADD Indicator SW	Auto Antenna Motor	ABS Deceleration Sensor	ABS ECU		A/C Amplifier	A/C Dual Pressure SW	A/C SW	ADD Control Relay	Airbag Sencor Assembly	Ashtray Illumination	Auto Antenna Control Relay	Back-Up Light SW	Brake Fluid Level Warning SW	Back-Up Light Relay	Cigarette Lighter	Cigarette Lighter Illumination	Circuit Opening Relay	Clock
	Page Nos. of Related Systems		120		132 138	166	120	120 132 138		120	174		90 174	138	127	90	166 168	98	170	98	164	90	62 72	164
			A 2	A 3	A 4	A 6	A 8	A 9	A10	A11	A12	A13	A14	A16	A17	A19	A20	B 1	B 2	B 3	C 4	C 5	C 6	C 7
	15A	ECU-B							●						●									
	10A	GAUGE	●		●	●			●	●							●	●	●	●				
	10A	TURN																						
①	15A	ECU-IG						●	●															

POWER SOURCE

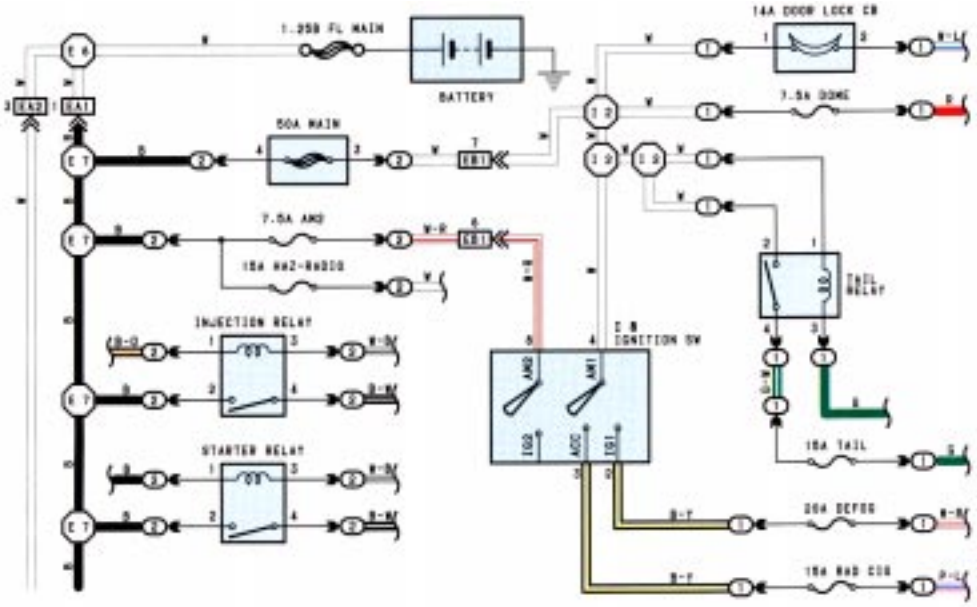

* The system shown here is an EXAMPLE ONLY. It is different to the actual circuit shown in the SYSTEM CIRCUITS SECTION.

The ground points circuit diagram shows the connections from all major parts to the respective ground points. When troubleshooting a faulty ground point, checking the system circuits which use a common ground may help you identify the problem ground quickly. The relationship between ground points (EA , IB , and IC shown below) can also be checked this way.

J GROUND POINT

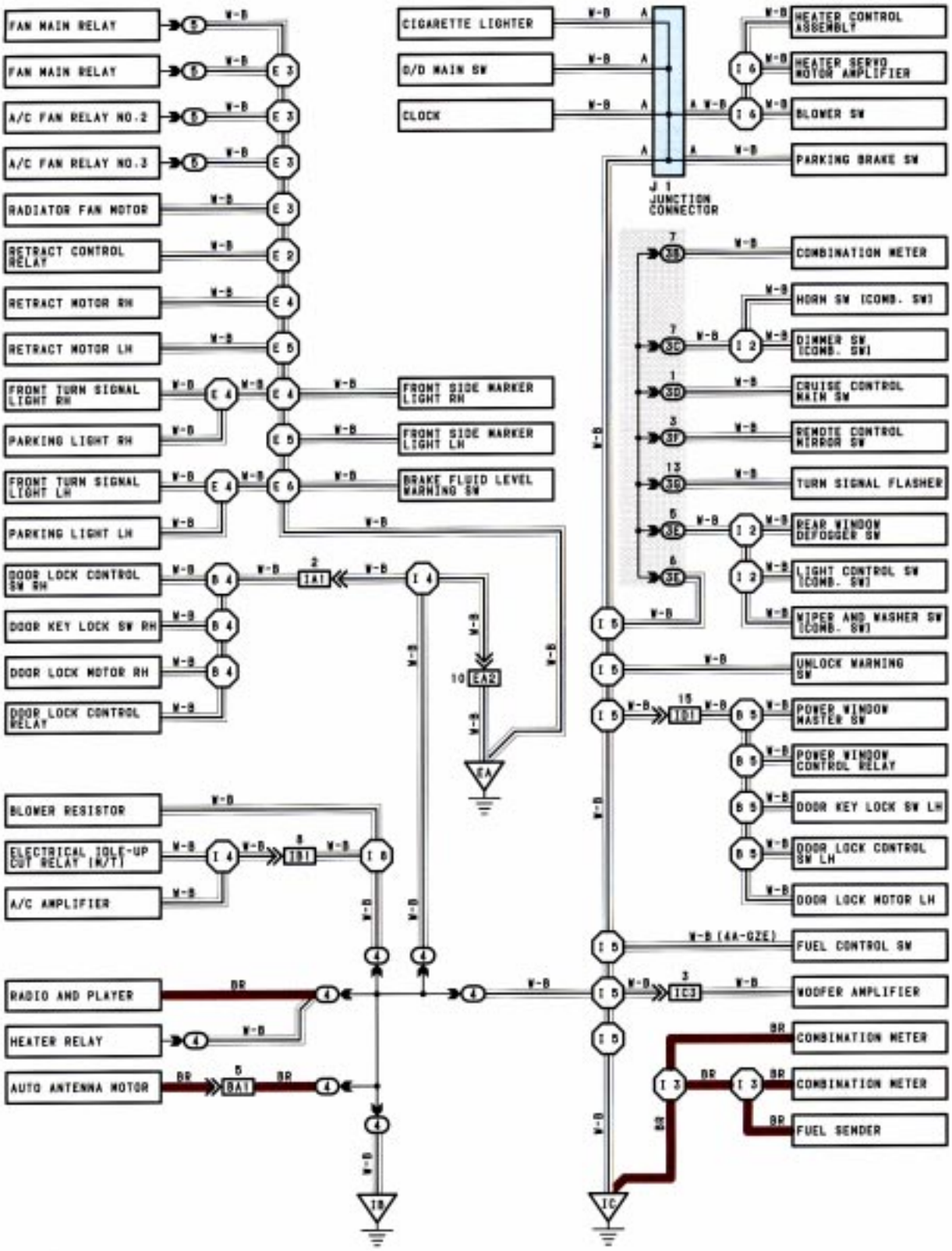

* The system shown here is an EXAMPLE ONLY. It is different to the actual circuit shown in the SYSTEM CIRCUITS SECTION.

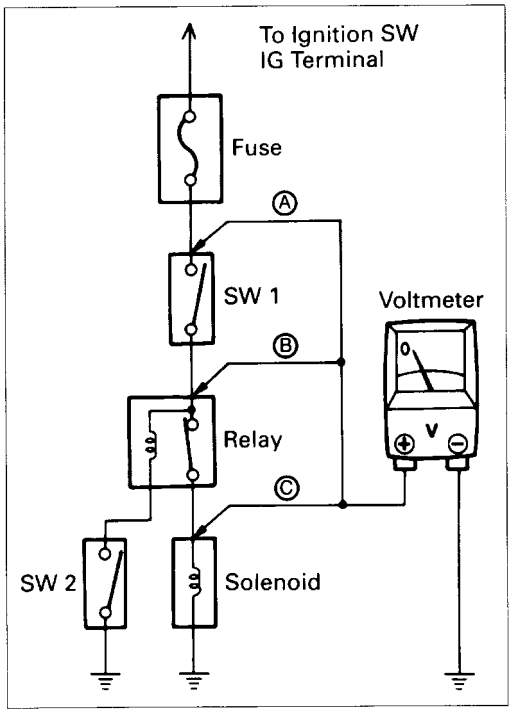

VOLTAGE CHECK

(a) Establish conditions in which voltage is present at the check point.

Example:

Ⓐ – Ignition SW on

Ⓑ – Ignition SW and SW 1 on

Ⓒ – Ignition SW, SW 1 and Relay on (SW2 off)

(b) Using a voltmeter, connect the negative lead to a good ground point or negative battery terminal, and the positive lead to the connector or component terminal. This check can be done with a test light instead of a voltmeter.

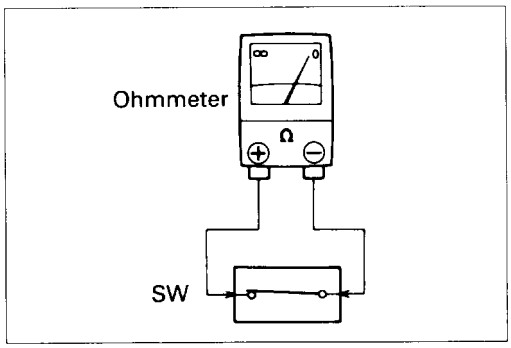

CONTINUITY AND RESISTANCE CHECK

(a) Disconnect the battery terminal or wire so there is no voltage between the check points.

(b) Contact the two leads of an ohmmeter to each of the check points.

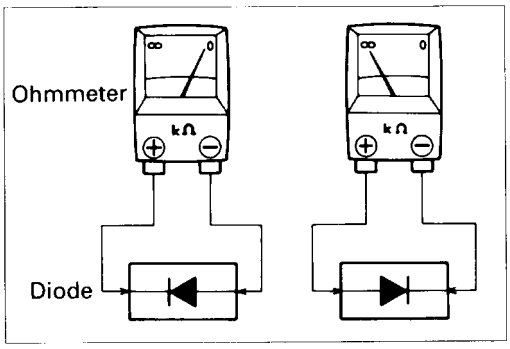

If the circuit has diodes, reverse the two leads and check again.

When contacting the negative lead to the diode positive side and the positive lead to the negative side, there should be continuity.

When contacting the two leads in reverse, there should be no continuity.

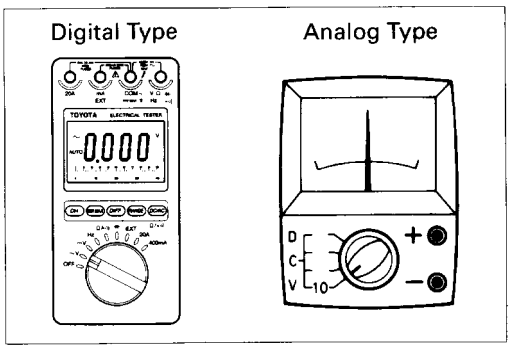

(c) Use the volt/ohmmeter with high impedance (10 kΩ/V minimum) for troubleshooting of the electrical circuit.

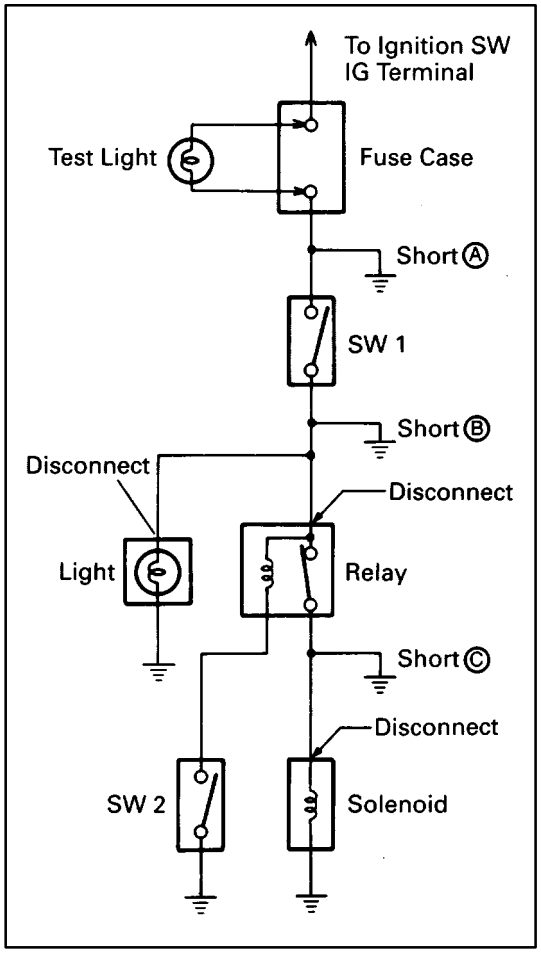

FINDING A SHORT CIRCUIT

(a) Remove the blown fuse and disconnect all loads of the fuse.

(b) Connect a test light in place of the fuse.

(c) Establish conditions in which the test light comes on.

Example:

Ⓐ – Ignition SW on

Ⓑ – Ignition SW and SW 1 on

Ⓒ – Ignition SW, SW 1 and Relay on (Connect the Relay) and SW 2 off (or Disconnect SW 2)

(d) Disconnect and reconnect the connectors while watching the test light.

The short lies between the connector where the test light stays lit and the connector where the light goes out.

(e) Find the exact location of the short by lightly shaking the problem wire along the body.

CAUTION:

(a) Do not open the cover or the case of the ECU unless absolutely necessary. (If the IC terminals are touched, the IC may be destroyed by static electricity.)

(b) When replacing the internal mechanism (ECU part) of the digital meter, be careful that no part of your body or clothing comes in contact with the terminals of leads from the IC, etc. of the replacement part (spare part).

DISCONNECTION OF MALE AND FEMALE CONNECTORS

To pull apart the connectors, pull on the connector itself, not the wire harness.

HINT: Check to see what kind of connector you are disconnecting before pulling apart.

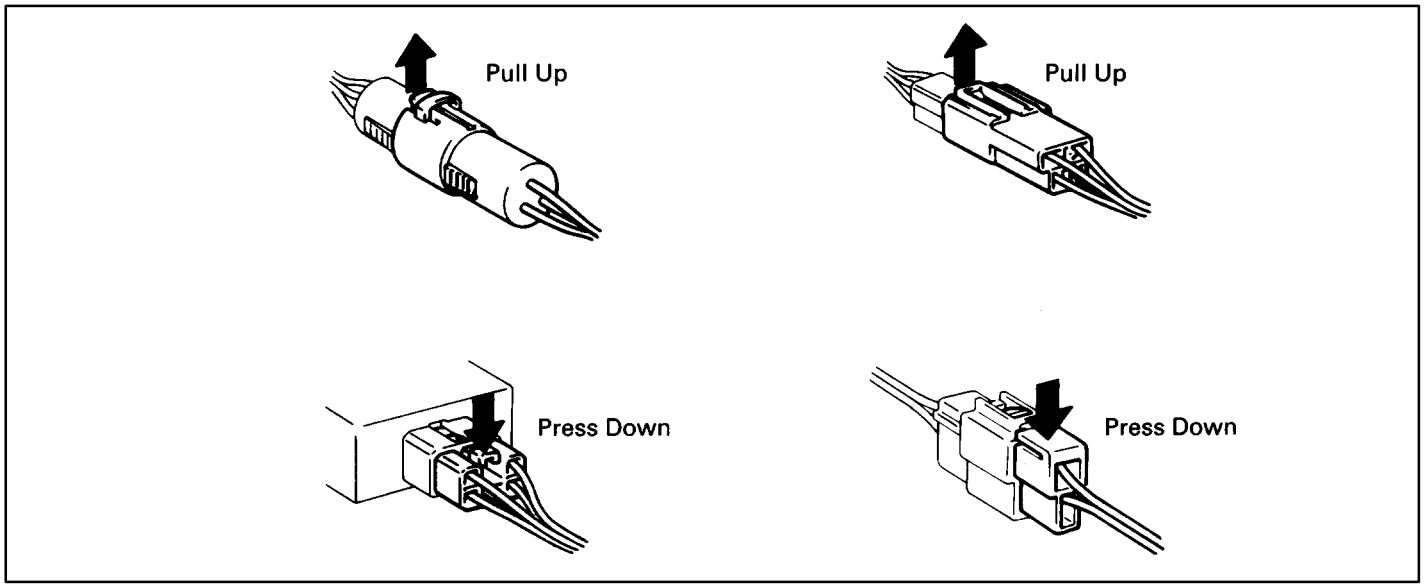

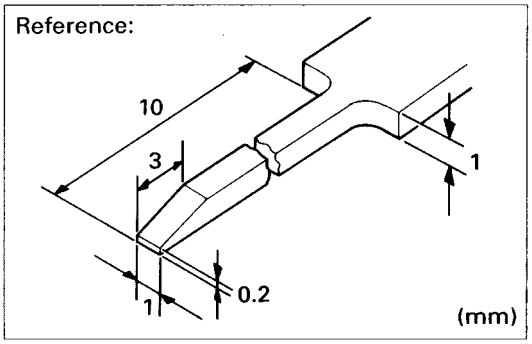

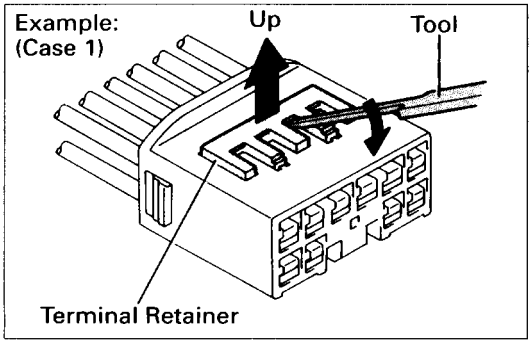

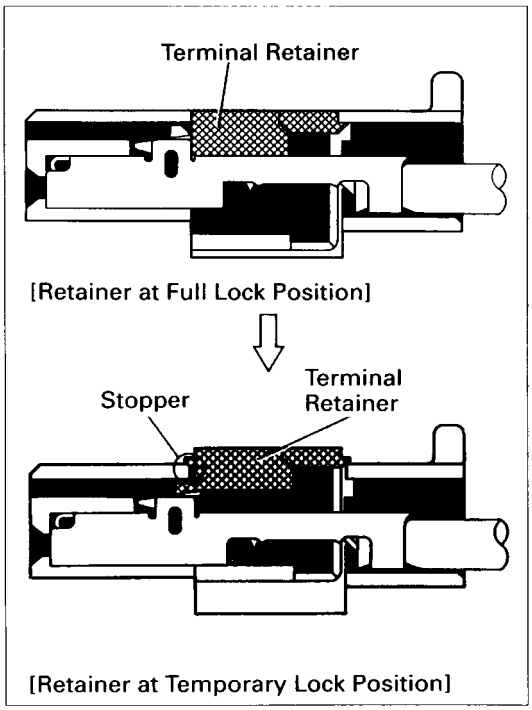

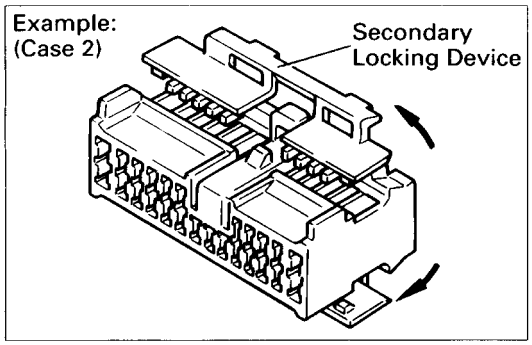

HOW TO REPLACE TERMINAL

(with terminal retainer or secondary locking device)

1. PREPARE THE SPECIAL TOOL

   HINT: To remove the terminal from the connector, please construct and use the special tool or like object shown on the left.

2. DISCONNECT CONNECTOR

3. DISENGAGE THE SECONDARY LOCKING DEVICE OR TERMINAL RETAINER

   (a) Locking device must be disengaged before the terminal locking clip can be released and the terminal removed from the connector.

   (b) Use a special tool or the terminal pick to unlock the secondary locking device or terminal retainer.

   NOTICE:

   Do not remove the terminal retainer from connector body.

   Ⓐ For Non–Waterproof Type Connector

   HINT: The needle insertion position varies according to the connector's shape (number of terminals etc.), so check the position before inserting it.

   "Case 1"

   Raise the terminal retainer up to the temporary lock position.

   "Case 2"

   Open the secondary locking device.

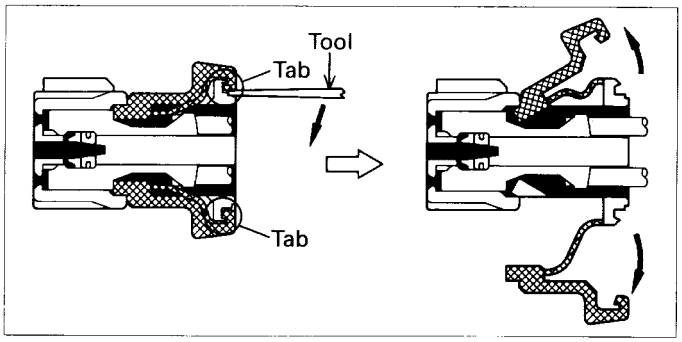

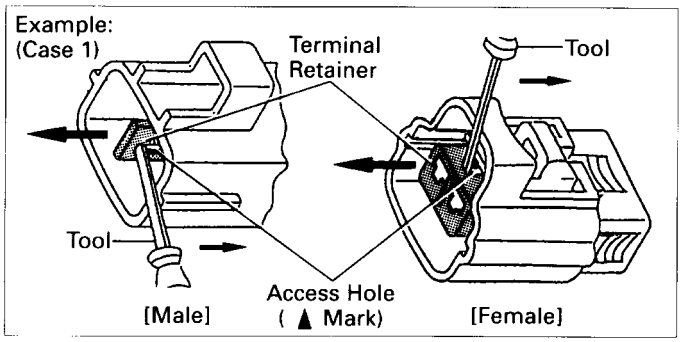

Ⓑ For Waterproof Type Connector

HINT: Terminal retainer color is different according to connector body.

Example:

Terminal Retainer	Connector Body
Black or White	: Gray
Black or White	: Dark Gray
Gray or White	: Black

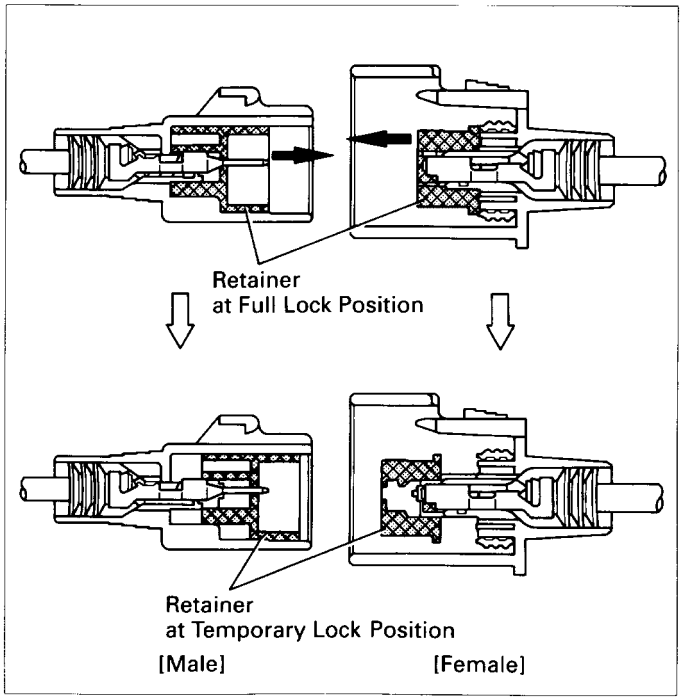

"Case 1"

Type where terminal retainer is pulled up to the temporary lock position (Pull Type).

Insert the special tool into the terminal retainer access hole (▲ Mark) and pull the terminal retainer up to the temporary lock position.

HINT: The needle insertion position varies according to the connector's shape (number of terminals, etc.), so check the position before inserting it.

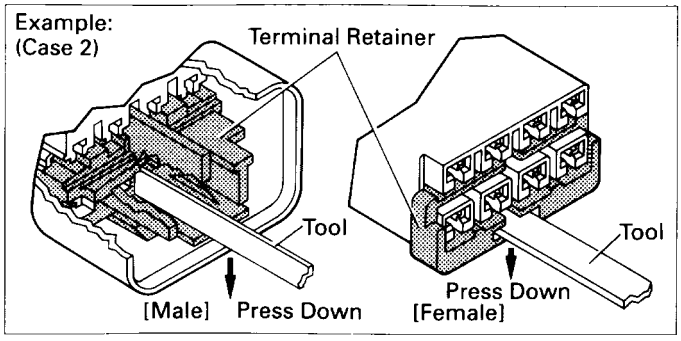

"Case 2"

Type which cannot be pulled as far as Power Lock insert the tool straight into the access hole of terminal retainer as shown.

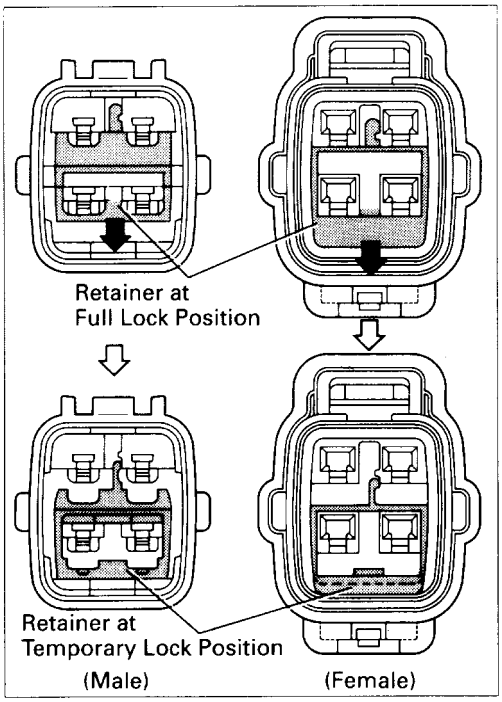

Push the terminal retainer down to the temporary lock position.

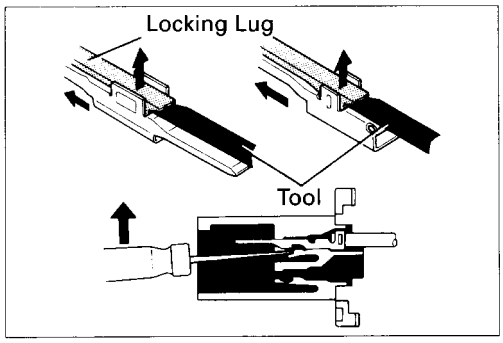

(c) Release the locking lug from terminal and pull the terminal out from rear.

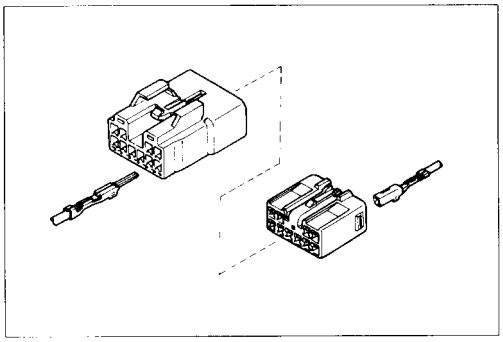

4. INSTALL TERMINAL TO CONNECTOR

(a) Insert the terminal.

HINT:

1. Make sure the terminal is positioned correctly.
2. Insert the terminal until the locking lug locks firmly.
3. Insert the terminal with terminal retainer in the temporary lock position.

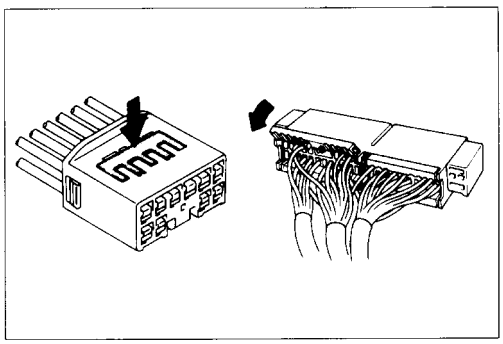

(b) Push the secondary locking device or terminal retainer into the full lock position.

5. CONNECT CONNECTOR

ABBREVIATIONS

The following abbreviations are used in this manual.

ABS	=	Anti–Lock Brake System
A/C	=	Air Conditioning
A/T	=	Automatic Transmission
CD	=	Compact Disc
COMB.	=	Combination
DIFF.	=	Differential
ECU	=	Electronic Control Unit
EGR	=	Exhaust Gas Recirculation
ESA	=	Electronic Spark Advance
FL	=	Fusible Link
LH	=	Left–Hand
O/D	=	Overdrive
R/B	=	Relay Block
RH	=	Right–Hand
SFI	=	Sequential Multiport Fuel Injection
SRS	=	Supplemental Restraint System
SW	=	Switch
TEMP.	=	Temperature
VSV	=	Vacuum Switching Valve
W/	=	With
W/O	=	Without

* The titles given inside the components are the names of the terminals (terminal codes) and are not treated as being abbreviations.

E GLOSSARY OF TERMS AND SYMBOLS

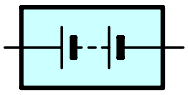

BATTERY

Stores chemical energy and converts it into electrical energy. Provides DC current for the auto's various electrical circuits.

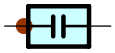

CAPACITOR (Condenser)

A small holding unit for temporary storage of electrical voltage.

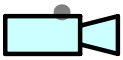

CIGARETTE LIGHTER

An electric resistance heating element.

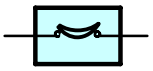

CIRCUIT BREAKER

Basically a reusable fuse, a circuit breaker will heat and open if too much current flows through it. Some units automatically reset when cool, others must be manually reset.

DIODE

A semiconductor which allows current flow in only one direction.

DIODE, ZENER

A diode which allows current flow in one direction but blocks reverse flow only up to a specific voltage. Above that potential, it passes the excess voltage. This acts as a simple voltage regulator.

PHOTODIODE

The photodiode is a semiconductor which controls the current flow according to the amount of light.

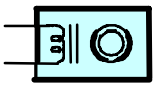

DISTRIBUTOR, IIA

Channels high–voltage current from the ignition coil to the individual spark plugs.

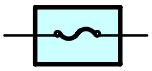

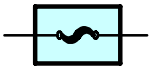

(for Medium Current Fuse)

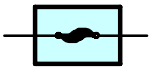

(for High Current Fuse or Fusible Link.)

FUSE

A thin metal strip which burns through when too much current flows through it, thereby stopping current flow and protecting a circuit from damage.

FUSIBLE LINK

A heavy–gauge wire placed in high amperage circuits which burns through on overloads, thereby protecting the circuit. The numbers indicate the cross–section surface area of the wires.

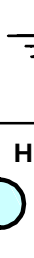

HEADLIGHTS

1. SINGLE FILAMENT

2. DOUBLE FILAMENT

Current flow causes a headlight filament to heat up and emit light. A headlight may have either a single (1) filament or a double (2) filament.

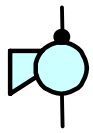

HORN

An electric device which sounds a loud audible signal.

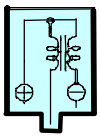

IGNITION COIL

Convert low–voltage DC current into high–voltage ingition current for firing the spark plugs.

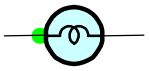

LIGHT

Current flow through a filament causes the filament to heat up and emit light.

LED (LIGHT EMITTING DIODE)

Upon current flow, these diodes emit light without producing the heat of a comparable light.

METER, ANALOG

Current flow activates a magnetic coil which causes a needle to move, thereby providing a relative display against a background calibration.

METER, DIGITAL

Current flow activates one or many LED's, LCD's, or fluorescent displays, which provide a relative or digital display.

MOTOR

A power unit which converts electrical energy into mechanical energy, especially rotary motion.

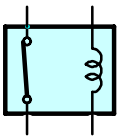

RELAY

1. NORMALLY CLOSED

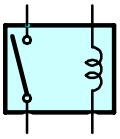

2. NORMALLY OPEN

Basically, an electrically operated switch which may be normally closed (1) or open (2).

Current flow through a small coil creates a magnetic field which either opens or closes an attached switch.

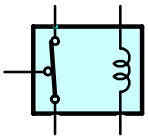

RELAY, DOUBLE THROW

A relay which passes current through one set of contacts or the other.

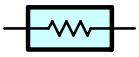

RESISTOR

An electrical component with a fixed resistance, placed in a circuit to reduce voltage to a specific value.

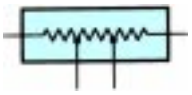

RESISTOR, TAPPED

A resistor which supplies two or more different non adjustable resistance values.

RESISTOR, VARIABLE OR RHEOSTAT

A controllable resistor with a variable rate of resistance. Also called a potentiometer or rheostat.

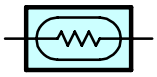

SENSOR (Thermistor)

A resistor which varies its resistance with temperature.

SENSOR, SPEED

Uses magnetic impulses to open and close a switch to create a signal for activation of other components.

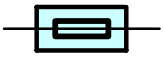

SHORT PIN

Used to provide an unbroken connection within a juction block.

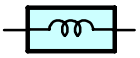

SOLENOID

An electromagnetic coil which forms a magnetic field when current flows, to move a plunger, etc.

SPEAKER

An electromechanical device which creates sound waves from current flow.

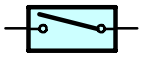

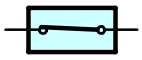

SWITCH, MANUAL

1. NORMALLY OPEN

2. NORMALLY CLOSED

Opens and closes circuits, thereby stopping (1) or allowing (2) current flow.

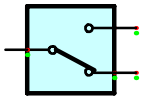

SWITCH, DOUBLE THROW

A switch which continuously passes current through one set of contacts or the other.

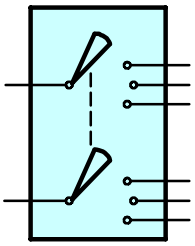

SWITCH, IGNITION

A key operated switch with several positions which allows various circuits, particularly the primary ignition circuit, to become operational.

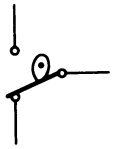

SWITCH, WIPER PARK

Automatically returns wipers to the stop position when the wiper switch is turned off.

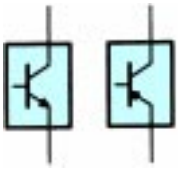

TRANSISTOR

A solid state device typically used as an electronic relay; stops or passes current depending on the voltage applied at “base.”

WIRES

(1) NOT CONNECTED

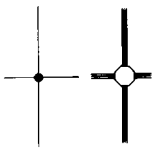

(2) SPLICED

Wires are always drawn as straight lines on wiring diagrams. Crossed wires (1) without a black dot at the junction are not joined; crossed wires (2) with a black dot or octagonal (⬡) mark at the juction as spliced (joined) connections.

F RELAY LOCATIONS

[Engine Compartment]

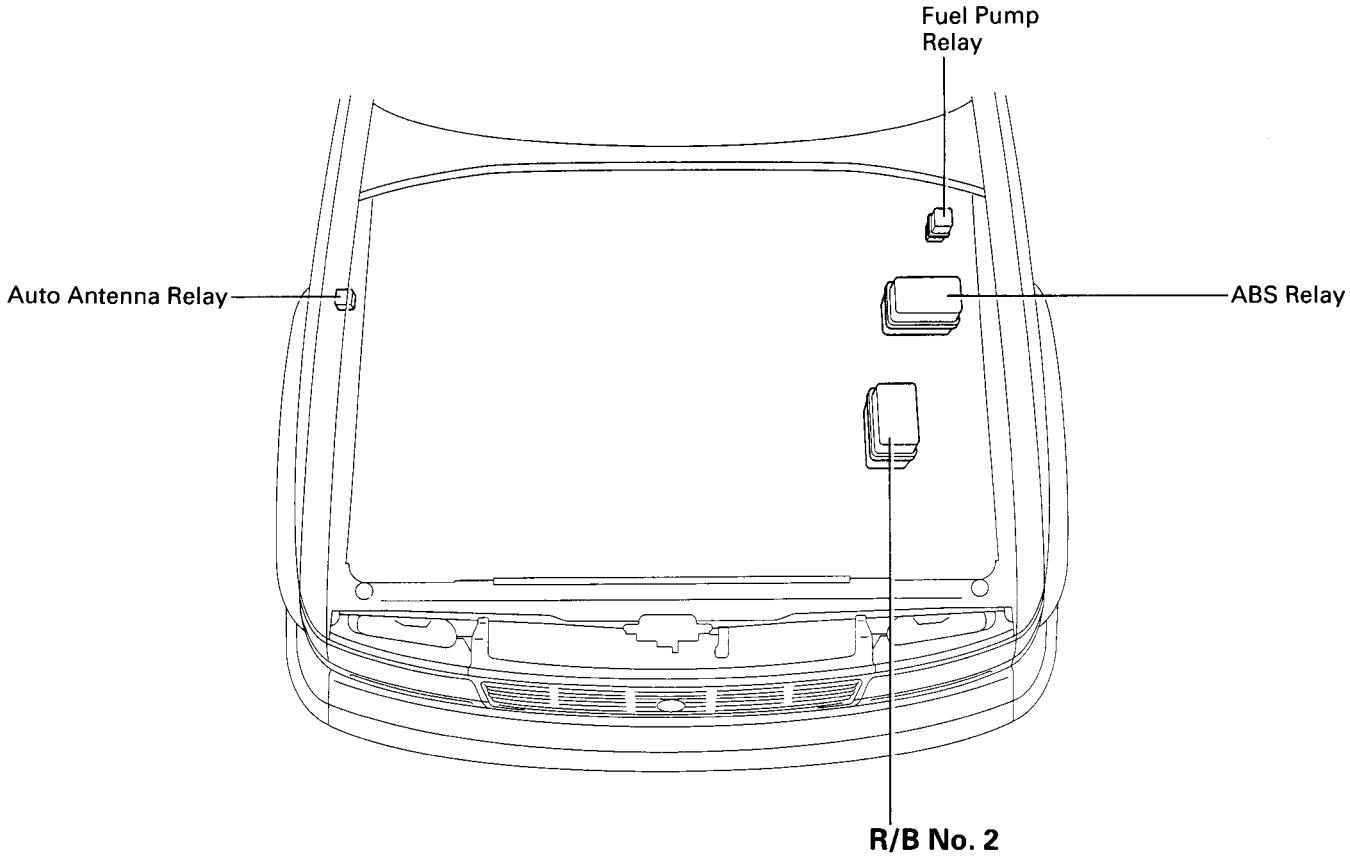

② : R/B No. 2	Front Side of Left Fender

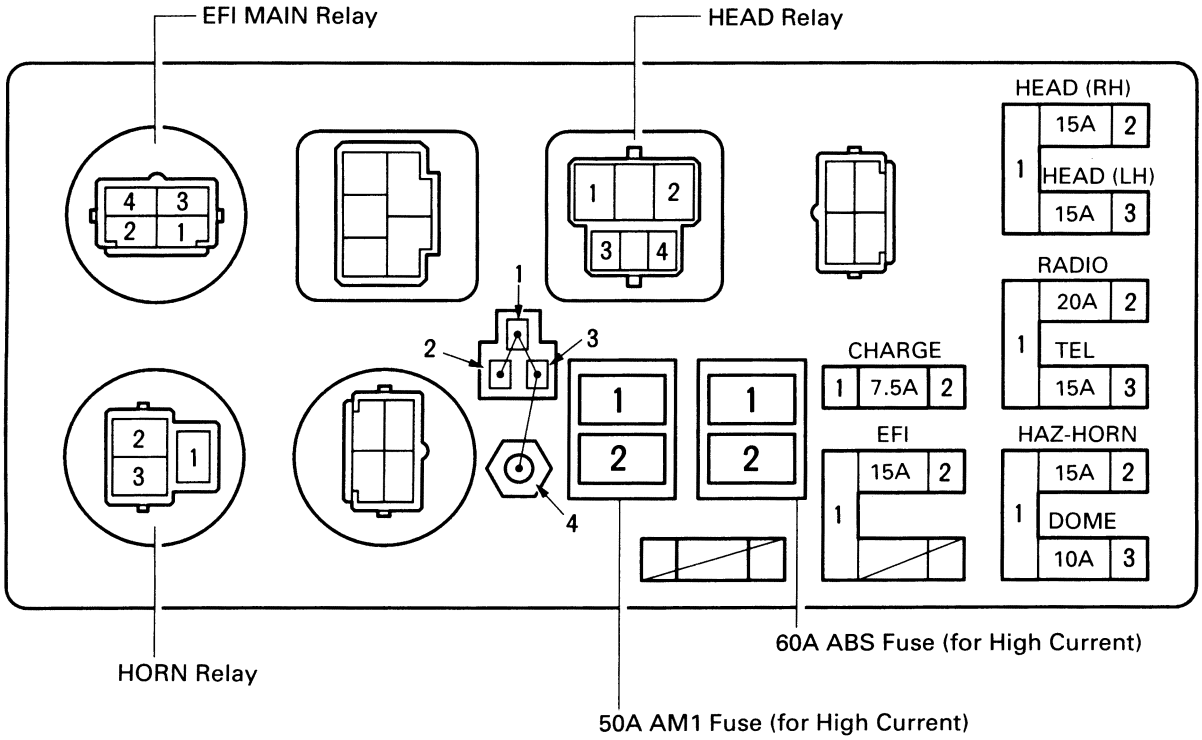

[Instrument Panel]

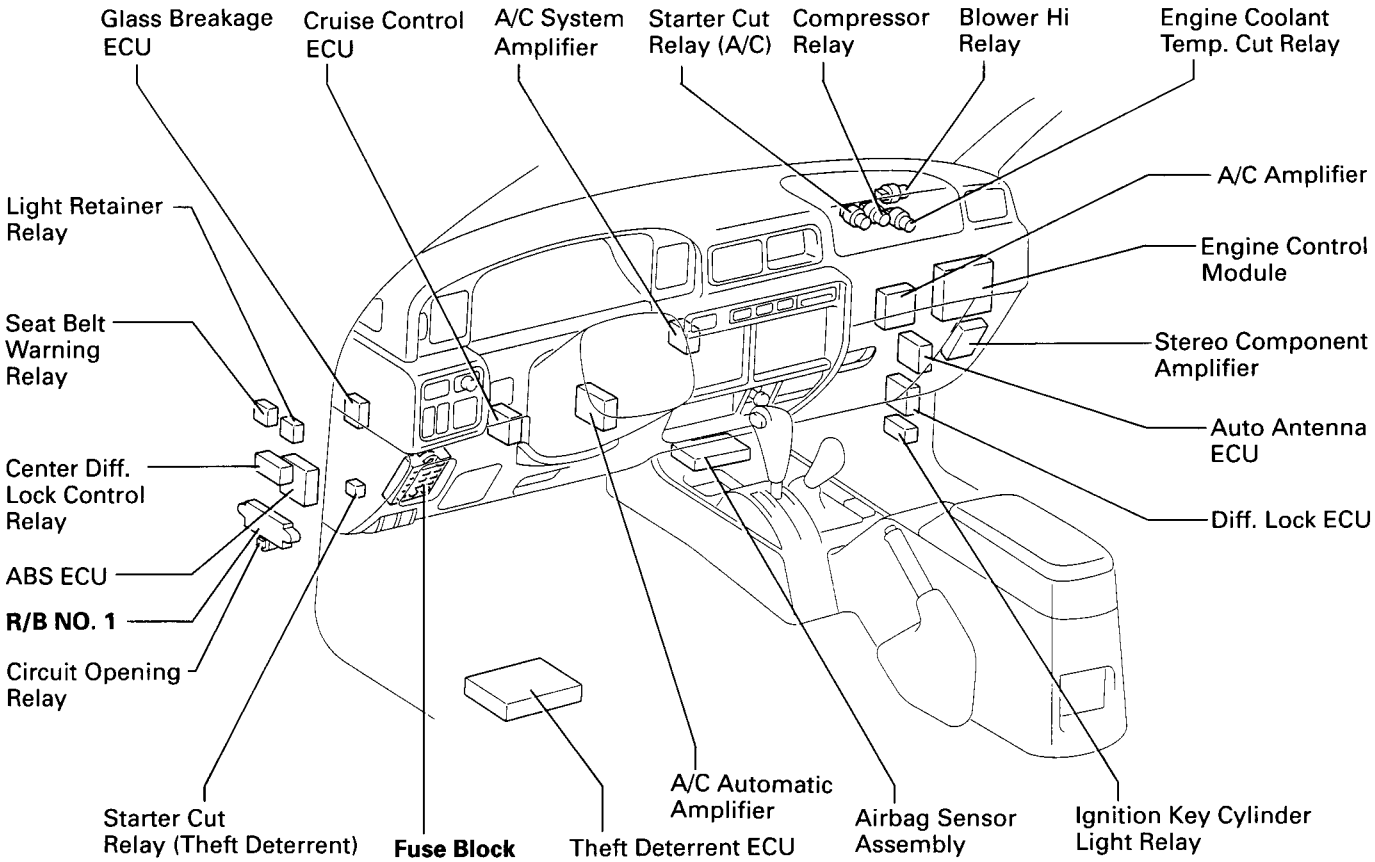

[Body]

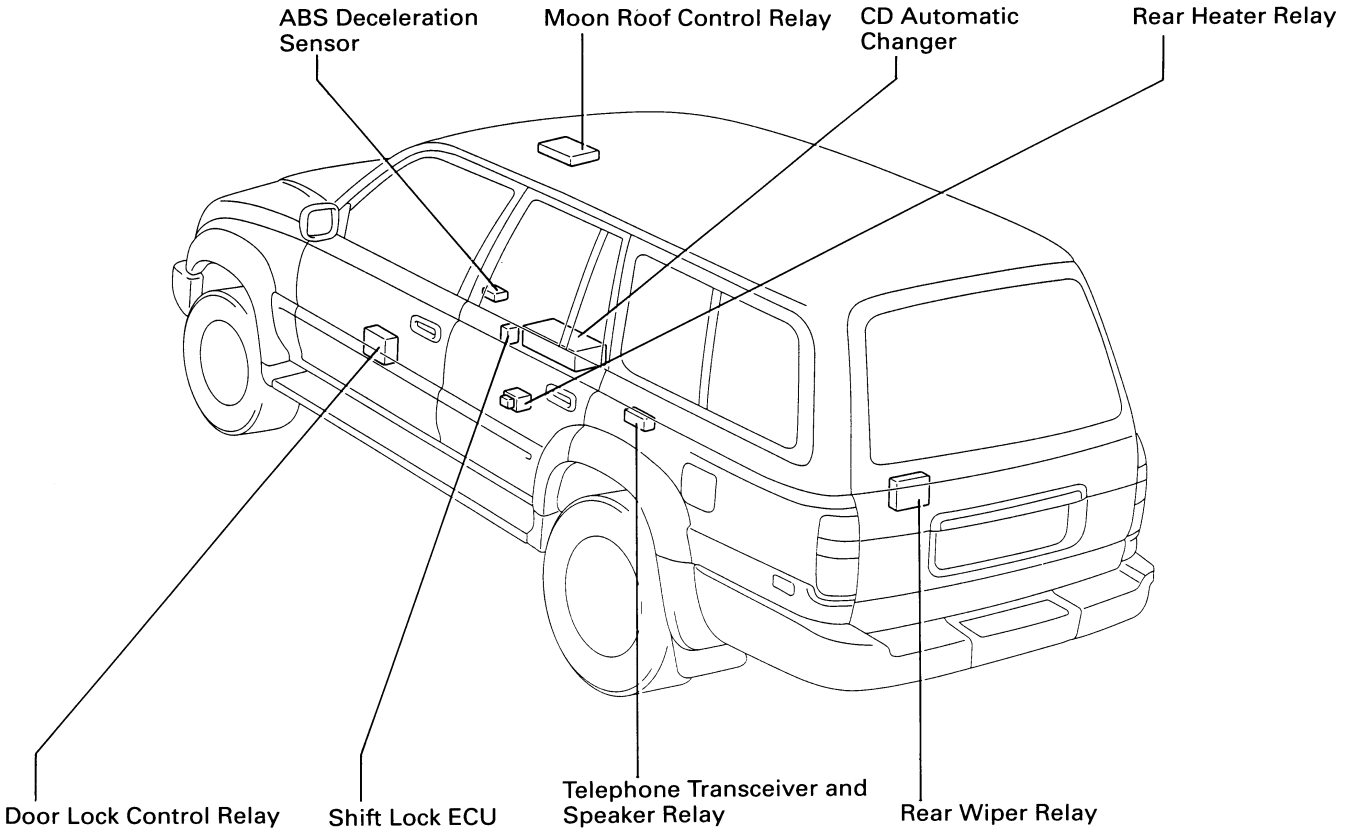

F RELAY LOCATIONS

① : R/B No. 1	Left Kick Panel (See Page 19)

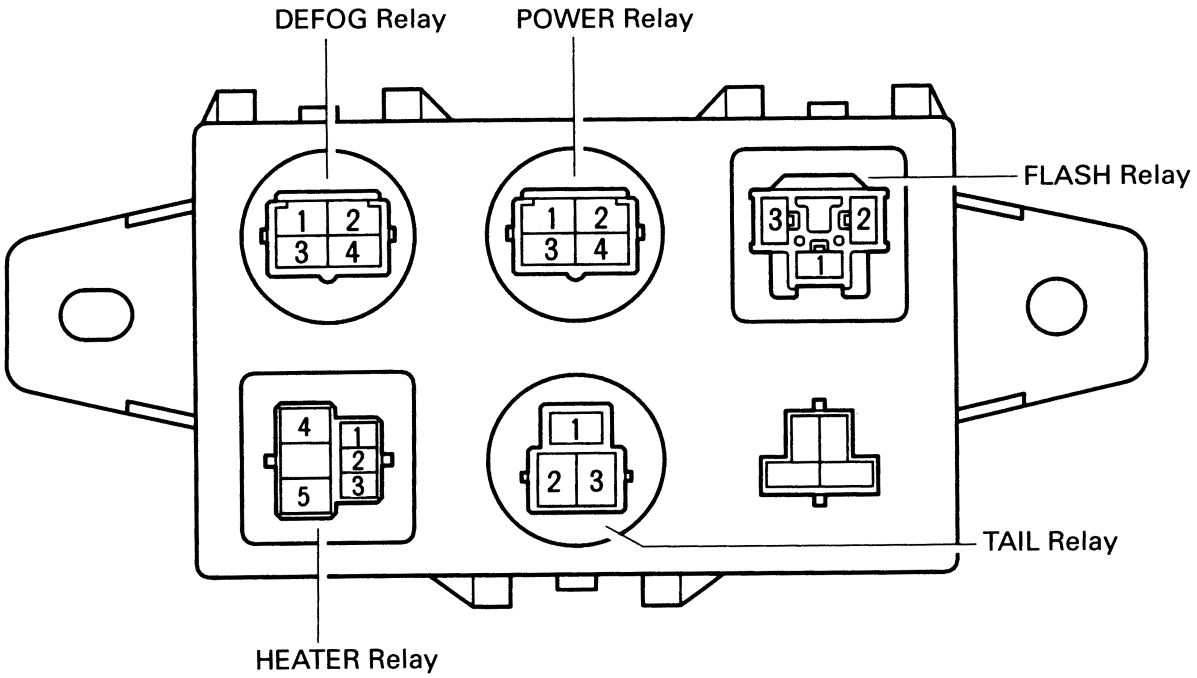

Fuse Block	Lower Finish Panel (See Page 19)

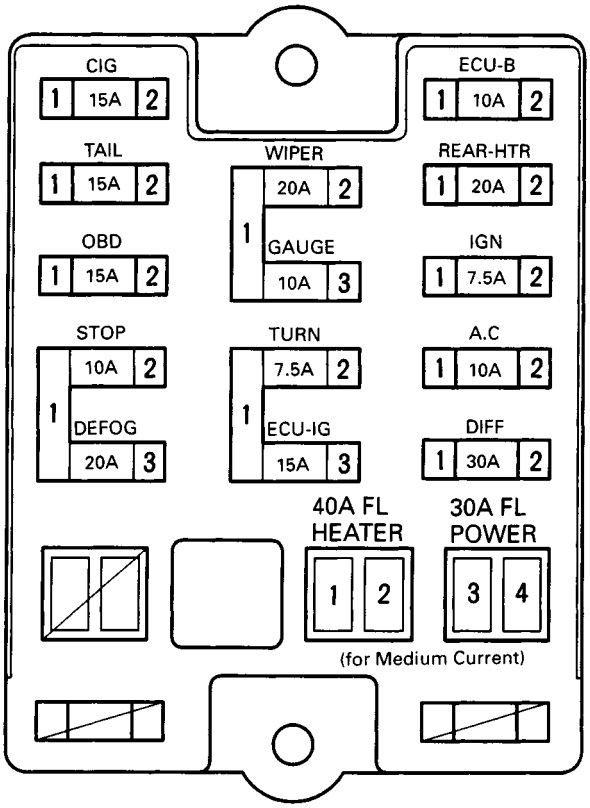

Position of Parts in Engine Compartment

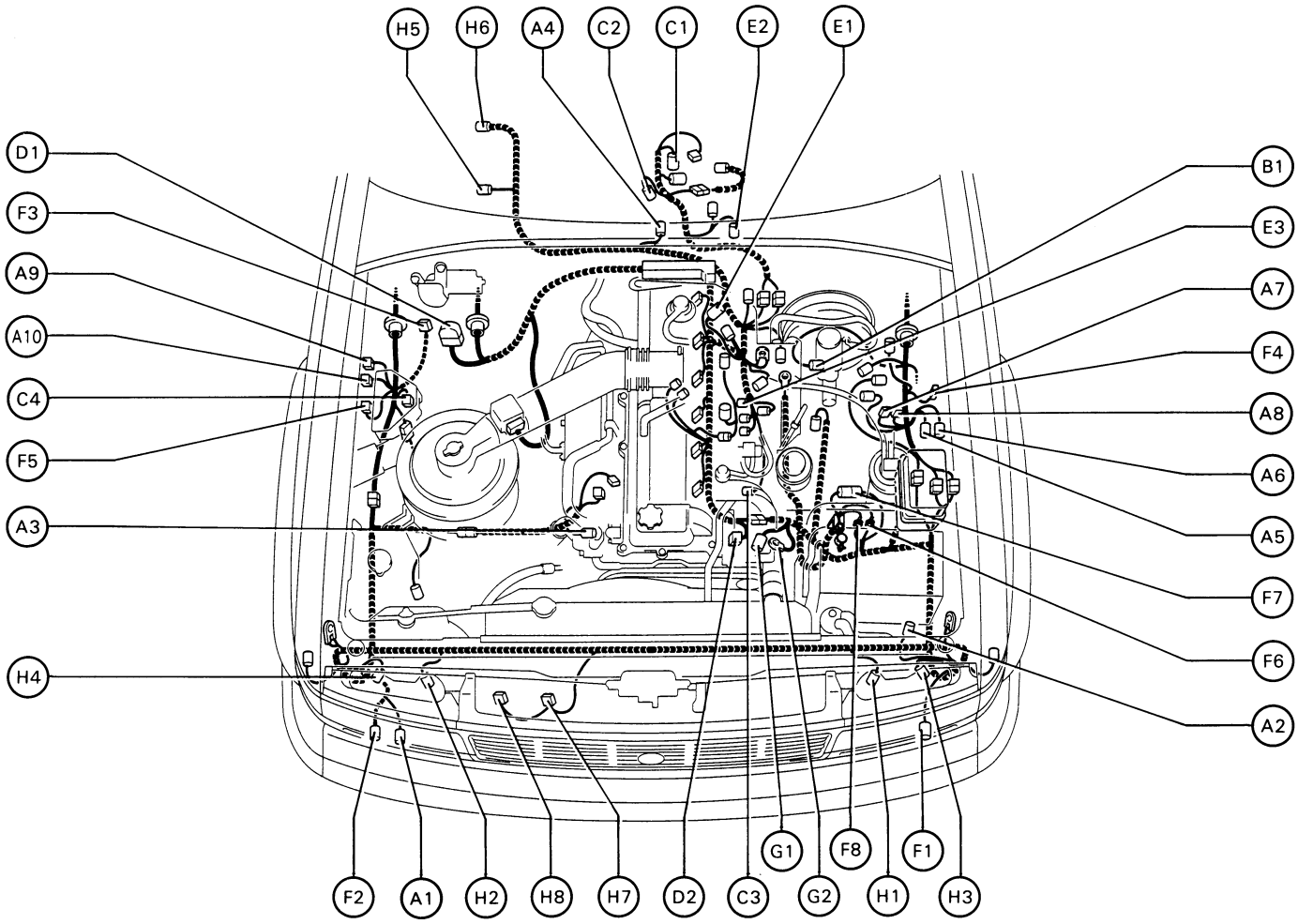

A	1	A/C Ambient Temp. Sensor
A	2	A/C Dual Pressure SW
A	3	A/C Magnetic Clutch
A	4	A/T Fluid Temp. Sensor
A	5	ABS Actuator
A	6	ABS Actuator
A	7	ABS Relay
A	8	ABS Relay
A	9	Auto Antenna Relay
A	10	Auto Antenna Motor
B	1	Brake Fluid Level Warning SW
C	1	Center Diff. Lock Control Motor
C	2	Center Diff. Lock Indicator SW
C	3	Crankshaft Position Sensor
C	4	Cruise Control Actuator
D	1	Data Link Connector 1
D	2	Distributor
E	1	EGR Gas Temp. Sensor
E	2	Electronically Controlled Transmission Solenoid
E	3	Engine Coolant Temp. Sensor
F	1	Front Turn Signal Light LH
F	2	Front Turn Signal Light RH
F	3	Front Wiper Motor
F	4	Fuel Pump Relay
F	5	Fuel Pump Resistor
F	6	Fusible Link (AM1)
F	7	Fusible Link (AM2)
F	8	Fusible Link (Main)
G	1	Generator
G	2	Generator
H	1	Headlight Hi LH
H	2	Headlight Hi RH
H	3	Headlight Lo LH
H	4	Headlight Lo RH
H	5	Heated Oxygen Sensor (Bank 1 Sensor 1)
H	6	Heated Oxygen Sensor (Bank 1 Sensor 2)
H	7	Horn LH
H	8	Horn RH

Position of Parts in Engine Compartment

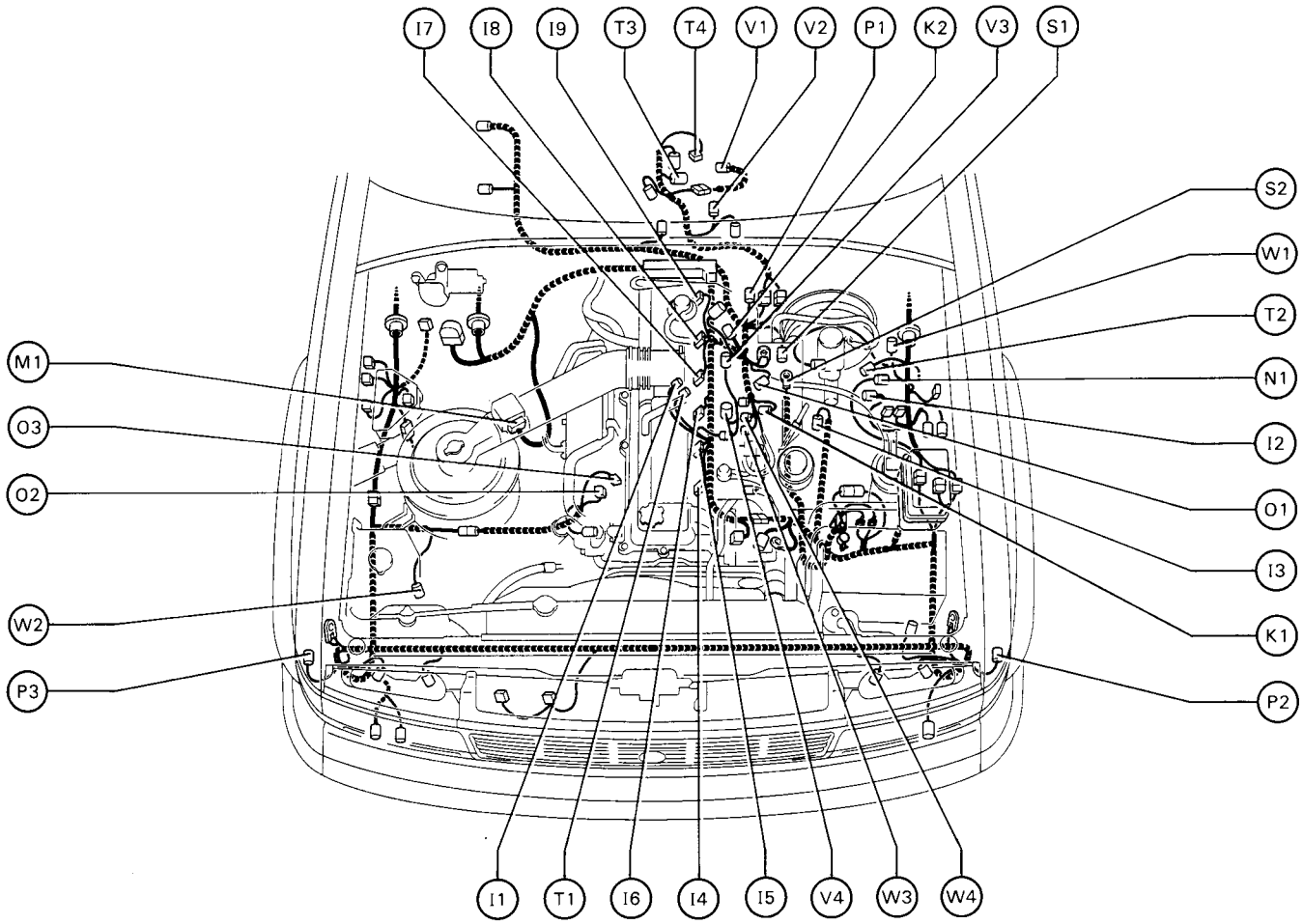

I	1	Idle Air Control Valve
I	2	Igniter
I	3	Ignition Coil
I	4	Injector No. 1
I	5	Injector No. 2
I	6	Injector No. 3
I	7	Injector No. 4
I	8	Injector No. 5
I	9	Injector No. 6
K	1	Knock Sensor 1
K	2	Knock Sensor 2
M	1	Mass Air Flow Meter
N	1	Noise Filter (Ignition System)
O	1	Oil Level Warning SW
O	2	Oil Pressure Sender
O	3	Oil Pressure Sender
P	1	Park/Neutral Position SW, Back–Up Light SW and A/T Indicator SW
P	2	Parking Light LH
P	3	Parking Light RH
S	1	Starter
S	2	Starter
T	1	Throttle Position Sensor
T	2	Theft Deterrent Buzzer (Piezo Buzzer)
T	3	Transfer L4 Position SW
T	4	Transfer Neutral Position SW
V	1	Vehicle Speed Sensor (Combination Meter)
V	2	Vehicle Speed Sensor (Electronically Controlled Transmission)
V	3	VSV (EGR)
V	4	VSV (Fuel Pressure Control)
W	1	Washer Change Valve
W	2	Washer Motor
W	3	Water Temp. Sender
W	4	Water Temp. SW

Position of Parts in Instrument Panel

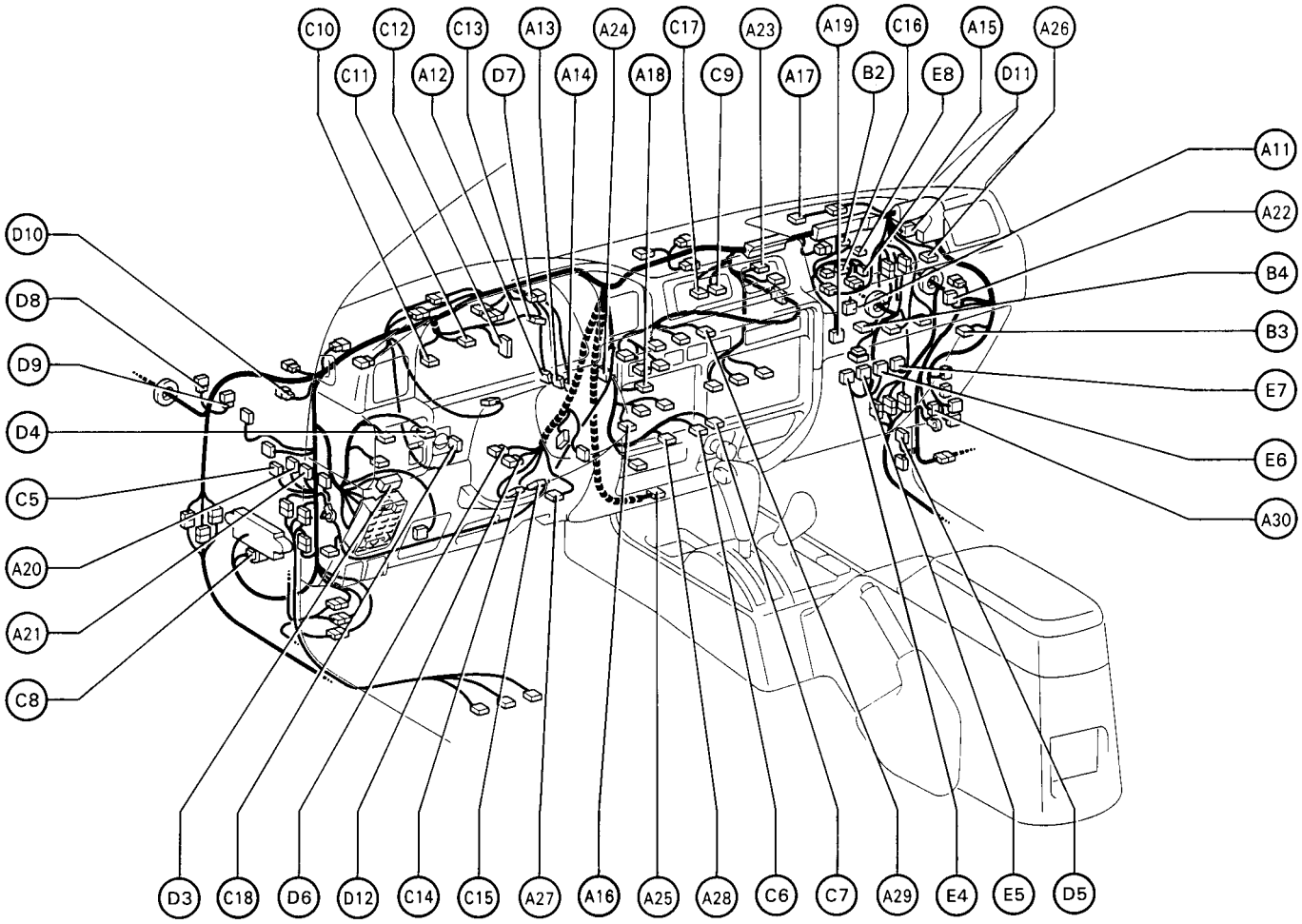

A	11	A/C Amplifier
A	12	A/C Automatic Amplifier
A	13	A/C Automatic Amplifier
A	14	A/C Automatic Amplifier
A	15	A/C Power Transistor (Blower Control)
A	16	A/C Room Temp. Sensor
A	17	A/C Solar Sensor
A	18	A/C System Amplifier
A	19	A/C Thermistor
A	20	ABS ECU
A	21	ABS ECU
A	22	Air Inlet Control Servo Motor
A	23	Air Mix Control Servo Motor
A	24	Air Vent Mode Control Servo Motor
A	25	Airbag Sensor Assembly
A	26	Airbag Squib (Front Passenger Airbag Assembly)
A	27	Airbag Squib (Steering Wheel Pad)
A	28	Ashtray Illumination
A	29	Auto Antenna Control SW
A	30	Auto Antenna ECU
B	2	Blower Hi Relay
B	3	Blower Motor (A/C)
B	4	Blower Resistor
C	5	Center Diff. Lock Control Relay
C	6	Cigarette Lighter
C	7	Cigaretter Lighter Illumination
C	8	Circuit Opening Relay
C	9	Clock
C	10	Combination Meter
C	11	Combination Meter
C	12	Combination Meter
C	13	Combination Meter
C	14	Combination SW
C	15	Combination SW
C	16	Compressor Relay
C	17	Cooling Fan (Radio and Player)
C	18	Cruise Control ECU
D	3	Data Link Connector 3
D	4	Diff. Lock Control SW
D	5	Diff. Lock ECU
D	6	Diode (Front Washer)
D	7	Diode (Headlight)
D	8	Diode (Interior Light)
D	9	Diode (Interior Light)
D	10	Diode (Interior Light)
D	11	Diode (Neutral Detection)
D	12	Diode (Rear Washer)
E	4	Engine Control Module
E	5	Engine Control Module
E	6	Engine Control Module
E	7	Engine Control Module
E	8	Engine Coolant Temp. Cut Relay

Position of Parts in Instrument Panel

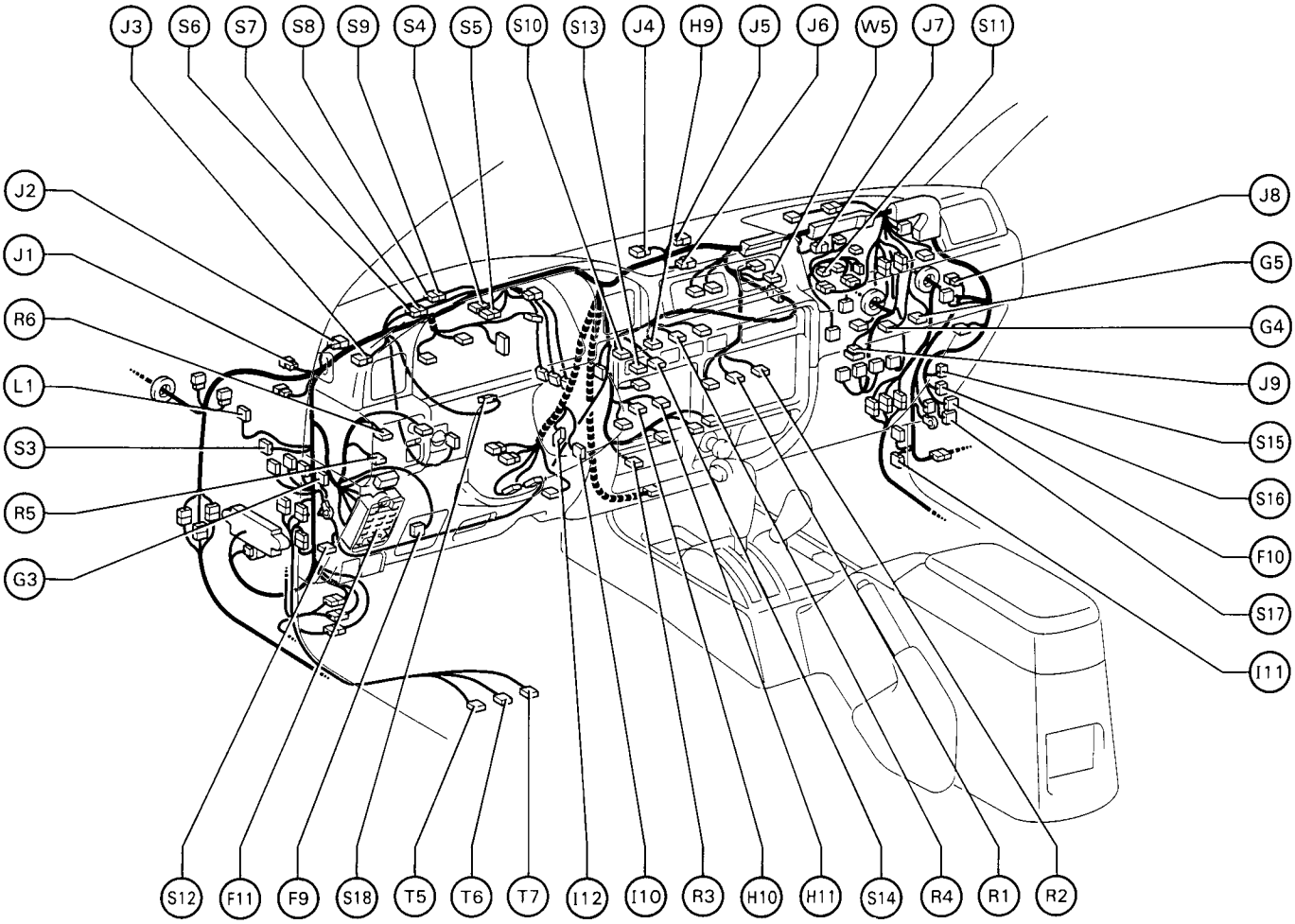

F	9	Front Speaker LH
F	10	Front Speaker RH
F	11	Fuse Block
G	3	Glass Breakage ECU
G	4	Glove Box Light
G	5	Glove Box Light SW
H	9	Hazard SW
H	10	Heater Control SW and A/C SW
H	11	Heater Control SW and A/C SW
I	10	Ignition Key Cylinder Light
I	11	Ignition Key Cylinder Light Relay
I	12	Ignition SW, Unlock Warning SW and Key Interlock Solenoid
J	1	Junction Connector
J	2	Junction Connector
J	3	Junction Connector
J	4	Junction Connector
J	5	Junction Connector
J	6	Junction Connector
J	7	Junction Connector
J	8	Junction Connector
J	9	Junction Connector
L	1	Light Retainer Relay
R	1	Radio and Player
R	2	Radio and Player
R	3	Rear Heater SW
R	4	Rear Window Defogger SW
R	5	Remote Control Mirror SW
R	6	Rheostat
S	3	Seat Belt Warning Relay
S	4	Short Connector (A/C)
S	5	Short Connector (A/C)
S	6	Short Connector (SRS)
S	7	Short Connector (SRS)
S	8	Short Connector (SRS)
S	9	Short Connector (SRS)
S	10	Short Pin (Center Diff. Lock)
S	11	Starter Cut Relay (A/C)
S	12	Starter Cut Relay (Theft Deterrent)
S	13	Status Monitor
S	14	Status Monitor
S	15	Stereo Component Amplifier
S	16	Stereo Component Amplifier
S	17	Stereo Component Amplifier
S	18	Stop Light SW
T	5	Theft Deterrent ECU
T	6	Theft Deterrent ECU
T	7	Theft Deterrent ECU
W	5	Water Temp. Sensor

Position of Parts in Body

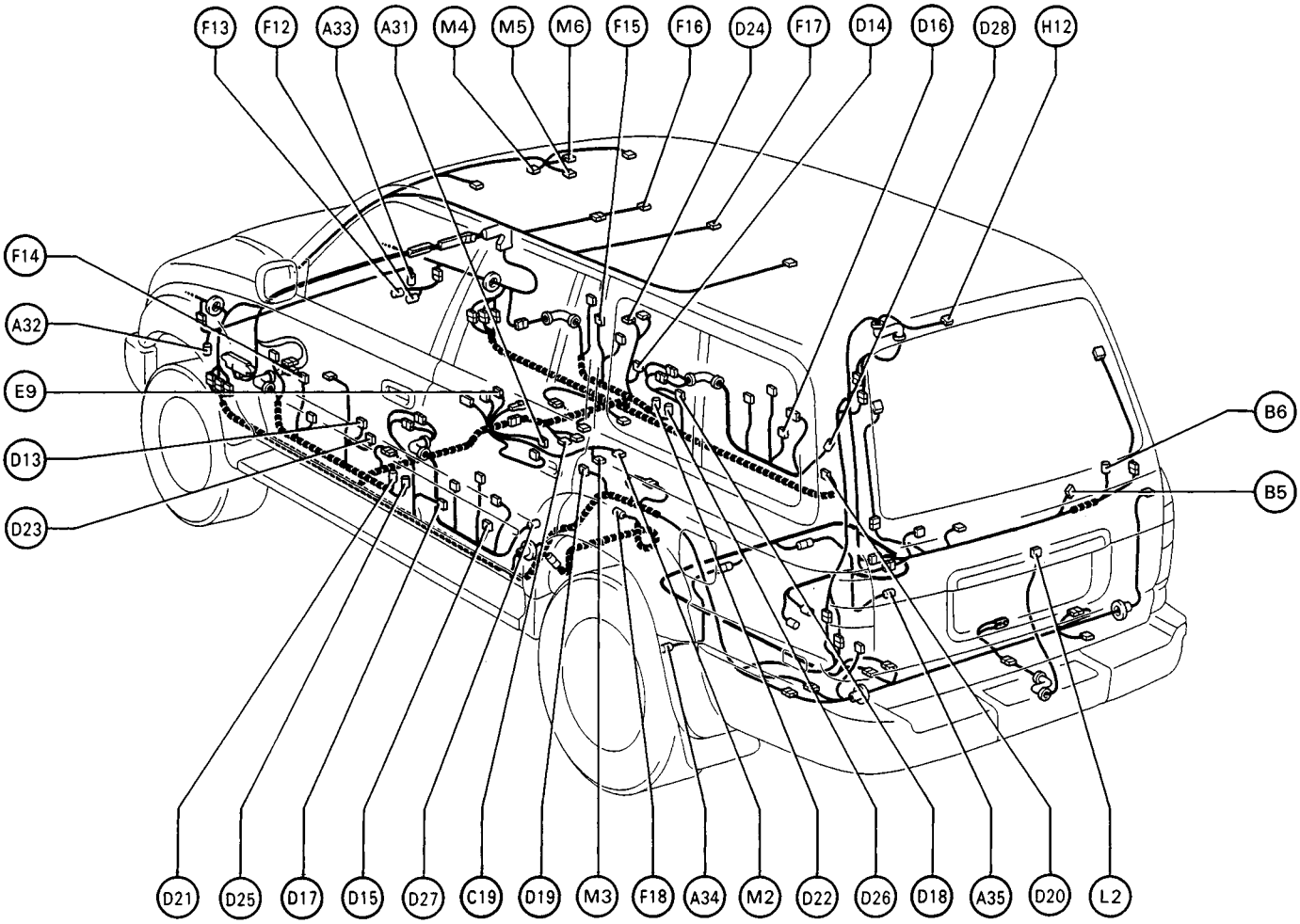

A 31 ABS Deceleration Sensor
A 32 ABS Speed Sensor Front LH
A 33 ABS Speed Sensor Front RH
A 34 ABS Speed Sensor Rear LH
A 35 ABS Speed Sensor Rear RH

B 5 Back Door Courtesy SW
B 6 Back Door Lock Motor

C 19 CD Automatic Changer

D 13 Door Courtesy Light Front LH
D 14 Door Courtesy Light Front RH
D 15 Door Courtesy Light Rear LH
D 16 Door Courtesy Light Rear RH
D 17 Door Courtesy SW Front LH
D 18 Door Courtesy SW Front RH
D 19 Door Courtesy SW Rear LH
D 20 Door Courtesy SW Rear RH
D 21 Door Key Lock and Unlock SW LH
D 22 Door Key Lock and Unlock SW RH
D 23 Door Lock Control Relay
D 24 Door Lock Control SW RH
D 25 Door Lock Motor and Door Unlock Detection SW Front LH
D 26 Door Lock Motor and Door Unlock Detection SW Front RH
D 27 Door Lock Motor Rear LH
D 28 Door Lock Motor Rear RH

E 9 Electronically Controlled Transmission Pattern Select SW

F 12 Front Diff. Lock Control Motor
F 13 Front Diff. Lock Position SW
F 14 Front Door Speaker LH
F 15 Front Door Speaker RH
F 16 Front Interior Light (w/ Moon Roof)
F 17 Front Interior Light (w/o Moon Roof)
F 18 Fuel Sender and Pump

H 12 High Mounted Stop Light

L 2 License Plate Light

M 2 Mobilephone
M 3 Mobilephone
M 4 Moon Roof Control Relay
M 5 Moon Roof Control SW and Personal Light
M 6 Moon Roof Limit SW and Motor

Position of Parts in Body

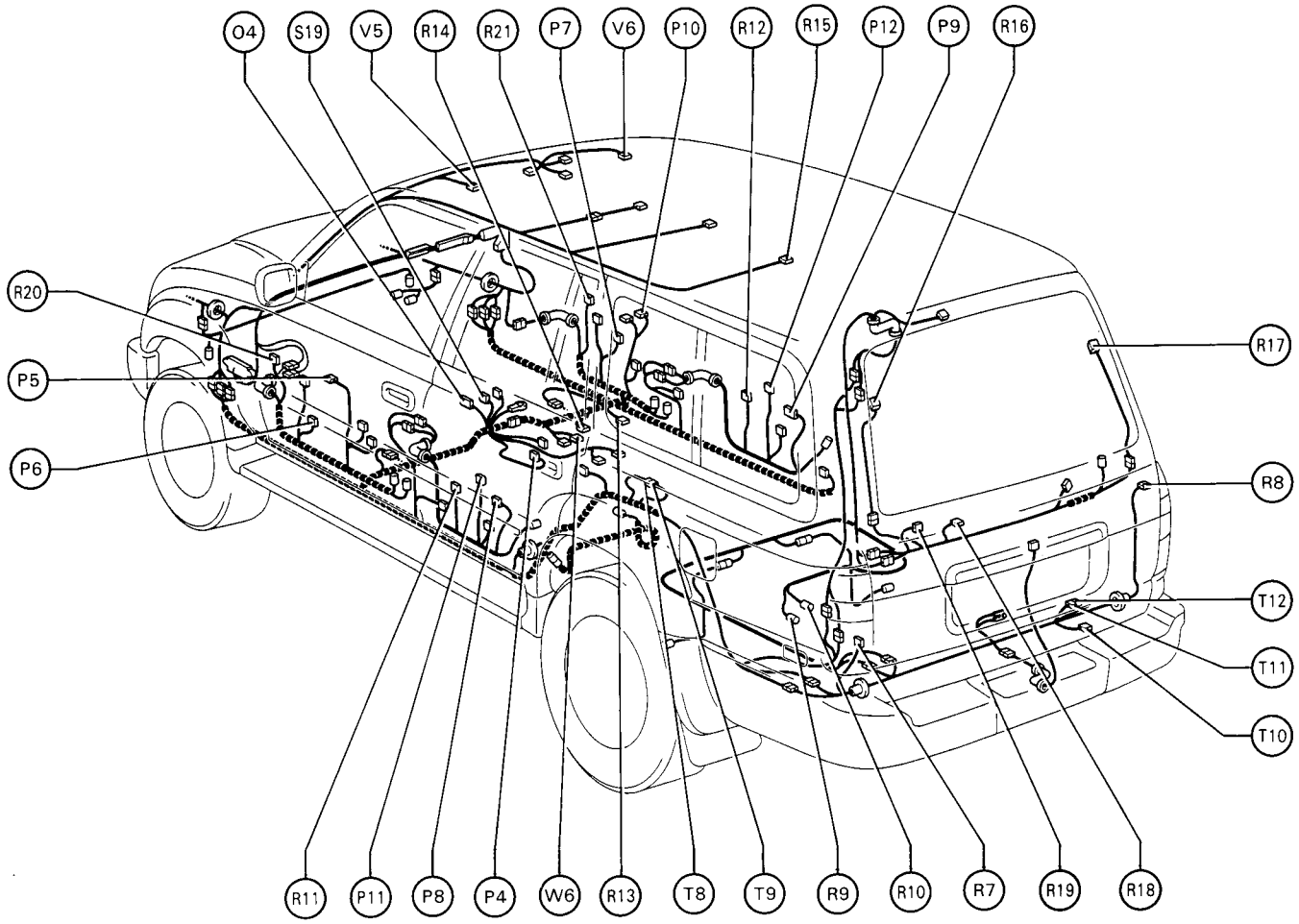

O	4	O/D Main SW
P	4	Parking Brake SW
P	5	Power Window Master SW
P	6	Power Window Motor Front LH
P	7	Power Window Motor Front RH
P	8	Power Window Motor Rear LH
P	9	Power Window Motor Rear RH
P	10	Power Window SW Front RH
P	11	Power WIndow SW Rear LH
P	12	Power Window SW Rear RH
R	7	Rear Combination Light LH
R	8	Rear Combination Light RH
R	9	Rear Diff. Lock Control Motor
R	10	Rear Diff. Lock Position SW
R	11	Rear Door Speaker LH
R	12	Rear Door Speaker RH
R	13	Rear Heater
R	14	Rear Heater Relay
R	15	Rear Interior Light
R	16	Rear Window Defogger (+)
R	17	Rear Window Defogger (–)
R	18	Rear Wiper Motor
R	19	Rear Wiper Relay
R	20	Remote Control Mirror LH
R	21	Remote Control Mirror RH
S	19	Shift Lock ECU
T	8	Telephone Transceiver and Speaker Relay
T	9	Telephone Transceiver and Speaker Relay
T	10	Trailer Socket (Tail and Stop Light)
T	11	Trailer Socket (Turn Signal Light)
T	12	Trailer Socket (Turn Signal Light)
V	5	Vanity Light LH
V	6	Vanity Light RH
W	6	Woofer Speaker

Position of Parts in Seat

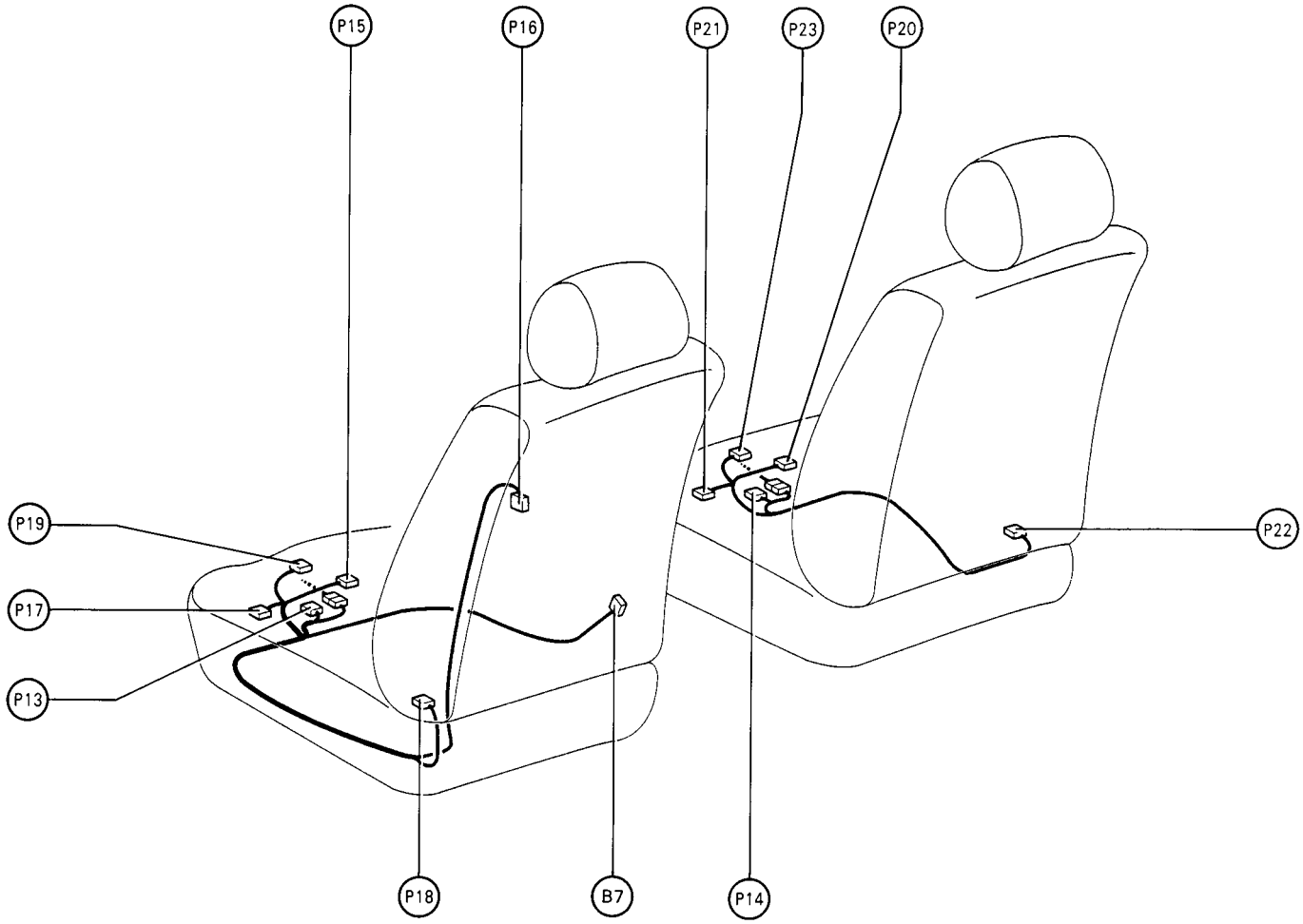

B 7 Buckle SW LH

P 13 Power Seat Control SW (Driver's Seat)
P 14 Power Seat Control SW (Front Passenger's Seat)
P 15 Power Seat Motor (Driver's Seat Front Vertical Control)
P 16 Power Seat Motor (Driver's Seat Lumbar Support Control)
P 17 Power Seat Motor (Driver's Seat Rear Vertical Control)
P 18 Power Seat Motor (Driver's Seat Reclining Control)
P 19 Power Seat Motor (Driver's Seat Slide Control)
P 20 Power Seat Motor (Front Passenger's Seat Front Vertical Control)
P 21 Power Seat Motor (Front Passenger's Seat Rear Vertical Control)
P 22 Power Seat Motor (Front Passenger's Seat Reclining Control)
P 23 Power Seat Motor (Front Passenger's Seat Slide Control)

▭ : Location of Connector Joining Wire Harness and Wire Harness

▽ : Location of Ground Points

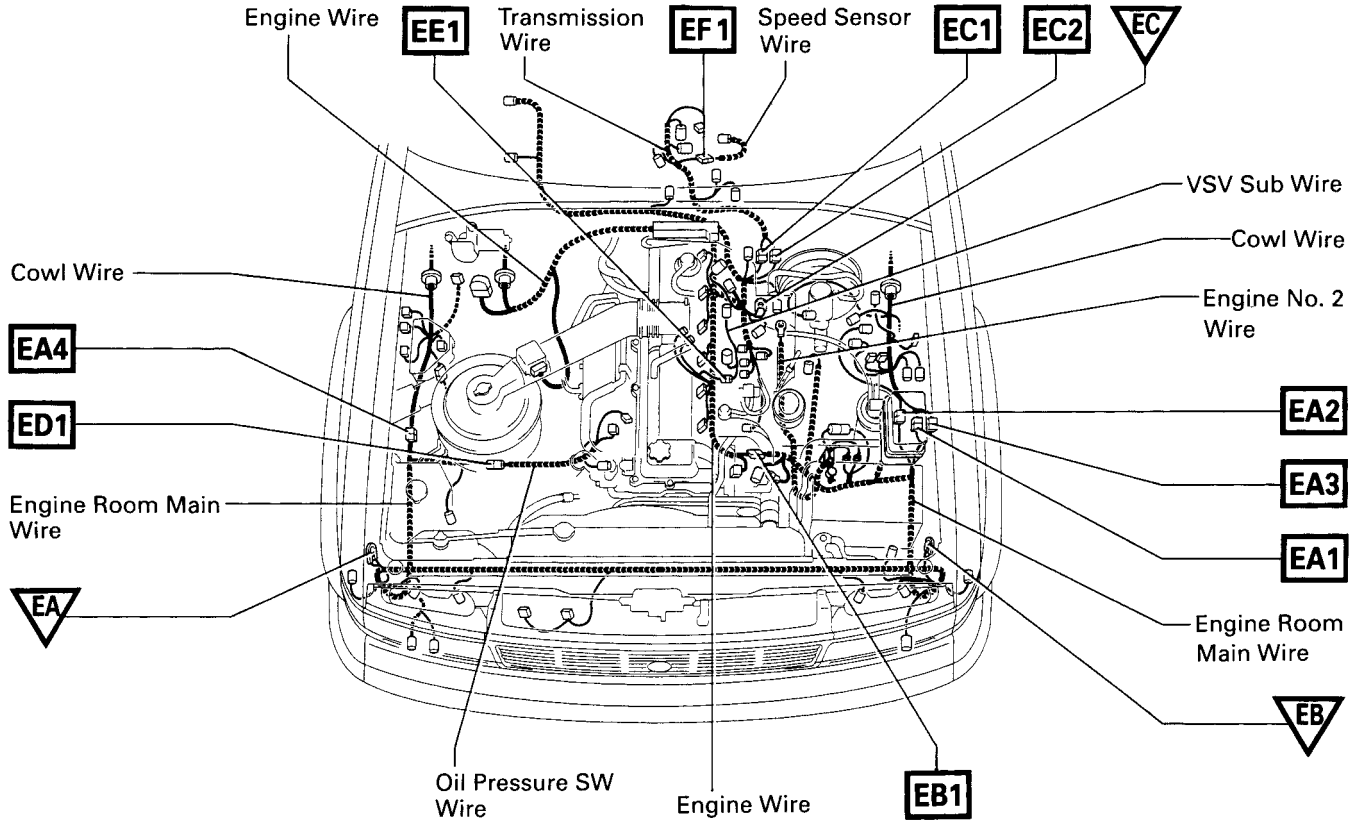

○ : Location of Splice Points

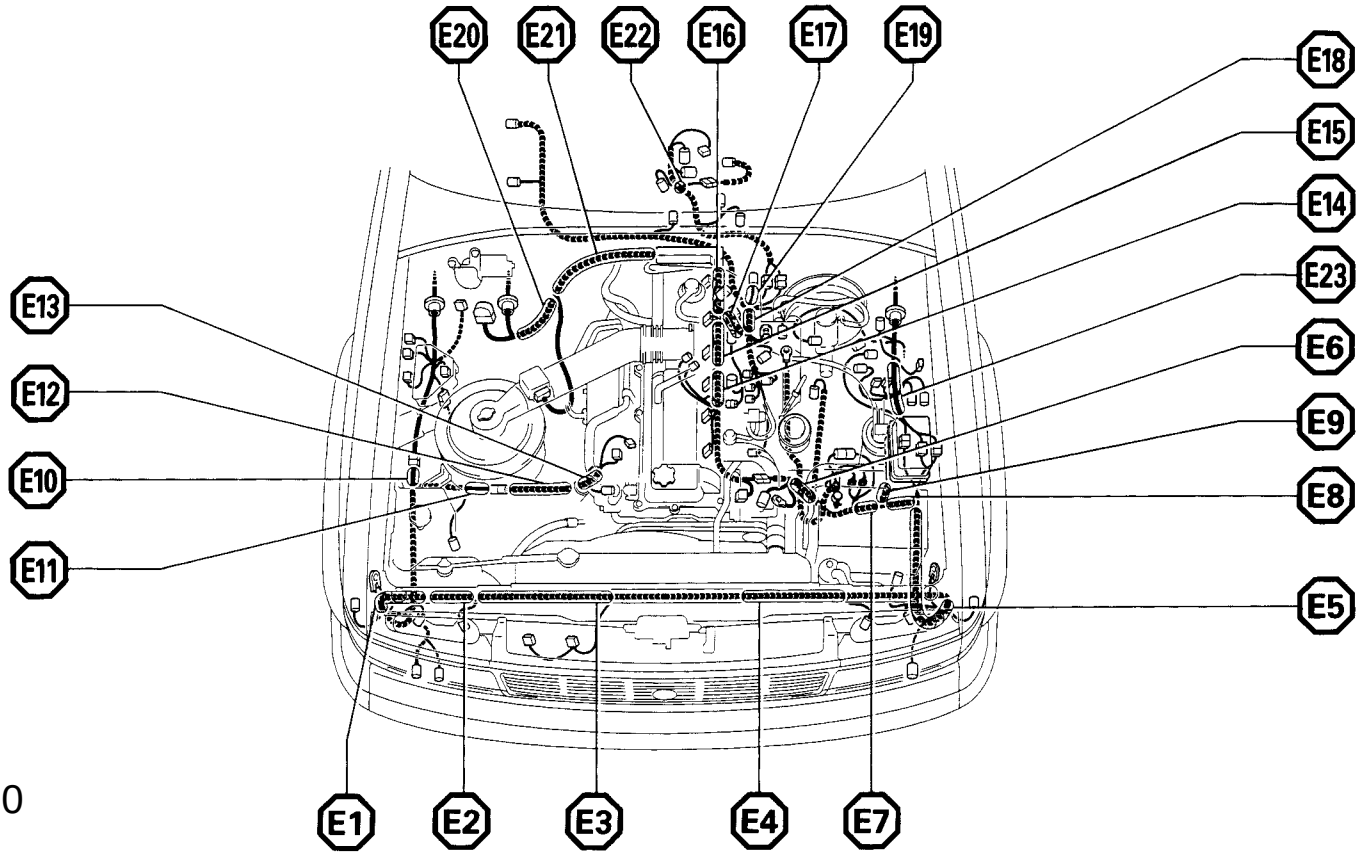

Connector Joining Wire Harness and Wire Harness

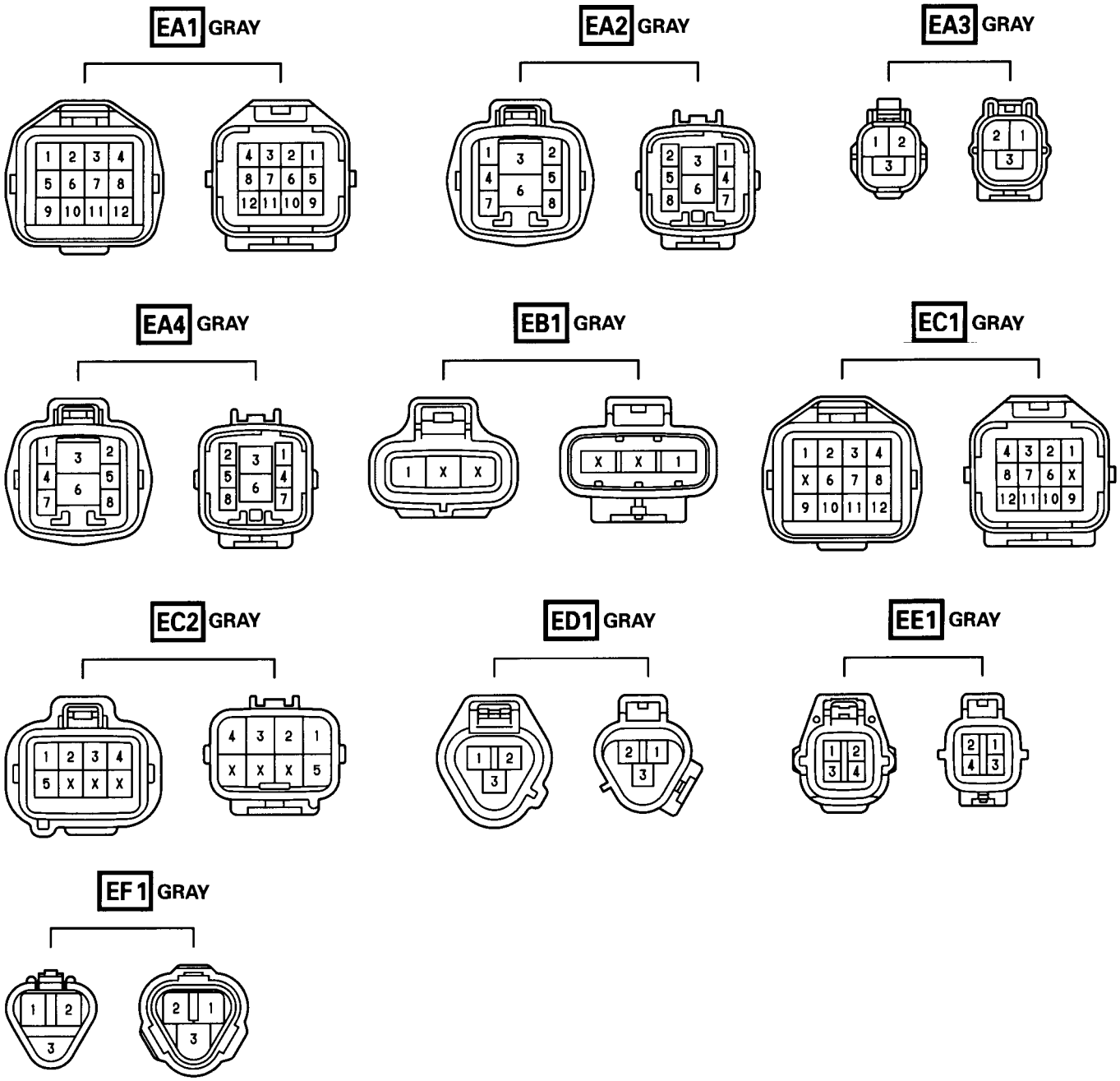

CODE	JOINING WIRE HARNESS AND WIRE HARNESS (CONNECTOR LOCATION)
EA1	COWL WIRE AND ENGINE ROOM MAIN WIRE (LEFT FENDER)
EA2	
EA3	
EA4	COWL WIRE AND ENGINE ROOM MAIN WIRE (RIGHT FENDER)
EB1	ENGINE ROOM MAIN WIRE AND ENGINE WIRE (NEAR THE DISTRIBUTOR)
EC1	ENGINE WIRE AND TRANSMISSION WIRE (NEAR THE STARTER)
EC2	
ED1	OIL PRESSURE SWITCH WIRE AND ENGINE ROOM MAIN WIRE (NEAR THE AIR CLEANER)
EE1	ENGINE WIRE AND VSV SUB WIRE (NEAR THE THROTTLE POSITION SENSOR)
EF1	TRANSMISSION WIRE AND SPEED SENSOR WIRE (NEAR THE TRANSMISSION)

▭ : Location of Connector Joining Wire Harness and Wire Harness

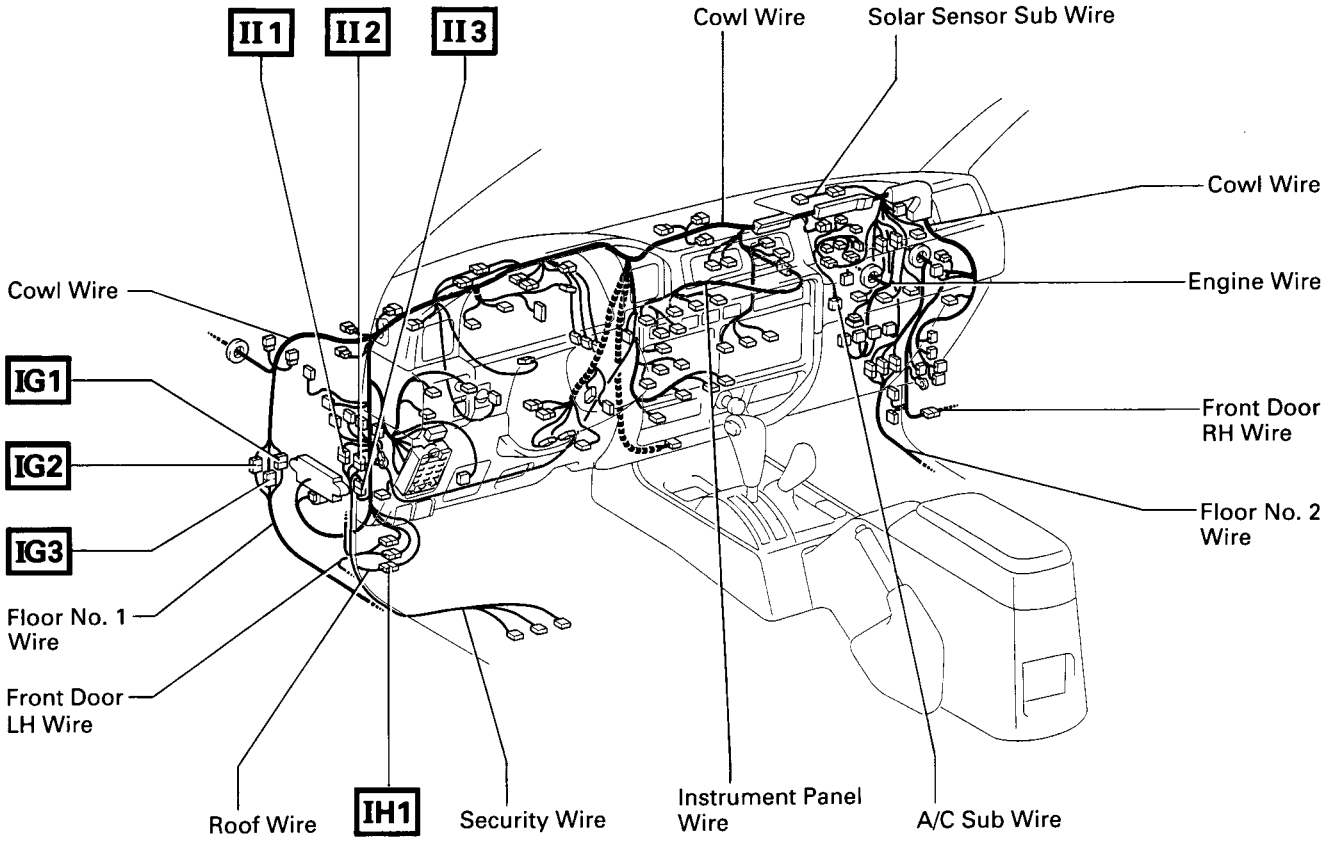

▽ : Location of Ground Points

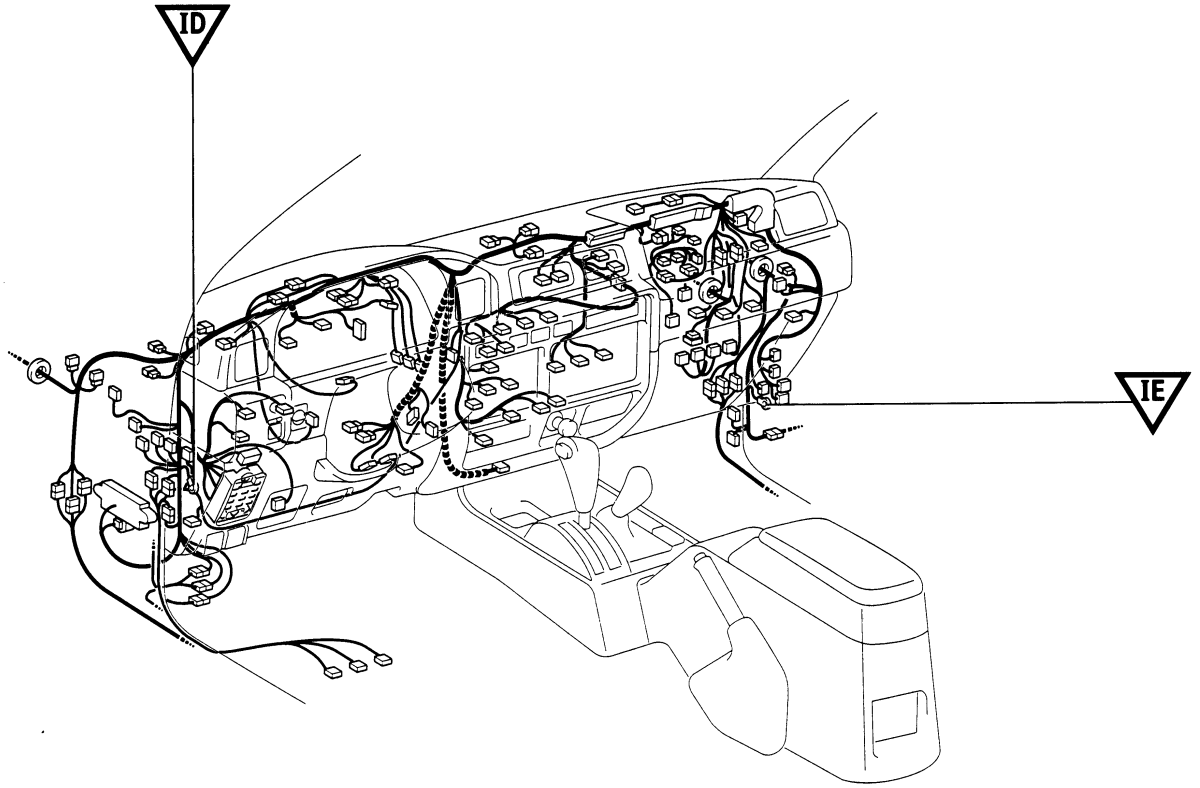

Connector Joining Wire Harness and Wire Harness

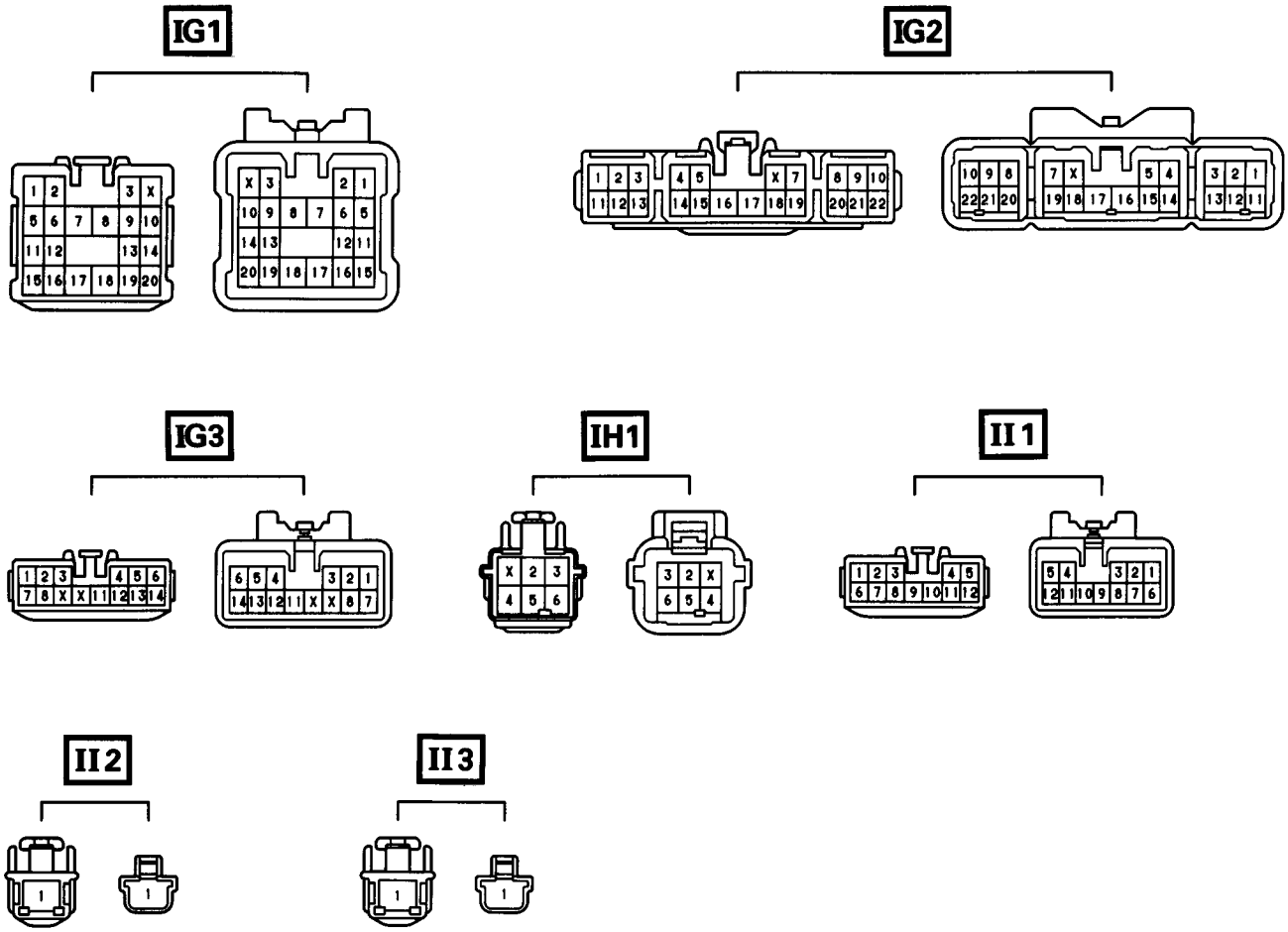

CODE	JOINING WIRE HARNESS AND WIRE HARNESS (CONNECTOR LOCATION)
IG1	COWL WIRE AND FLOOR WIRE (LEFT KICK PANEL)
IG2	
IG3	
IH1	ROOF WIRE AND COWL WIRE (LEFT KICK PANEL)
II1	COWL WIRE AND SECURITY WIRE (LEFT KICK PANEL)
II2	SECURITY WIRE AND COWL WIRE (LEFT KICK PANEL)
II3	COWL WIRE AND SECURITY WIRE (LEFT KICK PANEL)

▭ : Location of Connector Joining Wire Harness and Wire Harness

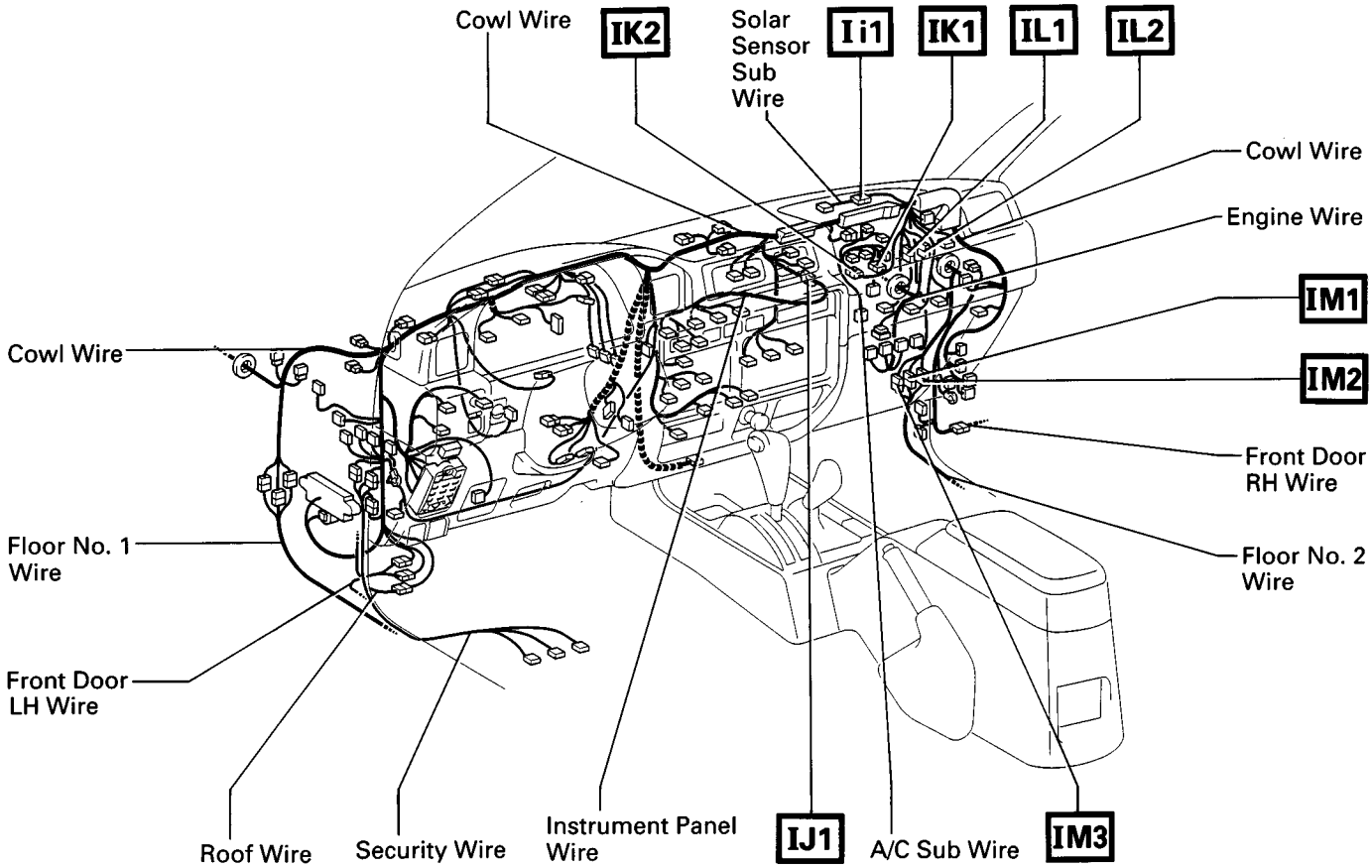

⬡ : Location of Splice Points

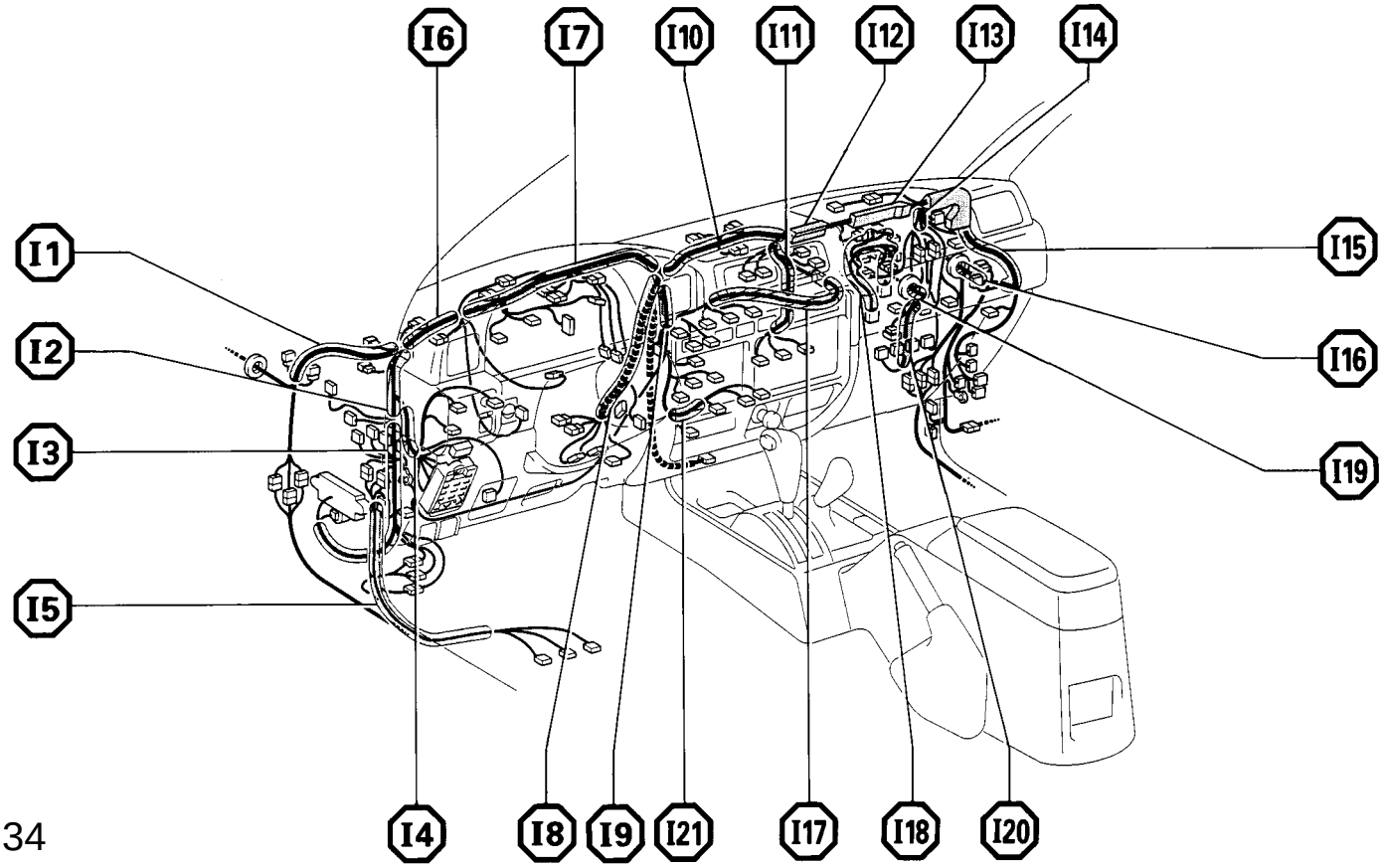

Connector Joining Wire Harness and Wire Harness

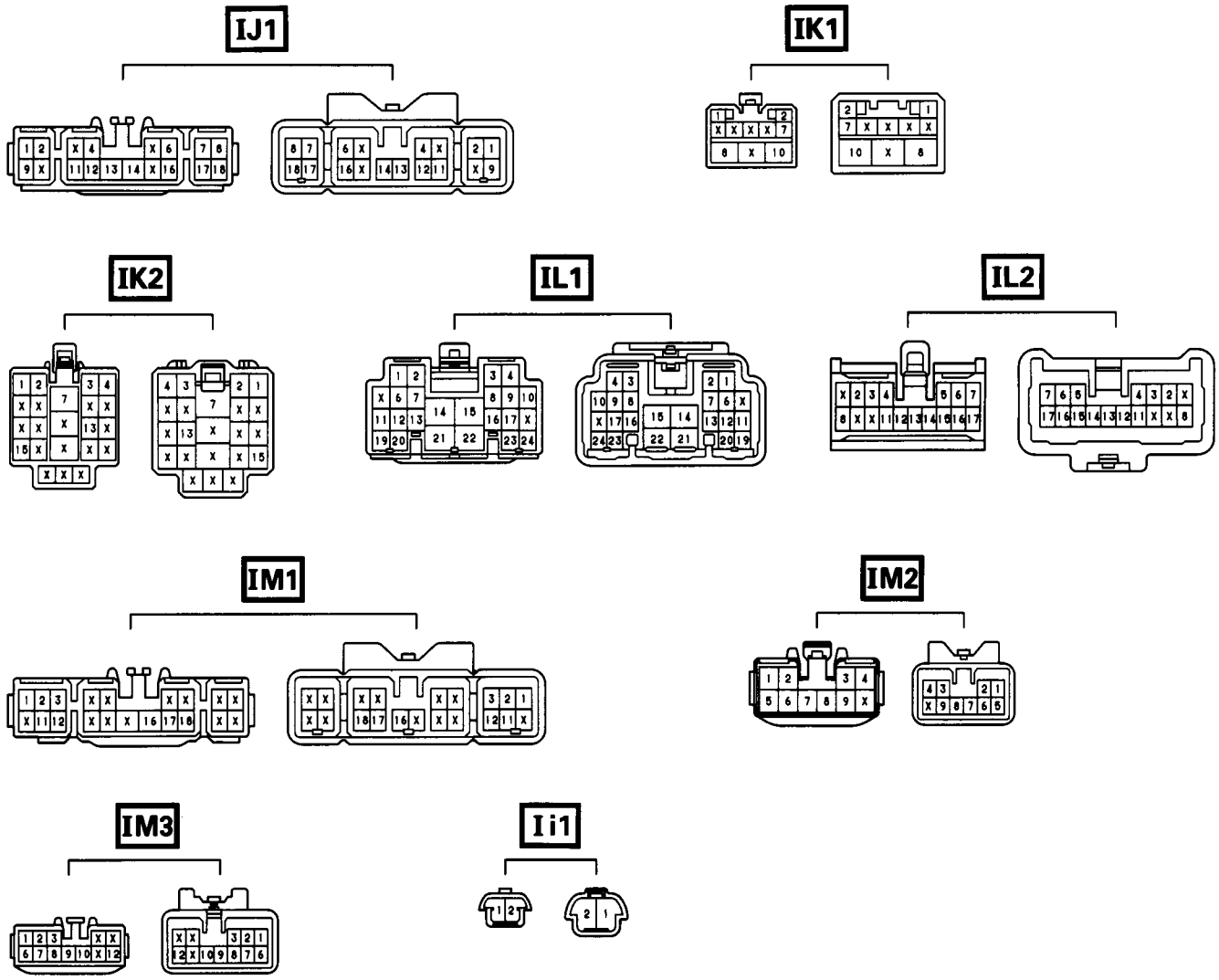

CODE	JOINING WIRE HARNESS AND WIRE HARNESS (CONNECTOR LOCATION)
IJ1	COWL WIRE AND INSTRUMENT PANEL WIRE (INSTRUMENT PANEL CENTER)
IK1	COWL WIRE AND A/C SUB WIRE (BEHIND GLOVE BOX)
IK2	
IL1	ENGINE WIRE AND COWL WIRE (BEHIND GLOVE BOX)
IL2	
IM1	COWL WIRE AND FLOOR NO. 2 WIRE (RIGHT KICK PANEL)
IM2	
IM3	
Ii1	SOLAR SENSOR SUB WIRE AND COWL WIRE (BEHIND GLOVE BOX)

▭ : Location of Connector Joining Wire Harness and Wire Harness

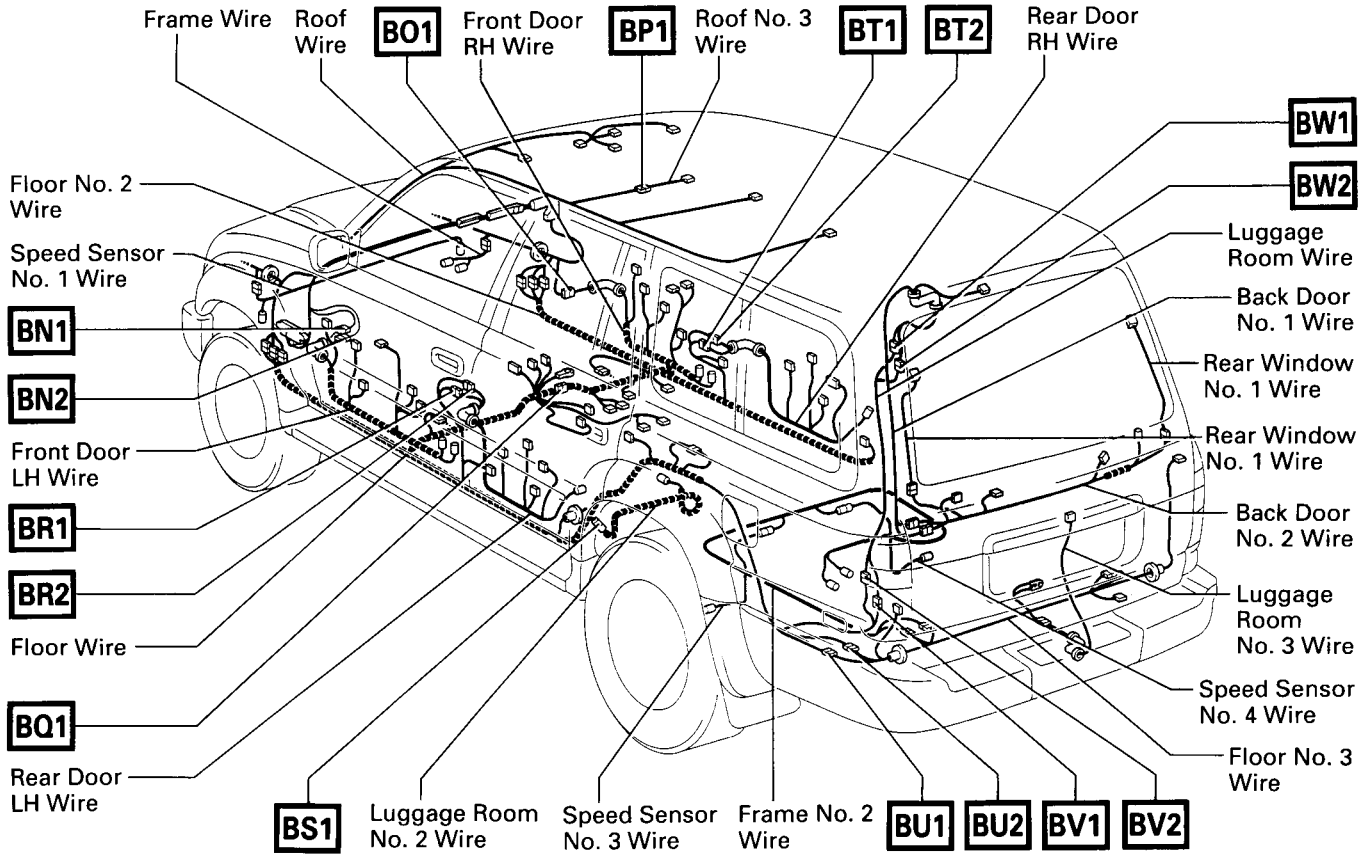

▽ : Location of Ground Points

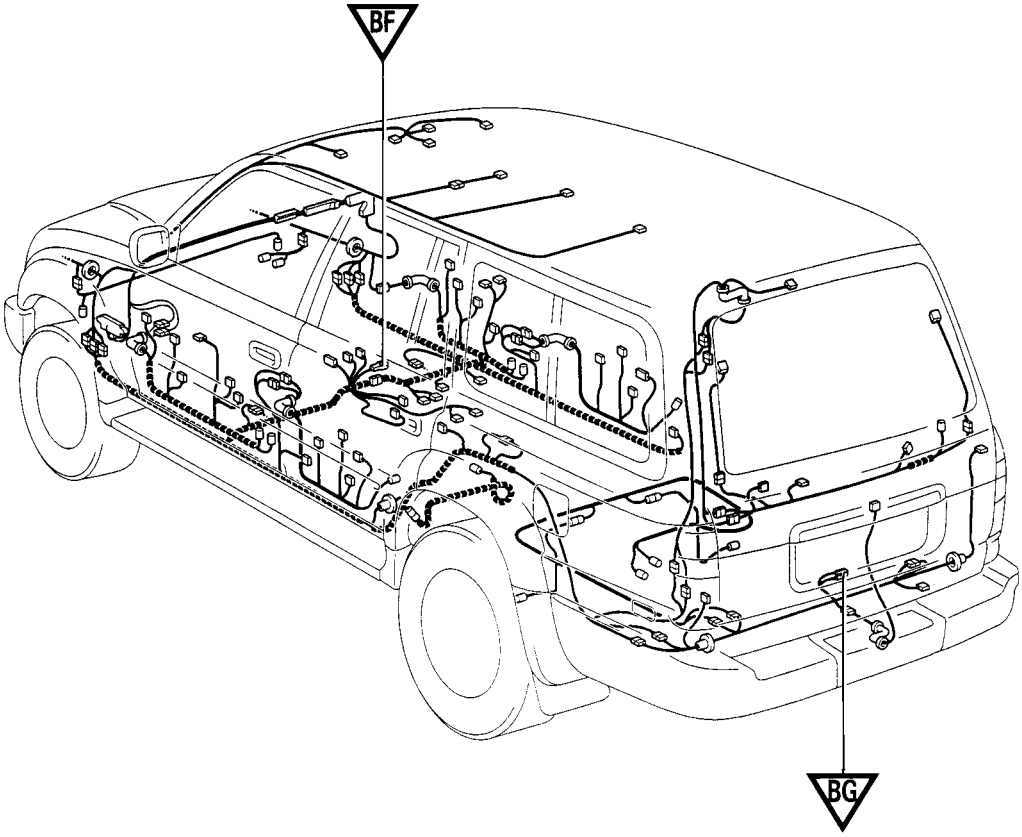

Connector Joining Wire Harness and Wire Harness

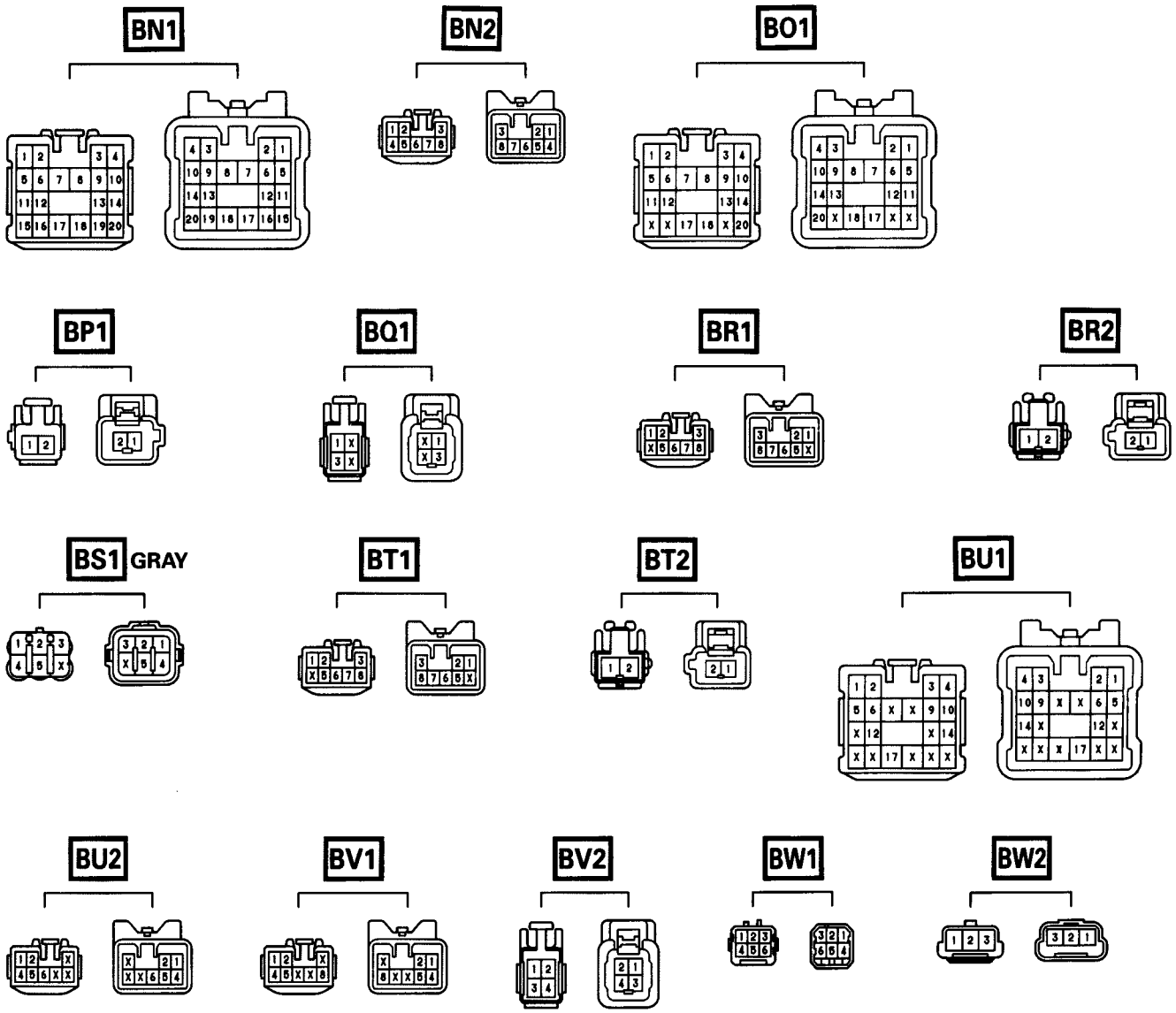

CODE	JOINING WIRE HARNESS AND WIRE HARNESS (CONNECTOR LOCATION)
BN1	FRONT DOOR LH WIRE AND COWL WIRE (LEFT KICK PANEL)
BN2	
BO1	FRONT DOOR RH WIRE AND COWL WIRE (RIGHT KICK PANEL)
BP1	ROOF WIRE AND ROOF NO. 3 WIRE (ROOF LEFT)
BQ1	FLOOR NO. 2 WIRE AND FLOOR WIRE (UNDER THE CENTER CONSOLE)
BR1	REAR DOOR LH WIRE AND FLOOR WIRE (LEFT CENTER PILLAR)
BR2	
BS1	FLOOR WIRE AND LUGGAGE ROOM NO. 2 WIRE (BEHIND THE FUEL TANK)
BT1	REAR DOOR RH WIRE AND FLOOR NO. 2 WIRE (RIGHT CENTER PILLAR)
BT2	
BU1	FLOOR NO. 3 WIRE AND FLOOR WIRE (LEFT QUARTER PANEL INNER)
BU2	
BV1	LUGGAGE ROOM NO.1 WIRE AND FLOOR WIRE (LEFT QUARTER PANEL INNER)
BV2	
BW1	BACK DOOR NO.1 WIRE AND LUGGAGE ROOM NO.1 WIRE (LEFT REAR SIDE OF ROOF)
BW2	

▭ : Location of Connector Joining Wire Harness and Wire Harness

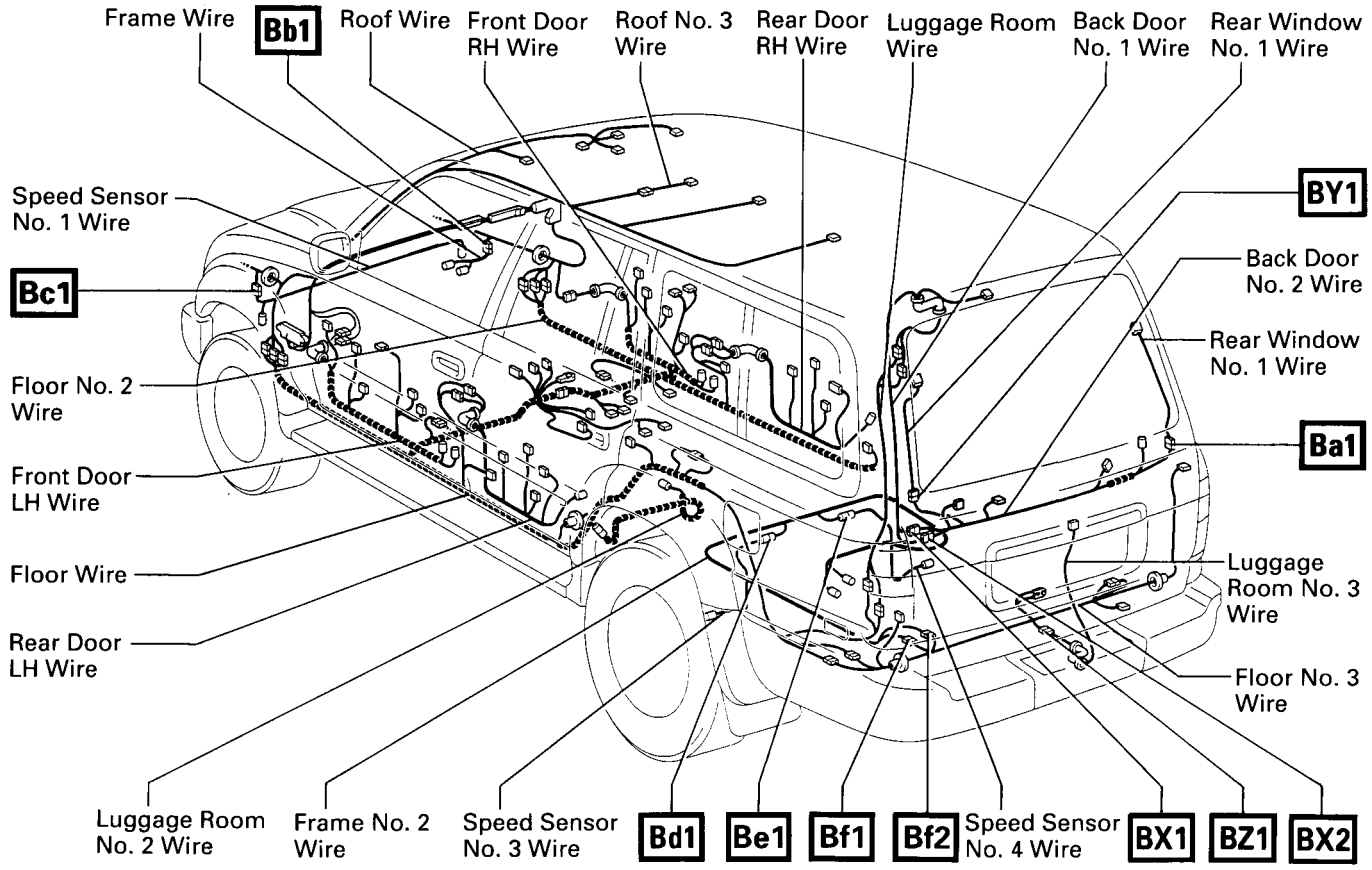

⬡ : Location of Splice Points

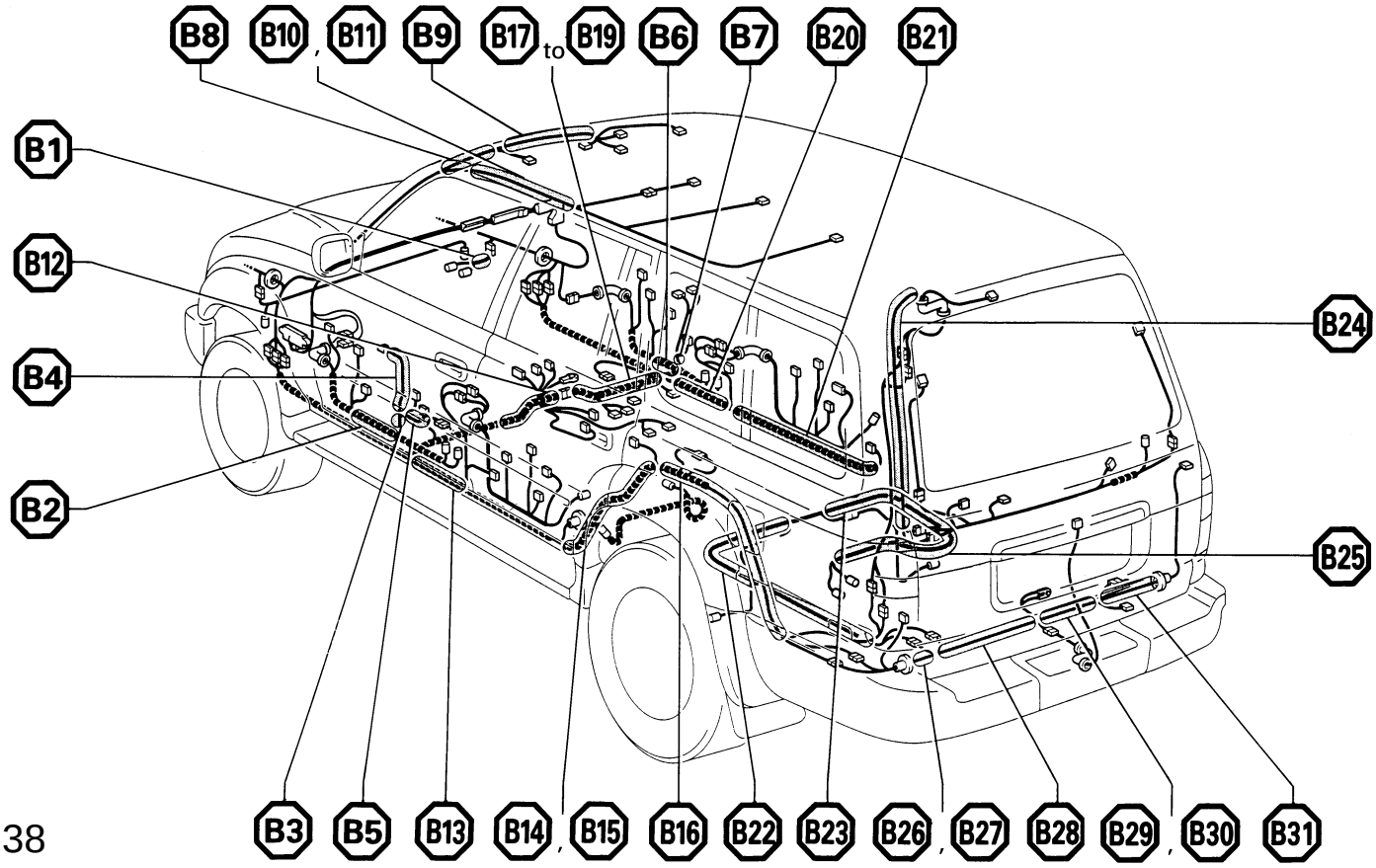

Connector Joining Wire Harness and Wire Harness

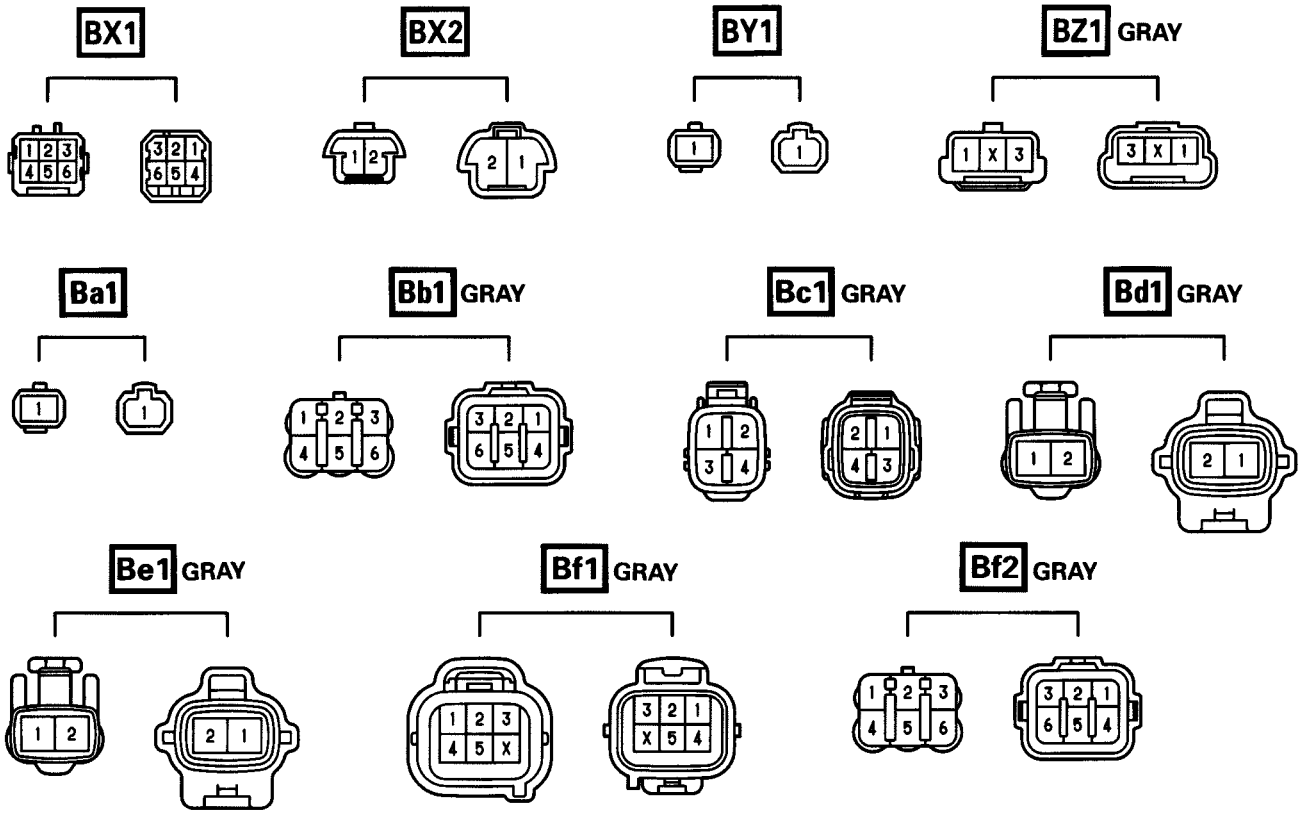

CODE	JOINING WIRE HARNESS AND WIRE HARNESS (CONNECTOR LOCATION)
BX1	BACK DOOR NO. 1 WIRE AND BACK DOOR NO. 2 WIRE (BACK DOOR LEFT)
BX2	
BY1	REAR WINDOW NO. 1 WIRE AND BACK DOOR NO. 2 WIRE (BACK DOOR LEFT)
BZ1	LUGGAGE ROOM NO. 3 WIRE AND FLOOR NO. 3 WIRE (UNDER THE LOWER BACK PANEL)
Ba1	REAR WINDOW NO. 1 WIRE AND BACK DOOR NO. 2 WIRE (BACK DOOR RIGHT)
Bb1	COWL WIRE AND FRAME WIRE (RIGHT FENDER)
Bc1	COWL WIRE AND SPEED SENSOR NO. 1 WIRE (LEFT KICK PANEL)
Bd1	FRAME NO. 2 WIRE AND SPEED SENSOR NO. 3 WIRE (REAR AXLE HOUSING LH)
Be1	FRAME NO. 2 WIRE AND SPEED SENSOR NO. 4 WIRE (REAR AXLE HOUSING RH)
Bf1	FLOOR NO. 3 WIRE AND FRAME NO. 2 WIRE (LEFT QUARTER PANEL INNER)
Bf2	

▭ : Location of Connector Joining Wire Harness and Wire Harness

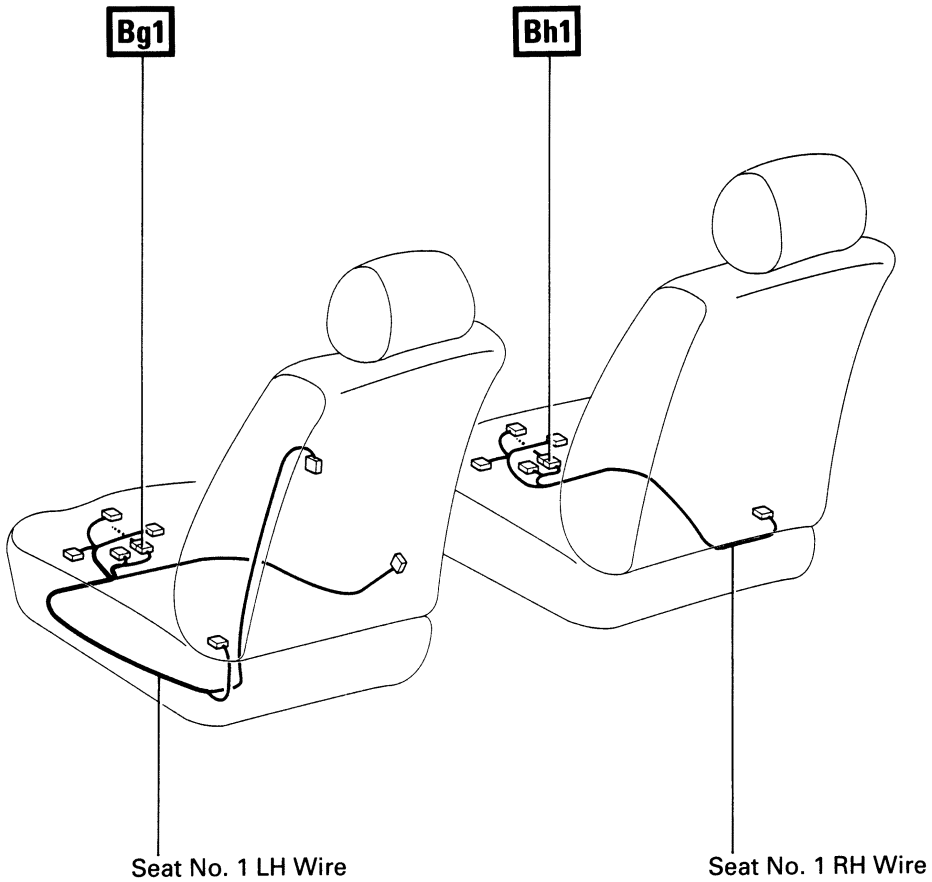

⬡ : Location of Splice Points

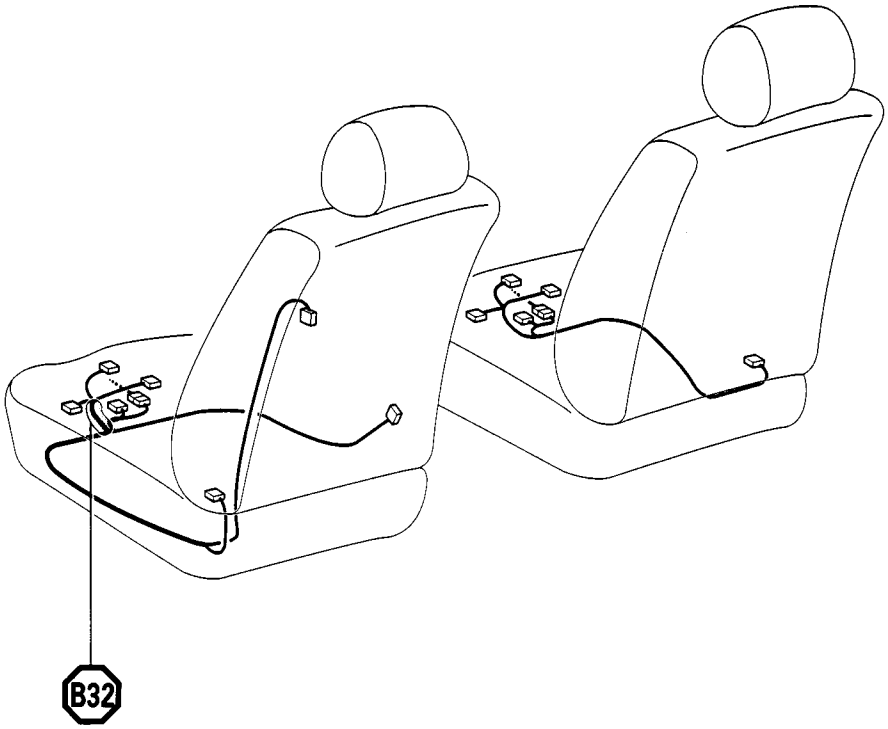

Connector Joining Wire Harness and Wire Harness

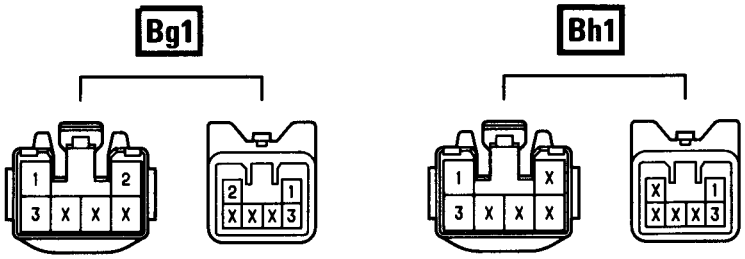

CODE	JOINING WIRE HARNESS AND WIRE HARNESS (CONNECTOR LOCATION)
Bg1	FLOOR NO. 1 WIRE AND SEAT NO. 1 LH WIRE (UNDER THE DRIVER'S SEAT)
Bh1	FLOOR NO. 2 WIRE AND SEAT NO. 1 RH WIRE (UNDER THE PASSENGER'S SEAT)

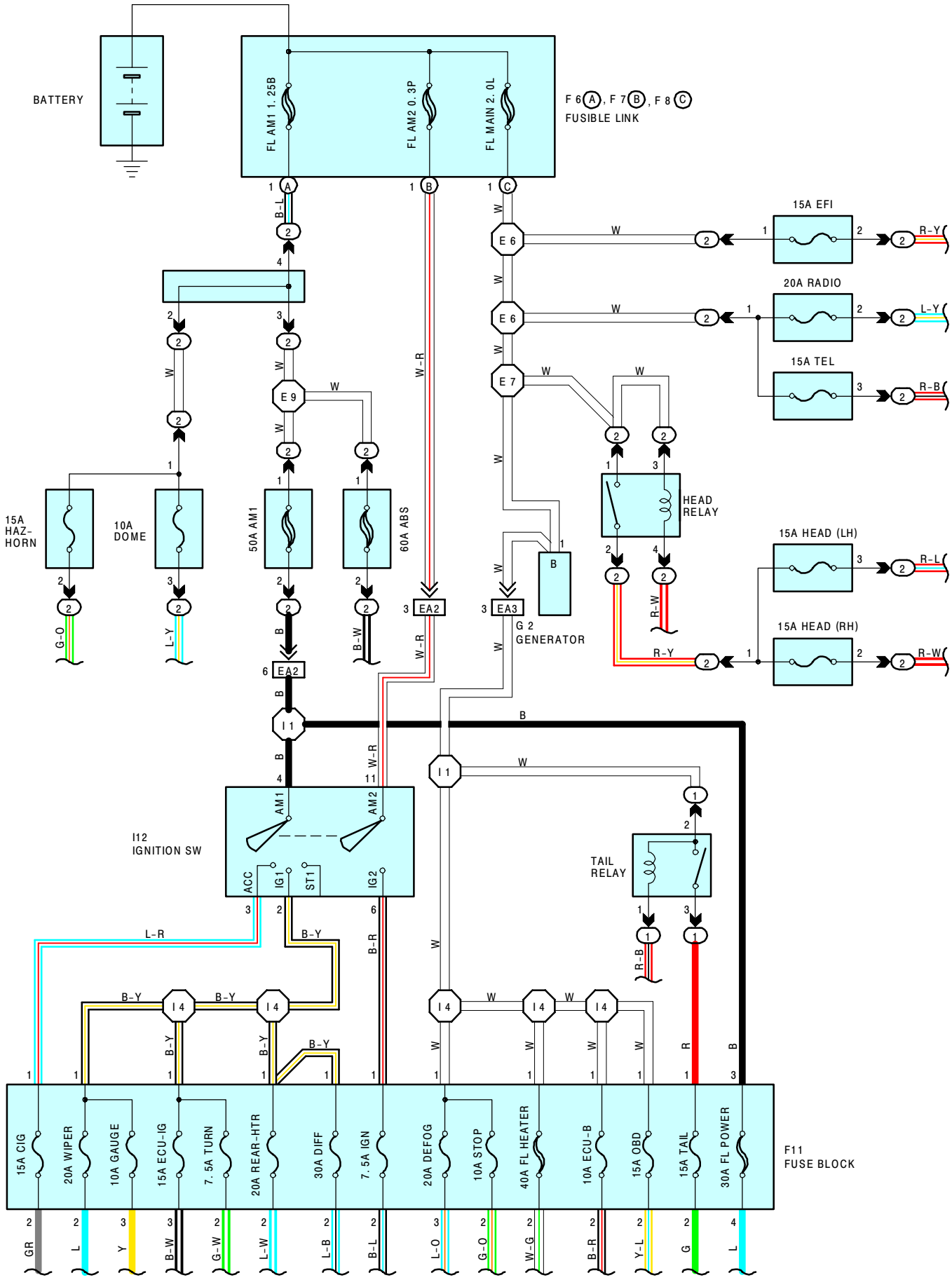
BATTERY
FL AM1 1.25B
FL AM2 0.3P
FL MAIN 2.0L
F 6 (A), F 7 (B), F 8 (C)
FUSIBLE LINK
15A EFI
20A RADIO
15A TEL
15A HAZ-HORN
10A DOME
50A AM1
60A ABS
HEAD RELAY
15A HEAD (LH)
15A HEAD (RH)
G 2 GENERATOR
I12 IGNITION SW
TAIL RELAY
F11 FUSE BLOCK
15A CIG
20A WIPER
10A GAUGE
15A ECU-IG
7.5A TURN
20A REAR-HTR
30A DIFF
7.5A IGN
20A DEFOG
10A STOP
40A FL HEATER
10A ECU-B
15A OBD
15A TAIL
30A FL POWER

SERVICE HINTS

HEAD RELAY

(2) 1 – **(2)** 2 : CLOSED WITH THE LIGHT CONTROL SW AT **HEAD** POSITION OR THE DIMMER SW AT **FLASH** POSITION (WHEN THE LIGHT AUTO TURN OFF SYSTEM DOES NOT OPERATE)

I12 IGNITION SW

4–3 : CLOSED WITH THE IGNITION SW AT **ACC** OR **ON** POSITION
4–2 : CLOSED WITH THE IGNITION SW AT **ON** OR **ST** POSITION
11–6 : CLOSED WITH THE IGNITION SW AT **ON** OR **ST** POSITION

TAIL RELAY

(1) 2 – **(1)** 3 : CLOSED WITH THE LIGHT CONTROL SW AT **TAIL** OR **HEAD** POSITION (WHEN THE LIGHT AUTO TURN OFF SYSTEM DOES NOT OPERATE)

○ : PARTS LOCATION

CODE		SEE PAGE	CODE		SEE PAGE	CODE	SEE PAGE
F 6	A	22	**F 8**	C	22	**G 2**	22
F 7	B	22	**F11**		25	**I12**	25

▭ : RELAY BLOCKS

CODE	SEE PAGE	RELAY BLOCKS (RELAY BLOCK LOCATION)
1	20	R/B NO. 1 (LEFT KICK PANEL)
2	18	R/B NO. 2 (FRONT SIDE OF LEFT FENDER)

▭ : CONNECTOR JOINING WIRE HARNESS AND WIRE HARNESS

CODE	SEE PAGE	JOINING WIRE HARNESS AND WIRE HARNESS (CONNECTOR LOCATION)
EA2	30	COWL WIRE AND ENGINE ROOM MAIN WIRE (LEFT FENDER)
EA3		

⬡ : SPLICE POINTS

CODE	SEE PAGE	WIRE HARNESS WITH SPLICE POINTS	CODE	SEE PAGE	WIRE HARNESS WITH SPLICE POINTS
E 6	30	ENGINE ROOM MAIN WIRE	**I 1**	34	COWL WIRE
E 7			**I 4**		
E 9					

F 6 Ⓐ, F 8 Ⓒ

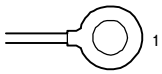

F 7 Ⓑ GRAY

F11

(SEE PAGE 20)

G 2

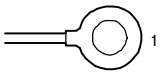

I12 BLACK

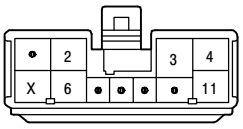

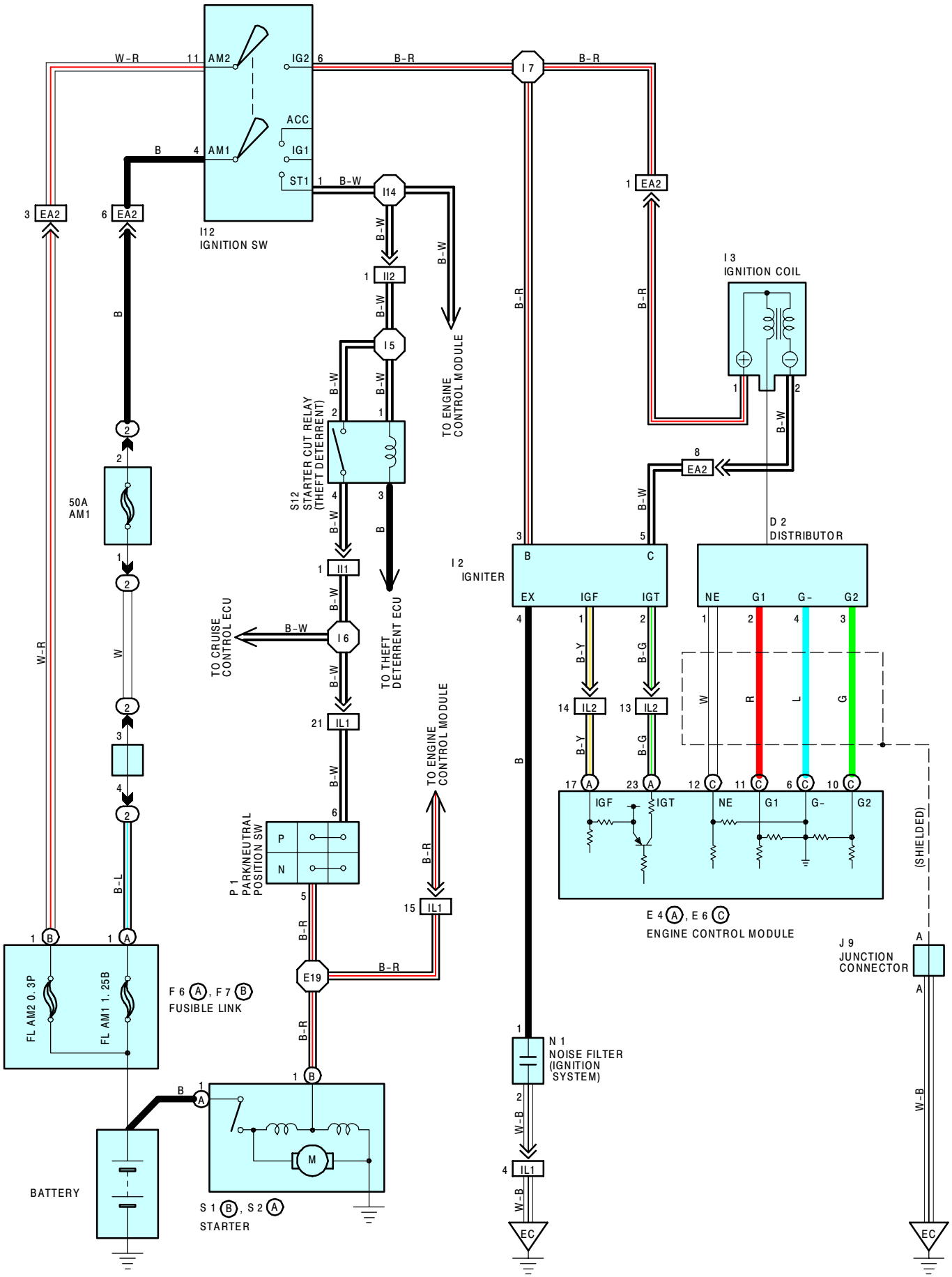
I12
IGNITION SW
AM2
AM1
IG2
ACC
IG1
ST1
W-R
B-R
B-W
B
I7
I14
I5
I2
I1
I6
IL1
IL2
EA2
E19
I3
IGNITION COIL
D2
DISTRIBUTOR
S12
STARTER CUT RELAY
(THEFT DETERRENT)
TO ENGINE
CONTROL MODULE
TO CRUISE
CONTROL ECU
TO THEFT
DETERRENT ECU
50A
AM1
P1
PARK/NEUTRAL
POSITION SW
P
N
FL AM2 0.3P
FL AM1 1.25B
F6 A, F7 B
FUSIBLE LINK
BATTERY
S1 B, S2 A
STARTER
M
I2
IGNITER
EX
IGF
IGT
B-Y
B-G
NE
G1
G-
G2
W
R
L
G
E4 A, E6 C
ENGINE CONTROL MODULE
(SHIELDED)
J9
JUNCTION
CONNECTOR
N1
NOISE FILTER
(IGNITION
SYSTEM)
W-B
EC

SERVICE HINTS

I12 IGNITION SW
4–1 : CLOSED WITH THE IGNITION SW AT **ST** POSITION
11–6 : CLOSED WITH THE IGNITION SW AT **ON** OR **ST** POSITION

S 1 (B), S 2 (A) STARTER
POINTS CLOSED WITH THE PARK/NEUTRAL POSITION SW AT **P** OR **N** POSITION AND THE IGNITION SW AT **ST** POSITION

P 1 PARK/NEUTRAL POSITION SW
6–5 : CLOSED WITH THE A/T SHIFT LEVER IN **P** OR **N** POSITION

: PARTS LOCATION

CODE		SEE PAGE	CODE	SEE PAGE	CODE		SEE PAGE
D 2		22	**I 2**	23	**P 1**		23
E 4	A	24	**I 3**	23	**S 1**	B	23
E 6	C	24	**I12**	25	**S 2**	A	23
F 6	A	22	**J 9**	25	**S12**		25
F 7	B	22	**N 1**	23			

: RELAY BLOCKS

CODE	SEE PAGE	RELAY BLOCKS (RELAY BLOCK LOCATION)
2	18	R/B NO. 2 (FRONT SIDE OF LEFT FENDER)

: CONNECTOR JOINING WIRE HARNESS AND WIRE HARNESS

CODE	SEE PAGE	JOINING WIRE HARNESS AND WIRE HARNESS (CONNECTOR LOCATION)
EA2	30	COWL WIRE AND ENGINE ROOM MAIN WIRE (LEFT FENDER)
II1	32	COWL WIRE AND SECURITY WIRE (LEFT KICK PANEL)
II2	32	SECURITY WIRE AND COWL WIRE (LEFT KICK PANEL)
IL1	34	ENGINE WIRE AND COWL WIRE (BEHIND GLOVE BOX)
IL2		

: GROUND POINTS

CODE	SEE PAGE	GROUND POINTS LOCATION
EC	30	AIR INTAKE CHAMBER

: SPLICE POINTS

CODE	SEE PAGE	WIRE HARNESS WITH SPLICE POINTS	CODE	SEE PAGE	WIRE HARNESS WITH SPLICE POINTS
E19	30	ENGINE WIRE	**I 7**	34	COWL WIRE
I 5	34	SECURITY WIRE	**I14**		
I 6	34	COWL WIRE			

D 2 BLACK

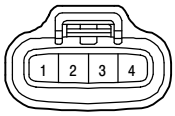

E 4 (A) DARK GRAY

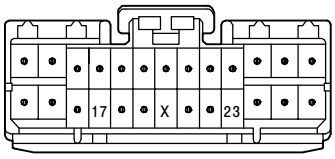

E 6 (C) DARK GRAY

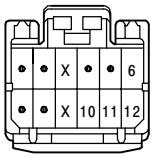

F 6 (A)

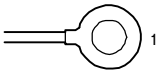

F 7 (B) GRAY

I 2 DARK GRAY

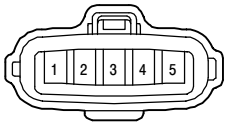

I 3 BLACK

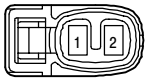

I12 BLACK

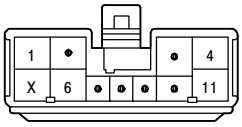

J 9

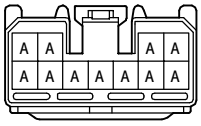

(HINT : SEE PAGE 7)

N 1 GRAY

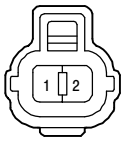

P 1 GRAY

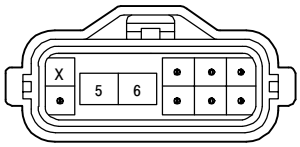

S 1 (B) BLACK

S 2 (A)

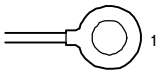

S12 BLACK

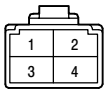

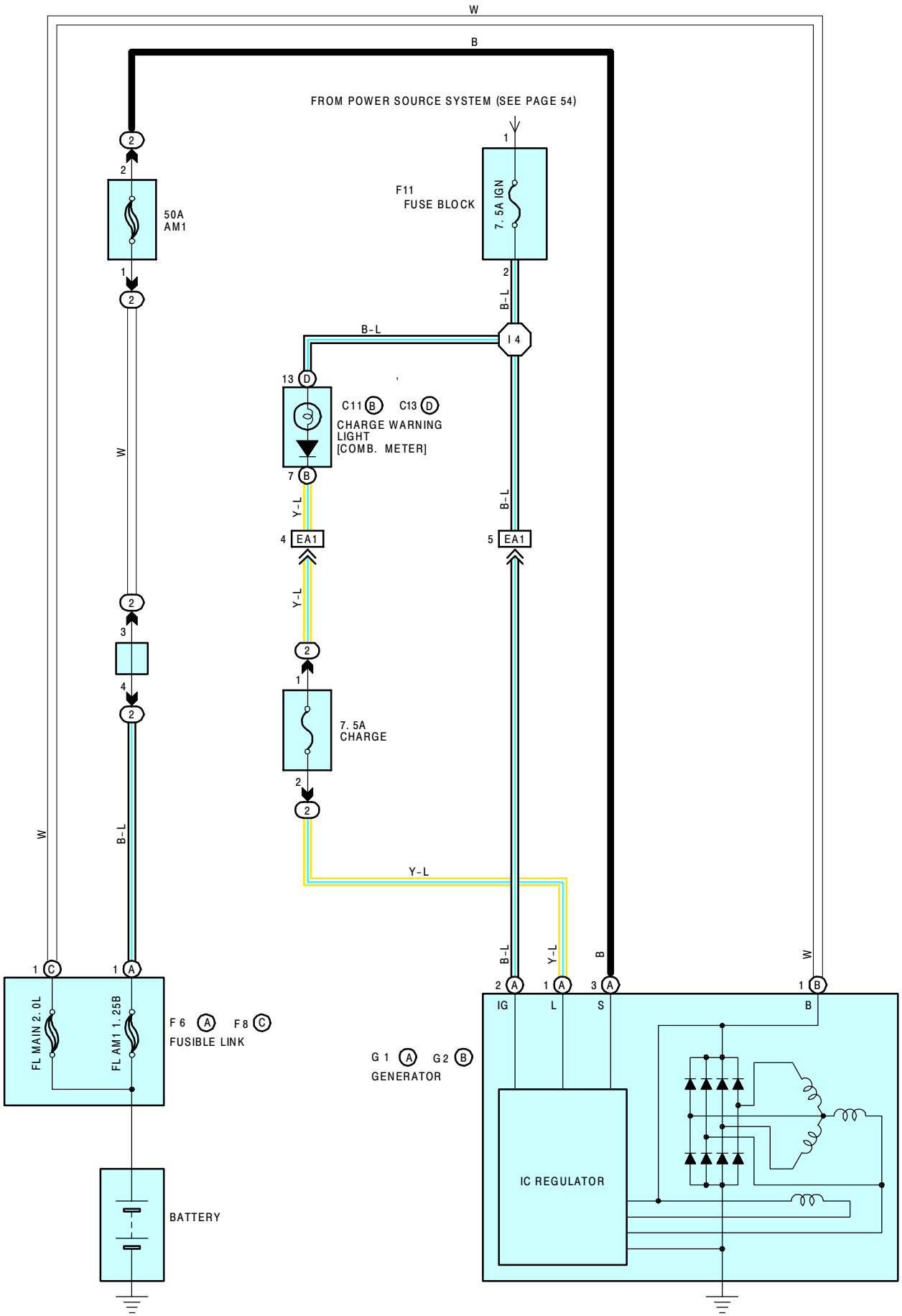
W
B
FROM POWER SOURCE SYSTEM (SEE PAGE 54)
50A
AM1
F11
FUSE BLOCK
7. 5A IGN
B-L
I 4
C11 B C13 D
CHARGE WARNING
LIGHT
[COMB. METER]
Y-L
EA1
7. 5A
CHARGE
FL MAIN 2. 0L
FL AM1 1. 25B
F6 A F8 C
FUSIBLE LINK
G1 A G2 B
GENERATOR
IG
L
S
IC REGULATOR
BATTERY

SERVICE HINTS

G 1 (A), G 2 (B) GENERATOR

(B) 1–GROUND : **13.9–15.1** VOLTS WITH THE ENGINE RUNNING AT **2000** RPM AND **25**°C (**77**°F)
13.5–14.3 VOLTS WITH THE ENGINE RUNNING AT **2000** RPM AND **115**°C (**239**°F)

(A) 3–GROUND : **0–4** VOLTS WITH THE IGNITION SW AT **ON** POSITION AND ENGINE NOT RUNNING

○ : PARTS LOCATION

CODE		SEE PAGE	CODE		SEE PAGE	CODE	SEE PAGE
C11	B	24	**G 2**	B	22	**F11**	25
C13	D	24	**F 6**	A	22		
G 1	A	22	**F 8**	C	22		

⬭ : RELAY BLOCKS

CODE	SEE PAGE	RELAY BLOCKS (RELAY BLOCK LOCATION)
2	18	R/B NO. 2 (FRONT SIDE OF LEFT FENDER)

▭ : CONNECTOR JOINING WIRE HARNESS AND WIRE HARNESS

CODE	SEE PAGE	JOINING WIRE HARNESS AND WIRE HARNESS (CONNECTOR LOCATION)
EA1	30	COWL WIRE AND ENGINE ROOM MAIN WIRE (LEFT FENDER)

⬡ : SPLICE POINTS

CODE	SEE PAGE	WIRE HARNESS WITH SPLICE POINTS	CODE	SEE PAGE	WIRE HARNESS WITH SPLICE POINTS
I 4	34	COWL WIRE			

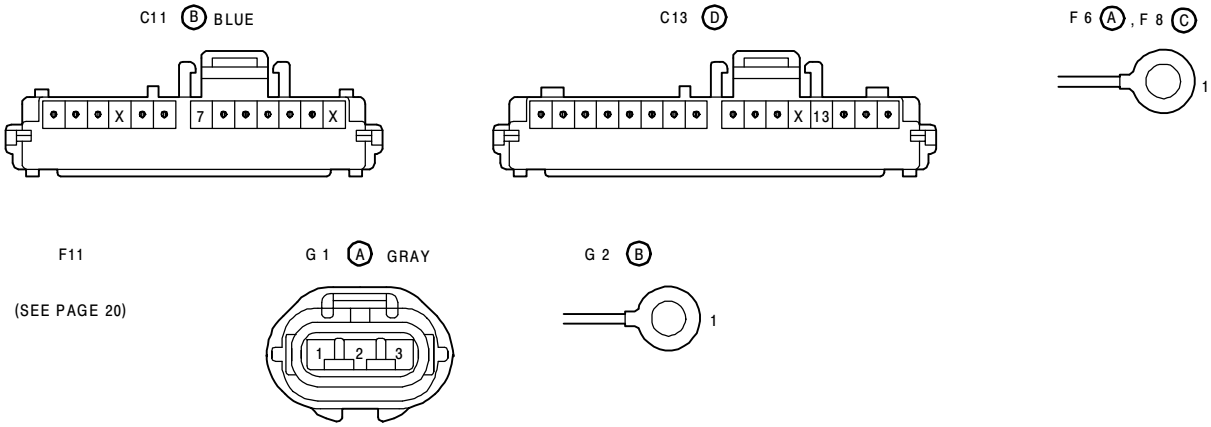

SYSTEM OUTLINE

THE ENGINE CONTROL SYSTEM UTILIZES A MICROCOMPUTER AND MAINTAINS OVERALL CONTROL OF THE ENGINE, ETC. AN OUTLINE OF THE ENGINE CONTROL IS GIVEN HERE.

1. INPUT SIGNALS

(1) ENGINE COOLANT TEMP. SIGNAL CIRCUIT

THE ENGINE COOLANT TEMP. SENSOR DETECTS THE ENGINE COOLANT TEMP. AND HAS A BUILT–IN THERMISTOR WITH A RESISTANCE WHICH VARIES ACCORDING TO THE WATER TEMP. IS INPUT INTO **TERMINAL THW** OF THE ENGINE CONTROL MODULE AS A CONTROL SIGNAL.

(2) INTAKE AIR TEMP. SIGNAL CIRCUIT

THE INTAKE AIR TEMP. SENSOR IS INSTALLED IN THE MASS AIR FLOW METER AND DETECTS THE INTAKE AIR TEMP. WHICH IS INPUT AS A CONTROL SIGNAL TO **TERMINAL THA** OF THE ENGINE CONTROL MODULE.

(3) OXYGEN DENSITY SIGNAL CIRCUIT

THE OXYGEN DENSITY IN THE EXHAUST EMISSION IS DETECTED AND INPUT AS A CONTROL SIGNAL FROM THE HEATED OXYGEN SENSOR (BANK 1 SENSOR 1, BANK 1 SENSOR 2) TO **TERMINALS OX1**, **OX2** OF THE ENGINE CONTROL MODULE.

(4) RPM SIGNAL CIRCUIT

CRANKSHAFT POSITION IS DETECTED BY THE CRANKSHAFT POSITION SENSOR AND THE PICK–UP COIL INSTALLED INSIDE THE DISTRIBUTOR. THE CRANKSHAFT POSITION IS INPUT AS A CONTROL SIGNAL TO **TERMINAL NE2+** OF THE ENGINE CONTROL MODULE, AND ENGINE SPEED IS INPUT TO **TERMINAL NE**.

(5) THROTTLE POSITION SIGNAL CIRCUIT

THE THROTTLE POSITION SENSOR DETECTS THE THROTTLE VALVE OPENING ANGLE AS A CONTROL SIGNAL WHICH IS INPUT INTO **TERMINAL VTA** OF THE ENGINE CONTROL MODULE. WHEN THE VALVE IS COMPLETELY CLOSED, THE ENGINE IDLING SIGNAL IS INPUT INTO **TERMINAL IDL**.

(6) VEHICLE SPEED CIRCUIT

THE VEHICLE SPEED IS DETECTED BY VEHICLE SPEED SENSOR INSTALLED IN THE COMBINATION METER, AND THE SIGNAL IS INPUT TO **TERMINAL SPD** OF THE ENGINE CONTROL MODULE.

(7) NEUTRAL POSITION SIGNAL CIRCUIT

THE PARK/NEUTRAL POSITION SW DETECTS WHETHER THE SHIFT POSITION IS IN “N” AND “P” OR NOT, AND THE SIGNAL IS INPUT INTO **TERMINAL STA** OF THE ENGINE CONTROL MODULE.

(8) A/C SW SIGNAL CIRCUIT

THE OPERATING VOLTAGE OF THE A/C MAGNETIC CLUTCH IS DETECTED, AND THE SIGNAL IS INPUT INTO **TERMINAL A/C** OF THE ENGINE CONTROL MODULE AS A CONTROL SIGNAL.

(9) BATTERY SIGNAL CIRCUIT

VOLTAGE IS CONSTANTLY APPLIED TO **TERMINAL BATT** OF THE ENGINE CONTROL MODULE. WITH THE IGNITION SW TURNED ON, THE VOLTAGE FOR ENGINE CONTROL MODULE START–UP POWER SUPPLY IS APPLIED TO **TERMINAL +B** OF THE ENGINE CONTROL MODULE VIA THW EFI MAIN RELAY

THE CURRENT FLOW THROUGH THE **IGN** FUSE FLOWS TO **TERMINAL IGSW** OF THE ENGINE CONTROL MODULE.

(10) INTAKE AIR VOLUME SIGNAL CIRCUIT

INTAKE AIR VOLUME IS DETECTED BY THE MASS AIR FLOW, AND THE SIGNAL IS INPUT TO **TERMINAL VG** OF THE ENGINE CONTROL MODULE AS A CONTROL SIGNAL.

(11) STOP LIGHT SW SIGNAL CIRCUIT

THE STOP LIGHT SW IS USED TO DETECT WHETHER THE VEHICLE IS BRAKING OR NOT, AND THE SIGNAL IS INPUT INTO **TERMINAL STP** OF THE ENGINE CONTROL MODULE AS A CONTROL SIGNAL.

(12) STARTER SIGNAL CIRCUIT

TO CONFIRM WHETHER THE ENGINE IS CRANKING, VOLTAGE IS APPLIED TO THE STARTER MOTOR DURING CRANKING IS DETECTED AND THE SIGNAL IS INPUT INTO **TERMINAL NSW** OF THE ENGINE CONTROL MODULE AS A CONTROL SIGNAL.

(13) ENGINE KNOCK SIGNAL CIRCUIT

ENGINE KNOCKING IS DETECTED BY THE KNOCK SENSOR 1 AND 2, AND THE SIGNAL IS INPUT INTO **TERMINALS KNK1** AND **KNK2** AS A CONTROL SIGNAL.

2. CONTROL SYSTEM

* SFI SYSTEM

THE SFI SYSTEM MONITORS THE ENGINE CONDITION THROUGH THE SIGNALS INPUT FROM EACH SENSOR (INPUT SIGNALS FROM (1) TO (13) ETC.) TO THE ENGINE CONTROL MODULE. THE BEST FUEL INJECTION TIMING IS DECIDED BASED ON THIS DATA AND THE PROGRAM MEMORIZED BY THE ENGINE CONTROL MODULE, AND THE CONTROL SIGNAL IS OUTPUT TO **TERMINALS #10, #20, #30, #40, #50** AND **#60** OF THE ENGINE CONTROL MODULE TO OPERATE THE INJECTOR. (INJECT THE FUEL). THE SFI SYSTEM PRODUCES CONTROL OF FUEL INJECTION OPERATION BY THE ENGINE CONTROL MODULE IN RESPONSE TO THE DRIVING CONDITIONS.

* ESA SYSTEM

THE ESA SYSTEM MONITORS THE ENGINE CONDITION THROUGH THE SIGNALS INPUT TO THE ENGINE CONTROL MODULE FROM EACH SENSOR (INPUT SIGNALS FROM (1), (2), (4) TO (13) ETC.). THE BEST IGNITION TIMING IS DECIDED ACCORDING TO THIS DATA AND THE MEMORIZED DATA IN THE ENGINE CONTROL MODULE, AND THE CONTROL SIGNAL IS OUTPUT TO **TERMINAL IGT**, THIS SIGNAL CONTROLS THE IGNITER TO PROVIDE THE BEST IGNITION TIMING FOR THE DRIVING CONDITIONS.

* HEATED OXYGEN SENSOR HEATER CONTROL SYSTEM

THE HEATED OXYGEN SENSOR HEATER CONTROL SYSTEM TURNS THE HEATER ON WHEN THE INTAKE AIR VOLUME IS LOW (TEMP. OF EXHAUST EMISSIONS IS LOW), AND WARMS UP THE OXYGEN SENSOR TO IMPROVE DETECTION PERFORMANCE OF THE SENSOR. THE ENGINE CONTROL MODULE EVALUATES THE SIGNALS FROM EACH SENSOR (INPUT SIGNALS FROM (1), (2), (4), (9) TO (11) ETC.), AND OUTPUTS CURRENT TO **TERMINALS HT** AND **HT2** TO CONTROL THE HEATER.

* IDLE AIR CONTROL SYSTEM

THE IDLE AIR CONTROL SYSTEM (STEP MOTOR TYPE) INCREASES THE ENGINE SPEED AND PROVIDES IDLING STABILITY FOR FAST IDLE–UP WHEN THE ENGINE IS COLD AND WHEN THE IDLE SPEED HAS DROPPED DUE TO ELECTRICAL LOAD AND SO ON. THE ENGINE CONTROL MODULE EVALUATES THE SIGNALS FROM EACH SENSOR (INPUT SIGNALS FROM (1), (4), (5), (8), (9), (11) ETC.) AND OUTPUTS CURRENT TO **TERMINALS ISC1, ISC2, ISC3** AND **ISC4** TO CONTROL THE IDLE AIR CONTROL VALVE.

* EGR CUT CONTROL SYSTEM

THE EGR CUT CONTROL SYSTEM CONTROLS THE VSV (EGR) BY EVALUATING THE SIGNAL FROM EACH SENSOR (INPUT SIGNALS FROM (1), (5), (9)), AND OUTPUTS CURRENT TO **TERMINAL EGR** OF THE ENGINE CONTROL MODULE.

* FUEL PUMP CONTROL SYSTEM

THE ENGINE CONTROL MODULE OUTPUTS CURRENT TO **TERMINAL FPR** AND CONTROLS THE FUEL PUMP RELAY AND FUEL PUMP DRIVE SPEED IN RESPONSE TO CONDITIONS.

* FUEL PRESSURE CONTROL SYSTEM

THE FUEL PRESSURE UP SYSTEM CAUSES THE VSV (FUEL PRESSURE CONTROL) TO COME ON FOR HIGH TEMP. STARTS AND IMMEDIATELY AFTER STARTING IN ORDER TO INCREASE THE FUEL PRESSURE, IMPROVE STARTABILITY AT HIGH TEMPERATURES AND PROVIDE STABLE IDLING. THE ENGINE CONTROL MODULE EVALUATES THE SIGNALS FROM EACH SENSOR (INPUT SIGNALS FROM (1), (2), (5), (11)), OUTPUTS CURRENT TO **TERMINAL FPU** AND CONTROLS THE VSV.

3. DIAGNOSIS SYSTEM

WITH THE DIAGNOSIS SYSTEM, WHEN THERE IS A MALFUNCTION IN THE ENGINE CONTROL MODULE SIGNAL SYSTEM, THE MALFUNCTIONING SYSTEM IS RECORDED IN THE MEMORY. THE MALFUNCTIONING SYSTEM CAN BE FOUND BY READING THE CODE DISPLAYED BY THE MALFUNCTION INDICATOR LAMP.

4. FAIL–SAFE SYSTEM

WHEN A MALFUNCTION HAS OCCURRED IN ANY SYSTEMS, IF THERE IS A POSSIBILITY OF ENGINE TROUBLE BEING CAUSED BY CONTINUED CONTROL BASED ON THE SIGNALS FROM THAT SYSTEM, THE FAIL–SAFE SYSTEM EITHER CONTROLS THE SYSTEM BY USING DATA (STANDARD VALUES) RECORDED IN THE ENGINE CONTROL MODULE MEMORY OR ELSE STOPS THE ENGINE.

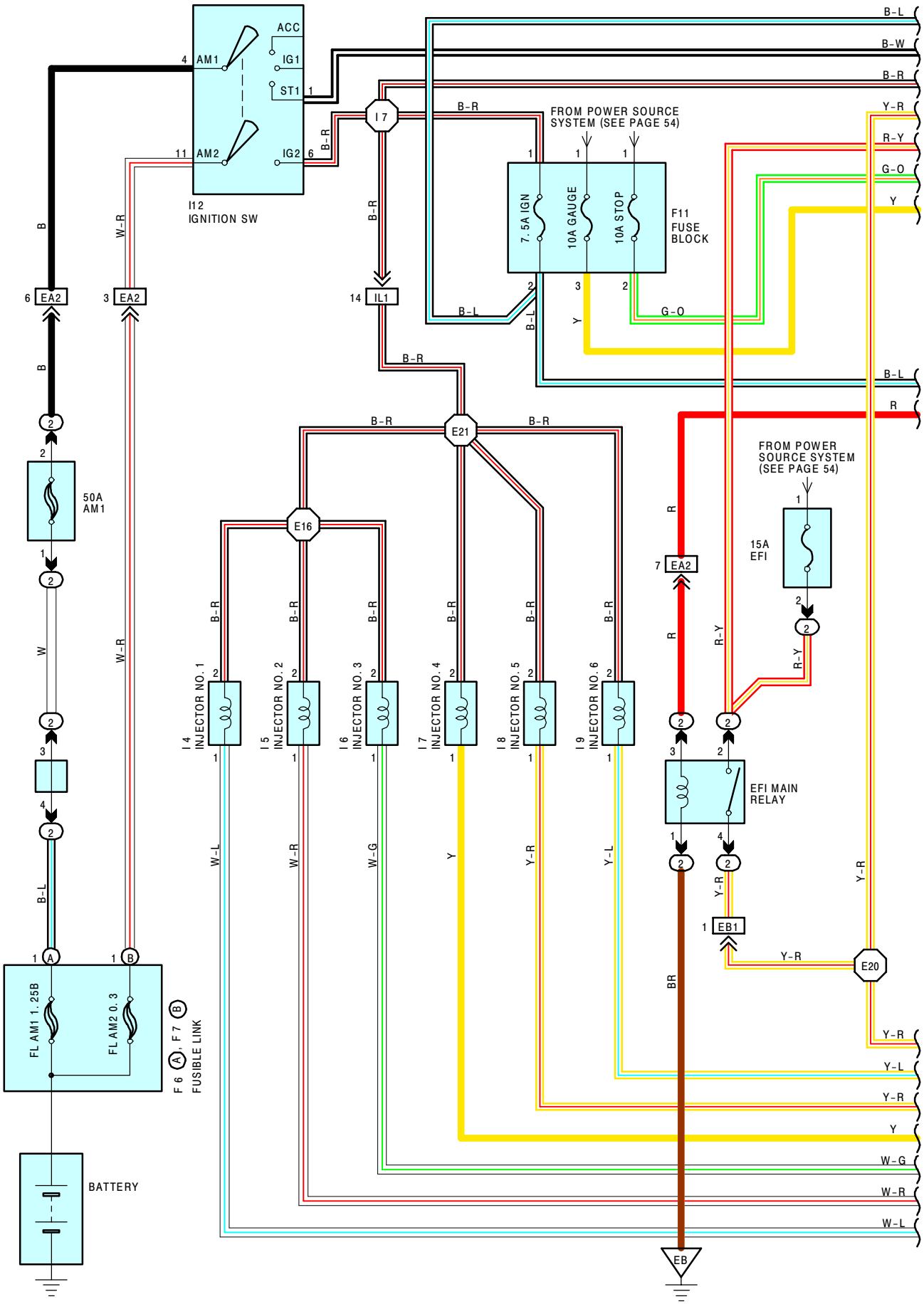
ACC
IG1
ST1
AM1
AM2
IG2
I12
IGNITION SW
I7
FROM POWER SOURCE SYSTEM (SEE PAGE 54)
7.5A IGN
10A GAUGE
10A STOP
F11
FUSE BLOCK
EA2
IL1
E21
E16
50A
AM1
15A
EFI
I4
INJECTOR NO. 1
I5
INJECTOR NO. 2
I6
INJECTOR NO. 3
I7
INJECTOR NO. 4
I8
INJECTOR NO. 5
I9
INJECTOR NO. 6
EFI MAIN
RELAY
EB1
E20
FL AM1 1.25B
FL AM2 0.3
F6 (A), F7 (B)
FUSIBLE LINK
BATTERY
EB
B-L
B-W
B-R
Y-R
R-Y
G-O
Y
R
W
W-R
W-L
W-G
BR

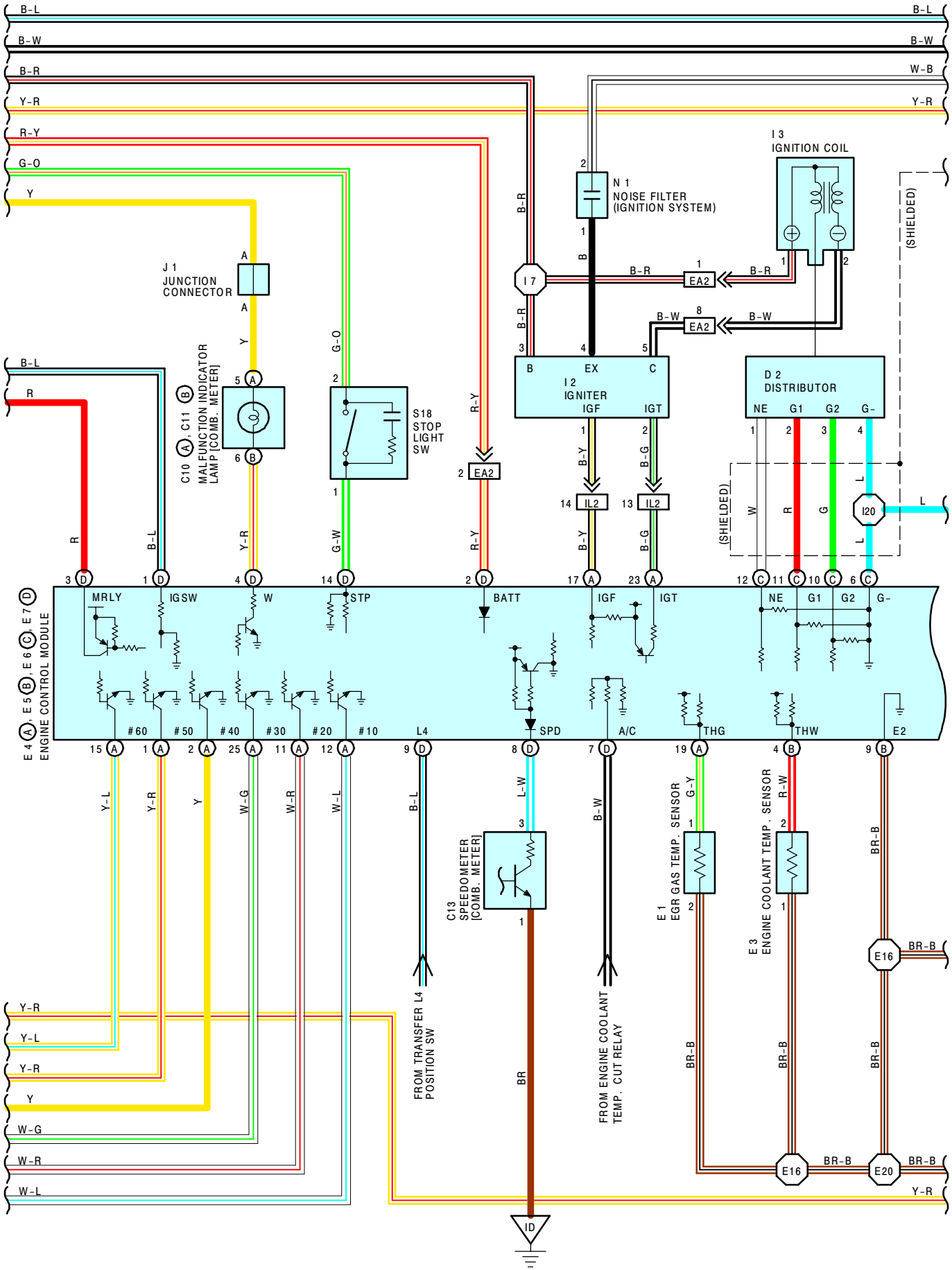
B-L
B-W
B-R
Y-R
R-Y
G-O
Y
W-B
I 3
IGNITION COIL
N 1
NOISE FILTER
(IGNITION SYSTEM)
(SHIELDED)
J 1
JUNCTION
CONNECTOR
I 7
EA2
B-W
I 2
IGNITER
EX
IGF
IGT
D 2
DISTRIBUTOR
NE
G1
G2
G-
IL2
I20
L
R
W
G
C10 (A), C11 (B)
MALFUNCTION INDICATOR
LAMP [COMB. METER]
S18
STOP
LIGHT
SW
G-W
Y-R
B-Y
B-G
E 4 (A), E 5 (B), E 6 (C), E 7 (D)
ENGINE CONTROL MODULE
MRLY
IGSW
STP
BATT
SPD
A/C
THG
THW
E2
#60
#50
#40
#30
#20
#10
L4
Y-L
W-G
W-R
W-L
L-W
BR
C13
SPEEDOMETER
[COMB. METER]
FROM TRANSFER L4
POSITION SW
FROM ENGINE COOLANT
TEMP. CUT RELAY
E 1
EGR GAS TEMP. SENSOR
G-Y
E 3
ENGINE COOLANT TEMP. SENSOR
R-W
BR-B
E16
E20
ID

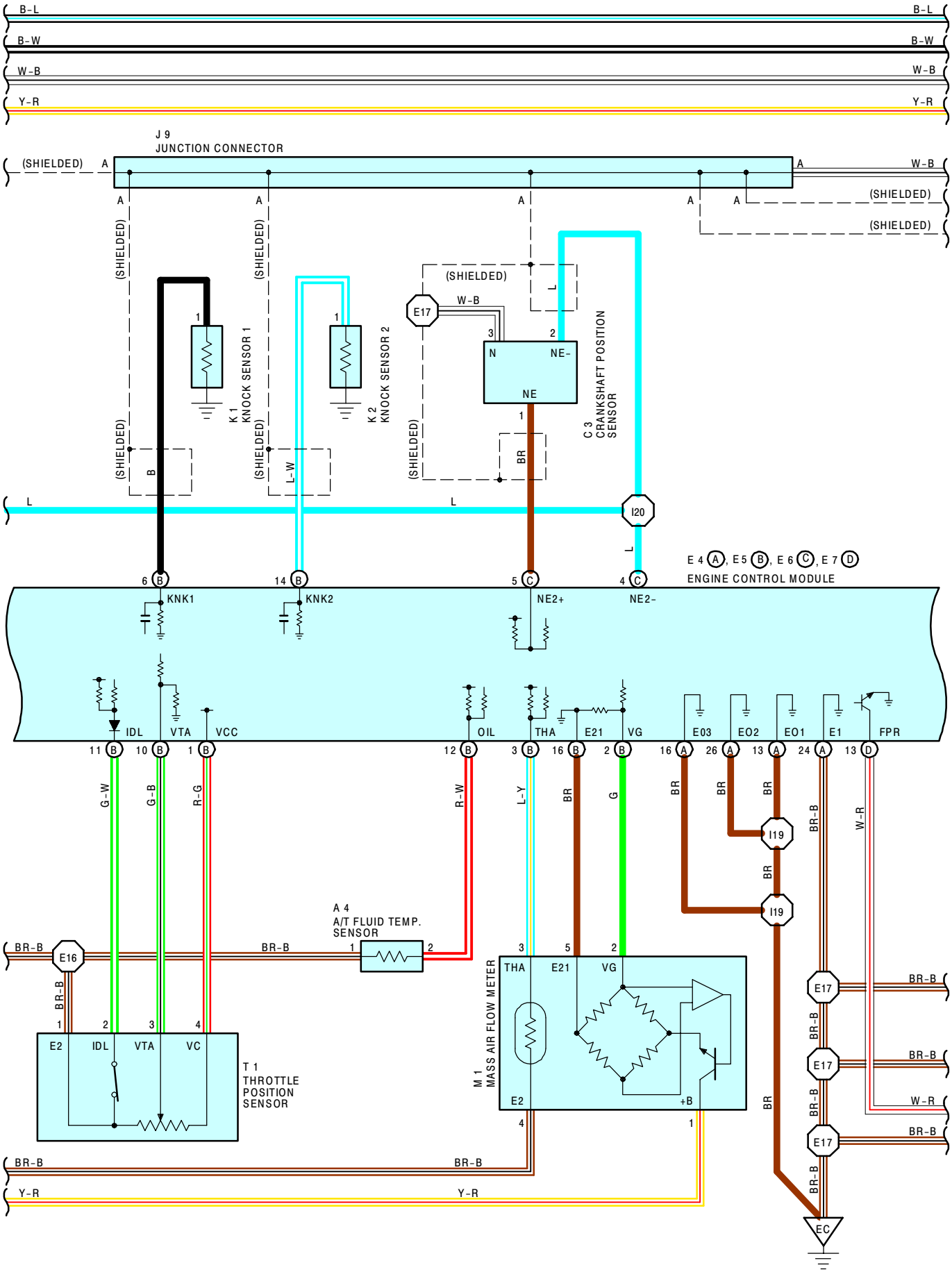
B-L
B-W
W-B
Y-R
J 9
JUNCTION CONNECTOR
(SHIELDED)
K 1
KNOCK SENSOR 1
K 2
KNOCK SENSOR 2
E17
N
NE-
NE
C 3
CRANKSHAFT POSITION
SENSOR
I20
E 4 A, E 5 B, E 6 C, E 7 D
ENGINE CONTROL MODULE
KNK1
KNK2
NE2+
NE2-
IDL
VTA
VCC
OIL
THA
E21
VG
E03
EO2
EO1
E1
FPR
I19
A 4
A/T FLUID TEMP.
SENSOR
E16
E2
IDL
VTA
VC
T 1
THROTTLE
POSITION
SENSOR
M 1
MASS AIR FLOW METER
+B
EC

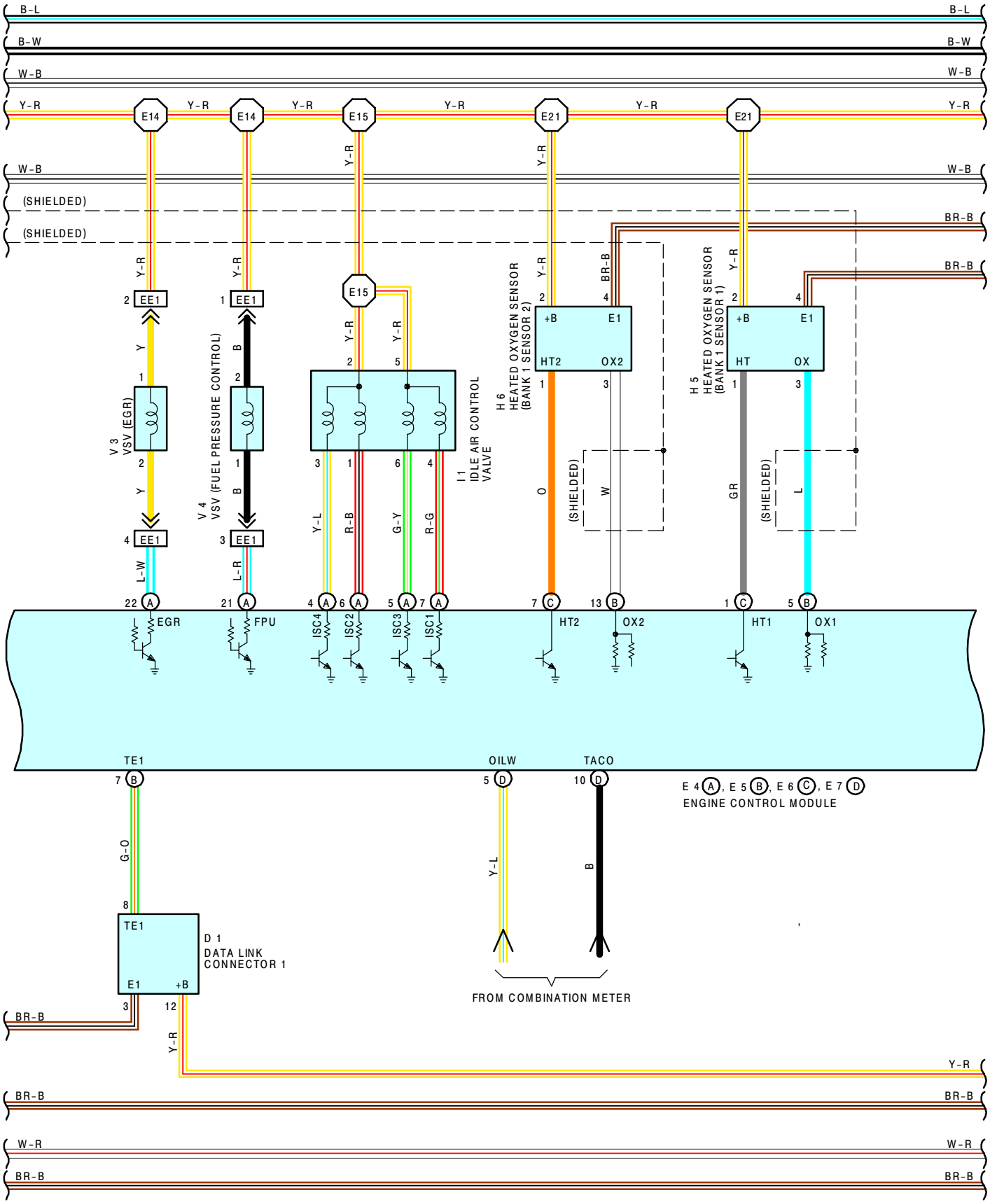
B-L
B-W
W-B
Y-R
E14
E15
E21
(SHIELDED)
BR-B
EE1
V 3
VSV (EGR)
V 4
VSV (FUEL PRESSURE CONTROL)
I 1
IDLE AIR CONTROL VALVE
H 6
HEATED OXYGEN SENSOR (BANK 1 SENSOR 2)
H 5
HEATED OXYGEN SENSOR (BANK 1 SENSOR 1)
+B
E1
HT2
OX2
HT
OX
EGR
FPU
ISC4
ISC2
ISC3
ISC1
HT1
OX1
TE1
OILW
TACO
E 4 A, E 5 B, E 6 C, E 7 D
ENGINE CONTROL MODULE
D 1
DATA LINK CONNECTOR 1
FROM COMBINATION METER
W-R

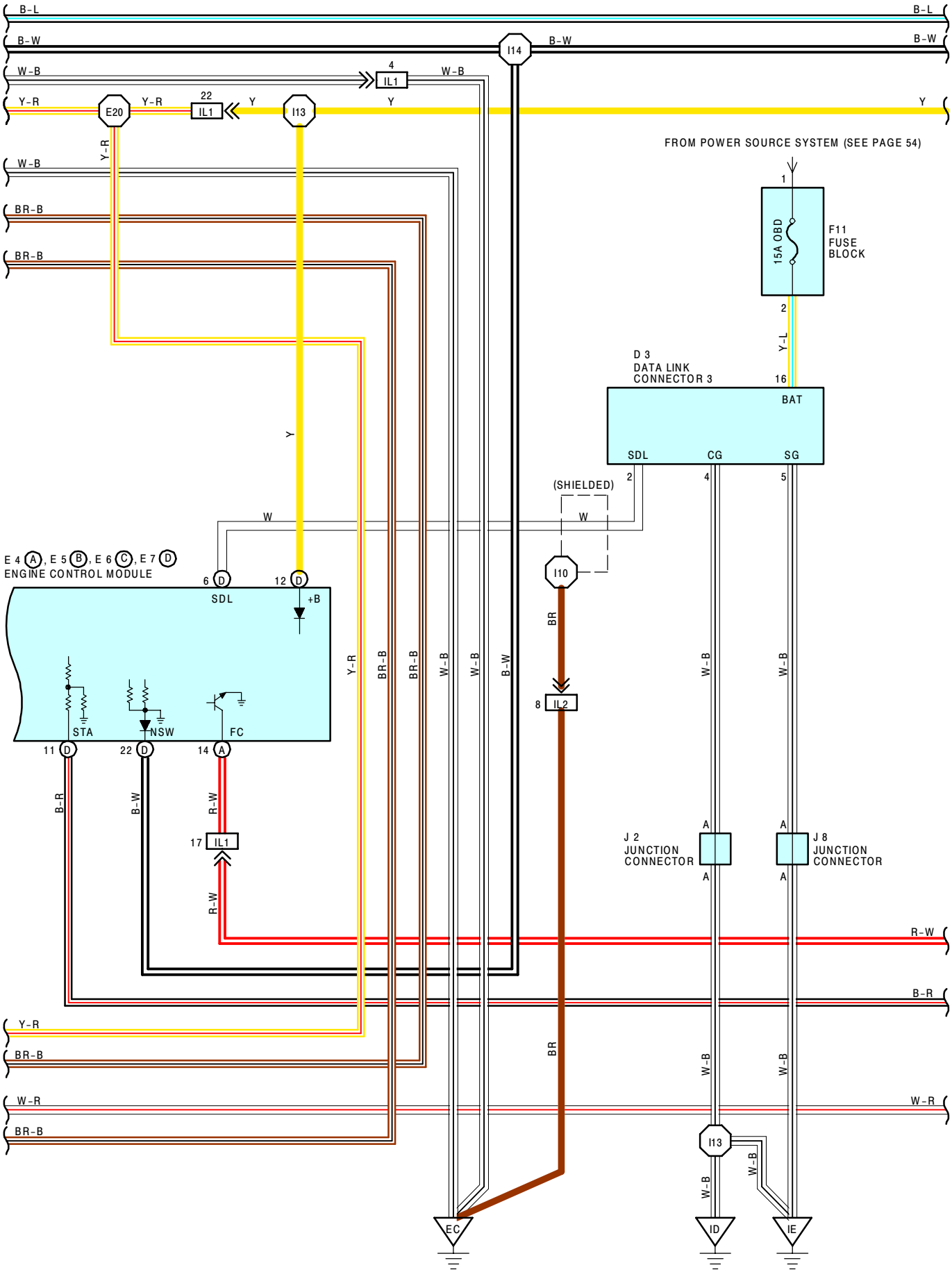
B-L
B-W
W-B
Y-R
Y
I14
IL1
E20
I13
FROM POWER SOURCE SYSTEM (SEE PAGE 54)
BR-B
15A OBD
F11 FUSE BLOCK
Y-L
D 3 DATA LINK CONNECTOR 3
BAT
SDL
CG
SG
(SHIELDED)
W
E 4 A, E 5 B, E 6 C, E 7 D
ENGINE CONTROL MODULE
+B
STA
NSW
FC
I10
BR
IL2
B-R
R-W
J 2 JUNCTION CONNECTOR
J 8 JUNCTION CONNECTOR
W-R
EC
ID
IE

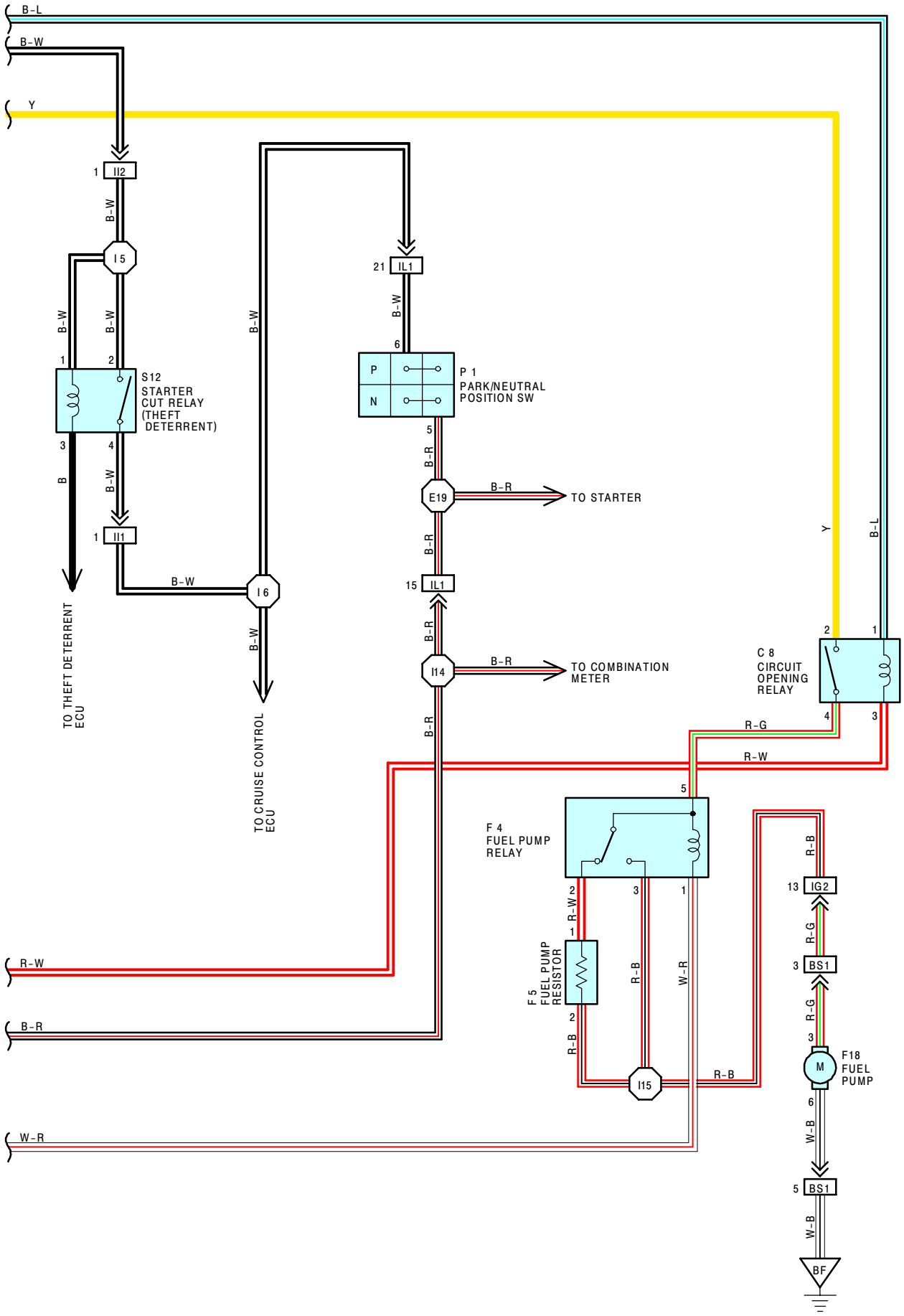
B-L
B-W
Y
1 II2
B-W
I 5
B-W
B-W
1
2
S12
STARTER
CUT RELAY
(THEFT
DETERRENT)
3
4
B
B-W
1 II1
B-W
I 6
B-W
TO THEFT DETERRENT
ECU
TO CRUISE CONTROL
ECU
21 IL1
B-W
6
P
N
P 1
PARK/NEUTRAL
POSITION SW
5
B-R
E19
B-R
TO STARTER
B-R
15 IL1
B-R
I14
B-R
TO COMBINATION
METER
B-R
Y
B-L
2
1
C 8
CIRCUIT
OPENING
RELAY
4
3
R-G
R-W
5
F 4
FUEL PUMP
RELAY
2
3
1
R-W
1
F 5
FUEL PUMP
RESISTOR
2
R-B
R-B
W-R
I15
R-B
R-B
13 IG2
R-G
3 BS1
R-G
3
M
F18
FUEL
PUMP
6
W-B
5 BS1
W-B
BF
R-W
B-R
W-R

SERVICE HINTS

EFI MAIN RELAY
(2) 2 – **(2)** 4 : CLOSED WITH THE IGNITION SW AT **ON** OR **ST** POSITION

E 4 (A), E 5 (B), E 6 (C), E 7 (D) ENGINE CONTROL MODULE
(VOLTAGE AT THE ENGINE CONTROL MODULE)
BATT –E1 : ALWAYS **9.0–14.0** VOLTS
IGSW, +B, MRLY–E1 : **9.0–14.0** VOLTS WITH THE IGNITION SW ON
VCC –E2 : **4.5–5.5** VOLTS WITH THE IGNITION SW ON
IDL –E2 : **0–3.0** VOLTS WITH THE IGNITION SW ON AND THE THROTTLE VALVE FULLY CLOSE
9.0–14.0 VOLTS WITH THE IGNITION SW ON AND THE THROTTLE VALVE FULLY OPEN
VTA –E2 : **0.3–0.8** VOLTS WITH THE IGNITION SW ON AND THE THROTTLE VALVE FULLY CLOSE
3.2–4.9 VOLTS WITH THE IGNITION SW ON AND THE THROTTLE VALVE FULLY OPEN
THA –E2 : **0.5–3.4** VOLTS WITH THE IGNITION SW ON AND THE INTAKE AIR TEMP. **20**°C (**68**°F)
THW –E2 : **0.2–1.0** VOLTS WITH THE IGNITION SW ON AND THE ENGINE COOLANT TEMP. **80**°C (**176**°F)
STA –E1 : **6.0** VOLTS OR MORE WITH THE CLANKING
IGT –E1 : PULSE GENERATION WITH THE ENGINE RUNNING
#10, #20, #30–EO1, EO2 : **9.0–14.0** VOLTS WITH THE IGNITION SW ON
#40, #50, #60–EO1, EO2 : **9.0–14.0** VOLTS WITH THE IGNITION SW ON
IGF –E1 : **2.0** VOLTS OR LESS WITH THE IGNITION SW ON
PULSE GENERATION WITH THE ENGINE RUNNING
G1, G2–G– : PULSE GENERATION WITH THE ENGINE RUNNING
NE –G : PULSE GENERATION WITH THE ENGINE RUNNING
KNK1, KNK2–E1 : PULSE GENERATION WITH THE ENGINE RUNNING
ISC1, ISC2, ISC3, ISC4–E1 : **9.0–14.0** VOLTS WITH THE IGNITION SW ON
STA –E1 : **9.0–14.0** VOLTS OR LESS WITH THE IGNITION SW ON AND THE PARK/NEUTRAL POSITION SW AT **"P"** OR **"N"** POSITION
3.0 VOLTS WITH THE IGNITION SW ON AND THE PARK/NEUTRAL POSITION SW AT OTHER THAN **"P"** OR **"N"** POSITION
SPD –E1 : PULSE GENERATION WITH THE IGNITION SW ON AND ROTATE THE DRIVING WHEEL SLOWLY
TE1 –E1 : **9.0–14.0** VOLTS WITH THE IGNITION SW ON AND THE DATA LINK CONNECTOR 1 TE1–E1 NOT CONNECTED
1.5 VOLTS OR LESS WITH THE IGNITION SW ON AND THE DATA LINK CONNECTOR 1 TE1–E1 CONNECTED
W –E1 : **9.0–14.0** VOLTS WITH THE ENGINE RUNNING AND NO TROUBLE (MALFUNCTION INDICATOR LAMP OFF)
A/C –E1 : **7.5–14.0** VOLTS WITH THE AIR CONDITIONING ON
1.5 VOLTS OR LESS WITH THE AIR CONDITIONING OFF
STP –E1 : **7.5–14.0** VOLTS WITH THE STOP LIGHT SW ON (BRAKE PEDAL DEPRESSED)
1.5 VOLTS OR LESS WITH THE STOP LIGHT SW OFF

RESISTANCE AT ENGINE CONTROL MODULE CONNECTORS
(DISCONNECT WIRING CONNECTOR)
IDL –E2 : INFINITY (THROTTLE VALVE FULLY OPEN)
2.3 KΩ OR LESS (THROTTLE VALVE FULLY CLOSE)
VTA –E2 : **2.0–10.2** KΩ (THROTTLE VALVE FULLY OPEN)
0.2–5.7 KΩ (THROTTLE VALVE FULLY CLOSE)
VCC –E2 : **2.5–5.9** KΩ
THA –E2 : **2.0–3.0** KΩ (INTAKE AIR TEMP. **20**°C (**68**°F))
THW –E2 : **200–400** Ω (ENGINE COOLANT TEMP. **80**°C (**176**°F))
G1, G2–G– : **185–275** Ω (COLD (**–10**°C (**14**°F) TO **0**°C (**122**°F))
240–325 Ω (HOT (**50**°C (**122**°F) TO **100**°C (**212**°F))
NE –G– : **185–275** Ω (COLD (**–10**°C (**14**°F) TO **0**°C (**122**°F))
240–325 Ω (HOT (**50**°C (**122**°F) TO **100**°C (**212**°F))
ISC1, ISC2, ISC3, ISC4–+B : **10–30** Ω

I 1 IDLE AIR CONTROL VALVE
5–4, 6 : **10–30** Ω
2–1, 3 : **10–30** Ω

I 4, I 5, I 6, I 7, I 8, I 9 INJECTOR
1–2 : **12–16** Ω

H 5, H 6 HEATED OXYGEN SENSOR (BANK 1 SENSOR 1, BANK 1 SENSOR 2)
1–2 : **5.0–6.5** Ω

T 1 THROTTLE POSITION SENSOR
1–4 : **2.5–5.9** KΩ
1–3 : **2.0–10.2** KΩ WITH THE THROTTLE VALVE FULLY OPEN
0.2–5.7 KΩ WITH THE THROTTLE VALVE FULLY CLOSE
1–2 : INFINITY WITH THE CLEARANCE BETWEEN LEVER AND STOP THE SCREW **0.75** MM (**0.030** IN.)
2.3 KΩ LESS WITH THE CLEARANCE BETWEEN LEVER AND STOP THE SCREW **0.50** MM (**0.020** IN.)

F18 FUEL PUMP
3–6 : **0.2–3.0** Ω

F 5 FUEL PUMP RESISTOR
1–2 : APPROX. **0.73** Ω

E 1 EGR GAS TEMP. SENSOR
1–2 : **69–89** Ω (**50**°C, **122**°F)
11–15 Ω (**100**°C, **212**°F)
2–4 Ω (**150**°C, **302**°F)

V 4 VSV (FUEL PRESSURE CONTROL)
1–2 : **37–44** Ω (**20**°C, **68**°F)

SERVICE HINTS

V 3 VSV (EGR)
1–2 : **30–34** Ω (**20**°C, **68**°F)
E 3 ENGINE COOLANT TEMP. SENSOR
1–2 : **10–20** KΩ (**–20**°C, **–4**°F)
4–7 KΩ (**0**°C, **32**°F)
2–3 KΩ (**20**°C, **68**°F)
0.9–1.3 KΩ (**40**°C, **104**°F)
0.4–0.7 KΩ (**60**°C, **140**°F)
0.2–0.4 KΩ (**80**°C, **176**°F)

○ : PARTS LOCATION

CODE		SEE PAGE	CODE		SEE PAGE	CODE	SEE PAGE
A 4		22	**F 5**		22	**I12**	25
C 3		22	**F 6**	A	22	**J 1**	25
C 8		24	**F 7**	B	22	**J 2**	25
C10	A	24	**F11**		25	**J 8**	25
C11	B	24	**F18**		26	**J 9**	25
C13		24	**H 5**		22	**K 1**	23
D 1		22	**H 6**		22	**K 2**	23
D 2		22	**I 1**		23	**M 1**	23
D 3		24	**I 2**		23	**N 1**	23
E 1		22	**I 3**		23	**P 1**	23
E 3		22	**I 4**		23	**S12**	25
E 4	A	24	**I 5**		23	**S18**	25
E 5	B	24	**I 6**		23	**T 1**	23
E 6	C	24	**I 7**		23	**V 3**	23
E 7	D	24	**I 8**		23	**V 4**	23
F 4		22	**I 9**		23		

⬭ : RELAY BLOCKS

CODE	SEE PAGE	RELAY BLOCKS (RELAY BLOCK LOCATION)
2	18	R/B NO. 2 (FRONT SIDE OF LEFT FENDER)

▭ : CONNECTOR JOINING WIRE HARNESS AND WIRE HARNESS

CODE	SEE PAGE	JOINING WIRE HARNESS AND WIRE HARNESS (CONNECTOR LOCATION)
EA2	30	COWL WIRE AND ENGINE ROOM MAIN WIRE (LEFT FENDER)
EB1	30	ENGINE ROOM MAIN WIRE AND ENGINE WIRE (NEAR THE DISTRIBUTOR)
EE1	30	ENGINE WIRE AND VSV SUB WIRE (NEAR THE THROTTLE POSITION SENSOR)
IG2	32	COWL WIRE AND FLOOR WIRE (LEFT KICK PANEL)
II1	32	COWL WIRE AND SECURITY WIRE (LEFT KICK PANEL)
II2	32	SECURITY WIRE AND COWL WIRE (LEFT KICK PANEL)
IL1	34	ENGINE WIRE AND COWL WIRE (BEHIND GLOVE BOX)
IL2		
BS1	36	FLOOR WIRE AND LUGGAGE ROOM NO. 2 WIRE (BESIDE THE FUEL TANK)

▽ : GROUND POINTS

CODE	SEE PAGE	GROUND POINTS LOCATION
EB	30	FRONT SIDE OF LEFT FENDER
EC	30	AIR INTAKE CHAMBER
ID	32	LEFT KICK PANEL
IE	32	RIGHT KICK PANEL
BF	36	UNDER THE CENTER CONSOLE BOX

⬡ : SPLICE POINTS

CODE	SEE PAGE	WIRE HARNESS WITH SPLICE POINTS	CODE	SEE PAGE	WIRE HARNESS WITH SPLICE POINTS
E14	30	ENGINE WIRE	**I 6**	34	COWL WIRE
E15			**I 7**		
E16			**I10**		
E17			**I13**		
E19			**I14**		
E20			**I15**		
E21			**I19**	34	ENGINE WIRE
I 5	34	SECURITY WIRE	**I20**		

A 4

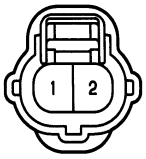

C 3 DARK GRAY

C 8

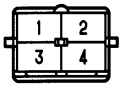

C10 (A) GRAY

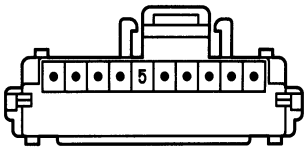

C11 (B) BLUE

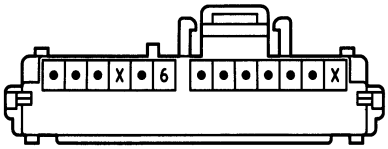

C13

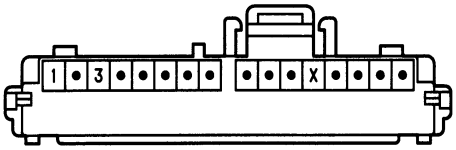

D 1 BLACK

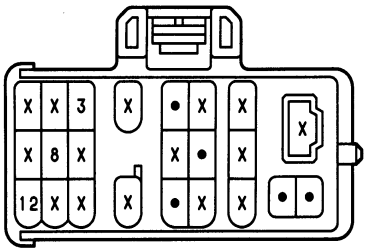

D 2 BLACK

D 3

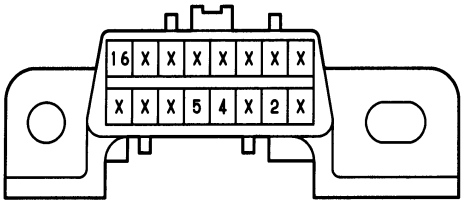

E 1 DARK GRAY

E 3 GREEN

E 4 (A) DARK GRAY

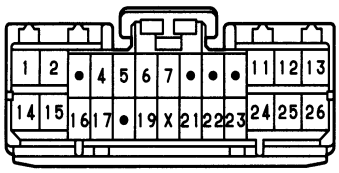

E 5 (B) DARK GRAY

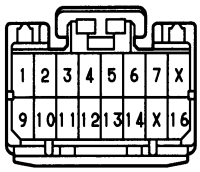

E 6 (C) DARK GRAY

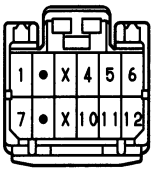

E 7 (D) DARK GRAY

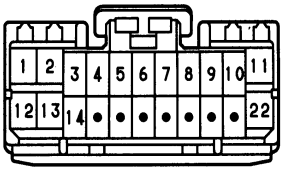

F 4 BLACK

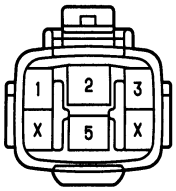

F 5 DARK GRAY

F 6 (A)

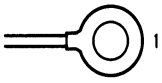

F 7 (B) GRAY

F11

(SEE PAGE 20)

F18 DARK GRAY

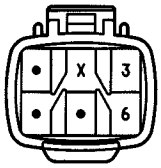

H 5 DARK GRAY

H 6 DARK GRAY

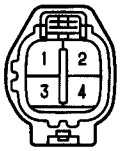

I 1 BLACK

I 2 DARK GRAY

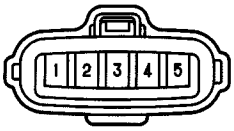

I 3 BLACK

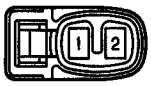

I 4, I 6, I 8 GRAY

I 5, I 7, I 9 BROWN

I12 BLACK

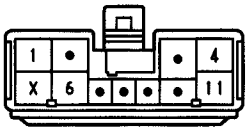

J 1

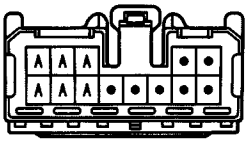

(HINT:SEE PAGE 7)

J 2 BLUE

(HINT:SEE PAGE 7)

J 8 BLUE

(HINT:SEE PAGE 7)

J 9

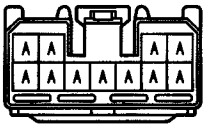

(HINT:SEE PAGE 7)

K 1, K 2 DARK GRAY

M 1 BLACK

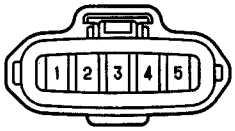

N 1 GRAY

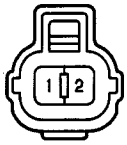

P 1 GRAY

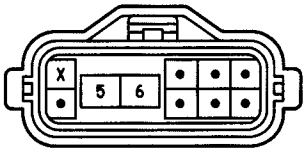

S12 BLACK

S18 BLACK

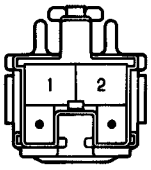

T 1 BLACK

V 3 BLUE

V 4 BROWN

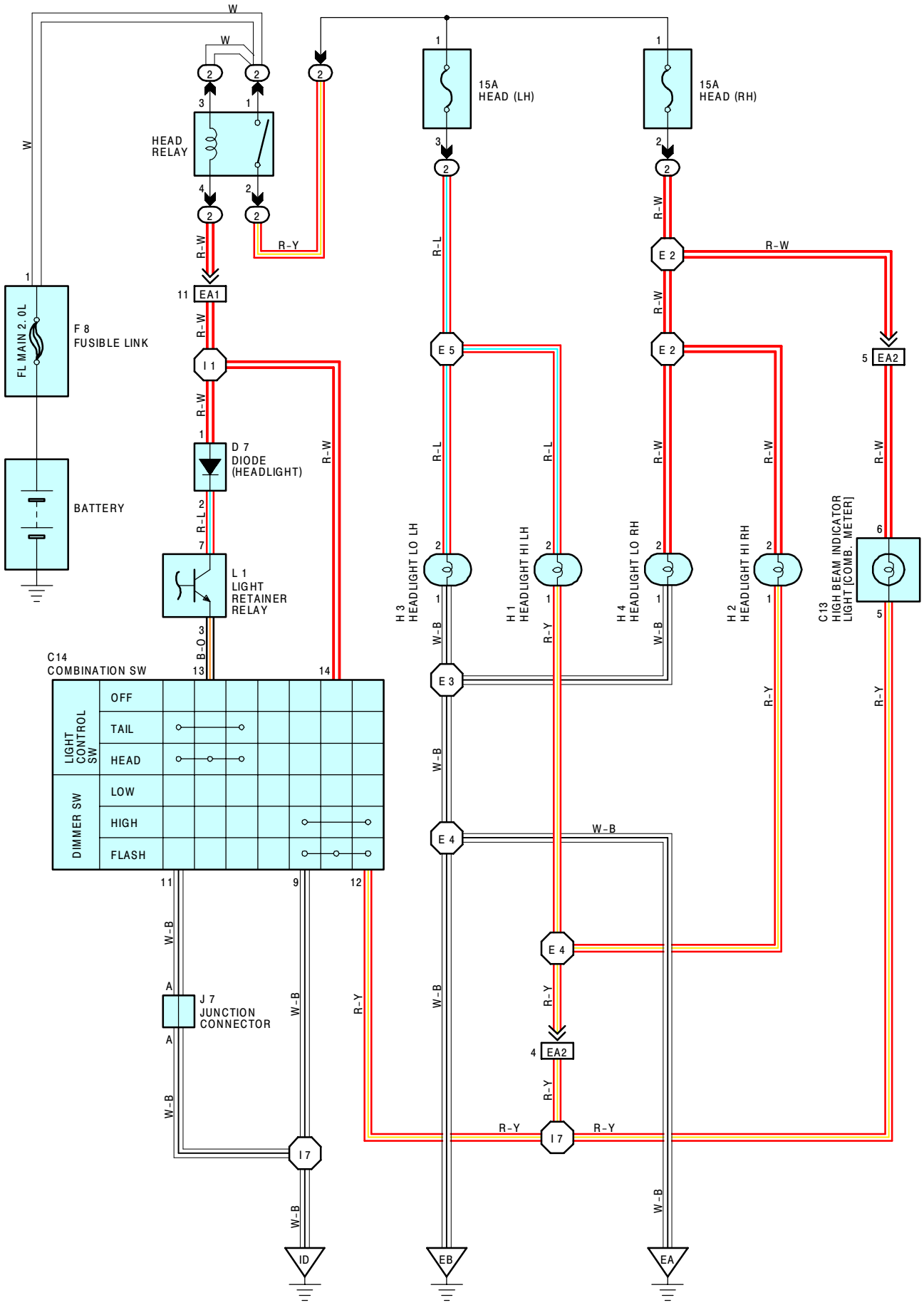
W
HEAD RELAY
15A HEAD (LH)
15A HEAD (RH)
R-W
R-Y
R-L
EA1
E 2
E 5
EA2
I 1
FL MAIN 2.0L
F 8 FUSIBLE LINK
D 7 DIODE (HEADLIGHT)
BATTERY
L 1 LIGHT RETAINER RELAY
B-O
H 3 HEADLIGHT LO LH
H 1 HEADLIGHT HI LH
H 4 HEADLIGHT LO RH
H 2 HEADLIGHT HI RH
C13 HIGH BEAM INDICATOR LIGHT [COMB. METER]
W-B
E 3
E 4
C14 COMBINATION SW
LIGHT CONTROL SW
OFF
TAIL
HEAD
DIMMER SW
LOW
HIGH
FLASH
J 7 JUNCTION CONNECTOR
I 7
ID
EB
EA

SERVICE HINTS

HEAD RELAY

(2) 1 – **(2)** 2 : CLOSED WITH THE LIGHT CONTROL SW AT **HEAD** POSITION OR THE DIMMER SW AT **FLASH** POSITION (WHEN THE LIGHT AUTO TURN OFF SYSTEM DOES NOT OPERATE)

C14 LIGHT CONTROL SW [COMB. SW]

13–11 : CLOSED WITH THE LIGHT CONTROL SW AT **HEAD** POSITION

C14 DIMMER SW [COMB. SW]

14–9 : CLOSED WITH THE DIMMER SW AT **FLASH** POSITION

12–9 : CLOSED WITH THE DIMMER SW AT **HIGH** OR **FLASH** POSITION

○ : PARTS LOCATION

CODE	SEE PAGE	CODE	SEE PAGE	CODE	SEE PAGE
C13	24	**H 1**	22	**J 7**	25
C14	24	**H 2**	22	**L 1**	25
D 7	24	**H 3**	22		
F 8	22	**H 4**	22		

⬭ : RELAY BLOCKS

CODE	SEE PAGE	RELAY BLOCKS (RELAY BLOCK LOCATION)
2	18	R/B NO. 2 (FRONT SIDE OF LEFT FENDER)

▭ : CONNECTOR JOINING WIRE HARNESS AND WIRE HARNESS

CODE	SEE PAGE	JOINING WIRE HARNESS AND WIRE HARNESS (CONNECTOR LOCATION)
EA1	30	COWL WIRE AND ENGINE ROOM MAIN WIRE (LEFT FENDER)
EA2		

▽ : GROUND POINTS

CODE	SEE PAGE	GROUND POINTS LOCATION
EA	30	FRONT SIDE OF RIGHT FENDER
EB	30	FRONT SIDE OF LEFT FENDER
ID	32	LEFT KICK PANEL

⬡ : SPLICE POINTS

CODE	SEE PAGE	WIRE HARNESS WITH SPLICE POINTS	CODE	SEE PAGE	WIRE HARNESS WITH SPLICE POINTS
E 2	30	ENGINE ROOM MAIN WIRE	**E 5**	30	ENGINE ROOM MAIN WIRE
E 3			**I 1**	34	COWL WIRE
E 4			**I 7**		

C13

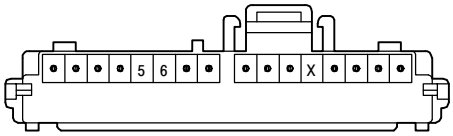

C14 BLACK

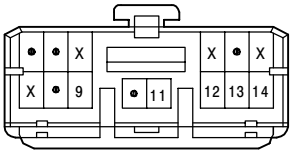

D 7 ORANGE

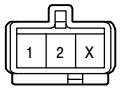

F 8

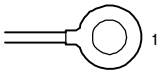

H 1, H 2 BLACK

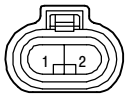

H 3, H 4 BROWN

J 7 BLUE

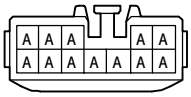

(HINT : SEE PAGE 7)

L 1

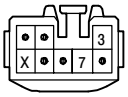

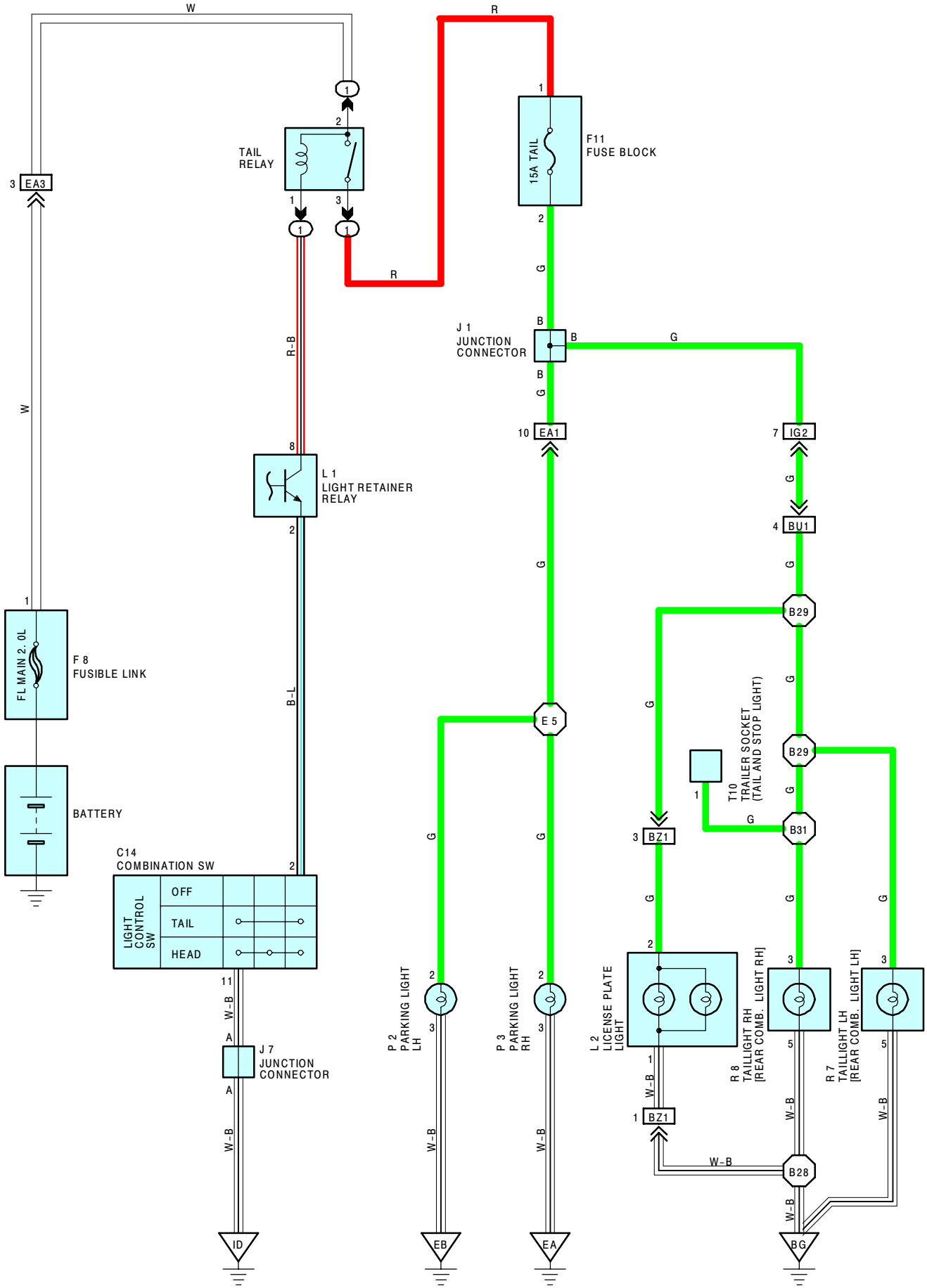
W
R
TAIL RELAY
15A TAIL
F11 FUSE BLOCK
3 EA3
R
G
J 1 JUNCTION CONNECTOR
R-B
W
10 EA1
7 IG2
L 1 LIGHT RETAINER RELAY
4 BU1
B29
FL MAIN 2.0L
F 8 FUSIBLE LINK
B-L
E 5
T10 TRAILER SOCKET (TAIL AND STOP LIGHT)
BATTERY
3 BZ1
B31
C14 COMBINATION SW
LIGHT CONTROL SW
OFF
TAIL
HEAD
W-B
J 7 JUNCTION CONNECTOR
P 2 PARKING LIGHT LH
P 3 PARKING LIGHT RH
L 2 LICENSE PLATE LIGHT
R 8 TAILLIGHT RH [REAR COMB. LIGHT RH]
R 7 TAILLIGHT LH [REAR COMB. LIGHT LH]
1 BZ1
B28
ID
EB
EA
BG

SERVICE HINTS

TAIL RELAY

(1) 2 – **(1)** 3 : CLOSED WITH THE LIGHT CONTROL SW AT **TAIL** OR **HEAD** POSITION (WHEN THE LIGHT AUTO TURN OFF SYSTEM DOES NOT OPERATE)

○ : PARTS LOCATION

CODE	SEE PAGE	CODE	SEE PAGE	CODE	SEE PAGE
C14	24	**J 7**	25	**P 3**	23
F 8	22	**L 1**	25	**R 7**	27
F11	25	**L 2**	26	**R 8**	27
J 1	25	**P 2**	23	**T10**	27

⬭ : RELAY BLOCKS

CODE	SEE PAGE	RELAY BLOCKS (RELAY BLOCK LOCATION)
1	20	R/B NO. 1 (LEFT KICK PANEL)

▭ : CONNECTOR JOINING WIRE HARNESS AND WIRE HARNESS

CODE	SEE PAGE	JOINING WIRE HARNESS AND WIRE HARNESS (CONNECTOR LOCATION)
EA1	30	COWL WIRE AND ENGINE ROOM MAIN WIRE (LEFT FENDER)
EA3		
IG2	32	COWL WIRE AND FLOOR WIRE (LEFT KICK PANEL)
BU1	36	FLOOR NO. 3 WIRE AND FLOOR WIRE (LEFT QUARTER PANEL INNER)
BZ1	38	LUGGAGE ROOM NO. 3 WIRE AND FLOOR NO. 3 WIRE (UNDER THE LOWER BACK PANEL)

▽ : GROUND POINTS

CODE	SEE PAGE	GROUND POINTS LOCATION
EA	30	FRONT SIDE OF RIGHT FENDER
EB	30	FRONT SIDE OF LEFT FENDER
ID	32	LEFT KICK PANEL
BG	36	LOWER BACK PANEL CENTER

⬡ : SPLICE POINTS

CODE	SEE PAGE	WIRE HARNESS WITH SPLICE POINTS	CODE	SEE PAGE	WIRE HARNESS WITH SPLICE POINTS
E 5	30	ENGINE ROOM MAIN WIRE	**B29**	38	FLOOR NO. 3 WIRE
B28	38	FLOOR NO. 3 WIRE	**B31**		

C14 BLACK

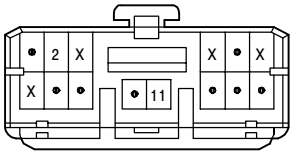

F 8

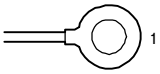

F11

(SEE PAGE 20)

J 1

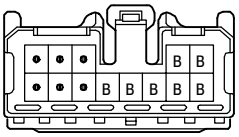

(HINT : SEE PAGE 7)

J 7 BLUE

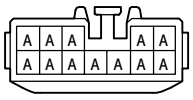

(HINT : SEE PAGE 7)

L 1

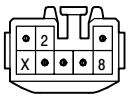

L 2

P 2, P 3 GRAY

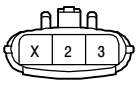

R 7, R 8

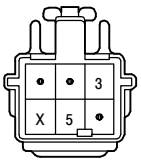

T10 BLACK

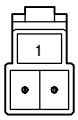

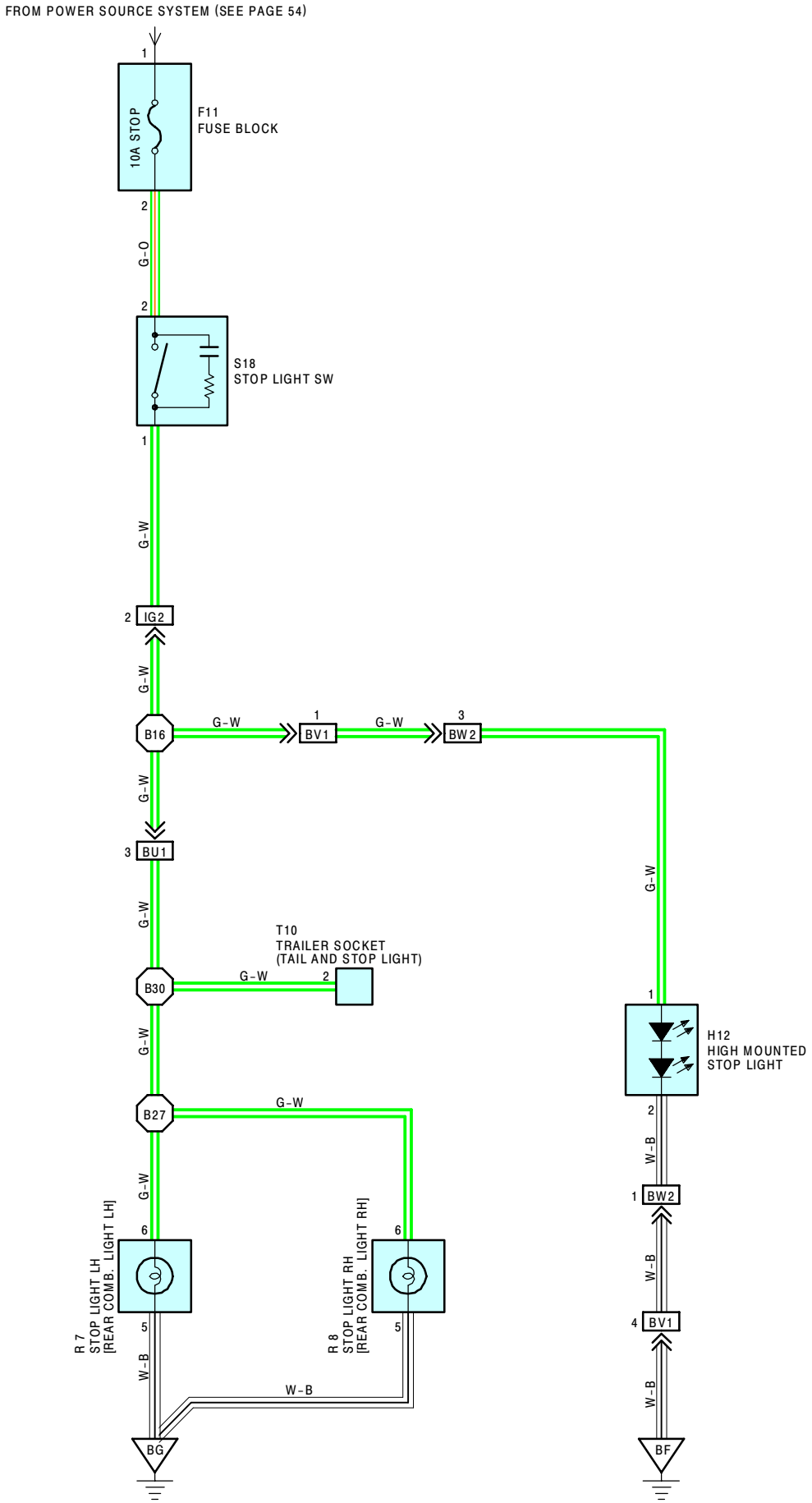
FROM POWER SOURCE SYSTEM (SEE PAGE 54)
F11
FUSE BLOCK
10A STOP
S18
STOP LIGHT SW
G-O
G-W
IG2
B16
BV1
BW2
BU1
B30
B27
T10
TRAILER SOCKET
(TAIL AND STOP LIGHT)
H12
HIGH MOUNTED
STOP LIGHT
W-B
R 7
STOP LIGHT LH
[REAR COMB. LIGHT LH]
R 8
STOP LIGHT RH
[REAR COMB. LIGHT RH]
BG
BF

SERVICE HINTS

S18 STOP LIGHT SW

2–1 : CLOSED WITH THE BRAKE PEDAL DEPRESSED

○ : PARTS LOCATION

CODE	SEE PAGE	CODE	SEE PAGE	CODE	SEE PAGE
F11	25	**R 7**	27	**S18**	25
H12	26	**R 8**	27	**T10**	27

▭ : CONNECTOR JOINING WIRE HARNESS AND WIRE HARNESS

CODE	SEE PAGE	JOINING WIRE HARNESS AND WIRE HARNESS (CONNECTOR LOCATION)
IG2	32	COWL WIRE AND FLOOR WIRE (LEFT KICK PANEL)
BU1	36	FLOOR NO. 3 WIRE AND FLOOR WIRE (LEFT QUARTER PANEL INNER)
BV1	36	LUGGAGE ROOM NO. 1 WIRE AND FLOOR WIRE (LEFT QUARTER PANEL INNER)
BW2	36	BACK DOOR NO. 1 WIRE AND LUGGAGE ROOM NO. 1 WIRE (LEFT REAR SIDE OF ROOF)

▽ : GROUND POINTS

CODE	SEE PAGE	GROUND POINTS LOCATION
BF	36	UNDER THE CENTER CONSOLE BOX
BG	36	LOWER BACK PANEL CENTER

⬡ : SPLICE POINTS

CODE	SEE PAGE	WIRE HARNESS WITH SPLICE POINTS	CODE	SEE PAGE	WIRE HARNESS WITH SPLICE POINTS
B16	38	FLOOR WIRE	**B30**	38	FLOOR NO. 3 WIRE
B27	38	FLOOR NO. 3 WIRE			

F11

(SEE PAGE 20)

H12

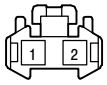

R 7, R 8

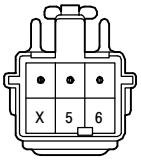

S18 BLACK

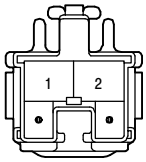

T10 BLACK

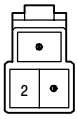

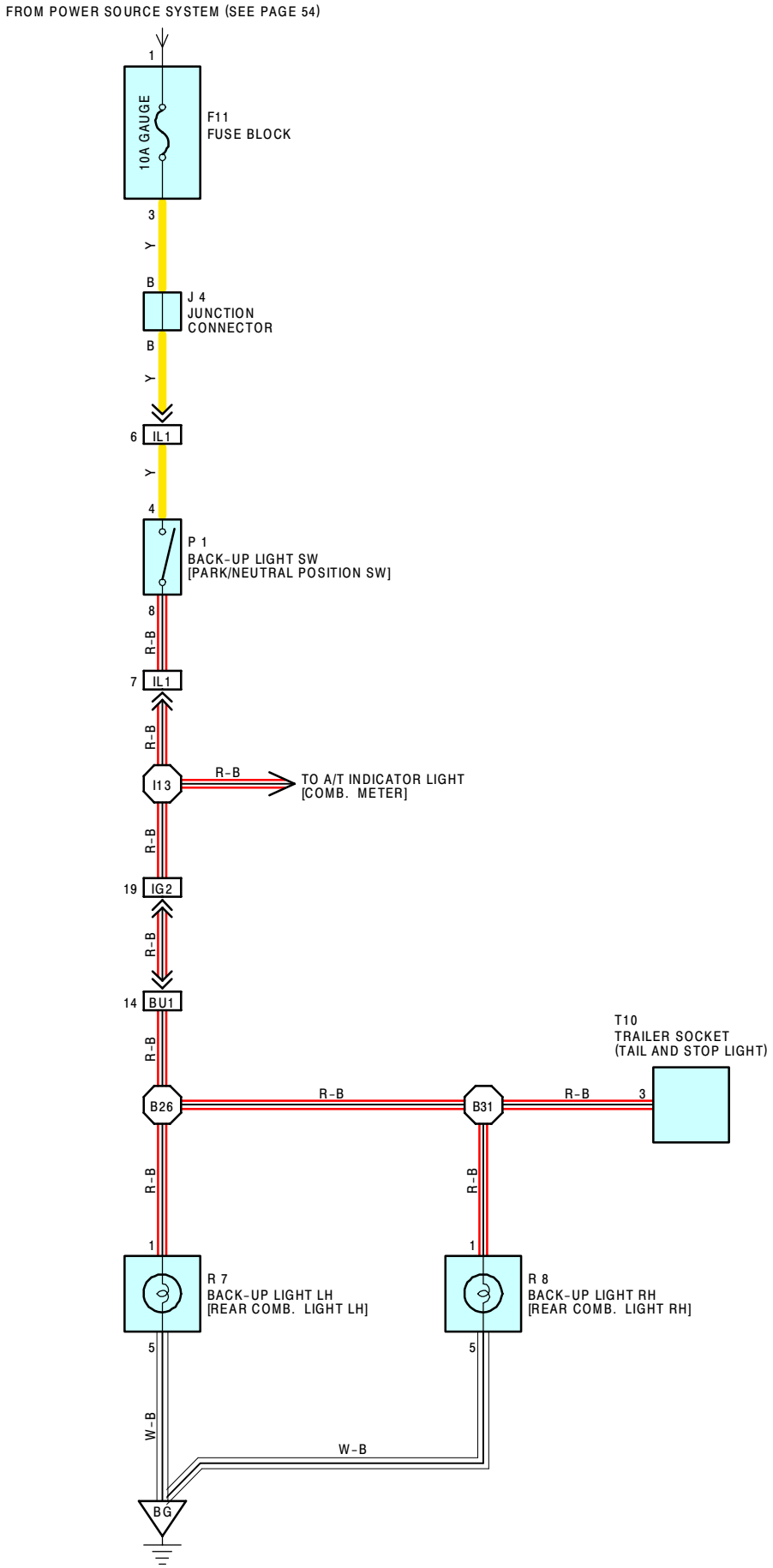
FROM POWER SOURCE SYSTEM (SEE PAGE 54)
1
10A GAUGE
F11
FUSE BLOCK
3
Y
B
J 4
JUNCTION
CONNECTOR
B
Y
6
IL1
Y
4
P 1
BACK-UP LIGHT SW
[PARK/NEUTRAL POSITION SW]
8
R-B
7
IL1
R-B
I13
R-B
TO A/T INDICATOR LIGHT
[COMB. METER]
R-B
19
IG2
R-B
14
BU1
R-B
T10
TRAILER SOCKET
(TAIL AND STOP LIGHT)
B26
R-B
B31
R-B
3
R-B
R-B
1
1
R 7
BACK-UP LIGHT LH
[REAR COMB. LIGHT LH]
R 8
BACK-UP LIGHT RH
[REAR COMB. LIGHT RH]
5
5
W-B
W-B
BG

SERVICE HINTS

P 1 BACK–UP LIGHT SW [PARK/NEUTRAL POSITION SW]
4–8 : CLOSED WITH THE SHIFT LEVER IN **R** POSITION

○ : PARTS LOCATION

CODE	SEE PAGE	CODE	SEE PAGE	CODE	SEE PAGE
F11	25	**P 1**	23	**R 8**	27
J 4	25	**R 7**	27	**T10**	27

▭ : CONNECTOR JOINING WIRE HARNESS AND WIRE HARNESS

CODE	SEE PAGE	JOINING WIRE HARNESS AND WIRE HARNESS (CONNECTOR LOCATION)
IG2	32	COWL WIRE AND FLOOR WIRE (LEFT KICK PANEL)
IL1	34	ENGINE WIRE AND COWL WIRE (BEHIND GLOVE BOX)
BU1	36	FLOOR NO. 3 WIRE AND FLOOR WIRE (LEFT QUARTER PANEL INNER)

▽ : GROUND POINTS

CODE	SEE PAGE	GROUND POINTS LOCATION
BG	36	LOWER BACK PANEL CENTER

⬡ : SPLICE POINTS

CODE	SEE PAGE	WIRE HARNESS WITH SPLICE POINTS	CODE	SEE PAGE	WIRE HARNESS WITH SPLICE POINTS
I13	34	COWL WIRE	**B31**	38	FLOOR NO. 3 WIRE
B26	38	FLOOR NO. 3 WIRE			

F11

(SEE PAGE 20)

J 4

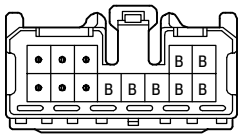

(HINT : SEE PAGE 7)

P 1 GRAY

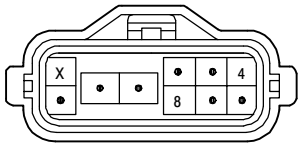

R 7, R 8

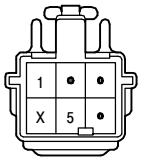

T10 BLACK

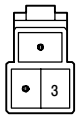

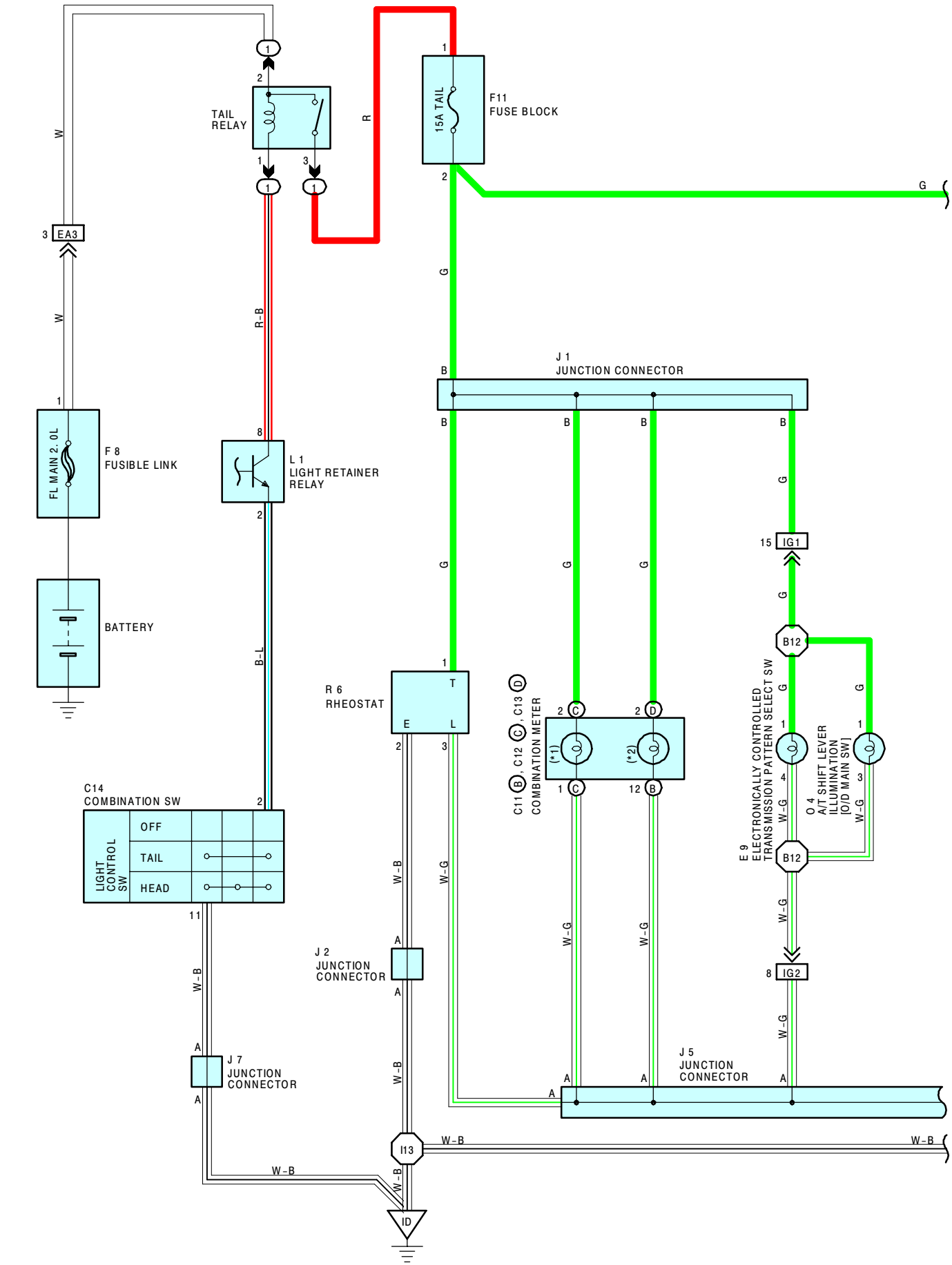
TAIL RELAY
F11 FUSE BLOCK
15A TAIL
EA3
F 8 FUSIBLE LINK
FL MAIN 2. 0L
BATTERY
L 1 LIGHT RETAINER RELAY
J 1 JUNCTION CONNECTOR
R 6 RHEOSTAT
C11 B, C12 C, C13 D
COMBINATION METER
(*1)
(*2)
IG1
IG2
B12
E 9 ELECTRONICALLY CONTROLLED TRANSMISSION PATTERN SELECT SW
O 4 A/T SHIFT LEVER ILLUMINATION [O/D MAIN SW]
C14 COMBINATION SW
LIGHT CONTROL SW
OFF
TAIL
HEAD
J 2 JUNCTION CONNECTOR
J 7 JUNCTION CONNECTOR
J 5 JUNCTION CONNECTOR
I13
ID

*1 : A/T INDICATOR ILLUMINATION
*2 : METER ILLUMINATION

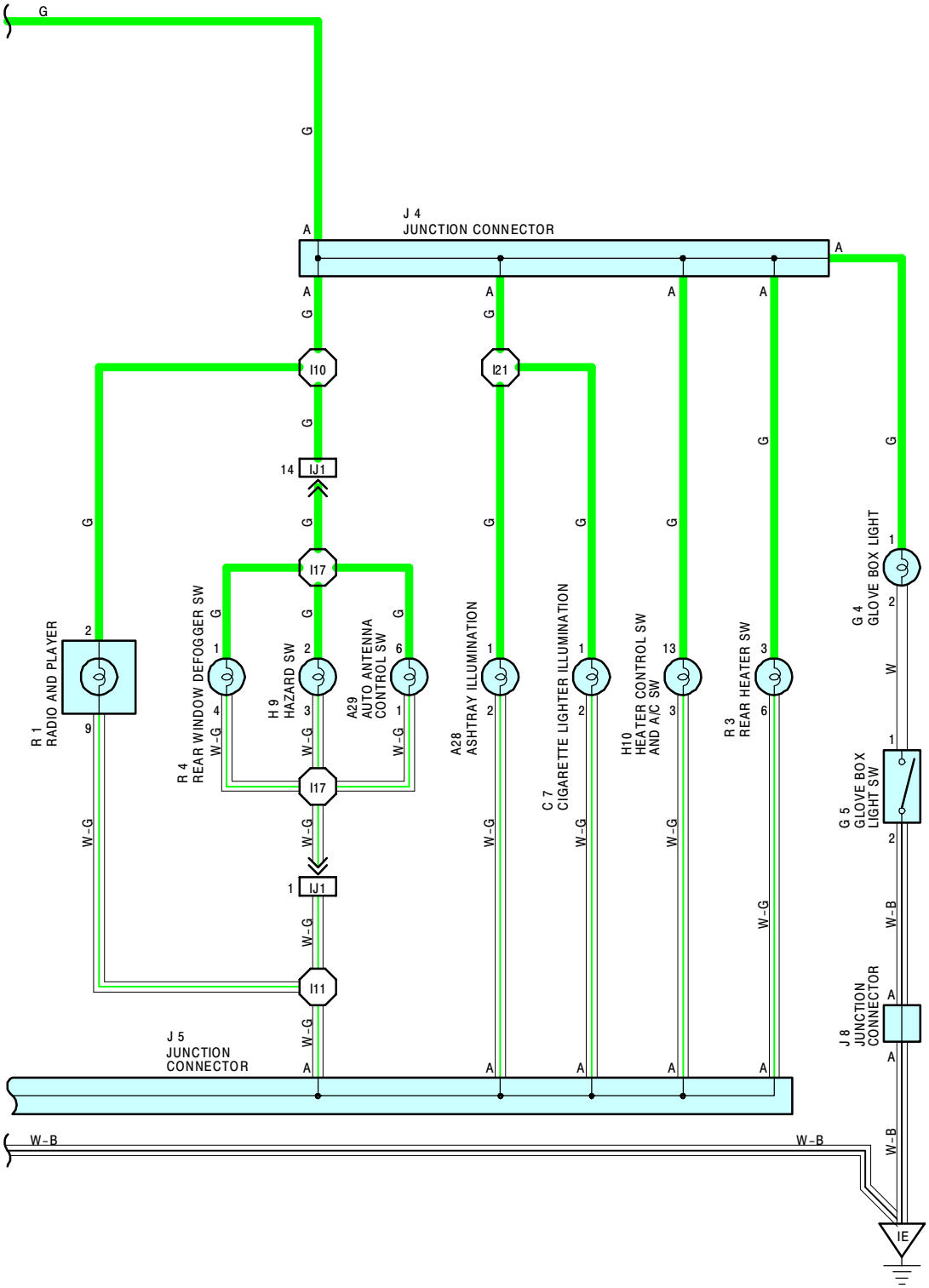

ILLUMINATION

SERVICE HINTS

TAIL RELAY

(1) 2 – **(1)** 3 : CLOSED WITH THE LIGHT CONTROL SW AT **TAIL** OR **HEAD** POSITION (WHEN THE LIGHT AUTO TURN OFF SYSTEM DOES NOT OPERATE)

R 6 RHEOSTAT

1–2 : APPROX. **12** VOLTS WITH THE RHEOSTAT FULLY TURNED COUNTERCLOCKWISE AND **0** VOLTS WITH IT FULLY TURNED CLOCKWISE

: PARTS LOCATION

CODE		SEE PAGE	CODE	SEE PAGE	CODE	SEE PAGE
A28		24	**F11**	25	**J 7**	25
A29		24	**G 4**	25	**J 8**	25
C 7		24	**G 5**	25	**L 1**	25
C11	B	24	**H 9**	25	**O 4**	27
C12	C	24	**H10**	25	**R 1**	25
C13	D	24	**J 1**	25	**R 3**	25
C14		24	**J 2**	25	**R 4**	25
E 9		26	**J 4**	25	**R 6**	25
F 8		22	**J 5**	25		

: RELAY BLOCKS

CODE	SEE PAGE	RELAY BLOCKS (RELAY BLOCK LOCATION)
1	20	R/B NO.1 (LEFT KICK PANEL)

: CONNECTOR JOINING WIRE HARNESS AND WIRE HARNESS

CODE	SEE PAGE	JOINING WIRE HARNESS AND WIRE HARNESS (CONNECTOR LOCATION)
EA3	30	COWL WIRE AND ENGINE ROOM MAIN WIRE (LEFT FENDER)
IG1	32	COWL WIRE AND FLOOR WIRE (LEFT KICK PANEL)
IG2		
IJ1	34	COWL WIRE AND INSTRUMENT PANEL WIRE (INSTRUMENT PANEL CENTER)

: GROUND POINTS

CODE	SEE PAGE	GROUND POINTS LOCATION
ID	32	LEFT KICK PANEL
IE	32	RIGHT KICK PANEL

: SPLICE POINTS

CODE	SEE PAGE	WIRE HARNESS WITH SPLICE POINTS	CODE	SEE PAGE	WIRE HARNESS WITH SPLICE POINTS
I10	34	COWL WIRE	**I17**	34	INSTRUMENT PANEL WIRE
I11			**I21**	34	COWL WIRE
I13			**B12**	38	FLOOR WIRE

A28

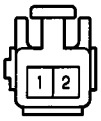

A29 BLACK

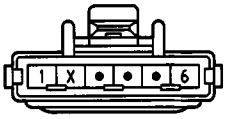

C 7 GRAY

C11 (B) BLUE

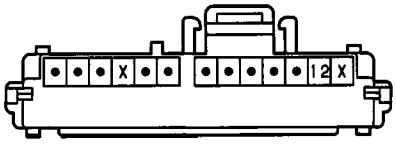

C12 (C) BROWN

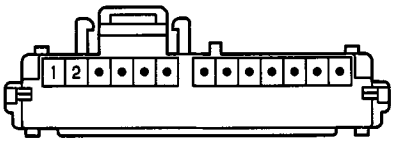

C13 (D)

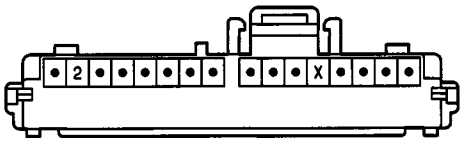

C14 BLACK

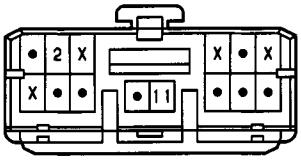

E 9

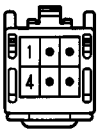

F 8

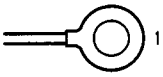

F11

(SEE PAGE 20)

G 4 GRAY

G 5

H 9 BLACK

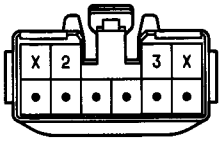

H10

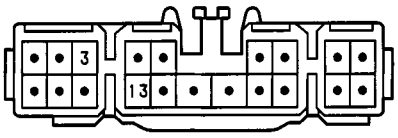

J 1

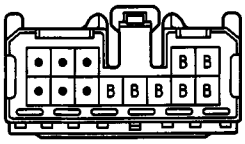

(HINT:SEE PAGE 7)

J 2 BLUE

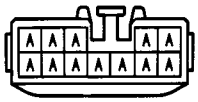

(HINT:SEE PAGE 7)

J 4

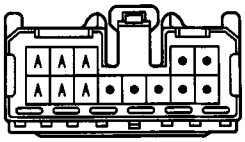

(HINT:SEE PAGE 7)

J 5 BLUE

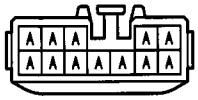

(HINT:SEE PAGE 7)

J 7 BLUE

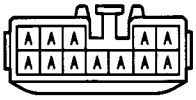

(HINT:SEE PAGE 7)

J 8 BLUE

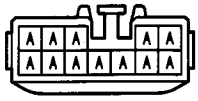

(HINT:SEE PAGE 7)

L 1

O 4 BLUE

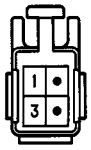

R 1

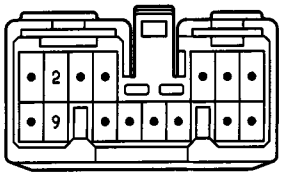

R 3 BLACK

R 4 BLACK

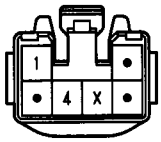

R 6

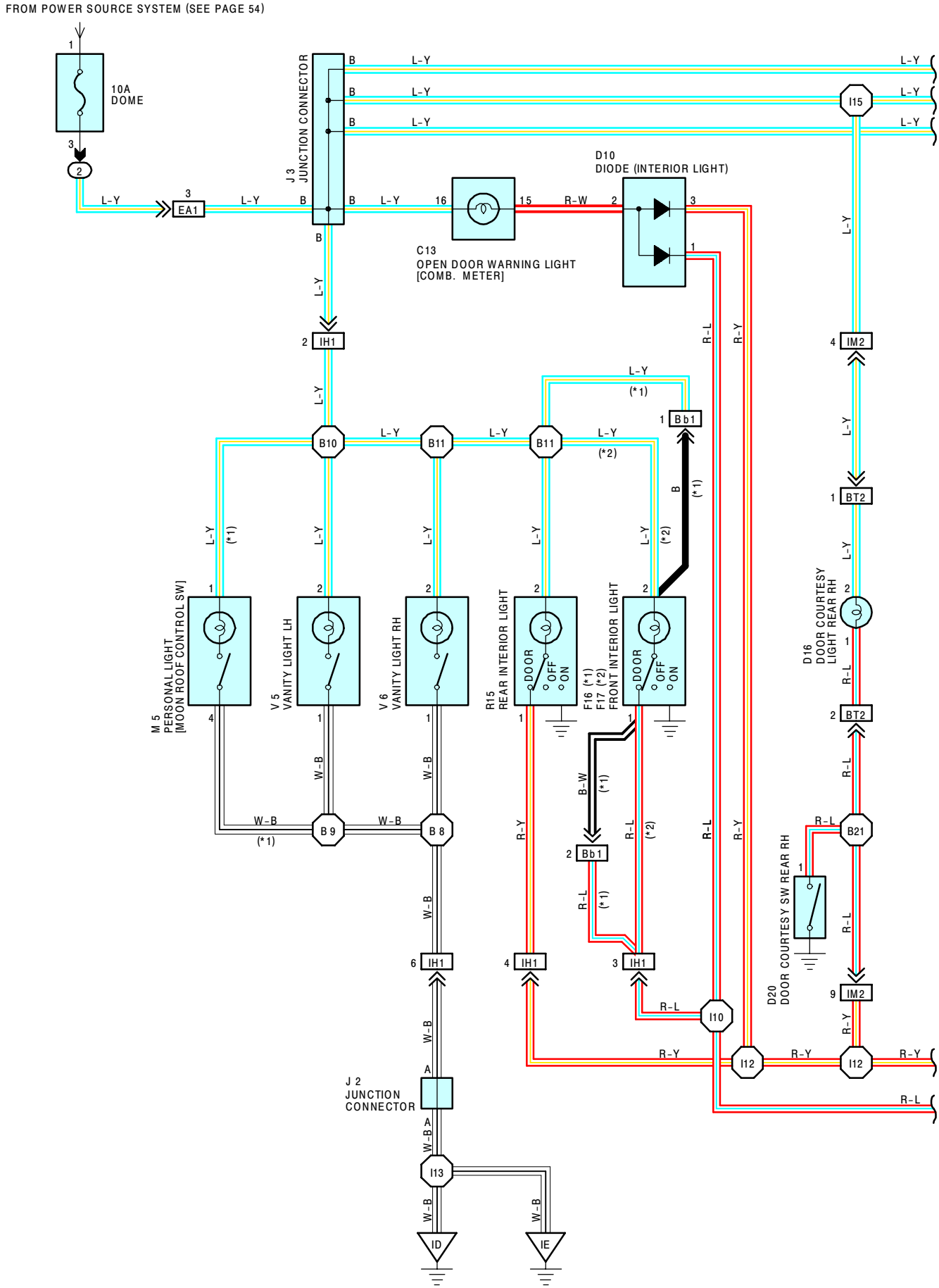
FROM POWER SOURCE SYSTEM (SEE PAGE 54)
10A
DOME
J 3
JUNCTION CONNECTOR
EA1
D10
DIODE (INTERIOR LIGHT)
C13
OPEN DOOR WARNING LIGHT
[COMB. METER]
I15
IH1
IM2
B10
B11
Bb1
BT2
M 5
PERSONAL LIGHT
[MOON ROOF CONTROL SW]
V 5
VANITY LIGHT LH
V 6
VANITY LIGHT RH
R15
REAR INTERIOR LIGHT
F16 (*1)
F17 (*2)
FRONT INTERIOR LIGHT
DOOR
OFF
ON
D16
DOOR COURTESY
LIGHT REAR RH
B 9
B 8
B21
D20
DOOR COURTESY SW REAR RH
I10
I12
J 2
JUNCTION
CONNECTOR
I13
ID
IE
L-Y
R-W
R-L
R-Y
W-B
B-W
(*1)
(*2)

*1 : W/ MOON ROOF
*2 : W/O MOON ROOF

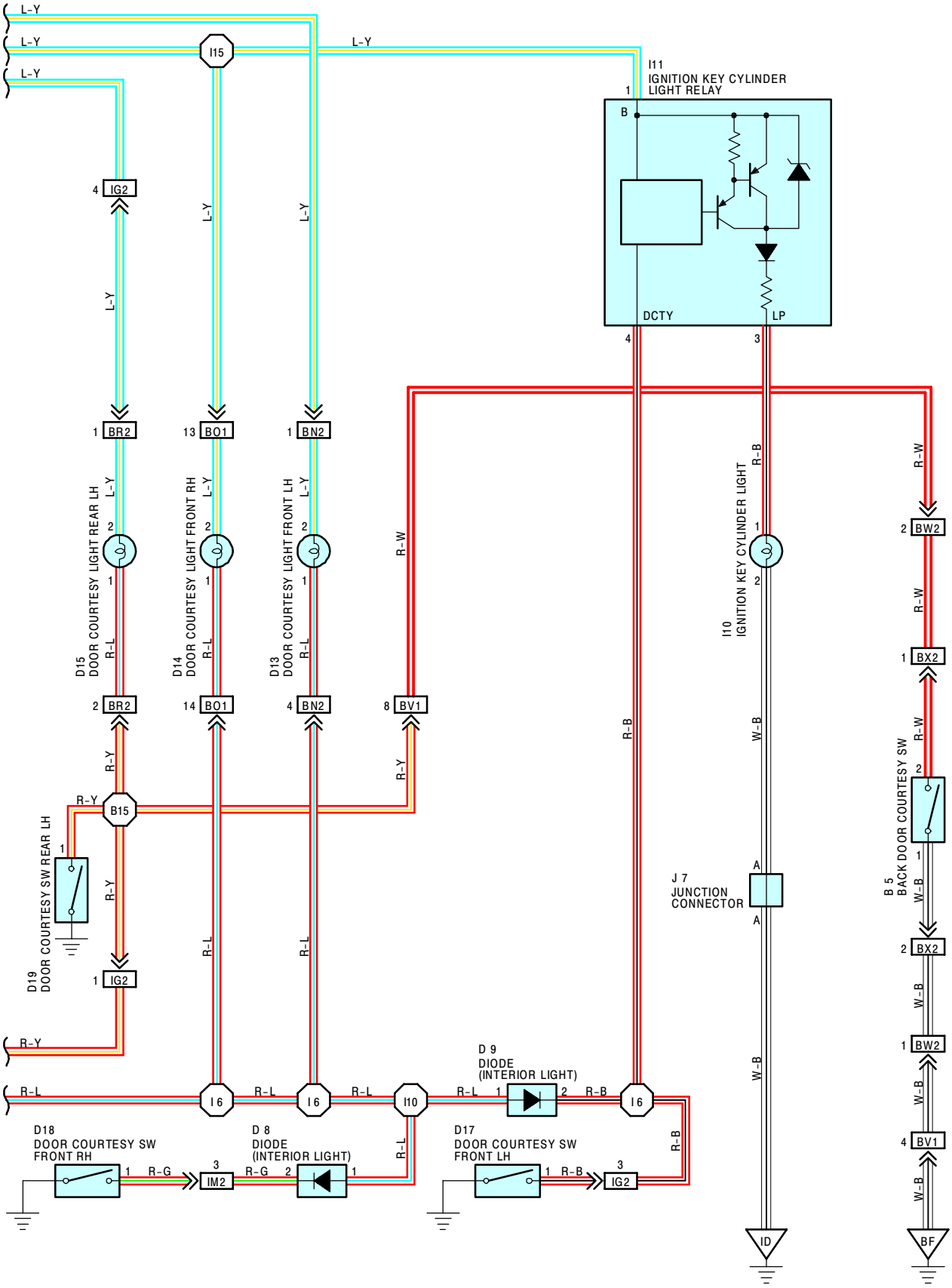

INTERIOR LIGHT

SERVICE HINTS

F16, F17 FRONT INTERIOR LIGHT
2–GROUND : ALWAYS APPOX. **12** VOLTS
2–1 : CLOSED WITH THE INTERIOR LIGHT POSITION SW AT **DOOR** POSITION
D17, D18, D19, D20 DOOR COURTESY SW FRONT LH, RH, REAR LH, RH
1–GROUND : CLOSED WITH EACH OF THE DOOR OPENED
B 5 BACK DOOR COURTESY SW
2–1 : CLOSED WITH THE BACK DOOR OPENED

: PARTS LOCATION

CODE	SEE PAGE	CODE	SEE PAGE	CODE	SEE PAGE
B 5	26	**D16**	26	**I11**	25
C13	24	**D17**	26	**J 2**	25
D 8	24	**D18**	26	**J 3**	25
D 9	24	**D19**	26	**J 7**	25
D10	24	**D20**	26	**M 5**	26
D13	26	**F16**	26	**R15**	25
D14	26	**F17**	26	**V 5**	27
D15	26	**I10**	25	**V 6**	27

: RELAY BLOCKS

CODE	SEE PAGE	RELAY BLOCKS (RELAY BLOCK LOCATION)
2	18	R/B NO. 2 (FRONT SIDE OF LEFT FENDER)

: CONNECTOR JOINING WIRE HARNESS AND WIRE HARNESS

CODE	SEE PAGE	JOINING WIRE HARNESS AND WIRE HARNESS (CONNECTOR LOCATION)
EA1	30	COWL WIRE AND ENGINE ROOM MAIN WIRE (LEFT FENDER)
IG2	32	COWL WIRE AND FLOOR WIRE (LEFT KICK PANEL
IH1	32	ROOF WIRE AND COWL WIRE (LEFT KICK PANEL)
IM2	34	COWL WIRE AND FLOOR NO. 2 WIRE (RIGHT KICK PANEL)
BN2	36	FRONT DOOR LH WIRE AND COWL WIRE (LEFT KICK PANEL)
BO1	36	FRONT DOOR RH WIRE AND COWL WIRE (RIGHT KICK PANEL)
BR2	36	REAR DOOR LH WIRE AND FLOOR WIRE (LEFT CENTER PILLAR)
BT2	36	REAR DOOR RH WIRE AND FLOOR NO. 2 WIRE (RIGHT CENTER PILLAR)
BV1	36	LUGGAGE ROOM NO. 1 WIRE AND FLOOR WIRE (LEFT QUARTER PANEL INNER)
BW2	36	BACK DOOR NO. 1 WIRE AND LUGGAGE ROOM NO. 1 WIRE (LEFT REAR SIDE OF ROOF)
BX2	38	BACK DOOR NO. 1 WIRE AND BACK DOOR NO. 2 WIRE (BACK DOOR LEFT)
Bb1	38	COWL WIRE AND FRAME WIRE (RIGHT FENDER)

: GROUND POINTS

CODE	SEE PAGE	GROUND POINTS LOCATION
ID	32	LEFT KICK PANEL
IE	32	RIGHT KICK PANEL
BF	36	UNDER THE CENTER CONSOLE BOX

: SPLICE POINTS

CODE	SEE PAGE	WIRE HARNESS WITH SPLICE POINTS	CODE	SEE PAGE	WIRE HARNESS WITH SPLICE POINTS
I 6	34	COWL WIRE	**B 9**	38	ROOF WIRE
I10			**B10**		
I12			**B11**		
I13			**B15**	38	FLOOR WIRE
I15			**B21**	38	FLOOR NO. 2 WIRE
B 8	38	ROOF WIRE			

B 5

C13

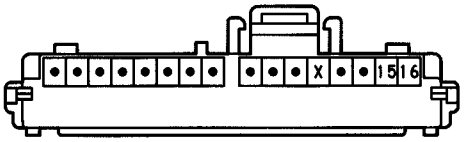

D 8, D 9 GRAY

D10

D13, D14, D15, D16

D17, D18, D19, D20 BLUE

F16, F17

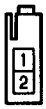

I10

I11

J 2 BLUE

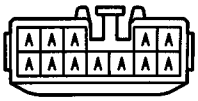

(HINT:SEE PAGE 7)

J 3

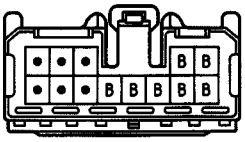

(HINT:SEE PAGE 7)

J 7 BLUE

(HINT:SEE PAGE 7)

M 5

V 5, V 6 BLUE

R15

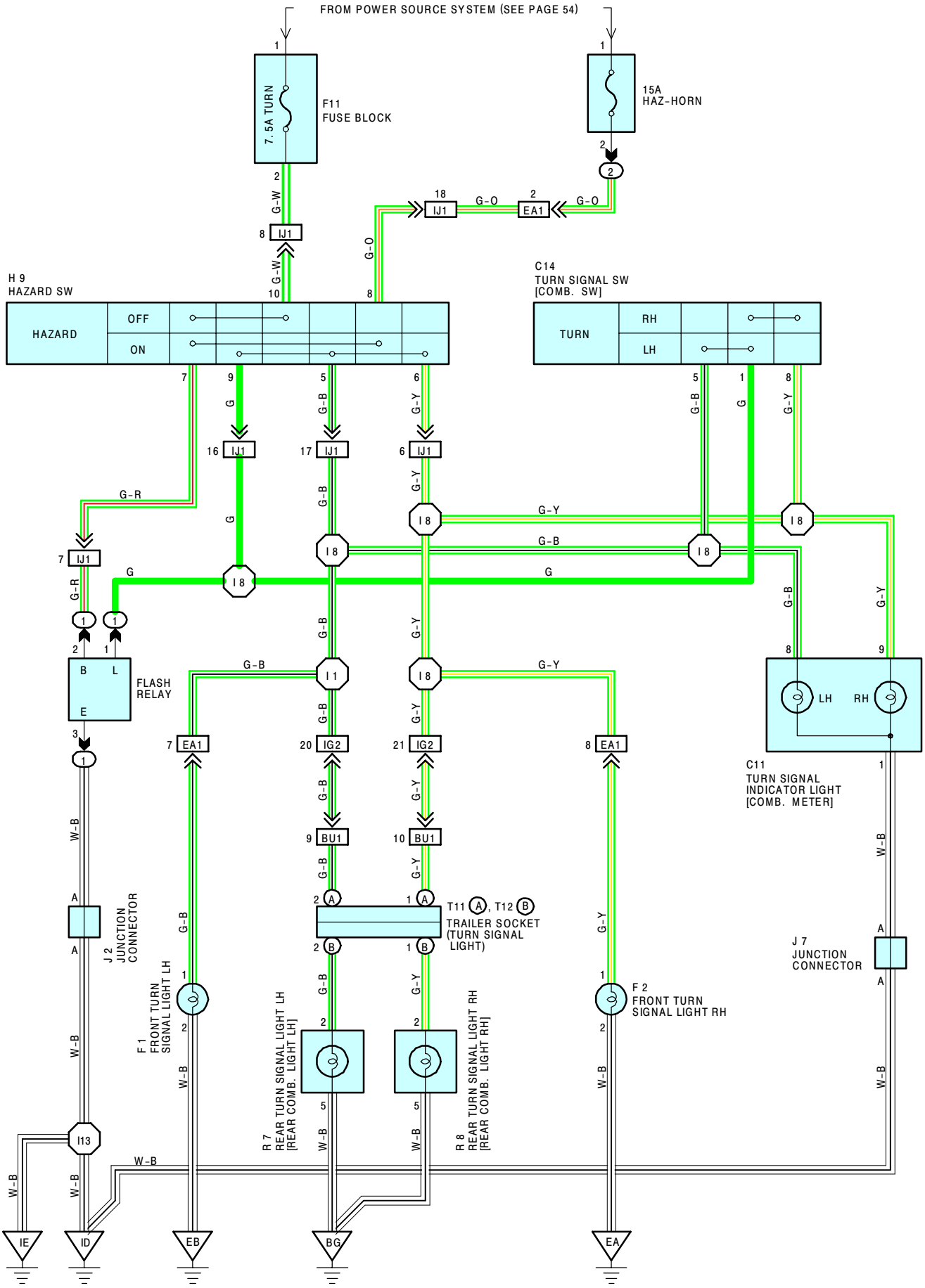
FROM POWER SOURCE SYSTEM (SEE PAGE 54)
7.5A TURN
F11
FUSE BLOCK
15A
HAZ-HORN
IJ1
EA1
H 9
HAZARD SW
HAZARD
OFF
ON
C14
TURN SIGNAL SW
[COMB. SW]
TURN
RH
LH
I8
I1
I13
FLASH
RELAY
B
L
E
IG2
BU1
C11
TURN SIGNAL
INDICATOR LIGHT
[COMB. METER]
LH
RH
J 2
JUNCTION
CONNECTOR
T11 A, T12 B
TRAILER SOCKET
(TURN SIGNAL
LIGHT)
J 7
JUNCTION
CONNECTOR
F 1
FRONT TURN
SIGNAL LIGHT LH
R 7
REAR TURN SIGNAL LIGHT LH
[REAR COMB. LIGHT LH]
R 8
REAR TURN SIGNAL LIGHT RH
[REAR COMB. LIGHT RH]
F 2
FRONT TURN
SIGNAL LIGHT RH
IE
ID
EB
BG
EA
G-W
G-O
G-R
G
G-B
G-Y
W-B

SERVICE HINTS

FLASH RELAY

(1) 2–GROUND : APPROX. **12** VOLTS WITH THE IGNITION SW ON OR THE HAZARD SW ON
(1) 1–GROUND : CHANGES FROM **12** TO **0** VOLTS WITH THE IGNITION SW ON AND THE TURN SIGNAL SW LEFT OR RIGHT POSITION, AND WITH THE HAZARD SW ON
(1) 3–GROUND : ALWAYS CONTINUITY

: PARTS LOCATION

CODE	SEE PAGE	CODE	SEE PAGE	CODE		SEE PAGE
C11	24	**F11**	25	**R 7**		27
C14	24	**H 9**	25	**R 8**		27
F 1	22	**J 2**	25	**T11**	A	27
F 2	22	**J 7**	25	**T12**	B	27

: RELAY BLOCKS

CODE	SEE PAGE	RELAY BLOCKS (RELAY BLOCK LOCATION)
1	20	R/B NO. 1 (LEFT KICK PANEL)
2	18	R/B NO. 2 (FRONT SIDE OF LEFT FENDER)

: CONNECTOR JOINING WIRE HARNESS AND WIRE HARNESS

CODE	SEE PAGE	JOINING WIRE HARNESS AND WIRE HARNESS (CONNECTOR LOCATION)
EA1	30	COWL WIRE AND ENGINE ROOM MAIN WIRE (LEFT FENDER)
IG2	32	COWL WIRE AND FLOOR WIRE (LEFT KICK PANEL)
IJ1	34	COWL WIRE AND INSTRUMENT PANEL WIRE (INSTRUMENT PANEL CENTER)
BU1	36	FLOOR NO. 3 WIRE AND FLOOR WIRE (LEFT QUARTER PANEL INNER)

: GROUND POINTS

CODE	SEE PAGE	GROUND POINTS LOCATION
EA	30	FRONT SIDE OF RIGHT FENDER
EB	30	FRONT SIDE OF LEFT FENDER
ID	32	LEFT KICK PANEL
IE	32	RIGHT KICK PANEL
BG	36	LOWER BACK PANEL CENTER

: SPLICE POINTS

CODE	SEE PAGE	WIRE HARNESS WITH SPLICE POINTS	CODE	SEE PAGE	WIRE HARNESS WITH SPLICE POINTS
I 1	34	COWL WIRE	**I13**	34	COWL WIRE
I 8					

C11 BLUE

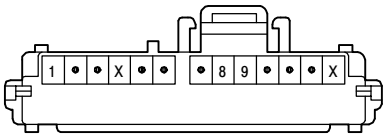

C14 BLACK

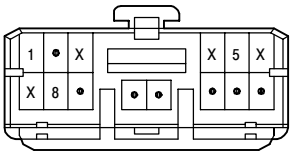

F 1, F 2 GRAY

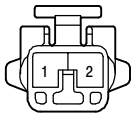

F11

(SEE PAGE 20)

H 9 BLACK

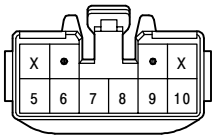

J 2 BLUE

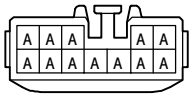

(HINT : SEE PAGE 7)

J 7 BLUE

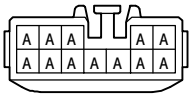

(HINT : SEE PAGE 7)

R 7, R 8

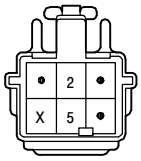

T11 (A) BLACK

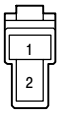

T12 (B) BLACK

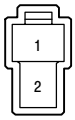

HORN

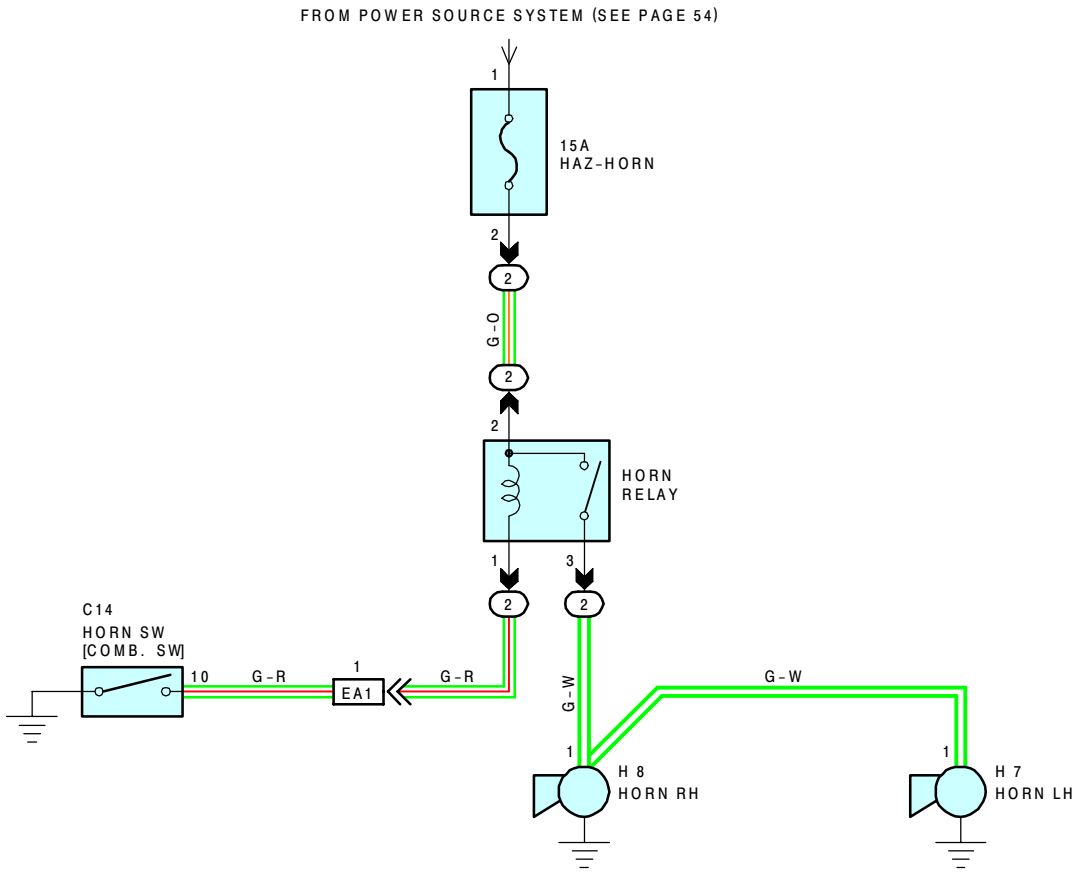

SERVICE HINTS

HORN RELAY

(2) 2 – **(2)** 3 : CLOSED WITH THE HORN SW ON

: PARTS LOCATION

CODE	SEE PAGE	CODE	SEE PAGE	CODE	SEE PAGE
C14	24	**H 7**	22	**H 8**	22

: RELAY BLOCKS

CODE	SEE PAGE	RELAY BLOCKS (RELAY BLOCK LOCATION)
2	18	R/B NO. 2 (FRONT SIDE OF LEFT FENDER)

: CONNECTOR JOINING WIRE HARNESS AND WIRE HARNESS

CODE	SEE PAGE	JOINING WIRE HARNESS AND WIRE HARNESS (CONNECTOR LOCATION)
EA1	30	COWL WIRE AND ENGINE ROOM MAIN WIRE (LEFT FENDER)

C14 BLACK

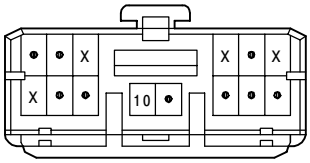

H 7, H 8 BLACK

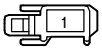

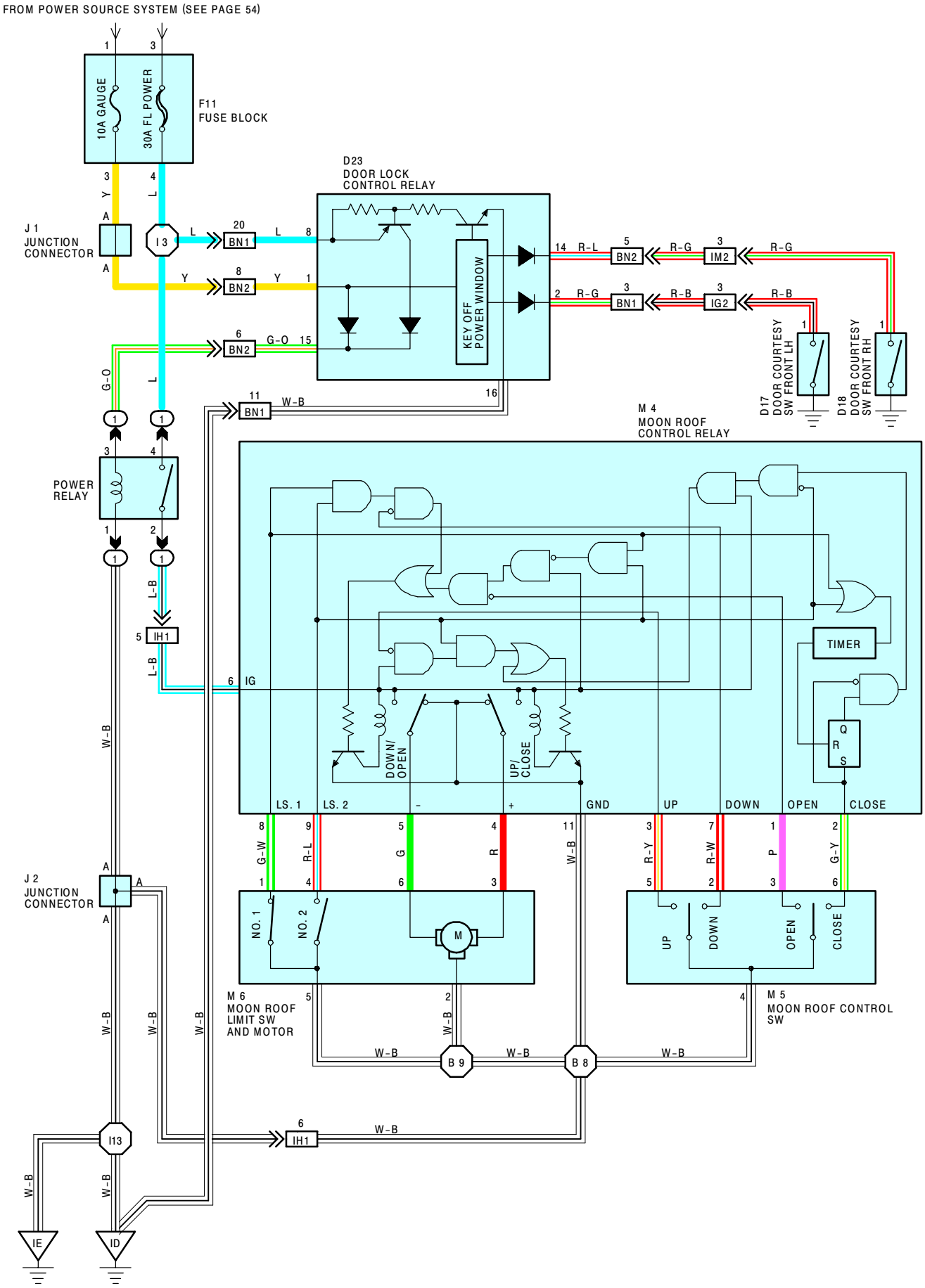
FROM POWER SOURCE SYSTEM (SEE PAGE 54)
10A GAUGE
30A FL POWER
F11
FUSE BLOCK
D23
DOOR LOCK
CONTROL RELAY
KEY OFF
POWER WINDOW
J 1
JUNCTION
CONNECTOR
I 3
BN1
BN2
IM2
IG2
D17
DOOR COURTESY
SW FRONT LH
D18
DOOR COURTESY
SW FRONT RH
M 4
MOON ROOF
CONTROL RELAY
POWER
RELAY
IH1
IG
TIMER
DOWN/
OPEN
UP/
CLOSE
LS. 1
LS. 2
GND
UP
DOWN
OPEN
CLOSE
J 2
JUNCTION
CONNECTOR
NO. 1
NO. 2
M
M 6
MOON ROOF
LIMIT SW
AND MOTOR
M 5
MOON ROOF CONTROL
SW
B 9
B 8
I13
IE
ID

SYSTEM OUTLINE

CURRENT IS APPLIED AT ALL TIMES THROUGH THE **FL POWER** FUSE TO **TERMINAL 4** OF THE POWER RELAY.

WITH THE IGNITION SW TURNED ON, THE CURRENT FLOWS FROM **TERMINAL 3** OF THE POWER RELAY TO **TERMINAL 1** → **GROUND** THROUGH THE **GAUGE** FUSE. AS A RESULT, THE POWER RELAY IS ACTIVATED AND THE CURRENT TO **TERMINAL 4** OF THE POWER RELAY FLOWS FROM **TERMINAL 2** OF THE RELAY TO **TERMINAL 6** OF THE MOON ROOF CONTROL RELAY.

1. SLIDE OPEN OPERATION

WHEN THE IGNITION SW IS TURNED ON AND THE MOON ROOF CONTROL SW IS PUSHED TO THE **OPEN** POSITION, A SIGNAL IS INPUT FROM **TERMINAL 3** OF THE MOON ROOF CONTROL SW TO **TERMINAL 1** OF THE MOON ROOF CONTROL RELAY. THE MOON ROOF LIMIT SW NO. 2 IS TURNED ON AT THIS TIME.

WHEN THIS OCCURS, THE RELAY IS ACTIVATED AND THE CURRENT TO **TERMINAL 6** OF THE MOON ROOF CONTROL RELAY FLOWS FROM **TERMINAL 5** TO **TERMINAL 6** OF THE MOON ROOF MOTOR → **TERMINAL 3** → **TERMINAL 4** OF THE MOON ROOF CONTROL RELAY → **TERMINAL 11** → **GROUND,** ROTATING THE MOTOR TO OPEN THE MOON ROOF WHILE THE SW IS BEING PUSHED TO **OPEN** POSITION.

2. SLIDE CLOSE OPERATION

WITH THE IGNITION SW TURNED ON, THE MOON ROOF COMPLETELY OPENED AND THE MOON ROOF LIMIT SWITCH NO. 1 AND NO. 2 BOTH ARE ON, WHEN THE MOON ROOF CONTROL SW IS PUSHED TO THE **CLOSE** POSITION, A SIGNAL IS INPUT FROM **TERMINAL 6** OF THE MOON ROOF CONTROL SW TO **TERMINAL 2** OF THE MOON ROOF CONTROL RELAY.

WHEN THIS OCCURS, THE RELAY IS ACTIVATED AND THE CURRENT TO **TERMINAL 6** OF THE MOON ROOF CONTROL RELAY FLOWS FROM **TERMINAL 4** TO **TERMINAL 3** OF THE MOON ROOF MOTOR → **TERMINAL 6** → **TERMINAL 5** OF THE MOON ROOF CONTROL RELAY → **TERMINAL 11** → **GROUND**, ROTATING THE MOTOR TO CLOSE THE MOON ROOF WHILE THE SW IS BEING PUSHED TO **CLOSE** POSITION.

WHEN THE MOON ROOF LIMIT SW NO. 1 IS TURNED OFF (THE MOON ROOF LIMIT SW NO. 2 IS ON) AND MOON ROOF REACHES **100** MM FROM FULLY **CLOSE** POSITION, SIGNAL IS INPUT FROM **TERMINAL 1** OF THE LIMIT SW NO. 1 TO **TERMINAL 8** OF THE MOON ROOF CONTROL RELAY. THIS SIGNAL ACTIVATES THE RELAY AND STOPS CONTINUITY FROM **TERMINAL 6** OF THE MOON ROOF CONTROL RELAY TO **TERMINAL 11**, AS A RESULT, THE MOON ROOF STOPS AT THIS POSITION.

TO CLOSE THE MOON ROOF COMPLETELY, PUSHING THE MOON ROOF CONTROL SW AGAIN TO THE CLOSE SIDE CAUSES A SIGNAL TO BE INPUT AGAIN TO **TERMINAL 2** OF THE MOON ROOF CONTROL RELAY. THIS ACTIVATES THE RELAY AND THE MOON ROOF WILL CLOSE AS LONG AS THE MOON ROOF CONTROL SW IS BEING PUSHED, ALLOWING THE MOON ROOF TO FULLY CLOSE.

3. TILT UP OPERATION

WHEN THE MOON ROOF CONTROL SW IS PUSHED TO **TILT UP** POSITION, WITH THE IGNITION SW TURNED ON AND THE MOON ROOF COMPLETELY CLOSED (MOON ROOF LIMIT SW NO. 2 IS OFF), A SIGNAL IS INPUT FROM **TERMINAL 5** OF THE MOON ROOF CONTROL SW TO **TERMINAL 3** OF THE MOON ROOF CONTROL RELAY. AS A RESULT, THE RELAY IS ACTIVATED AND THE CURRENT TO **TERMINAL 6** OF THE RELAY FLOWS FROM **TERMINAL 4** OF THE RELAY TO **TERMINAL 3** OF THE MOON ROOF MOTOR → **TERMINAL 6** → **TERMINAL 5** OF THE RELAY → **TERMINAL 11** → **GROUND**, ROTATING THE MOTOR SO THAT TILT UP OPERATION OCCURS AS LONG AS THE MOON ROOF CONTROL SW IS PUSHED ON THE TILT UP SIDE.

4. TILT DOWN OPERATION

WHEN THE MOON ROOF CONTROL SW IS PUSHED TO **TILT DOWN** POSITION, WITH THE IGNITION SW TURNED ON AND THE MOON ROOF TILTED UP (THE MOON ROOF LIMIT SW NO. 1 AND NO. 2 ARE BOTH OFF), A SIGNAL IS INPUT FROM **TERMINAL 2** OF THE MOON ROOF CONTROL SW TO **TERMINAL 7** OF THE MOON ROOF CONTROL RELAY.

AS A RESULT, THE RELAY IS ACTIVATED AND THE CURRENT TO **TERMINAL 6** OF THE RELAY FLOWS FROM **TERMINAL 5** OF THE RELAY TO **TERMINAL 6** OF THE MOON ROOF MOTOR → **TERMINAL 3** → **TERMINAL 4** OF THE RELAY → **TERMINAL 11**→ **GROUND**, ROTATING THE MOTOR SO THAT TILT DOWN OPERATION OCCURS AS LONG AS THE MOON ROOF CONTROL SW IS PUSHED ON THE TILT DOWN SIDE. (DURING TILT DOWN, THE LIMIT SW NO. 1 IS CHANGED OFF TO ON.)

5. TILT UP REMINDER SYSTEM

WHEN THE IGNITION SW IS TURNED FROM ON TO ACC OR OFF, WITH THE MOON ROOF STILL TILTED UP, THE CURRENT DOES NOT FLOW TO **TERMINAL 6** OF THE MOON ROOF CONTROL RELAY.

THIS IS RECEIVED BY THE RELAY AS A SIGNAL THAT THE IGNITION SW IS TURNED OFF. AT THIS TIME, THE MOON ROOF LIMIT SW NO. 1 AND NO. 2 ARE OFF, SO SIGNALS ARE INPUT TO **TERMINALS 8** AND **9** OF THE MOON ROOF CONTROL RELAY THAT THE MOON ROOF IS IN THE TILT OPERATION POSITION. WHEN THESE SIGNALS ARE INPUT TO THE MOON ROOF CONTROL RELAY, THE TIMER BUILT INTO THE RELAY OPERATES.

6. KEY OFF MOON ROOF OPERATION

WITH THE IGNITION SW TURNED FROM ON TO OFF, THE DOOR LOCK CONTROL RELAY OPERATES AND CURRENT FLOWS FROM THE **FL POWER** FUSE TO **TERMINAL 8** OF THE DOOR LOCK CONTROL RELAY → **TERMINAL 15** → **TERMINAL 3** OF THE POWER RELAY → **TERMINAL 1** → **GROUND**, AT THIS TIME, FOR ABOUT **60** SECONDS THE SAME AS NORMAL OPERATION, CURRENT FLOWS FROM **POWER** FUSE → **TERMINAL 4** OF THE POWER RELAY → **TERMINAL 2** → **TERMINAL 6** OF THE MOON ROOF CONTROL RELAY. AS A RESULT, FOR ABOUT **60** SECONDS AFTER THE IGNITION SW IS TURNED OFF, THE FUNCTION OF THIS RELAY MAKES IT POSSIBLE TO OPEN AND CLOSE THE MOON ROOF. ALSO, BY OPENING THE FRONT DOOR (THE DOOR COURTESY SW ON) WITHIN ABOUT **60** SECONDS AFTER TURNING THE IGNITION SW TO OFF, A SIGNAL IS INPUT TO **TERMINAL 2** OR **14** OF THE DOOR LOCK CONTROL RELAY. AS A RESULT, THE RELAY TURNS OFF, AND OPEN AND CLOSE MOVEMENT OF THE MOON ROOF STOPS.

SERVICE HINTS

POWER RELAY

(1) 4 – **(1)** 2 : CLOSED WITH THE IGNITION SW AT **ON** POSITION OR KEY OFF OPERATED

M 4 MOON ROOF CONTROL RELAY

11–GROUND : ALWAYS CONTINUITY

6–GROUND : APPROX. **12** VOLTS WITH THE IGNITION SW AT **ON** POSITION OR KEY OFF OPERATED

4–GROUND : APPROX. **12** VOLTS WITH THE IGNITION SW ON AND THE MOON ROOF CONTROL SW AT **CLOSE** OR **UP** POSITION (EXCEPT APPROX. **100** MM (**3.941** IN.) **2** SECONDS IN THE BEFORE **CLOSED** POSITION)

5–GROUND : APPROX. **12** VOLTS WITH THE IGNITION SW ON AND THE MOON ROOF CONTROL SW AT **OPEN** OR **DOWN** POSITION

9–GROUND : APPROX. **12** VOLTS → **0** VOLTS FROM OPEN TO CLOSE
0 VOLTS WITH **UP** OR **DOWN** POSITION
0 VOLTS → APPROX**. 12** VOLTS WITH APPROX**.100** MM (**3.941** IN**.**) **2** SECONDS IN THE BEFORE **CLOSED** POSITION

8–GROUND : **0** VOLTS → APPROX. **12** VOLTS FROM **UP** TO **DOWN** POSITION

M 5 MOON ROOF CONTROL SW

5–4 : CLOSED WITH THE MOON ROOF CONTROL SW AT **UP** POSITION
6–4 : CLOSED WITH THE MOON ROOF CONTROL SW AT **CLOSE** POSITION
2–4 : CLOSED WITH THE MOON ROOF CONTROL SW AT **DOWN** POSITION
3–4 : CLOSED WITH THE MOON ROOF CONTROL SW AT **OPEN** POSITION
4–GROUND : ALWAYS CONTINUITY

: PARTS LOCATION

CODE	SEE PAGE	CODE	SEE PAGE	CODE	SEE PAGE
D17	26	**J 1**	25	**M 5**	26
D18	26	**J 2**	25	**M 6**	26
D23	26	**M 4**	26		

: RELAY BLOCKS

CODE	SEE PAGE	RELAY BLOCKS (RELAY BLOCK LOCATION)
1	20	R/B NO. 1 (LEFT KICK PANEL)

: CONNECTOR JOINING WIRE HARNESS AND WIRE HARNESS

CODE	SEE PAGE	JOINING WIRE HARNESS AND WIRE HARNESS (CONNECTOR LOCATION)
IG2	32	COWL WIRE AND FLOOR WIRE (LEFT KICK PANEL)
IH1	32	ROOF WIRE AND COWL WIRE (LEFT KICK PANEL)
IM2	34	COWL WIRE AND FLOOR NO. 2 WIRE (RIGHT KICK PANEL)
BN1	36	FRONT DOOR LH WIRE AND COWL WIRE (LEFT KICK PANEL)
BN2		

: GROUND POINTS

CODE	SEE PAGE	GROUND POINTS LOCATION
ID	32	LEFT KICK PANEL
IE	32	RIGHT KICK PANEL

: SPLICE POINTS

CODE	SEE PAGE	WIRE HARNESS WITH SPLICE POINTS	CODE	SEE PAGE	WIRE HARNESS WITH SPLICE POINTS
I 3	34	COWL WIRE	**B 8**	38	ROOF WIRE
I13			**B 9**		

D17, D18 BLUE

D23 GRAY

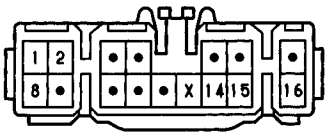

F11

(SEE PAGE 20)

J 1

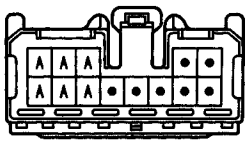

(HINT:SEE PAGE 7)

J 2 BLUE

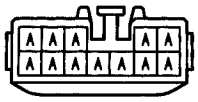

(HINT:SEE PAGE 7)

M 4

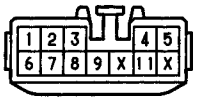

M 5

M 6

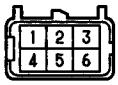

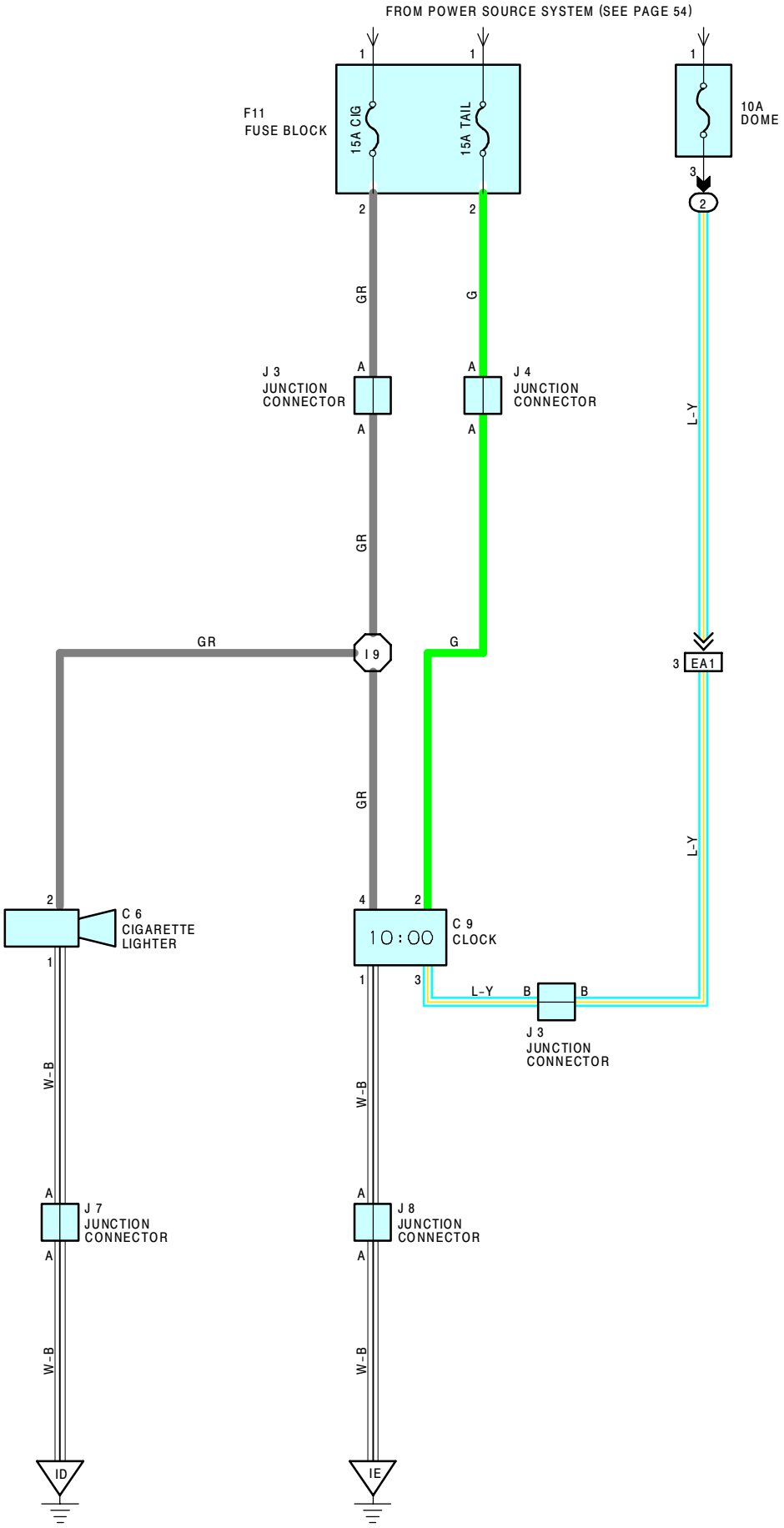
FROM POWER SOURCE SYSTEM (SEE PAGE 54)
F11
FUSE BLOCK
15A CIG
15A TAIL
10A
DOME
GR
G
J 3
JUNCTION
CONNECTOR
J 4
JUNCTION
CONNECTOR
L-Y
I 9
EA1
C 6
CIGARETTE
LIGHTER
C 9
CLOCK
10:00
J 3
JUNCTION
CONNECTOR
W-B
J 7
JUNCTION
CONNECTOR
J 8
JUNCTION
CONNECTOR
ID
IE

SERVICE HINTS

C 6 CIGARETTE LIGHTER
2–GROUND : APPROX. **12** VOLTS WITH THE IGNITION SW AT **ACC** OR **ON** POSITION
1–GROUND : ALWAYS CONTINUITY

C 9 CLOCK
3–GROUND : ALWAYS APPROX. **12** VOLTS (POWER FOR CLOCK)
4–GROUND : APPROX. **12** VOLTS WITH THE IGNITION SW AT **ACC** OR **ON** POSITION (POWER FOR INDICATION)
2–GROUND : APPROX **12** VOLTS WITH THE LIGHT CONTROL SW AT **TAIL** OR **HEAD** POSITION
1–GROUND : ALWAYS CONTINUITY

: PARTS LOCATION

CODE	SEE PAGE	CODE	SEE PAGE	CODE	SEE PAGE
C 6	24	**J 3**	25	**J 8**	25
C 9	24	**J 4**	25		
F11	25	**J 7**	25		

: RELAY BLOCKS

CODE	SEE PAGE	RELAY BLOCKS (RELAY BLOCK LOCATION)
2	18	R/B NO. 2 (FRONT SIDE OF LEFT FENDER)

: CONNECTOR JOINING WIRE HARNESS AND WIRE HARNESS

CODE	SEE PAGE	JOINING WIRE HARNESS AND WIRE HARNESS (CONNECTOR LOCATION)
EA1	30	COWL WIRE AND ENGINE ROOM MAIN WIRE (LEFT FENDER)

: GROUND POINTS

CODE	SEE PAGE	GROUND POINTS LOCATION
ID	32	LEFT KICK PANEL
IE	32	RIGHT KICK PANEL

: SPLICE POINTS

CODE	SEE PAGE	WIRE HARNESS WITH SPLICE POINTS	CODE	SEE PAGE	WIRE HARNESS WITH SPLICE POINTS
I 9	34	COWL WIRE			

C 6

C 9

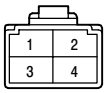

F11

(SEE PAGE 20)

J 3

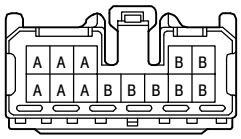

(HINT : SEE PAGE 7)

J 4

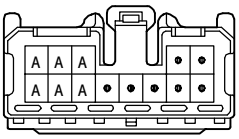

(HINT : SEE PAGE 7)

J 7 BLUE

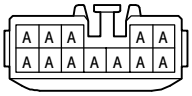

(HINT : SEE PAGE 7)

J 8 BLUE

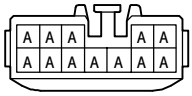

(HINT : SEE PAGE 7)

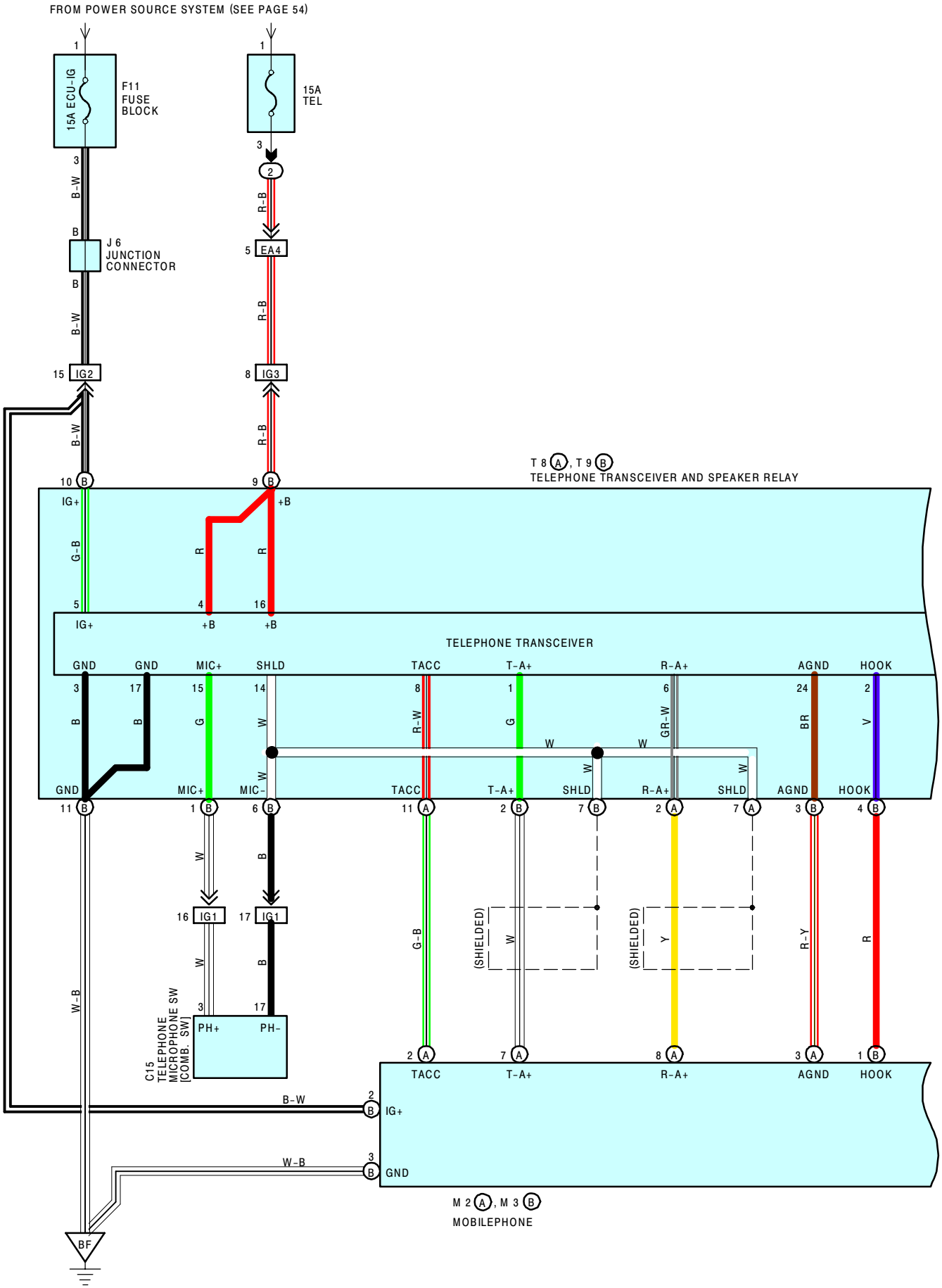
FROM POWER SOURCE SYSTEM (SEE PAGE 54)
15A ECU-IG
F11 FUSE BLOCK
15A TEL
J 6 JUNCTION CONNECTOR
EA4
IG2
IG3
T 8 (A), T 9 (B)
TELEPHONE TRANSCEIVER AND SPEAKER RELAY
IG+
+B
TELEPHONE TRANSCEIVER
GND
MIC+
SHLD
TACC
T-A+
R-A+
AGND
HOOK
MIC-
IG1
C15 TELEPHONE MICROPHONE SW [COMB. SW]
PH+
PH-
(SHIELDED)
M 2 (A), M 3 (B)
MOBILEPHONE
BF

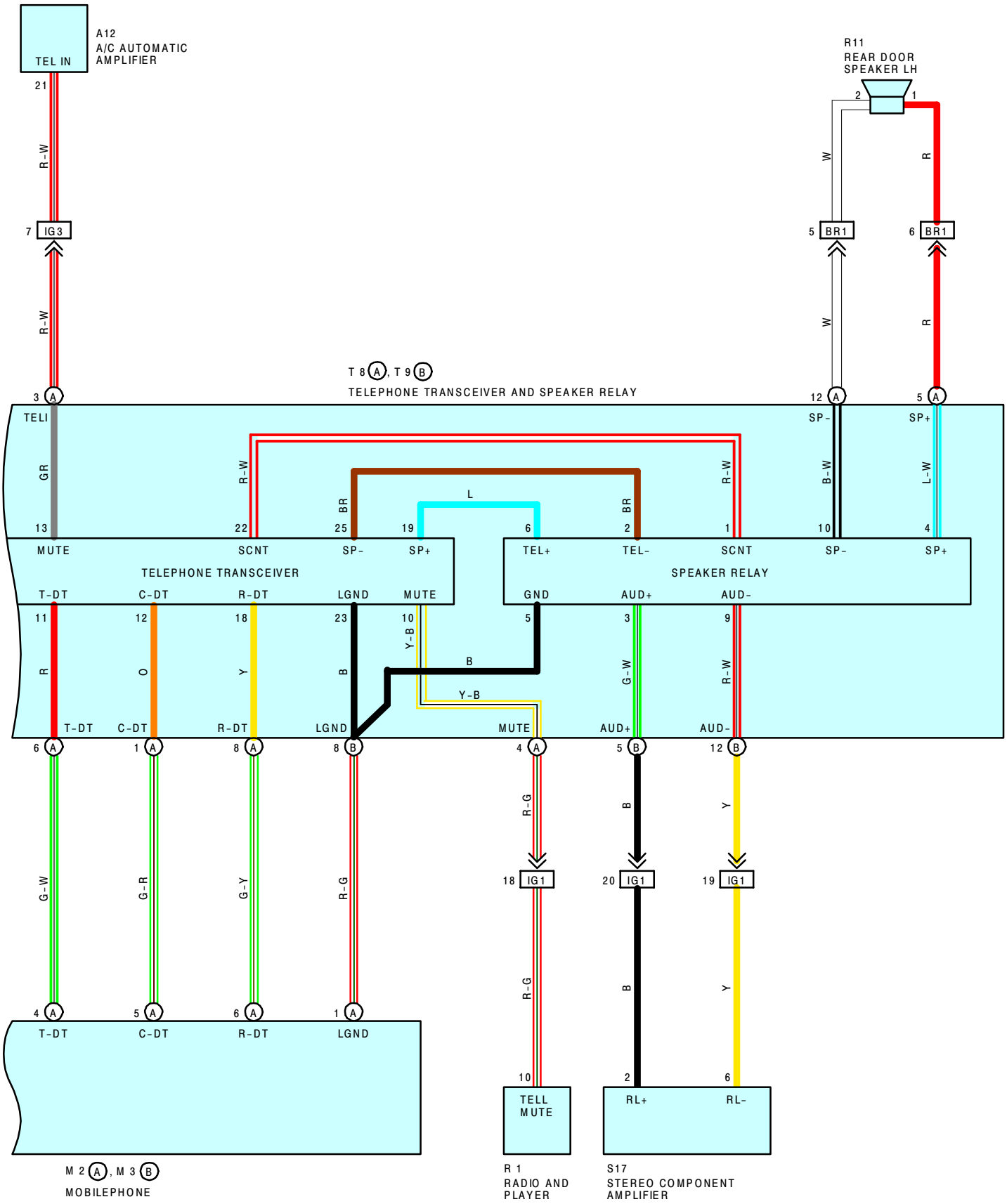
A12
A/C AUTOMATIC AMPLIFIER
TEL IN
21
R-W
7 IG3
R-W
R11
REAR DOOR SPEAKER LH
2
1
W
R
5 BR1
6 BR1
W
R
T 8 A, T 9 B
TELEPHONE TRANSCEIVER AND SPEAKER RELAY
3 A
12 A
5 A
TELI
SP-
SP+
GR
R-W
BR
L
BR
R-W
B-W
L-W
13
22
25
19
6
2
1
10
4
MUTE
SCNT
SP-
SP+
TEL+
TEL-
SCNT
SP-
SP+
TELEPHONE TRANSCEIVER
SPEAKER RELAY
T-DT
C-DT
R-DT
LGND
MUTE
GND
AUD+
AUD-
11
12
18
23
10
5
3
9
R
O
Y
B
Y-B
B
Y-B
G-W
R-W
T-DT
C-DT
R-DT
LGND
MUTE
AUD+
AUD-
6 A
1 A
8 A
8 B
4 A
5 B
12 B
G-W
G-R
G-Y
R-G
R-G
B
Y
18 IG1
20 IG1
19 IG1
R-G
B
Y
4 A
5 A
6 A
1 A
T-DT
C-DT
R-DT
LGND
10
2
6
TELL MUTE
RL+
RL-
M 2 A, M 3 B
MOBILEPHONE
R 1
RADIO AND PLAYER
S17
STEREO COMPONENT AMPLIFIER

CELLULAR MOBILE TELEPHONE

SERVICE HINTS

T 9 (B) TELEPHONE TRANSCEIVER AND SPEAKER RELAY

(B) 9–GROUND : ALWAYS APPROX. **12** VOLTS
(B) 10–GROUND : APPROX. **12** VOLTS WITH THE IGNITION SW AT **ON** POSITION
(B) 11–GROUND : ALWAYS CONTINUITY

: PARTS LOCATION

CODE	SEE PAGE	CODE		SEE PAGE	CODE		SEE PAGE
A12	24	**M 2**	A	26	**S 17**		25
C15	24	**M 3**	B	26	**T 8**	A	27
F11	25	**R 1**		25	**T 9**	B	27
J 6	25	**R11**		27			

: RELAY BLOCKS

CODE	SEE PAGE	RELAY BLOCKS (RELAY BLOCK LOCATION)
2	18	R/B NO. 2 (FRONT SIDE OF LEFT FENDER)

: CONNECTOR JOINING WIRE HARNESS AND WIRE HARNESS

CODE	SEE PAGE	JOINING WIRE HARNESS AND WIRE HARNESS (CONNECTOR LOCATION)
EA4	30	COWL WIRE AND ENGINE ROOM MAIN WIRE (RIGHT FENDER)
IG1	32	COWL WIRE AND FLOOR WIRE (LEFT KICK PANEL)
IG2		
IG3		
BR1	36	REAR DOOR LH WIRE AND FLOOR WIRE (LEFT CENTER PILLAR)

: GROUND POINTS

CODE	SEE PAGE	GROUND POINTS LOCATION
BF	36	UNDER THE CENTER CONSOLE BOX

A12

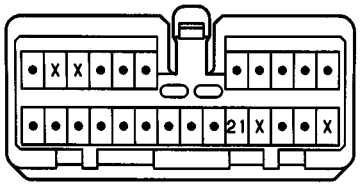

C15 BLACK

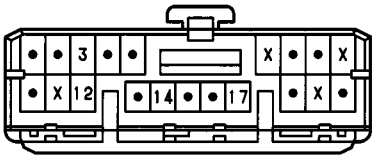

J 6

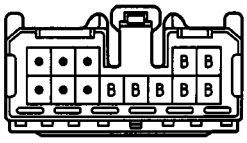

(HINT:SEE PAGE 7)

M 2 (A)

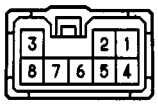

M 3 (B)

R 1

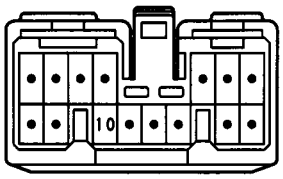

R11

S17 GRAY

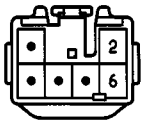

T 8 (A)

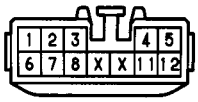

T 9 (B)

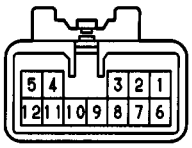

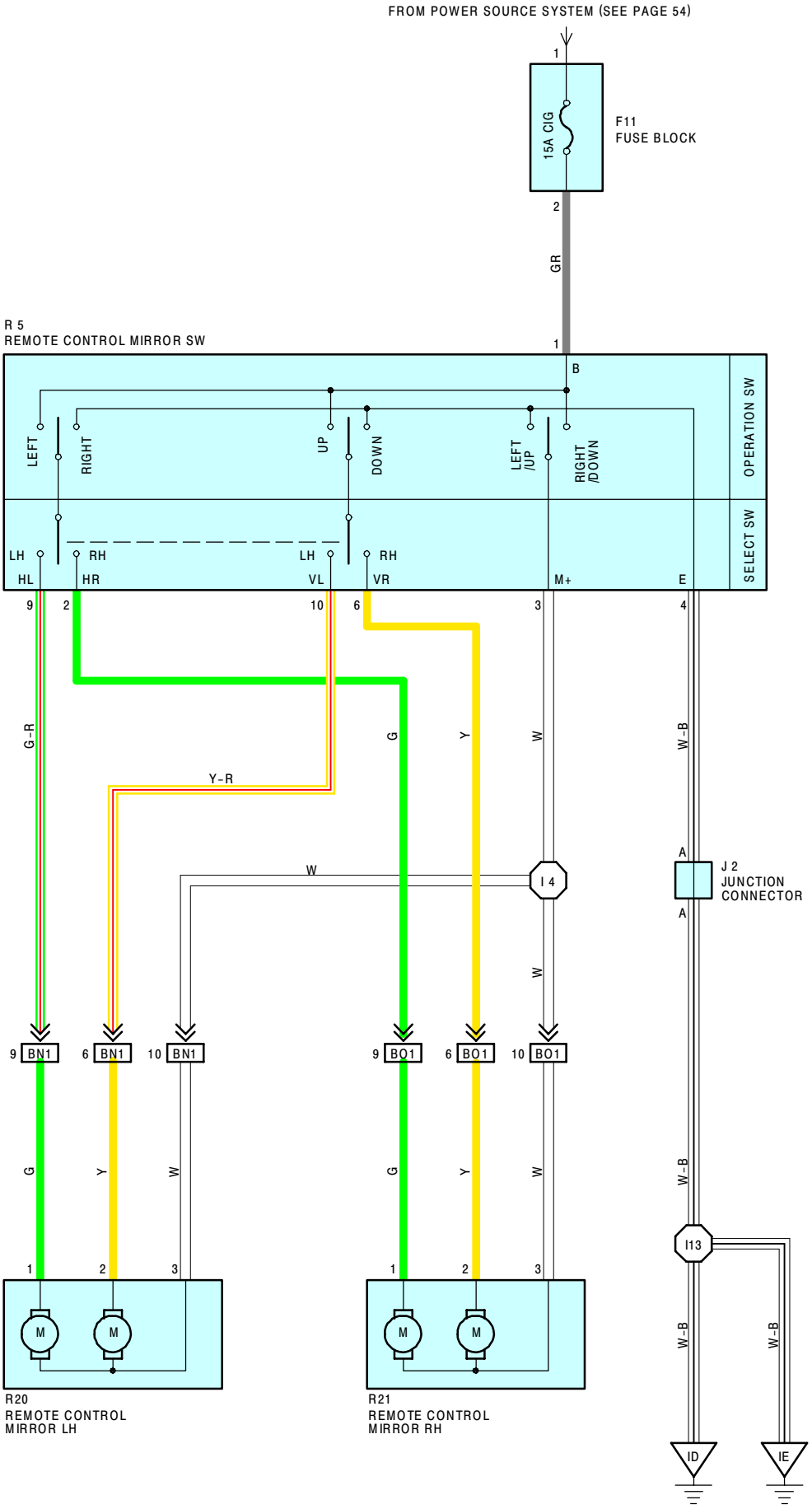
FROM POWER SOURCE SYSTEM (SEE PAGE 54)
15A CIG
F11
FUSE BLOCK
GR
R 5
REMOTE CONTROL MIRROR SW
B
LEFT
RIGHT
UP
DOWN
LEFT /UP
RIGHT /DOWN
OPERATION SW
SELECT SW
LH
RH
HL
HR
VL
VR
M+
E
G-R
G
Y
W
W-B
Y-R
I 4
J 2
JUNCTION CONNECTOR
BN1
BO1
I13
ID
IE
R20
REMOTE CONTROL MIRROR LH
R21
REMOTE CONTROL MIRROR RH

SERVICE HINTS

R 5 REMOTE CONTROL MIRROR SW

1–GROUND : APPROX. **12** VOLTS WITH THE IGNITION SW AT **ACC** OR **ON** POSITION
3–4 : CONTINUITY WITH THE OPERATION SW AT **UP** OR **LEFT** POSITION
9–4 : CONTINUITY WITH THE OPERATION SW AT **RIGHT** POSITION AND THE SELECT SW AT **LH** POSITION
10–4 : CONTINUITY WITH THE OPERATION SW AT **DOWN** POSITION AND THE SELECT SW AT **LH** POSITION
2–4 : CONTINUITY WITH THE OPERATION SW AT **RIGHT** POSITION AND THE SELECT SW AT **RH** POSITION
6–4 : CONTINUITY WITH THE OPERATION SW AT **DOWN** POSITION AND THE SELECT SW AT **RH** POSITION

○ : PARTS LOCATION

CODE	SEE PAGE	CODE	SEE PAGE	CODE	SEE PAGE
F11	25	**R 5**	25	**R21**	27
J 2	25	**R20**	27		

▭ : CONNECTOR JOINING WIRE HARNESS AND WIRE HARNESS

CODE	SEE PAGE	JOINING WIRE HARNESS AND WIRE HARNESS (CONNECTOR LOCATION)
BN1	36	FRONT DOOR LH WIRE AND COWL WIRE (LEFT KICK PANEL)
BO1	36	FRONT DOOR RH WIRE AND COWL WIRE (RIGHT KICK PANEL)

▽ : GROUND POINTS

CODE	SEE PAGE	GROUND POINTS LOCATION
ID	32	LEFT KICK PANEL
IE	32	RIGHT KICK PANEL

⬡ : SPLICE POINTS

CODE	SEE PAGE	WIRE HARNESS WITH SPLICE POINTS	CODE	SEE PAGE	WIRE HARNESS WITH SPLICE POINTS
I 4	34	COWL WIRE	**I13**	34	COWL WIRE

F11

(SEE PAGE 20)

J 2 BLUE

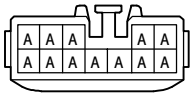

(HINT : SEE PAGE 7)

R 5

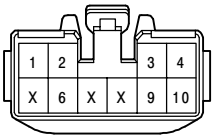

R20, R21

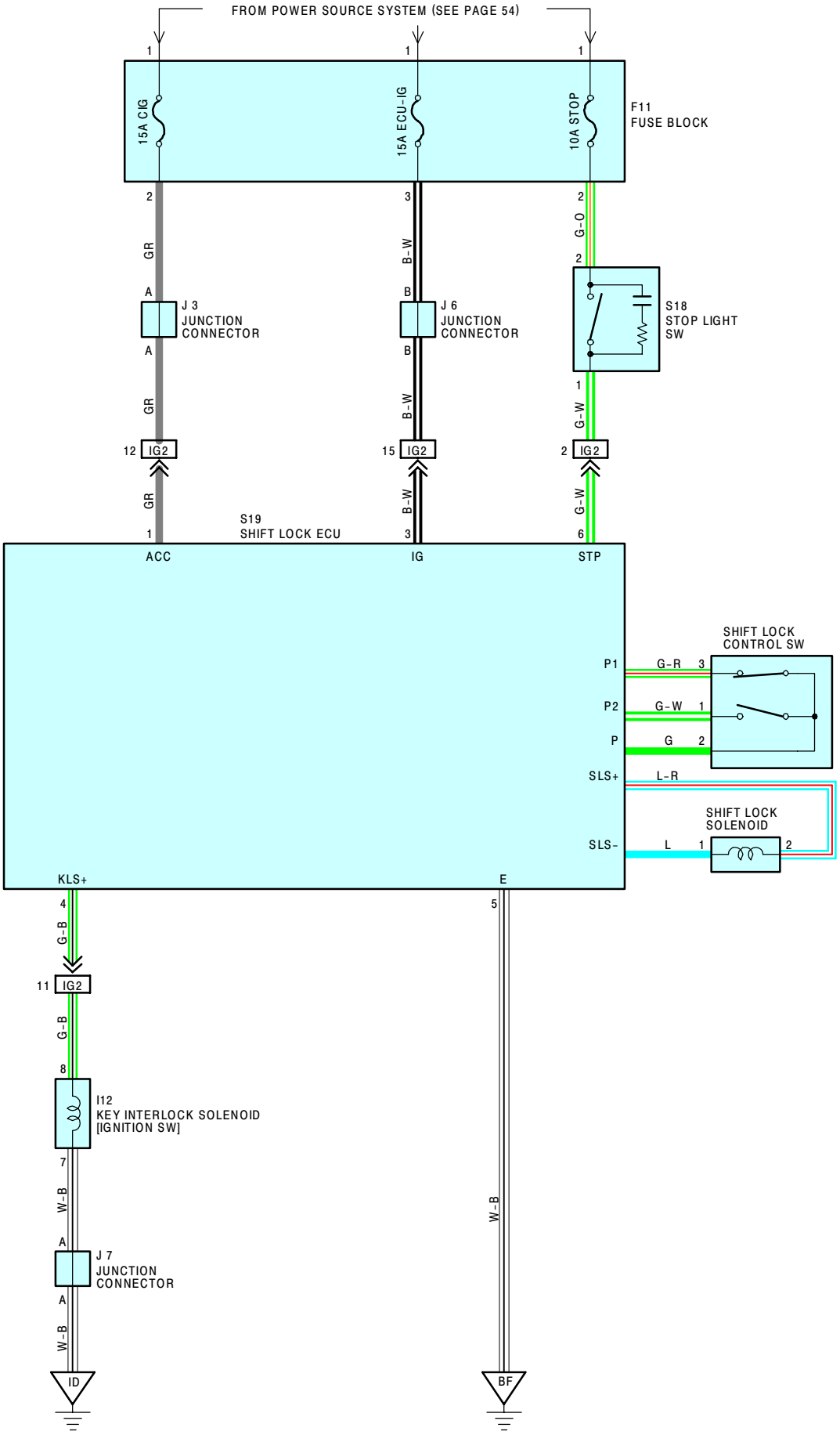
FROM POWER SOURCE SYSTEM (SEE PAGE 54)
15A CIG
15A ECU-IG
10A STOP
F11
FUSE BLOCK
GR
B-W
G-O
J 3
JUNCTION
CONNECTOR
J 6
JUNCTION
CONNECTOR
S18
STOP LIGHT
SW
G-W
IG2
S19
SHIFT LOCK ECU
ACC
IG
STP
SHIFT LOCK
CONTROL SW
P1
G-R
P2
G-W
P
G
SLS+
L-R
SHIFT LOCK
SOLENOID
SLS-
L
KLS+
E
G-B
I12
KEY INTERLOCK SOLENOID
[IGNITION SW]
W-B
J 7
JUNCTION
CONNECTOR
ID
BF

SYSTEM OUTLINE

WHEN THE IGNITION SW IS TURNED TO **ACC** POSITION THE CURRENT FROM THE **CIG** FUSE FLOWS TO **TERMINAL 1** OF THE SHIFT LOCK ECU. AT THE **ON** POSITION, THE CURRENT FROM THE **ECU–IG** FUSE FLOWS TO **TERMINAL 3** OF THE SHIFT LOCK ECU.

1. SHIFT LOCK MECHANISM

WITH THE IGNITION SW ON, WHEN A SIGNAL THAT THE BRAKE PEDAL IS DEPRESSED (STOP LIGHT SW ON) AND A SIGNAL THAT THE SHIFT LEVER IS PUT IN **P** POSITION (CONTINUITY BETWEEN P1 AND P OF THE SHIFT LOCK CONTROL SW) IS INPUT TO THE SHIFT LOCK ECU. THE SHIFT LOCK ECU OPERATES AND THE CURRENT FLOWS FROM **TERMINAL 3** OF THE SHIFT LOCK ECU → **TERMINAL SLS+** → **TERMINAL 2** OF THE SHIFT LOCK SOLENOID → SOLENOID → **TERMINAL 1** → **TERMINAL SLS–** OF THE SHIFT LOCK ECU → **TERMINAL 5** → **GROUND**. THIS CAUSES THE SHIFT LOCK SOLENOID TO TURN ON (PLATE STOPPER DISENGAGES), AND SHIFT LEVER CAN BE SHIFTED INTO OTHER POSITION THAN THE **P** POSITION.

2. KEY INTERLOCK MECHANISM

WITH THE IGNITION SW AT **ON** OR **ACC** POSITION, WHEN SHIFT LEVER IS PUT IN **P** POSITION (NO CONTINUITY BETWEEN P2 AND P OF THE SHIFT LOCK CONTROL SW), THE CURRENT FROM **TERMINAL 4** OF THE SHIFT LOCK ECU TO THE KEY INTERLOCK SOLENOID IS CUT OFF. THIS CAUSES THE KEY INTERLOCK SOLENOID TO TURN OFF (LOCK LEVER DISENGAGES FROM LOCK POSITION), AND THE IGNITION KEY CAN BE TURNED FROM **ACC** TO **LOCK** POSITION.

SERVICE HINTS

S19 SHIFT LOCK ECU

1–GROUND : APPROX. **12** VOLTS WITH THE IGNITION SW AT **ACC** OR **ON** POSITION
3–GROUND : APPROX. **12** VOLTS WITH THE IGNITION SW AT **ON** POSITION
5–GROUND : ALWAYS CONTINUITY
6–GROUND : APPROX. **12** VOLTS WITH THE BRAKE PEDAL DEPRESSED (STOP LIGHT SW ON)

○ : PARTS LOCATION

CODE	SEE PAGE	CODE	SEE PAGE	CODE	SEE PAGE
F11	25	**J 6**	25	**S19**	27
I12	25	**J 7**	25		
J 3	25	**S18**	25		

▭ : CONNECTOR JOINING WIRE HARNESS AND WIRE HARNESS

CODE	SEE PAGE	JOINING WIRE HARNESS AND WIRE HARNESS (CONNECTOR LOCATION)
IG2	32	COWL WIRE AND FLOOR WIRE (LEFT KICK PANEL)

▽ : GROUND POINTS

CODE	SEE PAGE	GROUND POINTS LOCATION
ID	32	LEFT KICK PANEL
BF	36	UNDER THE CENTER CONSOLE BOX

F11

SEE PAGE 20)

I12 BLACK

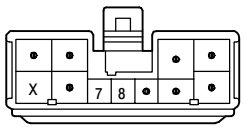

J 3

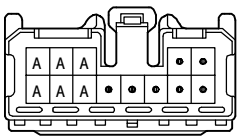

(HINT : SEE PAGE 7)

J 6

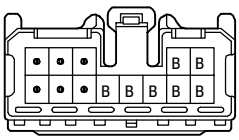

(HINT : SEE PAGE 7)

J 7 BLUE

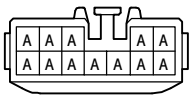

(HINT : SEE PAGE 7)

S18 BLACK

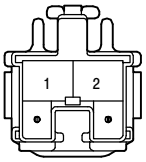

S19

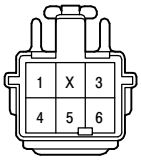

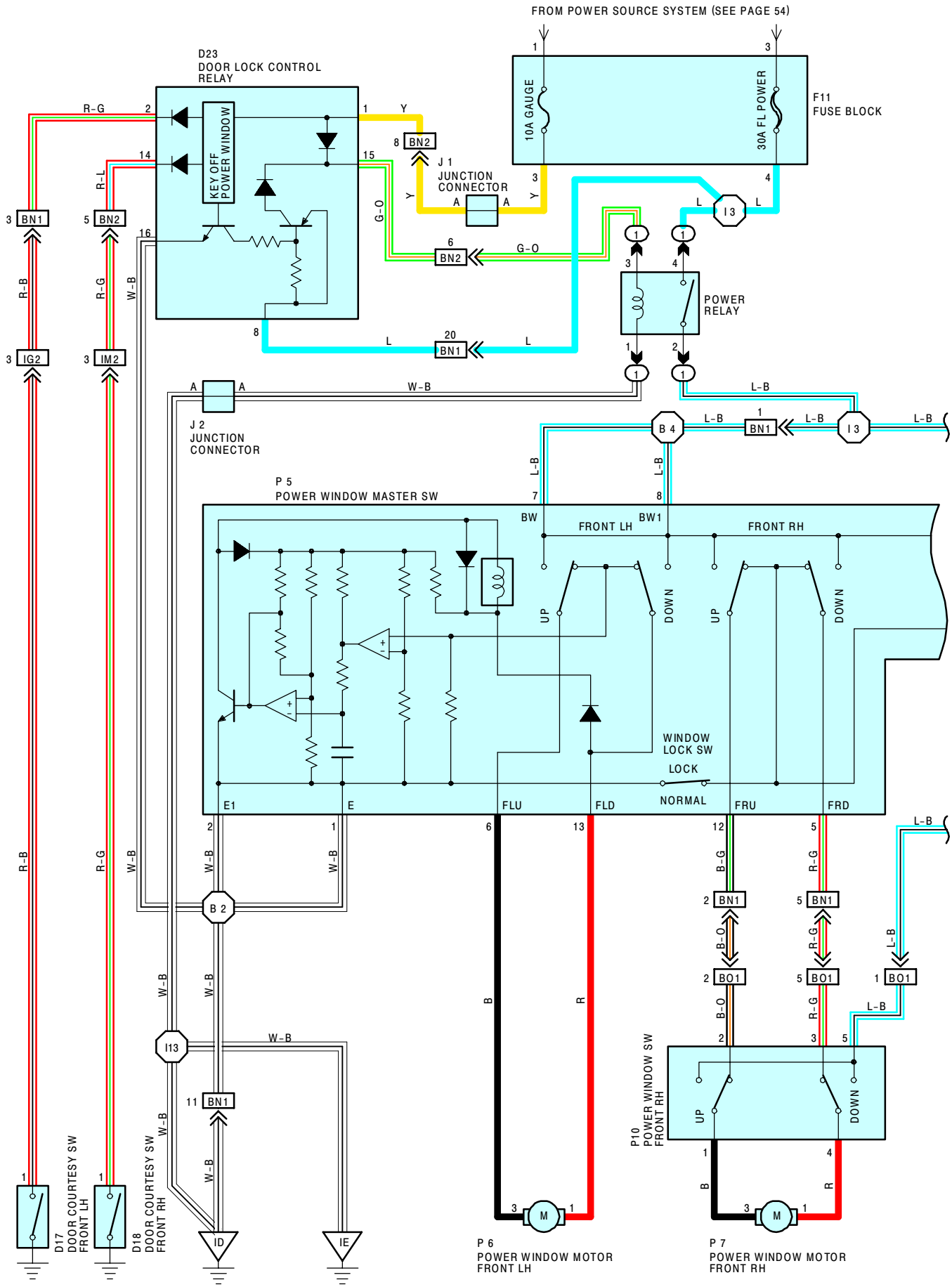
FROM POWER SOURCE SYSTEM (SEE PAGE 54)
D23
DOOR LOCK CONTROL
RELAY
KEY OFF
POWER WINDOW
F11
FUSE BLOCK
10A GAUGE
30A FL POWER
J 1
JUNCTION
CONNECTOR
POWER
RELAY
J 2
JUNCTION
CONNECTOR
P 5
POWER WINDOW MASTER SW
FRONT LH
FRONT RH
UP
DOWN
WINDOW
LOCK SW
LOCK
NORMAL
E1
E
FLU
FLD
FRU
FRD
P10
POWER WINDOW SW
FRONT RH
D17
DOOR COURTESY SW
FRONT LH
D18
DOOR COURTESY SW
FRONT RH
P 6
POWER WINDOW MOTOR
FRONT LH
P 7
POWER WINDOW MOTOR
FRONT RH

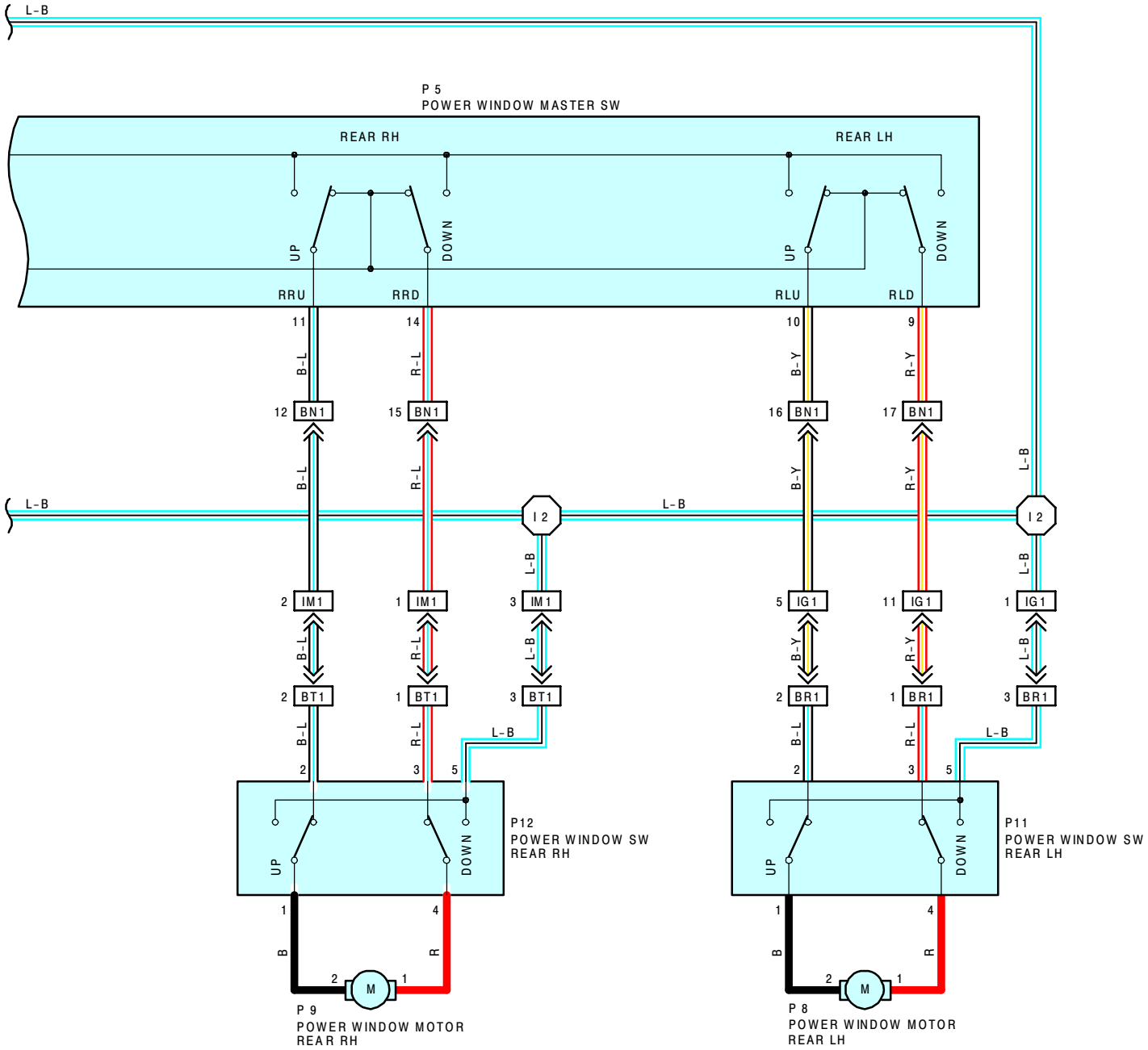
L-B
P 5
POWER WINDOW MASTER SW
REAR RH
REAR LH
UP
DOWN
UP
DOWN
RRU
RRD
RLU
RLD
11
14
10
9
B-L
R-L
B-Y
R-Y
12 BN1
15 BN1
16 BN1
17 BN1
B-L
R-L
B-Y
R-Y
L-B
L-B
I 2
L-B
I 2
L-B
L-B
2 IM1
1 IM1
3 IM1
5 IG1
11 IG1
1 IG1
B-L
R-L
L-B
B-Y
R-Y
L-B
2 BT1
1 BT1
3 BT1
2 BR1
1 BR1
3 BR1
B-L
R-L
L-B
B-L
R-L
L-B
2
3
5
2
3
5
P12
POWER WINDOW SW
REAR RH
P11
POWER WINDOW SW
REAR LH
UP
DOWN
UP
DOWN
1
4
1
4
B
R
B
R
2
M
1
2
M
1
P 9
POWER WINDOW MOTOR
REAR RH
P 8
POWER WINDOW MOTOR
REAR LH

SYSTEM OUTLINE

WITH THE IGNITION SW TURNED ON, CURRENT FLOWS THROUGH THE **GAUGE** FUSE TO **TERMINAL 3** OF THE POWER RELAY → **TERMINAL 1** → **GROUND.** THIS ACTIVATES THE RELAY AND THE CURRENT FROM **FL POWER** FUSE FLOWS TO **TERMINAL 4** OF THE POWER RELAY → **TERMINAL 2** → **TERMINALS 7** AND **8** OF THE POWER WINDOW MASTER SW, TO **TERMINAL 5** OF THE POWER WINDOW SW FRONT RH, REAR LH AND REAR RH.

1. MANUAL UP OPERATION (DRIVER'S SIDE)

WITH THE IGNITION SW TURNED ON AND WITH THE POWER WINDOW MASTER SW (MANUAL SW) AT **UP** POSITION, CURRENT FLOWS TO **TERMINALS 7** AND **8** OF THE POWER WINDOW MASTER SW → **TERMINAL 6** → **TERMINAL 3** OF THE POWER WINDOW MOTOR FRONT LH → **TERMINAL 1** → **TERMINAL 13** OF THE POWER WINDOW MASTER SW → **TERMINALS 2** AND **1** → **GROUND,** CAUSING THE POWER WINDOW MOTOR TO ROTATE IN THE UP DIRECTION. THE WINDOW ASCENDS ONLY WHILE THE POWER WINDOW MASTER SW IS BEING PULLED.

IN DOWN OPERATION, THE CURRENT FLOW TO **TERMINALS 7** AND **8** OF THE POWER WINDOW MASTER SW FLOWS TO **TERMINAL 13** → **TERMINAL 1** OF THE POWER WINDOW MOTOR FRONT LH → **TERMINAL 3** → **TERMINAL 6** OF THE POWER WINDOW MASTER SW → **TERMINALS 2** AND **1** → **GROUND.** ACCORDING TO THE FLOW, THE MOTOR ROTATES IN THE DOWN DIRECTION, LOWERING THE WINDOW.

2. AUTO DOWN OPERATION (DRIVER'S SIDE)

WITH THE IGNITION SW ON AND WITH THE AUTO DOWN SW OF THE POWER WINDOW MASTER SW IN **DOWN** POSITION, CURRENT FLOWS TO **TERMINALS 7** AND **8** OF THE POWER WINDOW MASTER SW → **TERMINAL 13** → **TERMINAL 1** OF THE POWER WINDOW MOTOR FRONT LH → **TERMINAL 3** → **TERMINAL 6** OF THE POWER WINDOW MASTER SW → **TERMINALS 1** AND **2** → **GROUND,** CAUSING THE MOTOR TO ROTATE TOWARDS THE DOWN SIDE.

THEN THE SOLENOID IN THE POWER WINDOW MASTER SW IS ACTIVATED AND IT LOCKS THE AUTO SW BEING PUSHED, CAUSING THE MOTOR TO CONTINUE TO ROTATE IN AUTO DOWN OPERATION.

WHEN THE WINDOW HAS COMPLETELY DESCENDED, THE CURRENT BETWEEN **TERMINAL 6** OF THE POWER WINDOW MASTER SW AND **TERMINALS 1** AND **2** INCREASES. AS A RESULT, THE SOLENOID STOPS OPERATING, AUTO DOWN SW TURNS OFF, AND THE CURRENT FROM **TERMINALS 7** AND **8** OF THE POWER WINDOW MASTER SW TO **TERMINAL 13** IS CUT OFF, STOPPING THE MOTOR SO THAT AUTO STOP OCCURS.

3. STOPPING OF AUTO DOWN AT DRIVER'S WINDOW

WHEN THE MANUAL SW (DRIVER'S) IS PUSHED TO THE UP SIDE DURING AUTO DOWN OPERATION, A GROUND CIRCUIT OPENS IN THE POWER WINDOW MASTER SW AND THE CURRENT DOES NOT FLOW FROM **TERMINAL 6** OF THE POWER WINDOW MASTER SW TO **TERMINALS 1** AND **2,** SO THE MOTOR STOPS, CAUSING AUTO DOWN OPERATION TO STOP. IF THE MANUAL SW IS PUSHED CONTINUOUSLY, THE MOTOR ROTATES IN THE UP DIRECTION IN MANUAL UP OPERATION.

4. MANUAL OPERATION BY POWER WINDOW SW (PASSENGER'S SIDE)

WITH THE POWER WINDOW SW FRONT RH PULLED TO THE UP SIDE, THE CURRENT FROM **TERMINAL 5** OF THE POWER WINDOW SW FRONT RH FLOWS TO **TERMINAL 1** OF THE POWER WINDOW SW → **TERMINAL 3** OF THE POWER WINDOW MOTOR → **TERMINAL 1** → **TERMINAL 4** OF THE POWER WINDOW SW → **TERMINAL 3** → **TERMINAL 5** OF THE POWER WINDOW MASTER SW → **TERMINALS 1** AND **2** → **GROUND,** CAUSING THE POWER WINDOW MOTOR FRONT RH TO ROTATE IN THE UP DIRECTION. UP OPERATION CONTINUES ONLY WHILE THE POWER WINDOW SW IS BEING PULLED TO THE UP SIDE. WHEN THE WINDOW DESCENDS, THE CURRENT TO THE MOTOR FLOWS IN THE OPPOSITE DIRECTION, FROM **TERMINAL 1** TO **TERMINAL 3,** AND THE MOTOR ROTATES IN REVERSE.

WHEN THE WINDOW LOCK SW IS PUSHED OUT TO THE NORMAL SIDE, THE GROUND CIRCUIT TO THE FRONT RH WINDOW BECOMES OPEN.

AS A RESULT, EVEN IF OPEN/CLOSE OPERATION OF THE FRONT RH WINDOW IS TRIED, THE CURRENT FROM **TERMINALS 1** AND **2** OF THE POWER WINDOW MASTER SW IS NOT GROUNDED AND THE MOTOR DOES NOT ROTATE, SO THE FRONT RH WINDOW CAN NOT BE OPERATED AND WINDOW LOCK OCCURS.

FURTHERMORE REAR LH, RH WINDOW OPERATE THE SAME AS THE ABOVE OPERATION.

5. KEY OFF POWER WINDOW OPERATION

WITH THE IGNITION SW TURNED FROM ON TO OFF, THE DOOR LOCK CONTROL RELAY OPERATES AND KEEPS THE CURRENT FLOW FROM **FL POWER** FUSE TO **TERMINAL 8** OF THE DOOR LOCK CONTROL RELAY → **TERMINAL 15** → **TERMINAL 3** OF THE POWER RELAY → **TERMINAL 1** → **GROUND** FOR ABOUT **60** SECONDS. THE SAME AS NORMAL OPERATION, CURRENT FLOWS FROM **FL POWER** FUSE TO **TERMINAL 4** OF THE POWER RELAY → **TERMINAL 2** → **TERMINALS 7** AND **8** OF THE POWER WINDOW MASTER SW, TO **TERMINAL 5** OF THE POWER WINDOW SW FRONT RH. AS A RESULT, FOR ABOUT **60** SECONDS AFTER THE IGNITION SW IS TURNED OFF, IT IS POSSIBLE TO RAISE AND LOWER THE WINDOW BY THE FUNCTIONING OF THIS RELAY. ALSO, BY OPENING THE FRONT DOOR (THE DOOR COURTESY SW ON) WITHIN ABOUT **60** SECONDS AFTER TURNING THE IGNITION SW TO OFF, A SIGNAL IS INPUT TO **TERMINAL 2** OR **14** OF THE DOOR LOCK CONTROL RELAY. AS A RESULT, THE RELAY TURNS OFF, AND UP AND DOWN MOVEMENT OF THE WINDOW STOPS.

SERVICE HINTS

P 5 POWER WINDOW MASTER SW

7, 8–GROUND : APPROX. **12** VOLTS WITH THE IGNITION SW AT **ON** POSITION OR KEY OFF OPERATED
1, 2–GROUND : ALWAYS CONTINUITY
6–GROUND : APPROX. **12** VOLTS WITH THE IGNITION SW **ON** AND THE MASTER SW (DRIVER'S WINDOW) AT **UP** POSITION
13–GROUND : APPROX. **12** VOLTS WITH THE IGNITION SW **ON** AND THE MASTER SW (DRIVER'S WINDOW) AT **DOWN** OR **AUTO DOWN** POSITION

WINDOW LOCK SW

OPEN WITH THE WINDOW LOCK SW AT **LOCK** POSITION

○ : PARTS LOCATION

CODE	SEE PAGE	CODE	SEE PAGE	CODE	SEE PAGE
D17	26	**J 2**	25	**P 9**	27
D18	26	**P 5**	27	**P10**	27
D23	26	**P 6**	27	**P11**	27
F11	25	**P 7**	27	**P12**	27
J 1	25	**P 8**	27		

⬭ : RELAY BLOCKS

CODE	SEE PAGE	RELAY BLOCKS (RELAY BLOCK LOCATION)
1	20	R/B NO. 1 (LEFT KICK PANEL)

▭ : CONNECTOR JOINING WIRE HARNESS AND WIRE HARNESS

CODE	SEE PAGE	JOINING WIRE HARNESS AND WIRE HARNESS (CONNECTOR LOCATION)
IG1	32	COWL WIRE AND FLOOR WIRE (LEFT KICK PANEL)
IG2		
IM1	34	COWL WIRE AND FLOOR NO. 2 WIRE (RIGHT KICK PANEL)
IM2		
BN1	36	FRONT DOOR LH WIRE AND COWL WIRE (LEFT KICK PANEL)
BN2		
BO1	36	FRONT DOOR RH WIRE AND COWL WIRE (RIGHT KICK PANEL)
BR1	36	REAR DOOR LH WIRE AND FLOOR WIRE (LEFT CENTER PILLAR)
BT1	36	REAR DOOR RH WIRE AND FLOOR NO. 2 WIRE (RIGHT CENTER PILLAR)

▽ : GROUND POINTS

CODE	SEE PAGE	GROUND POINTS LOCATION
ID	32	LEFT KICK PANEL
IE	32	RIGHT KICK PANEL

⬡ : SPLICE POINTS

CODE	SEE PAGE	WIRE HARNESS WITH SPLICE POINTS	CODE	SEE PAGE	WIRE HARNESS WITH SPLICE POINTS
I 2	34	COWL WIRE	**B 2**	38	FRONT DOOR LH WIRE
I 3			**B 4**		
I13					

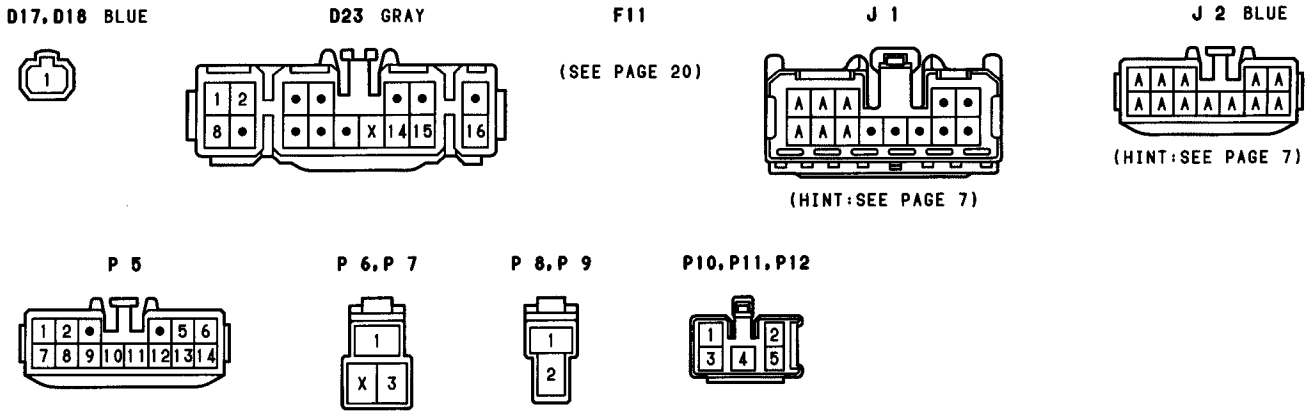

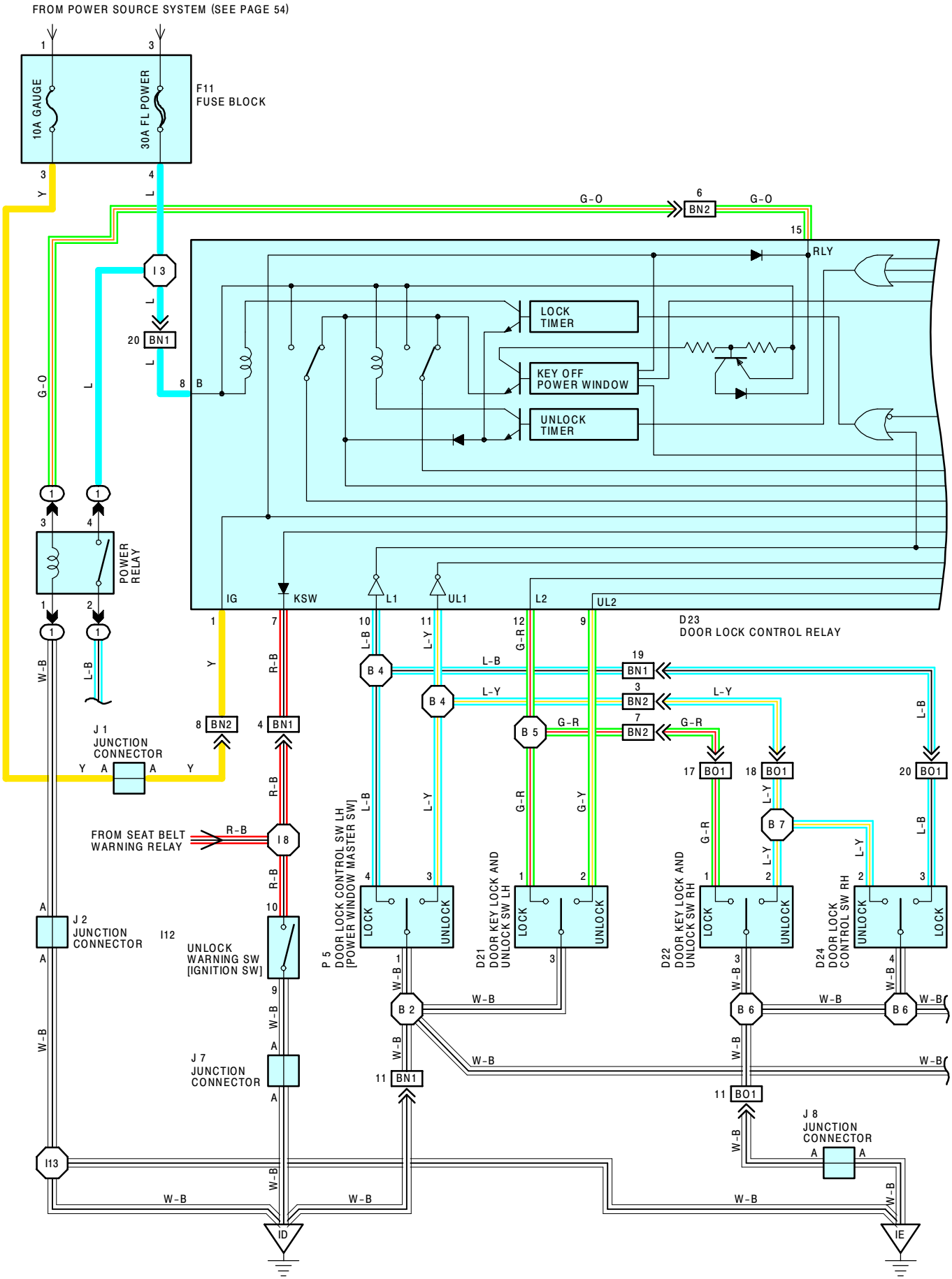
FROM POWER SOURCE SYSTEM (SEE PAGE 54)
F11
FUSE BLOCK
10A GAUGE
30A FL POWER
LOCK TIMER
KEY OFF POWER WINDOW
UNLOCK TIMER
RLY
POWER RELAY
IG
KSW
L1
UL1
L2
UL2
D23
DOOR LOCK CONTROL RELAY
J 1
JUNCTION CONNECTOR
FROM SEAT BELT WARNING RELAY
J 2
JUNCTION CONNECTOR
UNLOCK WARNING SW [IGNITION SW]
J 7
JUNCTION CONNECTOR
P 5
DOOR LOCK CONTROL SW LH [POWER WINDOW MASTER SW]
D21
DOOR KEY LOCK AND UNLOCK SW LH
D22
DOOR KEY LOCK AND UNLOCK SW RH
D24
DOOR LOCK CONTROL SW RH
J 8
JUNCTION CONNECTOR
LOCK
UNLOCK

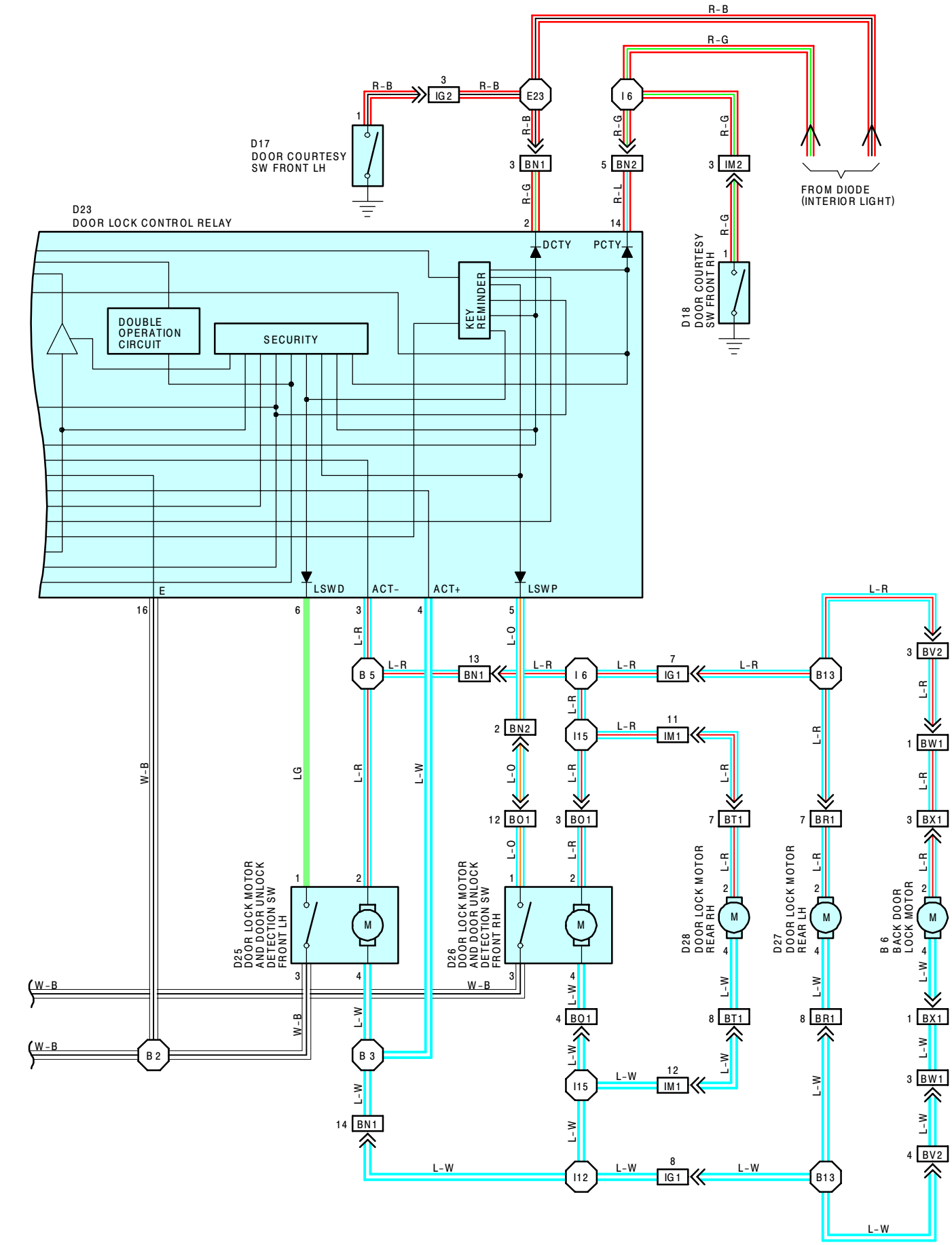
R-B
R-G
IG2
E23
I6
D17
DOOR COURTESY
SW FRONT LH
BN1
BN2
IM2
FROM DIODE
(INTERIOR LIGHT)
D23
DOOR LOCK CONTROL RELAY
DCTY
PCTY
KEY
REMINDER
DOUBLE
OPERATION
CIRCUIT
SECURITY
D18
DOOR COURTESY
SW FRONT RH
LSWD
ACT-
ACT+
LSWP
E
L-R
L-O
W-B
LG
L-W
B 5
IG1
B13
BV2
BW1
BX1
I15
IM1
BO1
BT1
BR1
D25
DOOR LOCK MOTOR
AND DOOR UNLOCK
DETECTION SW
FRONT LH
D26
DOOR LOCK MOTOR
AND DOOR UNLOCK
DETECTION SW
FRONT RH
D28
DOOR LOCK MOTOR
REAR RH
D27
DOOR LOCK MOTOR
REAR LH
B 6
BACK DOOR
LOCK MOTOR
B 2
B 3
I12
M

SYSTEM OUTLINE

CURRENT ALWAYS FLOWS TO **TERMINAL 8** OF THE DOOR LOCK CONTROL RELAY THROUGH THE **FL POWER** FUSE.

WITH THE IGNITION SW TURNED ON, THE CURRENT FLOWS TO **TERMINAL 1** OF THE DOOR LOCK CONTROL RELAY THROUGH THE **GAUGE** FUSE.

1. MANUAL LOCK OPERATION

TO CHANGE THE DOOR LOCK CONTROL SW OR KEY LOCK AND UNLOCK SW TO **LOCK** POSITION, A LOCK SIGNAL IS INPUT TO **TERMINALS 10** OR **12** OF THE DOOR LOCK CONTROL RELAY, CAUSING THE RELAY TO FUNCTION. THE CURRENT FLOWS FROM **TERMINAL 8** OF THE DOOR LOCK CONTROL RELAY TO **TERMINAL 4** → **TERMINAL 4** OF THE DOOR LOCK MOTORS → **TERMINALS 2** → **TERMINAL 3** OF THE DOOR LOCK CONTROL RELAY → **TERMINAL 16** → **GROUND**, CAUSING THE DOORS TO LOCK.

2. MANUAL UNLOCK OPERATION

TO CHANGE THE DOOR LOCK CONTROL SW OR DOOR KEY LOCK AND UNLOCK SW TO **UNLOCK** POSITION, AN UNLOCK SIGNAL IS INPUT TO **TERMINALS 9** OR **11** OF THE DOOR LOCK CONTROL RELAY, CAUSING THE RELAY TO FUNCTION. THE CURRENT FLOWS FROM **TERMINAL 8** OF THE DOOR LOCK CONTROL RELAY TO **TERMINAL 3** → **TERMINAL 2** OF THE DOOR LOCK MOTORS → **TERMINALS 4** → **TERMINAL 4** OF THE DOOR LOCK CONTROL RELAY → **TERMINAL 16** → **GROUND**, CAUSING THE DOORS TO UNLOCK.

3. DOUBLE OPERATION UNLOCK OPERATION

WHEN THE DOOR KEY LOCK AND UNLOCK SW LH IS TURNED TO THE UNLOCK SIDE, ONLY THE DRIVER'S DOOR IS MECHANICALLY UNLOCKED. TURNING THE DOOR KEY LOCK AND UNLOCK SW LH TO THE UNLOCK SIDE CAUSES A SIGNAL TO BE INPUT TO **TERMINAL 9** OF THE DOOR LOCK CONTROL RELAY, AND IF THE SIGNAL IS INPUT AGAIN WITHIN **3** SECONDS BY TURNING THE SWITCH TO THE UNLOCK SIDE AGAIN, THE CURRENT FLOWS FROM **TERMINAL 3** OF THE DOOR LOCK CONTROL RELAY TO **TERMINAL 2** OF THE DOOR LOCK MOTORS → **TERMINALS 4** → **TERMINAL 4** OF THE DOOR LOCK CONTROL RELAY → **TERMINAL 16** → **GROUND**, CAUSING THE DOOR LOCK MOTOR TO OPERATE TO UNLOCK THE DOORS.

4. IGNITION KEY REMINDER OPERATION

* OPERATING DOOR LOCK KNOB (OPERATION OF DOOR LOCK MOTORS)

  WITH THE IGNITION KEY IN CYLINDER (UNLOCK WARNING SW ON), WHEN EITHER FRONT DOOR IS OPENED AND LOCKED USING DOOR LOCK KNOB (DOOR LOCK MOTOR), THE DOOR IS LOCKED ONCE BUT EACH DOOR IS UNLOCKED SOON BY THE FUNCTION OF THE DOOR LOCK CONTROL RELAY. AS A RESULT, THE CURRENT FLOWS FROM **TERMINAL 8** OF THE DOOR LOCK CONTROL RELAY → **TERMINAL 3** → **TERMINAL 2** OF THE DOOR LOCK MOTORS → **TERMINALS 4** → **TERMINAL 4** OF THE DOOR LOCK CONTROL RELAY → **TERMINAL 16** → **GROUND**, CAUSING ALL THE DOORS TO UNLOCK.

* OPERATING DOOR LOCK CONTROL SW OR DOOR KEY LOCK SW

  WITH THE IGNITION KEY IN CYLINDER (UNLOCK WARNING SW ON), WHEN EITHER FRONT DOOR IS OPENED AND LOCKED USING DOOR LOCK CONTROL SW OR KEY SW, THE DOOR IS LOCKED ONCE BUT EACH DOOR IS UNLOCK SOON BY THE FUNCTION OF SW CONTAINED IN MOTORS, WHICH THE SIGNAL IS INPUT TO **TERMINAL 6** (DRIVER'S) OR **5** (PASSENGER'S) OF THE DOOR LOCK CONTROL RELAY. ACCORDING TO THIS INPUT SIGNAL, THE CURRENT FLOWS FROM **TERMINAL 8** OF THE DOOR LOCK CONTROL RELAY TO **TERMINAL 3** → **TERMINAL 2** OF THE DOOR LOCK MOTORS → **TERMINALS 4** → **TERMINAL 4** OF THE DOOR LOCK CONTROL RELAY → **TERMINAL 16** → **GROUND**, CAUSING ALL THE DOORS TO UNLOCK.

* IN CASE OF KEY LESS LOCK

  WITH THE IGNITION KEY IN CYLINDER (UNLOCK WARNING SW ON), WHEN THE UNLOCK FUCTION IS DISTURBED MORE THAN **0.2** SECONDS, FOR EXAMPLE PUSHING THE DOOR LOCK KNOB ETC., THE DOOR HOLDS ON LOCK CONDITION. AFTER CLOSING THE DOOR, THE DOOR COURTESY SW INPUTS A SIGNAL INTO **TERMINAL 2** OR **14** OF THE DOOR LOCK CONTROL RELAY. BY THIS INPUT SIGNAL, THE ECU WORKS AND THE CURRENT FLOWS FROM **TERMINAL 8** OF THE DOOR LOCK CONTROL RELAY → **TERMINAL 3** → **TERMINAL 2** OF THE DOOR LOCK MOTORS → **TERMINALS 4** → **TERMINAL 4** OF THE DOOR LOCK CONTROL RELAY → **TERMINAL 16** → **GROUND**, CAUSING ALL THE DOORS TO UNLOCK.

SERVICE HINTS

D23 DOOR LOCK CONTROL RELAY

16–GROUND : ALWAYS CONTINUITY
2–GROUND : CONTINUITY WITH THE DRIVER'S DOOR OPENED
8–GROUND : ALWAYS APPROX. **12** VOLTS
3–GROUND : APPROX. **12** VOLTS **0.2** SECONDS WITH FOLLOWING OPERATION
* THE DOOR LOCK CONTROL SW UNLOCKED
* THE DOOR LOCK CONTROL SW LOCKED WITH THE IGNITION KEY IN CYLINDER AND THE DRIVER'S DOOR OPENED (IGNITION KEY REMINDER FUNCTION)
* THE DOOR LOCK KNOB LOCKED WITH THE IGNITION KEY IN CYLINDER AND THE DRIVER'S DOOR OPENED (IGNITION KEY REMINDER FUNCTION)
* UNLOCKING THE DRIVER'S, PASSENGER'S DOOR CYLINDER WITH KEY

4–GROUND : APPROX. **12** VOLTS **0.2** SECONDS WITH FOLLOWING OPERATION
* THE DOOR LOCK CONTROL SW LOCKED
* LOCKING THE DRIVER'S, PASSENGER'S DOOR CYLINDER WITH KEY

10–GROUND : **0** VOLTS WITH THE DOOR LOCK CONTROL SW LOCKED
14–GROUND : CONTINUITY WITH THE PASSENGER'S DOOR OPENED
6–GROUND : CONTINUITY WITH THE DRIVER'S DOOR LOCK KNOB UNLOCKED
5–GROUND : CONTINUITY WITH THE PASSENGER'S DOOR LOCK KNOB UNLOCKED
11–GROUND : **0** VOLTS WITH THE DOOR LOCK CONTROL SW UNLOCKED, PASSENGER'S DOOR LOCK CYLINDER UNLOCKED WITH KEY
1–GROUND : APPROX. **12** VOLTS WITH THE IGNITION SW AT **ON** POSITION
9–GROUND : **0** VOLTS WITH THE DRIVER'S DOOR LOCK CYLINDER UNLOCKED WITH KEY
12–GROUND : **0** VOLTS WITH THE DRIVER'S, PASSENGER'S DOOR LOCK CYLINDER LOCKED WITH KEY

I12 UNLOCK WARNING SW [IGNITION SW]

10–9 : CLOSED WITH THE IGNITION KEY IN CYLINDER

D21, D22 DOOR KEY LOCK AND UNLOCK SW LH, RH

2–3 : CLOSED WITH THE DOOR LOCK CYLINDER UNLOCKED WITH KEY
1–3 : CLOSED WITH THE DOOR LOCK CYLINDER LOCKED WITH KEY

D17, D18 DOOR COURTESY SW FRONT LH, RH

1–GROUND : CLOSED WITH THE FRONT DOOR OPENED

○ : PARTS LOCATION

CODE	SEE PAGE	CODE	SEE PAGE	CODE	SEE PAGE
B 6	26	**D24**	26	**I12**	25
D17	26	**D25**	26	**J 1**	25
D18	26	**D26**	26	**J 2**	25
D21	26	**D27**	26	**J 7**	25
D22	26	**D28**	26	**J 8**	25
D23	26	**F11**	25	**P 5**	27

: RELAY BLOCKS

CODE	SEE PAGE	RELAY BLOCKS (RELAY BLOCK LOCATION)
1	20	R/B NO. 1 (LEFT KICK PANEL)

: CONNECTOR JOINING WIRE HARNESS AND WIRE HARNESS

CODE	SEE PAGE	JOINING WIRE HARNESS AND WIRE HARNESS (CONNECTOR LOCATION)
IG1	32	COWL WIRE AND FLOOR WIRE (LEFT KICK PANEL)
IG2		
IM1	34	COWL WIRE AND FLOOR NO. 2 WIRE (RIGHT KICK PANEL)
IM2		
BN1	36	FRONT DOOR LH WIRE AND COWL WIRE (LEFT KICK PANEL)
BN2		
BO1	36	FRONT DOOR RH WIRE AND COWL WIRE (RIGHT KICK PANEL)
BR1	36	REAR DOOR LH WIRE AND FLOOR WIRE (LEFT CENTER PILLAR)
BT1	36	REAR DOOR RH WIRE AND FLOOR NO. 2 WIRE (RIGHT CENTER PILLAR)
BV1	36	LUGGAGE ROOM NO. 1 WIRE AND FLOOR WIRE (LEFT QUARTER PANEL INNER)
BW1	36	BACK DOOR NO. 1 WIRE AND LUGGAGE ROOM NO. 1 WIRE (LEFT REAR SIDE OF ROOF)
BX1	38	BACK DOOR NO. 1 WIRE AND BACK DOOR NO. 2 WIRE (BACK DOOR LEFT)

▽ : GROUND POINTS

CODE	SEE PAGE	GROUND POINTS LOCATION
ID	32	LEFT KICK PANEL
IE	32	RIGHT KICK PANEL

: SPLICE POINTS

CODE	SEE PAGE	WIRE HARNESS WITH SPLICE POINTS	CODE	SEE PAGE	WIRE HARNESS WITH SPLICE POINTS
E23	30	COWL WIRE	B 2	38	FRONT DOOR LH WIRE
I 3	34		B 3		
I 6			B 4		
I 8			B 5		
I12			B 6	38	FRONT DOOR RH WIRE
I13			B 7		
I15			B13	38	FLOOR WIRE

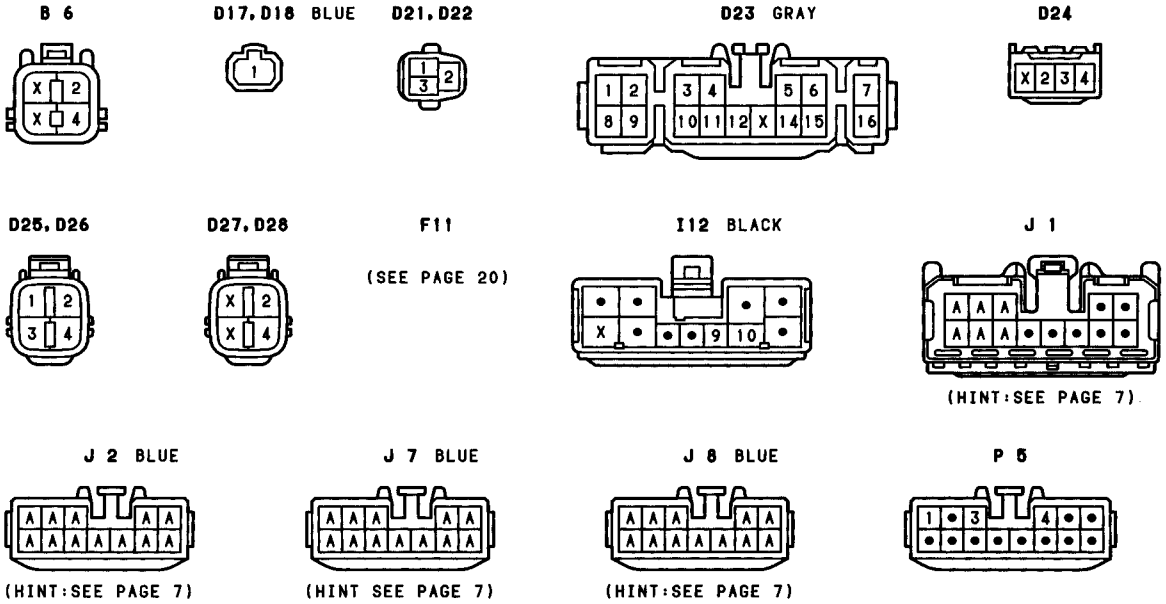

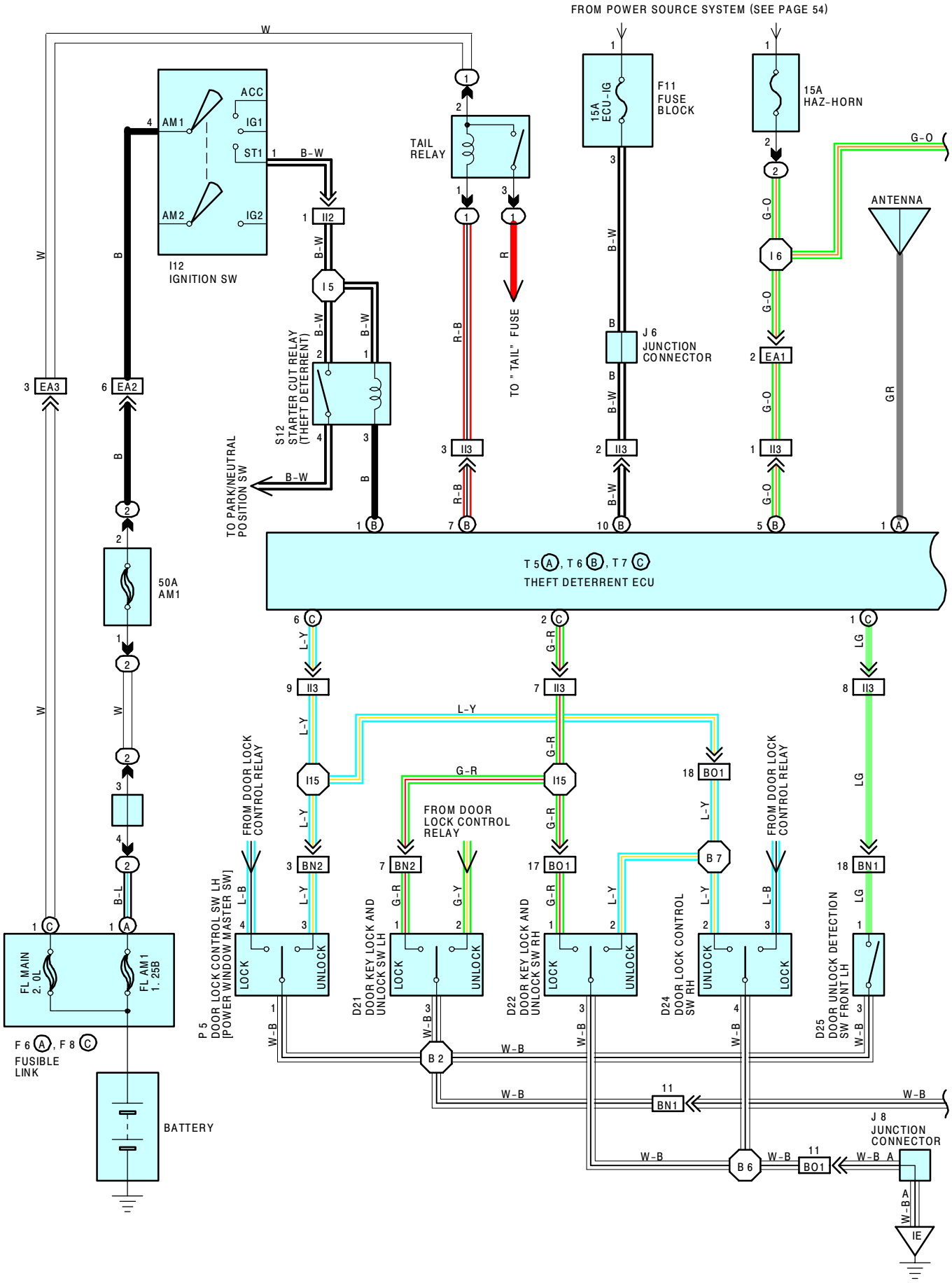
FROM POWER SOURCE SYSTEM (SEE PAGE 54)
ACC
IG1
ST1
AM1
AM2
IG2
I12
IGNITION SW
TAIL RELAY
15A ECU-IG
F11 FUSE BLOCK
15A HAZ-HORN
ANTENNA
TO " TAIL" FUSE
J 6 JUNCTION CONNECTOR
S12 STARTER CUT RELAY (THEFT DETERRENT)
TO PARK/NEUTRAL POSITION SW
50A AM1
T 5 (A), T 6 (B), T 7 (C)
THEFT DETERRENT ECU
FROM DOOR LOCK CONTROL RELAY
FROM DOOR LOCK CONTROL RELAY
FROM DOOR LOCK CONTROL RELAY
P 5 DOOR LOCK CONTROL SW LH [POWER WINDOW MASTER SW]
D21 DOOR KEY LOCK AND UNLOCK SW LH
D22 DOOR KEY LOCK AND UNLOCK SW RH
D24 DOOR LOCK CONTROL SW RH
D25 DOOR UNLOCK DETECTION SW FRONT LH
LOCK
UNLOCK
FL MAIN 2. 0L
FL AM1 1. 25B
F 6 (A), F 8 (C)
FUSIBLE LINK
BATTERY
J 8 JUNCTION CONNECTOR
IE

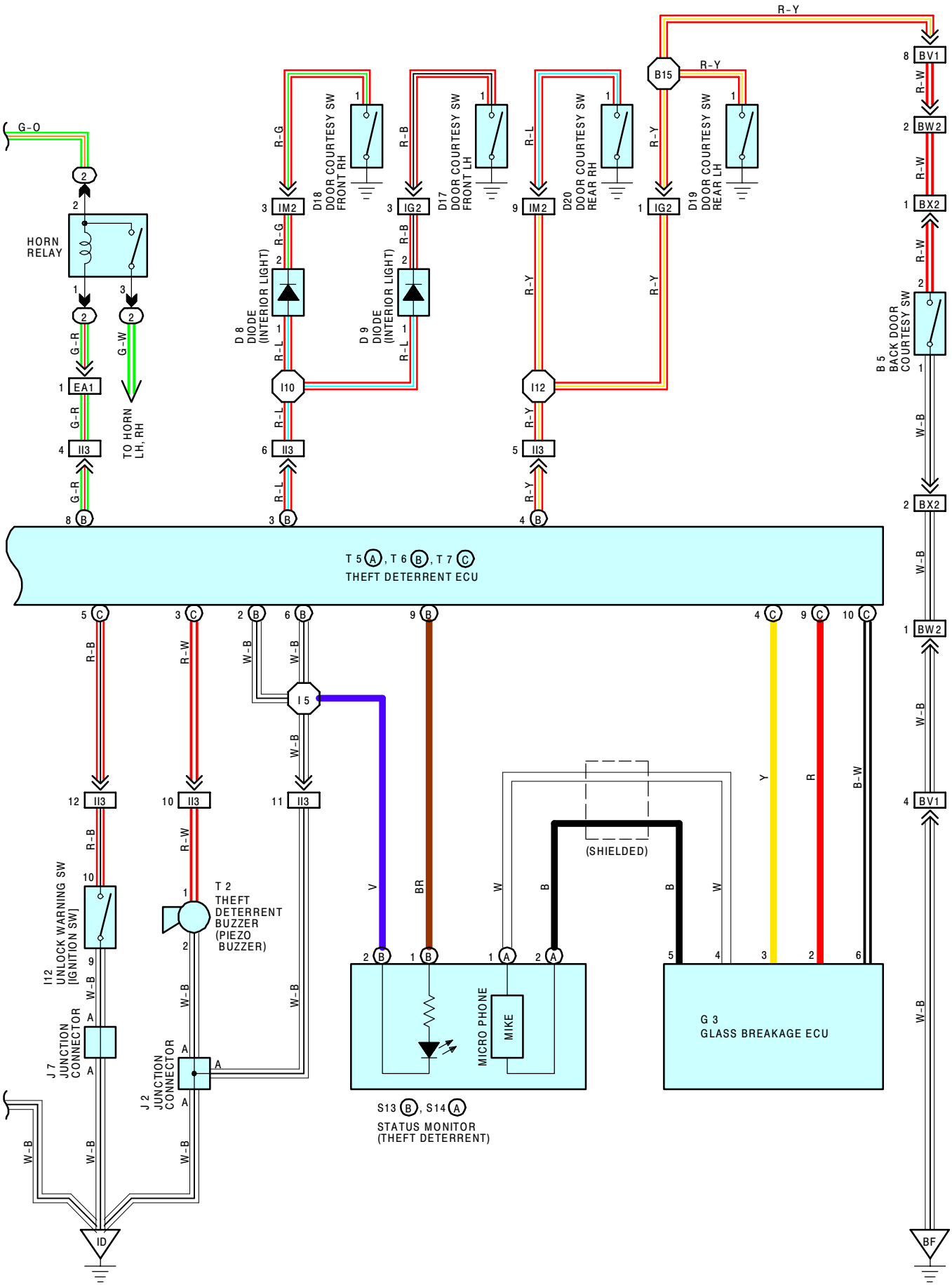
G-O
HORN RELAY
G-R
G-W
TO HORN LH, RH
EA1
II3
R-G
IM2
D18 DOOR COURTESY SW FRONT RH
D 8 DIODE (INTERIOR LIGHT)
I10
R-B
IG2
D17 DOOR COURTESY SW FRONT LH
D 9 DIODE (INTERIOR LIGHT)
R-L
D20 DOOR COURTESY SW REAR RH
I12
R-Y
B15
D19 DOOR COURTESY SW REAR LH
BV1
R-W
BW2
BX2
B 5 BACK DOOR COURTESY SW
W-B
T 5 (A), T 6 (B), T 7 (C)
THEFT DETERRENT ECU
I 5
I12 UNLOCK WARNING SW [IGNITION SW]
J 7 JUNCTION CONNECTOR
T 2 THEFT DETERRENT BUZZER (PIEZO BUZZER)
J 2 JUNCTION CONNECTOR
V
BR
W
B
(SHIELDED)
Y
R
B-W
MICRO PHONE
MIKE
S13 (B), S14 (A)
STATUS MONITOR (THEFT DETERRENT)
G 3
GLASS BREAKAGE ECU
ID
BF

SERVICE HINTS

B 5 BACK DOOR COURTESY SW
2–1 : CLOSED WITH THE BACK DOOR OPENED
D17, D18, D19, D20 DOOR COURTESY SW FRONT LH, RH, REAR LH, RH
1–GROUND : CONTINUITY WITH EACH OF THE DOOR OPENED
D21, D22 DOOR COURTESY SW FRONT LH, RH, REAR LH, RH
2–3 : CLOSED WITH THE DOOR KEY CYLINDER UNLOCKED WITH THE KEY
1–3 : CLOSED WITH THE DOOR KEY CYLINDER LOCKED WITH THE KEY
D24 DOOR COURTESY SW FRONT LH, RH, REAR LH, RH
3–4 : CLOSED WITH THE DOOR LOCK CONTROL SW RH AT **UNLOCK** POSITION
2–4 : CLOSED WITH THE DOOR LOCK CONTROL SW RH AT **LOCK** POSITION
D25 DOOR UNLOCK DETECTION SW FRONT LH
1–3 : CLOSED WITH THE DOOR UNLOCK DETECTION SW LH AT **UNLOCK** POSITION
P 5 DOOR LOCK CONTROL SW LH [POWER WINDOW MASTER SW]
3–1 : CLOSED WITH THE DOOR LOCK CONTROL SW AT **UNLOCK** POSITION
2–4 : CLOSED WITH THE DOOR LOCK CONTROL SW AT **LOCK** POSITION
T 5 (A), T 6 (B), T 7 (C) THEFT DETERRENT ECU
(B) 1–GROUND : APPROX. **12** VOLTS WITH THE IGNITION SW AT **ST** POSITION
(B) 2, **(B)** 6–GROUND : ALWAYS CONTINUITY
(B) 3–GROUND : APPROX. **12** VOLTS WITH THE FRONT DOOR LH OR RH OPENED
(B) 4–GROUND : APPROX. **12** VOLTS WITH THE REAR DOOR LH, RH OR BACK DOOR OPENED OR BACK DOOR LOCK AT **UNLOCK** POSITION
(B) 5, **(B)** 7, **(B)** 8–GROUND : ALWAYS APPROX. **12** VOLTS
(B) 10–GROUND : APPROX. **12** VOLTS WITH THE IGNITION SW AT **ACC** OR **ON** POSITION
(C) 1–GROUND : CONTINUITY WITH THE FRONT DOOR TO **UNLOCK** POSITION
(C) 2–GROUND : CONTINUITY WITH THE DOOR KEY CYLINDER LOCKED WITH THE KEY
(C) 6–GROUND : CONTINUITY WITH THE DOOR LOCK CONTROL SW LH OR RH TO **UNLOCK** POSITION OR FRONT DOOR RH KEY CYLINDER UNLOCKED WITH THE KEY

○ : PARTS LOCATION

CODE	SEE PAGE	CODE		SEE PAGE	CODE		SEE PAGE
B 5	26	**D25**		26	**P 5**		27
D 8	24	**F 6**	A	22	**S12**		25
D 9	24	**F 8**	C	22	**S13**	B	25
D17	26	**F11**		25	**S14**	A	25
D18	26	**G 3**		25	**T 2**		23
D19	26	**I12**		25	**T 5**	A	25
D20	26	**J 2**		25	**T 6**	B	25
D21	26	**J 6**		25	**T 7**	C	25
D22	26	**J 7**		25			
D24	26	**J 8**		25			

⬭ : RELAY BLOCKS

CODE	SEE PAGE	RELAY BLOCKS (RELAY BLOCK LOCATION)
1	20	R/B NO. 1 (LEFT KICK PANEL)
2	18	R/B NO. 2 (FRONT SIDE OF LEFT FENDER)

▭ : CONNECTOR JOINING WIRE HARNESS AND WIRE HARNESS

CODE	SEE PAGE	JOINING WIRE HARNESS AND WIRE HARNESS (CONNECTOR LOCATION)
EA1	30	COWL WIRE AND ENGINE ROOM MAIN WIRE (LEFT FENDER)
EA2		
EA3		
IG2	32	COWL WIRE AND FLOOR WIRE (LEFT KICK PANEL)
II2	32	SECURITY WIRE AND COWL WIRE (LEFT KICK PANEL)
II3	32	COWL WIRE AND SECURITY WIRE (LEFT KICK PANEL)
IM2	34	COWL WIRE AND FLOOR NO. 2 WIRE (RIGHT KICK PANEL)
BN1	36	FRONT DOOR LH WIRE AND COWL WIRE (LEFT KICK PANEL)
BN2		
BO1	36	FRONT DOOR RH WIRE AND COWL WIRE (RIGHT KICK PANEL)
BV1	36	LUGGAGE ROOM NO. 1 WIRE AND FLOOR WIRE (LEFT QUARTER PANEL INNER)
BW2	36	BACK DOOR NO. 1 WIRE AND LUGGAGE ROOM NO. 1 WIRE (LEFT REAR SIDE OF ROOF)
BX2	36	BACK DOOR NO. 1 WIRE AND BACK DOOR NO. 2 WIRE (BACK DOOR LEFT)

: GROUND POINTS

CODE	SEE PAGE	GROUND POINTS LOCATION
ID	32	LEFT KICK PANEL
IE	32	RIGHT KICK PANEL
BF	36	UNDER THE CENTER CONSOLE BOX

: SPLICE POINTS

CODE	SEE PAGE	WIRE HARNESS WITH SPLICE POINTS	CODE	SEE PAGE	WIRE HARNESS WITH SPLICE POINTS
I 5	34	SECURITY WIRE	**B 2**	38	FRONT DOOR LH WIRE
I 6	**34**	COWL WIRE	**B 6**	38	FRONT DOOR RH WIRE
I10			**B 7**		
I12			**B15**	38	FLOOR WIRE
I15					

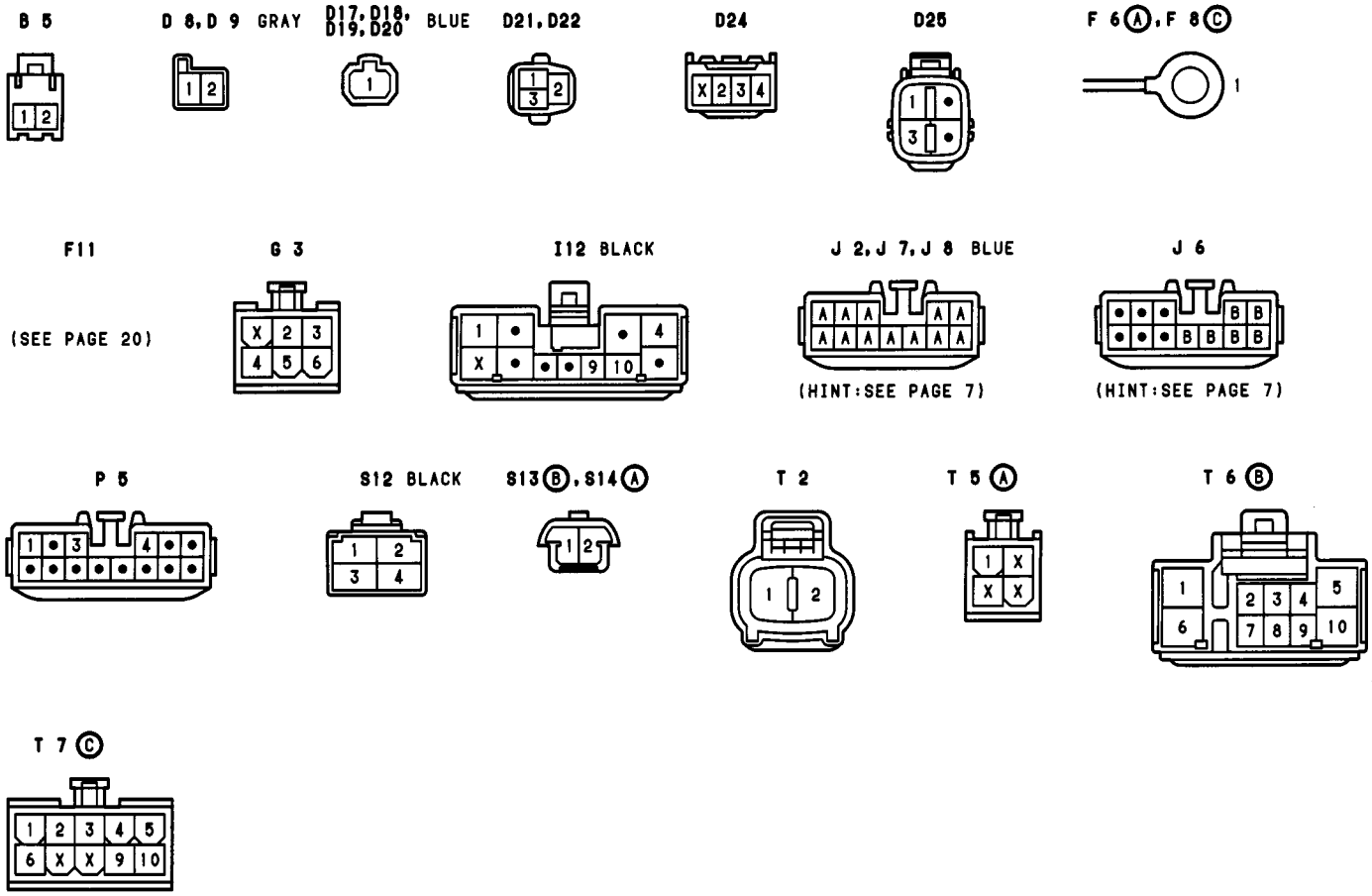

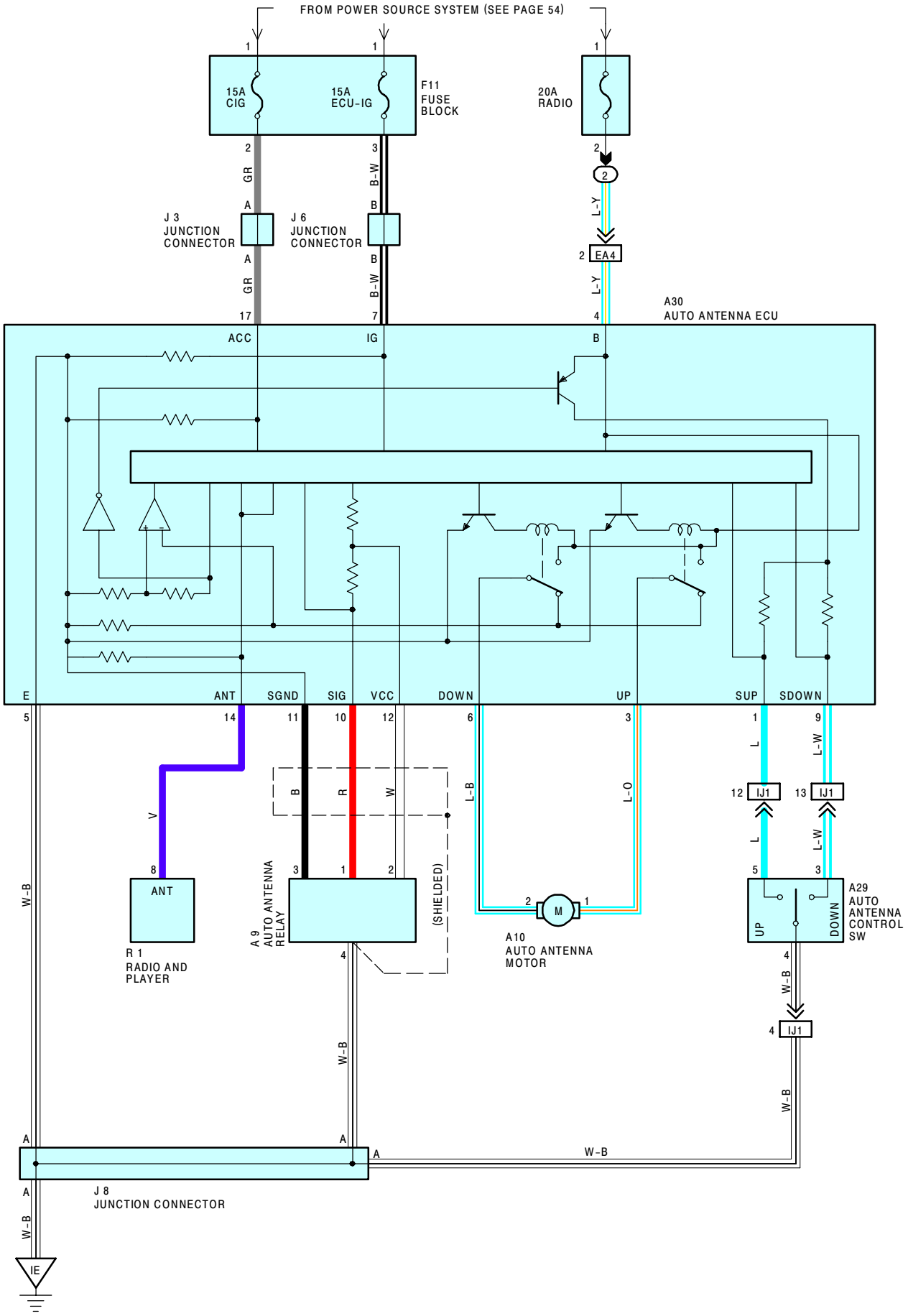
FROM POWER SOURCE SYSTEM (SEE PAGE 54)
15A CIG
15A ECU-IG
F11 FUSE BLOCK
20A RADIO
J 3 JUNCTION CONNECTOR
J 6 JUNCTION CONNECTOR
EA4
A30 AUTO ANTENNA ECU
ACC
IG
B
E
ANT
SGND
SIG
VCC
DOWN
UP
SUP
SDOWN
IJ1
ANT
R 1 RADIO AND PLAYER
A 9 AUTO ANTENNA RELAY
(SHIELDED)
A10 AUTO ANTENNA MOTOR
A29 AUTO ANTENNA CONTROL SW
J 8 JUNCTION CONNECTOR
IE

SERVICE HINTS

A30 AUTO ANTENNA ECU

8–GROUND : ALWAYS APPROX. **12** VOLTS
7–GROUND : APPROX. **12** VOLTS WITH THE IGNITION SW AT **ON** POSITION
17–GROUND : APPROX. **12** VOLTS WITH THE IGNITION SW AT **ACC** OR **ON** POSITION
5–GROUND : ALWAYS CONTINUITY

: PARTS LOCATION

CODE	SEE PAGE	CODE	SEE PAGE	CODE	SEE PAGE
A 9	22	**A30**	24	**J 6**	25
A10	22	**F11**	25	**J 8**	25
A29	24	**J 3**	25	**R 1**	25

: RELAY BLOCKS

CODE	SEE PAGE	RELAY BLOCKS (RELAY BLOCK LOCATION)
2	18	R/B NO. 2 (FRONT SIDE OF LEFT FENDER)

: CONNECTOR JOINING WIRE HARNESS AND WIRE HARNESS

CODE	SEE PAGE	JOINING WIRE HARNESS AND WIRE HARNESS (CONNECTOR LOCATION)
EA4	30	COWL WIRE AND ENGINE ROOM MAIN WIRE (RIGHT FENDER)
IJ1	34	COWL WIRE AND INSTRUMENT PANEL WIRE (INSTRUMENT PANEL CENTER)

: GROUND POINTS

CODE	SEE PAGE	GROUND POINTS LOCATION
IE	32	RIGHT KICK PANEL

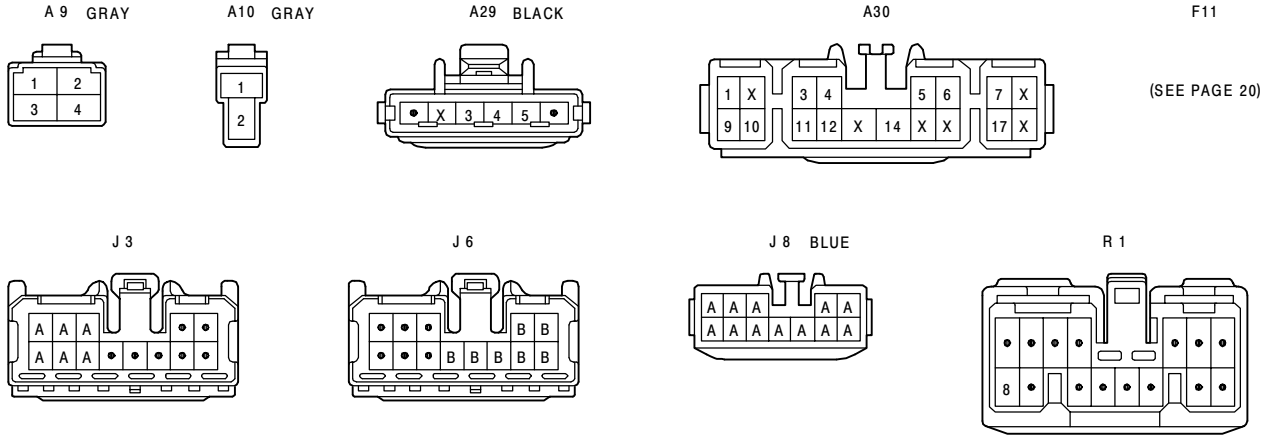

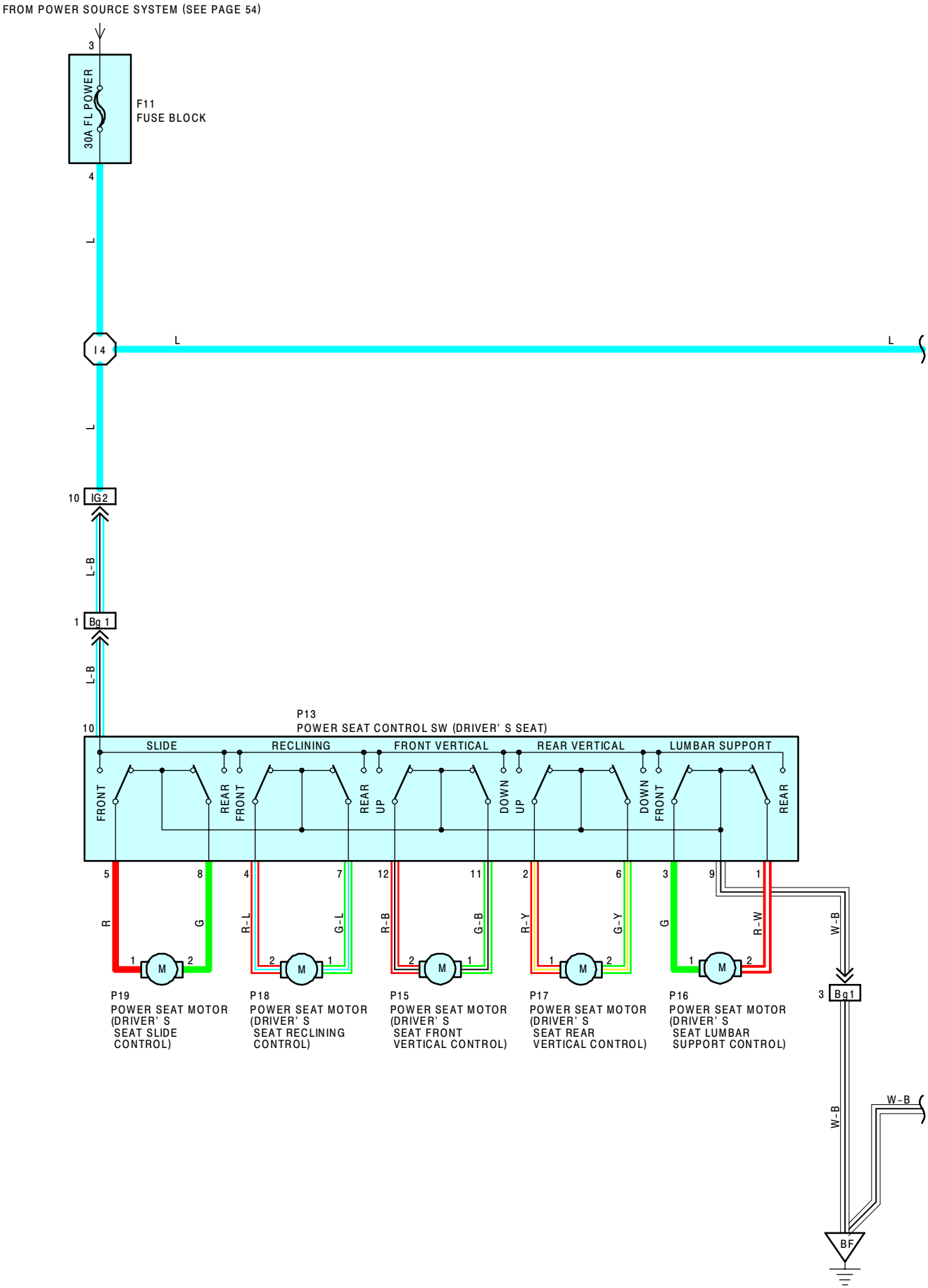
FROM POWER SOURCE SYSTEM (SEE PAGE 54)
3
30A FL POWER
F11
FUSE BLOCK
4
L
I 4
L
L
L
10
IG2
L-B
1
Bg 1
L-B
10
P13
POWER SEAT CONTROL SW (DRIVER' S SEAT)
SLIDE
RECLINING
FRONT VERTICAL
REAR VERTICAL
LUMBAR SUPPORT
FRONT
REAR
FRONT
REAR
UP
DOWN
UP
DOWN
FRONT
REAR
5
8
4
7
12
11
2
6
3
9
1
R
G
R-L
G-L
R-B
G-B
R-Y
G-Y
G
R-W
W-B
M
P19
POWER SEAT MOTOR
(DRIVER' S
SEAT SLIDE
CONTROL)
P18
POWER SEAT MOTOR
(DRIVER' S
SEAT RECLINING
CONTROL)
P15
POWER SEAT MOTOR
(DRIVER' S
SEAT FRONT
VERTICAL CONTROL)
P17
POWER SEAT MOTOR
(DRIVER' S
SEAT REAR
VERTICAL CONTROL)
P16
POWER SEAT MOTOR
(DRIVER' S
SEAT LUMBAR
SUPPORT CONTROL)
3
Bg1
W-B
W-B
BF

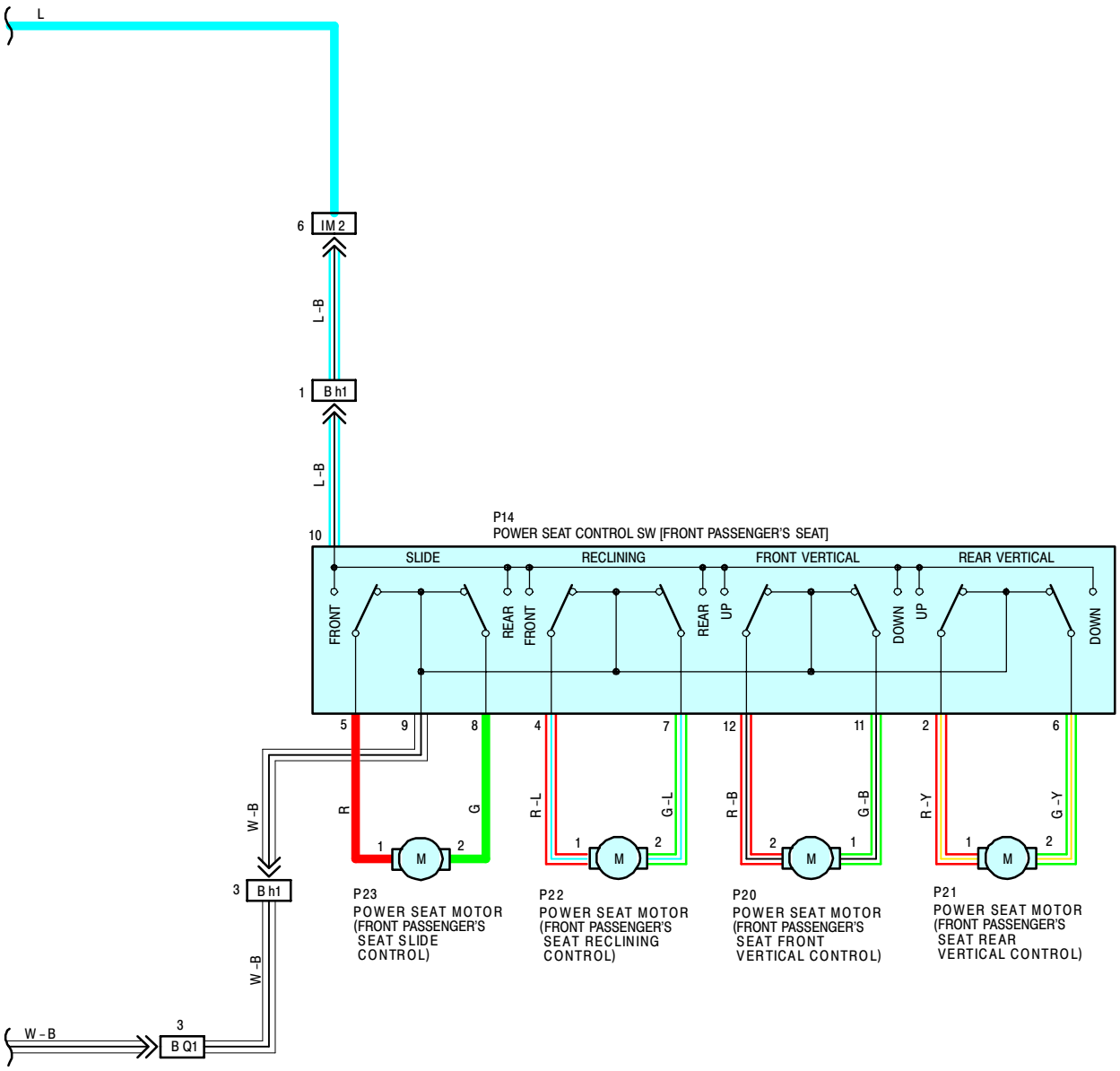
L
6
IM 2
L-B
1
B h1
L-B
10
P14
POWER SEAT CONTROL SW [FRONT PASSENGER'S SEAT]
SLIDE
RECLINING
FRONT VERTICAL
REAR VERTICAL
FRONT
REAR
FRONT
REAR
UP
DOWN
UP
DOWN
5
9
8
4
7
12
11
2
6
R
G
R-L
G-L
R-B
G-B
R-Y
G-Y
W-B
3
B h1
W-B
W-B
3
B Q1
M
P23
POWER SEAT MOTOR
(FRONT PASSENGER'S
SEAT SLIDE
CONTROL)
P22
POWER SEAT MOTOR
(FRONT PASSENGER'S
SEAT RECLINING
CONTROL)
P20
POWER SEAT MOTOR
(FRONT PASSENGER'S
SEAT FRONT
VERTICAL CONTROL)
P21
POWER SEAT MOTOR
(FRONT PASSENGER'S
SEAT REAR
VERTICAL CONTROL)

SERVICE HINTS

P13 POWER SEAT CONTROL SW (DRIVER'S SEAT)

10–5 : CLOSED WITH THE DRIVER'S SEAT AT FRONT SLIDE OPERATION
10–8 : CLOSED WITH THE DRIVER'S SEAT AT REAR SLIDE OPERATION
10–4 : CLOSED WITH THE DRIVER'S SEAT AT FRONT RECLINING OPERATION
10–7 : CLOSED WITH THE DRIVER'S SEAT AT REAR RECLINING OPERATION
10–12 : CLOSED WITH THE DRIVER'S SEAT AT FRONT VERTICAL UP OPERATION
10–11 : CLOSED WITH THE DRIVER'S SEAT AT FRONT VERTICAL DOWN OPERATION
10–2 : CLOSED WITH THE DRIVER'S SEAT AT REAR VERTICAL UP OPERATION
10–6 : CLOSED WITH THE DRIVER'S SEAT AT REAR VERTICAL DOWN OPERATION
10–3 : CLOSED WITH THE DRIVER'S SEAT AT LUMBAR SUPPORT FRONT OPERATION
10–1 : CLOSED WITH THE DRIVER'S SEAT AT LUMBAR SUPPORT REAR OPERATION
9–GROUND : ALWAYS CONTINUITY

P14 POWER SEAT CONTROL SW (FRONT PASSENGER'S SEAT)

10–5 : CLOSED WITH THE FRONT PASSENGER'S SEAT AT FRONT SLIDE OPERATION
10–8 : CLOSED WITH THE FRONT PASSENGER'S SEAT AT REAR SLIDE OPERATION
10–4 : CLOSED WITH THE FRONT PASSENGER'S SEAT AT FRONT RECLINING OPERATION
10–7 : CLOSED WITH THE FRONT PASSENGER'S SEAT AT REAR RECLINING OPERATION
10–12 : CLOSED WITH THE FRONT PASSENGER'S SEAT AT FRONT VERTICAL UP OPERATION
10–11 : CLOSED WITH THE FRONT PASSENGER'S SEAT AT FRONT VERTICAL DOWN OPERATION
10–2 : CLOSED WITH THE FRONT PASSENGER'S SEAT AT REAR VERTICAL UP OPERATION
10–6 : CLOSED WITH THE FRONT PASSENGER'S SEAT AT REAR VERTICAL DOWN OPERATION
9–GROUND : ALWAYS CONTINUITY

○ : PARTS LOCATION

CODE	SEE PAGE	CODE	SEE PAGE	CODE	SEE PAGE
F11	25	**P16**	28	**P20**	28
P13	28	**P17**	28	**P21**	28
P14	28	**P18**	28	**P22**	28
P15	28	**P19**	28	**P23**	28

▭ : CONNECTOR JOINING WIRE HARNESS AND WIRE HARNESS

CODE	SEE PAGE	JOINING WIRE HARNESS AND WIRE HARNESS (CONNECTOR LOCATION)
IG2	32	COWL WIRE AND FLOOR WIRE (LEFT KICK PANEL)
IM2	34	COWL WIRE AND FLOOR NO. 2 WIRE (RIGHT KICK PANEL)
BQ1	36	FLOOR NO. 2 WIRE AND FLOOR WIRE (UNDER THE CENTER CONSOLE)
Bg1	40	FLOOR NO. 1 WIRE AND SEAT NO. 1 LH WIRE (UNDER THE DRIVER'S SEAT)
Bh1	40	FLOOR NO. 2 WIRE AND SEAT NO. 1 RH WIRE (UNDER THE PASENGER'S SEAT)

▽ : GROUND POINTS

CODE	SEE PAGE	GROUND POINTS LOCATION
BF	36	UNDER THE CENTER CONSOLE BOX

⬡ : SPLICE POINTS

CODE	SEE PAGE	WIRE HARNESS WITH SPLICE POINTS	CODE	SEE PAGE	WIRE HARNESS WITH SPLICE POINTS
I 4	34	COWL WIRE			

F11

(SEE PAGE 20)

P13

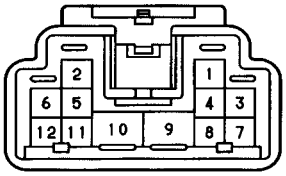

P14

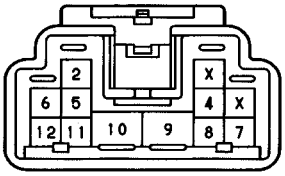

P15, P20 BLUE

P16

P17, P21 ORANGE

P18, P19
P22, P23

LIGHT AUTO TURN OFF

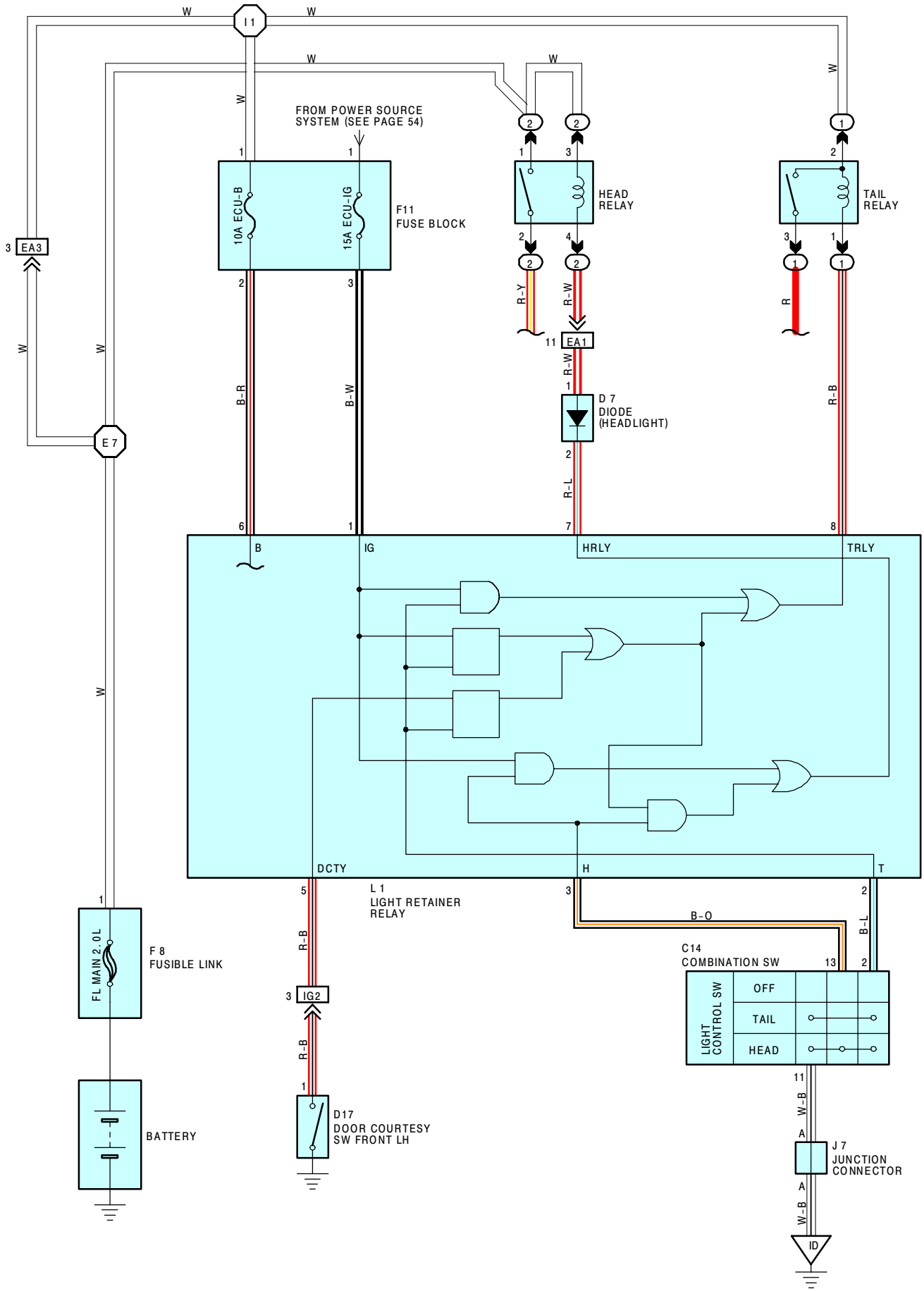

SYSTEM OUTLINE

WITH THE IGNITION SW TURNED ON, CURRENT FLOWS TO **TERMINAL 1** OF THE LIGHT RETAINER RELAY THROUGH THE **ECU–IG** FUSE.

VOLTAGE IS APPLIED AT ALL TIMES TO **TERMINAL 8** OF THE LIGHT RETAINER RELAY THROUGH THE TAIL RELAY (COIL SIDE), AND TO **TERMINAL 7** OF THE LIGHT RETAINER RELAY THROUGH THE HEAD RELAY (COIL SIDE).

1. NORMAL LIGHTING OPERATION

<TURN TAILLIGHT ON>

WITH THE LIGHT CONTROL SW TURNED TO **TAIL** POSITION, A SIGNAL IS INPUT INTO **TERMINAL 2** OF THE LIGHT RETAINER RELAY. DUE TO THIS SIGNAL, THE CURRENT FLOW TO **TERMINAL 8** OF THE RELAY FLOWS THROUGH **TERMINAL 2** TO **TERMINAL 2** OF THE LIGHT CONTROL SW → **TERMINAL 11** → **GROUND**, CAUSING TAILLIGHTS TO TURN ON.

<TURN HEADLIGHT ON>

WITH THE LIGHT CONTROL SW TURNED TO **HEAD** POSITION, A SIGNAL IS INPUT INTO **TERMINAL 3** OF THE LIGHT RETAINER RELAY. DUE TO THIS SIGNAL, THE CURRENT FLOW TO **TERMINAL 7** OF THE RELAY FLOWS THROUGH **TERMINAL 3** TO **TERMINAL 13** OF THE LIGHT CONTROL SW → **TERMINAL 11** → **GROUND**, CAUSING HEADLIGHTS AND TAILLIGHTS TO TURN ON. THE TAILLIGHT CIRCUIT IS SAME AS ABOVE (SEE <TURN TAILLIGHT ON>).

2. LIGHT AUTO TURN OFF OPERATION

WITH LIGHTS ON AND THE IGNITION SW TURNED OFF (INPUT SIGNAL GOES TO **TERMINAL 1** OF THE LIGHT RETAINER RELAY), WHEN THE DRIVER'S DOOR IS OPENED (INPUT SIGNAL GOES TO **TERMINAL 5** OF THE LIGHT RETAINER RELAY), THE RELAY OPERATES, AND THE CURRENT IS CUT OFF WHICH FLOWS FROM **TERMINAL 8** OF THE RELAY TO **TERMINAL 2** AND FROM **TERMINAL 7** OF THE RELAY TO **TERMINAL 3.** AS A RESULT, ALL LIGHTS ARE TURNED OFF AUTOMATICALLY.

SERVICE HINTS

L 1 LIGHT RETAINER RELAY

1–GROUND : APPROX. **12** VOLTS WITH THE IGNITION SW AT **ON** POSITION
6–GROUND : ALWAYS APPROX. **12** VOLTS
5–GROUND : CONTINUITY WITH THE DRIVER'S DOOR OPENED
7–GROUND : ALWAYS APPROX. **12** VOLTS
8–GROUND : ALWAYS APPROX. **12** VOLTS
3–GROUND : CONTINUITY WITH THE LIGHT CONTROL SW AT **HEAD** POSITION
2–GROUND : CONTINUITY WITH THE LIGHT CONTROL SW AT **TAIL** OR **HEAD** POSITION

: PARTS LOCATION

CODE	SEE PAGE	CODE	SEE PAGE	CODE	SEE PAGE
C14	24	**F 8**	22	**L 1**	25
D 7	24	**F11**	25		
D17	26	**J 7**	25		

: RELAY BLOCKS

CODE	SEE PAGE	RELAY BLOCKS (RELAY BLOCK LOCATION)
1	20	R/B NO. 1 (LEFT KICK PANEL)
2	18	R/B NO. 2 (FRONT SIDE OF LEFT FENDER)

: CONNECTOR JOINING WIRE HARNESS AND WIRE HARNESS

CODE	SEE PAGE	JOINING WIRE HARNESS AND WIRE HARNESS (CONNECTOR LOCATION)
EA1	30	COWL WIRE AND ENGINE ROOM MAIN WIRE (LEFT FENDER)
EA3		
IG2	32	COWL WIRE AND FLOOR WIRE (LEFT KICK PANEL)

: SPLICE POINTS

CODE	SEE PAGE	WIRE HARNESS WITH SPLICE POINTS	CODE	SEE PAGE	WIRE HARNESS WITH SPLICE POINTS
E 7	30	ENGINE ROOM MAIN WIRE	**I 1**	34	COWL WIRE

LIGHT AUTO TURN OFF

C14 BLACK

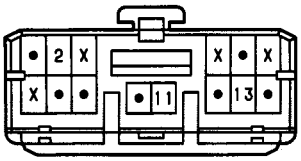

D 7 ORANGE

D17 BLUE

F 8

F11

(SEE PAGE 20)

J 7 BLUE

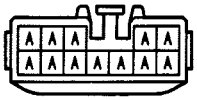

(HINT:SEE PAGE 7)

L 1

C15 BLACK

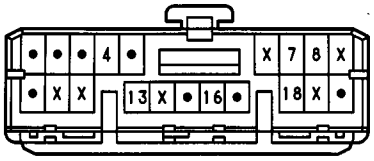

D 6 GRAY

F 3 GRAY

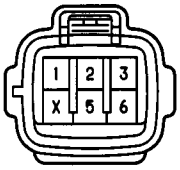

F11

(SEE PAGE 20)

J 7 BLUE

(HINT:SEE PAGE 7)

J 8 BLUE

(HINT:SEE PAGE 7)

W 2 BLACK

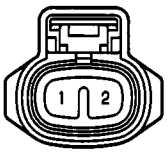

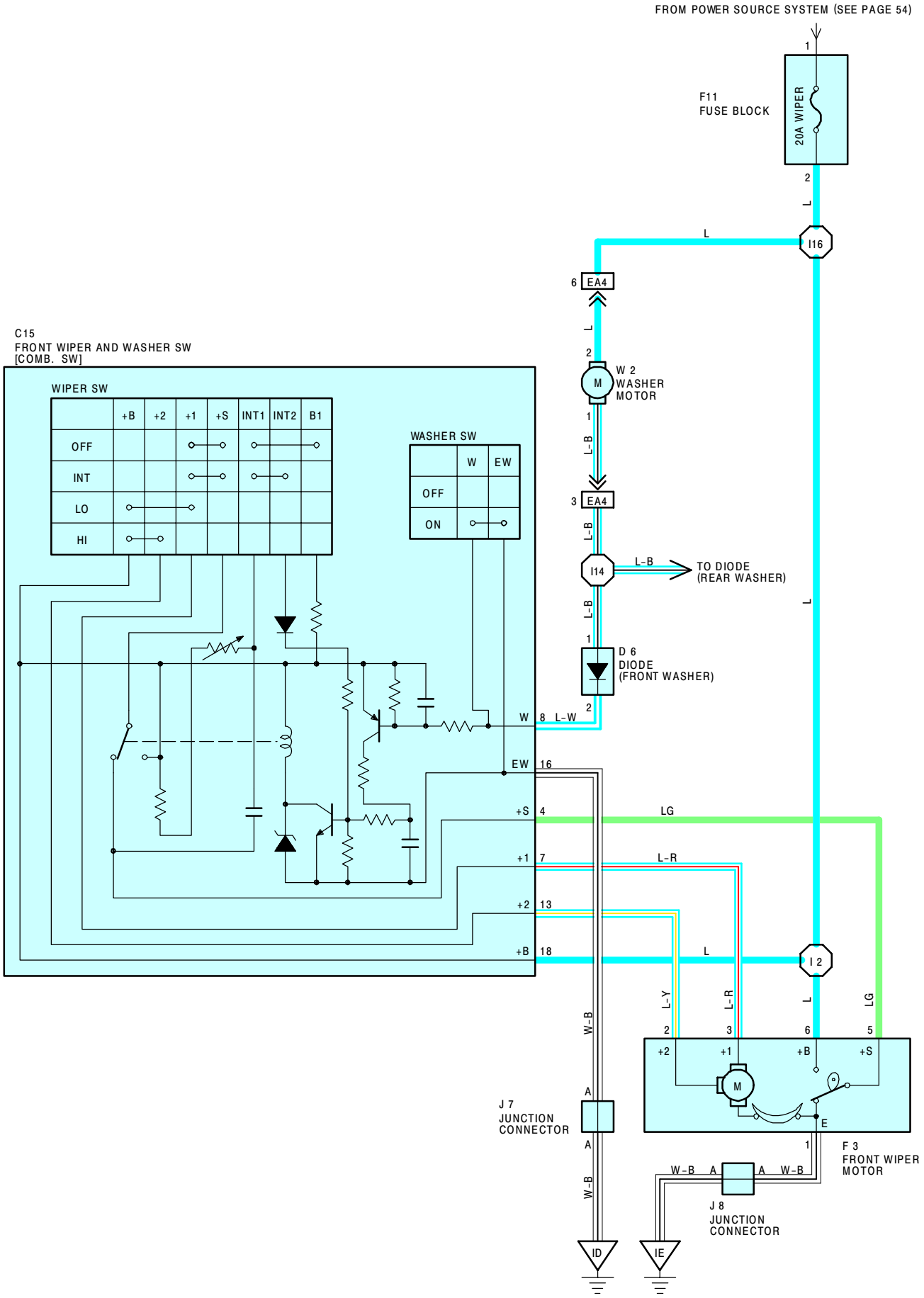
FROM POWER SOURCE SYSTEM (SEE PAGE 54)
F11
FUSE BLOCK
20A WIPER
I16
EA4
W 2
WASHER
MOTOR
C15
FRONT WIPER AND WASHER SW
[COMB. SW]
WIPER SW
+B
+2
+1
+S
INT1
INT2
B1
OFF
INT
LO
HI
WASHER SW
W
EW
OFF
ON
I14
TO DIODE
(REAR WASHER)
D 6
DIODE
(FRONT WASHER)
W
EW
+S
+1
+2
+B
LG
L-R
L-Y
L-B
L-W
W-B
J 7
JUNCTION
CONNECTOR
I 2
F 3
FRONT WIPER
MOTOR
J 8
JUNCTION
CONNECTOR
ID
IE

SYSTEM OUTLINE

WITH THE IGNITION SW TURNED ON, CURRENT FLOWS TO **TERMINAL 18** OF THE FRONT WIPER AND WASHER SW, **TERMINAL 2** OF THE WASHER MOTOR AND **TERMINAL 6** OF THE FRONT WIPER MOTOR FROM THE **WIPER** FUSE.

1. LOW SPEED POSITION

WITH THE WIPER SW TURNED TO **LO** POSITION, CURRENT FLOWS FROM **TERMINAL 18** OF THE FRONT WIPER AND WASHER SW TO **TERMINAL 7** → **TERMINAL 3** OF THE FRONT WIPER MOTOR → **TERMINAL 1** → **GROUND,** CAUSING THE WIPER MOTOR TO RUN AT LOW SPEED.

2. HIGH SPEED POSITION

WITH THE WIPER SW TURNED TO **HI** POSITION, CURRENT FLOWS FROM **TERMINAL 18** OF THE FRONT WIPER AND WASHER SW TO **TERMINAL 13** → **TERMINAL 2** OF THE FRONT WIPER MOTOR → **TERMINAL 1** → **GROUND**, CAUSING THE WIPER MOTOR TO RUN AT HIGH SPEED.

3. INT POSITION

WITH THE WIPER SW TURNED TO **INT** POSITION, THE RELAY OPERATES AND THE CURRENT WHICH IS CONNECTED BY RELAY FUNCTION FLOWS FROM **TERMINAL 18** OF THE FRONT WIPER AND WASHER SW TO **TERMINAL 16** → **GROUND**. THIS FLOW OF THE CURRENT OPERATES THE INTERMITTENT CIRCUIT AND THE CURRENT FLOWS FROM **TERMINAL 18** OF THE FRONT WIPER AND WASHER SW TO **TERMINAL 7** → **TERMINAL 3** OF THE FRONT WIPER MOTOR → **TERMINAL 1** → **GROUND** AND THE WIPER FUNCTIONS.

THE INTERMITTENT OPERATION IS CONTROLLED BY A CONDENSER'S CHARGED AND DISCHARGED FUNCTION INSTALLED IN THE RELAY.

4. WASHER CONTINUOUS OPERATION

WITH THE WASHER SW TURNED TO ON, CURRENT FLOWS THROUGH **TERMINAL 2** OF THE WASHER MOTOR TO **TERMINAL 1** → **TERMINAL 8** OF THE FRONT WIPER AND WASHER SW → **TERMINAL 16** → **GROUND**, CAUSING THE WASHER MOTOR TO RUN, AND WINDOW WASHER EMITS A WATER SPRAY. THIS CAUSES THE CURRENT TO FLOW TO **TERMINAL 18** OF THE FRONT WIPER AND WASHER SW → **TERMINAL 7** → **TERMINAL 3** OF THE FRONT WIPER MOTOR → **TERMINAL 1** → **GROUND.**

WHILE THE WASHER SW IS ON, WINDOW WASHER KEEPS EMITTING SPRAYS AND FRONT WIPER KEEPS FUNCTIONING.

SERVICE HINTS

C15 FRONT WIPER AND WASHER SW [COMB. SW]

16–GROUND : ALWAYS CONTINUITY
18–GROUND : APPROX. **12** VOLTS WITH THE IGNITION SW AT **ON** POSITION
7–GROUND : APPROX. **12** VOLTS WITH THE WIPER AND WASHER SW AT **LO** POSITION
APPROX. **12** VOLTS EVERY APPROX. **1** TO **10** SECONDS INTERMITTENTLY WITH THE WIPER SW AT **INT** POSITION
4–GROUND : APPROX. **12** VOLTS WITH THE IGNITION SW ON UNLESS THE WIPER MOTOR AT **STOP** POSITION
13–GROUND : APPROX. **12** VOLTS WITH THE WIPER AND WASHER SW AT **HI** POSITION

F 3 FRONT WIPER MOTOR

5–6 : CLOSED UNLESS THE WIPER MOTOR AT **STOP** POSITION

○ : PARTS LOCATION

CODE	SEE PAGE	CODE	SEE PAGE	CODE	SEE PAGE
C15	24	**F11**	25	**W 2**	23
D 6	24	**J 7**	25		
F 3	22	**J 8**	25		

▭ : CONNECTOR JOINING WIRE HARNESS AND WIRE HARNESS

CODE	SEE PAGE	JOINING WIRE HARNESS AND WIRE HARNESS (CONNECTOR LOCATION)
EA4	30	COWL WIRE AND ENGINE ROOM MAIN WIRE (RIGHT FENDER)

▽ : GROUND POINTS

CODE	SEE PAGE	GROUND POINTS LOCATION
ID	32	LEFT KICK PANEL
IE	32	RIGHT KICK PANEL

⬡ : SPLICE POINTS

CODE	SEE PAGE	WIRE HARNESS WITH SPLICE POINTS	CODE	SEE PAGE	WIRE HARNESS WITH SPLICE POINTS
I 2	34	COWL WIRE	**I16**	34	COWL WIRE
I14					

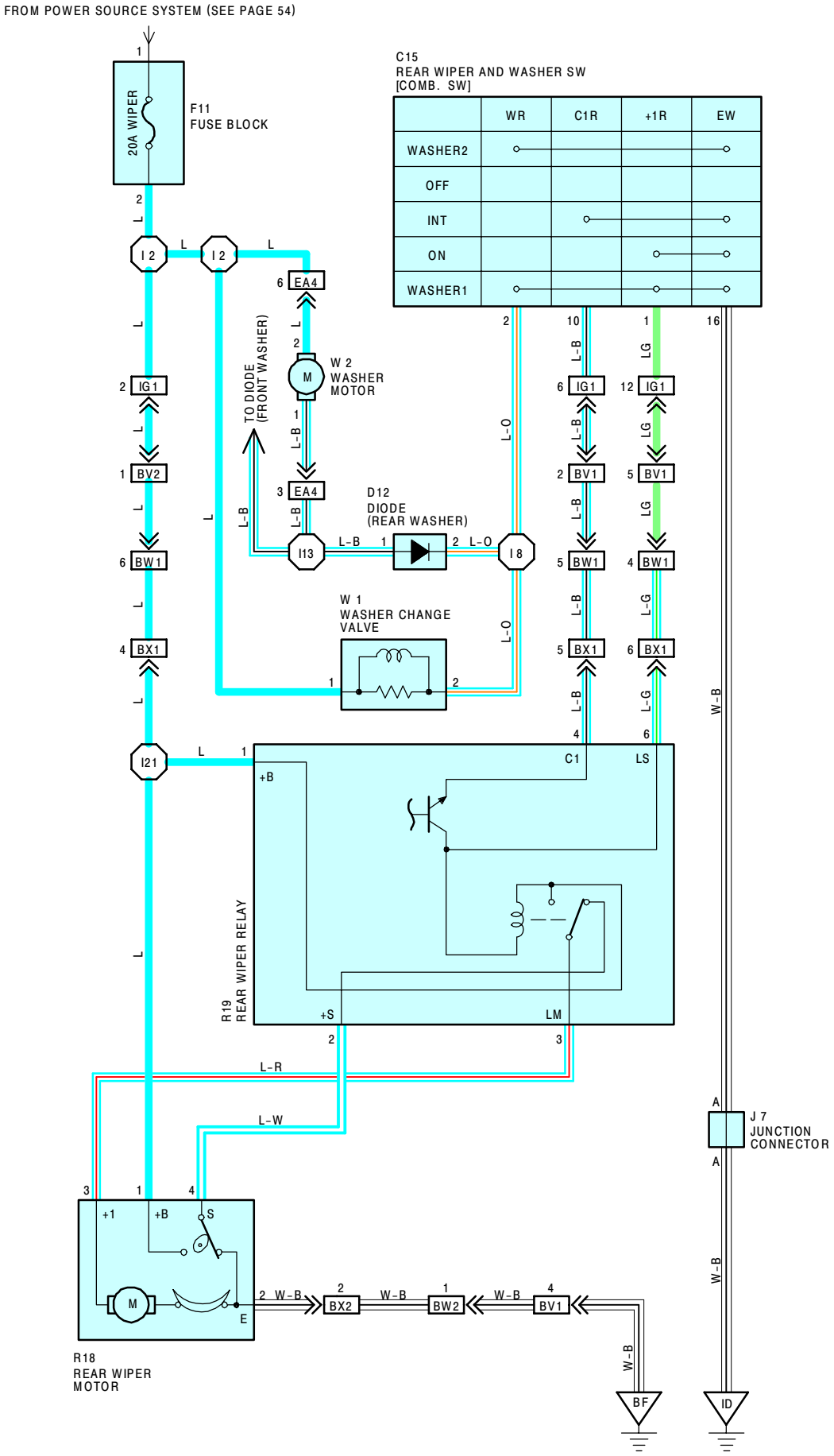
FROM POWER SOURCE SYSTEM (SEE PAGE 54)
20A WIPER
F11
FUSE BLOCK
C15
REAR WIPER AND WASHER SW
[COMB. SW]
WR
C1R
+1R
EW
WASHER2
OFF
INT
ON
WASHER1
I2
EA4
W 2
WASHER
MOTOR
TO DIODE
(FRONT WASHER)
IG1
BV2
BW1
BX1
BV1
D12
DIODE
(REAR WASHER)
I13
I8
W 1
WASHER CHANGE
VALVE
I21
+B
C1
LS
R19
REAR WIPER RELAY
+S
LM
L-R
L-W
J 7
JUNCTION
CONNECTOR
+1
S
E
BX2
BW2
R18
REAR WIPER
MOTOR
BF
ID

SYSTEM OUTLINE

WHEN THE IGNITION SW IS TURNED ON, CURRENT FLOWS TO **TERMINAL 2** OF THE WASHER MOTOR, **TERMINAL 1** OF THE WASHER CHANGE VALVE, **TERMINAL 1** OF THE REAR WIPER RELAY AND **TERMINAL 1** OF THE REAR WIPER MOTOR FROM THE **WIPER** FUSE.

1. REAR WIPER NORMAL OPERATION

WITH THE IGNITION SW TURNED ON AND THE REAR WIPER AND WASHER SW TURNED ON, THE CURRENT FROM **TERMINAL 1** OF THE REAR WIPER RELAY FLOWS TO **TERMINAL 6** OF THE RELAY → **TERMINAL 1** OF THE REAR WIPER AND WASHER SW → **TERMINAL 16** → **GROUND**. THUS, THE RELAY COIL IS ACTIVATED, AND THE CURRENT FROM **TERMINAL 1** OF THE RELAY FLOWS TO **TERMINAL 3** → **TERMINAL 3** OF THE REAR WIPER MOTOR → **TERMINAL 2** → **GROUND**, CAUSING THE MOTOR TO ROTATE TO OPERATE THE REAR WIPER.

2. REAR WIPER INTERMITTENT OPERATION

WITH THE IGNITION SW TURNED ON AND THE REAR WIPER AND WASHER SW TURNED TO **INT** POSITION, THE CURRENT FROM **TERMINAL 1** OF THE REAR WIPER RELAY FLOWS TO **TERMINAL 4** OF THE RELAY → **TERMINAL 10** OF THE REAR WIPER AND WASHER SW → **TERMINAL 16** → **GROUND**. AS A RESULT, THE RELAY OPERATES FOR APPROX. **6** – **10** SEC. , AND THE CURRENT FLOWS FROM **TERMINAL 1** OF THE REAR WIPER RELAY TO **TERMINAL 3** → **TERMINAL 3** OF THE REAR WIPER MOTOR → **TERMINAL 2** → **GROUND**, CAUSING THE MOTOR TO ROTATE TO OPERATE THE REAR WIPER. AT THIS TIME, THE CONTACT IN THE WIPER MOTOR CLOSES, AND THE CURRENT FLOWS FROM **TERMINAL 1** OF THE REAR WIPER MOTOR TO **TERMINAL 4** → **TERMINAL 2** OF THE REAR WIPER RELAY → **TERMINAL 3** → **TERMINAL 3** OF THE REAR WIPER MOTOR → **TERMINAL 2** → **GROUND.**

THUS, THE INTERMITTENT–STOP CIRCUIT OPERATES, THE CONDENSER IN THE CIRCUIT CHARGES AND THE WIPER CONTINUES TO OPERATE UNTIL REACHING THE **STOP** POSITION. AFTER THE WIPER STOPS, THE CURRENT DOES NOT FLOW TO THE INTERMITTENT–STOP CIRCUIT FROM **TERMINAL 2** OF THE RELAY, BUT THE CONDENSER DISCHARGES THE CURRENT INTO THE INTERMITTENT CIRCUIT AND THE CIRCUIT OPERATES UNTIL THE CONDENSER DISCHARGE ENDS. AS A RESULT, THIS DISCHARGE INTERVAL BECOMES THE INTERMITTENT TIME.

WHEN THE CURRENT IS DISCHARGED COMPLETELY, THE CURRENT FROM **TERMINAL 1** OF THE RELAY FLOWS TO **TERMINAL 4** → **TERMINAL 10** OF THE REAR WIPER AND WASHER SW → **TERMINAL 16** → **GROUND**.

THEN THE CURRENT FROM **TERMINAL 1** OF THE RELAY FLOWS TO **TERMINAL 3** → **TERMINAL 3** OF THE REAR WIPER MOTOR → **TERMINAL 2** → **GROUND,** ROTATING THE MOTOR. ACCORDING TO REPETITION OF THIS PROCESS, INTERMITTENT OPERATION OF THE REAR WIPER OCCURS.

3. WASHER OPERATION

WITH THE IGNITION SW TURNED ON AND THE REAR WIPER AND WASHER SW TURNED TO **ON** OR **INT** POSITION, WHEN THE WIPER SW IS PUSHED STRONGLY TOWARD THE ON OR INT SIDE, THE CURRENT FROM **TERMINAL 2** OF THE WASHER MOTOR FLOWS TO **TERMINAL 1** OF THE MOTOR → **TERMINAL 2** OF THE REAR WIPER AND WASHER SW → **TERMINAL 16** → **GROUND,** SO THAT THE WASHER MOTOR ROTATES AND THE WINDOW WASHER EMITS A WATER SPRAY, ONLY WHILE THE WIPER SW IS PRESSED. AT THE SAME TIME, THE WASHER CHANGE VALVE OPERATES.

WHEN THE CURRENT FLOWS TO THE WASHER CHANGE VALVE, THE WASHER CHANGE VALVE IS ACTIVATED AND WASHER EMITS A WATER SPRAY ON THE REAR WINDOW.

SERVICE HINTS

W 2 WASHER MOTOR

2–GROUND : APPROX. **12** VOLTS WITH THE IGNITION SW AT **ON** POSITION
1–GROUND : CONTINUITY WITH THE WASHER SW TURNED ON

R19 REAR WIPER RELAY

1–GROUND : APPROX. **12** VOLTS WITH THE IGNITION SW AT **ON** POSITION
4–GROUND : CONTINUITY WITH THE REAR WIPER SW AT **INT** POSITION
6–GROUND : CONTINUITY WITH THE REAR WIPER SW AT **ON** POSITION

REAR WIPER AND WASHER

○ : PARTS LOCATION

CODE	SEE PAGE	CODE	SEE PAGE	CODE	SEE PAGE
C15	24	**J 7**	25	**W 1**	23
D12	24	**R18**	27	**W 2**	23
F11	25	**R19**	27		

▭ : CONNECTOR JOINING WIRE HARNESS AND WIRE HARNESS

CODE	SEE PAGE	JOINING WIRE HARNESS AND WIRE HARNESS (CONNECTOR LOCATION)
EA4	30	COWL WIRE AND ENGINE ROOM MAIN WIRE (RIGHT FENDER)
IG1	32	COWL WIRE AND FLOOR WIRE (LEFT KICK PANEL)
BV1	36	LUGGAGE ROOM NO. 1 WIRE AND FLOOR WIRE (LEFT QUARTER PANEL INNER)
BV2		
BW1	36	BACK DOOR NO. 1 WIRE AND LUGGAGE ROOM NO. 1 WIRE (LEFT REAR SIDE OF ROOF)
BW2		
BX1	38	BACK DOOR NO. 1 WIRE AND BACK DOOR NO. 2 WIRE (BACK DOOR LEFT)
BX2		

▽ : GROUND POINTS

CODE	SEE PAGE	GROUND POINTS LOCATION
ID	32	LEFT KICK PANEL
BF	36	UNDER THE CENTER CONSOLE BOX

⬡ : SPLICE POINTS

CODE	SEE PAGE	WIRE HARNESS WITH SPLICE POINTS	CODE	SEE PAGE	WIRE HARNESS WITH SPLICE POINTS
I 2	34	COWL WIRE	**I13**	34	COWL WIRE
I 8			**I21**		

C15 BLACK

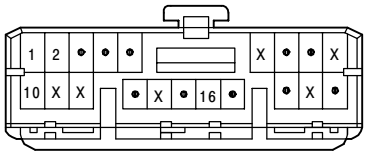

D12 GRAY

F11

(SEE PAGE 20)

J 7 BLUE

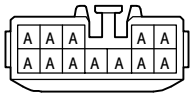

(HINT : SEE PAGE 7)

R18

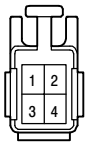

R19

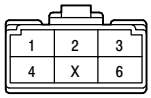

W 1 DARK GRAY

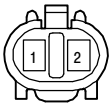

W 2 BLACK

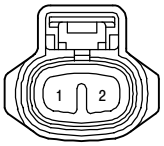

A 5 (A) BLACK

A 6 (B) GRAY

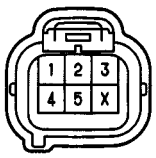

A 7 (A) GRAY

A 8 (B) GRAY

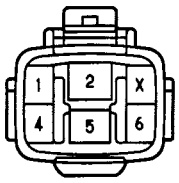

A20 (A) DARK GRAY

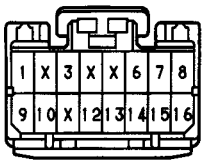

A21 (B) DARK GRAY

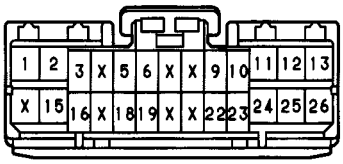

A31 GRAY

A32, A33

A34, A35

B 1 GRAY

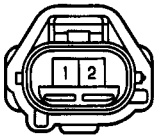

C10 (A) GRAY

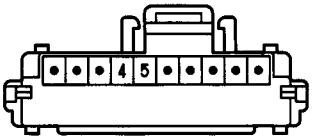

C11 (B) BLUE

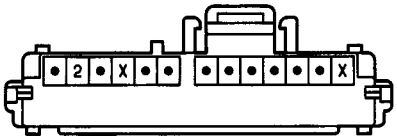

D 1 BLACK

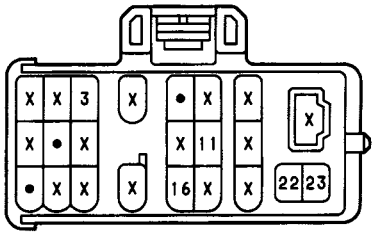

F11

(SEE PAGE 20)

J 1

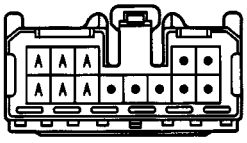

(HINT:SEE PAGE 7)

J 2 BLUE

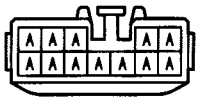

(HINT:SEE PAGE 7)

J 6

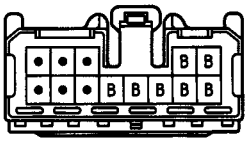

(HINT:SEE PAGE 7)

P 4

S18 BLACK

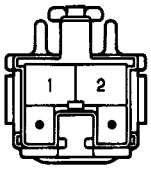

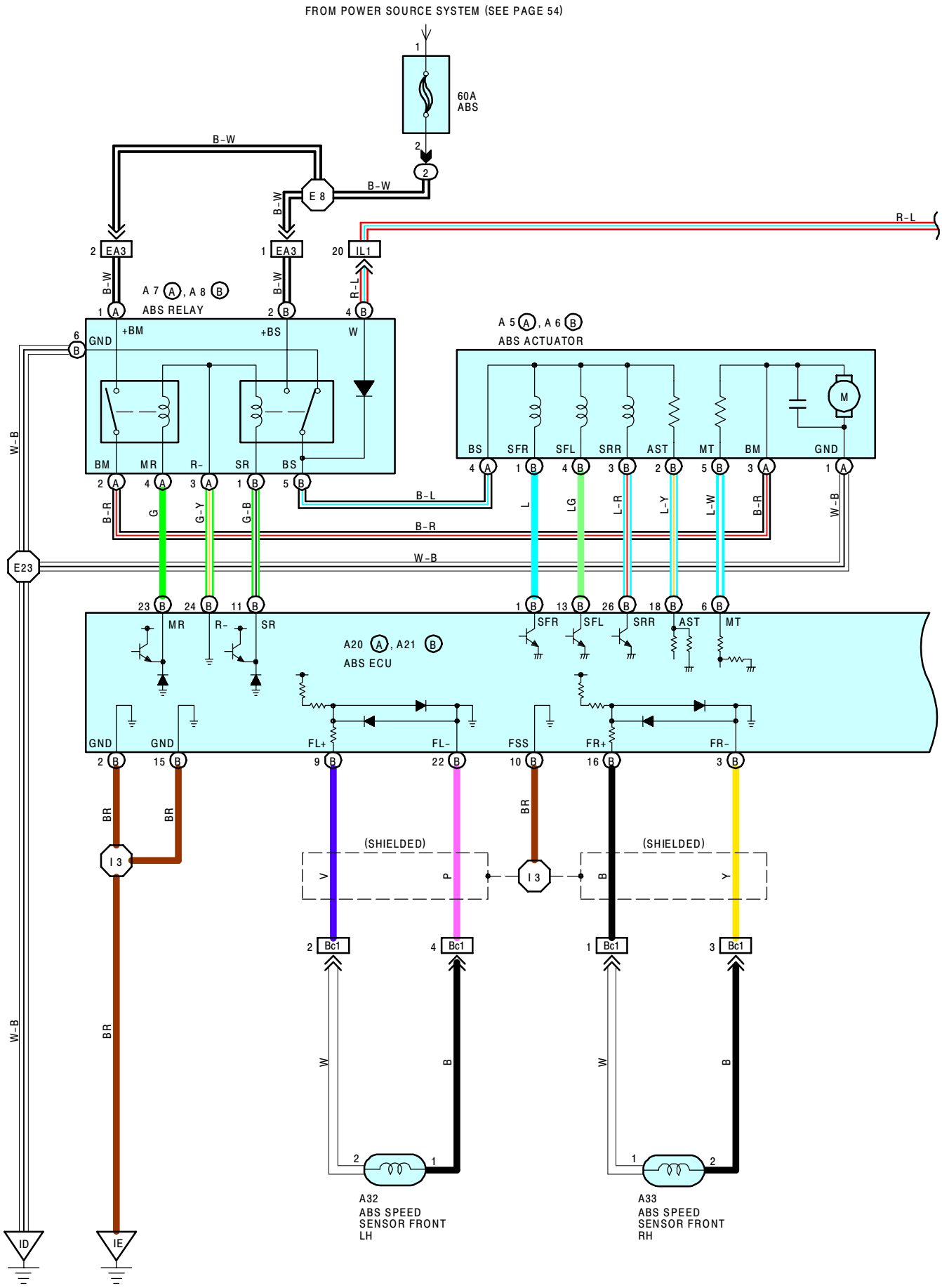
FROM POWER SOURCE SYSTEM (SEE PAGE 54)
60A
ABS
B-W
E 8
R-L
EA3
IL1
A 7 A, A 8 B
ABS RELAY
+BM
+BS
W
GND
A 5 A, A 6 B
ABS ACTUATOR
M
BS
SFR
SFL
SRR
AST
MT
BM
GND
BM
MR
R-
SR
BS
B-L
B-R
G
G-Y
G-B
L
LG
L-R
L-Y
L-W
W-B
E23
A20 A, A21 B
ABS ECU
GND
GND
FL+
FL-
FSS
FR+
FR-
BR
I 3
(SHIELDED)
V
P
B
Y
Bc1
W
A32
ABS SPEED
SENSOR FRONT
LH
A33
ABS SPEED
SENSOR FRONT
RH
ID
IE

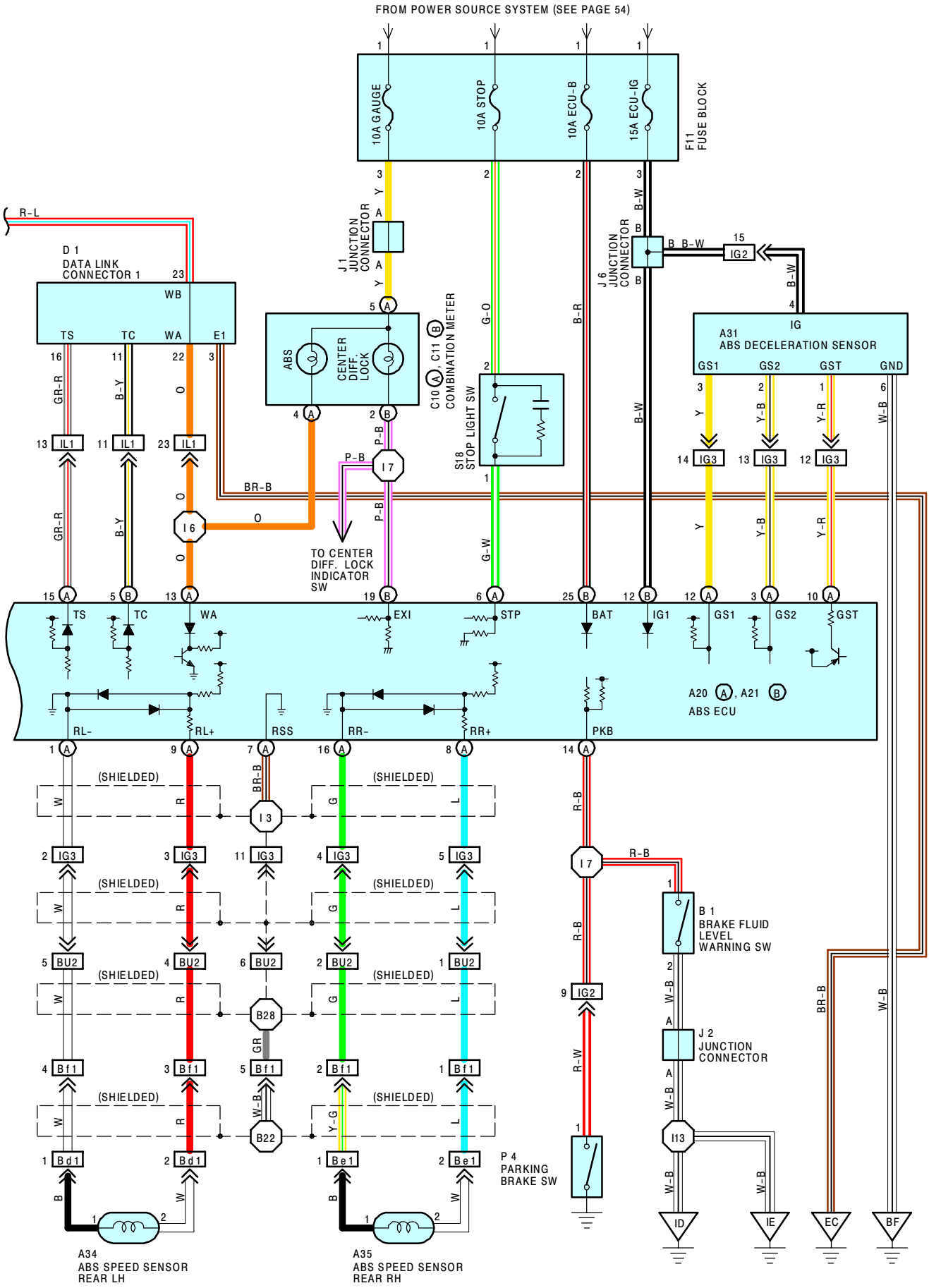
FROM POWER SOURCE SYSTEM (SEE PAGE 54)
10A GAUGE
10A STOP
10A ECU-B
15A ECU-IG
F11 FUSE BLOCK
J1 JUNCTION CONNECTOR
J6 JUNCTION CONNECTOR
D1 DATA LINK CONNECTOR 1
WB
TS
TC
WA
E1
ABS
CENTER DIFF. LOCK
C10 (A), C11 (B) COMBINATION METER
S18 STOP LIGHT SW
A31 ABS DECELERATION SENSOR
IG
GS1
GS2
GST
GND
TO CENTER DIFF. LOCK INDICATOR SW
EXI
STP
BAT
IG1
A20 (A), A21 (B) ABS ECU
RL-
RL+
RSS
RR-
RR+
PKB
(SHIELDED)
B 1 BRAKE FLUID LEVEL WARNING SW
J 2 JUNCTION CONNECTOR
P 4 PARKING BRAKE SW
A34 ABS SPEED SENSOR REAR LH
A35 ABS SPEED SENSOR REAR RH
ID
IE
EC
BF

SYSTEM OUTLINE

THIS SYSTEM CONTROLS THE RESPECTIVE BRAKE FLUID PRESSURES ACTING ON THE DISC BRAKE CYLINDERS OF THE RIGHT FRONT WHEEL, LEFT FRONT WHEEL AND REAR WHEELS WHEN THE BRAKES ARE APPLIED IN A PANIC STOP SO THAT THE WHEELS DO NOT LOCK. THIS RESULTS IN IMPROVED DIRECTIONAL STABILITY AND STEERABLITY DURING PANIC BRAKING.

1. INPUT SIGNALS

(1) SPEED SENSOR SIGNAL
THE SPEED OF THE WHEELS IS DETECTED AND INPUT TO **TERMINALS FL+, FR+, RL+** AND **RR+** OF THE ABS ECU.

(2) STOP LIGHT SW SIGNAL
A SIGNAL IS INPUT TO **TERMINAL STP** OF THE ABS ECU WHEN THE BRAKE PEDAL IS DEPRESSED.

(3) PARKING BRAKE SW SIGNAL
A SIGNAL IS INPUT TO **TERMINAL PKB** OF THE ABS ECU WHEN THE PARKING BRAKE SW IS ON.

(4) DECELERATION SENSOR SIGNAL
THE DEGREE OF VEHICLE DECELERATION IS DETECTED AND INPUT TO **TERMINAL GS1, GS2** AND **GST** OF THE ABS ECU.

(5) TRANSFER CONTROL SIGNAL
WHILE THE TRANSFER SHIFT LEVER IS IN **L4** POSITION, THE CENTER DIFF. LOCK INDICATOR SW DETECTS A SIGNAL OF THE CENTER DIFF. LOCK AND THE SIGNAL IS INPUT TO **TERMINAL EXI** OF THE ABS ECU.

2. SYSTEM OPERATION

(TRANSFER L4 POSITION)
WHEN THE TRANSFER SHIFT LEVER IS MOVED TO **L4** POSITION, THE CENTER DIFF. IS LOCKED, THEN THE ABS IS NOT IN OPERATION AND THE ABS WARNING LIGHT IS LIGHTED UP.

(TRANSFER EXCEPT L4 POSITION)
DURING SUDDEN BRAKING, THE ABS ECU WHICH HAS SIGNALS INPUT FROM EACH SENSOR, CONTROLS THE CURRENT TO THE SOLENOID INSIDE THE ACTUATOR, AND CAUSES THE HYDRAULIC PRESSURE ACTING ON EACH WHEEL CYLINDER ESCAPE TO THE RESERVOIR. THE PUMP INSIDE THE ACTUATOR IS ALSO OPERATING AT THIS TIME, AND IT RETURNS THE BRAKE FLUID FROM THE RESERVOIR TO THE MASTER CYLINDER, PREVENTING LOCKING OF THE VEHICLE WHEELS. IF THE ECU JUDGES THAT THE HYDRAULIC PRESSURE ACTING ON THE WHEEL CYLINDER IS INSUFFICIENT, THE CURRENT ACTING ON THE SOLENOID IS CONTROLLED AND THE HYDRAULIC PRESSURE IS INCREASED. HOLDING OF THE HYDRAULIC PRESSURE IS ALSO CONTROLLED BY THE ECU, BY THE SAME METHOD AS ABOVE. BY REPEATED PRESSURE, REDUCTION, HOLDING AND INCREASED ARE REPEATED TO MAINTAIN VEHICLE STABILITY AND IMPROVE STEERABILITY DURING SUDDEN BRAKING.

SERVICE HINTS

A20 (A), A21 (B) ABS ECU

(CONNECT THE ECU CONNECTOR)

(A) 15–GROUND	: APPROX. **12** VOLTS WITH THE IGNITION SW AT **ON** POSITION AND THE DATA LINK CONNECTOR 1 **TS–E1** NOT CONNECTED
(B) 5–GROUND	: APPROX. **12** VOLTS WITH THE IGNITION SW AT **ON** POSITION AND THE DATA LINK CONNECTOR 1 **TC–E1** NOT CONNECTED
(B) 1–GROUND	: APPROX. **12** VOLTS WITH IGNITION SW AT **ON** POSITION AND THE ABS WARNING LIGHT GOES OFF
(B) 6–GROUND	: APPROX. **12** VOLTS WITH IGNITION SW AT **ON** POSITION AND THE ABS WARNING LIGHT GOES OFF
(B) 18–GROUND	: APPROX. **12** VOLTS WITH IGNITION SW AT **ON** POSITION AND THE ABS WARNING LIGHT GOES OFF
(B) 26–GROUND	: APPROX. **12** VOLTS WITH IGNITION SW AT **ON** POSITION AND THE ABS WARNING LIGHT GOES OFF
(B) 13–GROUND	: APPROX. **12** VOLTS WITH IGNITION SW AT **ON** POSITION AND THE ABS WARNING LIGHT GOES OFF
(B) 2–GROUND	: ALWAYS CONTINUITY
(B) 15–GROUND	: ALWAYS CONTINUITY
(B) 12–GROUND	: APPROX. **12** VOLTS WITH THE IGNITION SW AT **ON** POSITION
(A) 6–GROUND	: APPROX. **12** VOLTS WITH THE BRAKE PEDAL DEPRESSED
(B) 25–GROUND	: ALWAYS APPROX. **12** VOLTS
(A) 14–GROUND	: APPROX. **12** VOLTS WITH THE ENGINE RUNNING AND THE PARKING BRAKE LEVER RELEASED OR THE BRAKE FLUID LEVEL WARNING SW ON

(DISCONNECT THE ECU CONNECTOR)

(B) 1 – **(B)** 18	: APPROX. **6** Ω
(B)13 – **(B)**18	: APPROX. **6** Ω
(B)26 – **(B)**18	: APPROX. **6** Ω
(B) 9 – **(B)** 22	: **0.9–1.8** KΩ
(B) 16 – **(B)** 3	: **0.9–1.8** KΩ
(B)11 – **(B)**24	: **60–100** Ω
(B)23 – **(B)**24	: **50–80** Ω
(A) 1 – **(A)** 9	: **0.5–1.6** KΩ
(A)16 – **(A)** 8	: **0.5–1.6** KΩ

: PARTS LOCATION

CODE		SEE PAGE	CODE		SEE PAGE	CODE	SEE PAGE
A 5	A	22	**A32**		26	**D 1**	22
A 6	B	22	**A33**		26	**F11**	25
A 7	A	22	**A34**		26	**J 1**	25
A 8	B	22	**A35**		26	**J 2**	25
A20	A	24	**B 1**		22	**J 6**	25
A21	B	24	**C10**	A	24	**P 4**	27
A31		26	**C11**	B	24	**S18**	25

: RELAY BLOCKS

CODE	SEE PAGE	RELAY BLOCKS (RELAY BLOCK LOCATION)
2	18	R/B NO. 2 (FRONT SIDE OF LEFT FENDER)

: CONNECTOR JOINING WIRE HARNESS AND WIRE HARNESS

CODE	SEE PAGE	JOINING WIRE HARNESS AND WIRE HARNESS (CONNECTOR LOCATION)
EA3	30	COWL WIRE AND ENGINE ROOM MAIN WIRE (LEFT FENDER)
IG2	32	COWL WIRE AND FLOOR WIRE (LEFT KICK PANEL)
IG3		
IL1	34	ENGINE WIRE AND COWL WIRE (BEHIND GLOVE BOX)
BU2	36	FLOOR NO. 3 WIRE AND FLOOR WIRE (LEFT QUARTER PANEL INNER)
BC1	38	COWL WIRE AND SPEED SENSOR NO. 1 WIRE (LEFT KICK PANEL)
BD1	38	FRAME NO. 2 WIRE AND SPEED SENSOR NO. 3 WIRE (REAR AXLE HOUSING LH)
BE1	38	FRAME NO. 2 WIRE AND SPEED SENSOR NO. 4 WIRE (REAR AXLE HOUSING RH)
BF1	38	FLOOR NO. 3 WIRE AND FRAME NO. 2 WIRE (LEFT QUARTER PANEL INNER)

: GROUND POINTS

CODE	SEE PAGE	GROUND POINTS LOCATION
EC	30	AIR INTAKE CHAMBER
ID	32	LEFT KICK PANEL
IE	32	RIGHT KICK PANEL
BF	36	UNDER THE CENTER CONSOLE BOX

: SPLICE POINTS

CODE	SEE PAGE	WIRE HARNESS WITH SPLICE POINTS	CODE	SEE PAGE	WIRE HARNESS WITH SPLICE POINTS
E 8	30	ENGINE ROOM MAIN WIRE	**I 7**	34	COWL WIRE
E23	30	COWL WIRE	**I13**		
I 3	34		**B22**	38	FLAME NO. 2 WIRE
I 6			**B28**	38	FLOOR NO. 3 WIRE

SYSTEM OUTLINE

WITH THE IGNITION SW TURNED TO ON, CURRENT FLOWS THROUGH THE **GAUGE** FUSE TO **TERMINAL 5** OF THE CRUISE CONTROL INDICATOR LIGHT. THE CURRENT THROUGH THE **ECU–IG** FUSE FLOWS TO **TERMINAL 14** OF THE CRUISE CONTROL ECU.

WHEN THE IGNITION SW IS ON AND THE CRUISE CONTROL MAIN SW IS TURNED ON, A SIGNAL IS INPUT FROM **TERMINAL 15** OF THE CRUISE CONTROL MAIN SW TO **TERMINAL 4** OF THE CRUISE CONTROL ECU. AS A RESULT, THE CRUISE CONTROL ECU FUNCTIONS AND THE CURRENT TO **TERMINAL 14** OF THE CRUISE CONTROL ECU FLOWS TO **TERMINAL 13** OF THE CRUISE CONTROL ECU → **GROUND**, AND THE CRUISE CONTROL SYSTEM IS IN A CONDITION READY FOR OPERATION.

AT THE SAME TIME, THE CURRENT FROM THE **GAUGE** FUSE FLOWS TO **TERMINAL 5** OF THE CRUISE CONTROL INDICATOR LIGHT → **TERMINAL 9** → **TERMINAL 5** OF THE CRUISE CONTROL ECU → **TERMINAL 13** → **GROUND**, CAUSING THE CRUISE CONTROL INDICATOR LIGHT TO LIGHT UP TO INDICATE THAT THE CRUISE CONTROL IS READY FOR OPERATION.

1. SET OPERATION

WHEN THE CRUISE CONTROL MAIN SW IS TURNED ON AND THE SET SW IS PUSHED WITH THE VEHICLE SPEED WITHIN THE SET LIMIT (APPROX. **36** KM/H, **22** MPH TO **200** KM/H, **124** MPH), A SIGNAL IS INPUT TO **TERMINAL 18** OF THE CRUISE CONTROL ECU AND THE VEHICLE SPEED AT THE TIME THE SET SW IS RELEASED IS MEMORIZED IN THE ECU AS THE SET SPEED.

2. SET SPEED CONTROL

DURING CRUISE CONTROL DRIVING, THE CRUISE CONTROL ECU COMPARES THE SET SPEED MEMORIZED IN THE CRUISE CONTROL ECU WITH THE ACTUAL VEHICLE SPEED INPUT INTO **TERMINAL 20** OF THE CRUISE CONTROL ECU FROM THE SPEEDOMETER, AND CONTROLS THE CRUISE CONTROL ACTUATOR TO MAINTAIN THE SET SPEED.

WHEN THE ACTUAL SPEED IS LOWER THAN THE SET SPEED, THE ECU CAUSES THE CURRENT TO THE CRUISE CONTROL ACTUATOR TO FLOW FROM **TERMINAL 12** OF THE CRUISE COTNROL ECU → **TERMINAL 6** OF THE CRUISE CONTROL ACTUATOR → **TERMINAL 7** → **TERMINAL 11** OF THE CRUISE CONTROL ECU. AS A RESULT, THE MOTOR IN THE CRUISE CONTROL ACTUATOR IS ROTATED TO OPEN THE THROTTLE VALVE, AND THE THROTTLE CABLE IS PULLED TO INCREASE THE VEHICLE SPEED. WHEN THE ACTUAL DRIVING SPEED IS HIGHER THAN THE SET SPEED, THE CURRENT TO CRUISE CONTROL ACTUATOR FLOWS FROM **TERMINAL 11** OF THE CRUISE CONTROL ECU → **TERMINAL 7** OF THE CRUISE CONTROL ACTUATOR → **TERMINAL 6** → **TERMINAL 12** OF THE CRUISE CONTROL ECU.

THIS CAUSES THE MOTOR IN THE CRUISE CONTROL ACTUATOR TO ROTATE TO CLOSE THE THROTTLE VALVE AND RETURN THE THROTTLE CABLE TO DECREASE THE VEHICLE SPEED.

3. COAST CONTROL

DURING CRUISE CONTROL DRIVING, WHILE THE COAST SW IS ON, THE CRUISE CONTROL ACTUATOR RETURNS THE THROTTLE CABLE TO CLOSE THE THROTTLE VALVE AND DECREASE THE DRIVING SPEED. THE VEHICLE SPEED WHEN THE COAST SWITCH IS TURNED OFF IS MEMORIZED, AND THE VEHICLE CONTINUES AT THE NEW SET SPEED.

4. ACCEL CONTROL

DURING CRUISE CONTROL DRIVING, WHILE THE ACCEL SW IS TURNED ON, THE CRUISE CONTROL ACTUATOR PULLS THE THROTTLE CABLE TO OPEN THE THROTTLE VALVE AND INCREASE THE DRIVING SPEED. THE VEHICLE SPEED WHEN THE ACCEL SW IS TURNED OFF IS MEMORIZED, AND THE VEHICLE CONTINUES AT THE NEW SET SPEED.

5. RESUME CONTROL

UNLESS THE VEHICLE SPEED FALLS BELOW THE MINIMUM SPEED LIMIT (APPROX. **40** KM/H, **25** MPH) AFTER CANCELING THE SET SPEED BY THE CANCEL SW, PUSHING THE RESUME SW WILL CAUSE THE VEHICLE TO RESUME THE SPEED SET BEFORE CANCELLATION.

6. MANUAL CANCEL MECHANISM

IF ANY OF THE FOLLOWING OPERATIONS OCCURS DURING CRUISE CONTROL OPERATION, THE MAGNETIC CLUTCH OF THE ACTUATOR MOTOR TURNS OFF, THE MOTOR ROTATES TO CLOSE THE THROTTLE VALVE, AND THE CRUISE CONTROL IS RELEASED.

- PLACING THE IGNITION SW AT **ST** POSITION. “SIGNAL INPUT TO **TERMINAL 2** OF THE CRUISE CONTROL ECU”
- DEPRESSING BRAKE PEDAL (STOP LIGHT SW ON). “SIGNAL INPUT TO **TERMINAL 16** OF THE CRUISE CONTROL ECU”
- PUSH THE CANCEL SW (CANCEL SW ON). “SIGNAL INPUT TO **TERMINAL 18** OF THE CRUISE CONTROL ECU”
- PUSH THE CRUISE SW (CRUISE SW OFF). “SIGNAL INPUT TO **TERMINAL 4** OF THE CRUISE CONTROL ECU”

7. AUTO CANCEL FUNCTION

A) IF ANY OF THE FOLLOWING OPERATING CONDITIONS OCCURS DURING CRUISE CONTROL OPERATION, THE SET SPEED IS ERASED, THE CURRENT FLOW TO MAGNETIC CLUTCH IS STOPPED, AND THE CRUISE CONTROL IS RELEASED. (MAIN SW TURNS OFF).

WHEN THIS OCCURS, THE IGNITION SW MUST BE TURNED OFF ONCE BEFORE THE MAIN SWITCH WILL TURN ON.

- ∗ OVER CURRENT TO TRANSISTOR DRIVING MOTOR AND/OR MAGNETIC CLUTCH.
- ∗ WHEN CURRENT CONTINUED TO FLOW TO THE MOTOR INSIDE THE ACTUATOR IN THE THROTTLE VALVE “OPEN” DIRECTION.
- ∗ OPEN CIRCUIT IN MAGNETIC CLUTCH.
- ∗ MOMENTARY INTERRUPTION OF VEHICLE SPEED SIGNAL.
- ∗ SHORT CIRCUIT IN CRUISE CONTROL SW.
- ∗ MOTOR DOES NOT OPERATE DESPITE THE MOTOR DRIVE SIGNAL BEING OUTPUT.

B) IF ANY OF THE FOLLOWING CONDITIONS OCCURS DURING CRUISE CONTROL OPERATION, THE SET SPEED IS ERASED, AND THE CRUISE CONTROL IS RELEASED. (THE POWER OF MAGNETIC CLUTCH IS CUT OFF UNTIL THE SET SW IS “ON” AGAIN.)

- ∗ WHEN THE VEHICLE SPEED FALLS BELOW THE MINIMUM SPEED LIMIT, APPROX. **40** KM/H (**25** MPH)
- ∗ WHEN THE VEHICLE SPEED FALLS MORE THAN **16** KM/H (**10** MPH) BELOW THE SET SPEED, E.G. ON AN UPWARD SLOPE.
- ∗ WHEN POWER TO THE CRUISE CONTROL SYSTEM IS MOMENTARILY CUT OFF.

8. AUTOMATIC TRANSMISSION CONTROL FUNCTION

∗ IN OVERDRIVE. IF THE VEHICLE SPEED BECOMES LOWER THAN THE OVERDRIVE CUT SPEED (SET SPEED MINUS APPROX. **4** KM/H, **2.5** MPH) DURING CRUISE CONTROL OPERATION, SUCH AS DRIVING UP A HILL, THE OVERDRIVE IS RELEASED AND THE POWER INCREASED TO PREVENT A REDUCTION IN THE VEHICLE SPEED.

∗ AFTER RELEASING THE OVERDRIVE, VEHICLE SPEED BECOMES HIGHER THAN THE OVERDRIVE RETURN SPEED (SET SPEED MINUS APPROX. **2** KM/H, **1.2** MPH), THE ECU JUDGES BY THE SIGNALS FROM POTENTIOMETER OF THE ACTUATOR THAT THE UPWARD SLOPE HAS FINISHED, AND OVERDRIVE IS RESUMED AFTER APPROXIMATELY **6** SECONDS.

∗ DURING CRUISE CONTROL DRIVING, THE CRUISE CONTROL OPERATION SIGNAL IS OUTPUT FROM THE CRUISE CONTROL ECU TO THE ENGINE CONTROL MODULE UPON RECEIVING THIS SIGNAL, SO THE ENGINE CONTROL MODULE CHANGES THE SHIFT PATTERN TO NORMAL.

TO MAINTAIN SMOOTH CRUISE CONTROL OPERATION (ON A DOWNWARD SLOPE ETC.), LOCK–UP RELEASE OF THE TRANSMISSION WHEN THE IDLING POINT OF THE THROTTLE POSITION IS “ON” IS FORBIDDEN.

SERVICE HINTS

C 4 CRUISE CONTROL ACTUATOR

1–3 : APPROX. **2** KΩ
5–4 : APPROX. **38.5** Ω

C18 CRUISE CONTROL ECU

14–GROUND : APPROX. **12** VOLTS WITH THE IGNITION SW AT **ON** POSITION
15–GROUND : ALWAYS APPROX. **12** VOLTS
20–GROUND : **4** PULSE WITH **1** ROTATION OF ROTOR SHAFT
18–GROUND : APPROX. **418** Ω WITH THE CANCEL SW ON IN THE CONTROL SW
APPROX. **68** Ω WITH THE RES/ACC SW ON IN THE CONTROL SW
APPROX. **198** Ω WITH THE SET/COAST SW ON IN THE CONTROL SW
4–GROUND : CONTINUITY WITH THE CRUISE SW ON IN THE CONTROL SW
13–GROUND : ALWAYS CONTINUITY

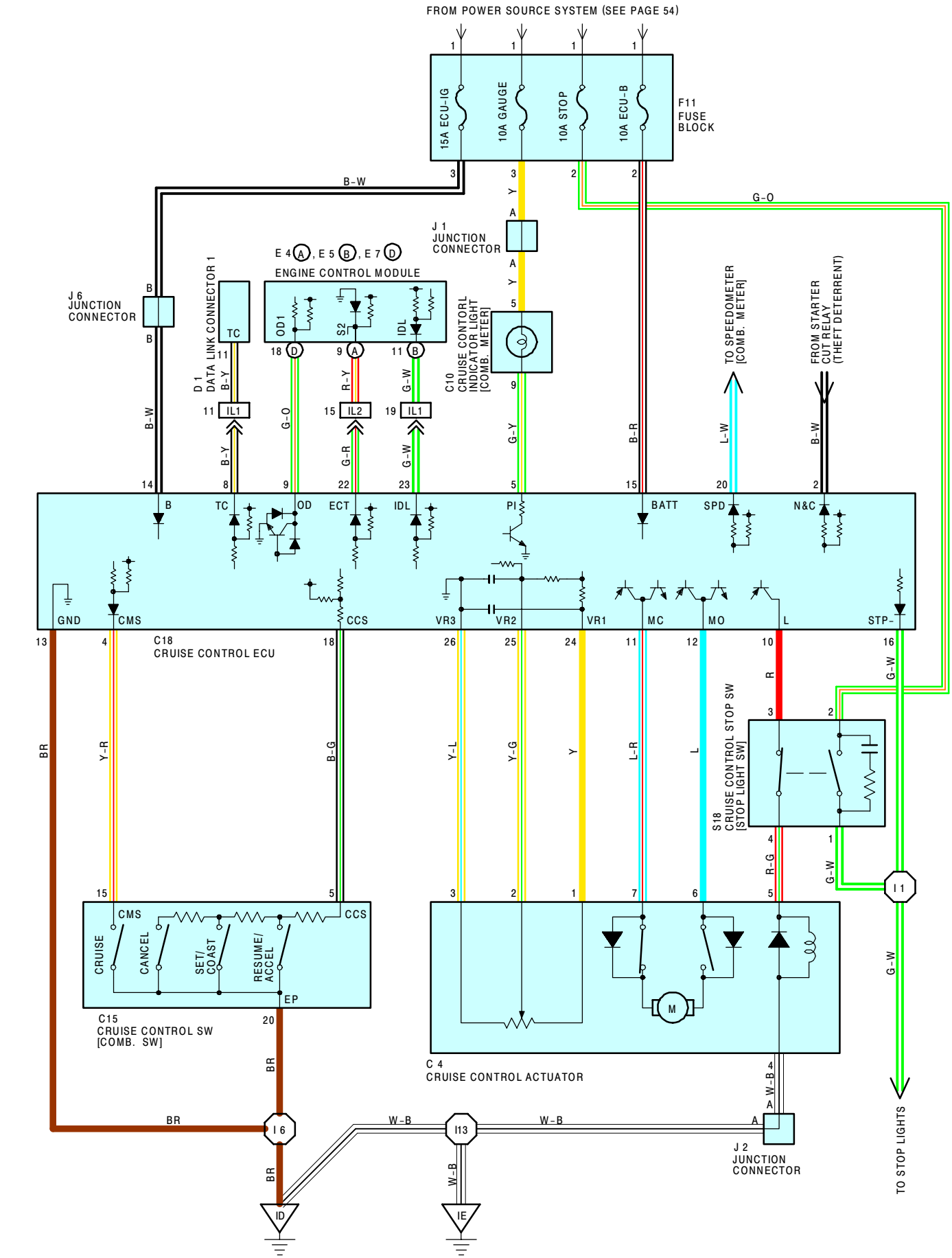
FROM POWER SOURCE SYSTEM (SEE PAGE 54)
15A ECU-IG
10A GAUGE
10A STOP
10A ECU-B
F11 FUSE BLOCK
B-W
G-O
J 1 JUNCTION CONNECTOR
E 4 (A), E 5 (B), E 7 (D)
ENGINE CONTROL MODULE
J 6 JUNCTION CONNECTOR
D 1 DATA LINK CONNECTOR 1
TC
OD1
S2
IDL
C10 CRUISE CONTORL INDICATOR LIGHT [COMB. METER]
TO SPEEDOMETER [COMB. METER]
FROM STARTER CUT RELAY (THEFT DETERRENT)
IL1
IL2
B-Y
G-O
R-Y
G-W
G-Y
B-R
L-W
B-W
B
TC
OD
ECT
IDL
PI
BATT
SPD
N&C
GND
CMS
CCS
VR3
VR2
VR1
MC
MO
L
STP-
C18 CRUISE CONTROL ECU
BR
Y-R
B-G
Y-L
Y-G
Y
L-R
L
R
G-W
S18 CRUISE CONTROL STOP SW [STOP LIGHT SW]
R-G
I 1
CRUISE
CANCEL
SET/ COAST
RESUME/ ACCEL
EP
C15 CRUISE CONTROL SW [COMB. SW]
M
C 4 CRUISE CONTROL ACTUATOR
W-B
I 6
I13
J 2 JUNCTION CONNECTOR
ID
IE
TO STOP LIGHTS

○ : PARTS LOCATION

CODE	SEE PAGE	CODE		SEE PAGE	CODE	SEE PAGE
C 4	22	**E 4**	A	24	**J 2**	25
C10	24	**E 5**	B	24	**J 6**	25
C15	24	**E 7**	D	24	**S18**	25
C18	24	**F11**		25		
D 1	22	**J 1**		25		

▭ : CONNECTOR JOINING WIRE HARNESS AND WIRE HARNESS

CODE	SEE PAGE	JOINING WIRE HARNESS AND WIRE HARNESS (CONNECTOR LOCATION)
IL1	34	ENGINE WIRE AND COWL WIRE (BEHIND GLOVE BOX)
IL2		

▽ : GROUND POINTS

CODE	SEE PAGE	GROUND POINTS LOCATION
ID	32	LEFT KICK PANEL
IE	32	RIGHT KICK PANEL

⬡ : SPLICE POINTS

CODE	SEE PAGE	WIRE HARNESS WITH SPLICE POINTS	CODE	SEE PAGE	WIRE HARNESS WITH SPLICE POINTS
I 1	34	COWL WIRE	**I13**	34	COWL WIRE
I 6					

C 4 GRAY

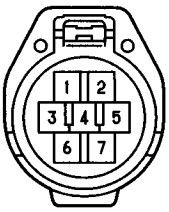

C10 GRAY

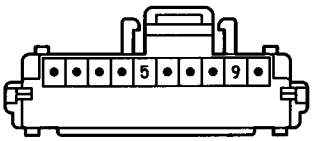

C15 BLACK

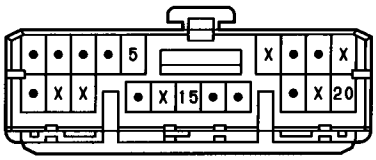

C18 GRAY

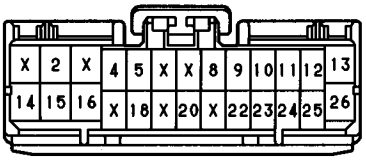

D 1 BLACK

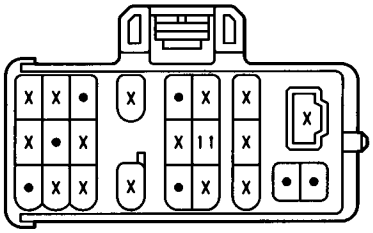

E 4 (A) DARK GRAY

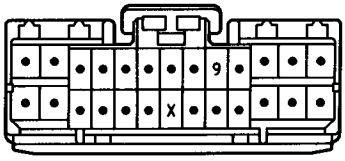

E 5 (B) DARK GRAY

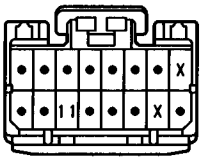

E 7 (D) DARK GRAY

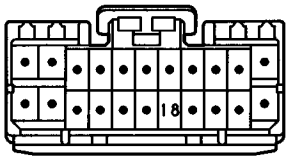

F11

(SEE PAGE 20)

J 1

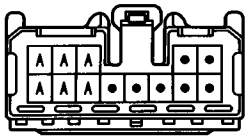

(HINT:SEE PAGE 7)

J 2 BLUE

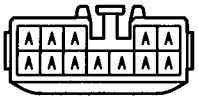

(HINT:SEE PAGE 7)

J 6

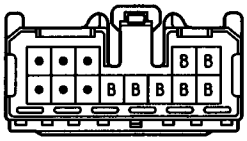

(HINT:SEE PAGE 7)

S18 BLACK

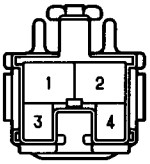

ELECTRONICALLY CONTROLLED TRANSMISSION

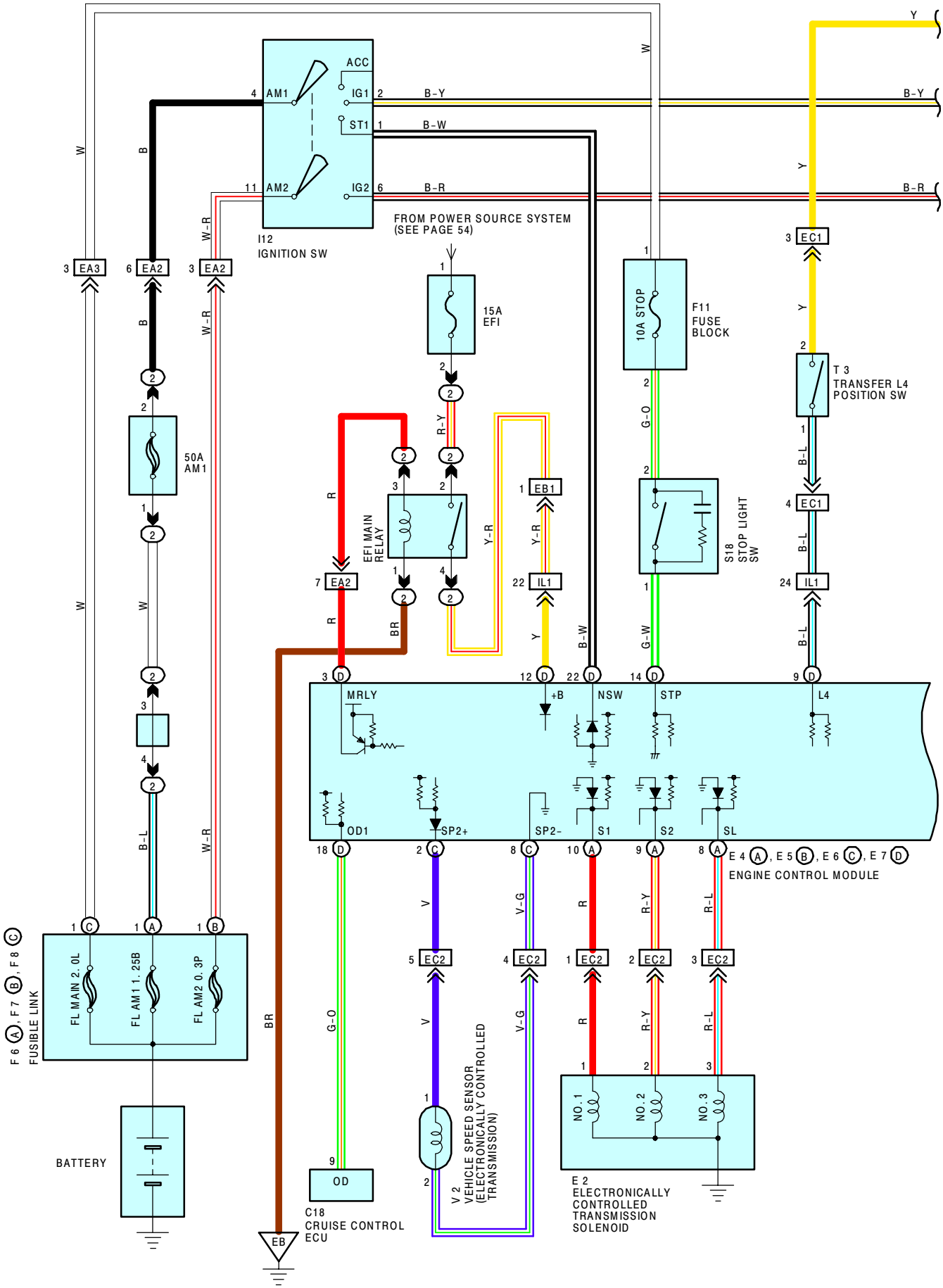

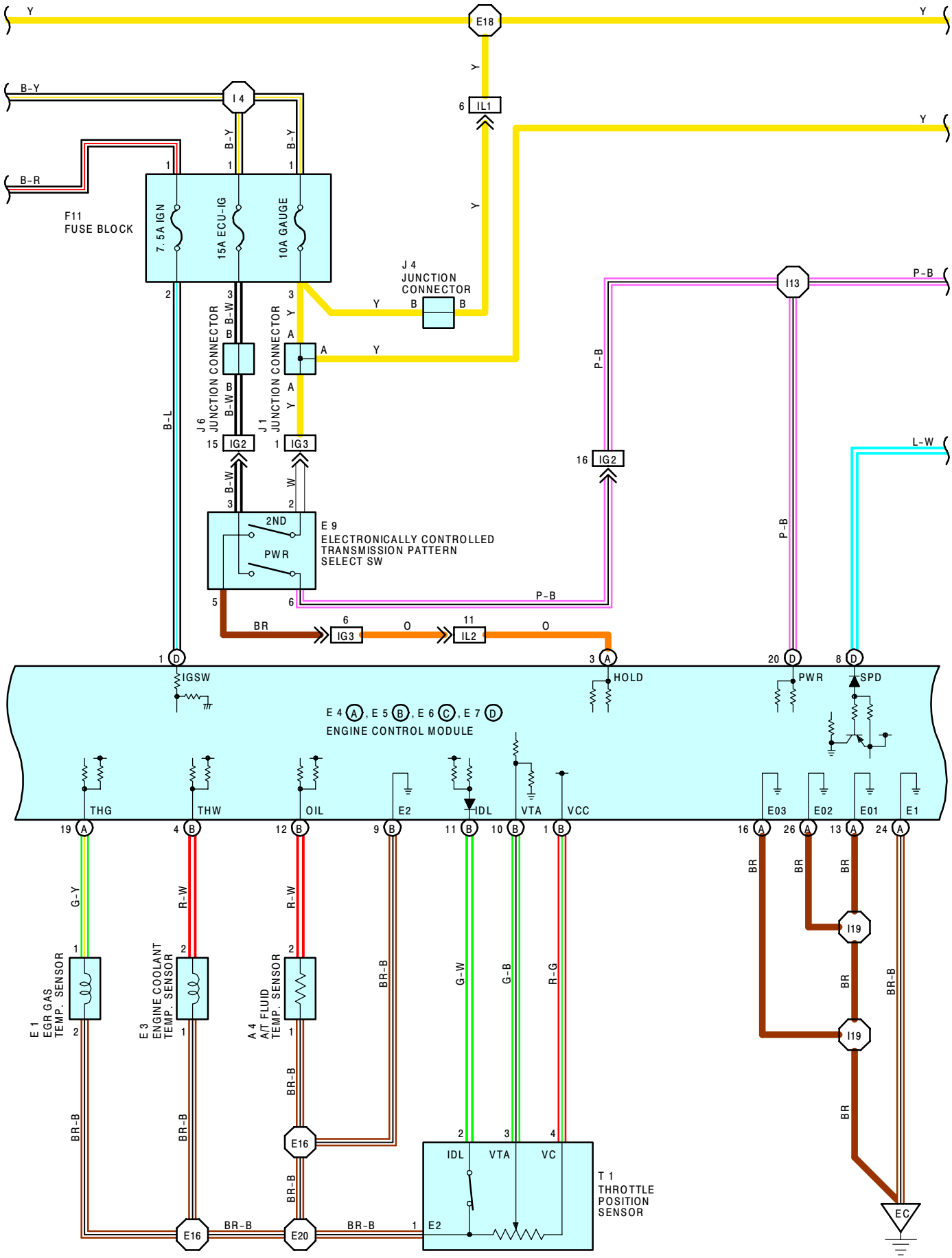
F11
FUSE BLOCK
7.5A IGN
15A ECU-IG
10A GAUGE
J 4
JUNCTION
CONNECTOR
J 6
JUNCTION CONNECTOR
J 1
JUNCTION CONNECTOR
E 9
ELECTRONICALLY CONTROLLED
TRANSMISSION PATTERN
SELECT SW
2ND
PWR
E 4 A, E 5 B, E 6 C, E 7 D
ENGINE CONTROL MODULE
IGSW
HOLD
PWR
SPD
THG
THW
OIL
E2
IDL
VTA
VCC
E03
E02
E01
E1
E 1
EGR GAS
TEMP. SENSOR
E 3
ENGINE COOLANT
TEMP. SENSOR
A 4
A/T FLUID
TEMP. SENSOR
T 1
THROTTLE
POSITION
SENSOR
VC
EC

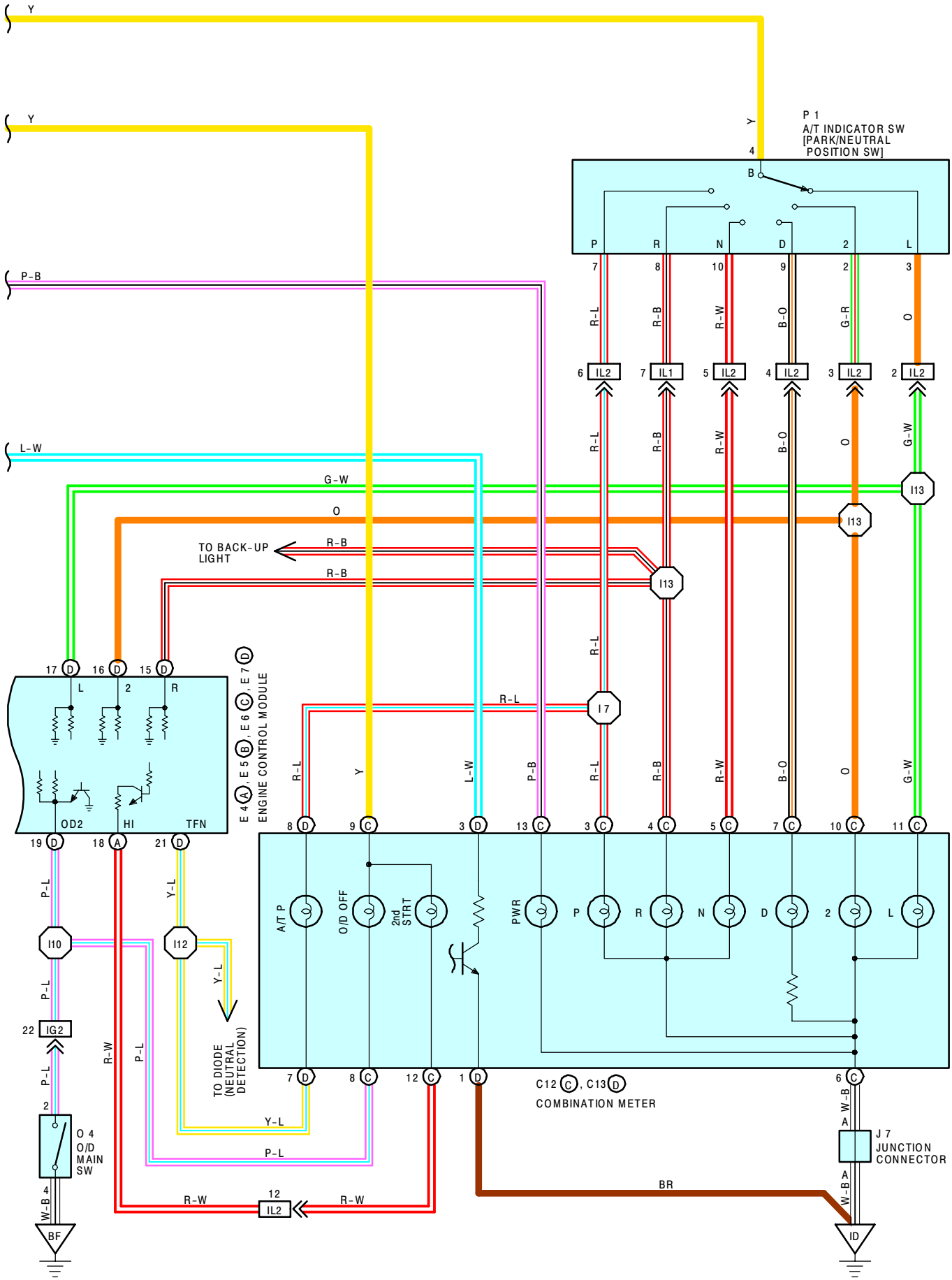
P 1
A/T INDICATOR SW
[PARK/NEUTRAL
POSITION SW]
TO BACK-UP
LIGHT
E 4 (A), E 5 (B), E 6 (C), E 7 (D)
ENGINE CONTROL MODULE
OD2
HI
TFN
TO DIODE
(NEUTRAL
DETECTION)
O 4
O/D
MAIN
SW
C12 (C), C13 (D)
COMBINATION METER
J 7
JUNCTION
CONNECTOR
A/T P
O/D OFF
2nd
STRT
PWR
BF
ID

SYSTEM OUTLINE

THE PREVIOUS AUTOMATIC TRANSMISSION HAS SELECTED EACH GEAR SHIFT USING MECHANICALLY CONTROLLED THROTTLE HYDRAULIC PRESSURE, GOVERNOR HYDRAULIC PRESSURE AND LOCK–UP HYDRAULIC PRESSURE. THE ELECTRONICALLY CONTROLLED TRANSMISSION, HOWEVER, ELECTRICALLY CONTROLS THE GOVERNOR PRESSURE AND LOCK–UP PRESSURE THROUGH THE SOLENOID VALVE. THE ENGINE CONTROL MODULE OF THE SOLENOID VALVE BASED ON THE INPUT SIGNALS FROM EACH SENSOR MAKES SMOOTH DRIVING POSSIBLE BY SHIFT SELECTION FOR EACH GEAR WHICH IS MOST APPROPRIATE TO THE DRIVING CONDITIONS AT THAT TIME.

1. GEAR SHIFT OPERATION

DURING DRIVING, THE ENGINE CONTROL MODULE SELECTS THE SHIFT FOR EACH GEAR WHICH IS MOST APPROPRIATE TO THE DRIVING CONDITIONS, BASED ON INPUT SIGNALS FROM THE ENGINE COOLANT TEMP. SENSOR TO **TERMINAL THW** OF THE ENGINE CONTROL MODULE, AND ALSO THE INPUT SIGNALS TO **TERMINAL SP2+** OF THE ENGINE CONTROL MODULE FROM THE VEHICLE SPEED SENSOR DEVOTED TO THE ELECTRONICALLY CONTROLLED TRANSMISSION. THE CURRENT IS THEN OUTPUT TO THE ELECTRONICALLY CONTROLLED TRANSMISSION SOLENOIDS. WHEN SHIFTING TO THE 1ST SPEED, THE CURRENT FLOWS FROM **TERMINAL S1** OF THE ENGINE CONTROL MODULE TO **TERMINAL 1** OF THE ELECTRONICALLY CONTROLLED TRANSMISSION SOLENOID → **GROUND**, AND CONTINUITY TO THE NO. 1 SOLENOID CAUSES THE SHIFT. FOR THE 2ND SPEED, THE CURRENT FLOWS FROM **TERMINAL S1** OF THE ENGINE CONTROL MODULE TO **TERMINAL 1** OF THE ELECTRONICALLY CONTROLLED TRANSMISSION SOLENOID → **GROUND** AND FROM **TERMINAL S2** OF THE ENGINE CONTROL MODULE TO **TERMINAL 2** OF THE ELECTRONICALLY CONTROLLED TRANSMISSION SOLENOID → **GROUND**, AND CONTINUITY TO NO. 1 AND NO. 2 SOLENOIDS CAUSES THE SHIFT. FOR THE 3RD SPEED, THERE IS NO CONTINUITY TO NO. 1 SOLENOID, ONLY TO NO. 2, CAUSING THE SHIFT. SHIFTING INTO THE 4TH SPEED (OVERDRIVE) TAKES PLACE WHEN THERE IS NO CONTINUITY TO EITHER NO. 1 OR NO. 2 SOLENOID.

2. LOCK–UP OPERATION

WHEN THE ENGINE CONTROL MODULE JUDGES FROM EACH SIGNAL THAT LOCK–UP OPERATION CONDITIONS HAVE BEEN MET, THE CURRENT FLOWS FROM **TERMINAL SL** OF THE ENGINE CONTROL MODULE TO **TERMINAL 3** OF THE ELECTRONICALLY CONTROLLED TRANSMISSION SOLENOID → **GROUND**, CAUSING CONTINUITY TO THE LOCK–UP SOLENOID AND CAUSING LOCK–UP OPERATION.

3. STOP LIGHT SW CIRCUIT

IF THE BRAKE PEDAL IS DEPRESSED (STOP LIGHT SW ON) WHEN DRIVING IN LOCK–UP CONDITION, A SIGNAL IS INPUT TO **TERMINAL STP** OF THE ENGINE CONTROL MODULE, AND THE ENGINE CONTROL MODULE OPERATES AND CONTINUITY TO THE LOCK–UP SOLENOID IS CUT.

4. OVERDRIVE CIRCUIT

* O/D MAIN SW ON

  WHEN THE O/D MAIN SW IS TURNED ON (SW POINT IS OPEN), A SIGNAL IS INPUT TO **TERMINAL OD2** OF THE ENGINE CONTROL MODULE, AND ENGINE CONTROL MODULE OPERATION CAUSES GEAR SHIFT WHEN THE CONDITIONS FOR OVERDRIVE ARE MET.

* O/D MAIN SW OFF

  WHEN THE O/D MAIN SW IS TURNED OFF (SW POINT IS CLOSED), THE CURRENT FROM THE O/D OFF INDICATOR LIGHT FLOWS THROUGH THE O/D MAIN SW TO **GROUND,** CAUSING THE INDICATOR LIGHT TO LIGHT UP. AT THE SAME TIME, A SIGNAL IS INPUT TO **TERMINAL OD2** OF THE ENGINE CONTROL MODULE, AND THE ENGINE CONTROL MODULE OPERATION PREVENTS SHIFT INTO OVERDRIVE.

5. ELECTRONICALLY CONTROLLED TRANSMISSION PATTERN SELECT SW CIRCUIT

IF THE ELECTRONICALLY CONTROLLED TRANSMISSION PATTERN SELECT SW IS CHANGED FROM NORMAL TO POWER, THE CURRENT THROUGH THE POWER INDICATOR FLOWS TO **GROUND**, AND FLOWS TO **TERMINAL PWR** OF THE ENGINE CONTROL MODULE, THE ENGINE CONTROL MODULE OPERATES, AND SHIFT UP AND SHIFT DOWN OCCUR AT HIGHER VEHICLE SPEEDS THAN WHEN THE SW IS IN **2ND** POSITION.

6. TRANSFER SHIFT OPERATION

WHEN THE TRANSFER SHIFT LEVER IS MOVED TO **L4** POSITION, A SIGNAL FROM TRANSFER **L4** POSITION SW IS INPUT TO THE **TERMINAL L4** OF THE ENGINE CONTROL MODULE, THEN SHIFT TO L4 OCCURS.

SERVICE HINTS

E 4 (A), E 5 (B), E 6 (C), E 7 (D) ENGINE CONTROL MODULE

STP	–GND	: **7.5–14.0** VOLTS WITH THE BRAKE PEDAL DEPRESSED
		0–1.5 VOLTS WITH THE BRAKE PEDAL RELEASED
TFN	–GND	: **0–3.0** VOLTS WITH THE TRANSFER POSITION AT **N** POSITION
		9.0–14.0 VOLTS WITH THE TRANSFER POSITION AT EXCEPT **N** POSITION
OD2	–GND	: **0–3.0** VOLTS WITH THE O/D MAIN SW TURNED ON
		9.0–14.0 VOLTS WITH THE O/D MAIN SW TURNED OFF
OD1	–GND	: **9.0–14.0** VOLTS WITH THE IGNITION SW ON
SP2+	–SP2–	: PULSE GENERATION WITH VEHICLE MOVING
SPD	–GND	: PULSE GENERATION WITH VEHICLE MOVING
IDL	–GND	: **0–3.0** VOLTS WITH THE THROTTLE VALVE FULLY CLOSE
		9.0–14.0 VOLTS WITH THE THROTTLE VALVE FULLY OPEN
VTA	–GND	: **3.5–4.5** VOLTS WITH THE THROTTLE VALVE FULLY CLOSE
		2.5–3.5 VOLTS WITH THE THROTTLE VALVE FULLY OPEN
2	–GND	: **7.5–14.0** VOLTS WITH THE SHIFT LEVER AT **2** POSITION
		0–1.5 VOLTS WITH THE SHIFT LEVER AT EXCEPT **2** POSITION
L	–GND	: **7.5–14.0** VOLTS WITH THE SHIFT LEVER AT **L** POSITION
		0–1.5 VOLTS WITH THE SHIFT LEVER AT EXCEPT **L** POSITION
R	–GND	: **7.5–14.0** VOLTS WITH THE SHIFT LEVER AT **R** POSITION
		0–1.5 VOLTS WITH THE SHIFT LEVER AT EXCEPT **R** POSITION
PWR	–GND	: **7.5–14.0** VOLTS WITH THE PATTERN SELECT SW AT **PWR** POSITION
		: **0–1.5** VOLTS WITH THE PATTERN SELECT SW AT **2ND** POSITION
L4	–GND	: **7.5–14.0** VOLTS WITH THE TRANSFER POSITION AT **L4** POSITION
		0–1.5 VOLTS WITH THE TRANSFER POSITION AT EXCEPT **L4** POSITION

E 2 ELECTRONICALLY CONTROLLED TRANSMISSION SOLENOID

1, 2, 3–GROUND : **11–15** Ω

E 9 ELECTRONICALLY CONTROLLED TRANSMISSION PATTERN SELECT SW

3–6 : CLOSED WITH THE ELECTRONICALLY CONTROLLED TRANSMISSION PATTERN SELECT SW AT **PWR** POSITION

O 4 O/D MAIN SW

2–4 : OPEN WITH THE O/D MAIN SW AT **ON** POSITION
CLOSED WITH THE O/D MAIN SW AT **OFF** POSITION

AND A/T INDICATOR

: PARTS LOCATION

CODE		SEE PAGE	CODE		SEE PAGE	CODE	SEE PAGE
A 4		22	**E 6**	C	24	**J 4**	25
C12	C	24	**E 7**	D	24	**J 6**	25
C13	D	24	**E 9**		26	**J 7**	25
C18		24	**F 6**	A	22	**O 4**	27
E 1		22	**F 7**	B	22	**P 1**	23
E 2		22	**F 8**	C	22	**S18**	25
E 3		22	**F11**		25	**T 1**	23
E 4	A	24	**I12**		25	**T 3**	23
E 5	B	24	**J 1**		25	**V 2**	23

: RELAY BLOCKS

CODE	SEE PAGE	RELAY BLOCKS (RELAY BLOCK LOCATION)
2	18	R/B NO. 2 (FRONT SIDE OF LEFT FENDER)

: CONNECTOR JOINING WIRE HARNESS AND WIRE HARNESS

CODE	SEE PAGE	JOINING WIRE HARNESS AND WIRE HARNESS (CONNECTOR LOCATION)
EA2	30	COWL WIRE AND ENGINE ROOM MAIN WIRE (LEFT FENDER)
EA3		
EB1	30	ENGINE ROOM MAIN WIRE AND ENGINE WIRE (NEAR THE DISTRIBUTOR)
EC1	30	ENGINE WIRE AND TRANSMISSION WIRE (NEAR THE STARTER)
EC2		
IG2	32	COWL WIRE AND FLOOR WIRE (LEFT KICK PANEL)
IG3		
IL1	34	ENGINE WIRE AND COWL WIRE (BEHIND GLOVE BOX)
IL2		

: GROUND POINTS

CODE	SEE PAGE	GROUND POINTS LOCATION
EB	30	FRONT SIDE OF LEFT FENDER
EC	30	AIR INTAKE CHAMBER
ID	32	LEFT KICK PANEL
BF	36	UNDER THE CENTER CONSOLE BOX

: SPLICE POINTS

CODE	SEE PAGE	WIRE HARNESS WITH SPLICE POINTS	CODE	SEE PAGE	WIRE HARNESS WITH SPLICE POINTS
E16	30	ENGINE WIRE	**I10**	34	COWL WIRE
E18			**I12**		
E20			**I13**		
I 4	34	COWL WIRE	**I19**	34	ENGINE WIRE
I 7					

A 4

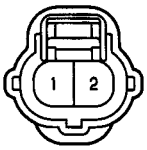

C12 Ⓒ BROWN

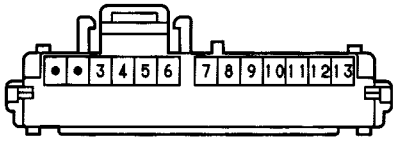

C13 Ⓓ

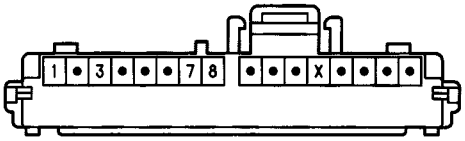

C18 GRAY

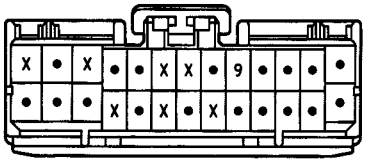

E 1 DARK GRAY

E 2 BLACK

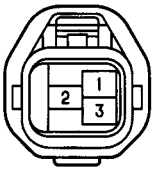

E 3 GREEN

E 4 Ⓐ DARK GRAY

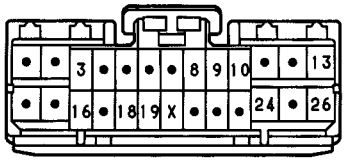

E 5 Ⓑ DARK GRAY

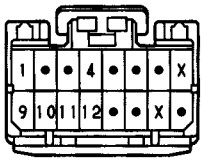

E 6 Ⓒ DARK GRAY

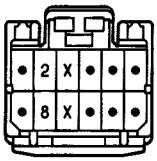

E 7 Ⓓ DARK GRAY

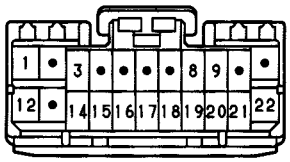

E 9

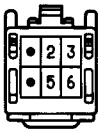

F 6 Ⓐ, F 8 Ⓒ

F 7 Ⓑ GRAY

F11

(SEE PAGE 20)

I12 BLACK

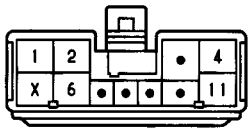

J 1

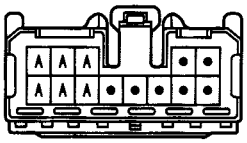

(HINT:SEE PAGE 7)

J 4

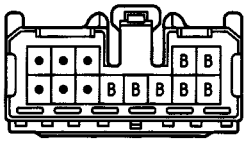

(HINT:SEE PAGE 7)

J 6

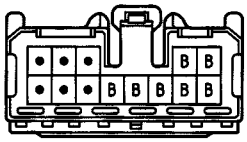

(HINT:SEE PAGE 7)

J 7 BLUE

(HINT:SEE PAGE 7)

O 4 BLUE

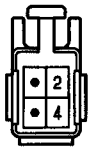

P 1 GRAY

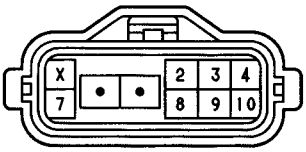

S18 BLACK

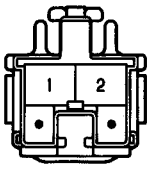

T 1 BLACK

T 3 GRAY

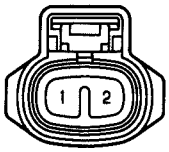

V 2 BLACK

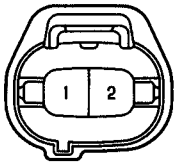

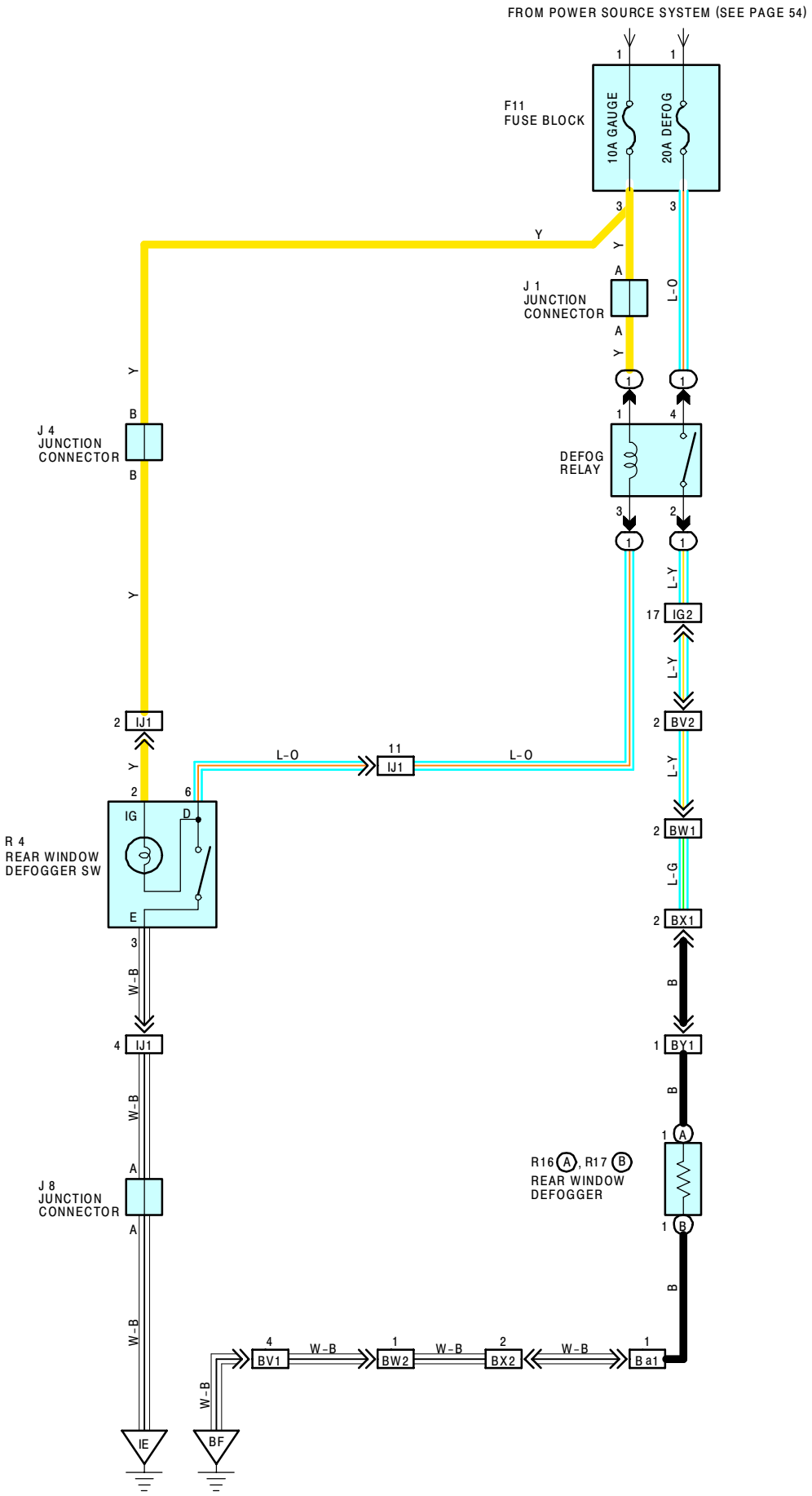
FROM POWER SOURCE SYSTEM (SEE PAGE 54)
F11
FUSE BLOCK
10A GAUGE
20A DEFOG
J 1
JUNCTION
CONNECTOR
J 4
JUNCTION
CONNECTOR
DEFOG
RELAY
IG2
BV2
BW1
BX1
BY1
IJ1
R 4
REAR WINDOW
DEFOGGER SW
J 8
JUNCTION
CONNECTOR
R16 A, R17 B
REAR WINDOW
DEFOGGER
BV1
BW2
BX2
B a1
IE
BF
Y
L-O
L-Y
L-G
B
W-B

SERVICE HINTS

DEFOG RELAY

(1) 4 – **(1)** 2 : CLOSED WITH THE IGNITION SW ON AND THE REAR WINDOW DEFOGGER SW ON

R 4 REAR WINDOW DEFOGGER SW

2, 6 GROUND : APPROX. **12** VOLTS WITH THE IGNITION SW AT **ON** POSITION

3–GROUND : ALWAYS CONTINUITY

○ : PARTS LOCATION

CODE	SEE PAGE	CODE	SEE PAGE	CODE	SEE PAGE
F11	25	**J 8**	25	**R17** B	25
J 1	25	**R 4**	25		
J 4	25	**R16** A	25		

⬭ : RELAY BLOCKS

CODE	SEE PAGE	RELAY BLOCKS (RELAY BLOCK LOCATION)
1	20	R/B NO. 1 (LEFT KICK PANEL)

▭ : CONNECTOR JOINING WIRE HARNESS AND WIRE HARNESS

CODE	SEE PAGE	JOINING WIRE HARNESS AND WIRE HARNESS (CONNECTOR LOCATION)
IG2	32	COWL WIRE AND FLOOR WIRE (LEFT KICK PANEL)
IJ1	34	COWL WIRE AND INSTRUMENT PANEL WIRE (INSTRUMENT PANEL CENTER)
BV1	36	LUGGAGE ROOM NO. 1 WIRE AND FLOOR WIRE (LEFT QUARTER PANEL INNER)
BV2		
BW1	36	BACK DOOR NO. 1 WIRE AND LUGGAGE ROOM NO. 1 WIRE (LEFT REAR SIDE OF ROOF)
BW2		
BX1	38	BACK DOOR NO. 1 WIRE AND BACK DOOR NO. 2 WIRE (BACK DOOR LEFT)
BX2		
BY1	38	REAR WINDOW NO. 1 WIRE AND BACK DOOR NO. 2 WIRE (BACK DOOR LEFT)
Ba1	38	REAR WINDOW NO. 1 WIRE AND BACK DOOR NO. 2 WIRE (BACK DOOR RIGHT)

▽ : GROUND POINTS

CODE	SEE PAGE	GROUND POINTS LOCATION
IE	32	RIGHT KICK PANEL
BF	36	UNDER THE CENTER CONSOLE BOX

F11

(SEE PAGE 20)

J 1

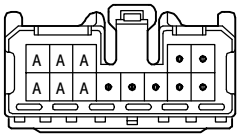

(HINT : SEE PAGE 7)

J 4

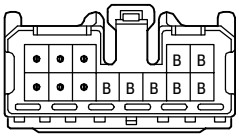

(HINT : SEE PAGE 7)

J 8 BLUE

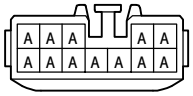

(HINT : SEE PAGE 7)

R 4 BLACK

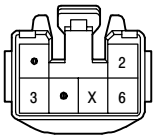

R16 (A), R17 (B) BLACK

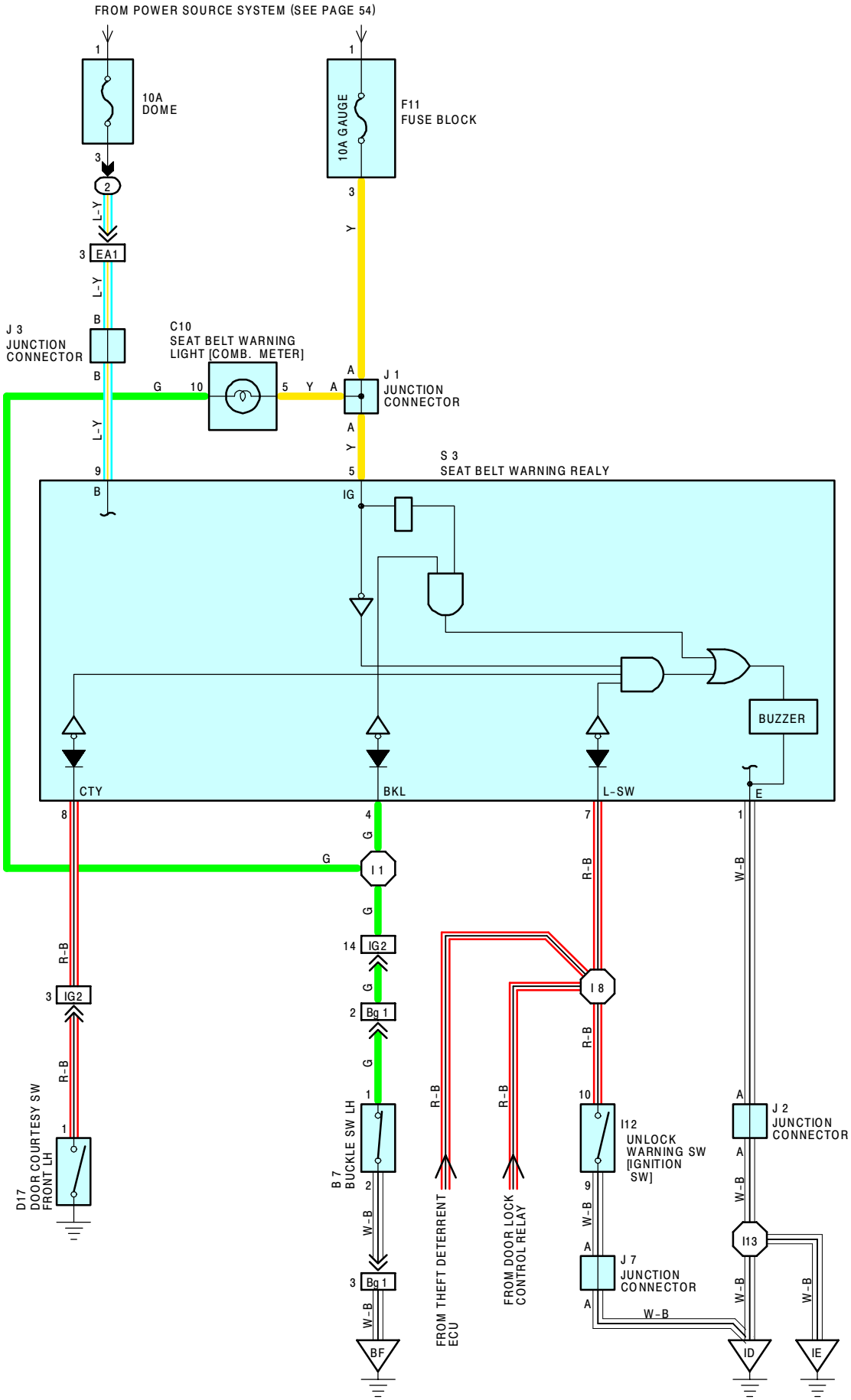
FROM POWER SOURCE SYSTEM (SEE PAGE 54)
10A DOME
F11 FUSE BLOCK
10A GAUGE
EA1
J 3 JUNCTION CONNECTOR
C10 SEAT BELT WARNING LIGHT [COMB. METER]
J 1 JUNCTION CONNECTOR
S 3 SEAT BELT WARNING REALY
BUZZER
CTY
BKL
L-SW
E
I 1
IG2
Bg 1
I 8
I12 UNLOCK WARNING SW [IGNITION SW]
J 2 JUNCTION CONNECTOR
I13
J 7 JUNCTION CONNECTOR
D17 DOOR COURTESY SW FRONT LH
B 7 BUCKLE SW LH
FROM THEFT DETERRENT ECU
FROM DOOR LOCK CONTROL RELAY
BF
ID
IE

SYSTEM OUTLINE

WHEN THE IGNITION SW IS TURNED TO ON, CURRENT FLOWS FROM THE **GAUGE** FUSE, THROUGH **TERMINAL 5** OF THE SEAT BELT WARNING RELAY AND **TERMINAL 5** OF THE SEAT BELT WARNING LIGHT, TO **TERMINAL 1** OF THE BUCKLE SW LH. IF SEAT BELT IS NOT FASTENED AT THIS TIME (THE BUCKLE SW IS ON), CURRENT FLOWS FROM **TERMINAL 1** OF THE BUCKLE SW LH TO **TERMINAL 2** → **GROUND**, LIGHTING UP THE SEAT BELT WARNING LIGHT. SIMULTANEOUSLY, A SIGNAL FROM THE BUCKLE SW LH IS INPUT TO **TERMINAL 4** OF THE SEAT BELT WARNING RELAY, AND THE CURRENT TO **TERMINAL 5** OF THE RELAY FLOWS THROUGH **TERMINAL 1** OF THE SEAT BELT WARNING RELAY TO **GROUND**, ACTIVATING THE SEAT BELT WARNING RELAY AND SOUNDING SEAT BELT WARNING BUZZER FOR **4** TO **8** SECONDS. IF THE SEAT BELT IS FASTENED (THE BUCKLE SW LH IS OFF) WHILE THE BUZZER SOUNDS, THE RELAY GROUND IS CUT, THE BUZZER STOP AND THE SEAT BELT WARNING LIGHT GOES OFF.

UNLOCK WARNING SYSTEM

WHEN THE IGNITION SW IS TURNED TO OFF AND THE DRIVER'S DOOR IS OPENED (THE DOOR COURTESY SW IS ON) WHILE THE KEY IS STILL INSERTED IN THE KEY CYLINDER (THE UNLOCK WARNING SW IS ON), A SIGNAL IS INPUT TO **TERMINAL 8** OF THE SEAT BELT WARNING RELAY, ACTIVATING THE SEAT BELT WARNING RELAY. THIS CAUSES CURRENT FROM THE **DOME** FUSE TO FLOW TO **TERMINAL 9** OF THE SEAT BELT WARNING RELAY → **TERMINAL 1** → **GROUND**, SOUNDING UNLOCK WARNING BUZZER.

SERVICE HINTS

B 7 BUCKLE SW LH
1–2 : OPEN WITH THE DRIVER'S SEAT BELT IN USE
D17 DOOR COURTESY SW FRONT LH
1–GROUND : CLOSED WITH THE DRIVER'S DOOR OPENED
S 3 SEAT BELT WARNING RELAY
1–GROUND : ALWAYS CONTINUITY
4–GROUND : CONTINUITY UNLESS THE DRIVER'S SEAT BELT IN USE
5–GROUND : APPROX. **12** VOLTS WITH THE IGNITION SW AT **ON** POSITION
7–GROUND : CONTINUITY WITH THE IGNITION KEY IN CYLINDER
8–GROUND : CONTINUITY WITH THE DRIVER'S DOOR OPENED
9–GROUND : ALWAYS APPROX. **12** VOLTS
I12 UNLOCK WARNING SW [IGNITION SW]
10–9 : CLOSED WITH THE IGNITION KEY IN CYLINDER

○ : PARTS LOCATION

CODE	SEE PAGE	CODE	SEE PAGE	CODE	SEE PAGE
B 7	28	**I12**	25	**J 7**	25
C10	24	**J 1**	25	**S 3**	25
D17	26	**J 2**	25		
F11	25	**J 3**	25		

⬭ : RELAY BLOCKS

CODE	SEE PAGE	RELAY BLOCKS (RELAY BLOCK LOCATION)
2	18	R/B NO. 2 (FRONT SIDE OF LEFT FENDER)

▭ : CONNECTOR JOINING WIRE HARNESS AND WIRE HARNESS

CODE	SEE PAGE	JOINING WIRE HARNESS AND WIRE HARNESS (CONNECTOR LOCATION)
EA1	30	COWL WIRE AND ENGINE ROOM MAIN WIRE (LEFT FENDER)
IG2	32	COWL WIRE AND FLOOR WIRE (LEFT KICK PANEL)
Bg1	40	FLOOR NO. 1 WIRE AND SEAT NO. 1 LH WIRE (UNDER THE DRIVER'S SEAT)

▽ : GROUND POINTS

CODE	SEE PAGE	GROUND POINTS LOCATION
ID	32	LEFT KICK PANEL
IE	32	RIGHT KICK PANEL
BF	36	UNDER THE CENTER CONSOLE BOX

⬡ : SPLICE POINTS

CODE	SEE PAGE	WIRE HARNESS WITH SPLICE POINTS	CODE	SEE PAGE	WIRE HARNESS WITH SPLICE POINTS
I 1	34	COWL WIRE	**I13**	34	COWL WIRE
I 8					

B 7 BLACK

C10 GRAY

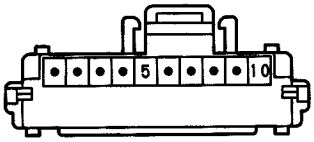

D17 BLUE

F11

(SEE PAGE 20)

I12 BLACK

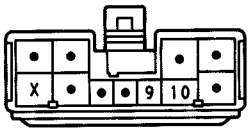

J 1

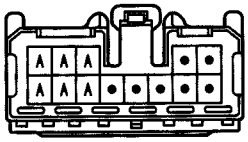

(HINT:SEE PAGE 7)

J 2 BLUE

(HINT:SEE PAGE 7)

J 3

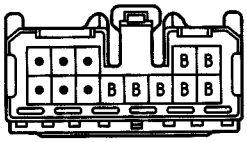

(HINT:SEE PAGE 7)

J 7 BLUE

(HINT:SEE PAGE 7)

S 3 BLUE

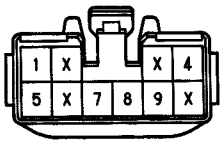

NOTICE: When inspecting or repairing the SRS, perform the operation in accordance with the following precautionary instructions and the procedure and precautions in the Repair Manual for the applicable model year.

- Malfunction symptoms of the supplemental restraint system are difficult to confirm, so the diagnostic trouble codes become the most important source of information when troubleshooting.

  When troubleshooting the supplemental restraint system, always inspect the diagnostic trouble codes before disconnecting the battery.
- Work must be started after 90 seconds from the time the Ignition SW is set to the “LOCK” position and the negative (–) terminal cable is disconnected from the battery.

  (The supplemental restraint system is equipped with a back–up power source so that if work is started within 90 seconds of disconnecting the negative (–) terminal cable from the battery, the SRS may be activated.)

  When the negative (–) terminal cable is disconnected from the battery, memory of the clock and audio systems will be cancelled. So before starting work, make a record of the contents memorized by each memory system. When work is finished, reset the clock and audio system as before and adjust the clock.

  To avoid erasing the memory of each memory system, never use a back–up power supply from outside the vehicle.
- When removing the steering wheel pad or handling a new steering wheel pad, keep the pad upper surface facing upward. Also, lock the lock lever of the twin type lock connector at the rear of the pad and take care not to damage the connector.

  (Storing the pad with its metallic surface up may lead to a serious accident if the SRS inflates for some reason.)
- Always store a removed or new front passenger airbag assembly with the airbag door facing up. Storing the airbag assembly with the airbag door facing down could cause a serious accident if the airbag inflates.
- Store the steering wheel pad where the ambient temperature remains below 93°C (200°F), without high humidity and away from electrical noise.
- Never use SRS parts from another vehicle. When replacing SRS parts, replace them with new parts.
- Never disassemble and repair the steering wheel pad, front passenger airbag assembly, airbag sensor assembly or front airbag sensors.
- Before repairing the body, remove the airbag sensors if during repair shocks are likely to be applied to the sensors due to vibration of the body or direct tapping with tools or other parts.
- Do not reuse a steering wheel pad or front airbag sensors.

  After evaluating whether the airbag sensor assembly is damaged or not, decide whether or not reuse it.

  (See the Repair Manual for the method for evaluating the airbag sensor assembly.)
- When troubleshooting the supplemental restraint system, use a high–impedance (Min. 10kΩ/V) tester.
- The wire harness of the supplemental restraint system is integrated with the cowl wire harness assembly. The vehicle wiring harness exclusively for the airbag system is distinguished by corrugated yellow tubing, as are the connectors.
- Do not measure the resistance of the airbag squibs.

  (It is possible this will deploy the airbag and is very dangerous.)
- If the wire harness used in the supplemental restraint system is damaged, replace the whole wire harness assembly.

  When the connector to the front airbag sensors can be repaired alone (when there is no damage to the wire harness), use the repair wire specially designed for the purpose.

  (Refer to the Repair Manual for the applicable Model year for details of the replacement method.)
- INFORMATION LABELS (NOTICES) are attached to the periphery of the supplemental restraint system components. Follow the instructions on the notices.

The supplemental restraint system has connectors which possess the functions described below:

1. SRS ACTIVATION PREVENTION MECHANISM

   Each connector contains a short spring plate. When the connector is disconnected, the short spring plate automatically connects the power source and grounding terminals of the squib to preclude a potential difference between the terminals.

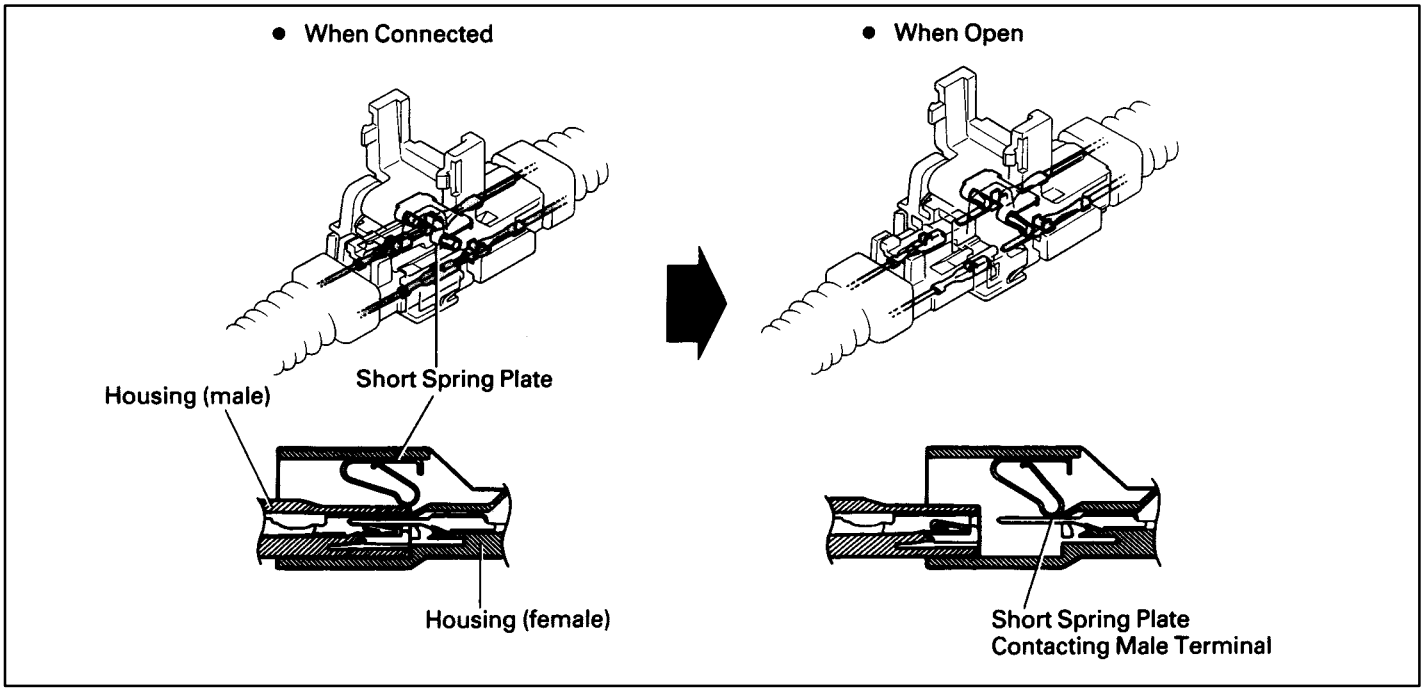

2. ELECTRICAL CONNECTION CHECK MECHANISM

   This mechanism is designed to electrically checks if connectors are connected correctly and completely.

   The electrical connection check mechanism is designed so that the connection detection pin connects with the diagnosis terminals when the connector housing lock is in the locked condition.

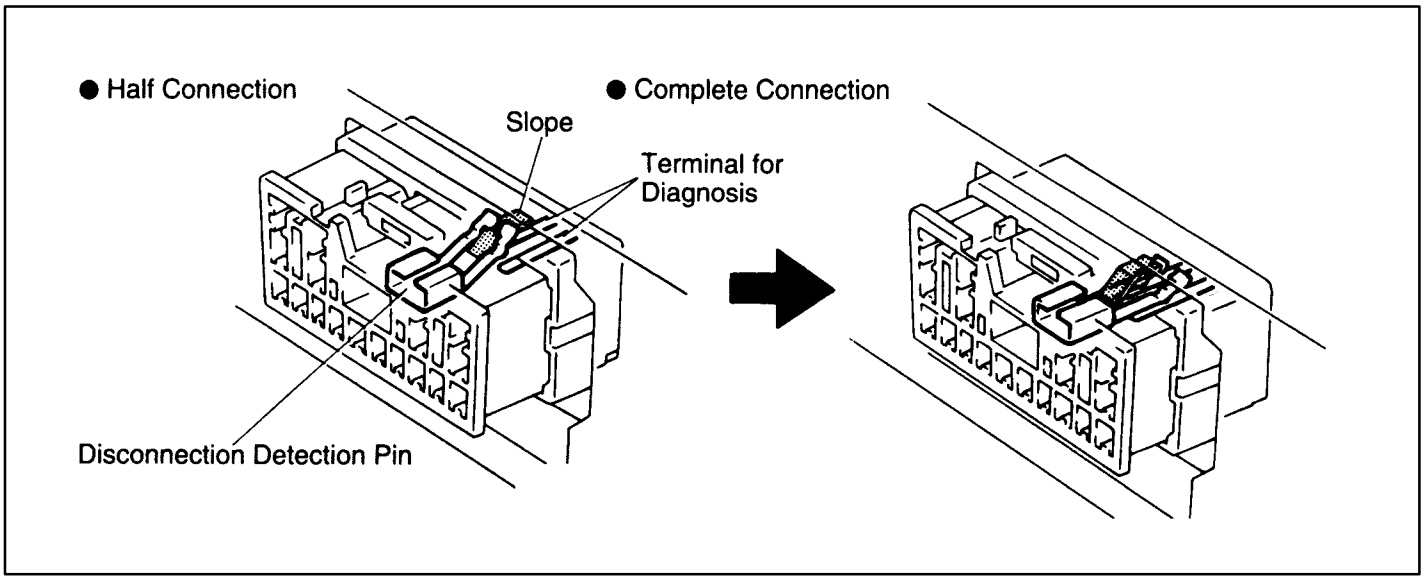

3. CONNECTOR TWIN–LOCK MECHANISM

With this mechanism connectors (male and female connectors) are locked by two locking devices to increase connection reliability. If the primary lock is incomplete, ribs interfere and prevent the secondary lock.

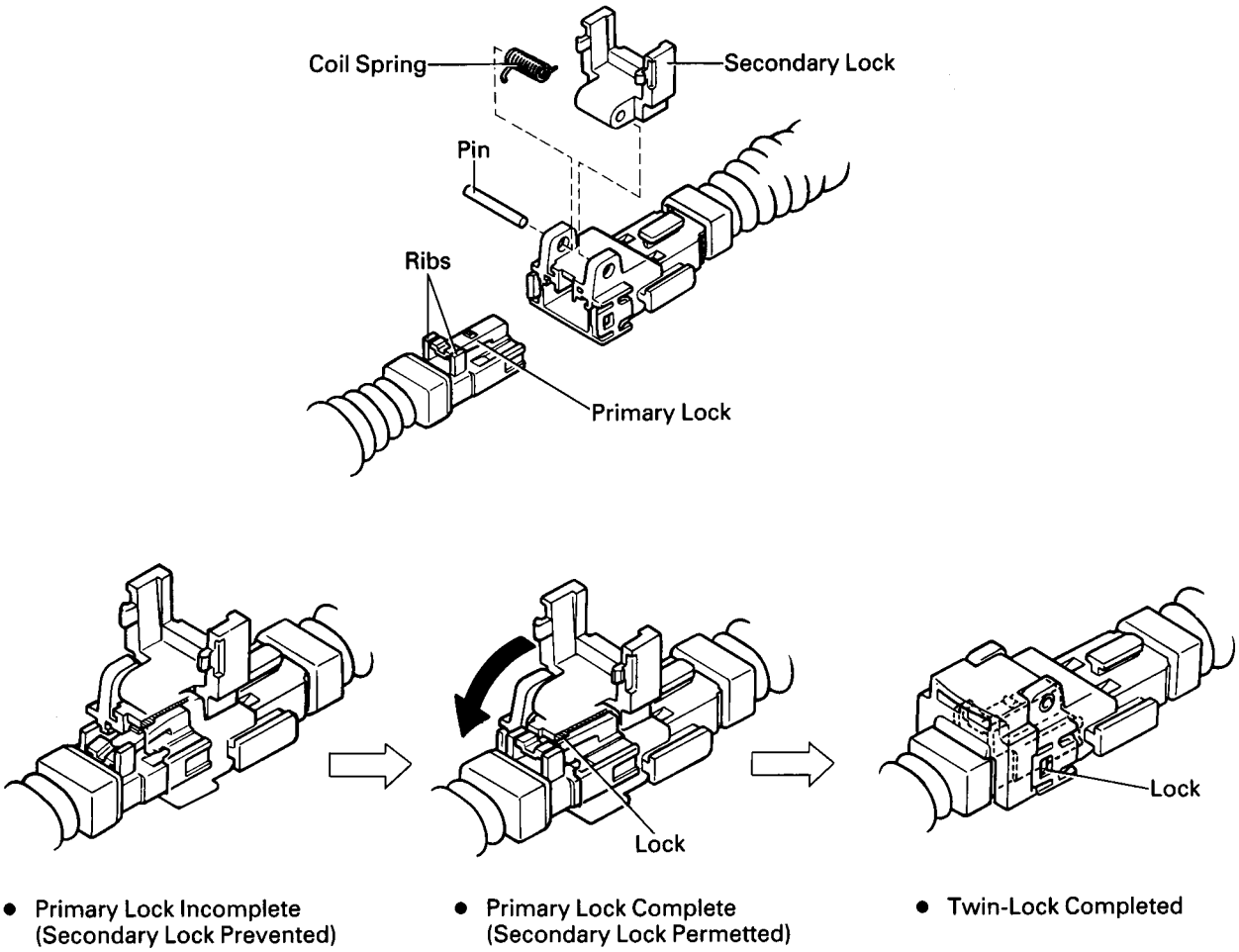

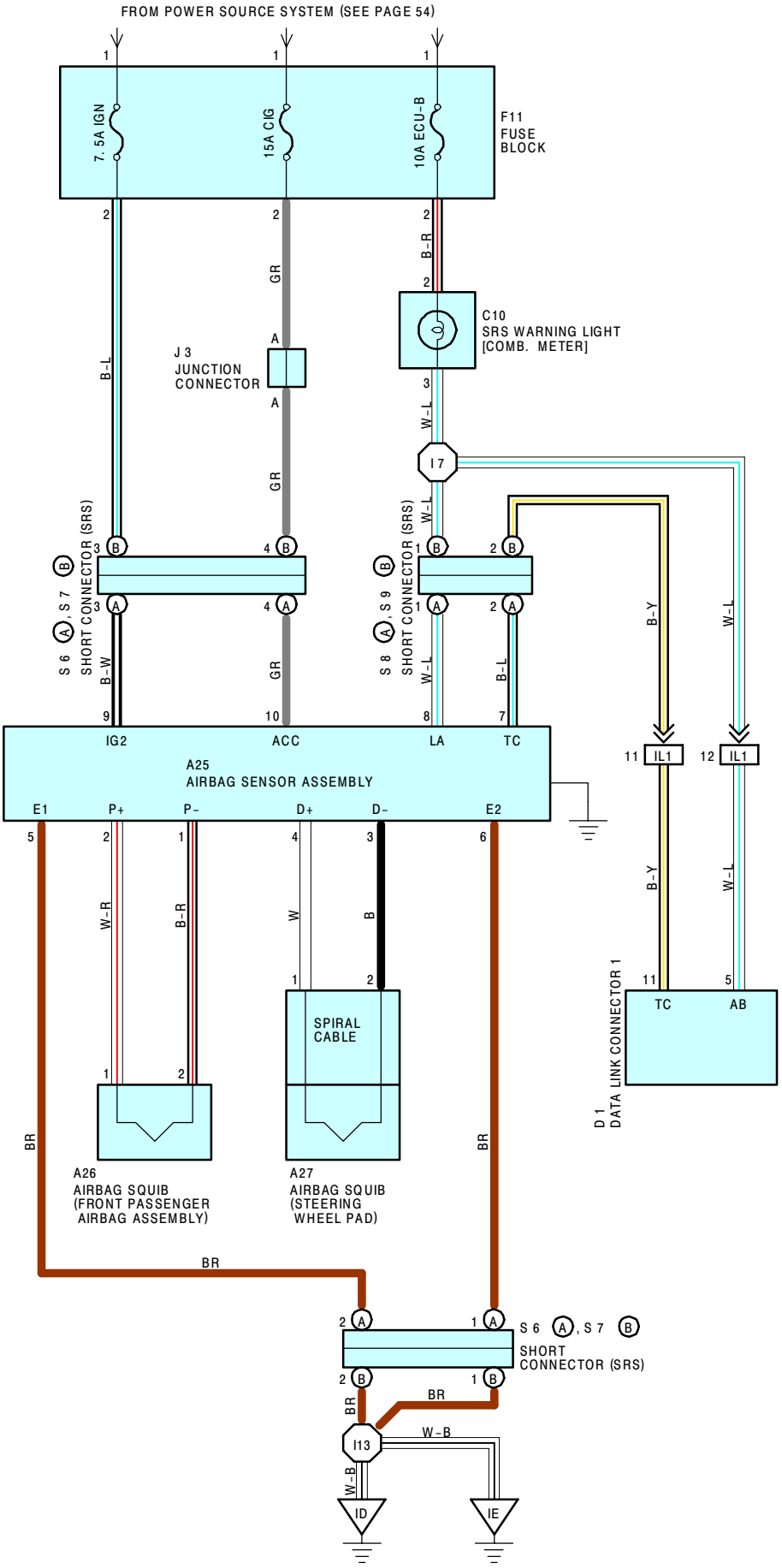
FROM POWER SOURCE SYSTEM (SEE PAGE 54)
7. 5A IGN
15A CIG
10A ECU-B
F11
FUSE
BLOCK
B-L
GR
B-R
J 3
JUNCTION
CONNECTOR
C10
SRS WARNING LIGHT
[COMB. METER]
W-L
I 7
S 6 A, S 7 B
SHORT CONNECTOR (SRS)
S 8 A, S 9 B
SHORT CONNECTOR (SRS)
B-W
B-Y
IG2
ACC
LA
TC
A25
AIRBAG SENSOR ASSEMBLY
IL1
E1
P+
P-
D+
D-
E2
W-R
W
B
SPIRAL
CABLE
D 1
DATA LINK CONNECTOR 1
TC
AB
BR
A26
AIRBAG SQUIB
(FRONT PASSENGER
AIRBAG ASSEMBLY)
A27
AIRBAG SQUIB
(STEERING
WHEEL PAD)
S 6 A, S 7 B
SHORT
CONNECTOR (SRS)
I13
W-B
ID
IE

SYSTEM OUTLINE

THE SRS IS A DRIVER AND PASSENGER PROTECTION DEVICE WHICH HAS A SUPPLEMENTAL ROLE TO THE SEAT BELTS.

WHEN THE IGNITION SW IS TURNED TO ACC OR ON, CURRENT FROM THE **CIG** FUSE FLOWS TO **TERMINAL 10** OF THE AIRBAG SENSOR ASSEMBLY. ONLY WHEN THE IGNITION SW IS ON DOES CURRENT FROM THE **IGN** FUSE FLOW TO **TERMINAL 9** OF THE ASSEMBLY.

IF AN ACCIDENT OCCURS WHILE DRIVING, DECELERATION CAUSED BY A FRONTAL IMPACT IS DETECTED BY THE SENSOR IN THE AIRBAG SENSOR ASSEMBLY, AND WHEN THE FRONTAL IMPACT EXCEEDS A SET LEVEL (WHEN THE SAFING SENSOR BUILT INTO THE AIRBAG SENSOR ASSEMBLY IS ON, THE FLOOR SENSOR BUILT INTO THE AIRBAG SENSOR ASSEMBLY IS ON AND THE AIRBAG SENSOR ASSEMBLY IS ON), CURRENT FROM THE **CIG** OR THE **IGN** FUSE FLOWS THROUGH THE AIRBAG SENSOR ASSEMBLY TO **TERMINALS 4** AND **2** OF THE AIRBAG SENSOR ASSEMBLY → **TERMINAL 1** OF THE AIRBAG SQUIBS → **TERMINAL 2** → **TERMINALS 3** AND **1** OF THE AIRBAG SENSOR ASSEMBLY → THE FLOOR SENSOR BUILT INTO THE AIRBAG SENSOR ASSEMBLY → **TERMINAL 5, TERMINAL 6** OR **BODY GROUND** → **GROUND.** WHEN THE SAFING SENSOR BUILT INTO THE AIRBAG SENSOR ASSEMBLY IS ON, AND FLOOR SENSOR BUILT INTO THE AIRBAG SENSOR ASSEMBLY IS ON, ONE OF THE ABOVE–MENTIONED CIRCUITS IS ACTIVATED SO THAT THE CURRENT FLOWS TO THE AIRBAG SQUIBS, CAUSING IT TO OPERATE.

THE AIRBAG STORED INSIDE THE STEERING WHEEL PAD IS INSTANTANEOUSLY EXPANDED TO SOFTEN THE SHOCK TO A DRIVER.

SIMULTANEOUSLY, THE AIRBAG STORED INSIDE THE PASSENGER'S INSTRUMENT PANEL IS INSTANTANEOUSLY EXPANDED TO SOFTEN THE SHOCK TO A PASSENGER.

○ : PARTS LOCATION

CODE	SEE PAGE	CODE		SEE PAGE	CODE		SEE PAGE
A25	24	**D 1**		22	**S 7**	B	25
A26	24	**F11**		25	**S 8**	A	25
A27	24	**J 3**		25	**S 9**	B	25
C10	24	**S 6**	A	25			

▭ : CONNECTOR JOINING WIRE HARNESS AND WIRE HARNESS

CODE	SEE PAGE	JOINING WIRE HARNESS AND WIRE HARNESS (CONNECTOR LOCATION)
IL1	34	ENGINE WIRE AND COWL WIRE (BEHIND GLOVE BOX)

▽ : GROUND POINTS

CODE	SEE PAGE	GROUND POINTS LOCATION
ID	32	LEFT KICK PANEL
IE	32	RIGHT KICK PANEL

⬡ : SPLICE POINTS

CODE	SEE PAGE	WIRE HARNESS WITH SPLICE POINTS	CODE	SEE PAGE	WIRE HARNESS WITH SPLICE POINTS
I 7	34	COWL WIRE	**I13**	34	COWL WIRE

A25 YELLOW

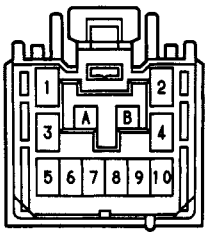

A26 YELLOW

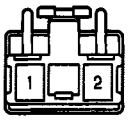

A27 YELLOW

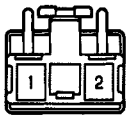

C10 GRAY

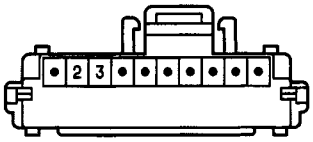

D 1 BLACK

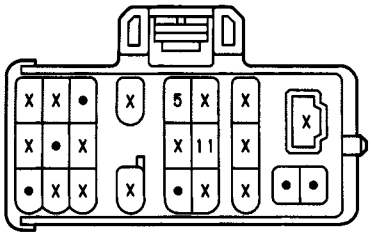

F11

(SEE PAGE 20)

J 3

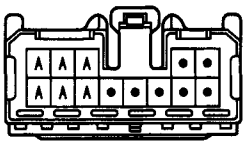

(HINT:SEE PAGE 7)

S 6 (A) YELLOW

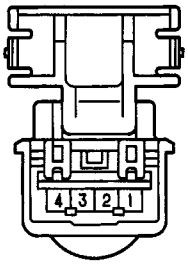

S 7 (B) YELLOW

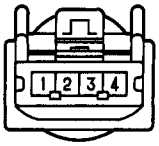

S 8 (A) YELLOW

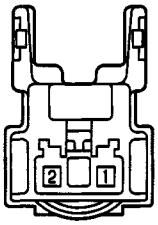

S 9 (B) YELLOW

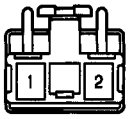

*1 : CENTER DIFF. LOCK
*2 : A/T P

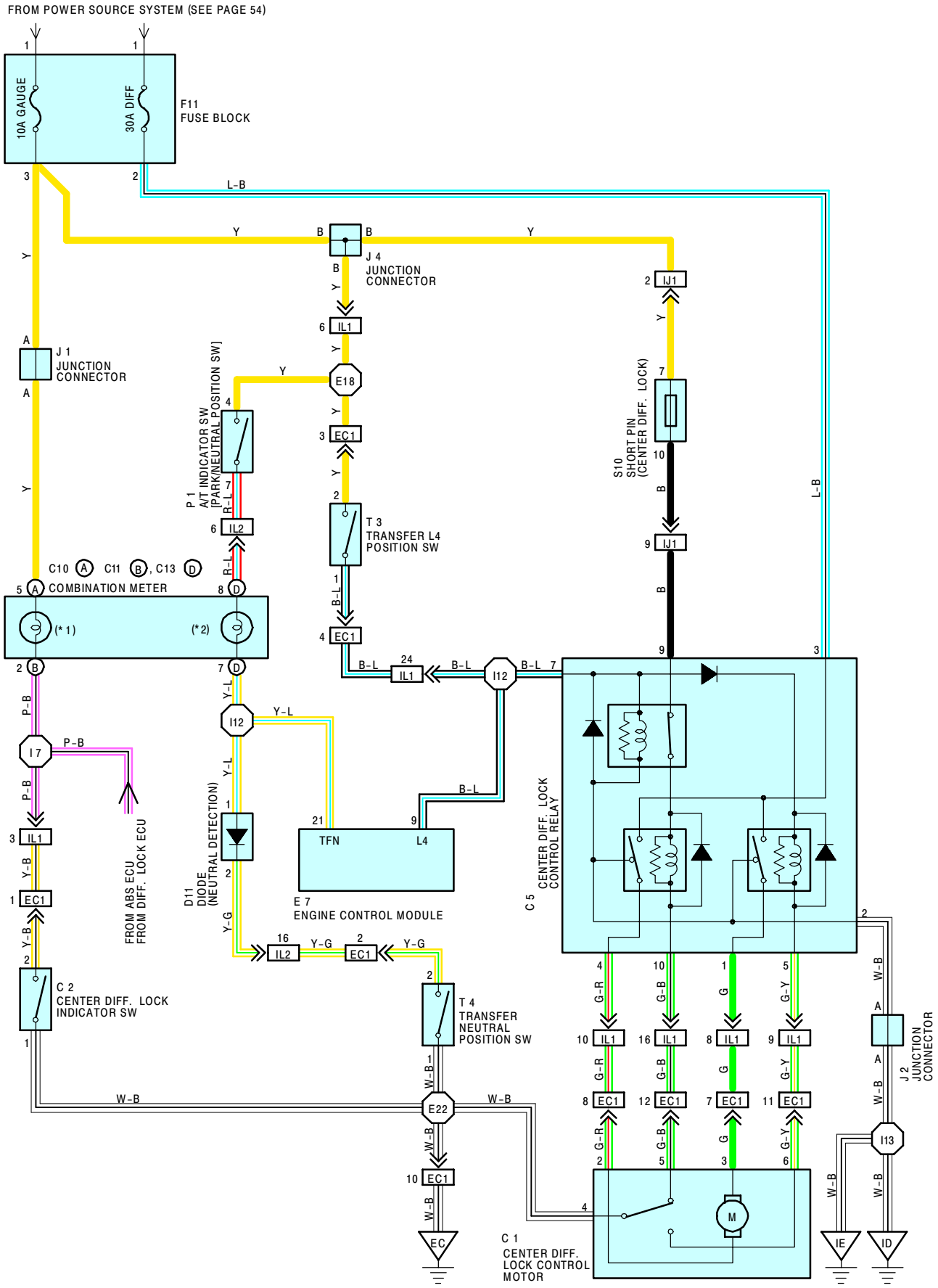

SERVICE HINTS

C 5 CENTER DIFF. LOCK CONTROL RELAY

3–GROUND : APPROX. **12** VOLTS WITH THE IGNITION SW AT **ON** POSITION
2–GROUND : ALWAYS CONTINUITY
7–GROUND : APPROX. **12** VOLTS WITH THE IGNITION SW AT **ON** POSITION AND FOUR–WHEEL DRIVE CONTROL LEVER AT **L4** POSITION

○ : PARTS LOCATION

CODE		SEE PAGE	CODE	SEE PAGE	CODE	SEE PAGE
C 1		22	**D11**	24	**P 1**	23
C 2		22	**E 7**	24	**S10**	25
C 5		24	**F11**	25	**T 3**	23
C10	A	24	**J 1**	25	**T 4**	23
C11	B	24	**J 2**	25		
C13	D	24	**J 4**	25		

▭ : CONNECTOR JOINING WIRE HARNESS AND WIRE HARNESS

CODE	SEE PAGE	JOINING WIRE HARNESS AND WIRE HARNESS (CONNECTOR LOCATION)
EC1	30	ENGINE WIRE AND TRANSMISSION WIRE (NEAR THE STARTER)
IJ1	34	COWL WIRE AND INSTRUMENT PANEL WIRE (INSTRUMENT PANEL CENTER)
IL1	34	ENGINE WIRE AND COWL WIRE (BEHIND GLOVE BOX)
IL2		

▽ : GROUND POINTS

CODE	SEE PAGE	GROUND POINTS LOCATION
EC	30	AIR INTAKE CHAMBER
ID	32	LEFT KICK PANEL
IE	32	RIGHT KICK PANEL

⬡ : SPLICE POINTS

CODE	SEE PAGE	WIRE HARNESS WITH SPLICE POINTS	CODE	SEE PAGE	WIRE HARNESS WITH SPLICE POINTS
E18	30	ENGINE WIRE	**I12**	34	COWL WIRE
E22	30	TRANSMISSION WIRE	**I13**		
I 7	34	COWL WIRE			

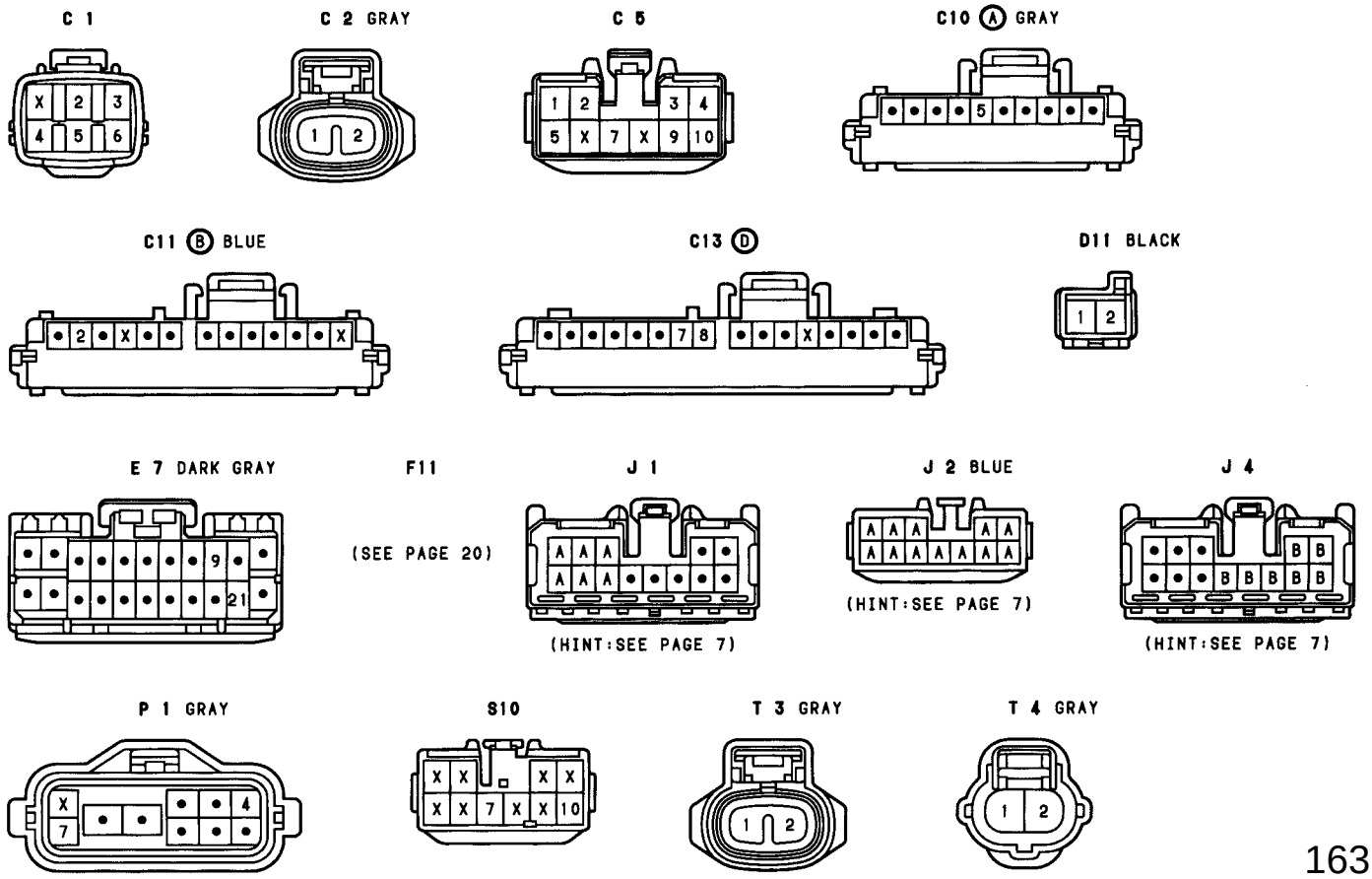

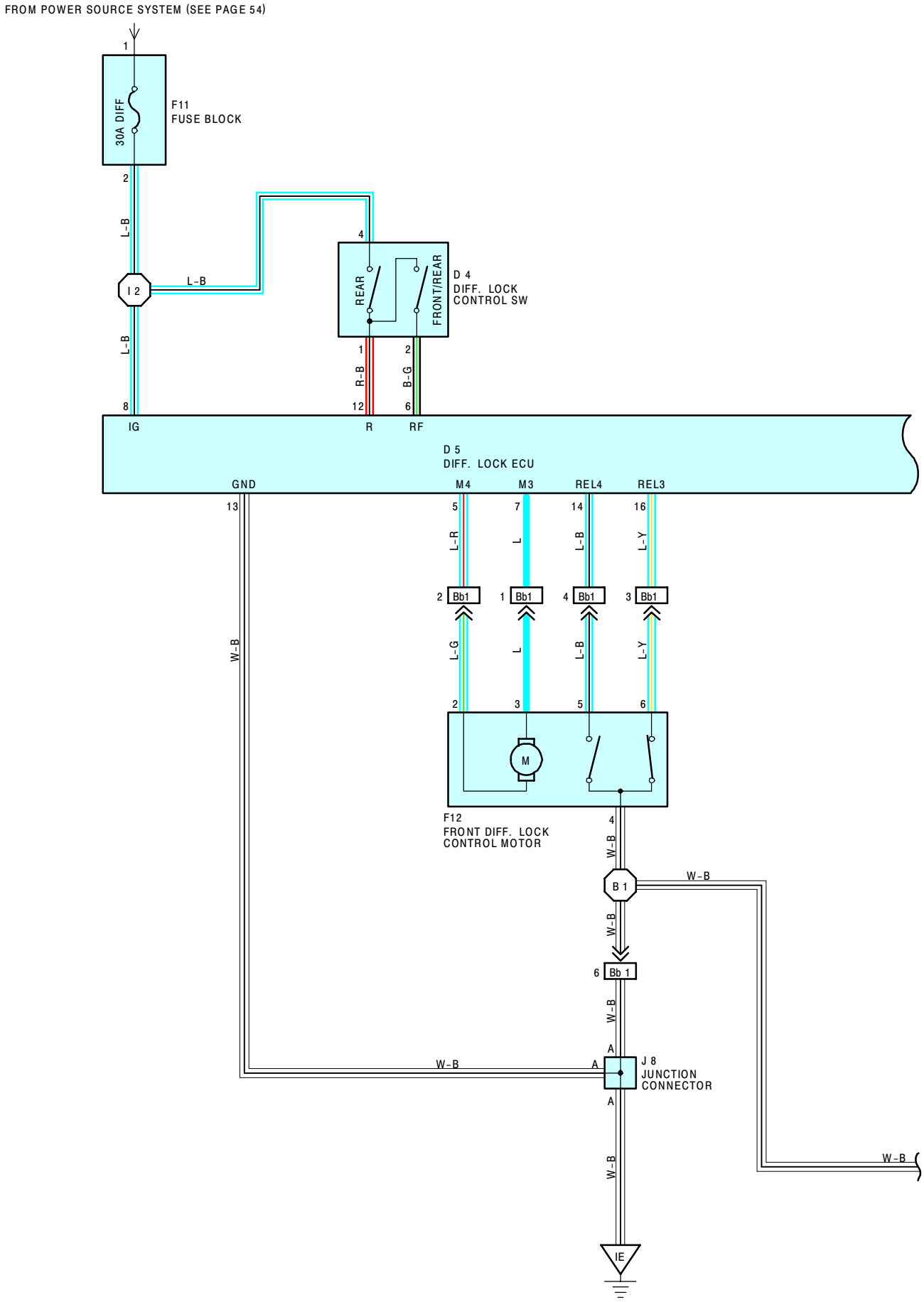
FROM POWER SOURCE SYSTEM (SEE PAGE 54)
1
30A DIFF
F11
FUSE BLOCK
2
L-B
I 2
L-B
L-B
4
REAR
FRONT/REAR
D 4
DIFF. LOCK
CONTROL SW
1
2
R-B
B-G
8
12
6
IG
R
RF
D 5
DIFF. LOCK ECU
GND
M4
M3
REL4
REL3
13
5
7
14
16
L-R
L
L-B
L-Y
2
Bb1
1
Bb1
4
Bb1
3
Bb1
W-B
L-G
L
L-B
L-Y
2
3
5
6
M
F12
FRONT DIFF. LOCK
CONTROL MOTOR
4
W-B
B 1
W-B
W-B
6
Bb 1
W-B
A
W-B
A
J 8
JUNCTION
CONNECTOR
A
W-B
W-B
IE

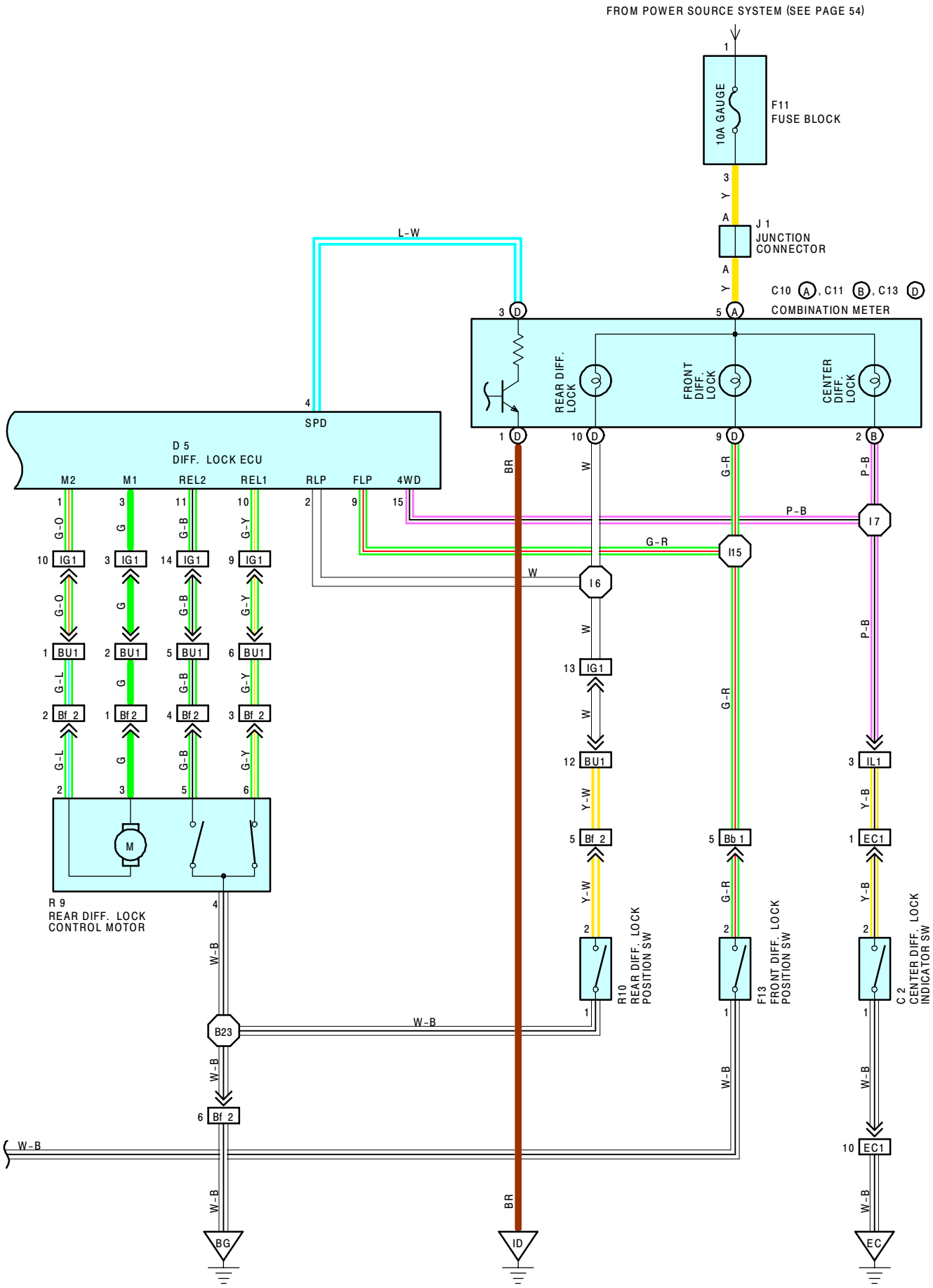
FROM POWER SOURCE SYSTEM (SEE PAGE 54)
10A GAUGE
F11
FUSE BLOCK
J 1
JUNCTION
CONNECTOR
C10 A, C11 B, C13 D
COMBINATION METER
REAR DIFF.
LOCK
FRONT
DIFF.
LOCK
CENTER
DIFF.
LOCK
L-W
SPD
D 5
DIFF. LOCK ECU
M2
M1
REL2
REL1
RLP
FLP
4WD
IG1
BU1
Bf 2
I6
I7
I15
IL1
EC1
Bb 1
R 9
REAR DIFF. LOCK
CONTROL MOTOR
R10
REAR DIFF. LOCK
POSITION SW
F13
FRONT DIFF. LOCK
POSITION SW
C 2
CENTER DIFF. LOCK
INDICATOR SW
B23
BG
ID
EC

FRONT/REAR DIFFERENTIAL LOCK

SYSTEM OUTLINE

THIS SYSTEM FREES OR LOCKS THE FRONT AND REAR DIFFERENTIALS ACCORDING TO THE POSITION OF THE DIFF. LOCK CONTROL SW. THE DIFFERENTIAL WILL LOCK ONLY WHEN THE CENTER DIFF. LOCK INDICATOR SW IS ON AND THE VEHICLE SPEED IS AT **8** KM/H (**5** MPH) OR LESS.

WHEN THE CENTER DIFF. LOCK INDICATOR SW IS OFF, DIFFERENTIAL LOCK DOES NOT OCCUR EVEN IF THE DIFF. LOCK CONTROL SW IS IN **RR** POSITION OR **FR.RR** POSITION.

WHEN THE DIFF. LOCK CONTROL SW IS SWITCHED FROM **OFF** POSITION TO **RR** POSITION, CURRENT FLOWS FROM THE **DIFF** FUSE THROUGH THE DIFF. LOCK CONTROL SW TO **TERMINAL 12** OF THE DIFF. LOCK ECU. IF THE LIMIT SW ON THE LOCK SIDE INSIDE THE REAR DIFF. LOCK CONTROL MOTOR IS ON AT THIS TIME, UNTIL THE LIMIT SW IS TURNED OFF, CURRENT FLOWS FROM THE **DIFF** FUSE TO **TERMINAL 8** OF THE DIFF. LOCK ECU → **TERMINAL 3** → **TERMINAL 3** OF THE REAR DIFF. LOCK CONTROL MOTOR → **TERMINAL 2** → **TERMINAL 1** OF THE DIFF. LOCK ECU → **TERMINAL 13** → **GROUND.** THIS DRIVES THE REAR DIFF. LOCK CONTROL MOTOR AND LOCKS THE REAR DIFFERENTIAL. WHEN THE REAR DIFFERENTIAL LOCKS, THE REAR DIFF. LOCK POSITION SW TURNS ON, LIGHTING UP THE REAR DIFF. LOCK INDICATOR LIGHT IN THE COMBINATION METER.

WHEN THE DIFF. LOCK CONTROL SW IS SWITCHED FROM **RR** POSITION TO **FR.RR** POSITION, CURRENT FLOWS FROM THE **DIFF** FUSE THROUGH THE DIFF. LOCK CONTROL SW TO **TERMINAL 6** OF THE DIFF. LOCK ECU. IF THE LIMIT SW ON THE LOCK SIDE INSIDE THE FRONT DIFF. LOCK CONTROL MOTOR IS ON AT THIS TIME, UNTIL THE LIMIT SW IS TURNED OFF, CURRENT FLOWS FROM THE **DIFF** FUSE TO **TERMINAL 8** OF THE DIFF. LOCK ECU → **TERMINAL 7** → **TERMINAL 3** OF THE FRONT DIFF. LOCK CONTROL MOTOR → **TERMINAL 2** → **TERMINAL 5** OF THE DIFF. LOCK ECU → **TERMINAL 13** → **GROUND**. THIS DRIVES THE FRONT DIFF. LOCK CONTROL MOTOR AND LOCKS THE FRONT DIFFERENTIAL. WHEN THE FRONT DIFFERENTIAL LOCKS, THE FRONT DIFF. LOCK POSITION SW TURNS ON, LIGHTING UP THE FRONT DIFF. LOCK INDICATOR LIGHT IN THE COMBINATION METER.

WHEN THE DIFF. LOCK CONTROL SW IS SWITCHED FROM **FR.RR** POSITION TO **RR** POSITION, CURRENT TO **TERMINAL 6** OF THE DIFF. LOCK ECU IS CUT OFF. IF THE LIMIT SW ON THE FREE SIDE INSIDE THE FRONT DIFF. LOCK CONTROL MOTOR IS ON AT THIS TIME, UNTIL THE LIMIT SW IS TURNED OFF, CURRENT FLOWS FROM THE **DIFF** FUSE TO **TERMINAL 8** OF THE DIFF. LOCK ECU → **TERMINAL 5** → **TERMINAL 2** OF THE FRONT DIFF. LOCK CONTROL MOTOR → **TERMINAL 3** → **TERMINAL 7** OF THE DIFF. LOCK ECU → **TERMINAL 13** → **GROUND**. THIS DRIVES THE FRONT DIFF. LOCK CONTROL MOTOR AND FREES THE FRONT DIFFERENTIAL. THIS CAUSES THE FRONT DIFF. LOCK POSITION SW AND THE FRONT DIFF. LOCK INDICATOR LIGHT INSIDE THE COMBINATION METER TO TURN OFF.

WHEN THE DIFF. LOCK CONTROL SW IS SWITCHED FROM **RR** POSITION TO **OFF** POSITION, CURRENT TO **TERMINAL 12** OF THE DIFF. LOCK ECU IS CUT OFF. IF THE LIMIT SW ON THE FREE SIDE INSIDE THE REAR DIFF. LOCK CONTROL MOTOR IS ON, UNTIL THE LIMIT SW IS TURNED OFF, CURRENT FLOWS FROM THE **DIFF** FUSE TO **TERMINAL 8** OF THE DIFF. LOCK ECU → **TERMINAL 1** → **TERMINAL 2** OF THE REAR DIFF. LOCK CONTROL MOTOR → **TERMINAL 3** → **TERMINAL 3** OF THE DIFF. LOCK ECU → **TERMINAL 13** → **GROUND**. THIS DRIVES THE REAR DIFF. LOCK CONTROL MOTOR AND FREES THE REAR DIFFERENTIAL. WHEN THE REAR DIFFERENTIAL IS FREE, THE REAR DIFF. LOCK POSITION SW AND THE REAR DIFF. LOCK INDICATOR LIGHT IN THE COMBINATION METER ARE TURNED OFF.

THE DIFF. LOCK INDICATOR LIGHT FLASHES WHEN:

∗ THE DIFF. LOCK CONTROL SW IS SWITCHED TO **RR** POSITION OR **FR.RR** POSITION DURING DIFFERENTIAL LOCK PROHIBITION CONDITIONS (VEHICLE SPEED ABOVE **8** KM/H (**5** MPH) OR CENTER DIFF. LOCK INDICATOR SW OFF).

∗ THE DIFF. LOCK POSITION SW IS TURNED OFF DURING OPERATION OF THE DIFF. LOCK CONTROL MOTOR.

SERVICE HINTS

D 4 DIFF. LOCK CONTROL SW

4–1 : CLOSED WITH THE DIFF. LOCK CONTROL SW AT **"RR"** POSITION OR **"FR.RR"** POSITION
4–2 : CLOSED WITH THE DIFF. LOCK CONTROL SW AT **"FR.RR"** POSITION

D 5 DIFF. LOCK ECU

(DISCONNECTED WIRING CONNECTOR FROM ECU)
13–GROUND : ALWAYS CONTINUITY
4–GROUND : PULSE GENERATION WITH VEHICLE MOVING
8–GROUND : **9–14** VOLTS WITH THE IGNITION SW ON
2–GROUND : ABOUT **0** VOLTS WITH THE REAR DIFF. LOCK INDICATOR LIGHT ON
: **9–14** VOLTS WITH THE REAR DIFF. LOCK INDICATOR LIGHT OFF
9–GROUND : ABOUT **0** VOLTS WITH THE FRONT DIFF. LOCK INDICATOR LIGHT ON
: **9–14** VOLTS WITH THE FRONT DIFF. LOCK INDICATOR LIGHT OFF
15–GROUND : ABOUT **0** VOLTS WITH THE CENTER DIFF. LOCK INDICATOR LIGHT ON
: **9–14** VOLTS WITH THE CENTER DIFF. LOCK INDICATOR LIGHT OFF

F12, R 9 FRONT, REAR DIFF. LOCK CONTROL MOTOR

2–3 : **0.3–100** Ω

○ : PARTS LOCATION

CODE		SEE PAGE	CODE	SEE PAGE	CODE	SEE PAGE
C 2		22	**D 5**	24	**J 8**	25
C10	A	24	**F11**	25	**R 9**	27
C11	B	24	**F12**	26	**R10**	27
C13	D	24	**F13**	26		
D 4		24	**J 1**	25		

▭ : CONNECTOR JOINING WIRE HARNESS AND WIRE HARNESS

CODE	SEE PAGE	JOINING WIRE HARNESS AND WIRE HARNESS (CONNECTOR LOCATION)
EC1	30	ENGINE WIRE AND TRANSMISSION WIRE (NEAR THE STARTER)
IG1	32	COWL WIRE AND FLOOR WIRE (LEFT KICK PANEL)
IL1	34	ENGINE WIRE AND COWL WIRE (BEHIND GLOVE BOX)
BU1	36	FLOOR NO. 3 WIRE AND FLOOR WIRE (LEFT QUARTER PANEL INNER)
Bb1	38	COWL WIRE AND FRAME WIRE (RIGHT FENDER)
Bf2	38	FLOOR NO. 3 WIRE AND FRAME NO. 2 WIRE (LEFT QUARTER PANEL INNER)

▽ : GROUND POINTS

CODE	SEE PAGE	GROUND POINTS LOCATION
EC	30	AIR INTAKE CHAMBER
ID	32	LEFT KICK PANEL
IE	32	RIGHT KICK PANEL
BG	36	LOWER BACK PANEL CENTER

⬡ : SPLICE POINTS

CODE	SEE PAGE	WIRE HARNESS WITH SPLICE POINTS	CODE	SEE PAGE	WIRE HARNESS WITH SPLICE POINTS
I 2	34	COWL WIRE	**I15**	34	COWL WIRE
I 6			**B 1**	38	FRAME WIRE
I 7			**B23**	38	FLAME NO. 2 WIRE

C 2 GRAY

C10 Ⓐ GRAY

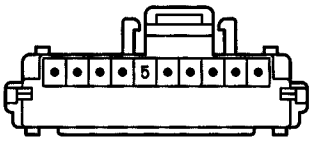

C11 Ⓑ BLUE

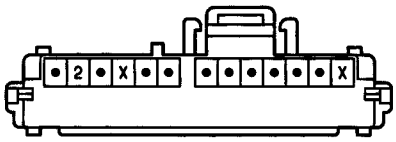

C13 Ⓓ

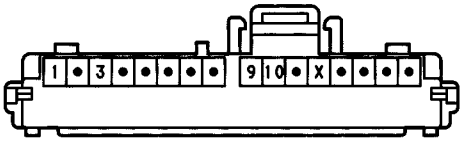

D 4

D 5 GRAY

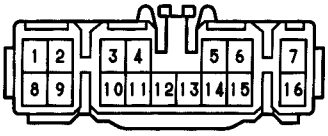

F11

(SEE PAGE 20)

F12

F13 GRAY

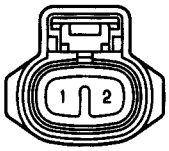

J 1

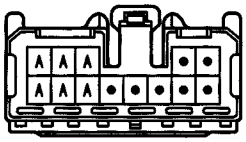

(HINT:SEE PAGE 7)

J 8 BLUE

(HINT:SEE PAGE 7)

R 9

R10 GRAY

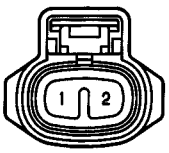

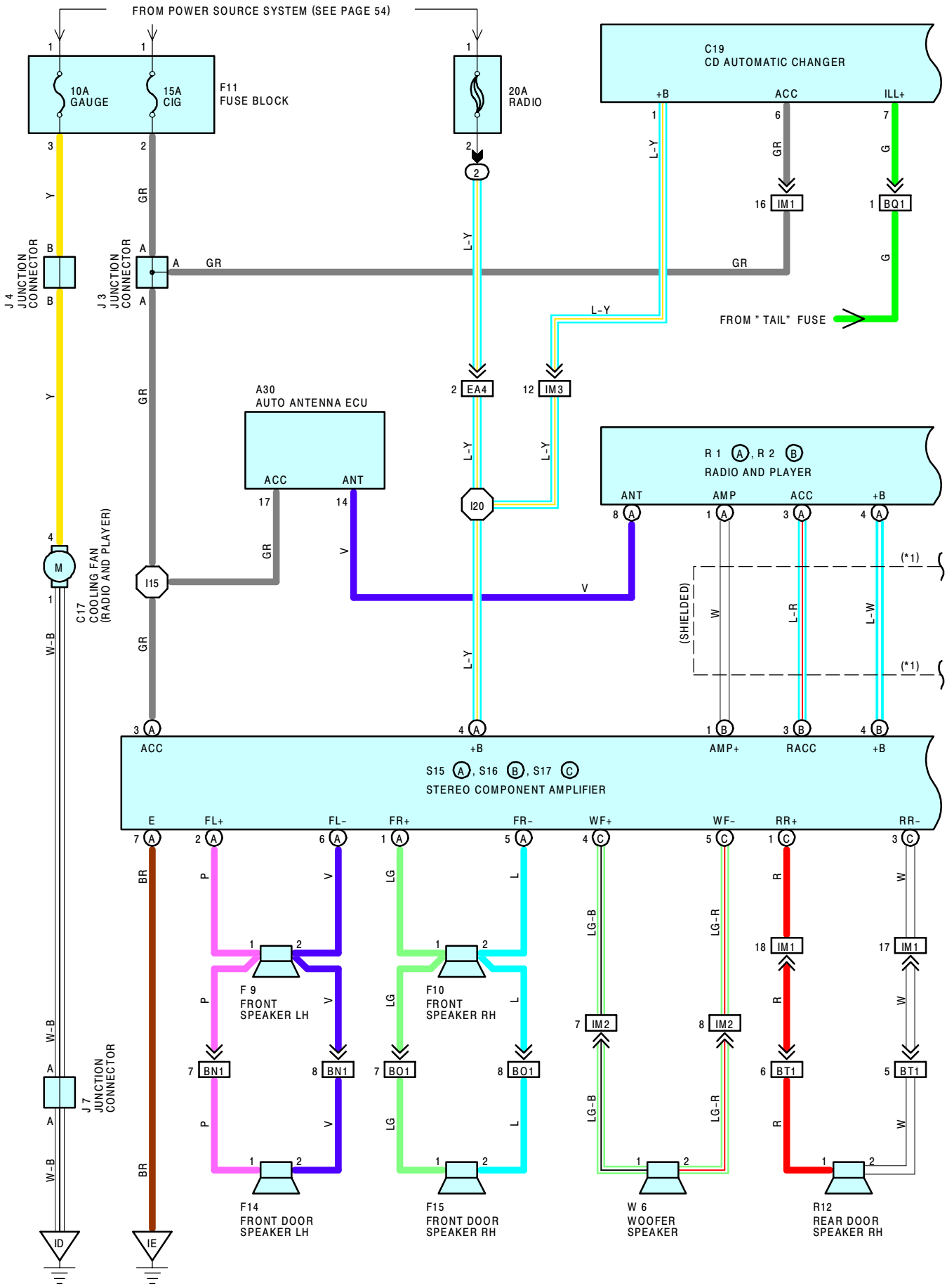
FROM POWER SOURCE SYSTEM (SEE PAGE 54)
10A GAUGE
15A CIG
F11 FUSE BLOCK
20A RADIO
C19 CD AUTOMATIC CHANGER
+B
ACC
ILL+
IM1
BQ1
FROM " TAIL" FUSE
J 4 JUNCTION CONNECTOR
J 3 JUNCTION CONNECTOR
A30 AUTO ANTENNA ECU
ACC
ANT
EA4
IM3
I20
I15
R 1 A, R 2 B
RADIO AND PLAYER
ANT
AMP
ACC
+B
(*1)
(SHIELDED)
C17 COOLING FAN (RADIO AND PLAYER)
S15 A, S16 B, S17 C
STEREO COMPONENT AMPLIFIER
ACC
+B
AMP+
RACC
+B
E
FL+
FL-
FR+
FR-
WF+
WF-
RR+
RR-
F 9 FRONT SPEAKER LH
F10 FRONT SPEAKER RH
BN1
BO1
IM2
BT1
J 7 JUNCTION CONNECTOR
F14 FRONT DOOR SPEAKER LH
F15 FRONT DOOR SPEAKER RH
W 6 WOOFER SPEAKER
R12 REAR DOOR SPEAKER RH
ID
IE

*1 : SHIELDED

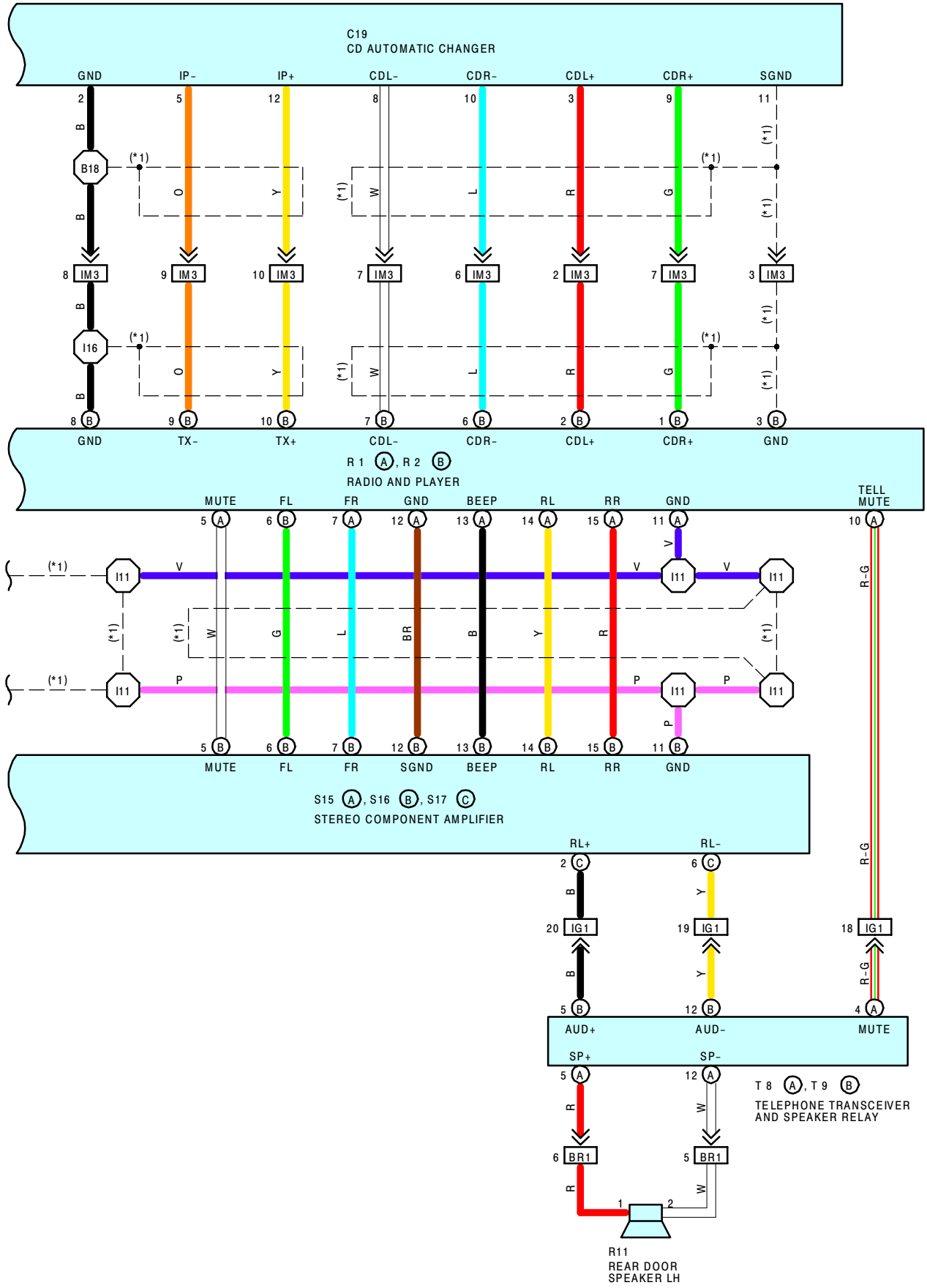
C19
CD AUTOMATIC CHANGER
GND
IP-
IP+
CDL-
CDR-
CDL+
CDR+
SGND
B18
IM3
I16
GND
TX-
TX+
CDL-
CDR-
CDL+
CDR+
GND
R 1 A, R 2 B
RADIO AND PLAYER
MUTE
FL
FR
GND
BEEP
RL
RR
GND
TELL MUTE
I11
MUTE
FL
FR
SGND
BEEP
RL
RR
GND
S15 A, S16 B, S17 C
STEREO COMPONENT AMPLIFIER
RL+
RL-
IG1
AUD+
AUD-
MUTE
SP+
SP-
T 8 A, T 9 B
TELEPHONE TRANSCEIVER AND SPEAKER RELAY
BR1
R11
REAR DOOR SPEAKER LH

RADIO AND PLAYER

SERVICE HINTS

C19 CD AUTOMATIC CHANGER
1–GROUND : ALWAYS APPROX. **12** VOLTS
6–GROUND : APPROX. **12** VOLTS WITH THE IGNITION SW AT **ON** OR **ACC** POSITION

S15 (A) STEREO COMPONENT AMPLIFIER
(A) 3–GROUND : APPROX. **12** VOLTS WITH THE IGNITION SW AT **ACC** OR **ON** POSITION
(A) 4–GROUND : ALWAYS APPROX. **12** VOLTS
(A) 7–GROUND : ALWAYS CONTINUITY

○ : PARTS LOCATION

CODE	SEE PAGE	CODE		SEE PAGE	CODE		SEE PAGE
A30	24	**F15**		26	**R12**		27
C17	24	**J 3**		25	**S15**	A	25
C19	26	**J 4**		25	**S16**	B	25
F 9	25	**J 7**		25	**S17**	C	25
F10	25	**R 1**	A	25	**T 8**	A	27
F11	25	**R 2**	B	25	**T 9**	B	27
F14	26	**R11**		27	**W 6**		27

⬭ : RELAY BLOCKS

CODE	SEE PAGE	RELAY BLOCKS (RELAY BLOCK LOCATION)
2	18	R/B NO. 2 (FRONT SIDE OF LEFT FENDER)

▭ : CONNECTOR JOINING WIRE HARNESS AND WIRE HARNESS

CODE	SEE PAGE	JOINING WIRE HARNESS AND WIRE HARNESS (CONNECTOR LOCATION)
EA4	30	COWL WIRE AND ENGINE ROOM MAIN WIRE (RIGHT FENDER)
IG1	32	COWL WIRE AND FLOOR WIRE (LEFT KICK PANEL)
IM1	34	COWL WIRE AND FLOOR NO. 2 WIRE (RIGHT KICK PANEL)
IM2		
IM3		
BN1	36	FRONT DOOR LH WIRE AND COWL WIRE (LEFT KICK PANEL)
BO1	36	FRONT DOOR RH WIRE AND COWL WIRE (RIGHT KICK PANEL)
BQ1	36	FLOOR NO. 2 WIRE AND FLOOR WIRE (UNDER THE CENTER CONSOLE)
BR1	36	REAR DOOR LH WIRE AND FLOOR WIRE (LEFT CENTER PILLAR)
BT1	36	REAR DOOR RH WIRE AND FLOOR NO. 2 WIRE (RIGHT CENTER PILLAR)

▽ : GROUND POINTS

CODE	SEE PAGE	GROUND POINTS LOCATION
ID	32	LEFT KICK PANEL
IE	32	RIGHT KICK PANEL

⬡ : SPLICE POINTS

CODE	SEE PAGE	WIRE HARNESS WITH SPLICE POINTS	CODE	SEE PAGE	WIRE HARNESS WITH SPLICE POINTS
I11	34	COWL WIRE	**I20**	34	ENGINE WIRE
I15			**B18**	38	FLOOR NO. 2 WIRE
I16					

A30

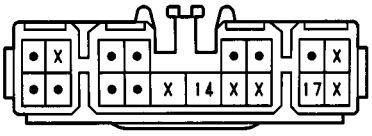

C17

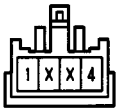

C19

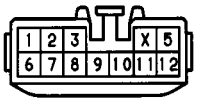

F 9

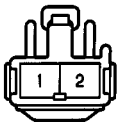

F10 BLUE

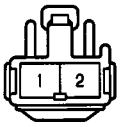

F11

(SEE PAGE 20)

F14,F15 BLUE

J 3

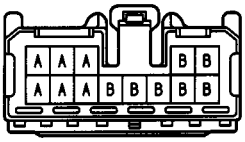

(HINT:SEE PAGE 7)

J 4

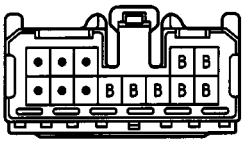

(HINT:SEE PAGE 7)

J 7 BLUE

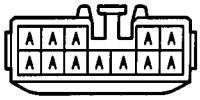

(HINT:SEE PAGE 7)

R 1 (A)

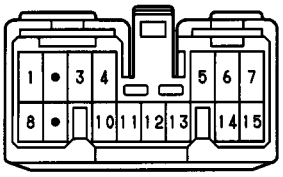

R 2 (B) DARK GRAY

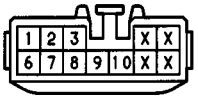

R11,R12

S15 (A) GRAY

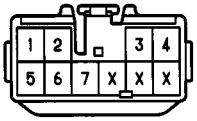

S16 (B)

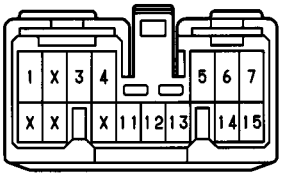

S17 (C) GRAY

T 8 (A)

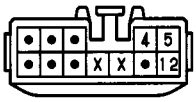

T 9 (B)

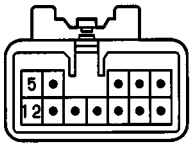

W 6

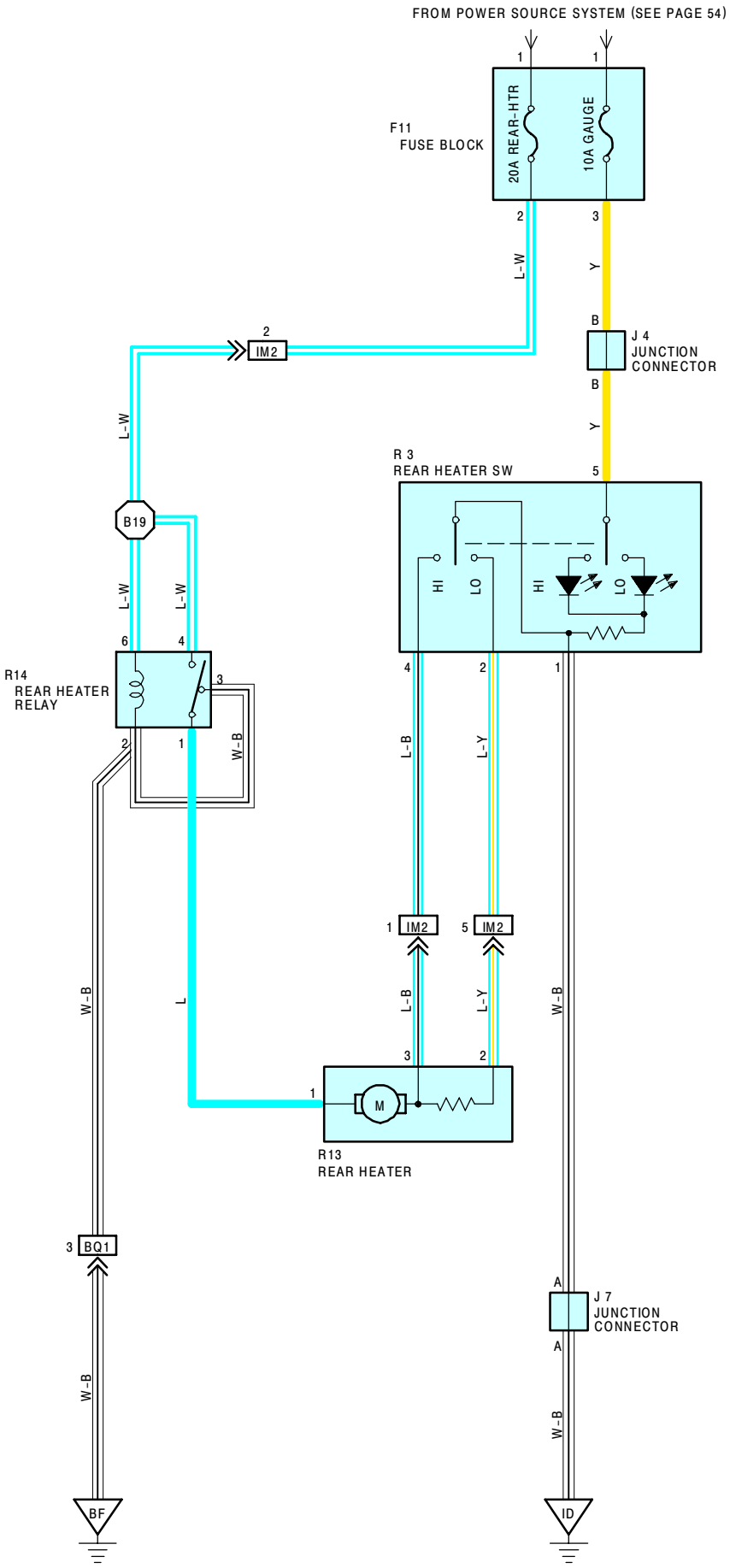
FROM POWER SOURCE SYSTEM (SEE PAGE 54)
F11
FUSE BLOCK
20A REAR-HTR
10A GAUGE
L-W
Y
J 4
JUNCTION
CONNECTOR
IM2
B19
R 3
REAR HEATER SW
HI
LO
R14
REAR HEATER
RELAY
W-B
L-B
L-Y
L
M
R13
REAR HEATER
BQ1
J 7
JUNCTION
CONNECTOR
BF
ID

SERVICE HINTS

R 3 REAR HEATER SW
2–1 : CLOSED WITH THE IGNITION SW AT ON AND THE REAR HEATER SW AT **LO** POSITION
4–1 : CLOSED WITH THE IGNITION SW AT ON AND THE REAR HEATER SW AT **HI** POSITION
R14 REAR HEATER RELAY
4–1 : CLOSED WITH THE IGNITION SW AT **ON** POSITION

○ : PARTS LOCATION

CODE	SEE PAGE	CODE	SEE PAGE	CODE	SEE PAGE
F11	25	**J 7**	25	**R13**	27
J 4	25	**R 3**	25	**R14**	27

▭ : CONNECTOR JOINING WIRE HARNESS AND WIRE HARNESS

CODE	SEE PAGE	JOINING WIRE HARNESS AND WIRE HARNESS (CONNECTOR LOCATION)
IM2	34	COWL WIRE AND FLOOR NO. 2 WIRE (RIGHT KICK PANEL)
BQ1	36	FLOOR NO. 2 WIRE AND FLOOR WIRE (UNDER THE CENTER CONSOLE)

▽ : GROUND POINTS

CODE	SEE PAGE	GROUND POINTS LOCATION
ID	32	LEFT KICK PANEL
BF	36	UNDER THE CENTER CONSOLE BOX

⬡ : SPLICE POINTS

CODE	SEE PAGE	WIRE HARNESS WITH SPLICE POINTS	CODE	SEE PAGE	WIRE HARNESS WITH SPLICE POINTS
B19	38	FLOOR NO. 2 WIRE			

F11

(SEE PAGE 20)

J 4

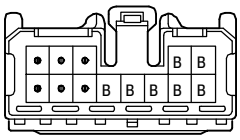

(HINT : SEE PAGE 7)

J 7 BLUE

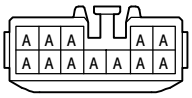

(HINT : SEE PAGE 7)

R 3 BLACK

R13

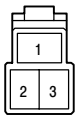

R14

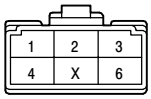

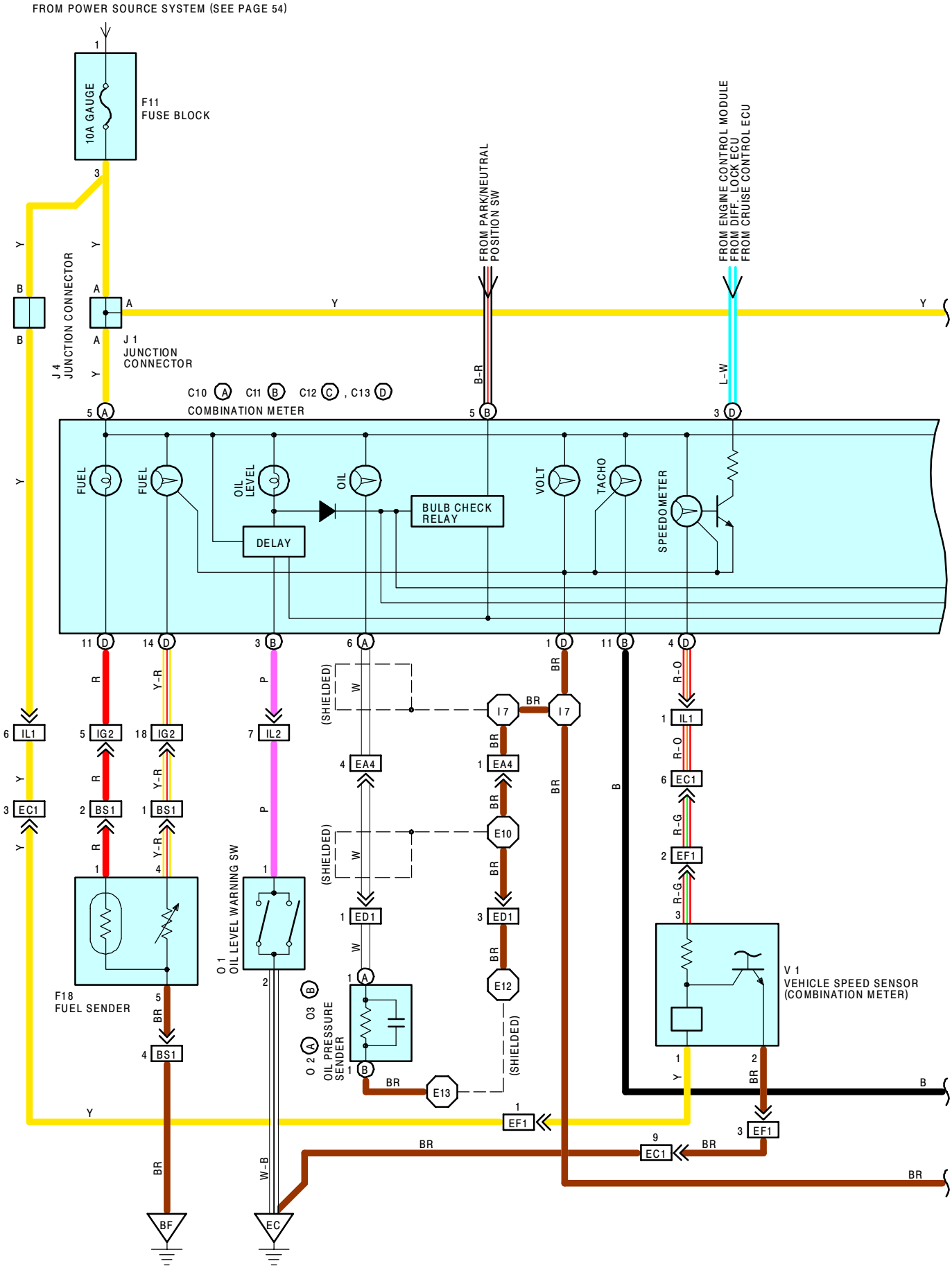
FROM POWER SOURCE SYSTEM (SEE PAGE 54)
10A GAUGE
F11
FUSE BLOCK
FROM PARK/NEUTRAL POSITION SW
FROM ENGINE CONTROL MODULE
FROM DIFF. LOCK ECU
FROM CRUISE CONTROL ECU
J 4
JUNCTION CONNECTOR
J 1
JUNCTION
CONNECTOR
C10 A C11 B C12 C , C13 D
COMBINATION METER
FUEL
FUEL
OIL LEVEL
OIL
DELAY
BULB CHECK RELAY
VOLT
TACHO
SPEEDOMETER
(SHIELDED)
(SHIELDED)
(SHIELDED)
F18
FUEL SENDER
O 1
OIL LEVEL WARNING SW
O 2 A
O 3 B
OIL PRESSURE SENDER
V 1
VEHICLE SPEED SENSOR
(COMBINATION METER)
BF
EC

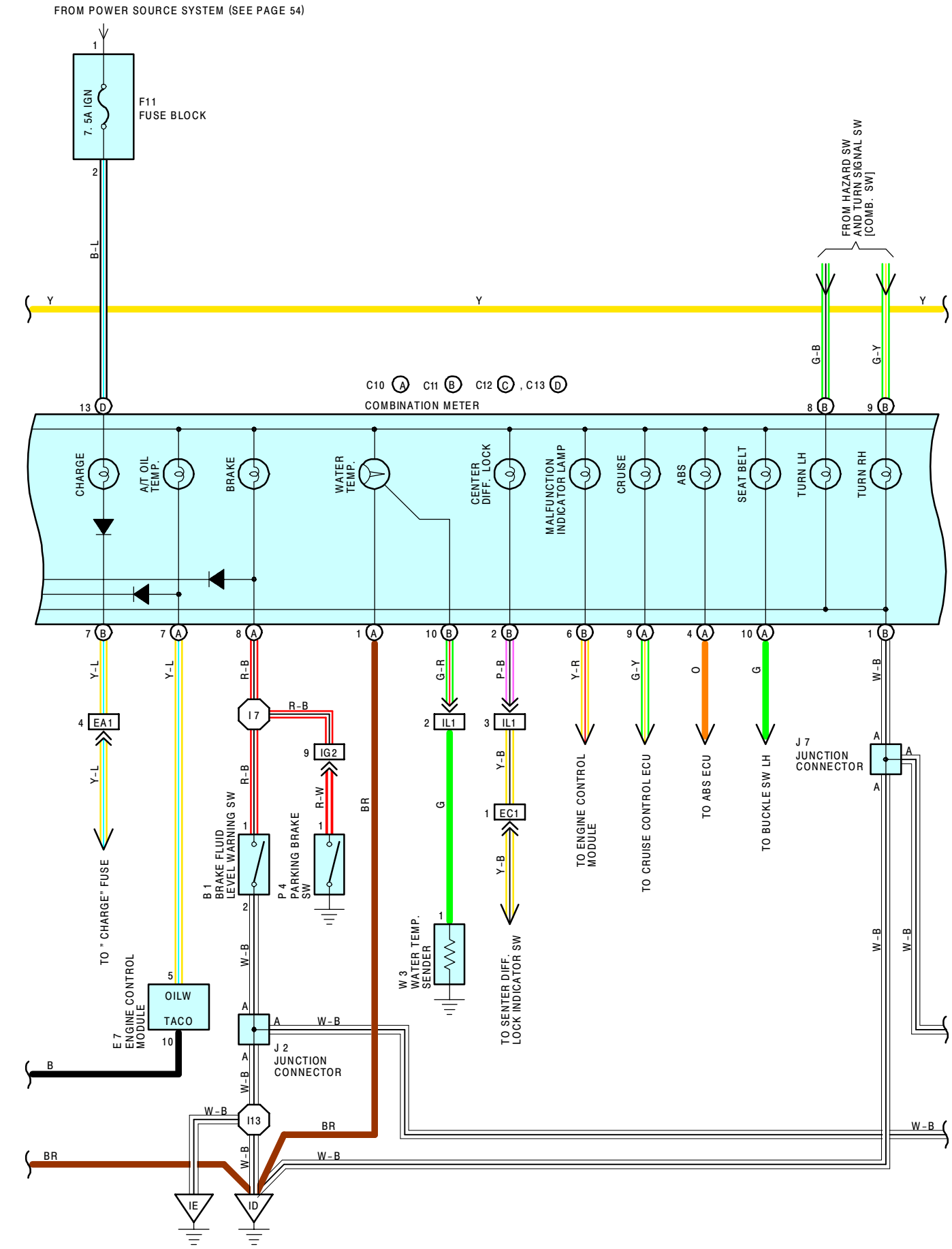
FROM POWER SOURCE SYSTEM (SEE PAGE 54)
7. 5A IGN
F11
FUSE BLOCK
B-L
Y
FROM HAZARD SW
AND TURN SIGNAL SW
[COMB. SW]
G-B
G-Y
C10 A C11 B C12 C , C13 D
COMBINATION METER
CHARGE
A/T OIL TEMP.
BRAKE
WATER TEMP.
CENTER DIFF. LOCK
MALFUNCTION INDICATOR LAMP
CRUISE
ABS
SEAT BELT
TURN LH
TURN RH
Y-L
R-B
G-R
P-B
Y-R
G-Y
O
G
W-B
EA1
I7
IG2
IL1
EC1
J 7
JUNCTION
CONNECTOR
TO " CHARGE" FUSE
B 1
BRAKE FLUID
LEVEL WARNING SW
P 4
PARKING BRAKE
SW
R-W
BR
Y-B
TO ENGINE CONTROL
MODULE
TO CRUISE CONTROL ECU
TO ABS ECU
TO BUCKLE SW LH
W 3
WATER TEMP.
SENDER
TO SENTER DIFF.
LOCK INDICATOR SW
E 7
ENGINE CONTROL
MODULE
OILW
TACO
J 2
JUNCTION
CONNECTOR
I13
IE
ID
B

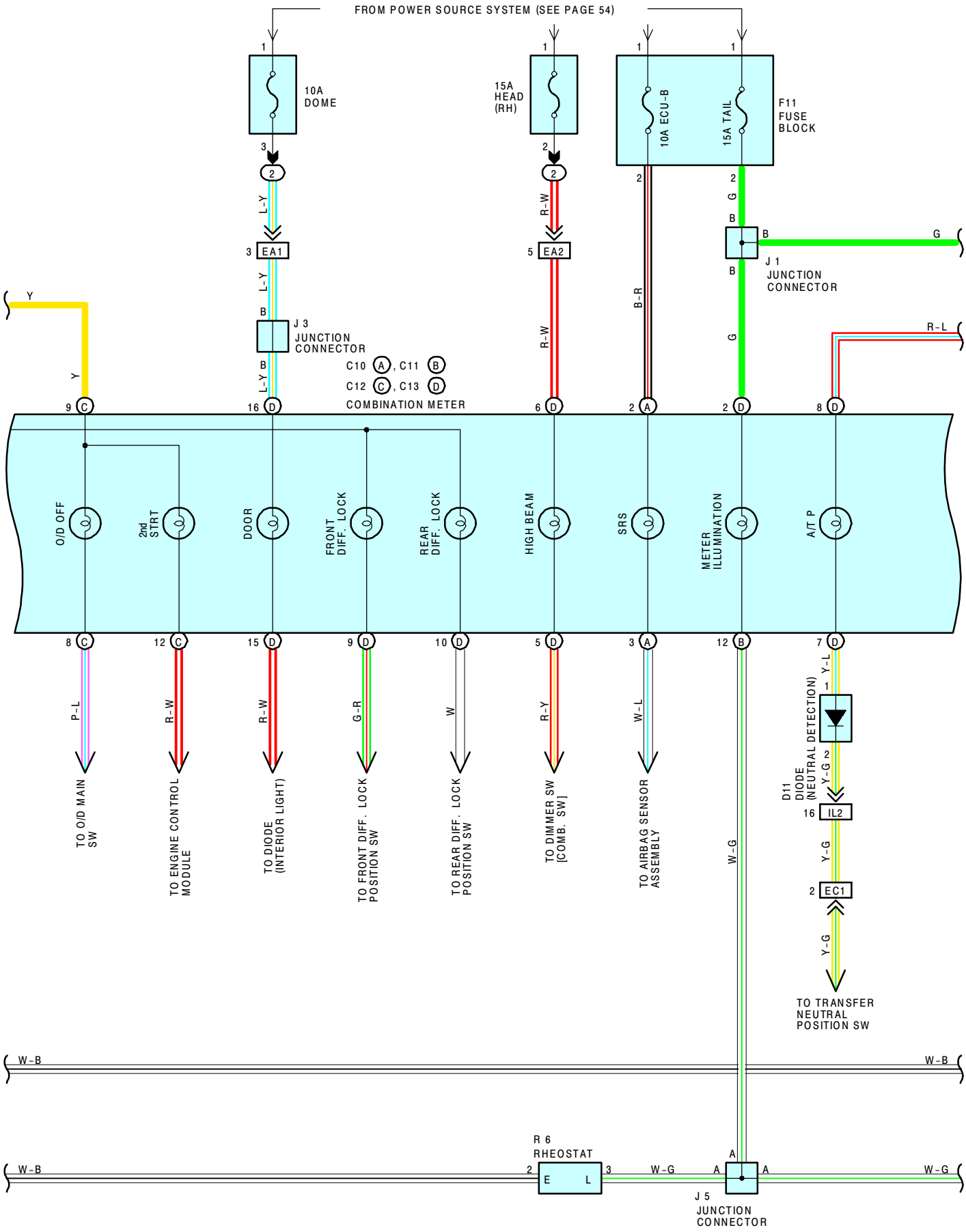
FROM POWER SOURCE SYSTEM (SEE PAGE 54)
10A DOME
15A HEAD (RH)
10A ECU-B
15A TAIL
F11 FUSE BLOCK
EA1
EA2
J 3 JUNCTION CONNECTOR
J 1 JUNCTION CONNECTOR
C10 A, C11 B
C12 C, C13 D
COMBINATION METER
O/D OFF
2nd STRT
DOOR
FRONT DIFF. LOCK
REAR DIFF. LOCK
HIGH BEAM
SRS
METER ILLUMINATION
A/T P
TO O/D MAIN SW
TO ENGINE CONTROL MODULE
TO DIODE (INTERIOR LIGHT)
TO FRONT DIFF. LOCK POSITION SW
TO REAR DIFF. LOCK POSITION SW
TO DIMMER SW [COMB. SW]
TO AIRBAG SENSOR ASSEMBLY
D11 DIODE (NEUTRAL DETECTION)
IL2
EC1
TO TRANSFER NEUTRAL POSITION SW
R 6 RHEOSTAT
J 5 JUNCTION CONNECTOR

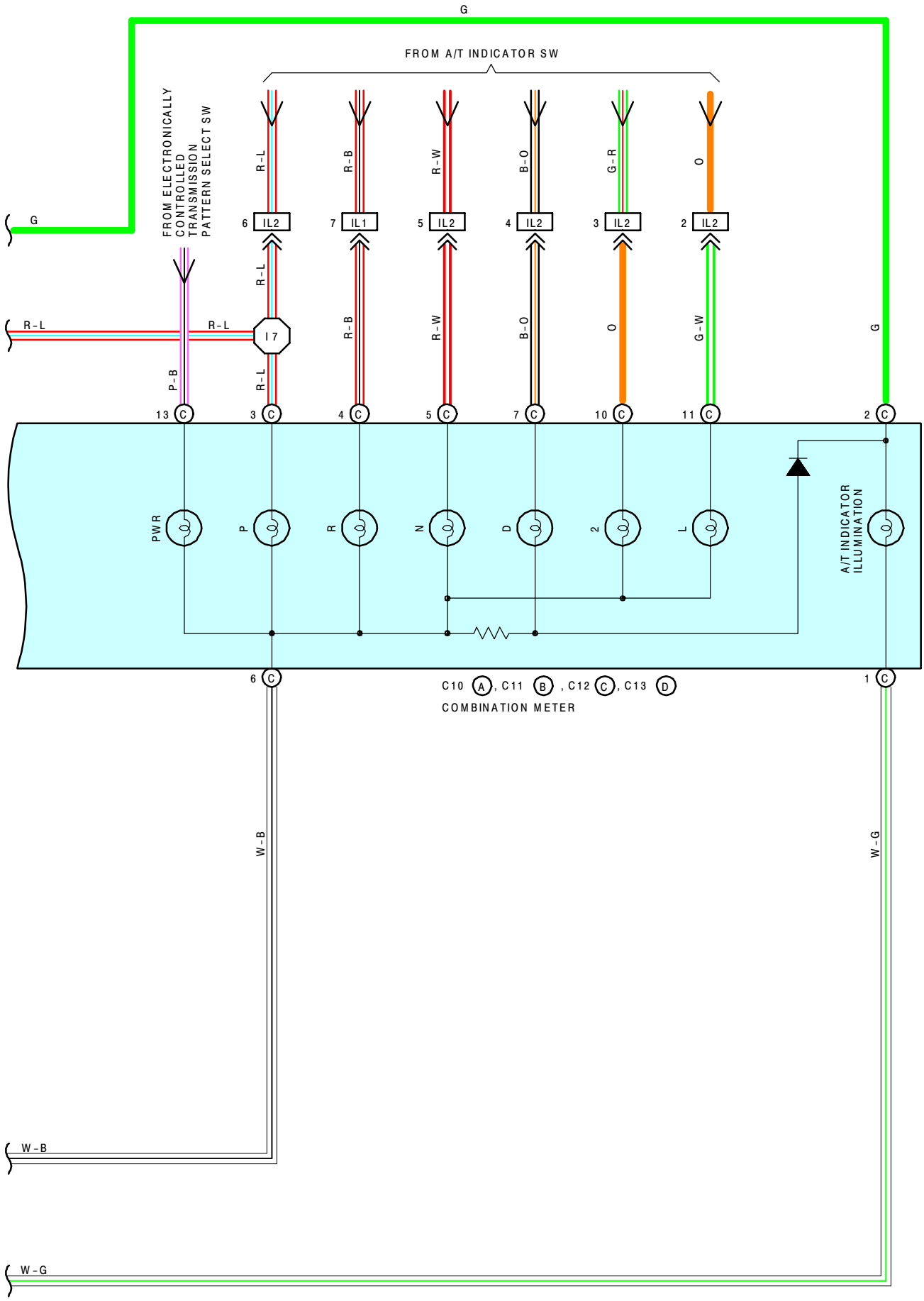
G
FROM A/T INDICATOR SW
FROM ELECTRONICALLY CONTROLLED TRANSMISSION PATTERN SELECT SW
R-L
R-B
R-W
B-O
G-R
O
IL2
IL1
I 7
P-B
G-W
PWR
P
R
N
D
2
L
A/T INDICATOR ILLUMINATION
C10 A, C11 B, C12 C, C13 D
COMBINATION METER
W-B
W-G

COMBINATION METER

SERVICE HINTS

B 1 BRAKE FLUID LEVEL WARNING SW
1–2 : CLOSED WITH THE FLOAT DOWN
C10 (A), C11 (B), C12 (C), C13 (D) COMBINATION METER
(D) 16–GROUND : ALWAYS APPROX. **12** VOLTS
(A) 5, **(D)** 13–GROUND : APPROX. **12** VOLTS WITH THE IGNITION SW AT **ON** POSITION
(A) 1, **(B)** 1, **(C)** 6, **(D)** 1–GROUND : ALWAYS CONTINUITY
P 4 PARKING BRAKE SW
1–GROUND : CLOSED WITH THE PARKING BRAKE LEVER PULLED UP

: PARTS LOCATION

CODE		SEE PAGE	CODE	SEE PAGE	CODE		SEE PAGE
B 1		22	**F18**	26	**O 2**	A	23
C10	A	24	**J 1**	25	**O 3**	B	23
C11	B	24	**J 2**	25	**P 4**		27
C12	C	24	**J 3**	25	**R 6**		25
C13	D	24	**J 4**	25	**V 1**		23
D11		24	**J 5**	25	**W 3**		23
E 7		24	**J 7**	25			
F11		25	**O 1**	23			

: RELAY BLOCKS

CODE	SEE PAGE	RELAY BLOCKS (RELAY BLOCK LOCATION)
2	18	R/B NO. 2 (FRONT SIDE OF LEFT FENDER)

: CONNECTOR JOINING WIRE HARNESS AND WIRE HARNESS

CODE	SEE PAGE	JOINING WIRE HARNESS AND WIRE HARNESS (CONNECTOR LOCATION)
EA1	30	COWL WIRE AND ENGINE ROOM MAIN WIRE (LEFT FENDER)
EA2		
EA4	30	COWL WIRE AND ENGINE ROOM MAIN WIRE (RIGHT FENDER)
EC1	30	ENGINE WIRE AND TRANSMISSION WIRE (NEAR THE STARTER)
ED1	30	OIL PRESSURE SWITCH WIRE AND ENGINE ROOM MAIN WIRE (NEAR THE AIR CLEANER)
EF1	30	TRANSMISSION WIRE AND SPEED SENSOR WIRE (NEAR THE TRANSMISSION)
IG2	32	COWL WIRE AND FLOOR WIRE (LEFT KICK PANEL)
IL1	34	ENGINE WIRE AND COWL WIRE (BEHIND GLOVE BOX)
IL2		
BS1	36	FLOOR WIRE AND LUGGAGE ROOM NO. 2 WIRE (BESIDE THE FUEL TANK)

: GROUND POINTS

CODE	SEE PAGE	GROUND POINTS LOCATION
EC	30	AIR INTAKE CHAMBER
ID	32	LEFT KICK PANEL
IE	32	RIGHT KICK PANEL
BF	36	UNDER THE CENTER CONSOLE BOX

: SPLICE POINTS

CODE	SEE PAGE	WIRE HARNESS WITH SPLICE POINTS	CODE	SEE PAGE	WIRE HARNESS WITH SPLICE POINTS
E10	30	ENGINE ROOM MAIN WIRE	**1 7**	34	COWL WIRE
E12	30	OIL PRESSURE SWITCH WIRE	**I13**		
E13					

B 1 GRAY

C10 (A) GRAY

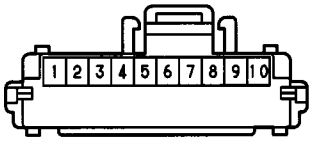

C11 (B) BLUE

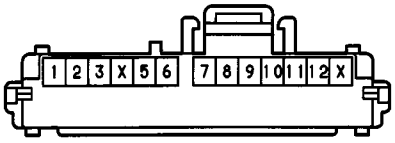

C12 (C) BROWN

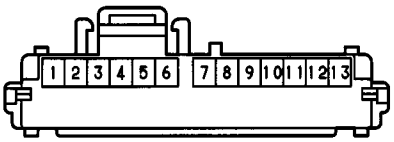

C13 (D)

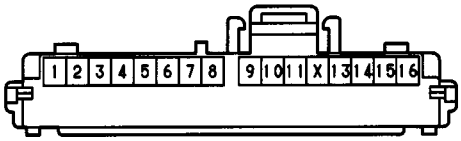

D11 BLACK

E 7 DARK GRAY

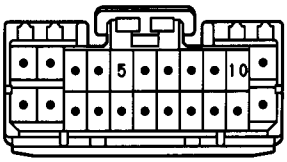

F11

(SEE PAGE 18)

F18 DARK GRAY

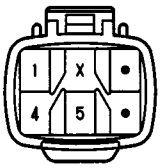

J 1

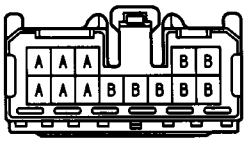

(HINT:SEE PAGE 7)

J 2 BLUE

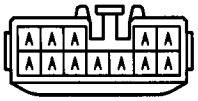

(HINT:SEE PAGE 7)

J 3

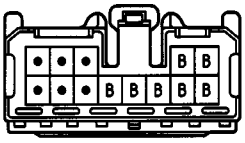

(HINT:SEE PAGE 7)

J 4

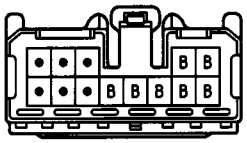

(HINT:SEE PAGE 7)

J 5 BLUE

(HINT:SEE PAGE 7)

J 7 BLUE

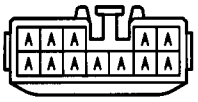

(HINT:SEE PAGE 7)

O 1 DARK GRAY

O 2 (A) BLACK

O 3 (B) GRAY

P 4

R 6

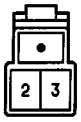

V 1 BLACK

W 3 GRAY

SYSTEM OUTLINE

1. HEATER BLOWER MOTOR OPERATION

CURRENT IS APPLIED AT ALL TIMES THROUGH THE **FL HEATER** FUSE TO **TERMINAL 5** OF THE HEATER RELAY. WHEN THE IGNITION SW IS TURNED ON, CURRENT FLOWS THROUGH THE **GAUGE** FUSE TO **TERMINAL 3** OF THE HEATER RELAY → **TERMINAL 1** → **TERMINAL HR** OF THE A/C AUTOMATIC AMPLIFIER. AT THE SAME TIME, CURRENT ALSO FLOWS FROM THE **GAUGE** FUSE TO **TERMINAL IG** OF THE A/C AUTOMATIC AMPLIFIER AND **TERMINAL 4** OF THE BLOWER HI RELAY → **TERMINAL 3** → **TERMINAL FR** OF THE A/C AUTOMATIC AMPLIFIER AND **TERMINAL (B) 13** OF THE BLOWER SW.

(LOW SPEED OPERATION)

WHEN THE BLOWER SW IS PUSHED TO **LO** POSITION, THE CURRENT TO **TERMINAL HR** OF THE A/C AUTOMATIC AMPLIFIER FLOWS TO **TERMINAL GND** OF THE A/C AUTOMATIC AMPLIFIER → **GROUND** AND TURNS THE HEATER RELAY ON. AS A RESULT, THE CURRENT TO **TERMINAL 5** OF THE HEATER RELAY FLOWS TO **TERMINAL 4** → **TERMINAL 1** OF THE BLOWER MOTOR → **TERMINAL 2** → **TERMINAL 1** OF THE A/C POWER TRANSISTOR → **TERMINAL 2** → **GROUND** AND CAUSES THE BLOWER MOTORS TO ROTATE AT LOW SPEED.

(HIGH SPEED OPERATION)

WHEN THE BLOWER SW IS PUSHED TO **HI** POSITION, THE CURRENT TO **TERMINAL HR** OF THE A/C AUTOMATIC AMPLIFIER FLOWS TO **TERMINAL GND** OF THE A/C AUTOMATIC AMPLIFIER → **GROUND** AND TURNS THE HEATER RELAY ON. AT THE SAME TIME, THE CURRENT TO **TERMINAL 4** OF THE BLOWER HI RELAY ALSO FLOWS TO **TERMINAL 3** OF THE RELAY **TERMINAL FR** OF THE A/C AUTOMATIC AMPLIFIER → **TERMINAL GND** → **GROUND** AND TURNS THE BLOWER HI RELAY ON. AS A RESULT, THE CURRENT TO **TERMINAL 5** OF THE HEATER RELAY FLOWS TO **TERMINAL 4** → **TERMINAL 1** OF THE BLOWER MOTOR → **TERMINAL 2** → **TERMINAL 1** OF THE BLOWER HI RELAY → **TERMINAL 2** → **GROUND** WITHOUT PASSING THROUGH THE BLOWER RESISTOR, CAUSING THE BLOWER MOTOR TO ROTATE AT HIGH SPEED.

(MEDIUM SPEED OPERATION)

WHEN THE BLOWER SW IS PUSHED TO **M1** OR **M2** POSITION**,** THE CURRENT TO **TERMINAL HR** OF THE A/C AUTOMATIC AMPLIFIER FLOWS TO **TERMINAL GND** → **GROUND** AND TURNS THE HEATER RELAY ON. THEN, THE CURRENT TO **TERMINAL IG** OF THE A/C AUTOMATIC AMPLIFIER FLOWS TO **TERMINAL BLW** → **TERMINAL 3** OF THE A/C POWER TRANSISTOR → **TERMINAL 2** → **GROUND**.

AS A RESULT, THE CURRENT TO **TERMINAL 5** OF THE HEATER RELAY FLOWS TO **TERMINAL 4** → **TERMINAL 1** OF THE BLOWER MOTOR → **TERMINAL 2** → **TERMINAL 1** OF THE A/C POWER TRANSISTOR → **TERMINAL 2** → **GROUND** AND THE BLOWER MOTOR IS ROTATED AT MEDIUM SPEED BY THE A/C AUTOMATIC AMPLIFIER CONTROLING THE CURRENT FLOWING FROM **TERMINAL 3** OF THE A/C POWER TRANSISTOR TO **TERMINAL 2.**

(DEF SYNCHRONIZED CONTROL FUNCTION)

WHEN THE DEF SW IN THE MODE SELECTION SW IS PUSHED, A SIGNAL IS INPUT INTO **TERMINAL DEF** OF THE A/C AUTOMATIC AMPLIFIER. THIS CAUSES THE A/C ON AND THE BLOWER SW IS TURNED TO AUTO MODE.

(AUTO FUCTION)

WHEN THE AUTO SW IN THE HEATER CONTROL SW IS PUSHED, A SIGNAL IS INPUT INTO **TERMINAL BAUTO** OF THE A/C AUTOMATIC AMPLIFIER. AT THE SAME TIME, THE ROOM TEMP. DECIDED BY THE HEATER CONTROL SW IS INPUT INTO **TERMINAL TSET** OF THE A/C AUTOMATIC AMPLIFIER AS A SIGNAL, A SIGNAL OF THE A/C SOLAR SENSOR IS INPUT INTO **TERMINAL TS** OF THE A/C AUTOMATIC AMPLIFIER AND A SIGNAL OF THE A/C ROOM TEMP. SENSOR IS INPUT INTO **TERMINAL TR** OF THE A/C AUTOMATIC AMPLIFIER. AS A RESULT, A/C SYSTEM IS ACTIVATED BY THE SIGNAL OF EACH SENSOR TO GET THE ROOM TEMP. DECIDED BY THE HEATER CONTROL SW AND THE A/C SYSTEM TAKES THE PROPER MEASURES FOR IT.

2. OPERATION OF AIR INLET CONTROL SERVO MOTOR

(SWITCHING FROM FRESH TO RECIRC)

WITH IGNITION SW TURNED ON, WHEN THE RECIRC SW IS PUSHED, CURRENT FLOWS FROM THE **GAUGE** FUSE TO **TERMINAL 1** OF THE AIR INLET CONTROL SERVO MOTOR → **TERMINAL 3** → **TERMINAL REC** OF THE A/C AUTOMATIC AMPLIFIER → **TERMINAL GND** → **GROUND**, THE MOTOR ROTATES AND THE DAMPER MOVES TO THE **RECIRC** SIDE. WHEN THE DAMPER IS MOVED TO THE **RECIRC** POSITON, THE CIRCUIT IS CUT OFF INSIDE THE SERVO MOTOR AND THE DAMPER STOPS AT THAT POSITION**.**

(SWITCHING FROM RECIRC TO FRESH)

WITH THE IGNITION SW TURNED ON, WHEN THE FRESH SW IS PUSHED, CURRENT FLOWS FROM **TERMINAL 1** OF THE AIR INLET CONTROL SERVO MOTOR → **TERMINAL 2** → **TERMINAL FRS** OF THE A/C AUTOMATIC AMPLIFIER → **TERMINAL GND** → **GROUND**, THE MOTOR ROTATES AND THE DAMPER MOVES TO THE **FRESH** SIDE. WHEN THE DAMPER IS MOVED TO THE **FRESH** POSITION, THE CIRCUIT IS CUT OFF INSIDE THE SERVO MOTOR AND THE DAMPER STOPS AT THAT POSITION.

3. OPERATION OF AIR VENT MODE CONTROL SERVO MOTOR

WITH THE IGNITION SW TURNED ON, CURRENT FLOWS FROM THE **GAUGE** FUSE TO **TERMINAL 5** OF THE AIR VENT MODE CONTROL SERVO MOTOR → **TERMINAL 6** → **GROUND**, AND THE DAMPER MOVES TO THE POSITION OF THE MODE SELECTION SW ON THE CONTROL SW WHICH IS ON. WHEN THE FOOT SW OF THE HEATER CONTROL SW IS TURNED ON WITH THE **DEF** POSITION, A SIGNAL IS INPUT FROM **TERMINAL 7** OF THE AIR VENT MODE CONTROL SERVO MOTOR TO **TERMINAL (B) 4** OF THE HEATER CONTROL SW. AS A RESULT, THE SERVO MOTOR OPERATES UNTIL THE DAMPER REACHES TO **DEF** POSITION. WHEN THIS OCCURS, THE SIGNAL TO THE HEATER CONTROL SW IS SHUT OFF AND ROTATION OF THE MOTOR STOPS. SWITCHING TO OTHER MOVEMENT IS CONTROLLED BY THE SERVO MOTOR ACCORDING TO THE FOLLOWING SIGNALS:

1. **FACE** POSITION, A SIGNAL INPUT FROM **TERMINAL 1** OF THE SERVO MOTOR TO **TERMINAL (A) 14** OF THE HEATER CONTROL SW.

2. **BI–LEVEL** POSITION, A SIGNAL INPUT FROM **TERMINAL 2** OF THE SERVO MOTOR TO **TERMINAL (A) 12** OF THE HEATER CONTROL SW.

3. **FOOT** POSITION, A SIGNAL INPUT FROM **TERMINAL 3** OF THE SERVO MOTOR TO **TERMINAL (A) 7** OF THE HEATER CONTROL SW.

4. **FOOT/DEF** POSITION, A SIGNAL INPUT FROM **TERMINAL 4** OF THE SERVO MOTOR TO **TERMINAL (B) 11** OF THE HEATER CONTROL SW.

4. AIR MIX CONTROL SERVO MOTOR

VOLTAGE IS APPLIED TO **TERMINALS 11** AND **12** OF THE A/C SYSTEM AMPLIFIER FROM THE TEMPERATURE CONTROL LEVER INSIDE THE HEATER CONTROL SW AND FROM THE POTENTIOMETER INSIDE THE AIR MIX CONTROL SERVO MOTOR. THIS VOLTAGE IS KEPT AT A FIXED LEVEL BY THE A/C SYSTEM AMPLIFIER. WHEN THE TEMPERATURE CONTROL LEVER OF THE HEATER CONTROL SW IS MOVED TO 'COOL', THE VOLTAGE APPLIED TO **TERMINAL 12** OF THE A/C SYSTEM AMPLIFIER FROM **TERMINAL (B) 3** OF THE HEATER CONTROL SW CHANGES. AT THIS TIME, THE A/C SYSTEM AMPLIFIER COMPARES THE VOLTAGE FROM **TERMINAL 2** OF THE AIR MIX CONTROL SERVO MOTOR WITH THE VOLTAGE APPLIED TO **TERMINAL 11** OF THE A/C SYSTEM AMPLIFIER. THIS ACTIVATES THE A/C SYSTEM AMPLIFIER, SO THE CURRENT FLOWS FROM **TERMINAL 6** OF THE AMPLIFIER TO **TERMINAL 5** OF THE AIR MIX CONTROL SERVO MOTOR → **TERMINAL 4** → **TERMINAL 1** OF THE A/C SYSTEM AMPLIFIER, AND THE AIR MIX CONTROL SERVO MOTOR CHANGES TO THE 'COOL' SIDE. THEN WHEN THE VOLTAGE FROM THE POTENTIOMETER INSIDE THE SERVO MOTOR EQUALS THE VOLTAGE FROM THE TEMPERATURE CONTROL LEVER INSIDE THE HEATER CONTROL SW, THE A/C SYSTEM AMPLIFIER CUTS OFF POWER TO THE MOTOR. WHEN THE TEMPERATURE CONTROL LEVER IS MOVED TO THE 'WARM' SIDE, THE A/C SYSTEM AMPLIFIER OPERATES THE SAME AS FOR 'COOL' OPERATION, SO THE CURRENT FLOWS FROM **TERMINAL 1** OF THE A/C SYSTEM AMPLIFIER TO **TERMINAL 4** OF THE AIR MIX CONTROL SERVO MOTOR → **TERMINAL 5** → **TERMINAL 6** OF THE A/C SYSTEM AMPLIFIER, CHANGING THE MOTOR TO THE 'WARM' SIDE. WHEN THE VOLTAGE OF THE POTENTIOMETER AND THE VOLTAGE OF THE TEMPERATURE CONTROL LEVEL ARE THE SAME, POWER TO THE MOTOR IS CUT OFF.

5. AIR CONDITIONING OPERATION

THE A/C AUTOMATIC AMPLIFIER RECEIVES VARIOUS SIGNALS, I.E., THE ENGINE RPM FROM THE IGNITER, OUTLET TEMPERATURE SIGNAL FROM THE A/C AMBIENT TEMP. SENSOR, COOLANT TEMPERATURE FROM THE A/C THERMISTOR, ETC.

WHEN THE ENGINE IS STARTED AND THE A/C SW IS ON, A SIGNAL IS INPUT TO THE A/C AUTOMATIC AMPLIFIER.

AS A RESULT, THE GROUND CIRCUIT IN THE A/C AUTOMATIC AMPLIFIER IS CLOSED.

AT THE SAME TIME, THE ENGINE CONTROL MODULE DETECTS THE A/C MAGNETIC CLUTCH IS ON AND THE A/C AUTOMATIC AMPLIFIER OPERATES.

OPEN DIRECTION TO AVOID LOWERING THE ENGINE RPM DURING A/C OPERATING.

IF THE A/C AUTOMATIC AMPLIFIER DETECTS THE FOLLOWING CONDITIONS, IT STOPS THE AIR CONDITIONING.

* THE TEMPERATURE AT THE AIR VENTS IS LOW.
* THERE IS A MARKED DIFFERENCE BETWEEN THE COMPRESSOR SPEED AND THE ENGINE SPEED.
* THE REFRIGERANT PRESSURE IS ABNORMALLY HIGH OR ABNORMALLY LOW.
* THE ENGINE SPEED DECREASES.
* RAPID ACCELERATION OCCURS.

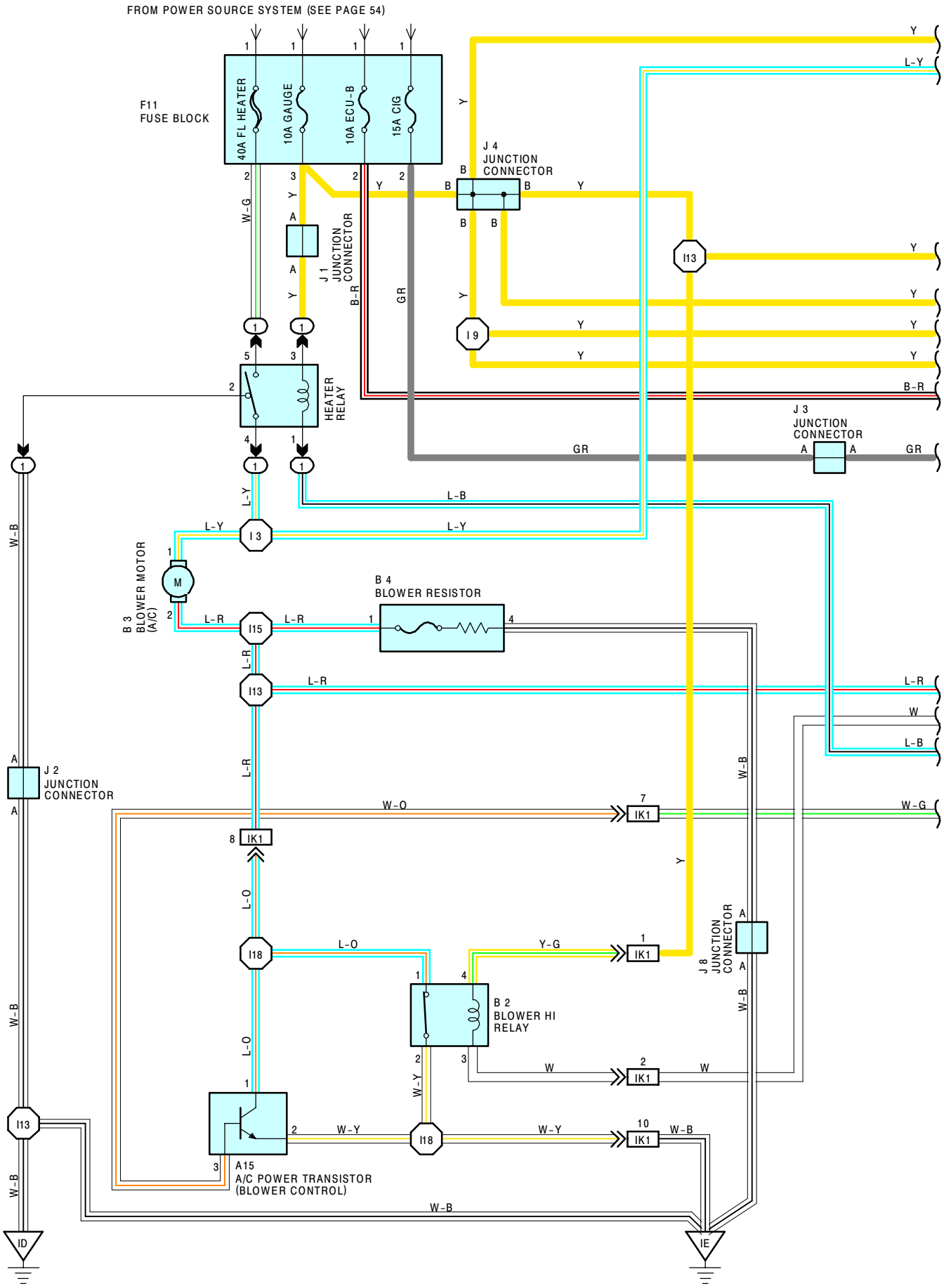
FROM POWER SOURCE SYSTEM (SEE PAGE 54)
F11
FUSE BLOCK
40A FL HEATER
10A GAUGE
10A ECU-B
15A CIG
J 4
JUNCTION
CONNECTOR
J 1
JUNCTION
CONNECTOR
HEATER
RELAY
J 3
JUNCTION
CONNECTOR
B 3
BLOWER MOTOR
(A/C)
B 4
BLOWER RESISTOR
J 2
JUNCTION
CONNECTOR
J 8
JUNCTION
CONNECTOR
B 2
BLOWER HI
RELAY
A15
A/C POWER TRANSISTOR
(BLOWER CONTROL)
I13
I9
I3
I15
I18
IK1
M
ID
IE
Y
L-Y
W-G
B-R
GR
L-B
L-R
W
W-B
W-O
L-O
Y-G
W-Y

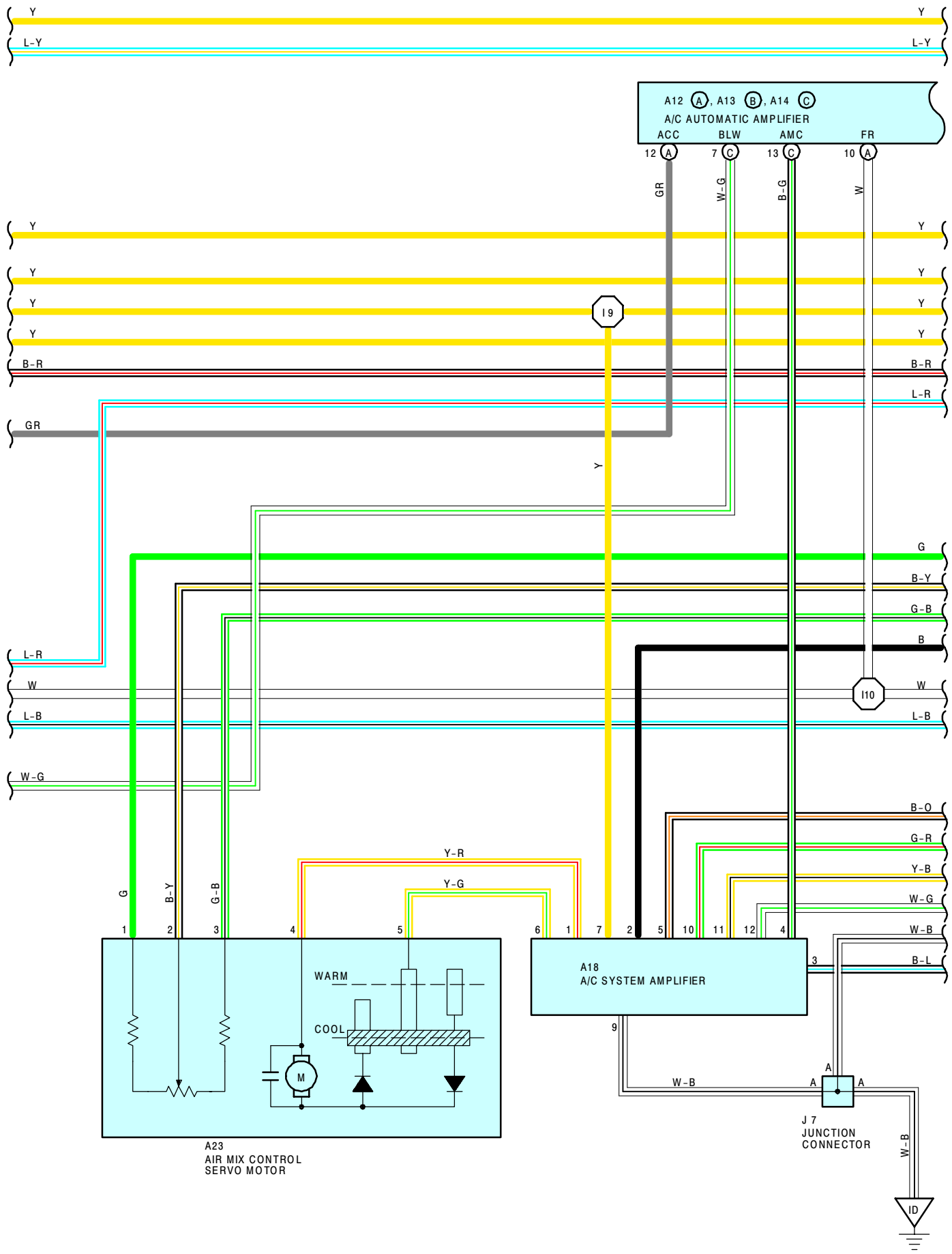
A12 A, A13 B, A14 C
A/C AUTOMATIC AMPLIFIER
ACC
BLW
AMC
FR
12 A
7 C
13 C
10 A
GR
W-G
B-G
W
Y
L-Y
I9
B-R
L-R
G
B-Y
G-B
B
L-R
W
L-B
W-G
I10
B-O
G-R
Y-B
W-G
W-B
B-L
Y-R
Y-G
1
2
3
4
5
6
1
7
2
5
10
11
12
4
3
9
WARM
COOL
M
A23
AIR MIX CONTROL
SERVO MOTOR
A18
A/C SYSTEM AMPLIFIER
W-B
A
A
A
J 7
JUNCTION
CONNECTOR
W-B
ID

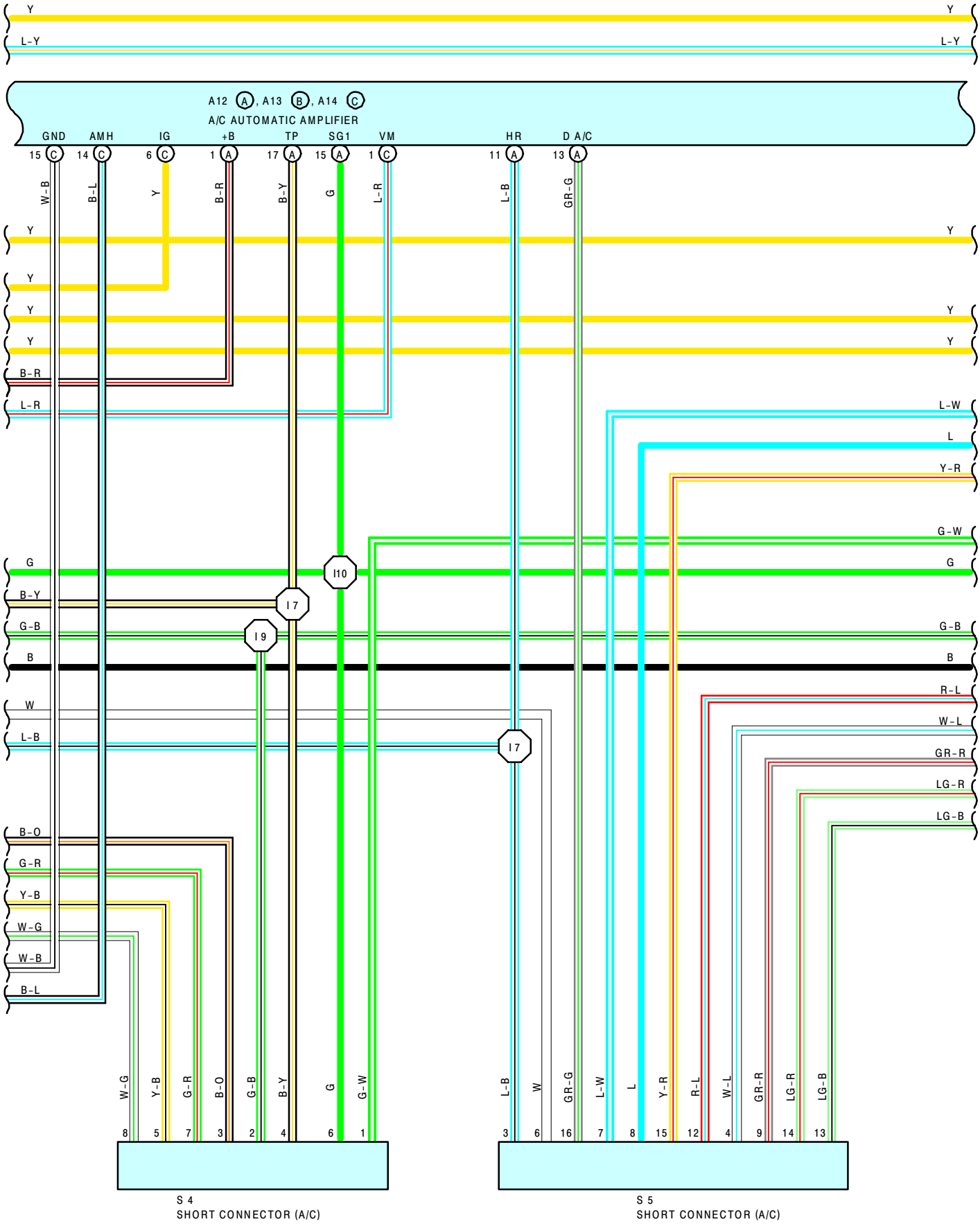
A12 A, A13 B, A14 C
A/C AUTOMATIC AMPLIFIER
GND
AMH
IG
+B
TP
SG1
VM
HR
D A/C
15 C
14 C
6 C
1 A
17 A
15 A
1 C
11 A
13 A
W-B
B-L
Y
B-R
B-Y
G
L-R
L-B
GR-G
Y
L-Y
L-W
L
Y-R
G-W
G
B-Y
G-B
B
W
L-B
R-L
W-L
GR-R
LG-R
LG-B
B-O
G-R
Y-B
W-G
W-B
B-L
I10
I7
I9
I7
W-G
Y-B
G-R
B-O
G-B
B-Y
G
G-W
L-B
W
GR-G
L-W
L
Y-R
R-L
W-L
GR-R
LG-R
LG-B
8
5
7
3
2
4
6
1
3
6
16
7
8
15
12
4
9
14
13
S 4
SHORT CONNECTOR (A/C)
S 5
SHORT CONNECTOR (A/C)

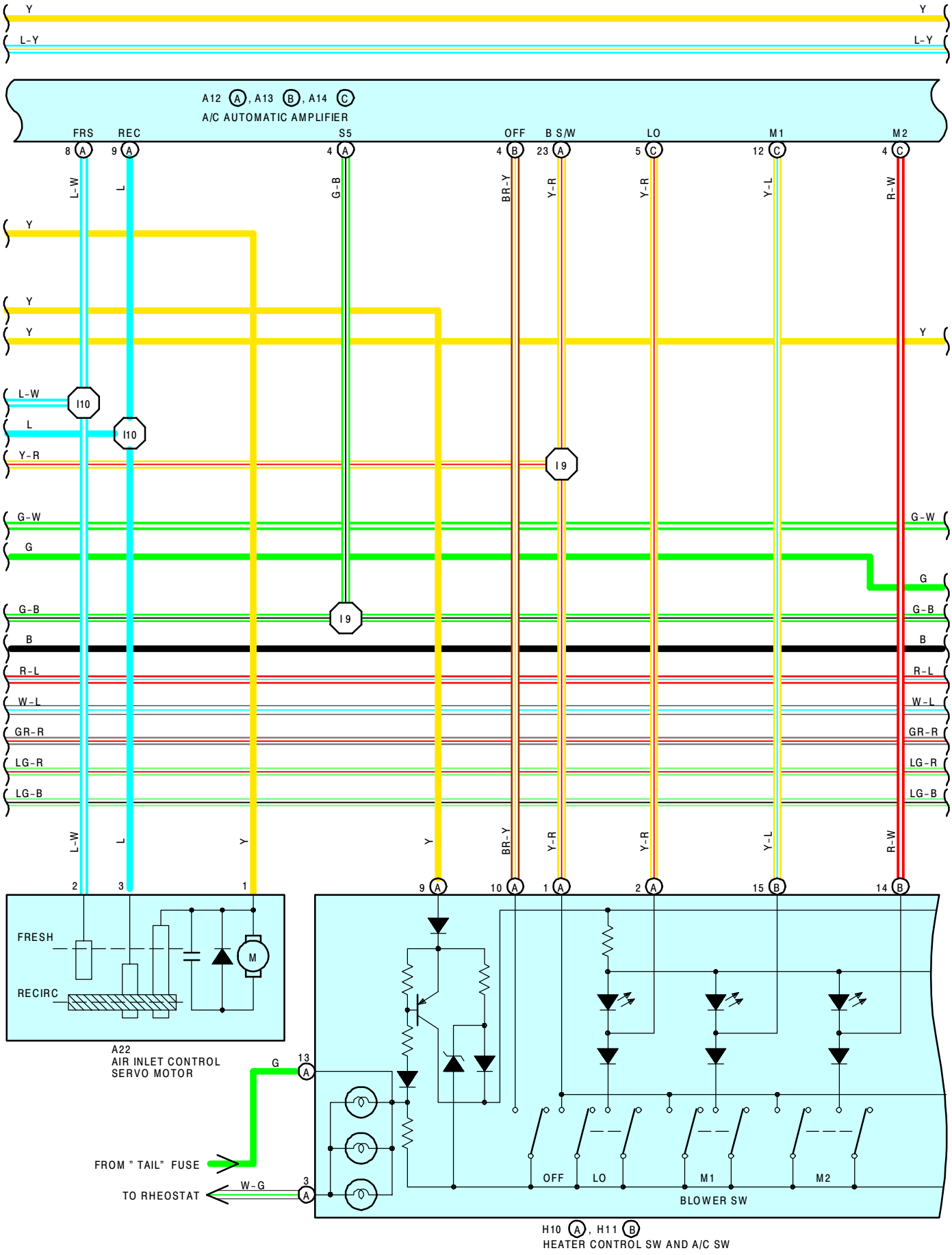
A12 A, A13 B, A14 C
A/C AUTOMATIC AMPLIFIER
FRS
REC
S5
OFF
B S/W
LO
M1
M2
8 A
9 A
4 A
4 B
23 A
5 C
12 C
4 C
L-W
L
G-B
BR-Y
Y-R
Y-R
Y-L
R-W
Y
L-Y
I10
I9
G-W
G
B
R-L
W-L
GR-R
LG-R
LG-B
2
3
1
9 A
10 A
1 A
2 A
15 B
14 B
FRESH
RECIRC
M
A22
AIR INLET CONTROL
SERVO MOTOR
G
13 A
FROM " TAIL" FUSE
W-G
3 A
TO RHEOSTAT
OFF
LO
M1
M2
BLOWER SW
H10 A, H11 B
HEATER CONTROL SW AND A/C SW

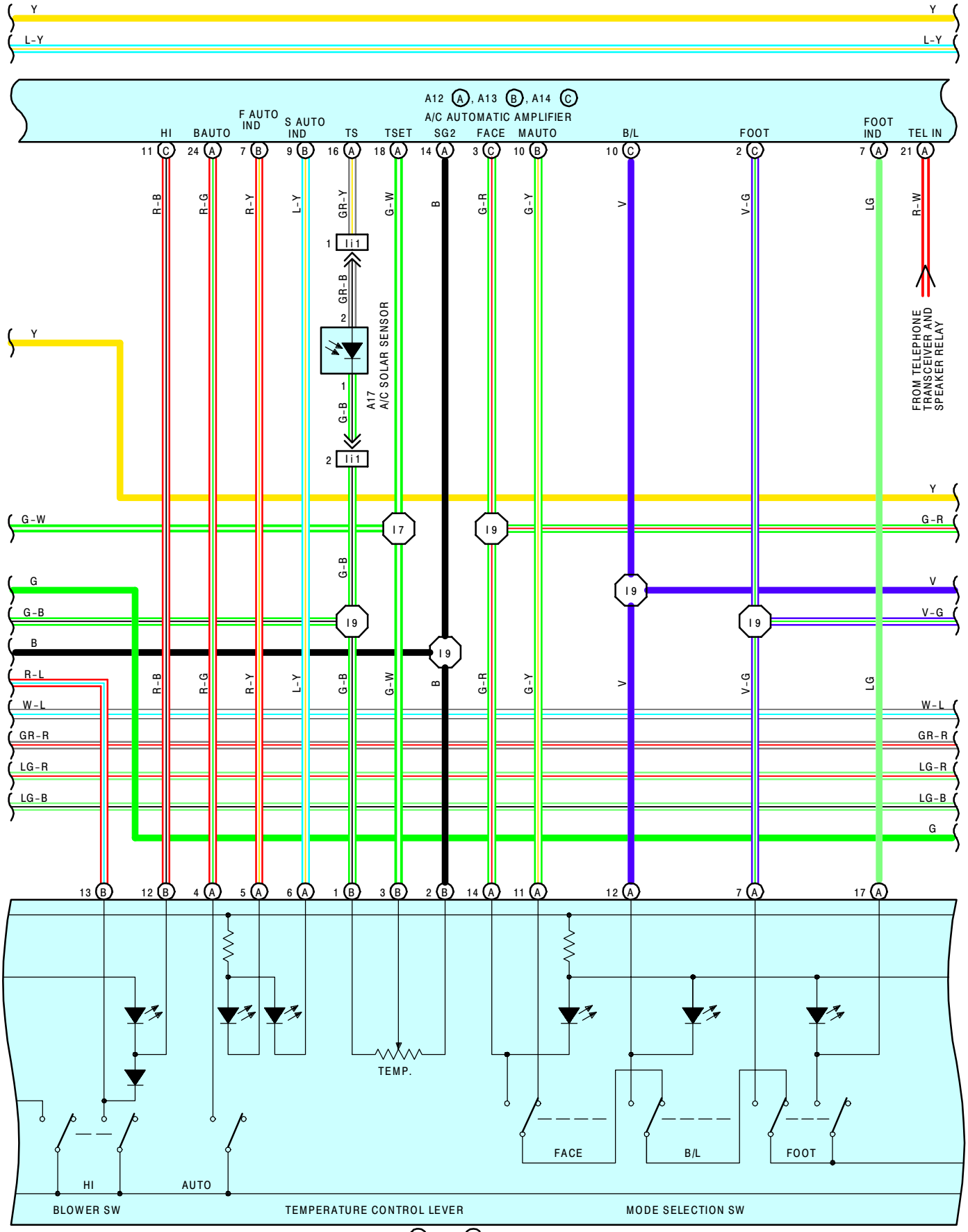

H10 A, H11 B
HEATER CONTROL SW AND A/C SW

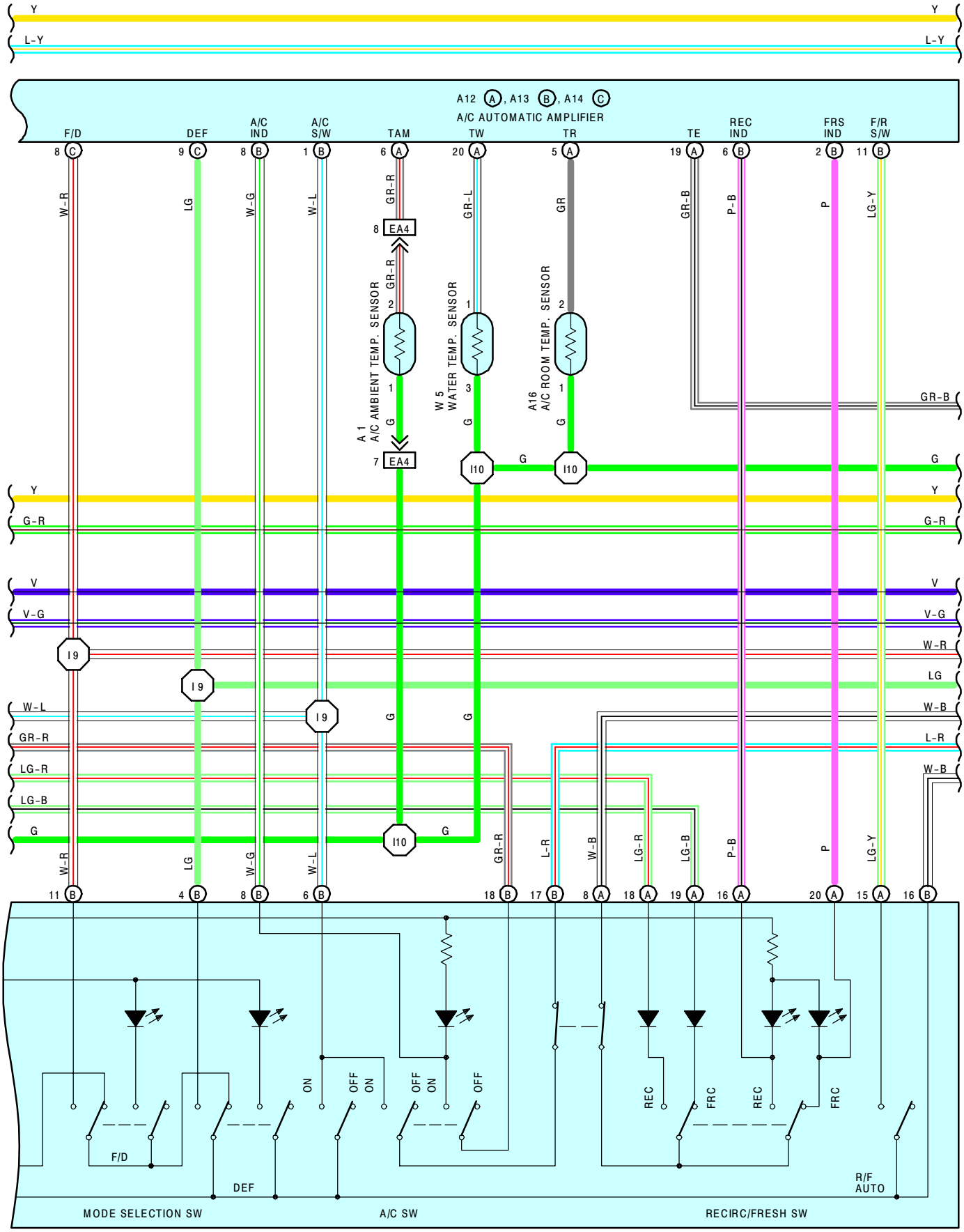

H10 A, H11 B
HEATER CONTROL SW AND A/C SW

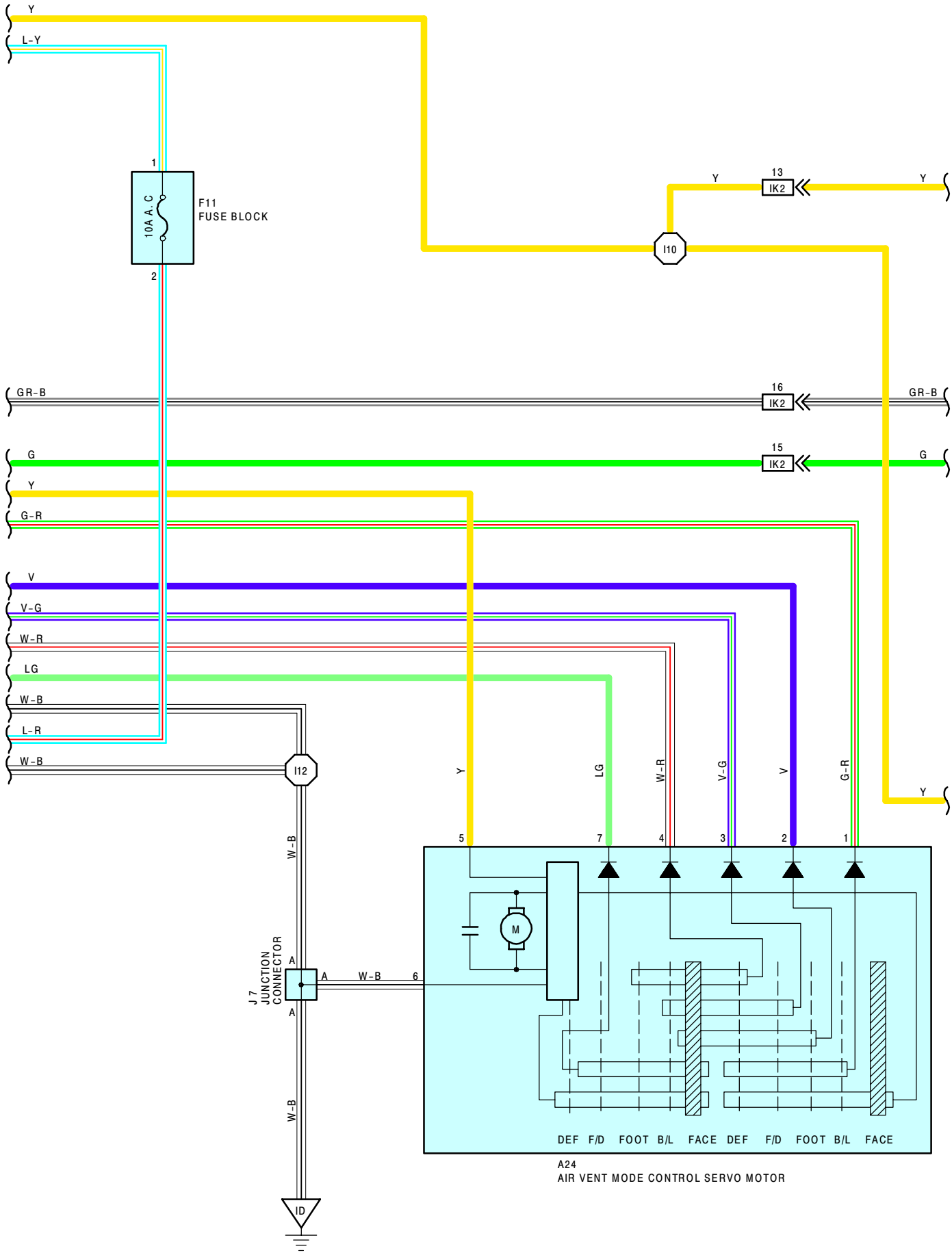
Y
L-Y
1
10A A.C
2
F11
FUSE BLOCK
Y
13
IK2
Y
I10
GR-B
16
IK2
GR-B
G
15
IK2
G
Y
G-R
V
V-G
W-R
LG
W-B
L-R
W-B
I12
Y
LG
W-R
V-G
V
G-R
Y
5
7
4
3
2
1
W-B
M
J7
JUNCTION
CONNECTOR
A
A
W-B
6
A
W-B
ID
DEF F/D FOOT B/L FACE DEF F/D FOOT B/L FACE
A24
AIR VENT MODE CONTROL SERVO MOTOR

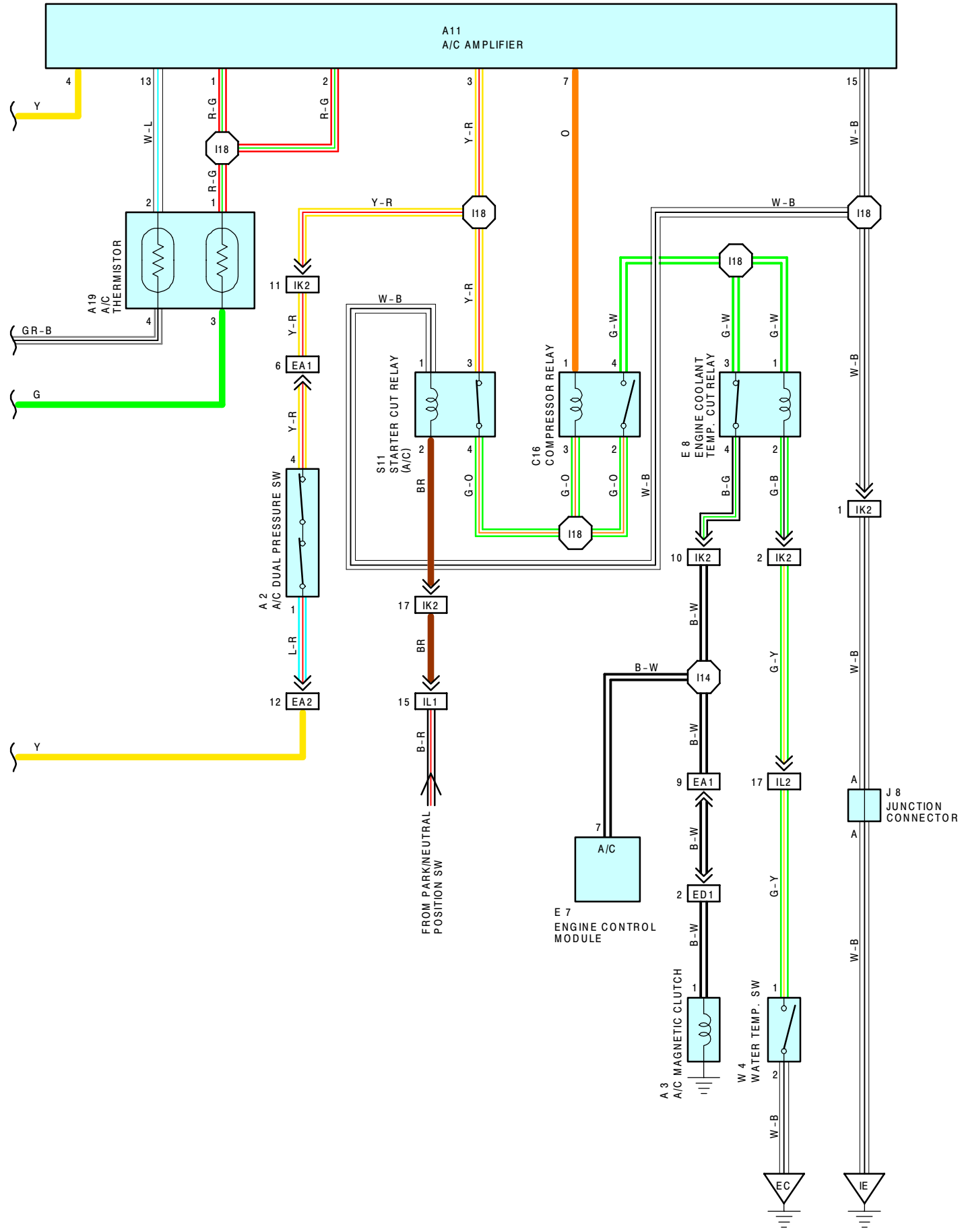
A11
A/C AMPLIFIER
A19
A/C
THERMISTOR
A 2
A/C DUAL PRESSURE SW
S11
STARTER CUT RELAY
(A/C)
C16
COMPRESSOR RELAY
E 8
ENGINE COOLANT
TEMP. CUT RELAY
FROM PARK/NEUTRAL
POSITION SW
E 7
ENGINE CONTROL
MODULE
A/C
A 3
A/C MAGNETIC CLUTCH
W 4
WATER TEMP. SW
J 8
JUNCTION
CONNECTOR
EC
IE
I18
IK2
EA1
EA2
IL1
I14
ED1
IL2
Y
GR-B
G
W-L
R-G
Y-R
O
W-B
G-W
G-O
BR
B-G
G-B
B-W
L-R
B-R
G-Y

SERVICE HINTS

A 2 A/C DUAL PRESSURE SW
1–4 : OPEN ABOVE APPROX. **2.0** KG/CM^2 (**28.4** PSI, **196** KPA) OR **32** KG/CM^2 (**455** PSI, **3138** KPA)

A 3 A/C MAGNETIC CLUTCH
1–GROUND : APPROX. **3.7** Ω

A12 (A), A13 (B), A14 (C) A/C AUTOMATIC AMPLIFIER

+B	–GROUND	: ALWAYS. APPROX. **12** VOLTS
IG	–GROUND	: APPROX. **12** VOLTS WITH THE IGNITION SW AT **ON** POSITION
HR	–GROUND	: APPROX. **12** VOLTS WITH THE IGNITION SW AT **ON** POSITION AND DO NOT TURN THE BLOWER MOTOR BELOW **1** VOLT WITH THE IGNITION SW AT **ON** POSITION AND TURN THE BLOWER MOTOR
ACC	–GROUND	: APPROX. **12** VOLTS WITH THE IGNITION SW AT **ACC** OR **ON** POSITION
BLW	–GROUND	: BELOW **1.5** VOLTS WITH THE IGNITION SW ON AND TURN THE BLOWER MOTOR
S5	–GROUND	: **4–6** VOLTS WITH THE IGNITION SW ON
SG1	–GROUND	: ALWAYS CONTINUITY
AMH	–AMC	: **1.3–1.9** VOLTS WITH THE IGNITION SW OFF
FRS	–GROUND	: APPROX. **12** VOLTS WITH THE FRESH SW ON
REC	–GROUND	: APPROX. **12** VOLTS WITH THE RECIRC SW ON
FACE	–GROUND	: APPROX. **12** VOLTS WITH THE FACE SW ON
DEF	–GROUND	: APPROX. **12** VOLTS WITH THE DEF SW ON
GND	–GROUND	: ALWAYS CONTINUITY

A15 A/C POWER TRANSISTOR (BLOWER CONTROL)
1–3 : APPROX. **2.0–2.4** KΩ

: PARTS LOCATION

CODE		SEE PAGE	CODE		SEE PAGE	CODE	SEE PAGE
A 1		22	**A22**		24	**J 1**	25
A 2		22	**A23**		24	**J 2**	25
A 3		22	**A24**		24	**J 3**	25
A11		24	**B 2**		24	**J 4**	25
A12	A	24	**B 3**		24	**J 7**	25
A13	B	24	**B 4**		24	**J 8**	25
A14	C	24	**C16**		24	**S 4**	25
A15		24	**E 7**		24	**S 5**	25
A16		24	**E 8**		24	**S11**	25
A17		24	**F11**		25	**W 4**	23
A18		24	**H10**	A	25	**W 5**	25
A19		24	**H11**	B	25		

: RELAY BLOCKS

CODE	SEE PAGE	RELAY BLOCKS (RELAY BLOCK LOCATION)
1	20	R/B NO. 1 (LEFT KICK PANEL)

: CONNECTOR JOINING WIRE HARNESS AND WIRE HARNESS

CODE	SEE PAGE	JOINING WIRE HARNESS AND WIRE HARNESS (CONNECTOR LOCATION)
EA1	30	COWL WIRE AND ENGINE ROOM MAIN WIRE (LEFT FENDER)
EA2		
EA4	30	COWL WIRE AND ENGINE ROOM MAIN WIRE (RIGHT FENDER)
ED1	30	OIL PRESSURE SWITCH WIRE AND ENGINE ROOM MAIN WIRE (NEAR THE AIR CLEANER)
IK1	34	COWL WIRE AND A/C SUB WIRE (BEHIND GLOVE BOX)
IK2		
IL1	34	ENGINE WIRE AND COWL WIRE (BEHIND GLOVE BOX)
IL2		
II1	32	COWL WIRE AND SECURITY WIRE (LEFT KICK PANEL)
	34	SOLAR SENSOR SUB WIRE AND COWL WIRE (BEHIND GLOVE BOX)

: GROUND POINTS

CODE	SEE PAGE	GROUND POINTS LOCATION
EC	30	AIR INTAKE CHAMBER
ID	32	LEFT KICK PANEL
IE	32	RIGHT KICK PANEL

: SPLICE POINTS

CODE	SEE PAGE	WIRE HARNESS WITH SPLICE POINTS	CODE	SEE PAGE	WIRE HARNESS WITH SPLICE POINTS
I 3	34	COWL WIRE	**I12**	34	COWL WIRE
I 4			**I13**		
I 7			**I14**		
I 9			**I15**		
I10			**I18**	34	A/C SUB WIRE

A 1 BLACK

A 2 BLACK

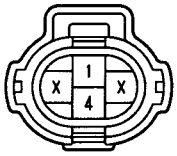

A 3 GRAY

A11

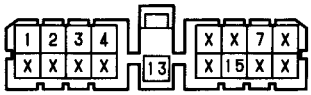

A12 Ⓐ

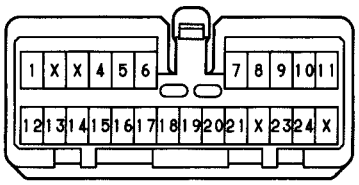

A13 Ⓑ

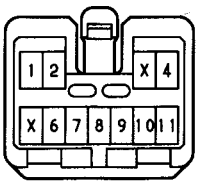

A14 Ⓒ

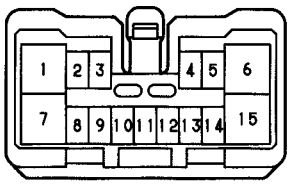

A15

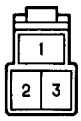

A16

A17

A18

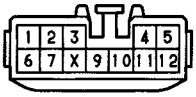

A19

A22

A23

A24

B 2

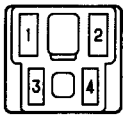

B 3

B 4 BLACK

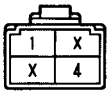

C16

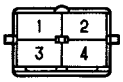

E 7 DARK GRAY

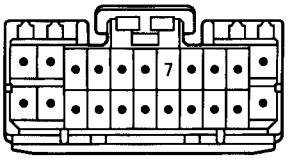

E 8

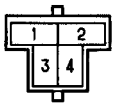

F11

(SEE PAGE 20)

H10 Ⓐ

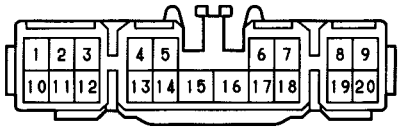

H11 Ⓑ BLUE

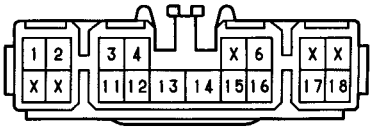

J 1

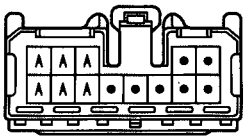

(HINT:SEE PAGE 7)

J 2 BLUE

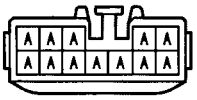

(HINT:SEE PAGE 7)

J 3

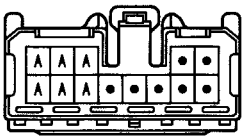

J 4

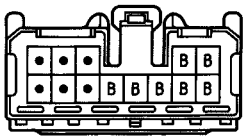

(HINT:SEE PAGE 7)

J 7 BLUE

(HINT:SEE PAGE 7)

J 8 BLUE

(HINT:SEE PAGE 7)

S 4

S 5

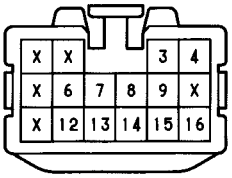

S11

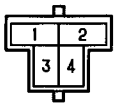

W 4 GRAY

W 5

J GROUND POINT

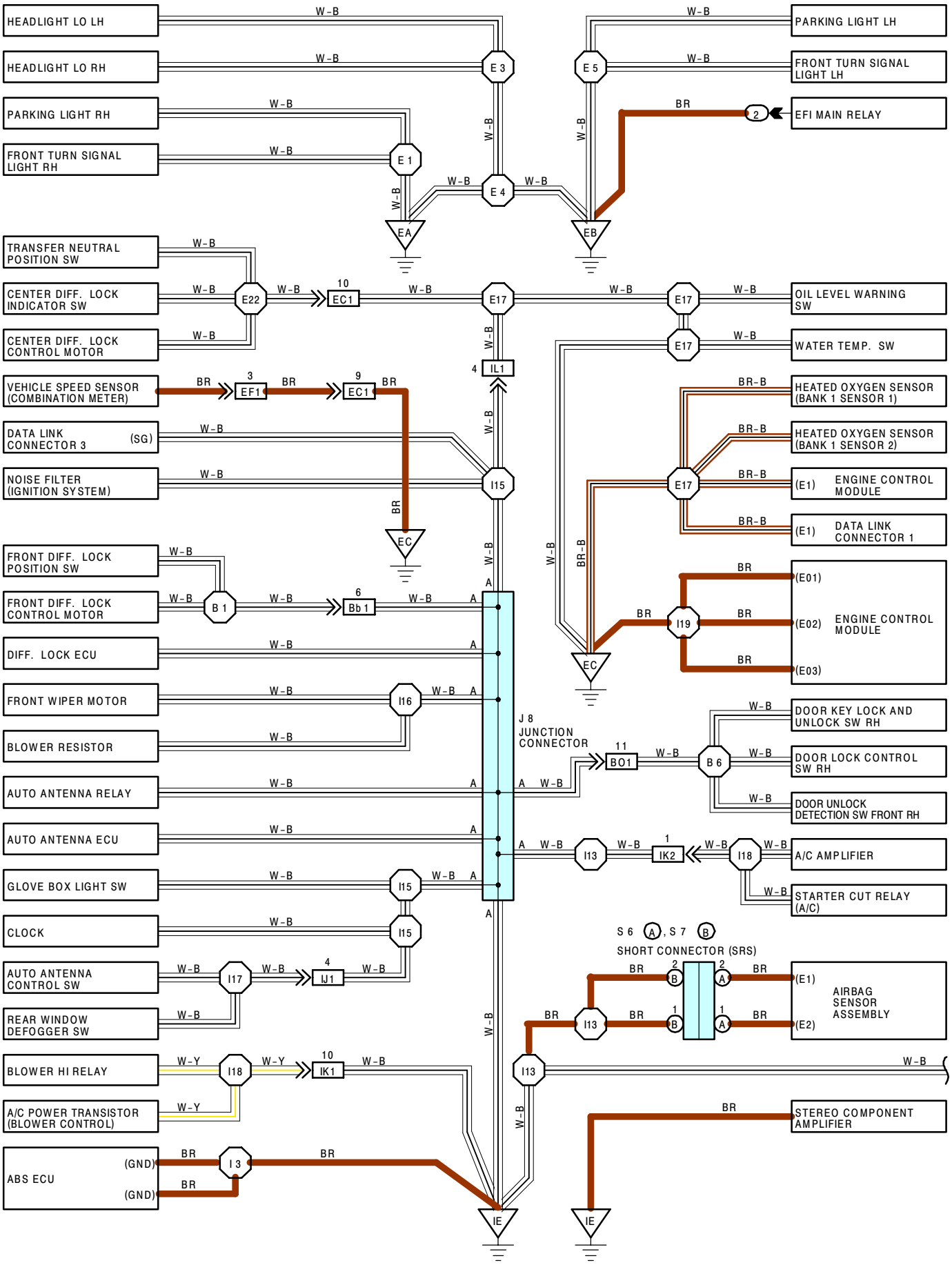

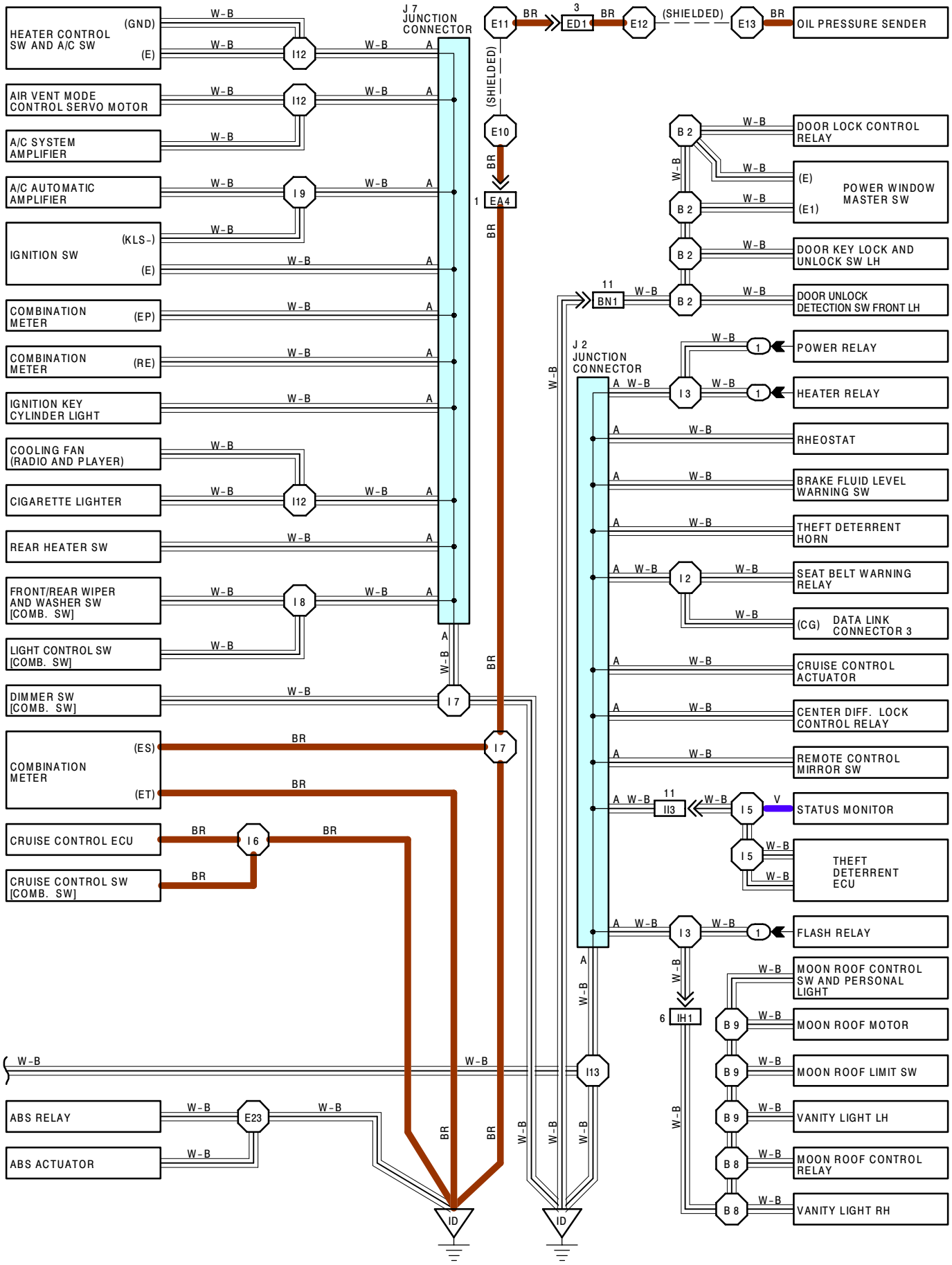
HEATER CONTROL SW AND A/C SW
(GND)
(E)
AIR VENT MODE CONTROL SERVO MOTOR
A/C SYSTEM AMPLIFIER
A/C AUTOMATIC AMPLIFIER
IGNITION SW
(KLS-)
(E)
COMBINATION METER
(EP)
COMBINATION METER
(RE)
IGNITION KEY CYLINDER LIGHT
COOLING FAN (RADIO AND PLAYER)
CIGARETTE LIGHTER
REAR HEATER SW
FRONT/REAR WIPER AND WASHER SW [COMB. SW]
LIGHT CONTROL SW [COMB. SW]
DIMMER SW [COMB. SW]
COMBINATION METER
(ES)
(ET)
CRUISE CONTROL ECU
CRUISE CONTROL SW [COMB. SW]
ABS RELAY
ABS ACTUATOR
J 7 JUNCTION CONNECTOR
J 2 JUNCTION CONNECTOR
OIL PRESSURE SENDER
(SHIELDED)
DOOR LOCK CONTROL RELAY
POWER WINDOW MASTER SW
DOOR KEY LOCK AND UNLOCK SW LH
DOOR UNLOCK DETECTION SW FRONT LH
POWER RELAY
HEATER RELAY
RHEOSTAT
BRAKE FLUID LEVEL WARNING SW
THEFT DETERRENT HORN
SEAT BELT WARNING RELAY
DATA LINK CONNECTOR 3
CRUISE CONTROL ACTUATOR
CENTER DIFF. LOCK CONTROL RELAY
REMOTE CONTROL MIRROR SW
STATUS MONITOR
THEFT DETERRENT ECU
FLASH RELAY
MOON ROOF CONTROL SW AND PERSONAL LIGHT
MOON ROOF MOTOR
MOON ROOF LIMIT SW
VANITY LIGHT LH
MOON ROOF CONTROL RELAY
VANITY LIGHT RH

J GROUND POINT

BACK DOOR LOCK DETECTION SW
HIGH MOUNTED STOP LIGHT
REAR WINDOW DEFOGGER (-)
REAR WIPER MOTOR
BACK DOOR COURTESY SW
BACK DOOR LOCK DETECTION SW
TELEPHONE TRANSCEIVER AND SPEAKER RELAY
FUEL PUMP
ABS DECELERATION SENSOR
MOBILEPHONE
FUEL SENDER
SHIFT LOCK ECU (E)
POWER SEAT CONTROL SW (DRIVER' S SEAT)
BUCKLE SW LH
POWER SEAT CONTROL SW (FRONT PASSENGER'S SEAT)
(-S)
REAR HEATER RELAY
(E)
O/D MAIN SW
REAR DIFF. LOCK POSITION SW
REAR DIFF. LOCK CONTROL MOTOR
REAR COMBINATION LIGHT LH
LICENSE PLATE LIGHT
REAR COMBINATION LIGHT RH

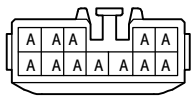

(HINT: SEE PAGE 7)

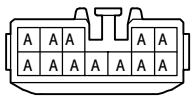

(HINT: SEE PAGE 7)

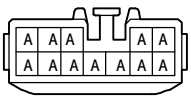

(HINT: SEE PAGE 7)

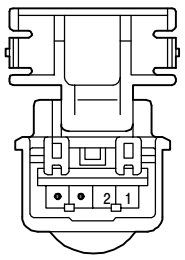

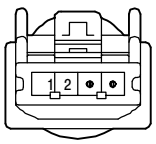

: PARTS LOCATION

CODE	SEE PAGE	CODE		SEE PAGE	CODE		SEE PAGE
J 2	25	**J 8**		25	**S 7**	B	25
J 7	25	**S 6**	A	25			

: RELAY BLOCKS

CODE	SEE PAGE	RELAY BLOCKS (RELAY BLOCK LOCATION)
1	20	R/B NO. 1 (LEFT KICK PANEL)
2	18	R/B NO. 2 (FRONT SIDE OF LEFT FENDER)

: CONNECTOR JOINING WIRE HARNESS AND WIRE HARNESS

CODE	SEE PAGE	JOINING WIRE HARNESS AND WIRE HARNESS (CONNECTOR LOCATION)
EA4	30	COWL WIRE AND ENGINE ROOM MAIN WIRE (RIGHT FENDER)
EC1	30	ENGINE WIRE AND TRANSMISSION WIRE (NEAR THE STARTER)
ED1	30	OIL PRESSURE SWITCH WIRE AND ENGINE ROOM MAIN WIRE (NEAR THE AIR CLEANER)
EF1	30	TRANSMISSION WIRE AND SPEED SENSOR WIRE (NEAR THE TRANSMISSION)
IH1	32	ROOF WIRE AND COWL WIRE (LEFT KICK PANEL)
I13	32	COWL WIRE AND SECURITY WIRE (LEFT KICK PANEL)
IJ1	34	COWL WIRE AND INSTRUMENT PANEL WIRE (INSTRUMENT PANEL CENTER)
IK1	34	COWL WIRE AND A/C SUB WIRE (BEHIND GLOVE BOX)
IK2		
IL1	34	ENGINE WIRE AND COWL WIRE (BEHIND GLOVE BOX)
BN1	36	FRONT DOOR LH WIRE AND COWL WIRE (LEFT KICK PANEL)
BO1	36	FRONT DOOR RH WIRE AND COWL WIRE (RIGHT KICK PANEL)
BQ1	36	FLOOR NO. 2 WIRE AND FLOOR WIRE (UNDER THE CENTER CONSOLE)
BS1	36	FLOOR WIRE AND LUGGAGE ROOM NO. 2 WIRE (BESIDE THE FUEL TANK)
BU1	36	FLOOR NO. 3 WIRE AND FLOOR WIRE (LEFT QUARTER PANEL INNER)
BV1	36	LUGGAGE ROOM NO. 1 WIRE AND FLOOR WIRE (LEFT QUARTER PANEL INNER)
BW2	36	BACK DOOR NO. 1 WIRE AND LUGGAGE ROOM NO. 1 WIRE (LEFT REAR SIDE OF ROOF)
BX2	38	BACK DOOR NO. 1 WIRE AND BACK DOOR NO. 2 WIRE (BACK DOOR LEFT)
BZ1	38	LUGGAGE ROOM NO. 3 WIRE AND FLOOR NO. 3 WIRE (UNDER THE LOWER BACK PANEL)
Ba1	38	REAR WINDOW NO. 1 WIRE AND BACK DOOR NO. 2 WIRE (BACK DOOR RIGHT)
Bb1	38	COWL WIRE AND FRAME WIRE (RIGHT FENDER)
Bf2	38	FLOOR NO. 3 WIRE AND FRAME NO. 2 WIRE (LEFT QUARTER PANEL INNER)
Bg1	40	FLOOR NO. 1 WIRE AND SEAT NO. 1 LH WIRE (UNDER THE DRIVER'S SEAT)
Bh1	40	FLOOR NO. 2 WIRE AND SEAT NO. 1 RH WIRE (UNDER THE PASSENGER'S SEAT)

: GROUND POINTS

CODE	SEE PAGE	GROUND POINTS LOCATION
EA	30	FRONT SIDE OF RIGHT FENDER
EB	30	FRONT SIDE OF LEFT FENDER
EC	30	AIR INTAKE CHAMBER
ID	32	LEFT KICK PANEL
IE	32	RIGHT KICK PANEL
BF	36	UNDER THE CENTER CONSOLE BOX
BG	36	LOWER BACK PANEL CENTER

: SPLICE POINTS

CODE	SEE PAGE	WIRE HARNESS WITH SPLICE POINTS	CODE	SEE PAGE	WIRE HARNESS WITH SPLICE POINTS
E 1	30	ENGINE ROOM MAIN WIRE	**I13**	34	COWL WIRE
E 3			**I15**		
E 4			**I16**		
E 5			**I17**	34	INSTRUMENT PANEL WIRE
E10			**I18**	34	A/C SUB WIRE
E11			**I19**	34	ENGINE WIRE
E12	30	OIL PRESSURE SWITCH WIRE	**B 1**	38	FRAME WIRE
E13			**B 2**	38	FRONT DOOR LH WIRE
E17	30	ENGINE WIRE	**B 6**	38	FRONT DOOR RH WIRE
E22	30	TRANSMISSION WIRE	**B 8**	38	ROOF WIRE
E23	30	COWL WIRE	**B 9**		
I 2	34		**B12**	38	FLOOR WIRE
I 3			**B14**		
I 5	34	SECURITY WIRE	**B15**		
I 6	34	COWL WIRE	**B17**	38	FLOOR NO. 2 WIRE
I 7			**B24**	38	BACK DOOR NO. 1 WIRE
I 8			**B25**	38	BACK DOOR NO. 2 WIRE
I 9			**B28**	38	FLOOR NO. 3 WIRE
I12			**B32**	40	SEAT NO. 1 LH WIRE

H POWER SOURCE (Current Flow Chart)

The chart below shows the route by which current flows from the battery to each electrical source (Fusible Link, Circuit Breaker, Fuse, etc.) and other parts.
The next page and following pages show the parts to which each electrical source outputs current.

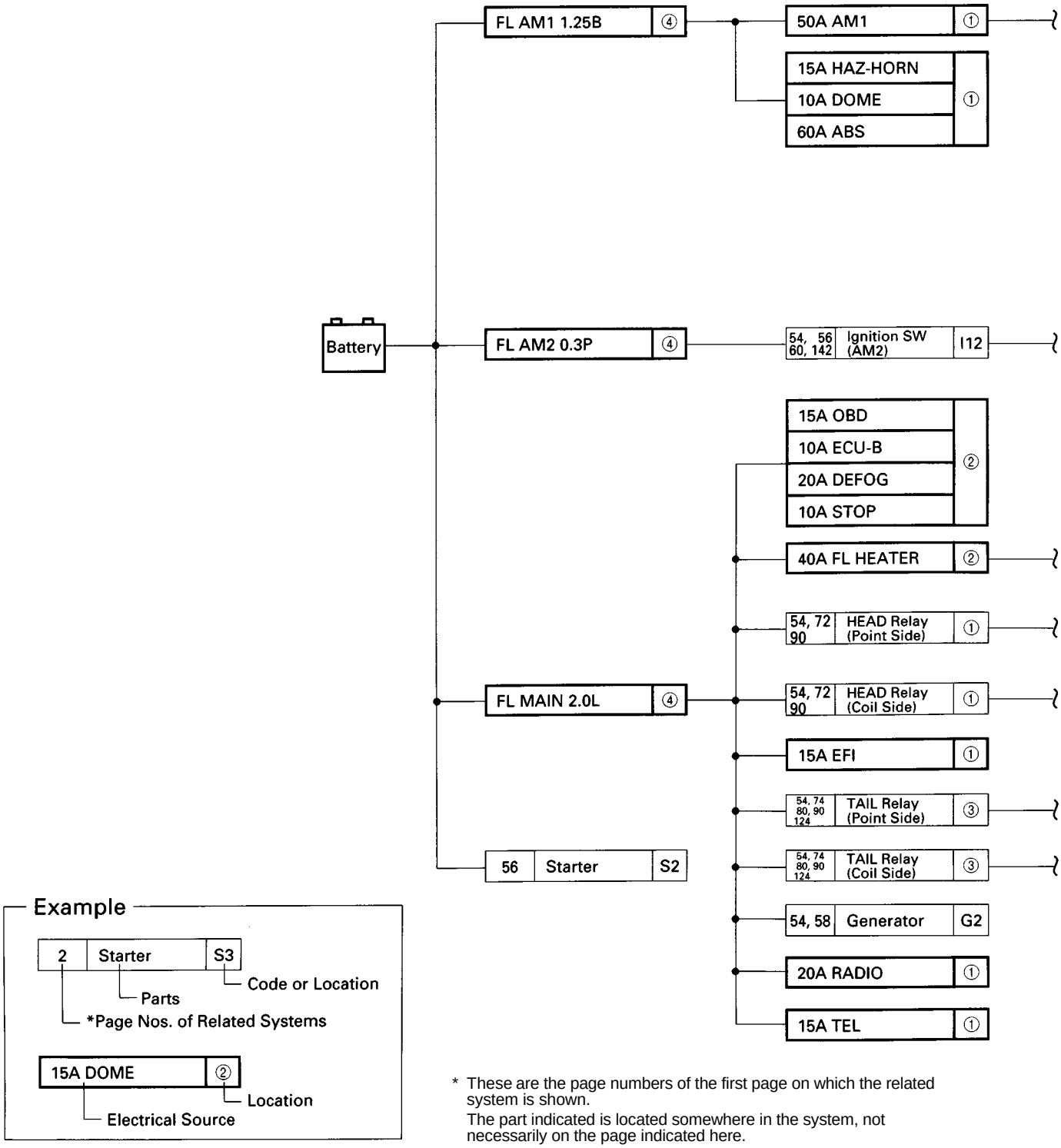

* These are the page numbers of the first page on which the related system is shown.
The part indicated is located somewhere in the system, not necessarily on the page indicated here.

[LOCATION] ① : R/B No. 2 (See page 18) ② : Fuse Block (F11 See page 20)

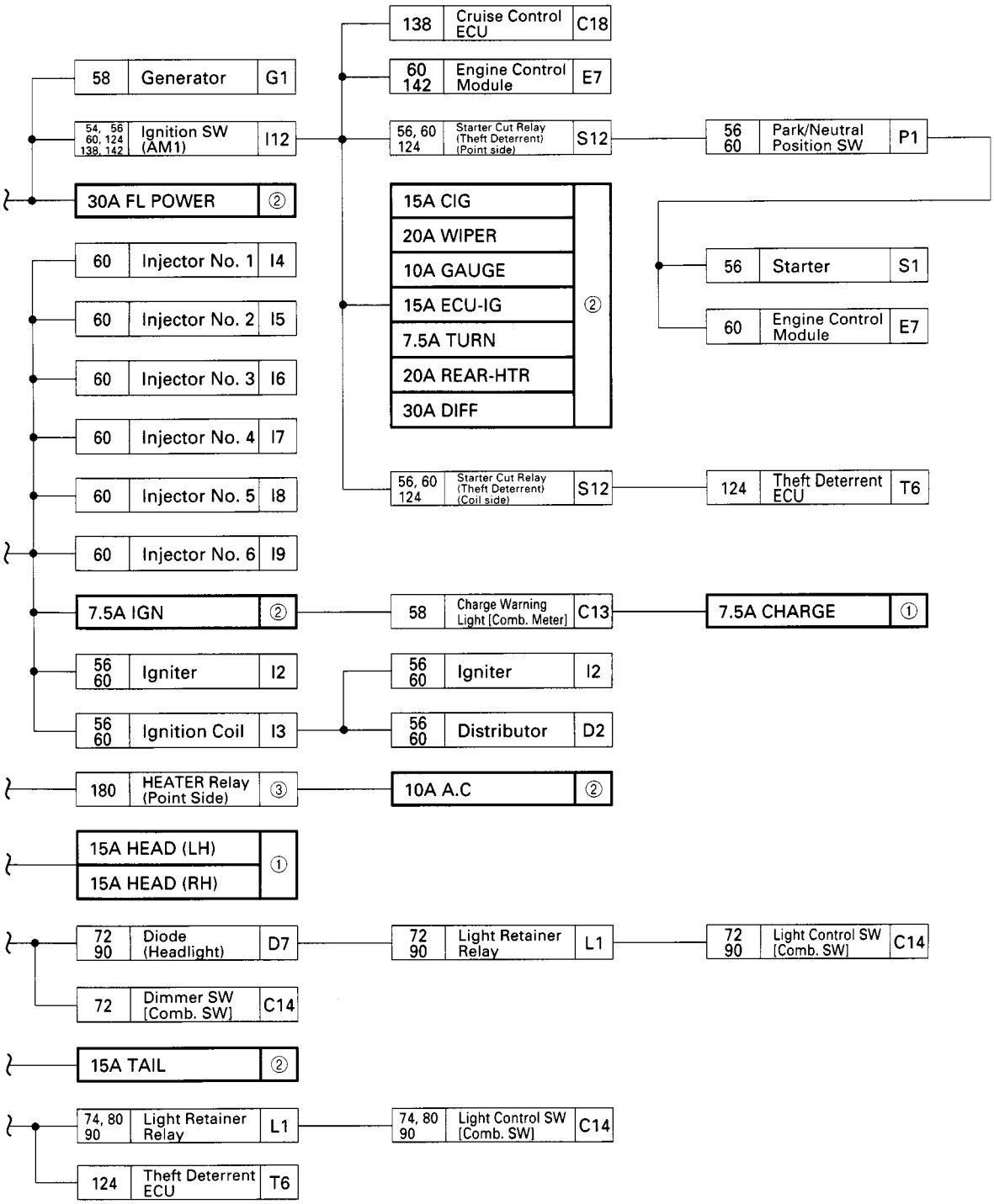

③ : R/B No. 1 (See page 20)

④ : Fusible Link (F6, F7, F8 See page 22)

H POWER SOURCE (Current Flow Chart)

Location	CB or Fuse		A/C Dual Pressure SW	ABS Actuator	ABS Relay		Auto Antenna Relay	Auto Antenna Motor	A/C Amplifier	A/C Automatic Amplifier		A/C Power Transistor (Blower Control)	A/C System Amplifier	ABS ECU		Air Inlet Control Servo Motor	Air Vent Mode Control Servo Motor	Airbag Sensor Assembly	Ashtray Illumination	Auto Antenna Control SW	Auto Antenna ECU	ABS Deceleration Sensor	Brake Fluid Level Warning SW
		*Page Nos. of Related Systems	180	133			128		180				133			180		155	80	80 128	128 168	133	174
			A 2	A 5	A 7	A 8	A 9	A10	A11	A12	A14	A15	A18	A20	A21	A22	A24	A25	A28	A29	A30	A31	B 1
①	7.5A	CHARGE																					
①	10A	DOME																					
①	15A	EFI																					
①	15A	TEL																					
①	15A	HEAD (LH)																					
①	15A	HEAD (RH)																					
①	15A	HAZ-HORN																					
①	20A	RADIO																		●	●		
①	60A	ABS		●	●	●									●								
②	15A	CIG								●								●			●		
②	15A	TAIL																	●	●			
②	10A	STOP												●									
②	20A	DEFOG																					
②	20A	WIPER																					
②	10A	GAUGE	●	●		●			●	●	●		●	●	●	●	●						●
②	7.5A	TURN																					
②	15A	ECU-IG					●	●							●							●	
②	20A	REAR-HTR																					
②	7.5A	IGN																●					
②	10A	A.C																					
②	30A	DIFF																					
②	30A	FL POWER																					
②	40A	FL HEATER									●	●											
②	10A	ECU-B								●					●								
②	15A	OBD																					

* These are the page numbers of the first page on which the related system is shown.
The part indicated is located somewhere in the system, not necessarily on the page indicated here.

[LOCATION] ① : R/B No. 2 (See page 18) ② : Fuse Block (F11 See page 20) ③ : R/B No. 1 (See page 20)

	Blower Hi Relay	Blower Motor (A/C)	Blower Resistor	Back Door Courtesy SW	Back Door Lock Motor	Buckle SW LH	Center Diff. Lock Control Motor	Center Diff. Lock Indicator SW	Center Diff. Lock Control Relay	Cigarette Lighter	Cigarette Lighter Illumination	Circuit Opening Relay	Clock	Combination Meter	Cruise Control Indicator Light [Comb. Meter]	Malfunction Indicator Lamp [Comb. Meter]	Seat Belt Warning Light [Comb. Meter]	SRS Warning Light [Comb. Meter]	Turn Signal Indicator Light LH [Comb. Meter]	Turn Signal Indicator Light RH [Comb. Meter]	Combination Meter	High Beam Indicator Light [Comb. Meter]	Open Door Warning Light [Comb. Meter]	Dimmer SW [Comb. SW]	Horn SW [Comb. SW]	Turn Signal SW [Comb. SW]	Front Wiper and Washer SW [Comb. SW]	Rear Wiper and Washer SW [Comb. SW]
	180			84	118	152	162	162 164	162	104	80	60	104	133 162 164 174	138	60	152	155	88		80 142 174	80 142 162 174	72	84	72	99	88	93	96
	B 2	B 3	B 4	B 5	B 6	B 7	C 1	C 2	C 5	C 6	C 7	C 8	C 9	C10					C11		C12	C13			C14			C15	
				●									●									●		●					
												●																	
																						●	●		●				
																			●	●						●	●		
										●			●																
											●		●								●	●							
																												●	●
	●					●	●	●	●					●	●	●	●				●	●							
																					●								
												●										●							
							●		●																				
					●																								
	●	●	●																										
														●				●											

H POWER SOURCE (Current Flow Chart)

Location	CB or Fuse		Cooling Fan (Radio and Player)	Cruise Control ECU	CD Automatic Changer	Data Link Connector 1	Data Link Connector 3	Diff. Lock Control SW	Diff. Lock ECU	Diode (Front Washer)	Diode (Interior Light)		Diode (Neutral Detection)	Diode (Rear Washer)	Door Courtesy Light Front LH	Door Courtesy Light Front RH	Door Courtesy Light Rear LH	Door Courtesy Light Rear RH	Door Courtesy SW Front LH	Door Courtesy SW Front RH	Door Courtesy SW Rear LH	Door Courtesy SW Rear RH	Door Lock Control Relay
		*Page Nos. of Related Systems	168	138	168	60 133 155	60	164		93	84		162	96	84								100 114 118
		Code or Location	C17	C18	C19	D 1	D 3	D 4	D 5	D 6	D 8	D 9	D10	D11	D12	D13	D14	D15	D16	D17	D18	D19	D20	D23
①	7.5A	CHARGE																						
	10A	DOME									●	●	●			●	●	●	●	●	●	●	●	
	15A	EFI				●																		
	15A	TEL																						
	15A	HEAD (LH)																						
	15A	HEAD (RH)																						
	15A	HAZ-HORN																						
	20A	RADIO			●																			
	60A	ABS																						
②	15A	CIG			●																			
	15A	TAIL																						
	10A	STOP		●																				
	20A	DEFOG																						
	20A	WIPER								●				●										
	10A	GAUGE	●	●		●			●					●										●
	7.5A	TURN																						
	15A	ECU-IG		●																				
	20A	REAR-HTR																						
	7.5A	IGN																						
	10A	A.C																						
	30A	DIFF						●	●															
	30A	FL POWER																						●
	40A	FL HEATER																						
	10A	ECU-B		●		●																		
	15A	OBD					●																	

* These are the page numbers of the first page on which the related system is shown.
The part indicated is located somewhere in the system, not necessarily on the page indicated here.

[LOCATION] ① : R/B No. 2 (See page 18) ② : Fuse Block (F11 See page 20) ③ : R/B No. 1 (See page 20)

	118			60 142	60	60 142 162 174	80 142	88		93	60		164	84		60 174	58	80		72				60	
Door Lock Motor and Door Unlock Detection SW Front LH	Door Lock Motor and Door Unlock Detection SW Front RH	Door Lock Motor Rear LH	Door Lock Motor Rear RH	Engine Control Module			Electronically Controlled Transmission Pattern Select SW	Front Turn Signal Light LH	Front Turn Signal Light RH	Front Wiper Motor	Fuel Pump Relay	Fuel Pump Resistor	Front Diff. Lock Position SW	Front Interior Light (w/ Moon Roof)	Front Interior Light (w/o Moon Roof)	Fuel Sender and Pump	Generator	Glove Box Light	Glove Box Light SW	Headlight Hi LH	Headlight Hi RH	Headlight Lo LH	Headlight Lo RH	Heated Oxygen Sensor (Bank 1 Sensor 1)	Heated Oxygen Sensor (Bank 1 Sensor 2)
D25	D26	D27	D28	E 4	E 5	E 7	E 9	F 1	F 2	F 3	F 4	F 5	F13	F16	F17	F18	G 1	G 4	G 5	H 1	H 2	H 3	H 4	H 5	H 6
														●	●										
				●	●	●					●	●				●								●	●
																				●		●			
																					●		●		
								●	●																
							●											●	●						
						●																			
										●															
				●		●	●						●			●									
						●	●																		
				●		●											●								
●	●	●	●																						

H POWER SOURCE (Current Flow Chart)

Location	CB or Fuse		Horn LH	Horn RH	Hazard SW	Heater Control SW and A/C SW		High Mounted Stop Light	Idle Air Control Valve	Ignition key Cylinder Light	Ignition key Cylinder Light Relay	Light Retainer Relay	License Plate Light	Mass Air Flow Meter	MobilePhone	Moon Roof Control Relay	Moon Roof Control SW and Personal Light	Moon Roof Limit SW and Motor	Oil Level Warning SW	Oil Pressure Sender	O/D Main SW	Park/Neutral Position SW, Back-Up Light SW and A/T Indicator SW
		*Page Nos. of Related Systems	99		80 88	80 180	180	76	60	84		90	74	60	106	100	84	100	174		80 142	78 142 162
		CB or Fuse	H 7	H 8	H 9	H10	H11	H12	I 1	I10	I11	L 1	L 2	M 1	M 3	M 4	M 5	M 6	O 1	O 2	O 4	P 1
①	7.5A	CHARGE																				
	10A	DOME								●	●						●					
	15A	EFI							●					●								
	15A	TEL																				
	15A	HEAD (LH)																				
	15A	HEAD (RH)																				
	15A	HAZ-HORN	●	●	●																	
	20A	RADIO																				
	60A	ABS																				
②	15A	CIG																				
	15A	TAIL			●	●							●								●	
	10A	STOP						●														
	20A	DEFOG																				
	20A	WIPER																				
	10A	GAUGE				●	●												●	●	●	●
	7.5A	TURN																				
	15A	ECU-IG										●			●							
	20A	REAR-HTR																				
	7.5A	IGN																				
	10A	A.C					●															
	30A	DIFF																				
	30A	FL POWER														●		●				
	40A	FL HEATER																				
	10A	ECU-B										●										
	15A	OBD																				

* These are the page numbers of the first page on which the related system is shown.
The part indicated is located somewhere in the system, not necessarily on the page indicated here.

[LOCATION] ① : R/B No. 2 (See page 18) ② : Fuse Block (F11 See page 20) ③ : R/B No. 1 (See page 20)

74		174	114										130									80 128	80 172	80 150	110	80 174	78	76
Parking Light LH	Parking Light RH	Parking Brake SW	Power Window Master SW	Power Window Motor Front LH	Power Window Motor Front RH	Power Window Motor Rear LH	Power Window Motor Rear RH	Power Window SW Front RH	Power Window SW Rear LH	Power Window SW Rear RH	Power Seat Control SW (Driver's Seat)	Power Seat Control SW (Front Passenger 's Seat)	Power Seat Motor (Driver's Seat Front Vertical Control)	Power Seat Motor (Driver's Seat Lumbar Support Control)	Power Seat Motor (Driver's Seat Rear Vertical Control)	Power Seat Motor (Driver's Seat Reclining Control)	Power Seat Motor (Driver's Seat Slide Control)	Power Seat Motor (Front Passenger's Seat Front Vertical Control)	Power Seat Motor (Front Passenger's Seat Rear Vertical Control)	Power Seat Motor (Front Passenger's Seat Reclining Control)	Power Seat Motor (Front Passenger's Seat Slide Control)	Radio and Player	Rear Heater SW	Rear Window Defogger SW	Remote Control Mirror SW	Rheostat	Back-Up Light LH [Rear Comb. Light LH]	Stop Light LH [Rear Comb. Light LH]
P 2	P 3	P 4	P 5	P 6	P 7	P 8	P 9	P10	P11	P12	P13	P14	P15	P16	P17	P18	P19	P20	P21	P22	P23	R 1	R 3	R 4	R 5	R 6	R 7	

H POWER SOURCE (Current Flow Chart)

Location	CB or Fuse		Rear Turn Signal Light LH [Rear Comb. Light LH]	Taillight LH [Rear Comb. Light LH]	Back-Up light RH [Rear Comb. Light RH]	Stop Light RH [Rear Comb. Light RH]	Rear Turn Signal Light RH [Rear Comb. Light RH]	Taillight RH [Rear Comb. Light RH]	Rear Diff. Lock Position SW	Rear Heater	Rear Heater Relay	Rear Interior Light	Rear Window Defogger (+)	Rear Wiper Motor	Rear Wiper Relay	Remote Control Mirror LH	Remote Control Mirror RH	Seat Belt Warning Relay	Starter Cut Relay (A/C)	Stereo Component Amplifier	Stop Light SW	Shift Lock ECU	Transfer L4 Position SW	Transfer Neutral Position SW
		*Page Nos. of Related Systems	88	74	78	76	88	74	164	172		84	150	96		110		152	180	168	60 76 112 133 138 142	112	142 162	162
		CB or Fuse	R 7		R 8				R10	R13	R14	R15	R16	R18	R19	R20	R21	S 3	S11	S15	S18	S19	T 3	T 4
①	7.5A	CHARGE																						
	10A	DOME										●						●						
	15A	EFI																						
	15A	TEL																						
	15A	HEAD (LH)																						
	15A	HEAD (RH)																						
	15A	HAZ-HORN	●				●																	
	20A	RADIO																		●				
	60A	ABS																						
②	15A	CIG														●	●			●		●		
	15A	TAIL		●				●																
	10A	STOP				●															●	●		
	20A	DEFOG											●											
	20A	WIPER												●	●									
	10A	GAUGE			●				●									●	●				●	●
	7.5A	TURN																						
	15A	ECU-IG																			●	●		
	20A	REAR-HTR								●	●													
	7.5A	IGN																						
	10A	A.C																						
	30A	DIFF																						
	30A	FL POWER																						
	40A	FL HEATER																						
	10A	ECU-B																						
	15A	OBD																						

* These are the page numbers of the first page on which the related system is shown.
The part indicated is located somewhere in the system, not necessarily on the page indicated here.

[LOCATION] ① : R/B No. 2 (See page 18) ② : Fuse Block (F11 See page 20) ③ : R/B No. 1 (See page 20)

124	106	74 76 78	88	174	60		84		96	93 96	174	60 142	99 124	150		88	180		100 114 118	
Theft Deterrent ECU	Telephone Transceiver and Speaker Relay	Trailer Socket (Tail and Stop Light)	Trailer Socket (Turn Signal Light)	Vehicle Speed Sensor (Combination Meter)	VSV (EGR)	VSV (Fuel Pressure Control)	Vanity Light LH	Vanity Light RH	Washer Change Valve	Washer Motor	Water Temp. Sender	EFI MAIN Relay	HORN Relay	DEFOG Relay (Coil Side)	DEFOG Relay (Point Side)	FLASH Relay	HEATER Relay (Coil Side)	HEATER Relay (Point Side)	POWER Relay (Coil Side)	POWER Relay (Point Side)
T 6	T 9	T10	T11	V 1	V 3	V 4	V 5	V 6	W1	W2	W3	①		③						
							●	●												
					●	●						●								
	●																			
●			●										●			●				
		●																		
		●																		
															●					
									●	●										
		●		●							●			●			●		●	
●	●																			
																			●	●
																		●		

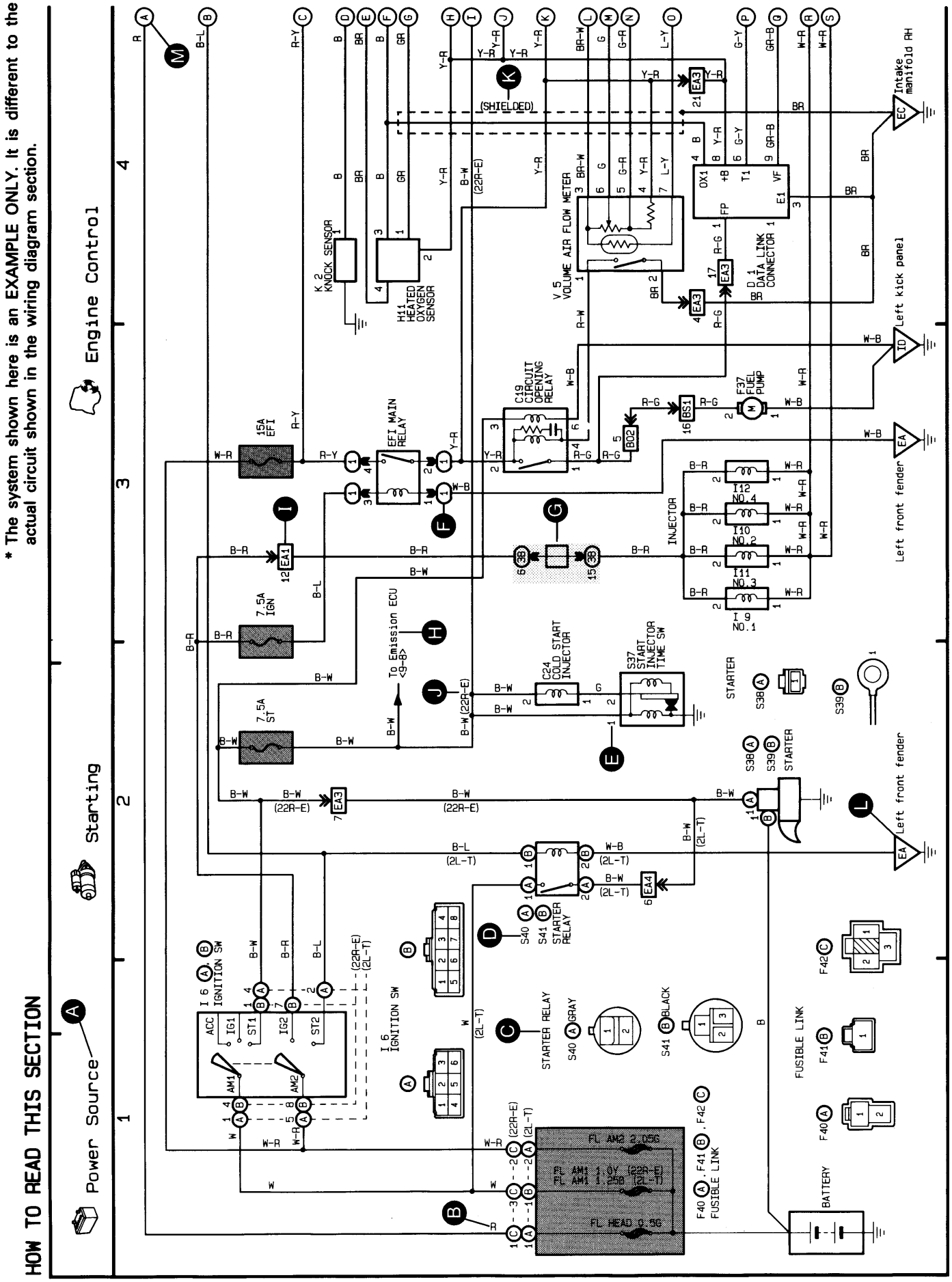
* The system shown here is an EXAMPLE ONLY. It is different to the actual circuit shown in the wiring diagram section.
HOW TO READ THIS SECTION
Power Source
Starting
Engine Control
1
2
3
4
A
M
K
(SHIELDED)
K 2 KNOCK SENSOR
H11 HEATED OXYGEN SENSOR
V 5 VOLUME AIR FLOW METER
D 1 DATA LINK CONNECTOR 1
Intake manifold RH
Left kick panel
Left front fender
15A EFI
EFI MAIN RELAY
C19 CIRCUIT OPENING RELAY
F37 FUEL PUMP
INJECTOR
I12 NO.4
I10 NO.2
I11 NO.3
I 9 NO.1
7.5A IGN
7.5A ST
To Emission ECU <9-8>
C24 COLD START INJECTOR
S37 START INJECTOR TIME SW
STARTER
S38
S39
STARTER RELAY
S40
S41
I 6 IGNITION SW
ACC
IG1
ST1
IG2
ST2
AM1
AM2
FL AM2 2.0SG
FL AM1 1.0Y (22R-E)
FL AM1 1.25B (2L-T)
FL HEAD 0.5G
F40 . F41 . F42
FUSIBLE LINK
BATTERY
F42
F41
F40
GRAY
BLACK

Ⓐ: System Title

Ⓑ: Indicates the wiring color.

Wire colors are indicated by an alphabetical code.

B	=	Black	L	=	Blue	R	=	Red
BR	=	Brown	LG	=	Light Green	V	=	Violet
G	=	Green	O	=	Orange	W	=	White
GR	=	Gray	P	=	Pink	Y	=	Yellow

The first letter indicates the basic wire color and the second letter indicates the color of the stripe.

Example: L – Y

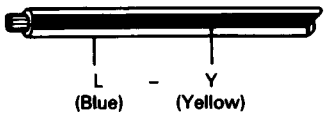

Ⓒ: Indicates the connector to be connected to a part (the numeral indicates the pin No.)

Ⓓ: The position of the parts is the same as shown in the wiring diagram and wire routing.

Ⓔ: Indicates the pin number of the connector. The numbering system is different for female and male connectors.

Example: Numbered in order from upper left to lower right — Numbered in order from upper right to lower left

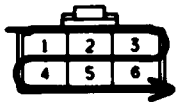

Female

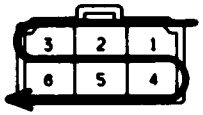

Male

The numbering system for the overall wiring diagram is the same as above.

Ⓕ: Indicates a Relay Block. No shading is used and only the Relay Block No. is shown to distinguish it from the J/B.

Example: ① Indicates Relay Block No. 1.

Ⓖ: Junction Block (The number in the circle is the J/B No. and the connector code is shown beside it). Junction Blocks are shaded to clearly separate them from other parts (different junction blocks are shaded differently for further clarification).

Example:

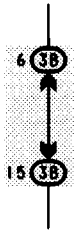

3B indicates that it is inside Junction Block No. 3.

Ⓗ: Indicates related system.

Ⓘ: Indicates the wiring harness and wiring harness connector. The wiring harness with male terminal is shown with arrows (⩔). Outside numerals are pin numbers.

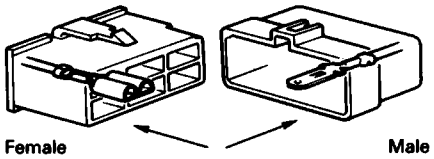

Female — Male (⩔)

Ⓙ: ( ) is used to indicate different wiring and connector, etc. when the vehicle model, engine type, or specification is different.

Ⓚ: Indicates a shielded cable.

Ⓛ: Indicates and located on ground point.

Ⓜ: The same code occuring on the next page indicates that the wire harness is continuous.

SYSTEM INDEX

1996 Model (Location No. 1 to 25)

SYSTEMS	LOCATION
ABS	10-2
Auto Antenna	21-2
Automatic Air Conditioning	25-2
Back-Up Light	9-8
Cellular Mobile Telephone	20-2
Center Differential Lock	22-2
Charging	1-4
Cigarette Lighter	17-3
Clock	17-4
Combination Meter	24-2
Cruise Control	11-2
Door Lock Control	15-2
Electronically Controlled Transmission and A/T Indicator	9-2
Engine Control	2-2
Front/Rear Differential Lock	23-2
Front Wiper and Washer	8-2
Headlight	3-4
Horn	16-4
Ignition	1-3
Illumination	5-2
Interior Light	6-2
Light Auto Turn Off	3-3
Moon Roof	16-2
Power Seat	12-2
Power Source	1~25-1
Power Window	13-2
Radio and Player	21-3
Rear Heater	17-2
Rear Wiper and Washer	8-3
Rear Window Defogger	19-2
Remote Control Mirror	19-3
Shift Lock	3-2
SRS	4-4
Starting	1-2
Stop Light	18-4
Taillight	6-2
Theft Deterrent	14-2
Turn Signal and Hazard Warning Light	7-2
Unlock and Seat Belt Warning	18-2

1 LX450 ELECTRICAL WIRING DIAGRAM

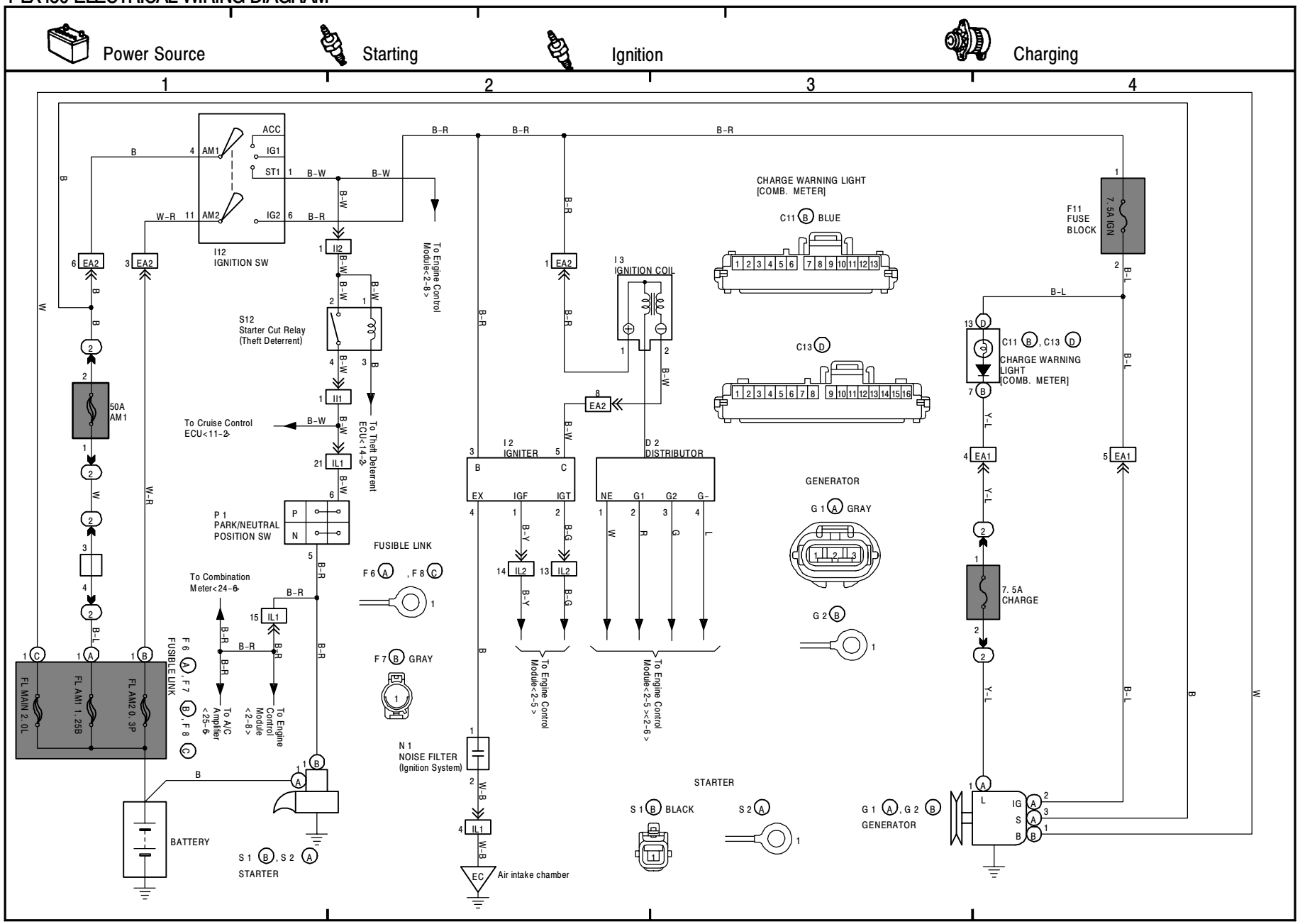

K

2 LX450

(Cont. next page)

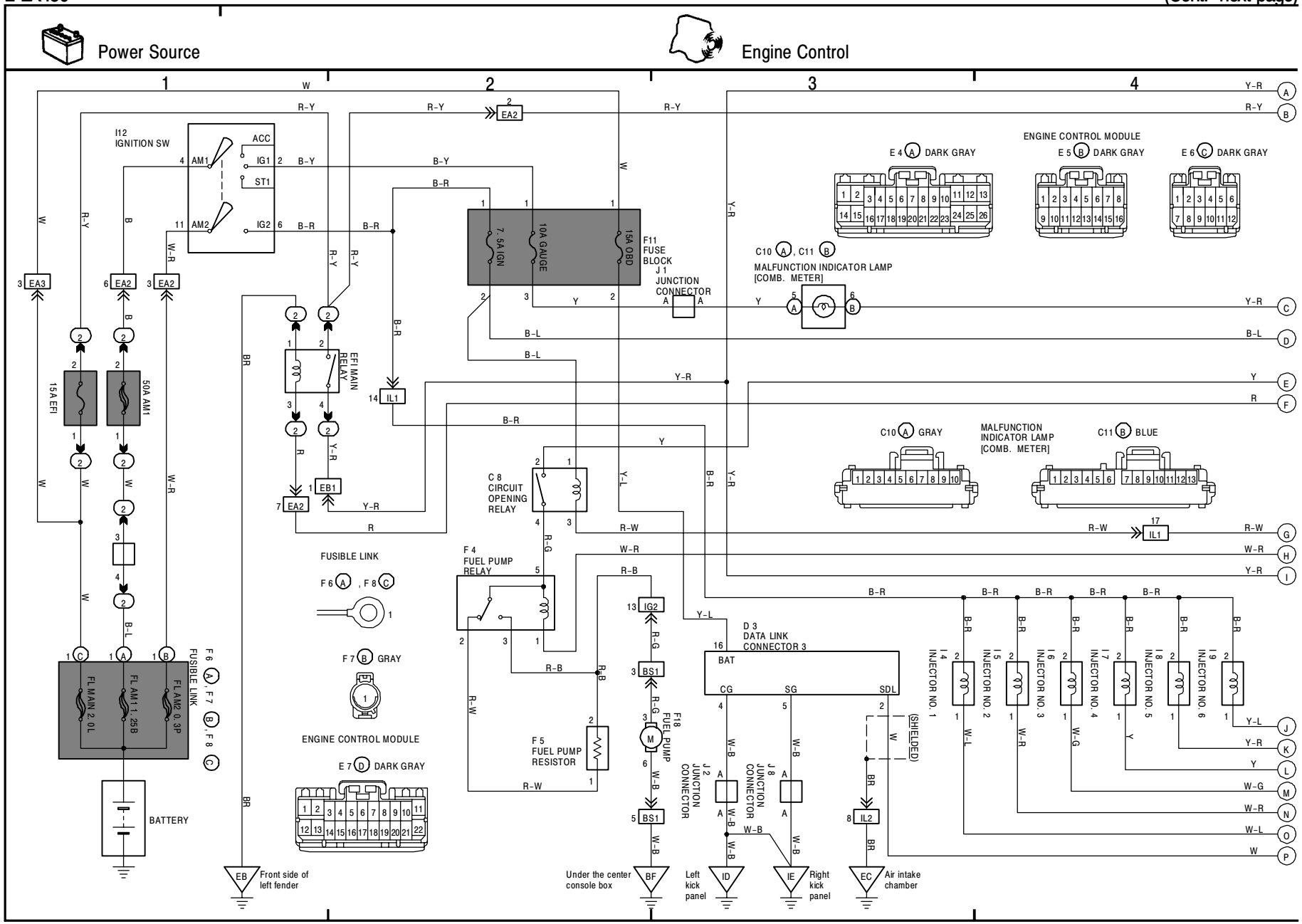

2 LX450(Cont' d)

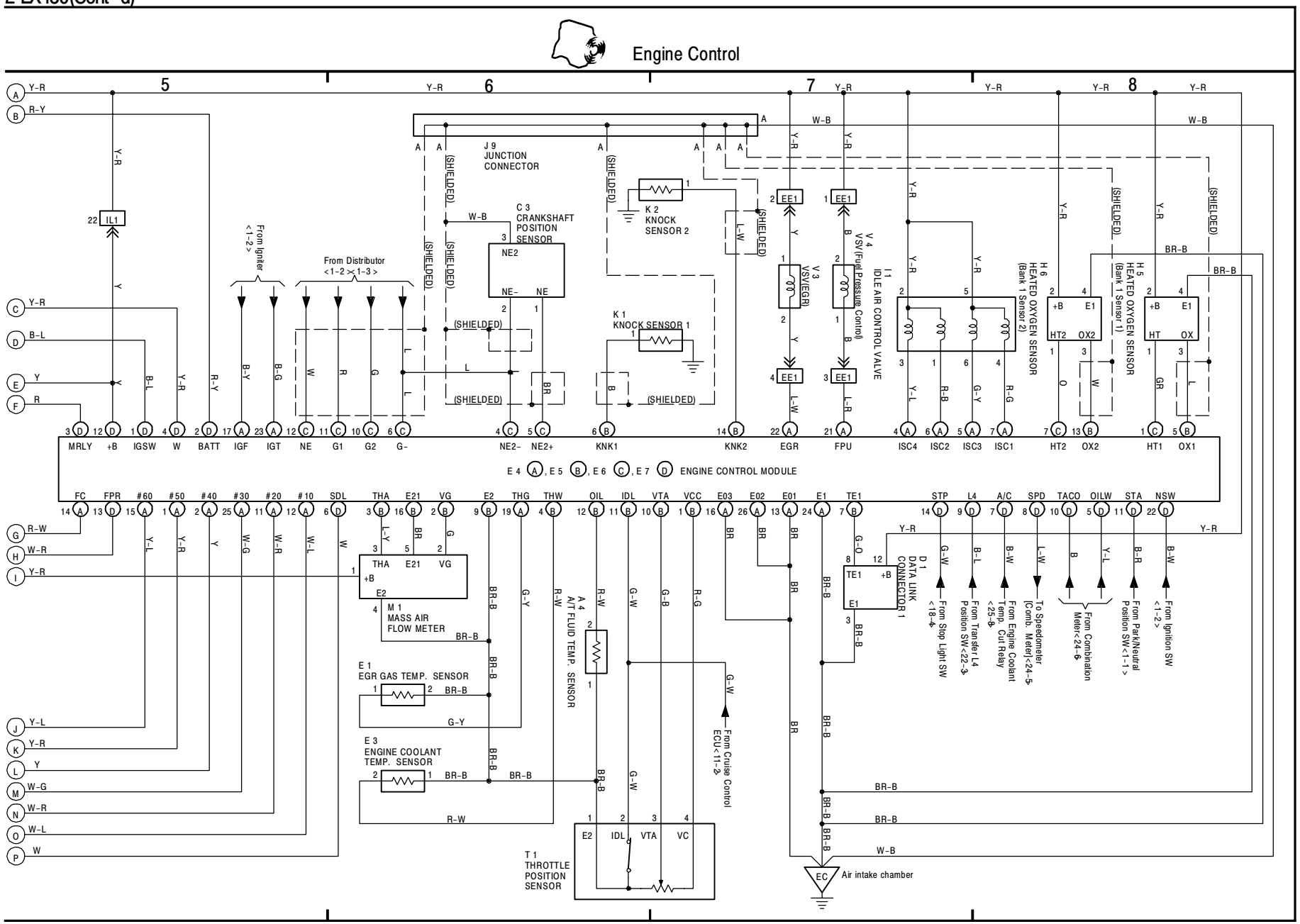

K

3 LX450

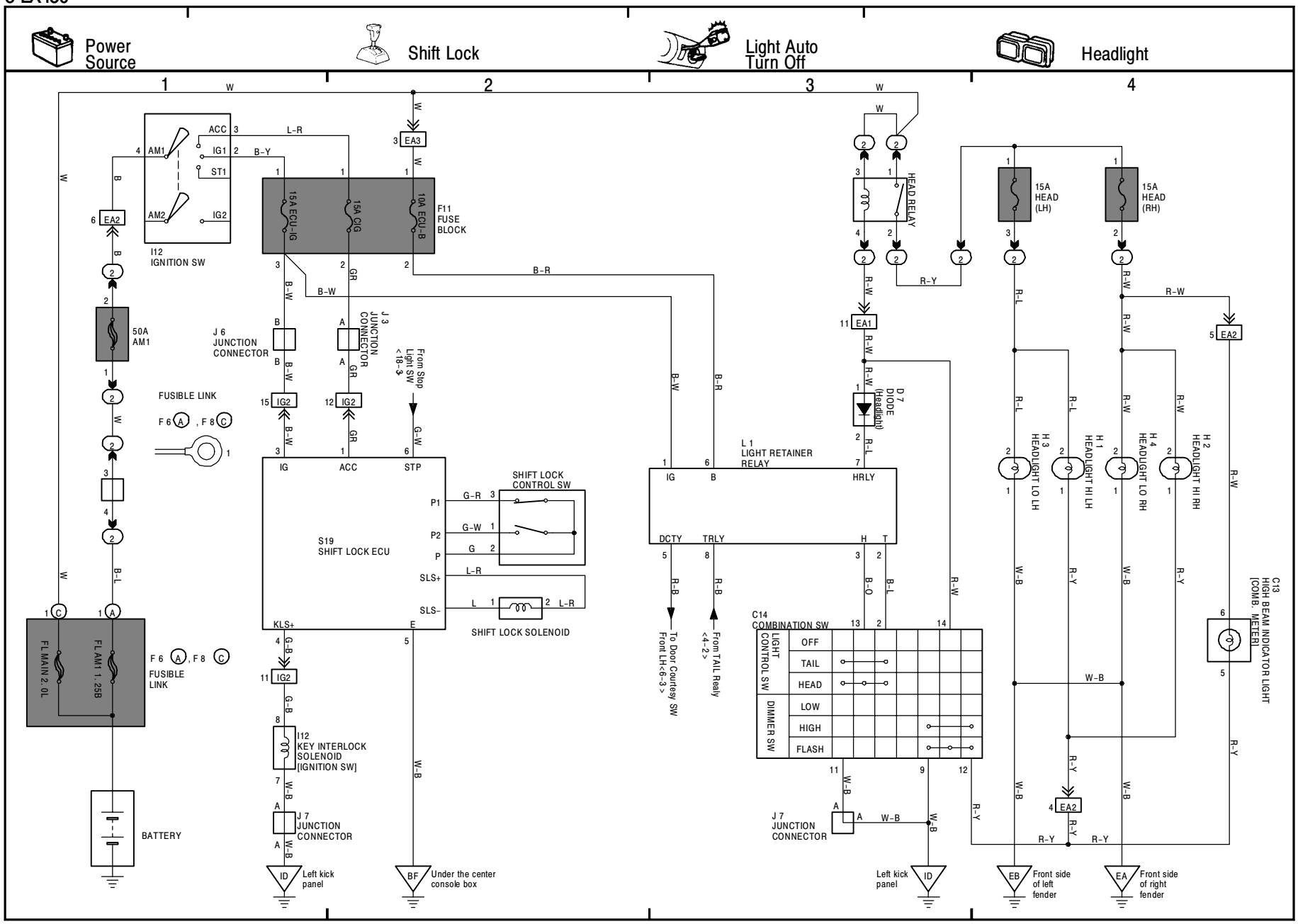
Power Source
Shift Lock
Light Auto Turn Off
Headlight
1
2
3
4
I12 IGNITION SW
ACC
IG1
ST1
AM1
AM2
IG2
F11 FUSE BLOCK
15A ECU-IG
15A CIG
10A ECU-B
EA3
EA2
50A AM1
J 6 JUNCTION CONNECTOR
J 3 JUNCTION CONNECTOR
From Stop Light SW <18-3>
FUSIBLE LINK
F 6 A , F 8 C
IG2
IG
ACC
STP
S19 SHIFT LOCK ECU
P1
P2
P
SLS+
SLS-
KLS+
E
SHIFT LOCK CONTROL SW
SHIFT LOCK SOLENOID
FL MAIN 2.0L
FL AM1 1.25B
BATTERY
I12 KEY INTERLOCK SOLENOID [IGNITION SW]
J 7 JUNCTION CONNECTOR
ID Left kick panel
BF Under the center console box
HEAD RELAY
EA1
D 7 DIODE (Headlight)
L 1 LIGHT RETAINER RELAY
IG
B
HRLY
DCTY
TRLY
H
T
To Door Courtesy SW Front LH<6-3>
From TAIL Realy <4-2>
C14 COMBINATION SW
LIGHT CONTROL SW
OFF
TAIL
HEAD
DIMMER SW
LOW
HIGH
FLASH
J 7 JUNCTION CONNECTOR
Left kick panel
ID
15A HEAD (LH)
15A HEAD (RH)
H 3 HEADLIGHT LO LH
H 1 HEADLIGHT HI LH
H 4 HEADLIGHT LO RH
H 2 HEADLIGHT HI RH
C13 HIGH BEAM INDICATOR LIGHT [COMB. METER]
EB Front side of left fender
EA Front side of right fender

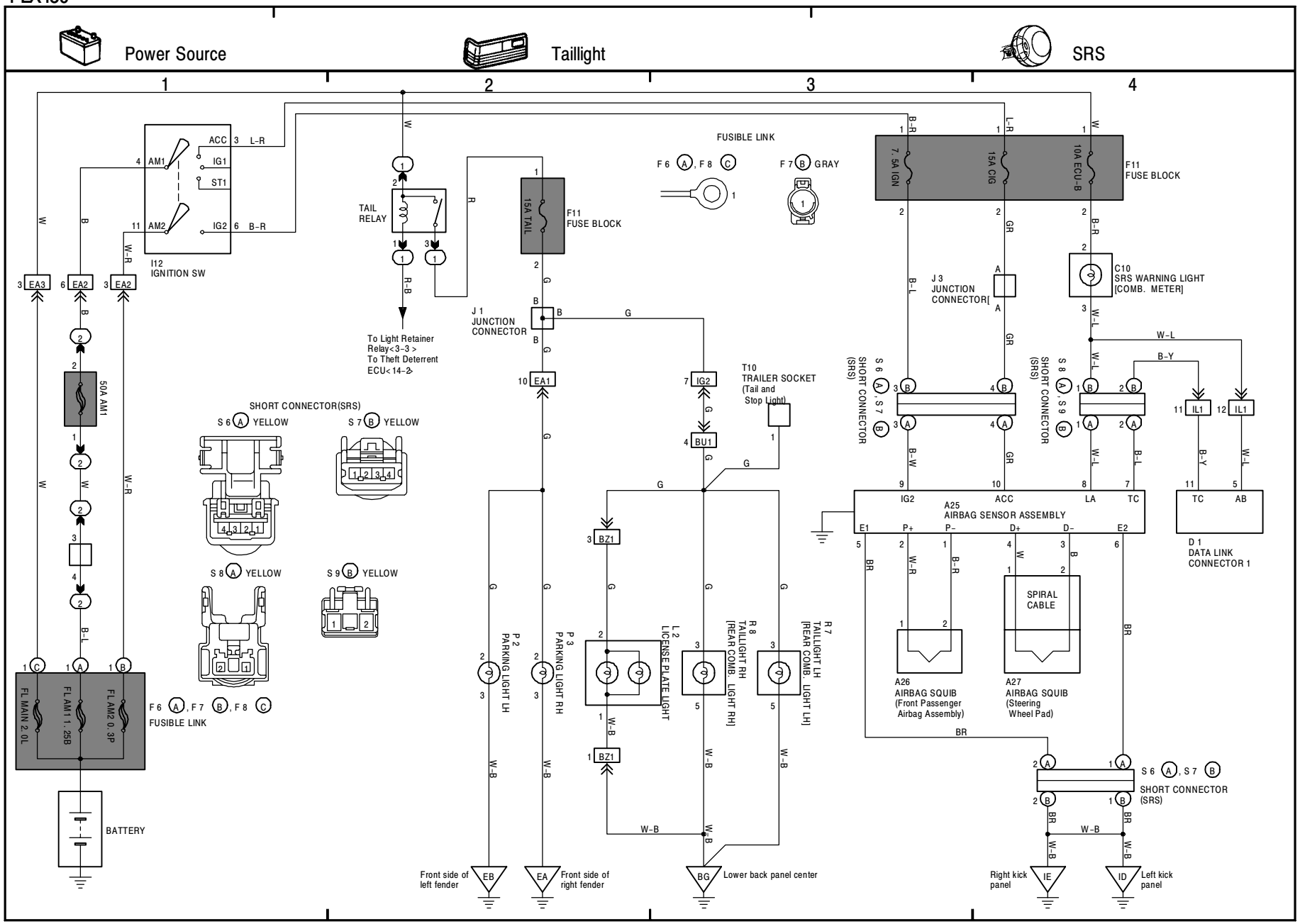
Power Source
Taillight
SRS
1
2
3
4
I12
IGNITION SW
ACC
IG1
ST1
IG2
AM1
AM2
TAIL
RELAY
To Light Retainer
Relay<3-3>
To Theft Deterrent
ECU<14-2>
15A TAIL
F11
FUSE BLOCK
J 1
JUNCTION
CONNECTOR
FUSIBLE LINK
F 6 A, F 8 C
F 7 B GRAY
7. 5A IGN
15A CIG
10A ECU-B
F11
FUSE BLOCK
J 3
JUNCTION
CONNECTOR[
C10
SRS WARNING LIGHT
[COMB. METER]
T10
TRAILER SOCKET
(Tail and
Stop Light)
S 6 A, S 7 B
SHORT CONNECTOR
(SRS)
S 8 A, S 9 B
SHORT CONNECTOR
(SRS)
SHORT CONNECTOR(SRS)
S 6 A YELLOW
S 7 B YELLOW
S 8 A YELLOW
S 9 B YELLOW
50A AM1
FL MAIN 2. 0L
FL AM1 1. 25B
FL AM2 0. 3P
F 6 A, F 7 B, F 8 C
FUSIBLE LINK
BATTERY
P 2
PARKING LIGHT LH
P 3
PARKING LIGHT RH
L 2
LICENSE PLATE LIGHT
R 8
TAILLIGHT RH
[REAR COMB. LIGHT RH]
R 7
TAILLIGHT LH
[REAR COMB. LIGHT LH]
A25
AIRBAG SENSOR ASSEMBLY
IG2
ACC
LA
TC
E1
P+
P-
D+
D-
E2
SPIRAL
CABLE
A26
AIRBAG SQUIB
(Front Passenger
Airbag Assembly)
A27
AIRBAG SQUIB
(Steering
Wheel Pad)
D 1
DATA LINK
CONNECTOR 1
TC
AB
S 6 A, S 7 B
SHORT CONNECTOR
(SRS)
Front side of
left fender
Front side of
right fender
Lower back panel center
Right kick
panel
Left kick
panel

K OVERALL ELECTRICAL WIRING DIAGRAM

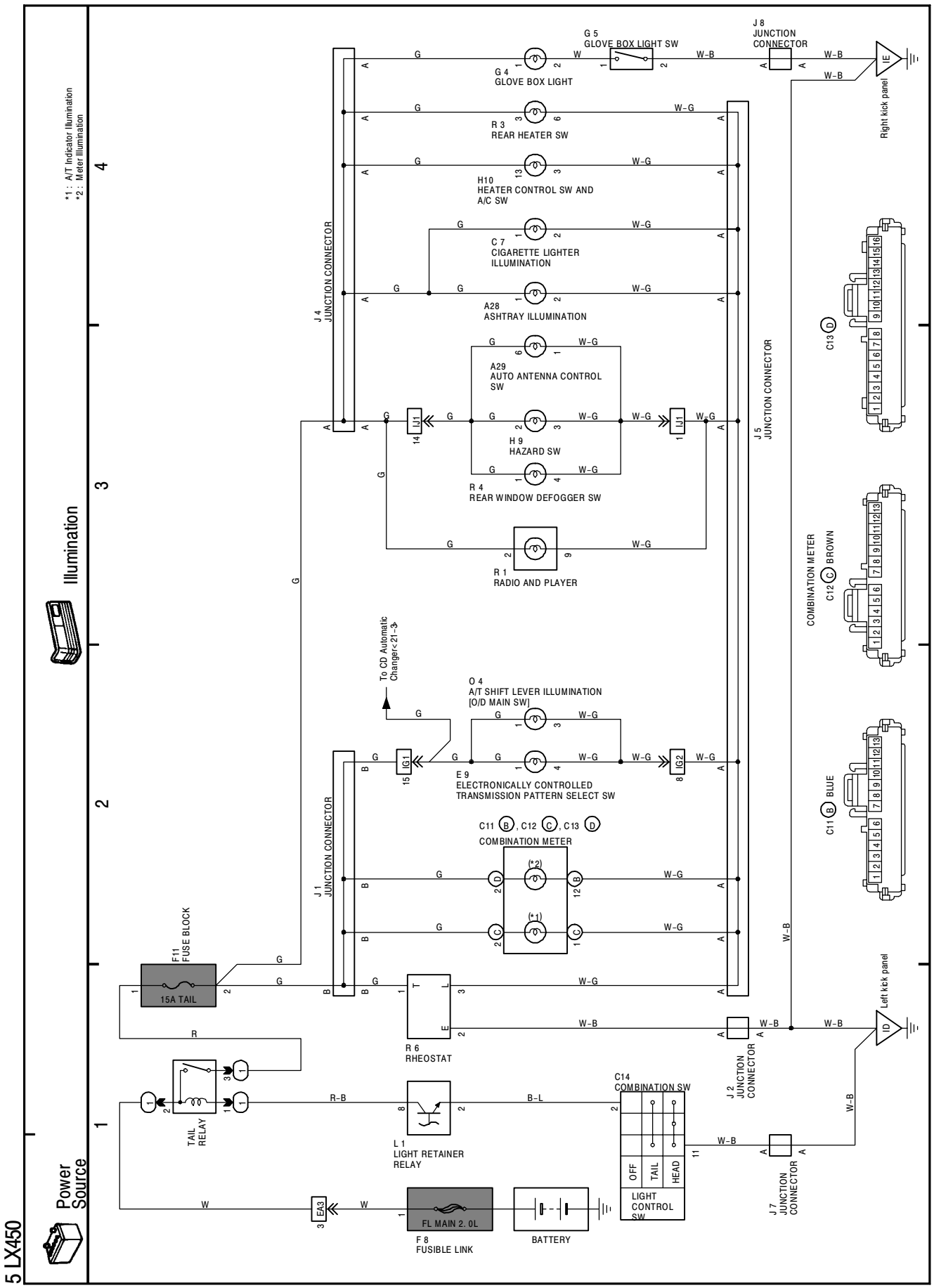

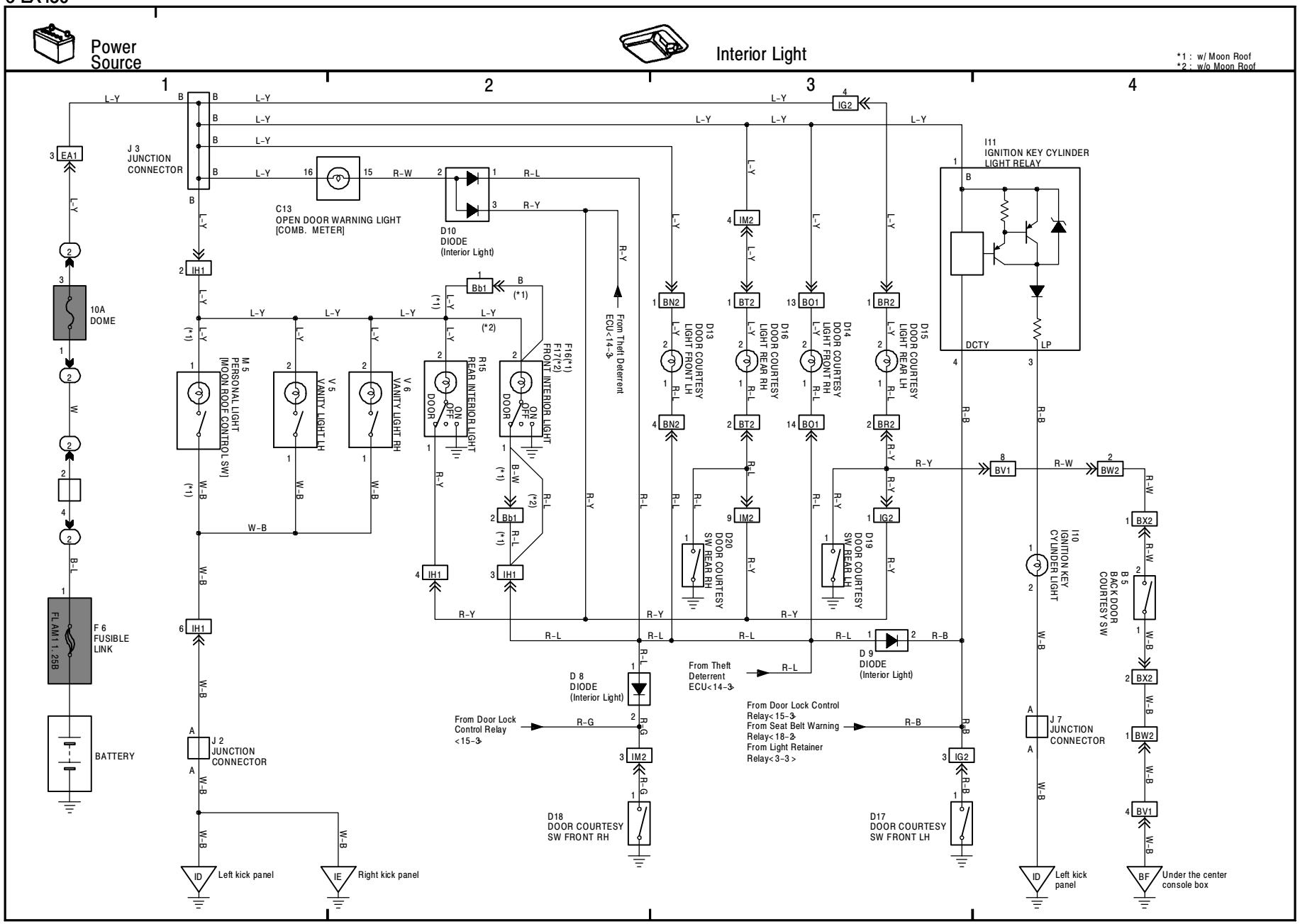
Power Source
Interior Light
*1 : w/ Moon Roof
*2 : w/o Moon Roof
1
2
3
4
J 3 JUNCTION CONNECTOR
C13 OPEN DOOR WARNING LIGHT [COMB. METER]
D10 DIODE (Interior Light)
I11 IGNITION KEY CYLINDER LIGHT RELAY
DCTY
LP
10A DOME
M 5 PERSONAL LIGHT [MOON ROOF CONTROL SW]
V 5 VANITY LIGHT LH
V 6 VANITY LIGHT RH
R15 REAR INTERIOR LIGHT
F16(*1) F17(*2) FRONT INTERIOR LIGHT
From Theft Deterrent ECU<14-3>
D13 DOOR COURTESY LIGHT FRONT LH
D16 DOOR COURTESY LIGHT REAR RH
D14 DOOR COURTESY LIGHT FRONT RH
D15 DOOR COURTESY LIGHT REAR LH
D20 DOOR COURTESY SW REAR RH
D19 DOOR COURTESY SW REAR LH
I10 IGNITION KEY CYLINDER LIGHT
B 5 BACK DOOR COURTESY SW
F 6 FUSIBLE LINK
FLAM11.25B
BATTERY
J 2 JUNCTION CONNECTOR
D 8 DIODE (Interior Light)
From Door Lock Control Relay <15-3>
From Theft Deterrent ECU<14-3>
D 9 DIODE (Interior Light)
From Door Lock Control Relay<15-3> From Seat Belt Warning Relay<18-2> From Light Retainer Relay<3-3>
J 7 JUNCTION CONNECTOR
D18 DOOR COURTESY SW FRONT RH
D17 DOOR COURTESY SW FRONT LH
Left kick panel
Right kick panel
Under the center console box

K

7 LX450

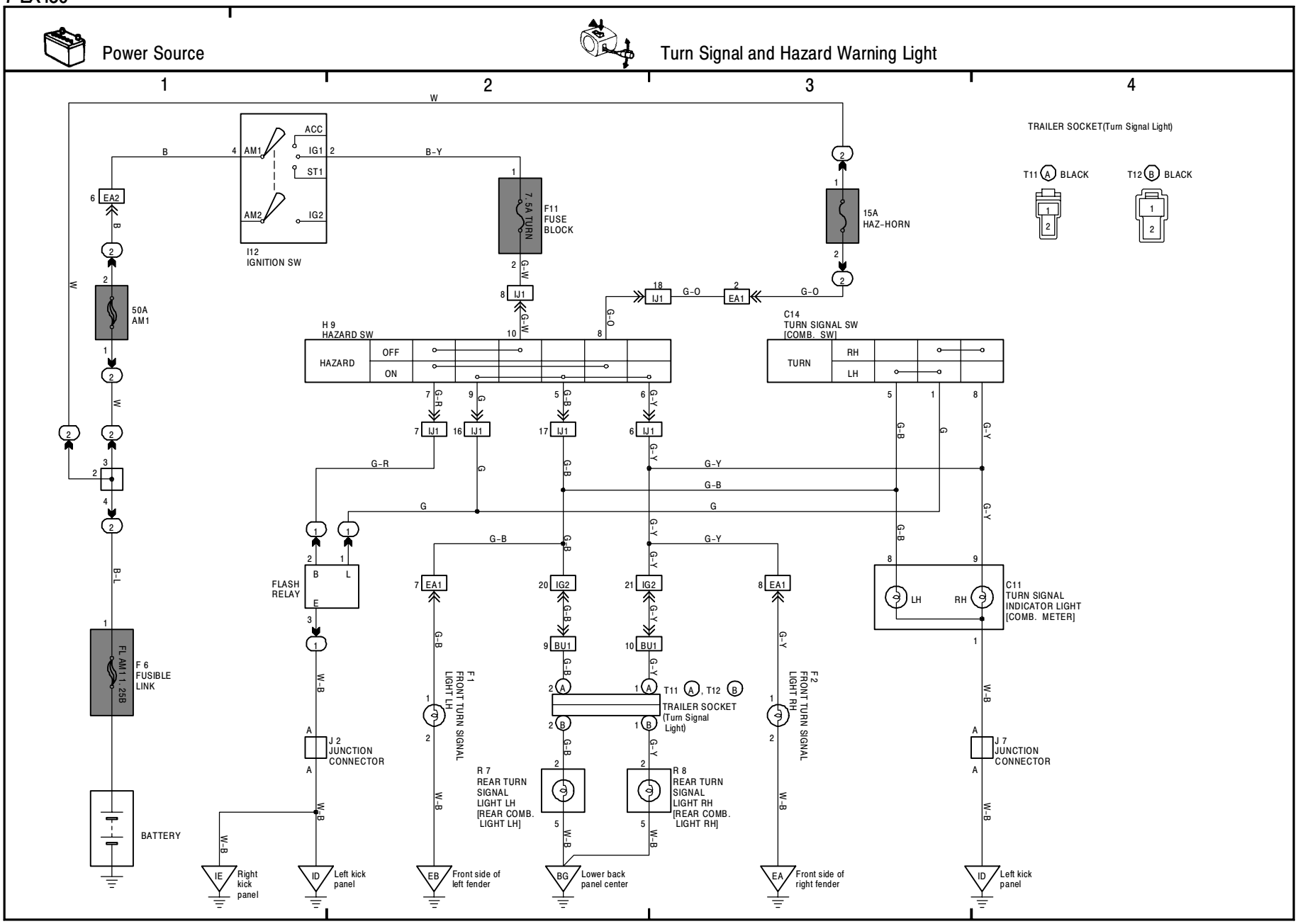
Power Source
Turn Signal and Hazard Warning Light
1
2
3
4
W
B
B-Y
ACC
IG1
ST1
IG2
AM1
AM2
I12
IGNITION SW
EA2
50A
AM1
7.5A TURN
F11
FUSE
BLOCK
G-W
IJ1
G-O
EA1
15A
HAZ-HORN
H 9
HAZARD SW
HAZARD
OFF
ON
C14
TURN SIGNAL SW
[COMB. SW]
TURN
RH
LH
G-R
G
G-B
G-Y
FLASH
RELAY
B
L
E
BU1
IG2
F 6
FUSIBLE
LINK
FL AM1 1.25B
BATTERY
W-B
J 2
JUNCTION
CONNECTOR
F 1
FRONT TURN SIGNAL
LIGHT LH
F 2
FRONT TURN SIGNAL
LIGHT RH
T11 A , T12 B
TRAILER SOCKET
(Turn Signal
Light)
R 7
REAR TURN
SIGNAL
LIGHT LH
[REAR COMB.
LIGHT LH]
R 8
REAR TURN
SIGNAL
LIGHT RH
[REAR COMB.
LIGHT RH]
C11
TURN SIGNAL
INDICATOR LIGHT
[COMB. METER]
LH
RH
J 7
JUNCTION
CONNECTOR
TRAILER SOCKET(Turn Signal Light)
T11 A BLACK
T12 B BLACK
IE Right kick panel
ID Left kick panel
EB Front side of left fender
BG Lower back panel center
EA Front side of right fender
ID Left kick panel

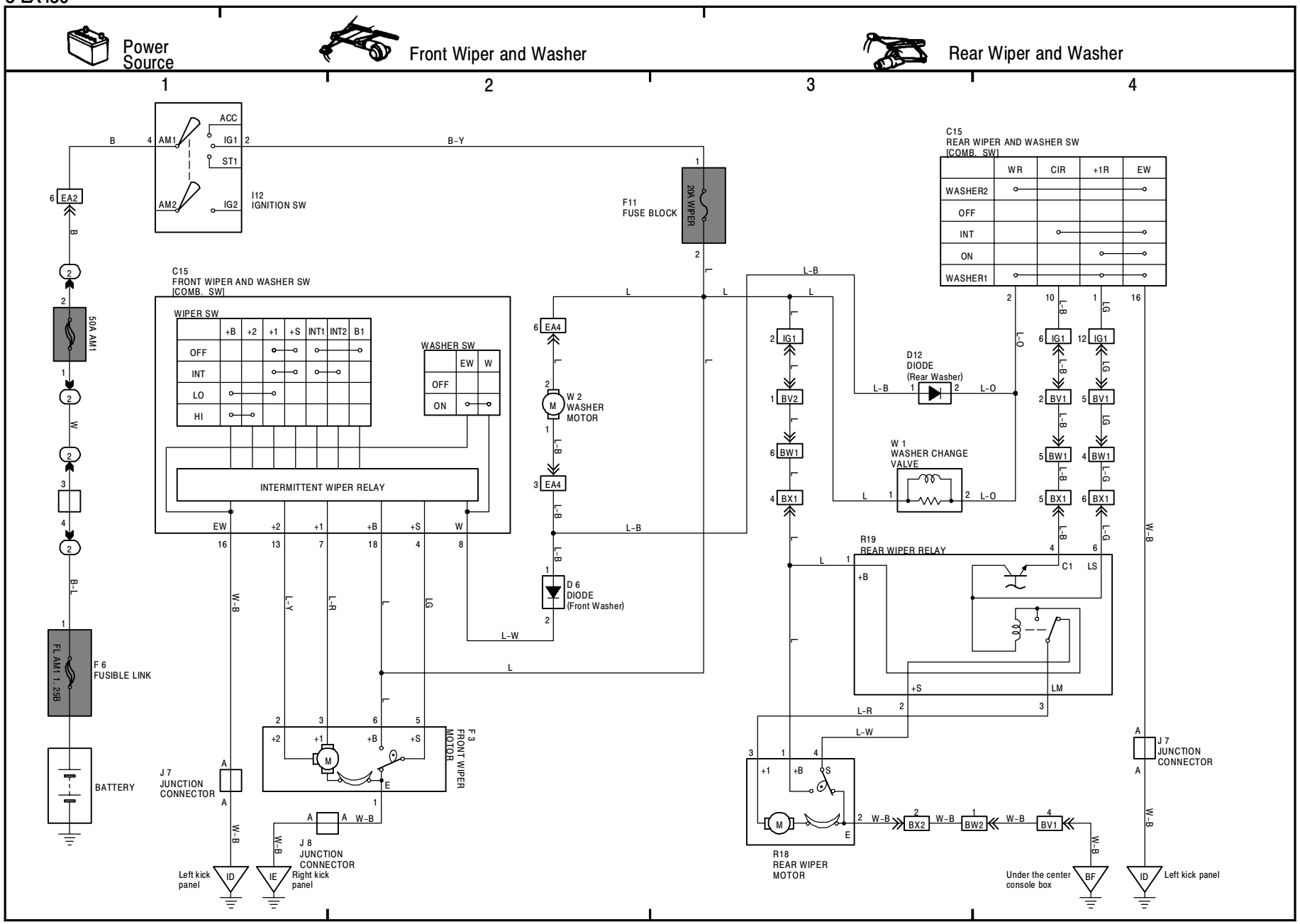
Power Source
Front Wiper and Washer
Rear Wiper and Washer
1
2
3
4
ACC
IG1
ST1
AM1
AM2
IG2
I12
IGNITION SW
B
B-Y
EA2
50A AM1
F 6
FUSIBLE LINK
FL AM1 1.25B
BATTERY
F11
FUSE BLOCK
20A WIPER
C15
FRONT WIPER AND WASHER SW
[COMB. SW]
WIPER SW
+B
+2
+1
+S
INT1
INT2
B1
OFF
INT
LO
HI
WASHER SW
EW
W
ON
INTERMITTENT WIPER RELAY
W 2
WASHER
MOTOR
D 6
DIODE
(Front Washer)
F 3
FRONT WIPER
MOTOR
J 7
JUNCTION
CONNECTOR
J 8
JUNCTION
CONNECTOR
Left kick
panel
Right kick
panel
C15
REAR WIPER AND WASHER SW
[COMB. SW]
WR
CIR
+1R
WASHER2
OFF
INT
ON
WASHER1
D12
DIODE
(Rear Washer)
W 1
WASHER CHANGE
VALVE
R19
REAR WIPER RELAY
C1
LS
LM
R18
REAR WIPER
MOTOR
BX2
BW2
BV1
Under the center
console box
Left kick panel

K

9 LX450

(Cont. next page)

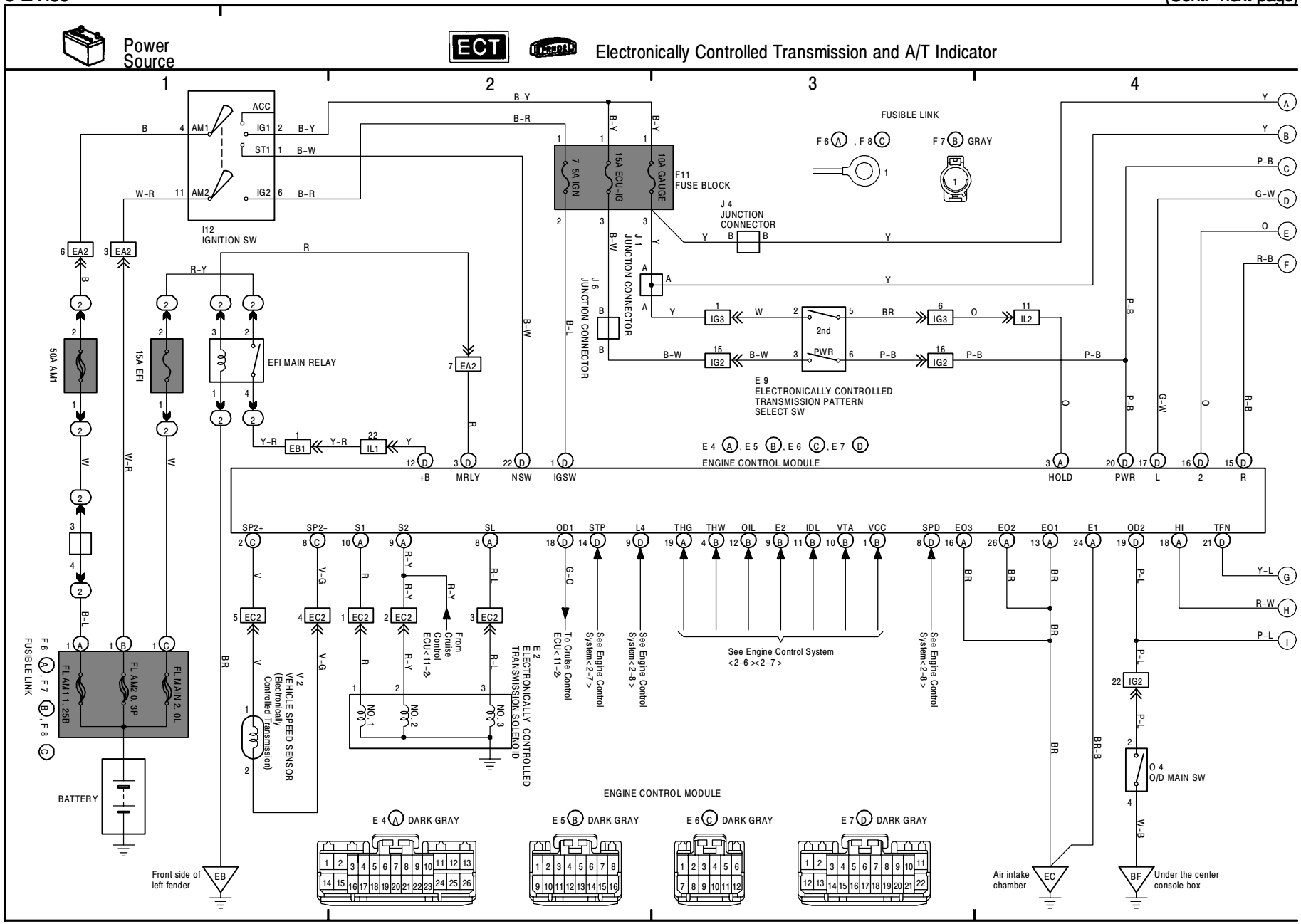

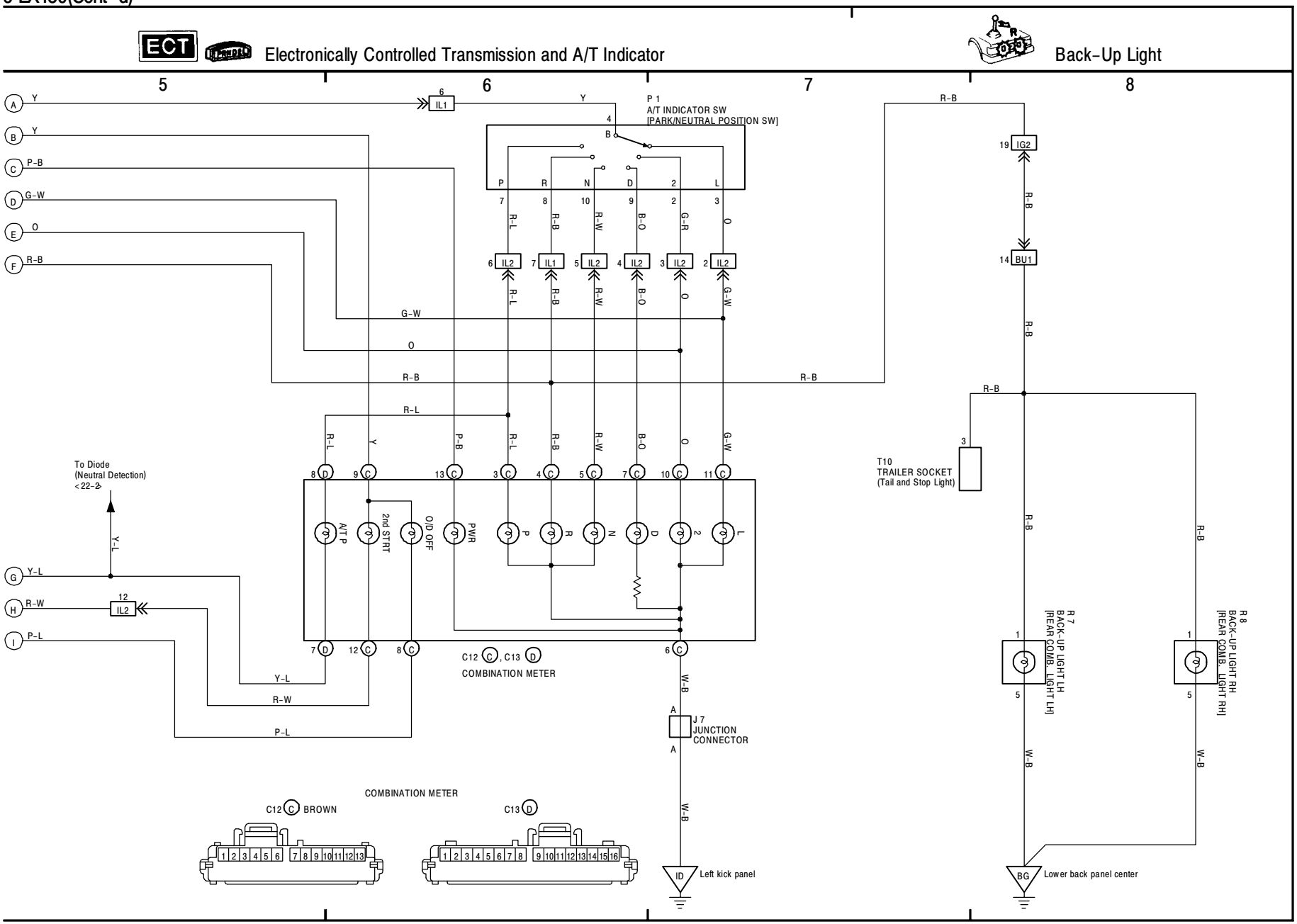
ECT
Electronically Controlled Transmission and A/T Indicator
Back-Up Light
5
6
7
8
P 1
A/T INDICATOR SW
[PARK/NEUTRAL POSITION SW]
IL1
IL2
IG2
BU1
T10
TRAILER SOCKET
(Tail and Stop Light)
To Diode
(Neutral Detection)
<22-2>
A/T P
2nd STRT
O/D OFF
PWR
C12 C, C13 D
COMBINATION METER
J 7
JUNCTION
CONNECTOR
R 7
BACK-UP LIGHT LH
[REAR COMB. LIGHT LH]
R 8
BACK-UP LIGHT RH
[REAR COMB. LIGHT RH]
C12 C BROWN
C13 D
ID
Left kick panel
BG
Lower back panel center

K

K OVERALL ELECTRICAL WIRING DIAGRAM

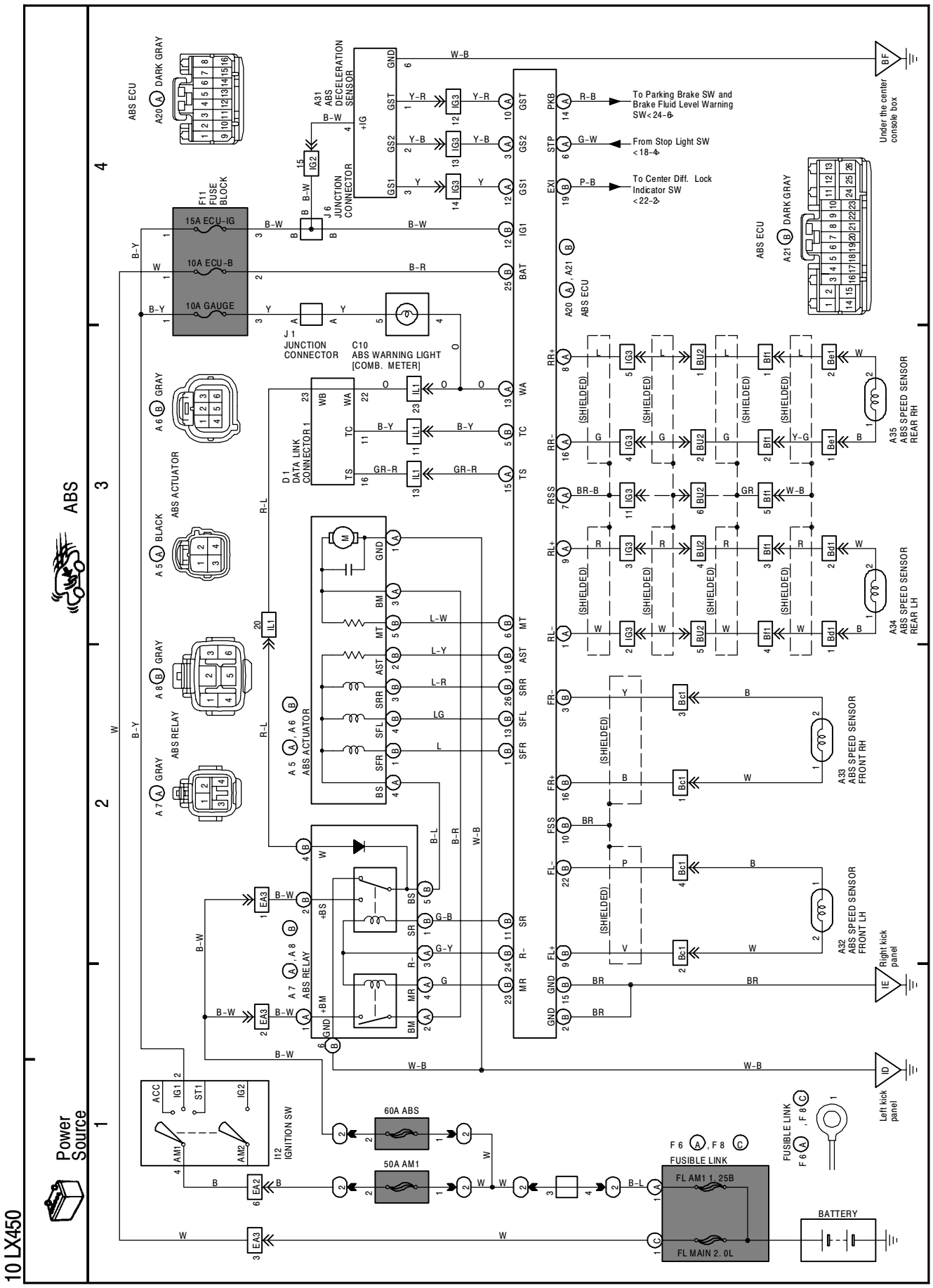

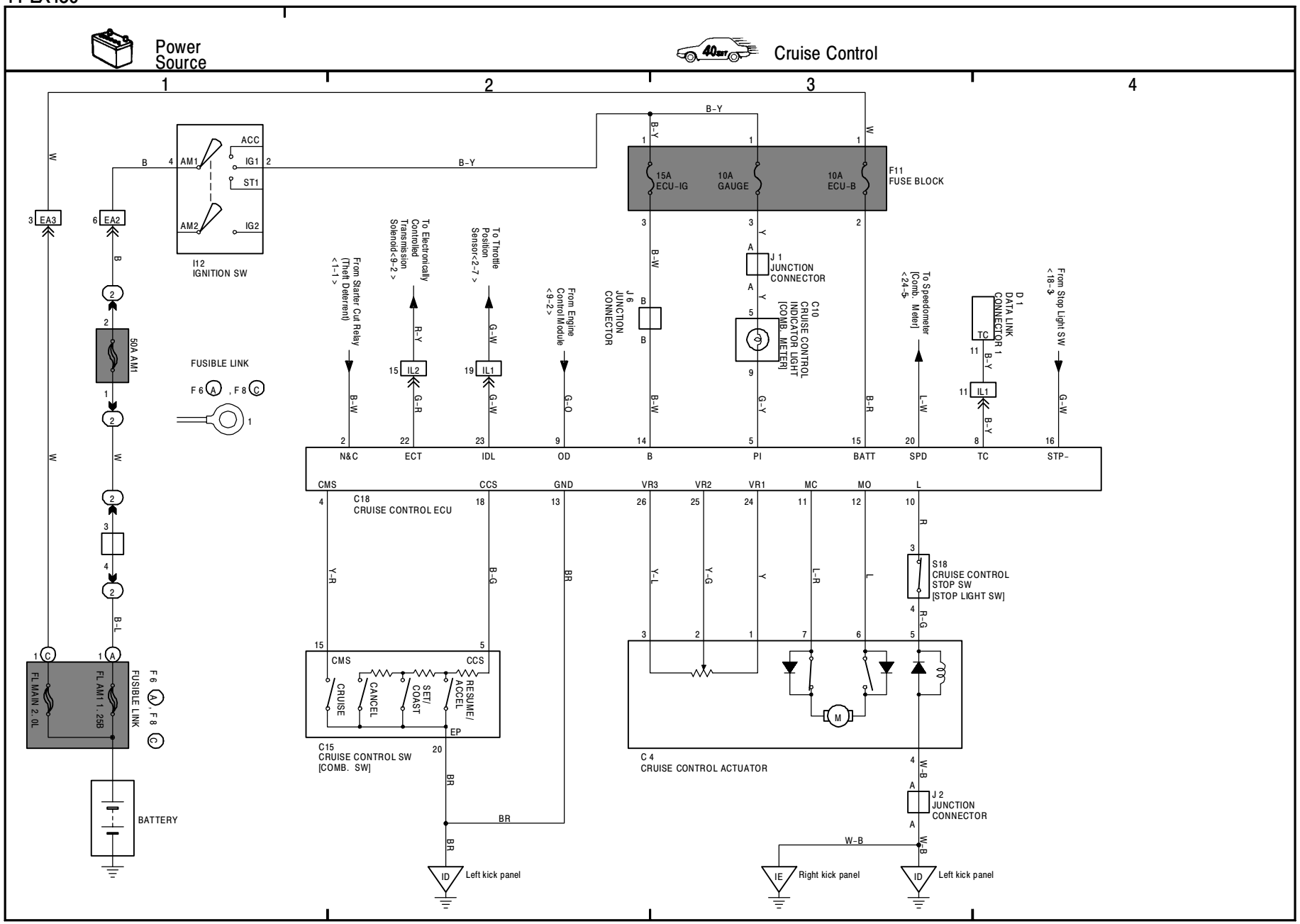
Power Source
Cruise Control
1
2
3
4
I12 IGNITION SW
ACC
IG1
ST1
IG2
AM1
AM2
EA3
EA2
50A AM1
FUSIBLE LINK
F 6 A , F 8 C
FL MAIN 2.0L
FL AM1 1.25B
BATTERY
F11 FUSE BLOCK
15A ECU-IG
10A GAUGE
10A ECU-B
J 1 JUNCTION CONNECTOR
J 6 JUNCTION CONNECTOR
C10 CRUISE CONTROL INDICATOR LIGHT [COMB. METER]
D 1 DATA LINK CONNECTOR 1
From Starter Cut Relay (Theft Deterrent) <1-1>
To Electronically Controlled Transmission Solenoid<8-2>
To Throttle Position Sensor<2-7>
From Engine Control Module <9-2>
To Speedometer [Comb. Meter] <24-5>
From Stop Light SW <18-3>
N&C
ECT
IDL
OD
B
PI
BATT
SPD
TC
STP-
CMS
CCS
GND
VR3
VR2
VR1
MC
MO
L
C18 CRUISE CONTROL ECU
S18 CRUISE CONTROL STOP SW [STOP LIGHT SW]
CRUISE
CANCEL
SET/ COAST
RESUME/ ACCEL
EP
C15 CRUISE CONTROL SW [COMB. SW]
C 4 CRUISE CONTROL ACTUATOR
J 2 JUNCTION CONNECTOR
Left kick panel
Right kick panel
Left kick panel

K

K OVERALL ELECTRICAL WIRING DIAGRAM

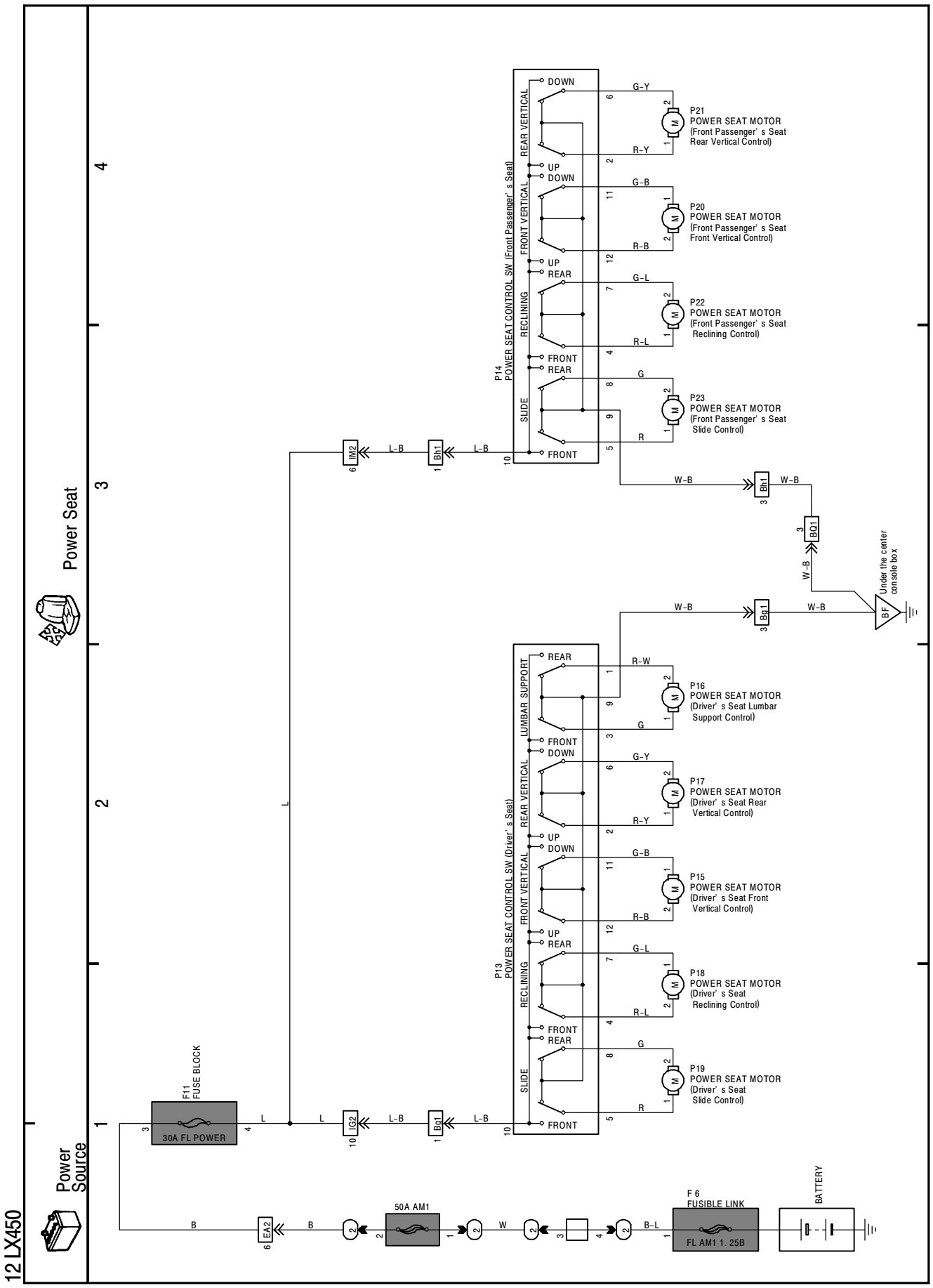

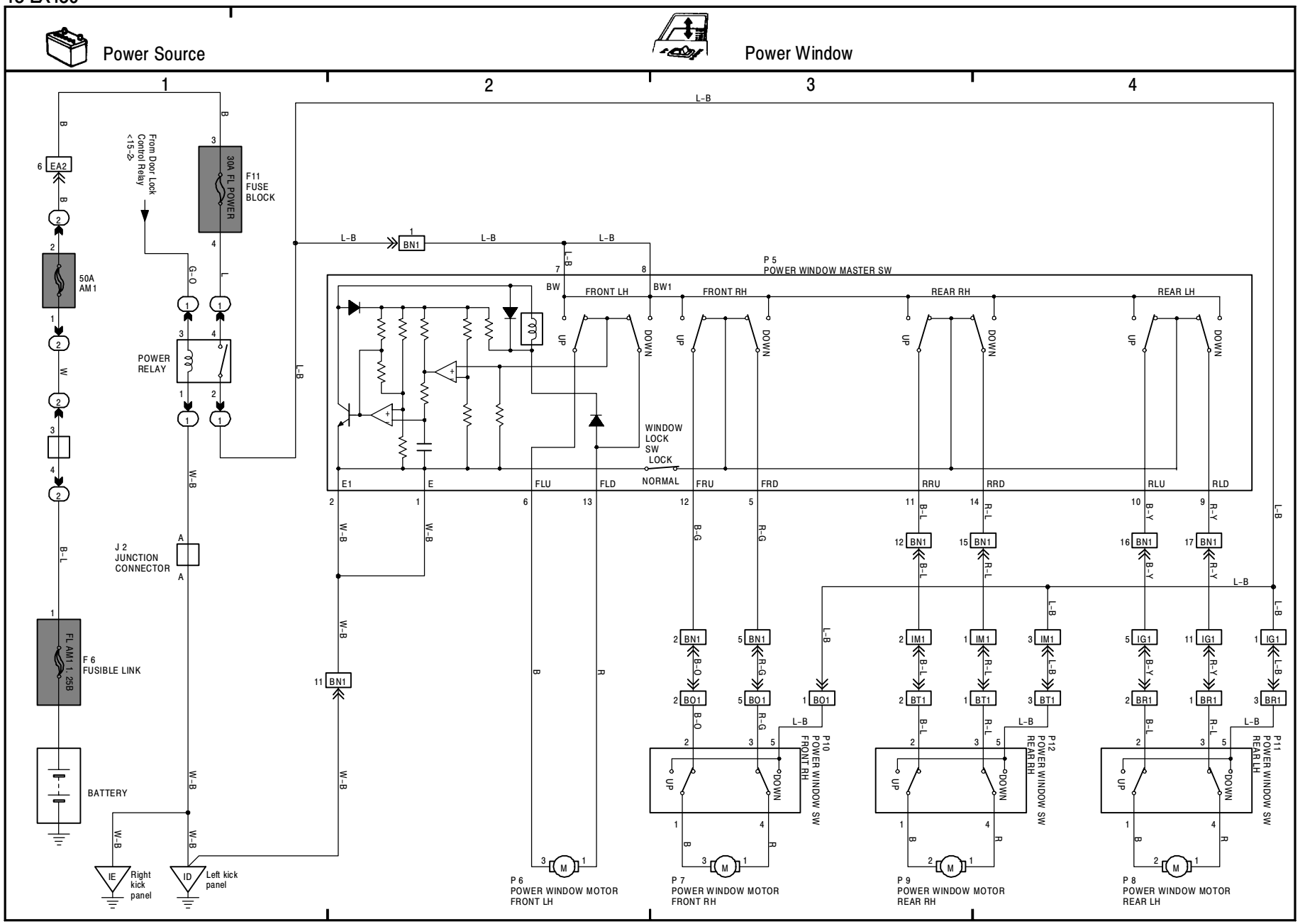
Power Source
Power Window
1
2
3
4
EA2
50A AM1
From Door Lock Control Relay <15-2>
30A FL POWER
F11 FUSE BLOCK
POWER RELAY
J 2 JUNCTION CONNECTOR
FL AM1 1. 25B
F 6 FUSIBLE LINK
BATTERY
IE Right kick panel
ID Left kick panel
BN1
P 5 POWER WINDOW MASTER SW
FRONT LH
FRONT RH
REAR RH
REAR LH
UP
DOWN
WINDOW LOCK SW
LOCK
NORMAL
E1
E
FLU
FLD
FRU
FRD
RRU
RRD
RLU
RLD
BW
BW1
BO1
IM1
BT1
IG1
BR1
P10 POWER WINDOW SW FRONT RH
P12 POWER WINDOW SW REAR RH
P11 POWER WINDOW SW REAR LH
P 6 POWER WINDOW MOTOR FRONT LH
P 7 POWER WINDOW MOTOR FRONT RH
P 9 POWER WINDOW MOTOR REAR RH
P 8 POWER WINDOW MOTOR REAR LH

K

14 LX450

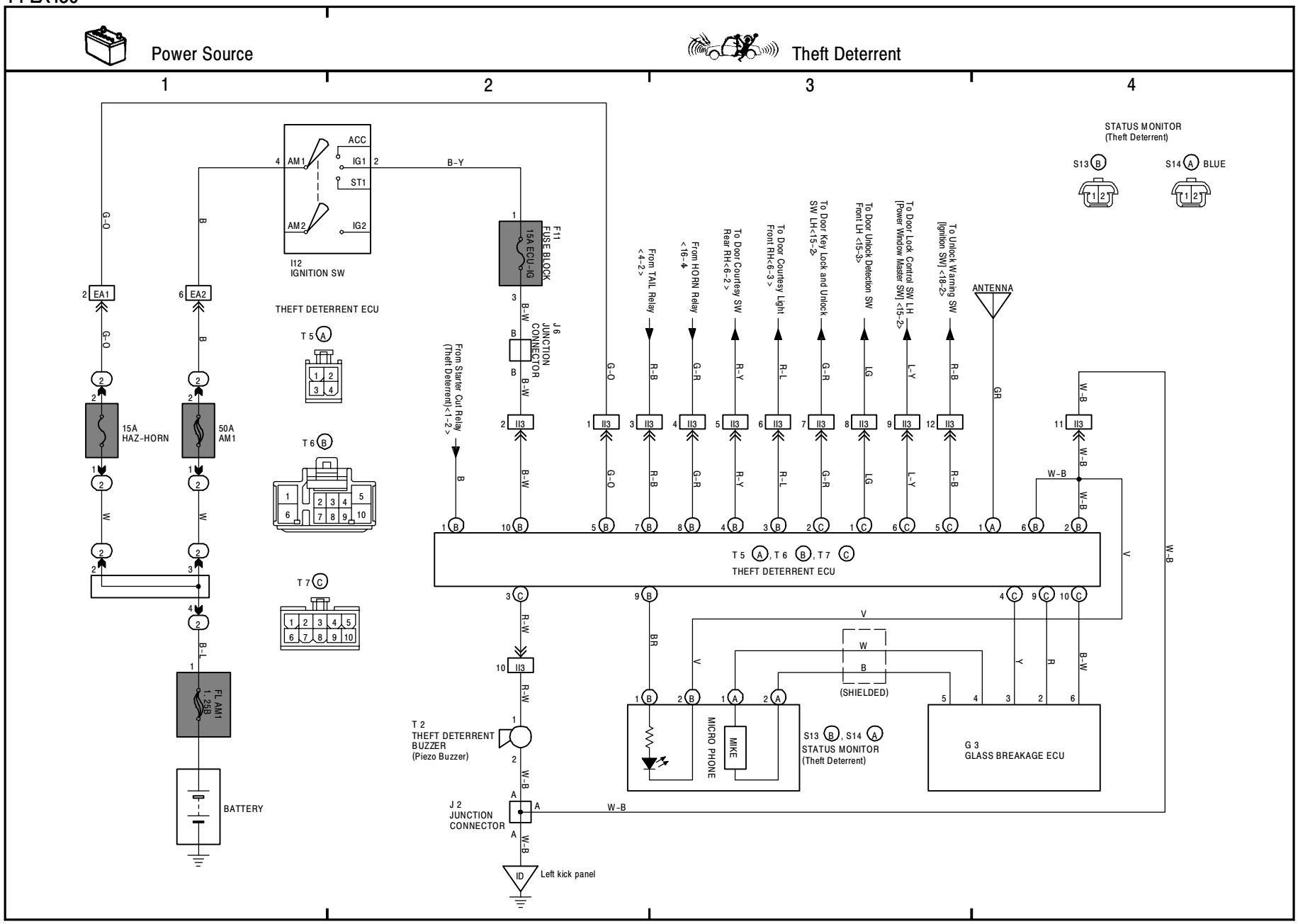
Power Source
Theft Deterrent
1
2
3
4
ACC
IG1
ST1
AM1
AM2
IG2
I12
IGNITION SW
B-Y
F11
FUSE BLOCK
15A ECU-IG
J6
JUNCTION
CONNECTOR
EA1
EA2
15A
HAZ-HORN
50A
AM1
FL AM1
1.25B
BATTERY
THEFT DETERRENT ECU
T5 A
T6 B
T7 C
From Starter Cut Relay
(Theft Deterrent)<1-2>
From TAIL Relay
<4-2>
From HORN Relay
<16-4
To Door Courtesy SW
Rear RH<6-2>
To Door Courtesy Light
Front RH<6-3>
To Door Key Lock and Unlock
SW LH<15-2>
To Door Unlock Detection SW
Front LH <15-3>
To Door Lock Control SW LH
[Power Window Master SW] <15-2>
To Unlock Warning SW
[Ignition SW] <18-2>
ANTENNA
STATUS MONITOR
(Theft Deterrent)
S13 B
S14 A BLUE
T5 A, T6 B, T7 C
THEFT DETERRENT ECU
(SHIELDED)
T2
THEFT DETERRENT
BUZZER
(Piezo Buzzer)
MICRO PHONE
MIKE
S13 B, S14 A
STATUS MONITOR
(Theft Deterrent)
G3
GLASS BREAKAGE ECU
J2
JUNCTION
CONNECTOR
ID
Left kick panel

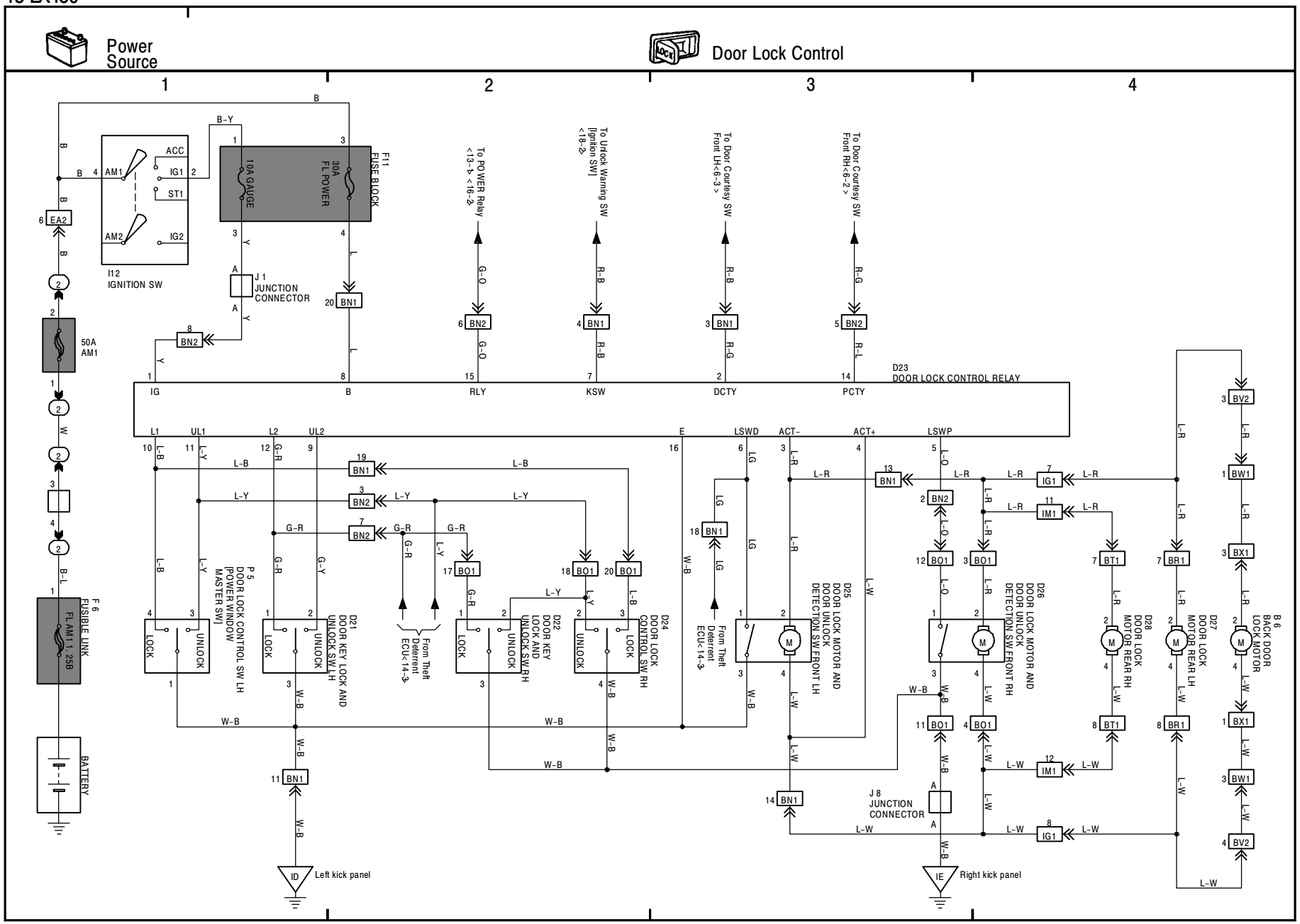
Power Source
Door Lock Control
1
2
3
4
F11 FUSE BLOCK
10A GAUGE
30A FL POWER
I12 IGNITION SW
ACC
IG1
ST1
AM1
AM2
IG2
J 1 JUNCTION CONNECTOR
EA2
50A AM1
F 6 FUSIBLE LINK FL AM1 1.25B
BATTERY
To POWER Relay <13-1> <16-2>
To Unlock Warning SW [Ignition SW] <18-2>
To Door Courtesy SW Front LH<6-3 >
To Door Courtesy SW Front RH<6-2 >
D23 DOOR LOCK CONTROL RELAY
IG
B
RLY
KSW
DCTY
PCTY
L1
UL1
L2
UL2
E
LSWD
ACT-
ACT+
LSWP
P 5 DOOR LOCK CONTROL SW LH [POWER WINDOW MASTER SW]
D21 DOOR KEY LOCK AND UNLOCK SW LH
From Theft Deterrent ECU<14-3>
D22 DOOR KEY LOCK AND UNLOCK SW RH
D24 DOOR LOCK CONTROL SW RH
From Theft Deterrent ECU<14-3>
D25 DOOR LOCK MOTOR AND DOOR UNLOCK DETECTION SW FRONT LH
D26 DOOR LOCK MOTOR AND DOOR UNLOCK DETECTION SW FRONT RH
D28 DOOR LOCK MOTOR REAR RH
D27 DOOR LOCK MOTOR REAR LH
B 6 BACK DOOR LOCK MOTOR
J 8 JUNCTION CONNECTOR
LOCK
UNLOCK
ID Left kick panel
IE Right kick panel

K

16 LX450

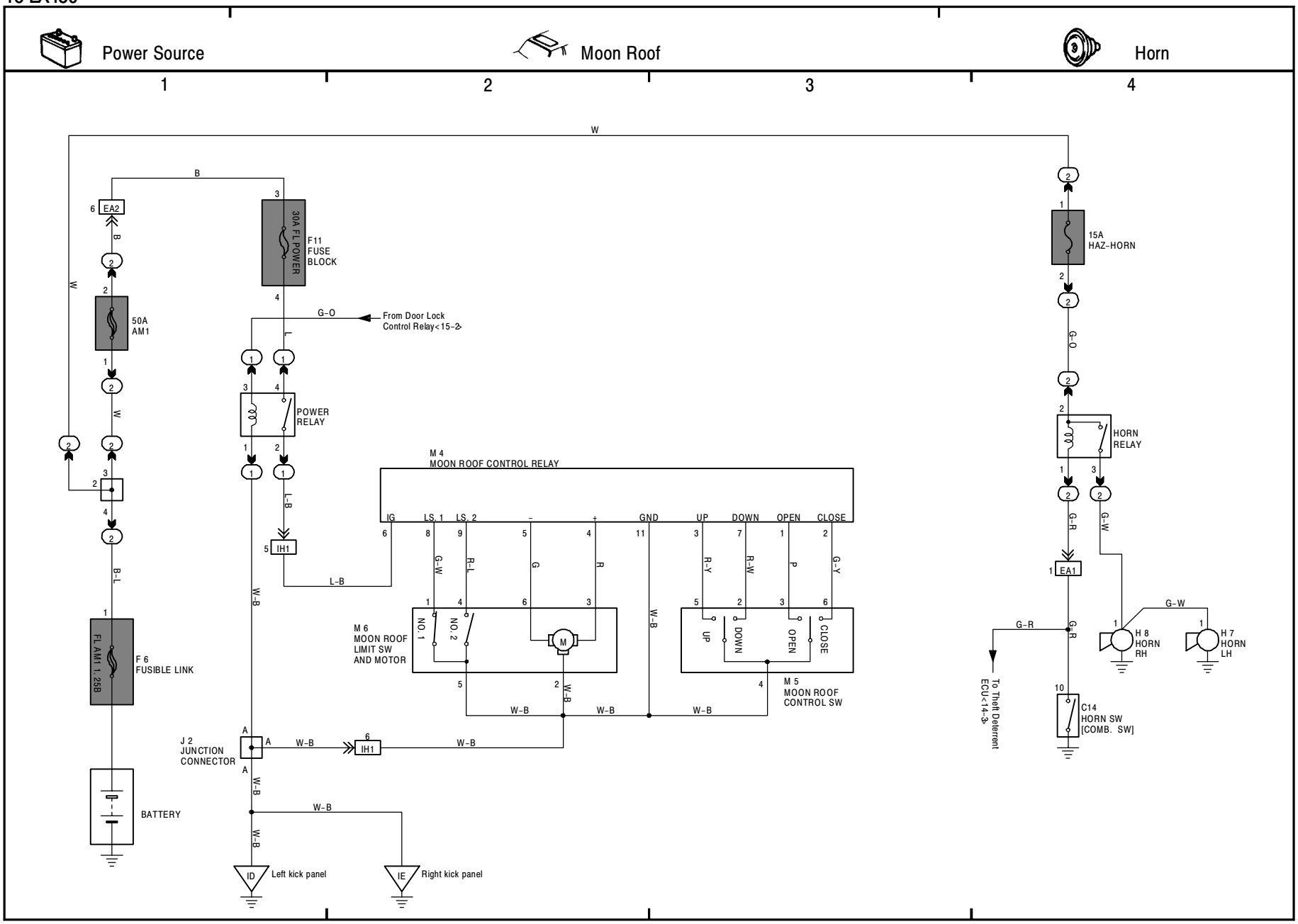
Power Source
Moon Roof
Horn
1
2
3
4
W
B
EA2
50A
AM1
F 6
FUSIBLE LINK
FL AM1 1.25B
BATTERY
30A FL POWER
F11
FUSE
BLOCK
G-O
From Door Lock
Control Relay<15-2>
POWER
RELAY
L-B
IH1
M 4
MOON ROOF CONTROL RELAY
IG
LS. 1
LS. 2
GND
UP
DOWN
OPEN
CLOSE
G-W
R-L
G
R
R-Y
R-W
P
G-Y
M 6
MOON ROOF
LIMIT SW
AND MOTOR
NO. 1
NO. 2
M 5
MOON ROOF
CONTROL SW
W-B
J 2
JUNCTION
CONNECTOR
ID
Left kick panel
IE
Right kick panel
15A
HAZ-HORN
HORN
RELAY
EA1
G-R
To Theft Deterrent
ECU<14-3>
H 8
HORN
RH
H 7
HORN
LH
C14
HORN SW
[COMB. SW]

17 LX450

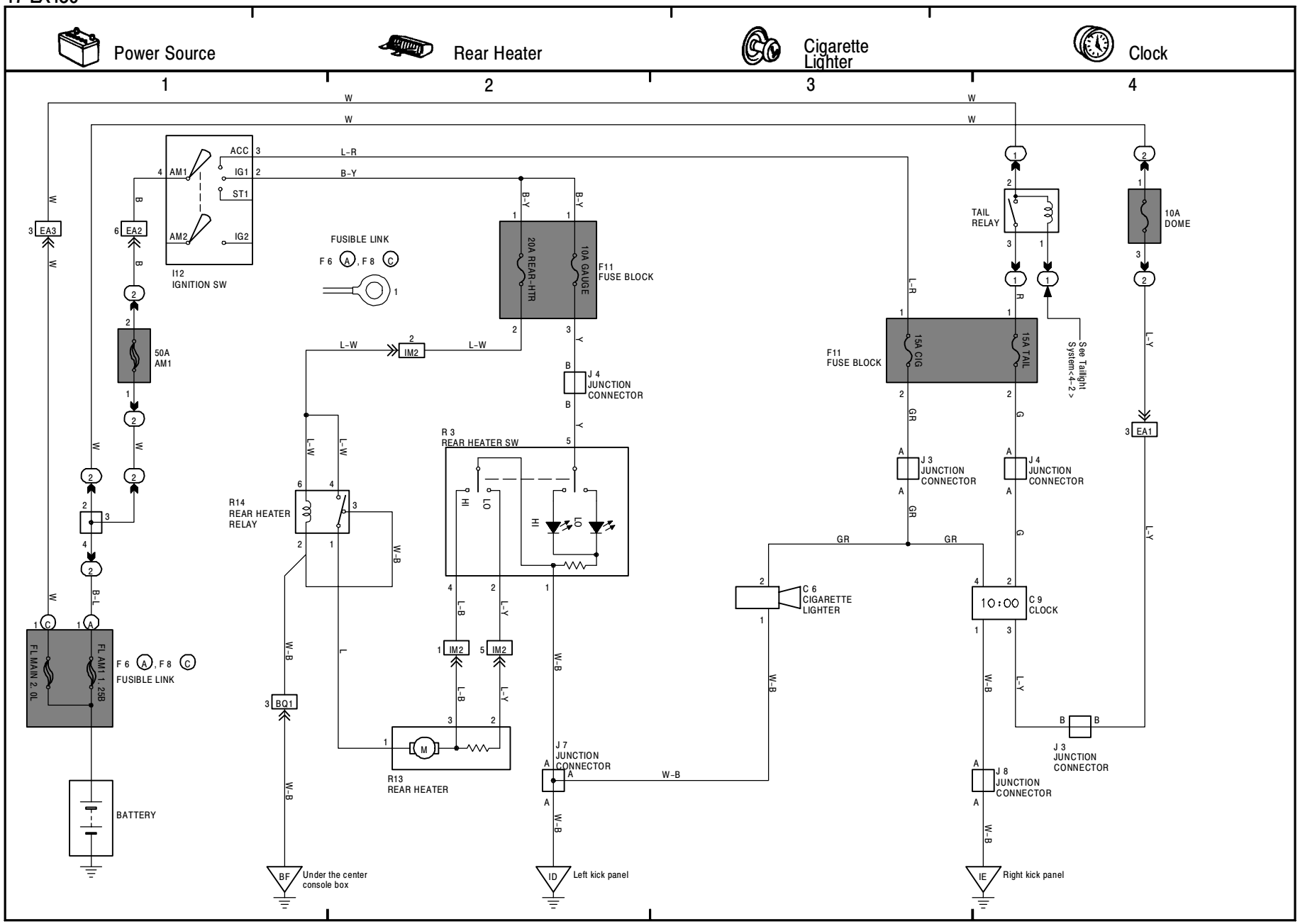
Power Source
Rear Heater
Cigarette Lighter
Clock
1
2
3
4
ACC
IG1
ST1
AM1
AM2
IG2
I12
IGNITION SW
EA3
EA2
50A
AM1
FUSIBLE LINK
F 6 A , F 8 C
20A REAR-HTR
10A GAUGE
F11
FUSE BLOCK
IM2
J 4
JUNCTION
CONNECTOR
R 3
REAR HEATER SW
HI
LO
R14
REAR HEATER
RELAY
BQ1
R13
REAR HEATER
M
FL MAIN 2.0L
FL AM1 1.25B
BATTERY
BF
Under the center
console box
J 7
JUNCTION
CONNECTOR
ID
Left kick panel
TAIL
RELAY
15A CIG
15A TAIL
See Taillight
System<4-2>
J 3
JUNCTION
CONNECTOR
C 6
CIGARETTE
LIGHTER
10:00
C 9
CLOCK
J 8
JUNCTION
CONNECTOR
IE
Right kick panel
10A
DOME
EA1

K

18 LX450

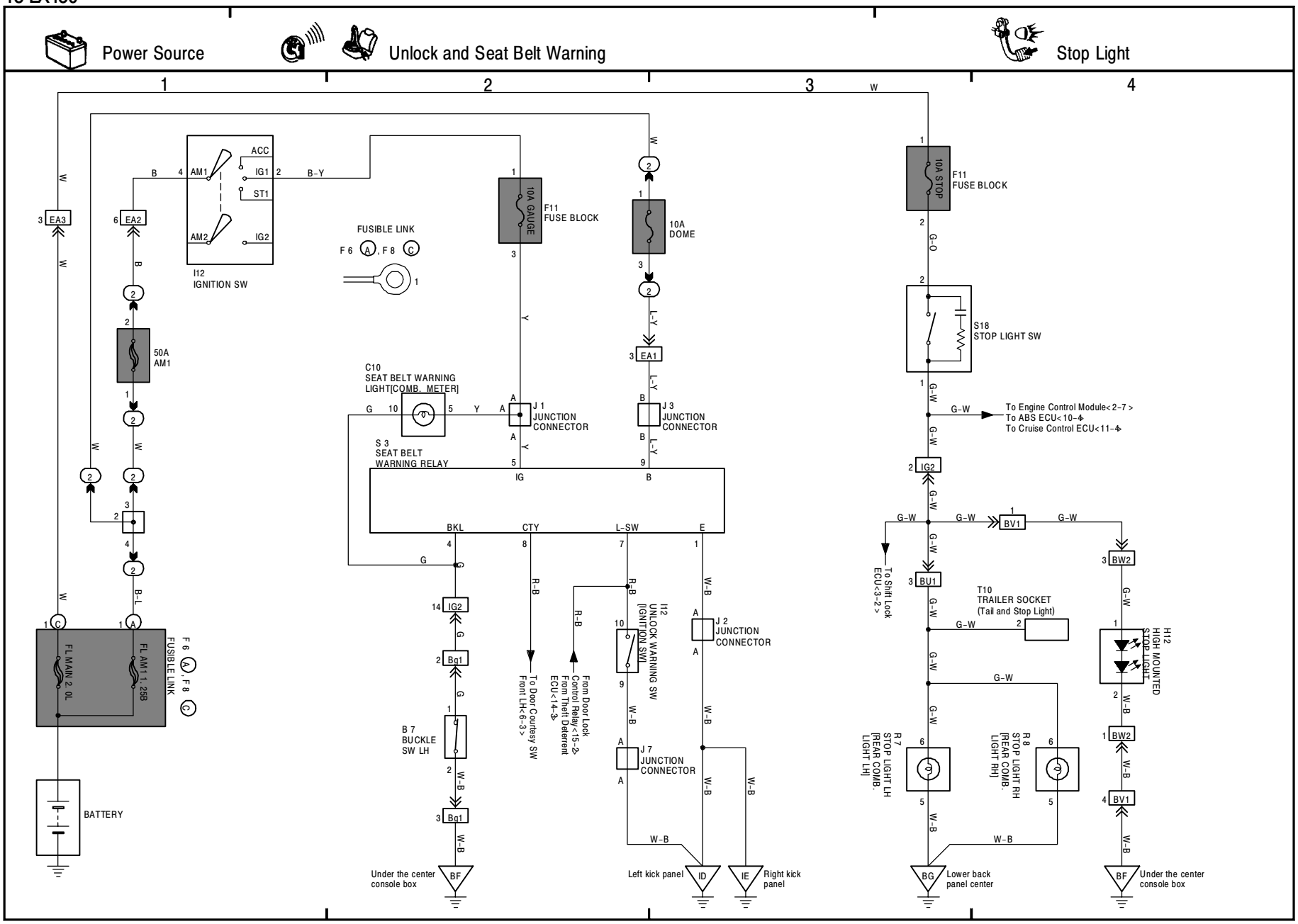
Power Source
Unlock and Seat Belt Warning
Stop Light
1
2
3
4
EA3
EA2
50A AM1
I12 IGNITION SW
ACC
IG1
ST1
AM1
AM2
IG2
B-Y
FUSIBLE LINK
F 6 A, F 8 C
FL MAIN 2. 0L
FL AM1 1. 25B
BATTERY
10A GAUGE
F11 FUSE BLOCK
10A DOME
EA1
C10 SEAT BELT WARNING LIGHT[COMB. METER]
J 1 JUNCTION CONNECTOR
J 3 JUNCTION CONNECTOR
S 3 SEAT BELT WARNING RELAY
IG
B
BKL
CTY
L-SW
E
IG2
Bg1
B 7 BUCKLE SW LH
To Door Courtesy SW Front LH<6-3>
From Door Lock Control Relay<15-2> From Theft Deterrent ECU<14-3>
I12 UNLOCK WARNING SW [IGNITION SW]
J 7 JUNCTION CONNECTOR
J 2 JUNCTION CONNECTOR
Under the center console box
Left kick panel
Right kick panel
10A STOP
S18 STOP LIGHT SW
To Engine Control Module< 2-7 >
To ABS ECU< 10-4>
To Cruise Control ECU<11-4>
BV1
BU1
To Shift Lock ECU<3-2>
T10 TRAILER SOCKET (Tail and Stop Light)
R 7 STOP LIGHT LH [REAR COMB. LIGHT LH]
R 8 STOP LIGHT RH [REAR COMB. LIGHT RH]
Lower back panel center
BW2
H12 HIGH MOUNTED STOP LIGHT

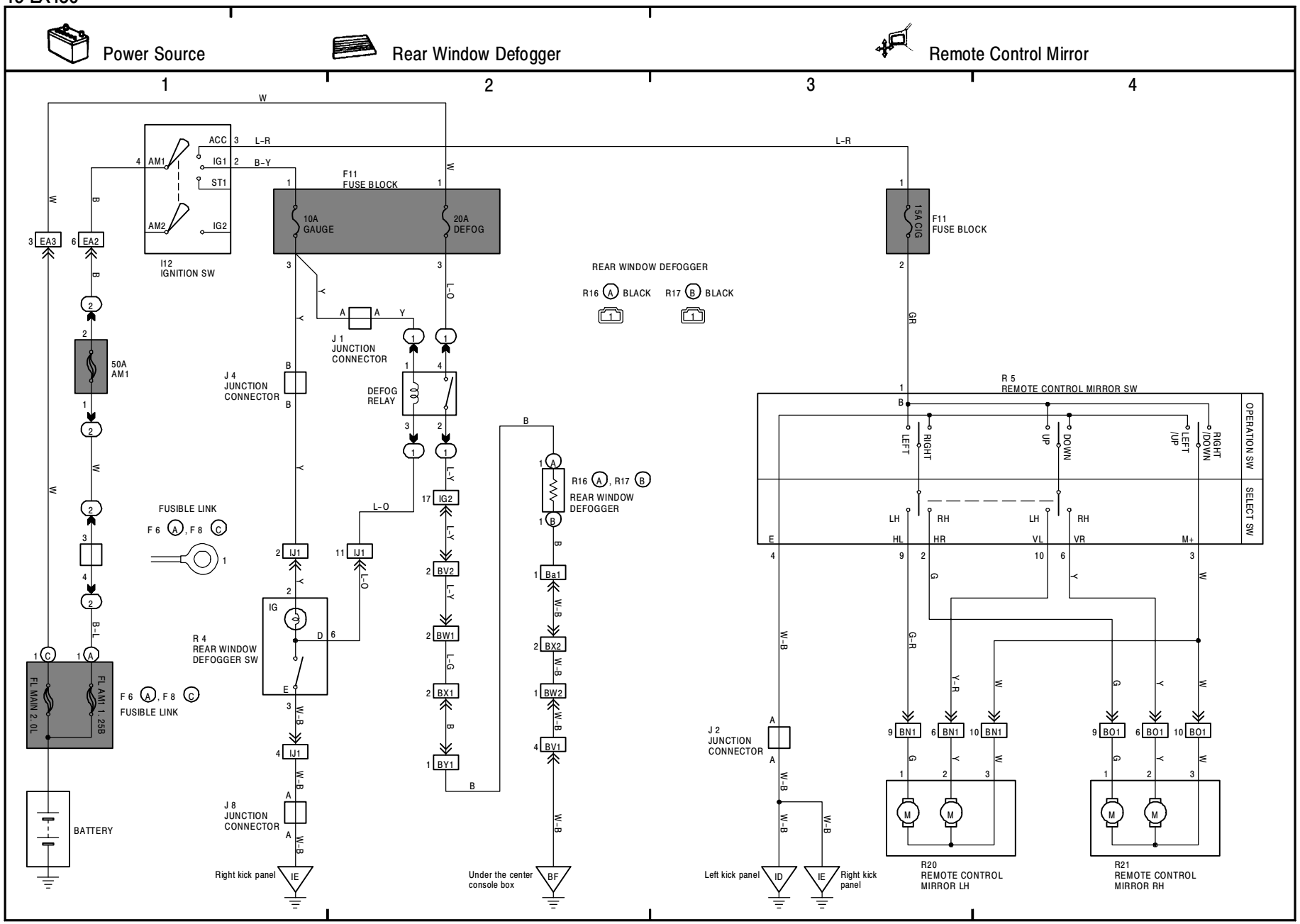
Power Source
Rear Window Defogger
Remote Control Mirror
1
2
3
4
W
ACC
IG1
ST1
AM1
AM2
IG2
I12
IGNITION SW
L-R
B-Y
F11
FUSE BLOCK
10A
GAUGE
20A
DEFOG
15A CIG
EA3
EA2
B
50A
AM1
J 1
JUNCTION
CONNECTOR
J 4
JUNCTION
CONNECTOR
DEFOG
RELAY
L-O
L-Y
IG2
BV2
BW1
BX1
BY1
REAR WINDOW DEFOGGER
R16 A BLACK
R17 B BLACK
R16 A, R17 B
REAR WINDOW
DEFOGGER
Ba1
BX2
BW2
BV1
FUSIBLE LINK
F 6 A, F 8 C
IJ1
IG
R 4
REAR WINDOW
DEFOGGER SW
W-B
J 8
JUNCTION
CONNECTOR
Right kick panel
IE
Under the center
console box
BF
B-L
FL MAIN 2.0L
FL AM1 1.25B
BATTERY
GR
R 5
REMOTE CONTROL MIRROR SW
OPERATION SW
SELECT SW
LEFT
RIGHT
UP
DOWN
LEFT
/UP
RIGHT
/DOWN
LH
RH
HL
HR
VL
VR
M+
G
Y
G-R
Y-R
BN1
BO1
J 2
JUNCTION
CONNECTOR
Left kick panel
ID
Right kick
panel
R20
REMOTE CONTROL
MIRROR LH
R21
REMOTE CONTROL
MIRROR RH

K

20 LX450

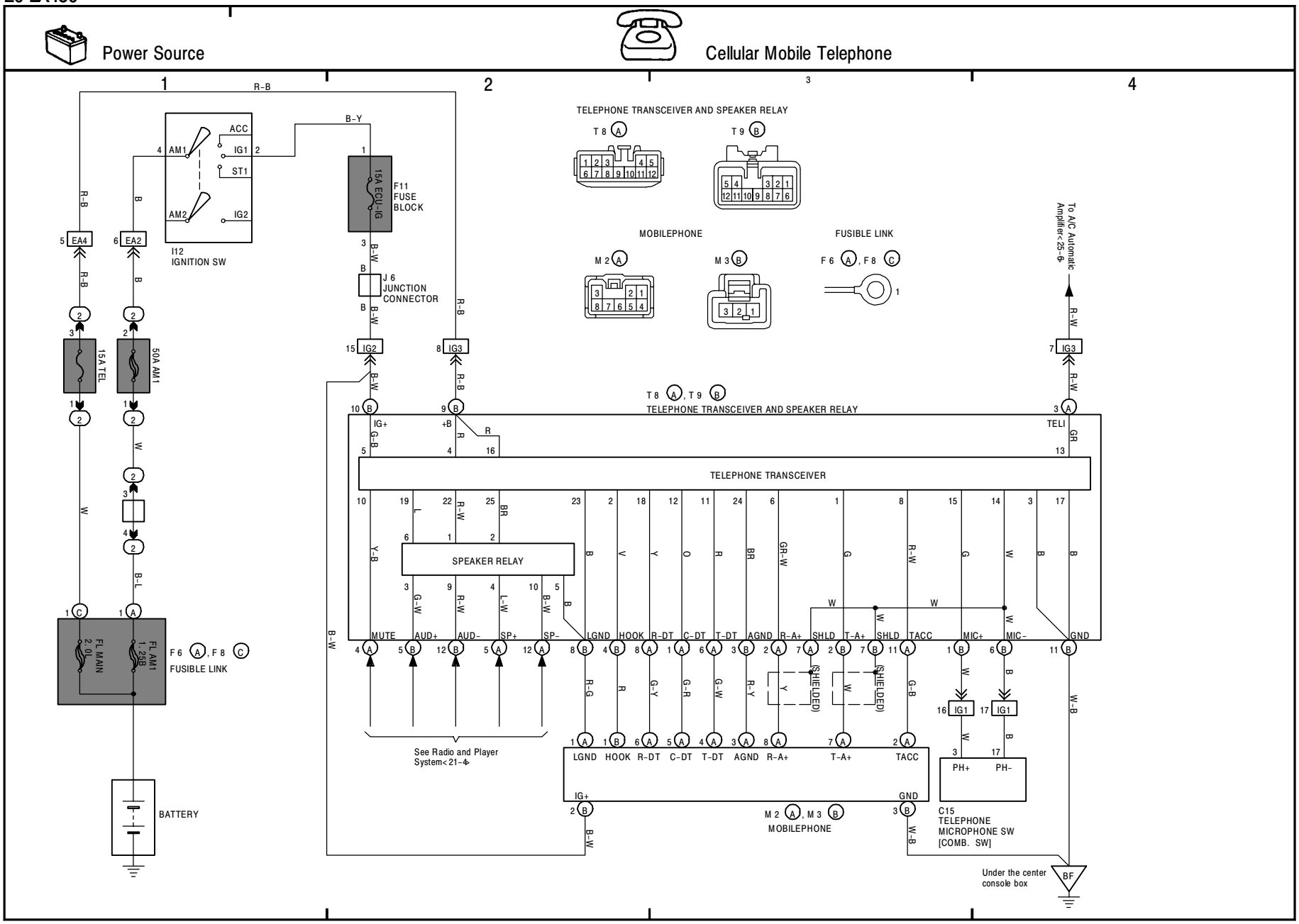
Power Source
Cellular Mobile Telephone
1
2
3
4
R-B
B-Y
ACC
IG1
ST1
AM1
AM2
IG2
I12
IGNITION SW
15A ECU-IG
F11
FUSE
BLOCK
J 6
JUNCTION
CONNECTOR
EA4
EA2
15A TEL
50A AM1
IG2
IG3
TELEPHONE TRANSCEIVER AND SPEAKER RELAY
T 8 A
T 9 B
MOBILEPHONE
M 2 A
M 3 B
FUSIBLE LINK
F 6 A, F 8 C
To A/C Automatic Amplifier<25-6>
TELEPHONE TRANSCEIVER
SPEAKER RELAY
IG+
+B
TELI
GND
MUTE
AUD+
AUD-
SP+
SP-
LGND
HOOK
R-DT
C-DT
T-DT
AGND
R-A+
SHLD
T-A+
TACC
MIC+
MIC-
(SHIELDED)
See Radio and Player System<21-4>
IG1
PH+
PH-
C15
TELEPHONE
MICROPHONE SW
[COMB. SW]
BATTERY
FL MAIN
2.0L
FL AM1
1.2/3B
Under the center console box
BF

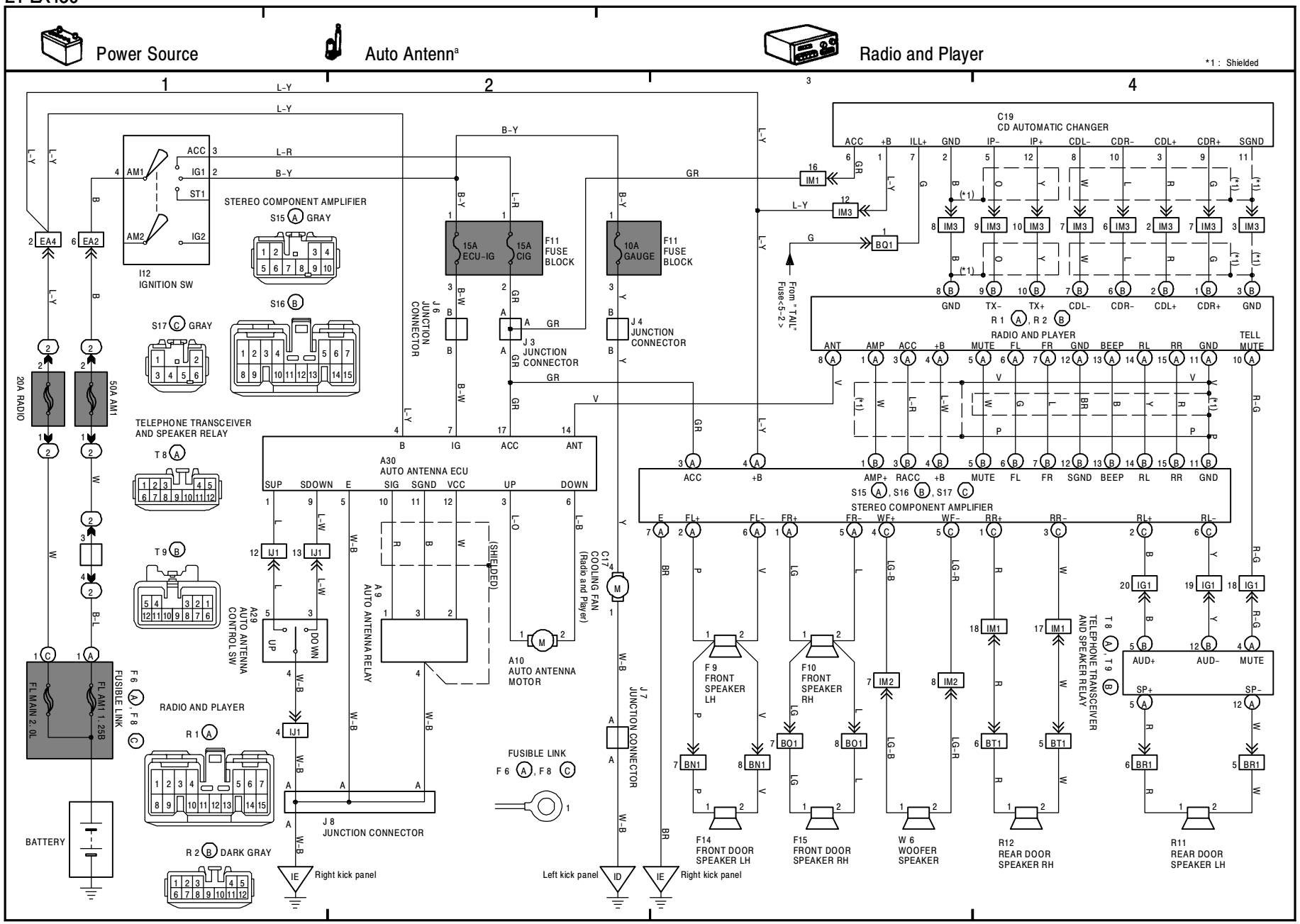
Power Source
Auto Antenna
Radio and Player
*1 : Shielded
1
2
3
4
C19
CD AUTOMATIC CHANGER
ACC +B ILL+ GND IP- IP+ CDL- CDR- CDL+ CDR+ SGND
GND TX- TX+ CDL- CDR- CDL+ CDR+ GND
R 1 (A), R 2 (B)
RADIO AND PLAYER
ANT AMP ACC +B MUTE FL FR GND BEEP RL RR GND TELL MUTE
ACC +B AMP+ RACC +B MUTE FL FR SGND BEEP RL RR GND
S15 (A), S16 (B), S17 (C)
STEREO COMPONENT AMPLIFIER
E FL+ FL- FR+ FR- WF+ WF- RR+ RR- RL+ RL-
AUD+ AUD- MUTE
SP+ SP-
T 8 (A), T 9 (B)
TELEPHONE TRANSCEIVER AND SPEAKER RELAY
From "TAIL" Fuse<5-2>
F11 FUSE BLOCK
15A ECU-IG
15A CIG
10A GAUGE
J 3 JUNCTION CONNECTOR
J 4 JUNCTION CONNECTOR
J 6 JUNCTION CONNECTOR
J 7 JUNCTION CONNECTOR
J 8 JUNCTION CONNECTOR
STEREO COMPONENT AMPLIFIER
S15 (A) GRAY
S16 (B)
S17 (C) GRAY
I12 IGNITION SW
AM1 AM2 ACC IG1 ST1 IG2
TELEPHONE TRANSCEIVER AND SPEAKER RELAY
T 8 (A)
T 9 (B)
A30 AUTO ANTENNA ECU
SUP SDOWN E SIG SGND VCC UP DOWN
B IG ACC ANT
A29 AUTO ANTENNA CONTROL SW
UP DOWN
A 9 AUTO ANTENNA RELAY
(SHIELDED)
A10 AUTO ANTENNA MOTOR
C17 COOLING FAN (Radio and Player)
20A RADIO
50A AM1
FL MAIN 2.0L
FL AM1 1.25B
FUSIBLE LINK
F 6 (A), F 8 (C)
RADIO AND PLAYER
R 1 (A)
R 2 (B) DARK GRAY
BATTERY
Right kick panel
Left kick panel
Right kick panel
F 9 FRONT SPEAKER LH
F10 FRONT SPEAKER RH
F14 FRONT DOOR SPEAKER LH
F15 FRONT DOOR SPEAKER RH
W 6 WOOFER SPEAKER
R12 REAR DOOR SPEAKER RH
R11 REAR DOOR SPEAKER LH

K

22 LX450

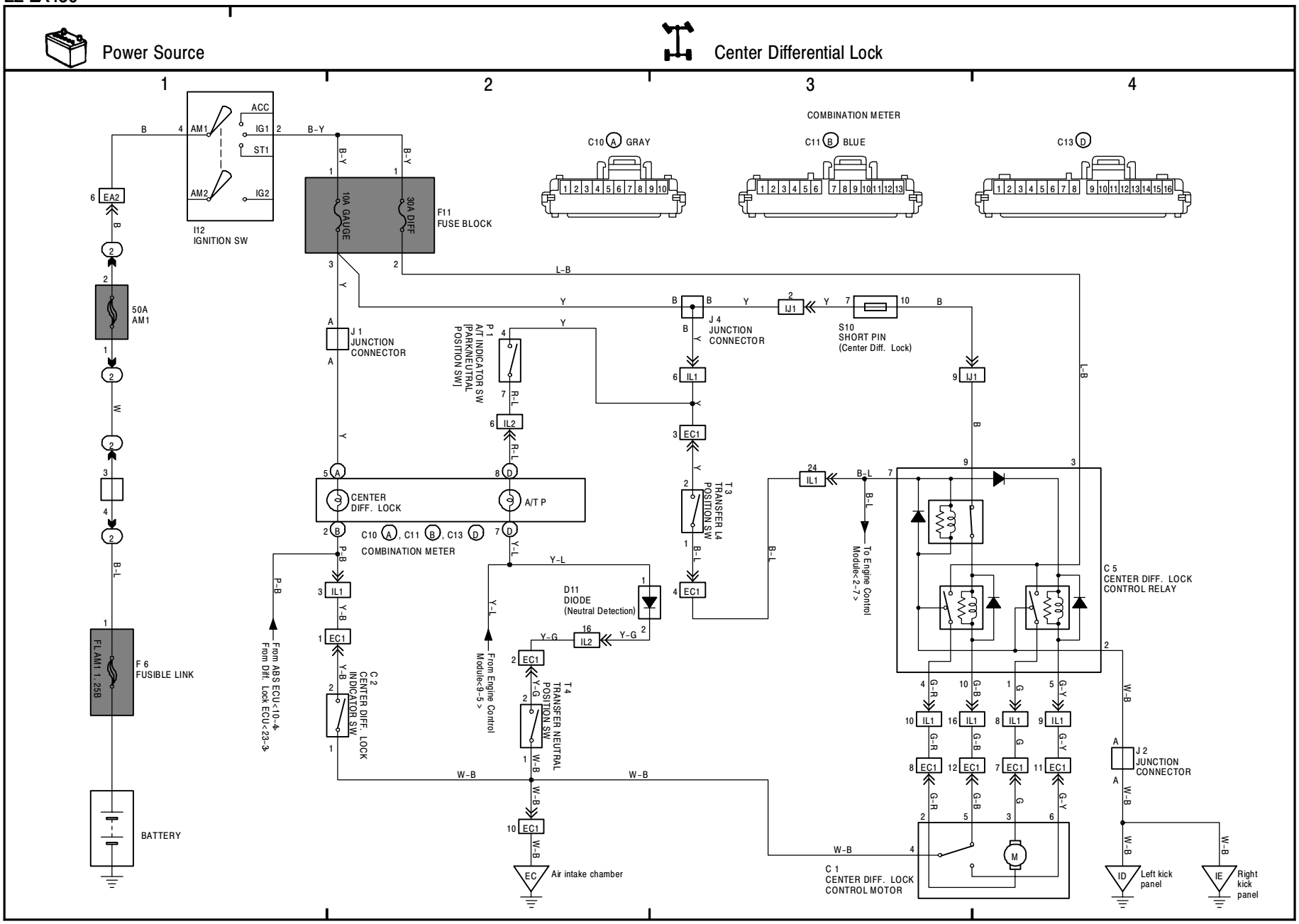
Power Source
Center Differential Lock
1
2
3
4
ACC
IG1
ST1
AM1
AM2
IG2
I12
IGNITION SW
EA2
50A
AM1
F 6
FUSIBLE LINK
FLAM1 1.25B
BATTERY
10A GAUGE
30A DIFF
F11
FUSE BLOCK
J 1
JUNCTION
CONNECTOR
P 1
A/T INDICATOR SW
[PARK/NEUTRAL
POSITION SW]
CENTER
DIFF. LOCK
A/T P
C10 A, C11 B, C13 D
COMBINATION METER
C 2
CENTER DIFF. LOCK
INDICATOR SW
From ABS ECU<10-4>
From Diff. Lock ECU<23-3>
From Engine Control
Module<9-5>
T 4
TRANSFER NEUTRAL
POSITION SW
D11
DIODE
(Neutral Detection)
EC
Air intake chamber
COMBINATION METER
C10 A GRAY
C11 B BLUE
C13 D
J 4
JUNCTION
CONNECTOR
S10
SHORT PIN
(Center Diff. Lock)
T 3
TRANSFER L4
POSITION SW
To Engine Control
Module<2-7>
C 5
CENTER DIFF. LOCK
CONTROL RELAY
C 1
CENTER DIFF. LOCK
CONTROL MOTOR
J 2
JUNCTION
CONNECTOR
ID
Left kick
panel
IE
Right
kick
panel

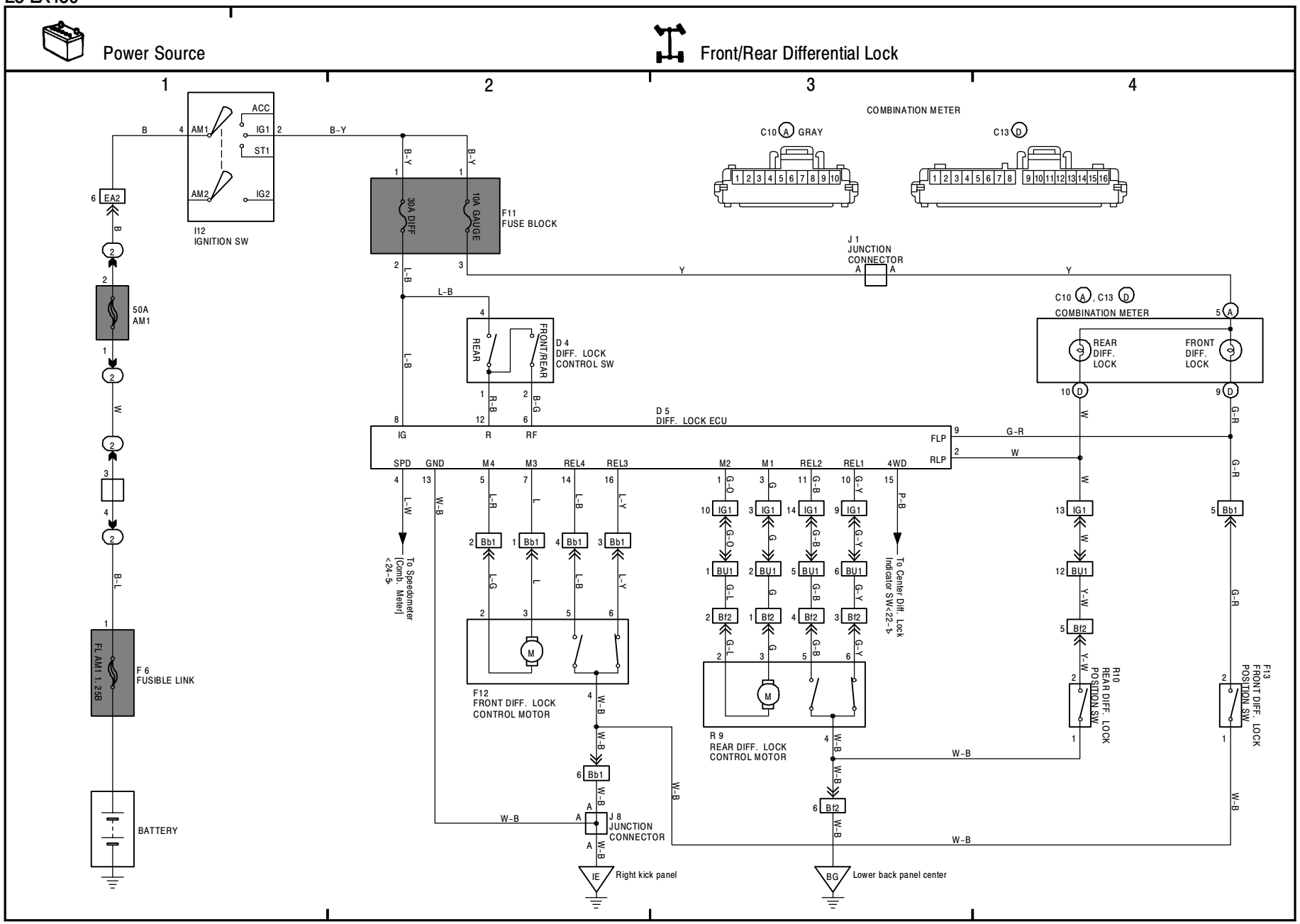
Power Source
Front/Rear Differential Lock
1
2
3
4
COMBINATION METER
C10 A GRAY
C13 D
ACC
IG1
ST1
AM1
AM2
IG2
I12
IGNITION SW
EA2
50A
AM1
F 6
FUSIBLE LINK
FL AM1 1.25B
BATTERY
F11
FUSE BLOCK
30A DIFF
10A GAUGE
J 1
JUNCTION
CONNECTOR
D 4
DIFF. LOCK
CONTROL SW
REAR
FRONT/REAR
C10 A, C13 D
COMBINATION METER
REAR
DIFF.
LOCK
FRONT
DIFF.
LOCK
D 5
DIFF. LOCK ECU
IG
R
RF
FLP
RLP
SPD
GND
M4
M3
REL4
REL3
M2
M1
REL2
REL1
4WD
To Speedometer
[Comb. Meter]
<24-5>
To Center Diff. Lock
Indicator SW<22-1>
F12
FRONT DIFF. LOCK
CONTROL MOTOR
R 9
REAR DIFF. LOCK
CONTROL MOTOR
R10
REAR DIFF. LOCK
POSITION SW
F13
FRONT DIFF. LOCK
POSITION SW
J 8
JUNCTION
CONNECTOR
IE
Right kick panel
BG
Lower back panel center

K

24 LX450

(Cont. next page)

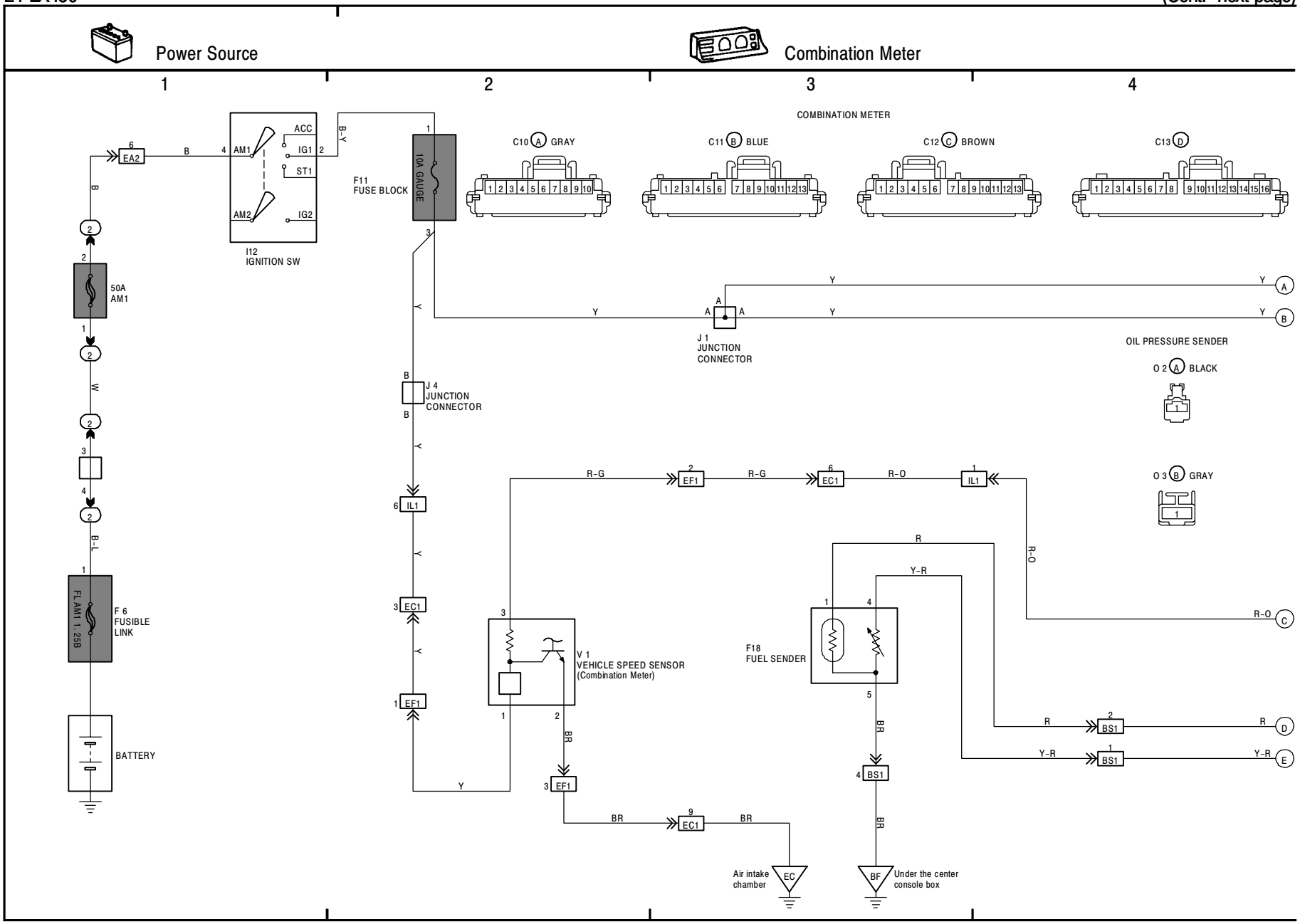

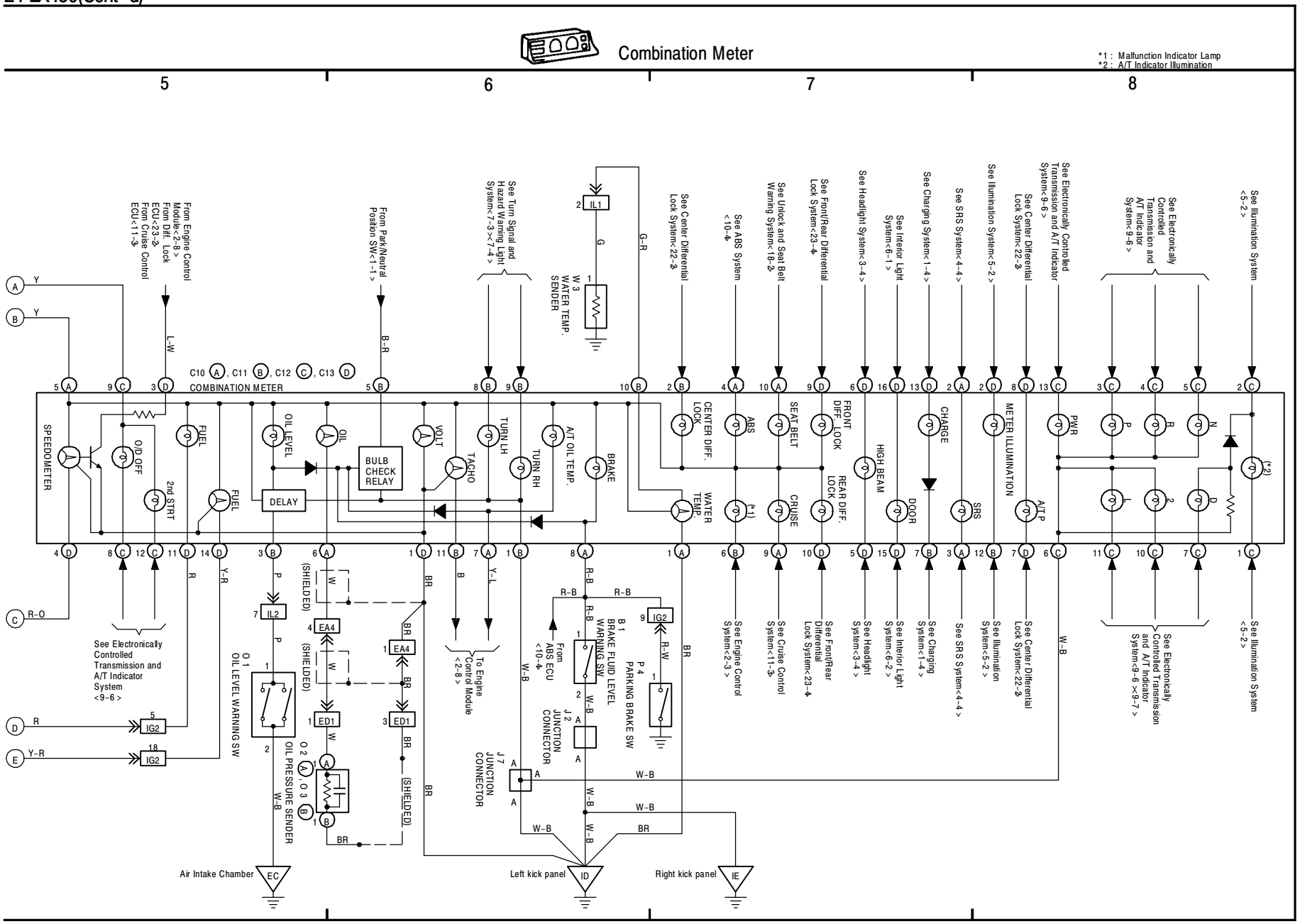
Combination Meter
*1 : Malfunction Indicator Lamp
*2 : A/T Indicator Illumination
5
6
7
8
See Illumination System <5-2>
See Electronically Controlled Transmission and A/T Indicator System<9-6>
See Center Differential Lock System<22-2>
See Electronically Controlled Transmission and A/T Indicator System<9-6>
See Illumination System<5-2>
See SRS System<4-4>
See Charging System<1-4>
See Interior Light System<6-1>
See Headlight System<3-4>
See Front/Rear Differential Lock System<23-4>
See Unlock and Seat Belt Warning System<18-2>
See ABS System <10-4>
See Center Differential Lock System<22-2>
See Turn Signal and Hazard Warning Light System<7-3><7-4>
From Park/Neutral Position SW<1-1>
From Engine Control Module<2-8>
From Diff. Lock ECU<23-2>
From Cruise Control ECU<11-3>
W 3 WATER TEMP. SENDER
IL1
G
G-R
B-R
L-W
Y
C10 A, C11 B, C12 C, C13 D
COMBINATION METER
SPEEDOMETER
O/D OFF
2nd STRT
FUEL
OIL LEVEL
OIL
VOLT
TACHO
TURN LH
TURN RH
A/T OIL TEMP.
BRAKE
CENTER DIFF. LOCK
WATER TEMP.
ABS
SEAT BELT
CRUISE
FRONT DIFF. LOCK
REAR DIFF. LOCK
HIGH BEAM
DOOR
CHARGE
SRS
METER ILLUMINATION
A/T P
PWR
P
R
N
D
1
2
(*1)
(*2)
BULB CHECK RELAY
DELAY
R-O
R
Y-R
P
W
BR
B
Y-L
R-B
W-B
See Electronically Controlled Transmission and A/T Indicator System <9-6>
IG2
IL2
EA4
ED1
O 1 OIL LEVEL WARNING SW
O 2 , O 3
OIL PRESSURE SENDER
(SHIELDED)
To Engine Control Module <22-8>
From ABS ECU <10-4>
B 1 BRAKE FLUID LEVEL WARNING SW
J 2 JUNCTION CONNECTOR
J 7 JUNCTION CONNECTOR
P 4 PARKING BRAKE SW
See Engine Control System<2-3>
See Cruise Control System<11-3>
See Front/Rear Differential Lock System<23-4>
See Headlight System<3-4>
See Interior Light System<6-2>
See Charging System<1-4>
See SRS System<4-4>
See Illumination System<5-2>
See Center Differential Lock System<22-2>
See Electronically Controlled Transmission and A/T Indicator System<9-6><9-7>
See Illumination System <5-2>
Air Intake Chamber
EC
Left kick panel
ID
Right kick panel
IE

K

25 LX450

(Cont. next page)

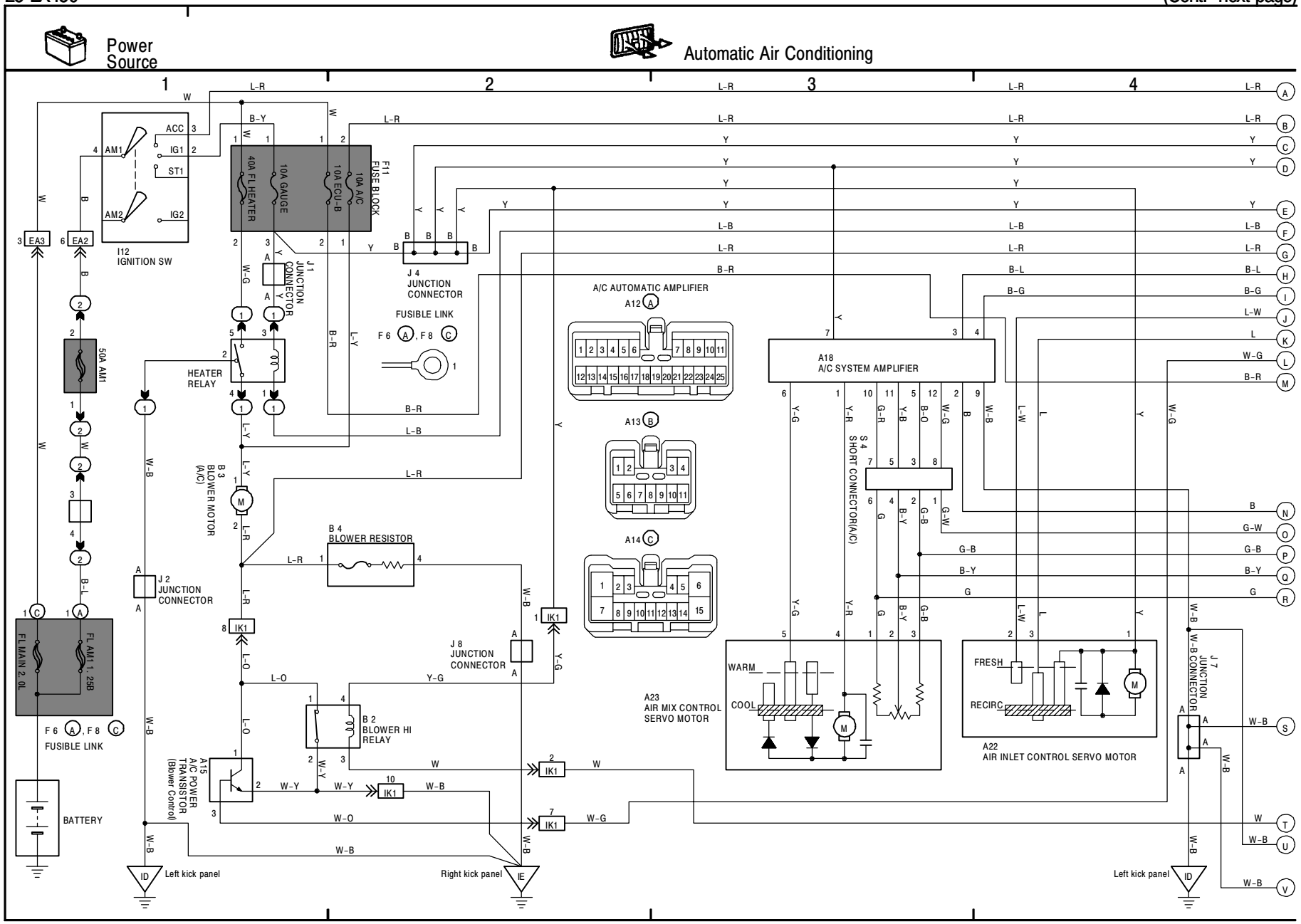

(Cont. next page)

Automatic Air Conditioning

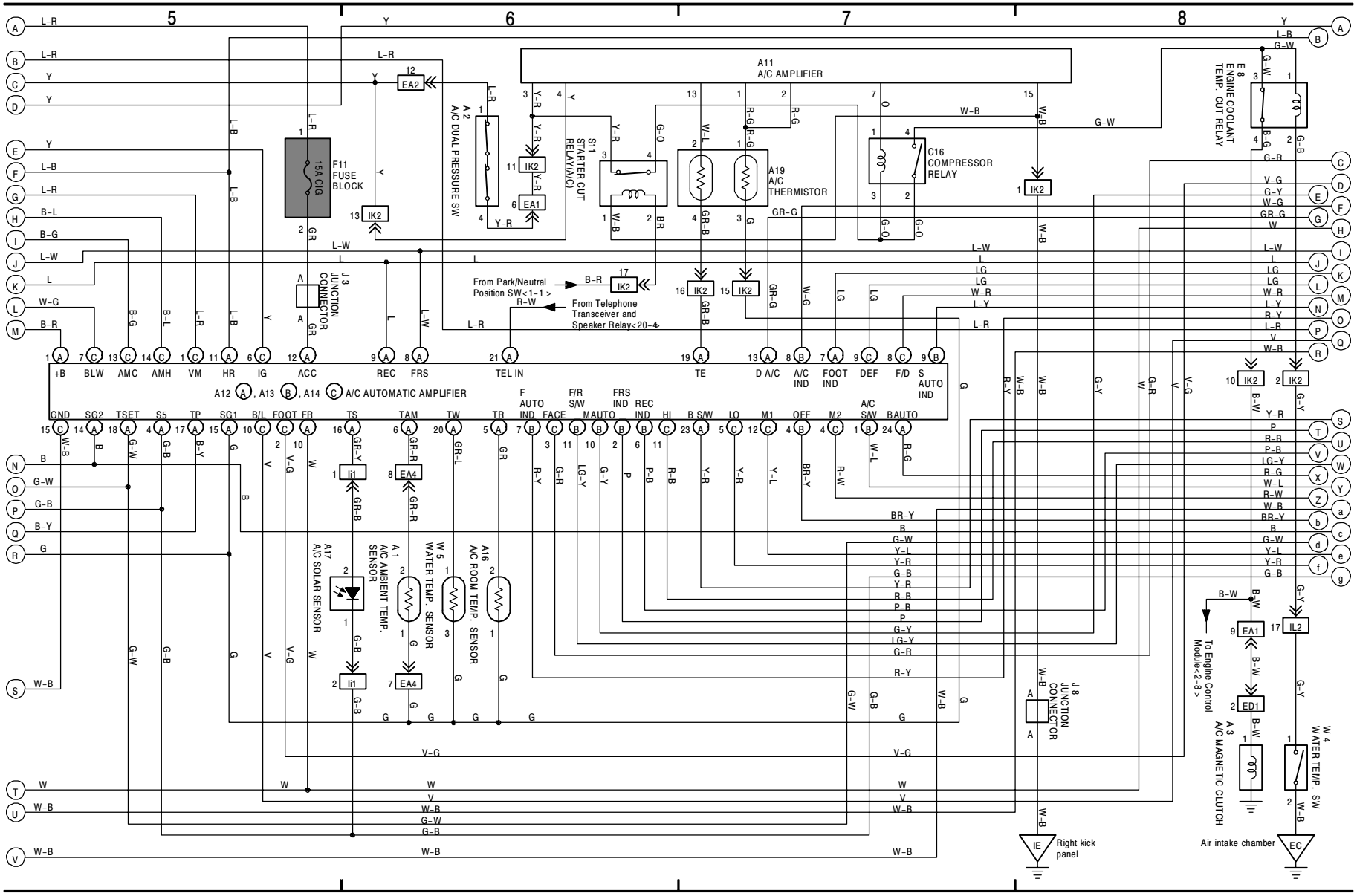

K

25 LX450(Cont' d)

Automatic Air Conditioning

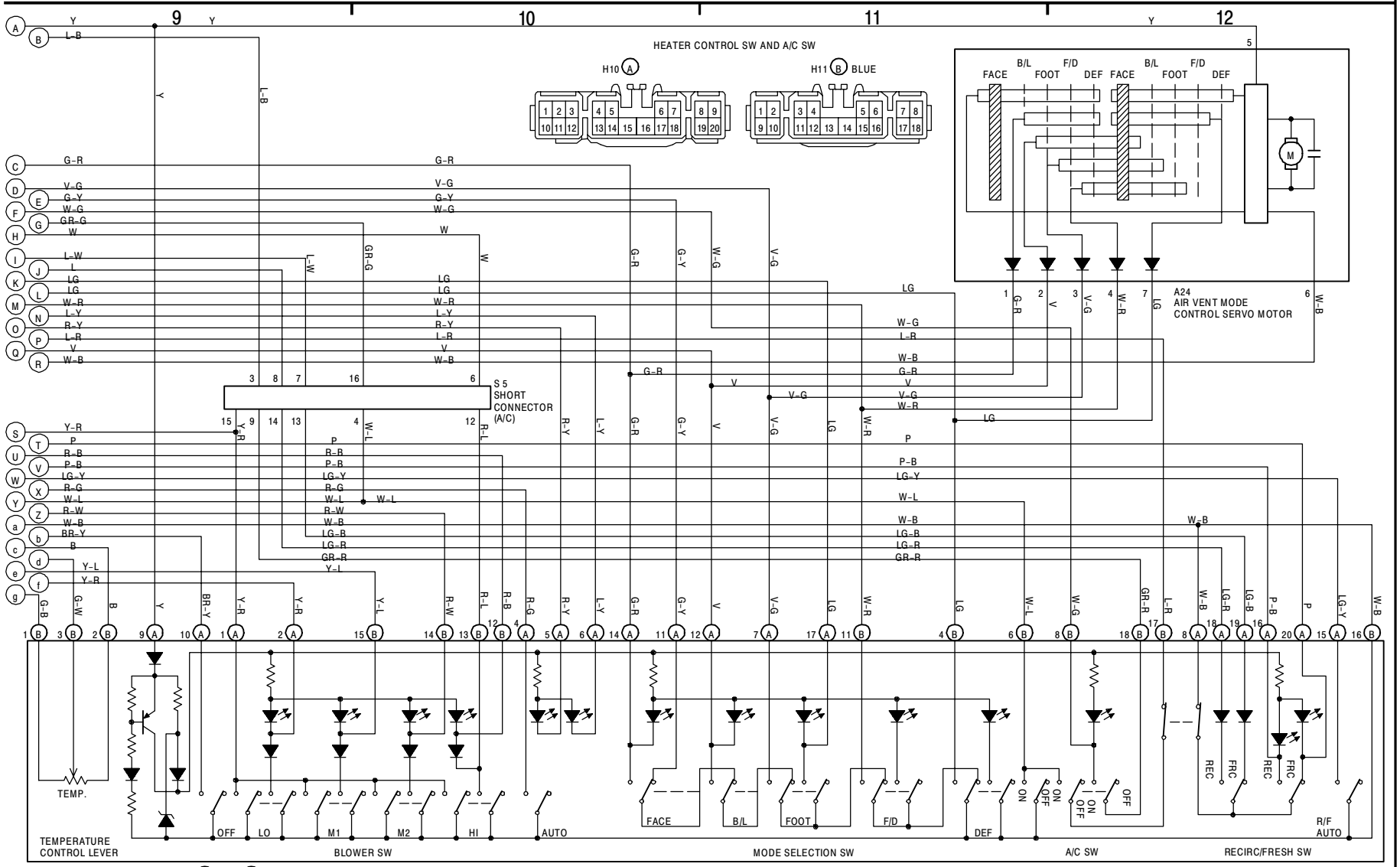

H10 A, H11 B
HEATER CONTROL SW AND A/C SW

FOREWORD

To assist you in your service activities, this manual explains the main characteristics of the LX450, in particular providing a technical explanation of the construction and operation of new mechanisms and new technology used.

Applicable models: FZJ80 series

This manual is divided into 4 sections.

1. **Introduction** — Development objectives of the new model and model line-up.
2. **New Model Outline** — Explanation of the product to give a general understanding of its features.
3. **Technical Description** — Technical explanation of the construction and operation of each new system and component.
4. **Appendix** — Major technical specifications of the vehicle.

CAUTION, NOTICE, *REFERENCE* and **NOTE** are used in the following ways:

CAUTION	A potentially hazardous situation which could result in injury to people may occur if instructions on what to do or not do are ignored.
NOTICE	Damage to the vehicle or components may occur if instructions on what to do or not do are ignored.
REFERENCE	Explains the theory behind mechanisms and techniques.
NOTE	Notes or comments not included under the above 3 titles.

For detailed service specifications and repair procedures, refer to the following Repair Manuals:

Manual Name	Pub. No.
• 1996 LEXUS LX450 Repair Manual	RM482U
• 1996 LEXUS LX450 Electrical Wiring Diagram	EWD270U

All information contained herein is the most up-to-date at the time of publication. We reserve the right to make changes without prior notice.

TOYOTA MOTOR CORPORATION

© **1995 TOYOTA MOTOR CORPORATION**
All rights reserved. This book may not be reproduced or copied, in whole or in part, without the written permission of Toyota Motor Corporation.

DEVELOPMENT OBJECTIVES

The major development objectives of the Lexus LX450 are as follows:

- Prestigious exterior styling and high quality interior design for Lexus brand.
- Excellent running performance and riding comfort.
- Excellent utility and equipments for various user needs.
- Superb quality, reliability and safety.

EXTERIOR APPEARANCE

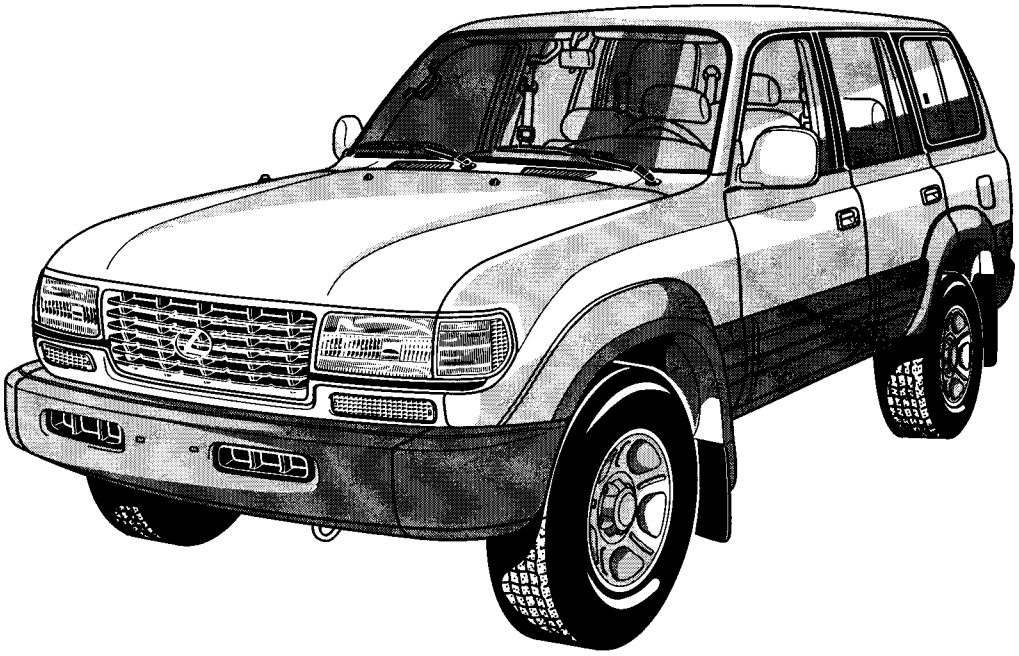

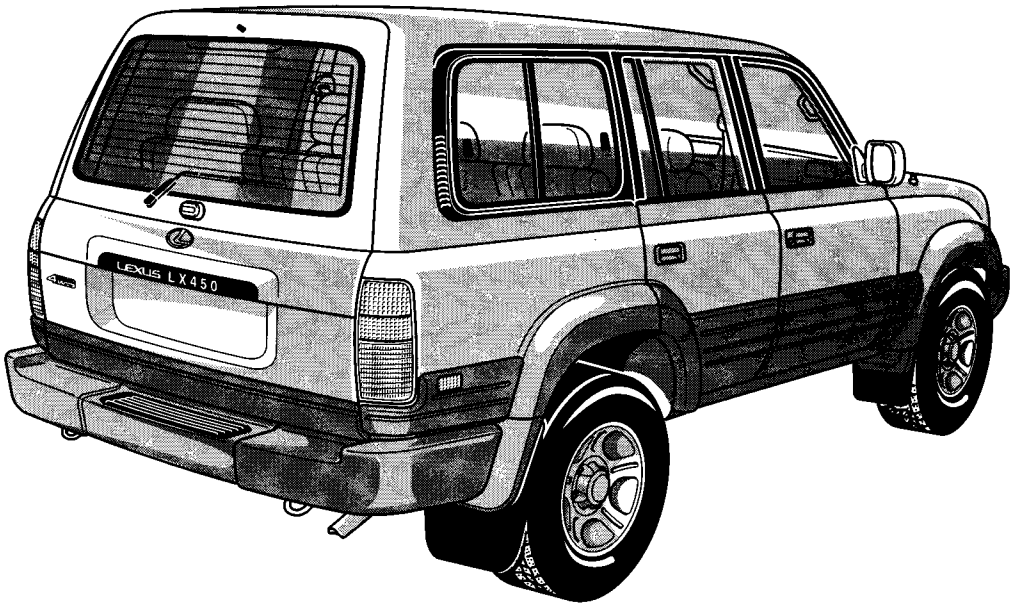

MODEL CODE AND MODEL LINE-UP

MODEL CODE

FZJ80 L - G N P G K A

① ② ③ ④ ⑤ ⑥ ⑦ ⑧

①	**BASIC MODEL CODE**
	FZJ80 : With 1FZ-FE Engine

②	**STEERING WHEEL POSITION**
	L : Left-Hand Drive

③	**BODY TYPE**
	G : Station Wagon

④	**BACK DOOR TYPE**
	N : Lift–Up Back Door

⑤	**GEARSHIFT TYPE**
	P : 4-Speed Automatic

⑥	**GRADE**
	G : —

⑦	**ENGINE SPECIFICATION**
	K : DOHC And SFI

⑧	**DESTINATION**
	A : U.S.A.

MODEL LINE-UP

TRANSMISSION					4-Speed Automatic
DESTINA-TION	ENGINE	BACK DOOR	GRADE	DRIVE TYPE (Transfer)	A343F
U.S.A.	1FZ–FE	Lift–Up	—	FULL–TIME 4WD (HF2AV)	FZJ80L–GNPGKA

MAJOR COMPONENTS

The basic components of the LX450 are as follows:

Item		Type and Specifications
Drive System		Full Time 4WD
Engine	Type	1FZ–FE: In–Line 6, 4.5–Liter
	Displacement cm^3 (cu. in.)	4477 (273.1)
	Valve Mechanism	24–Valve, DOHC
	Fuel System	SFI
	Max. Output [SAE–NET]	158 kW @ 4600 rpm (212 HP @ 4600 rpm)
	Max. Torque [SAE–NET]	373 N·m @ 3200 rpm (275 ft·lbf @ 3200 rpm)
Automatic Transmission		A343F: 4–Speed (ECT)*
Transfer		2–Speed Full Time 4WD (HF2AV)
Brakes	Front	Ventilated Disc
	Rear	Ventilated Disc
Suspension	Front	Lead Arm Coil Spring
	Rear	4–Link Spring with Lateral Rod
Steering	Gear Type	Recirculating Ball
	Power Steering	Engine Revolution Sensing Type

*: Electronically Controlled Transmission

ENGINE

ENGINE

The 1FZ-FE engine adopted in the LX450 is a 4.5–liter, 6–cylinder, 24–valve, DOHC engine.

Engine	Displace-ment	Max. Output [SAE-NET]	Max. Torque [SAE-NET]	Features
1FZ-FE	4.5 ℓ	158 kW @ 4600 rpm (212 HP @ 4600 rpm)	373 N•m @ 3200 rpm (275 ft•lbf @ 3200 rpm)	This engine has high output and high fuel economy with low vibration and noise.

■ 1FZ-FE ENGINE

The 1FZ-FE engine is an in–line 6 cylinder, 4.5–liter, 24–valve DOHC engine. It is a high performance engine for the LX450 offering fuel economy, low vibration and low noise levels.

CHASSIS

To achieve high levels of both riding comfort and steering stability, 4–wheel coil suspension and full–time 4WD are used in the LX450. The LX450 has the maneuverability, durability and reliability required for dependable off–road driving while fulfilling normal passenger vehicle requirements.

MAJOR COMPONENTS

Steering

Engine revolution sensing type recirculating ball power steering is used.

Suspension

A leading arm coil spring with front lateral rod and a 4-links coil spring with rear lateral rod are used.

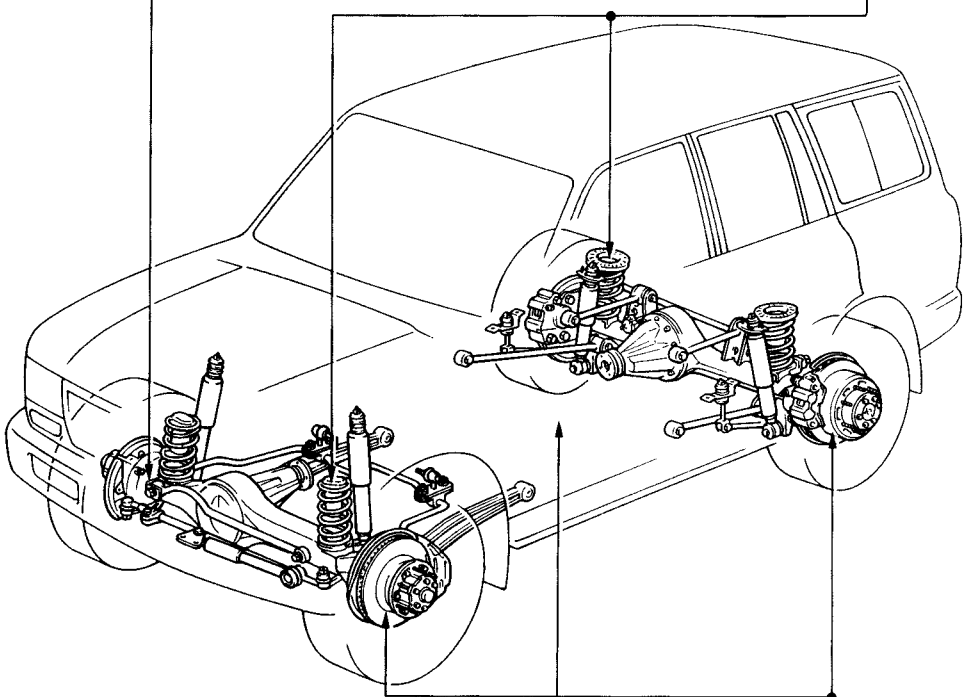

Transmission

4-Speed ECT (Electronically Controlled Transmission) A343F automatic transmission is used.

Brakes

- Ventilated disc brakes are used on all wheels and the brake booster is the 8" + 9" tandem type.
- The ABS is a standard equipment.

Transfer

A 2-speed transfer with built-in bevel gear type center differential is used for full-time 4WD. The center differential is equipped with a viscous coupling LSD (Limited Slip Differential).

Differential

The differential lock mechanism for the front and rear differentials is available as an option.

BODY

The body is made lightweight and highly rigid through the optimized allocation of materials and application of high-strength sheet steel, etc.

Furthermore, anti-corrosion sheet steel is widely adopted to provide excellent corrosion resistance.

▶ Highly Rigid Body ◀

: High Strength Sheet Steel

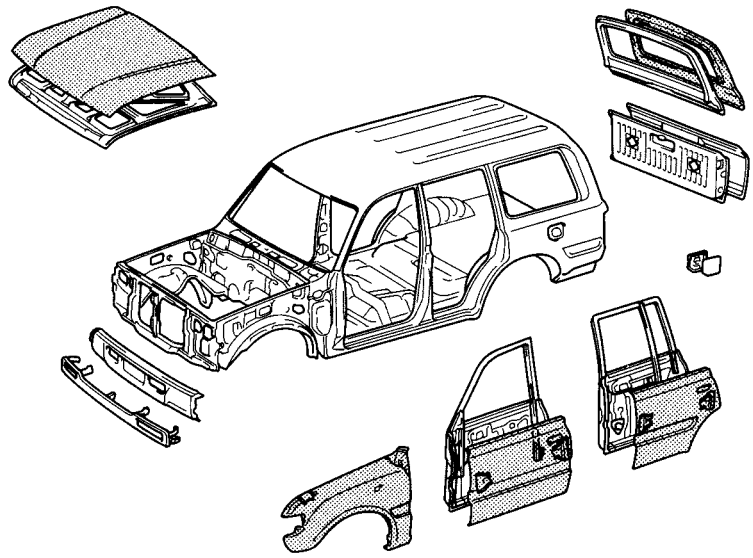

▶ Rust–Resistant Body ◀

: Zinc-Iron Alloy Double Layer Galvannealed Sheet Steel

: Galvannealed Sheet Steel

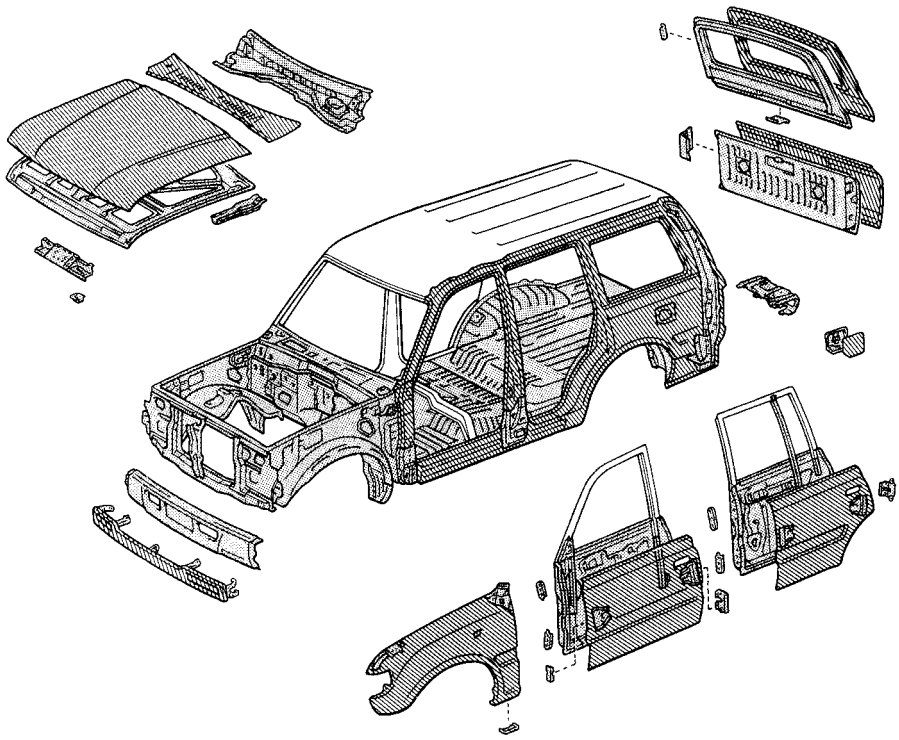

EXTERIOR

STYLING

The LX450 has a refined and elegant styling appropriate to a prestige 4WD wagon.

- Bold, vigorous curved surfaces
- Cross–section with a sense of stability and drive.

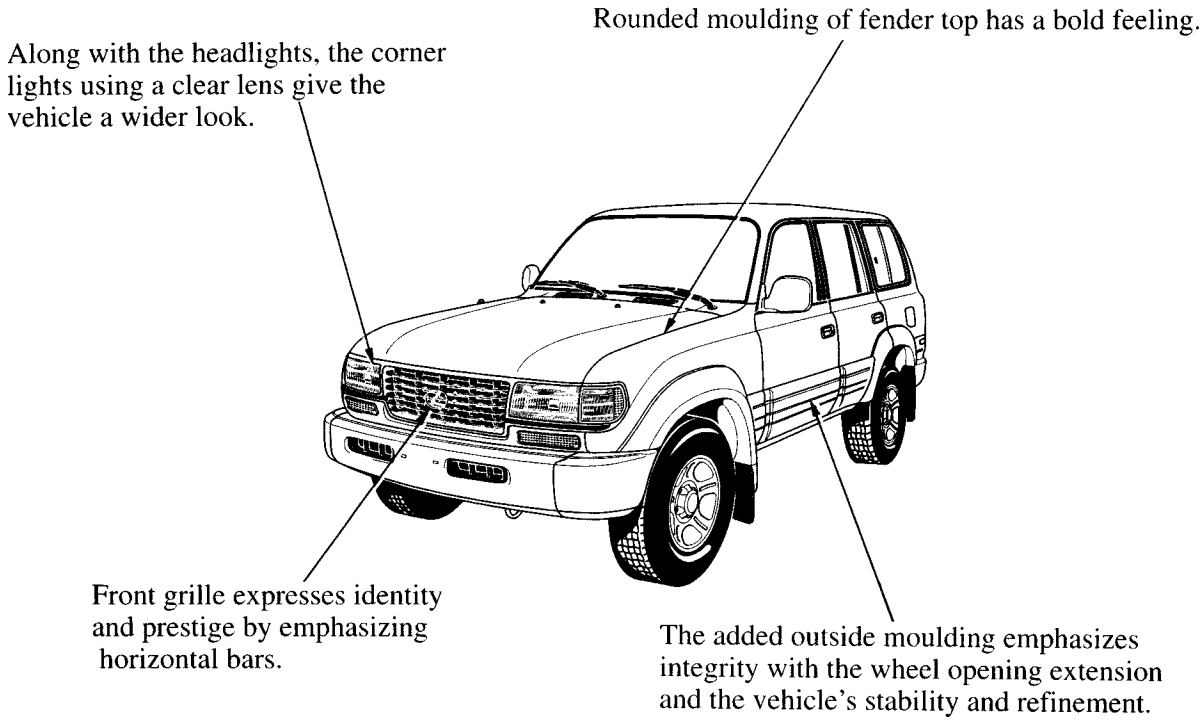

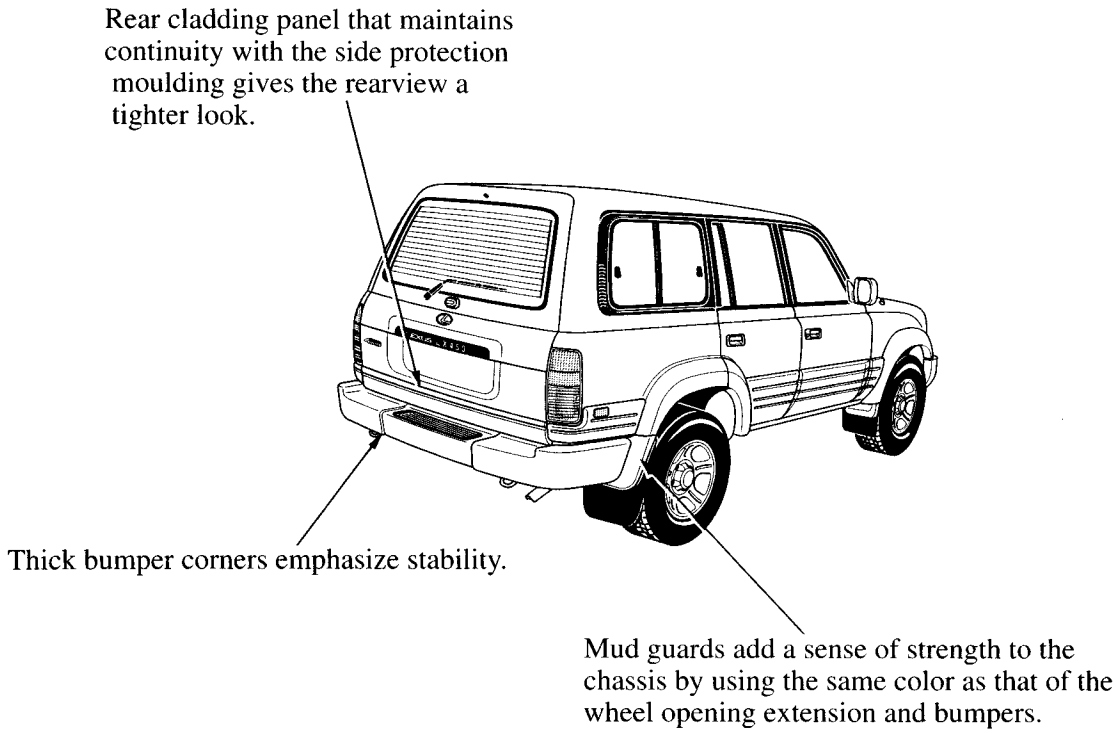

EXTERIOR

EXTERIOR EQUIPMENT

■ BUMPER

- Large bumpers which extend well around the sides of the vehicle are used.
- On the front bumper, bumper grilles are provided for the air inlets for an enhanced appearance.
- Both front and rear bumpers are painted with the same color as that of the side protection mouldings, thus providing a two–tone color combination with the color of the vehicle's exterior panels.

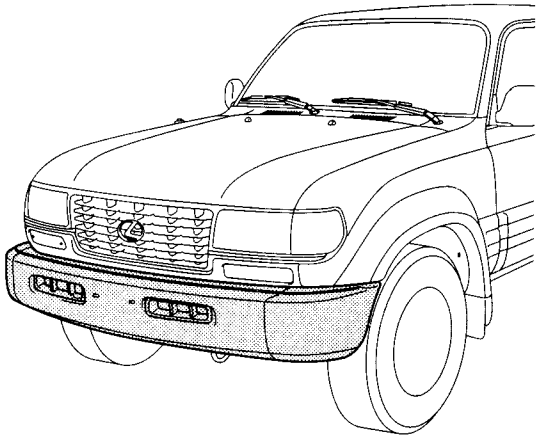

Front

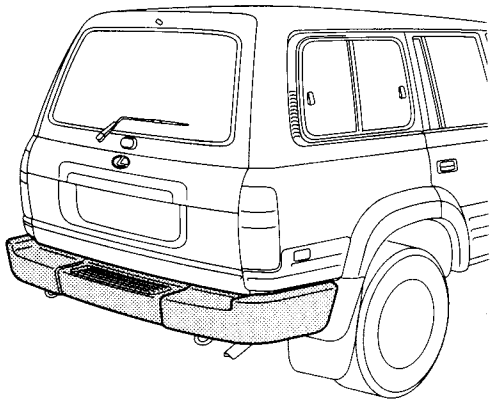

Rear

■ LIGHTS

1. Front Light

- The large, uniquely designed halogen headlights have been adopted to provide excellent night–time visibility.
- A clear lens is used on the parking lights to emphasize integrity with the headlights.
- A light auto turn–off system is standard equipment.

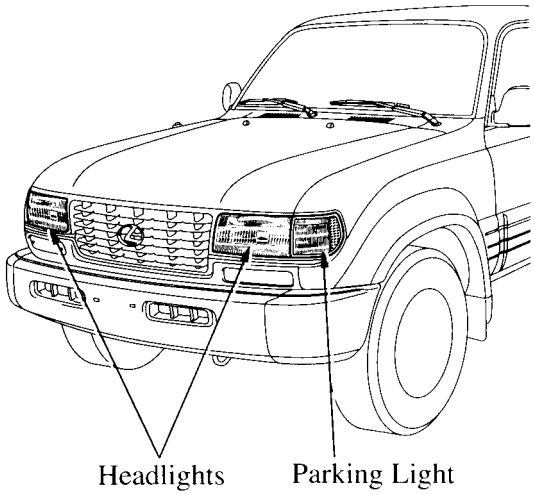

EXTERIOR

2. Rear Light

The high–mounted stoplight, located in the middle of the back door, is standard equipment.

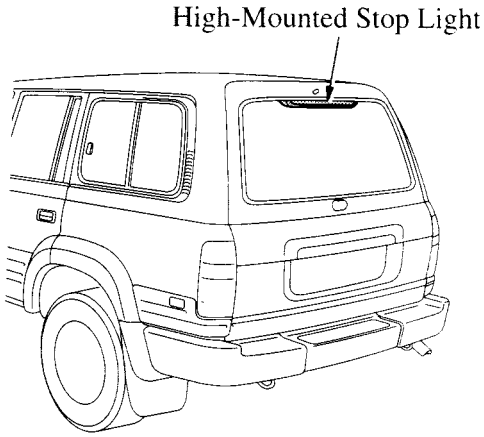

■ OUTSIDE REAR VIEW MIRROR

- A large outside rear view mirror matching the body shape is used.
- An electrical remote control mirror is standard equipment.

■ MOON ROOF

A power tilt–up and sliding moon roof which provides goods ventilation and exhilarating open air driving is optional equipment. In the interior of the vehicle, there is a slidable sun shade to reduce glare during daylight hours.

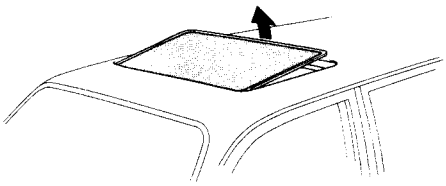

Tilt

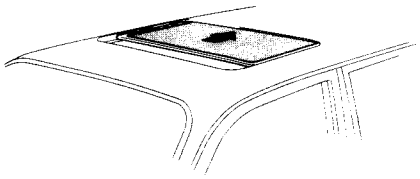

Sliding

■ OUTSIDE MOULDING AND WHEEL OPENING EXTENSION

Outside mouldings and wheel opening extension are standard equipment.

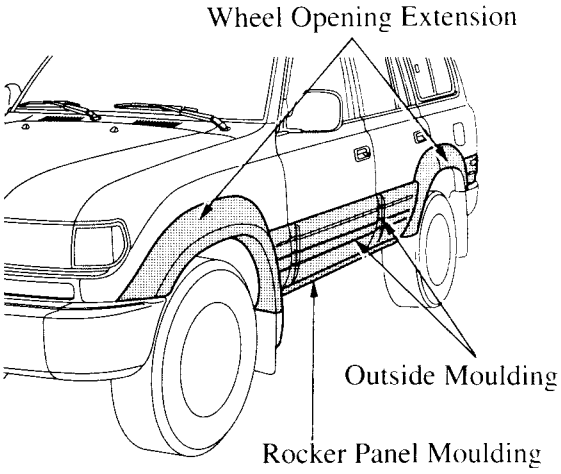

INTERIOR

As Lexus's prestige 4WD wagon, the LX450 has been given a bold, high–quality multi–purpose cabin.

CABIN

- Passenger car–like large instrument panel with generously curved moulding.
- Easy–to–use, logically–positioned meters and switches.
- Each seat optimally positioned and luggage room expanded.
- Thick, substantial seats with good holding characteristics.
- Integration and increased size of trim produces a high quality feeling and a feeling of solid spaciousness.
- Increased comfort from the well–equipped air conditioning system and audio system.

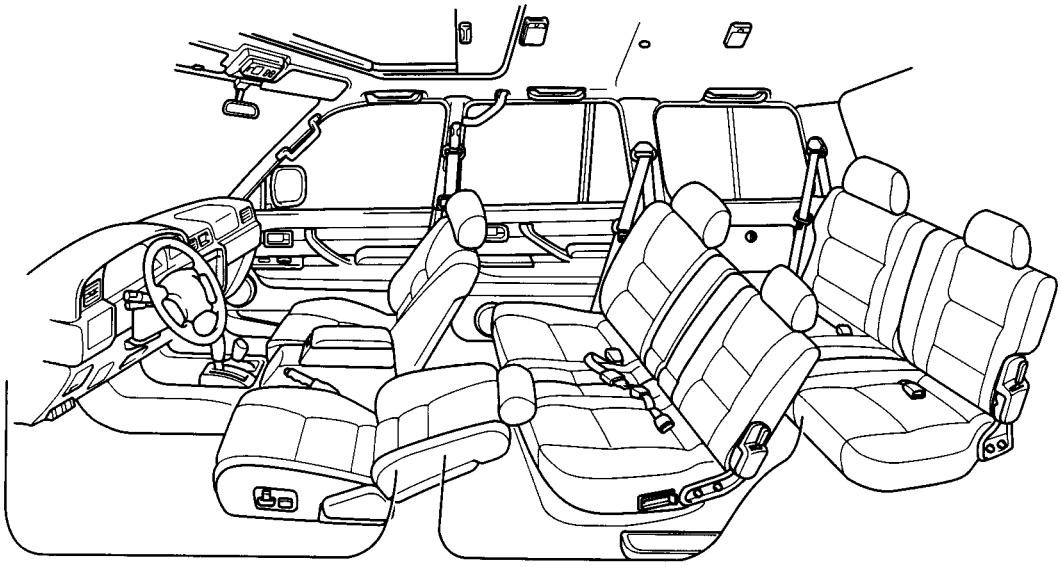

INTERIOR

■ SEATS

In addition to providing optimal performance and riding comfort, the seats offer a luxurious feeling through the application of selected soft–touch genuine leather with a carefree design.

1. Front Seat

Power seats are standard equipment for the front seats. These seats include the following adjustment controls.

Seat / Adjustment Functions		Driver's	Passen-ger's
①	Fore-and-aft sliding	●	●
②	Front vertical	●	●
③	Rear vertical	●	●
④	Reclining	●	●
⑤	Lumber support	●	–
⑥	Side support	○	–
⑦	Headrest height	○	○
⑧	Headrest fore-and-aft	○	○

●: Power, ○: Manual

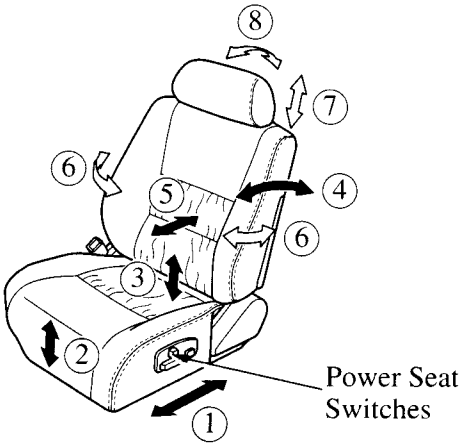

Driver's Seat

2. Rear Seats

- The rear seat configuration includes fixed type separate seats as the No. 1 rear seat and removable type forward–facing seats as the No. 2 rear seat.

- For the No. 1 rear seat, the seat back and seat cushion can be folded forward for effective use of the rear space.

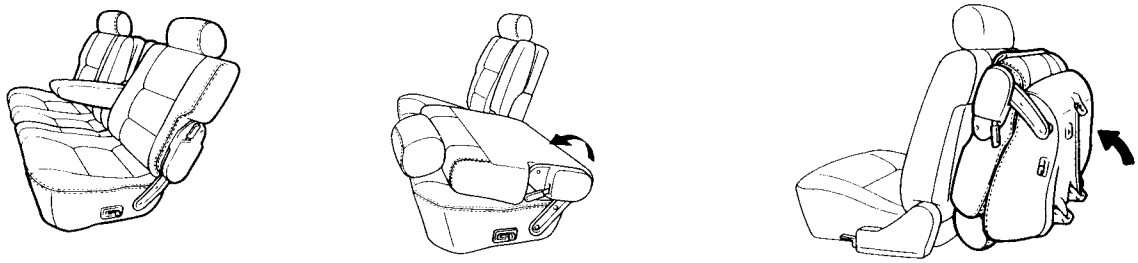

- No. 1 rear seat includes independent center armrests for both the left and right seats.

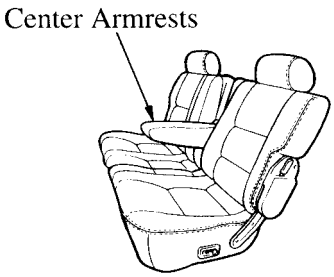

INTERIOR

- No. 2 rear seat is foldable for effective use of interior space. It can also be removed to provide a wide luggage space.

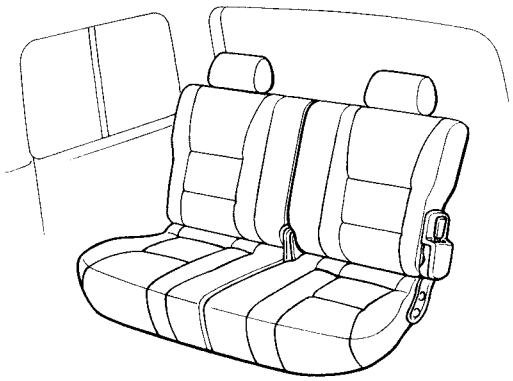

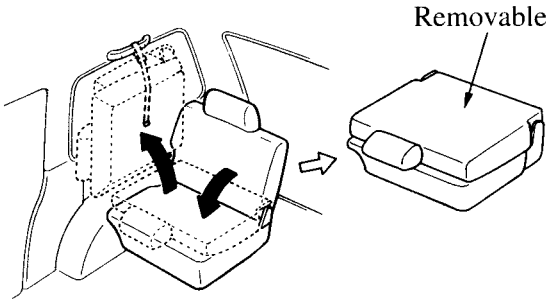

■ SEAT BELTS

1. Front Seat Belt

- The front seats are provided with the 3–point ELR (Emergency Locking Retractor) seat belts. The passenger seat is additionally provided with an ALR (Auto–Locking Retractor) mechanism.
- An adjustable shoulder belt anchor is provided for the front seat. It can be adjusted up and down to fit the physique of the seat occupant.
- The front seat belt inner buckle is attached to the seat adjuster. The buckle moves with the seat itself.

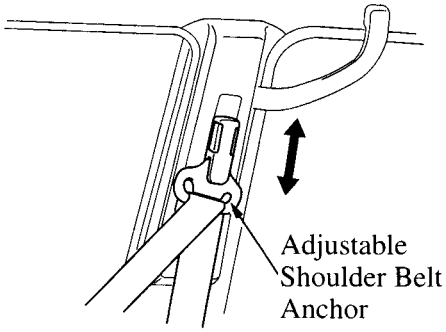

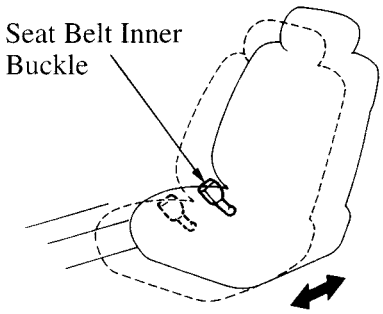

2. Rear Seat Belt

On the outer seat of the No. 1 and No. 2 rear seats, 3–points ELR with and ALR mechanism seat belts are provided as standard equipment. The center position of the No. 1 rear seat uses a 2–point NR (Non–Retractor) seat belt.

INTERIOR

■ DOOR TRIM

- The power window switch housings for the front and rear doors are designed with a wood–grain finish. Also, a wood–grain ornament is provided at the top of the armrest. As a result, then interior offers a more elegant appearance.

- Door grips with a good fit have adopted. Also, the power window switches make it easy to use by locating them in an easily accessible area.

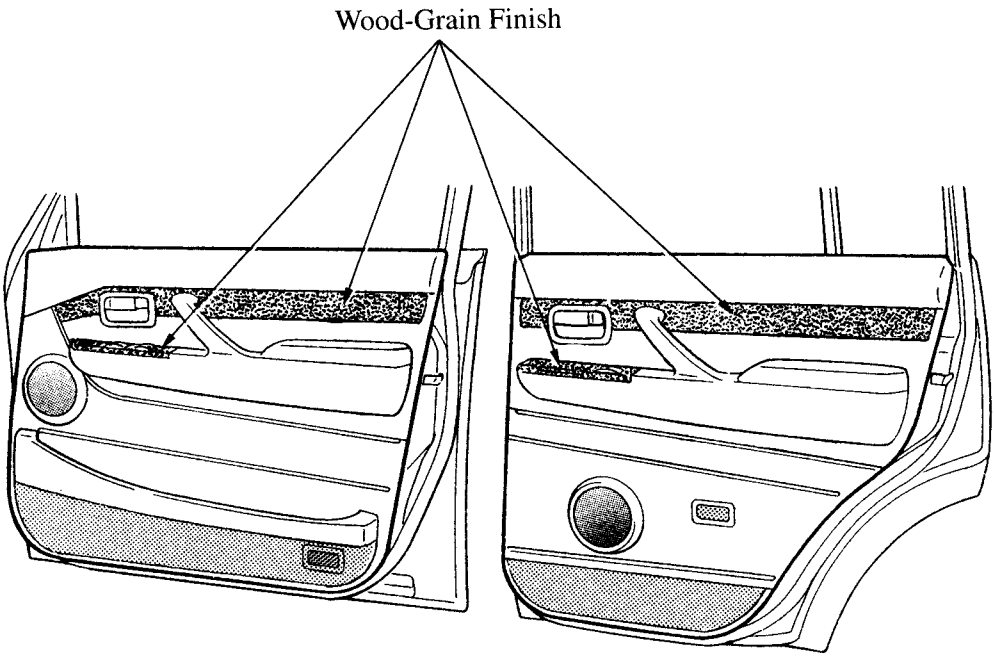

INTERIOR

INSTRUMENT PANEL, SWITCH LAYOUT AND EQUIPMENT

The instrument panel has a dynamic form and elegance appropriate to a prestige Lexus 4WD wagon. The two–tone interior and walnut–paneled front console add a luxurious touch, while all functional components and switches are sensibly laid out for excellent visibility and control.

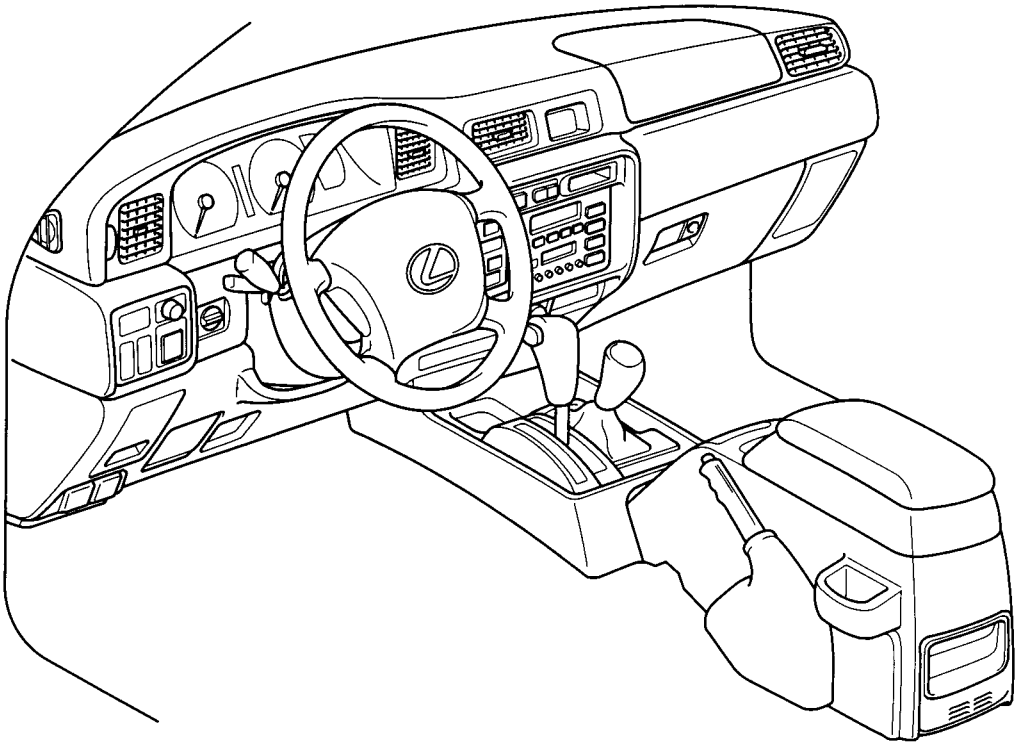

INTERIOR

■ COMBINATION METER

An electronic speedometer is used in the large twin–eye analog combination meters. The warning and indicating lights are grouped at the bottom of the gauge for better visibility.

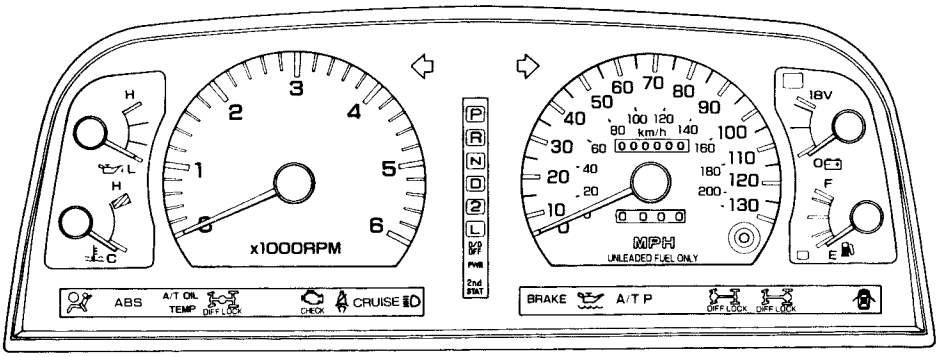

■ IGNITION KEY

- The ignition switch is located on the instrument panel for easy use.
- The key is the inner groove type, which is hard to duplicate.

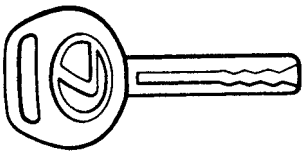

Ignition Key

- A card holder type flat key is provided for convenient portability.

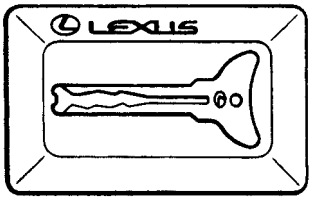

Flat Key

■ SHIFT LOCK SYSTEM

To minimize the possibility of incorrect operation of automatic transmissions, a shift lock system is incorporated. Unless the driver is depressing the brake pedal, it prevents the shift lever shifting from “P” to other ranges. A key interlock device is also incorporated. The ignition key cannot be removed unless the shift lever is set in “P” range.

INTERIOR

■ AIR CONDITIONING

- An ECU controlled fully automatic air conditioning system which has sufficient heating and cooling capacity is used.
- The control panel is an easy-to-use push button type panel.
- A defroster–linked air conditioning startup control is used to automatically engage the air conditioning when the defroster mode has been selected.

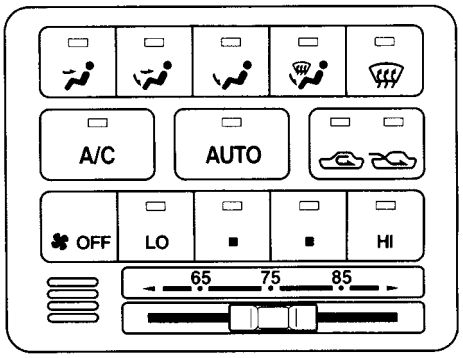

Control Panel

■ AUDIO SYSTEM

- An AM/FM multiplex ETR (Electronic Turning Radio) with cassette deck is standard, and a CD (Compact Disc) player with an automatic changer is an option. This CD auto changer is built into the rear console box and accommodates 6 discs at the same time.
- A 7-speaker system provides high quality sound across all ranges.
- A display which indicates radio, cassette, and CD operation conditions is located in the top of the audio control panel for easier monitoring and adjustment.
- The antenna can be regulated to a desired height by operating the power antenna switch located in the upper center of the instrument panel.

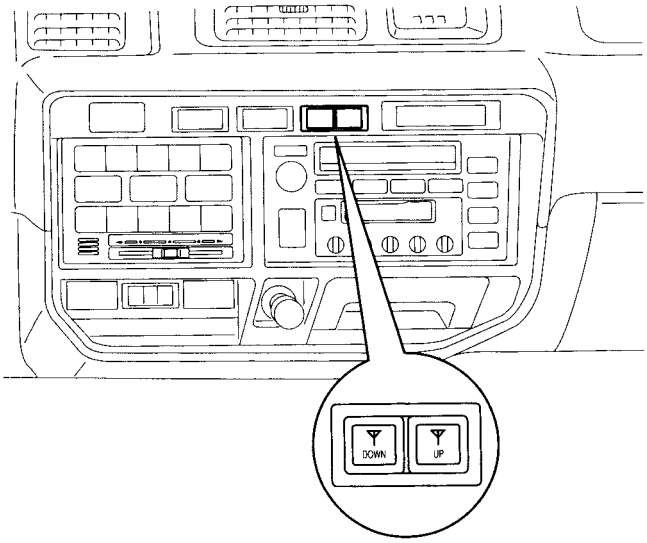

Power Antenna Switch

INTERIOR

▶ Layout of Audio System ◀

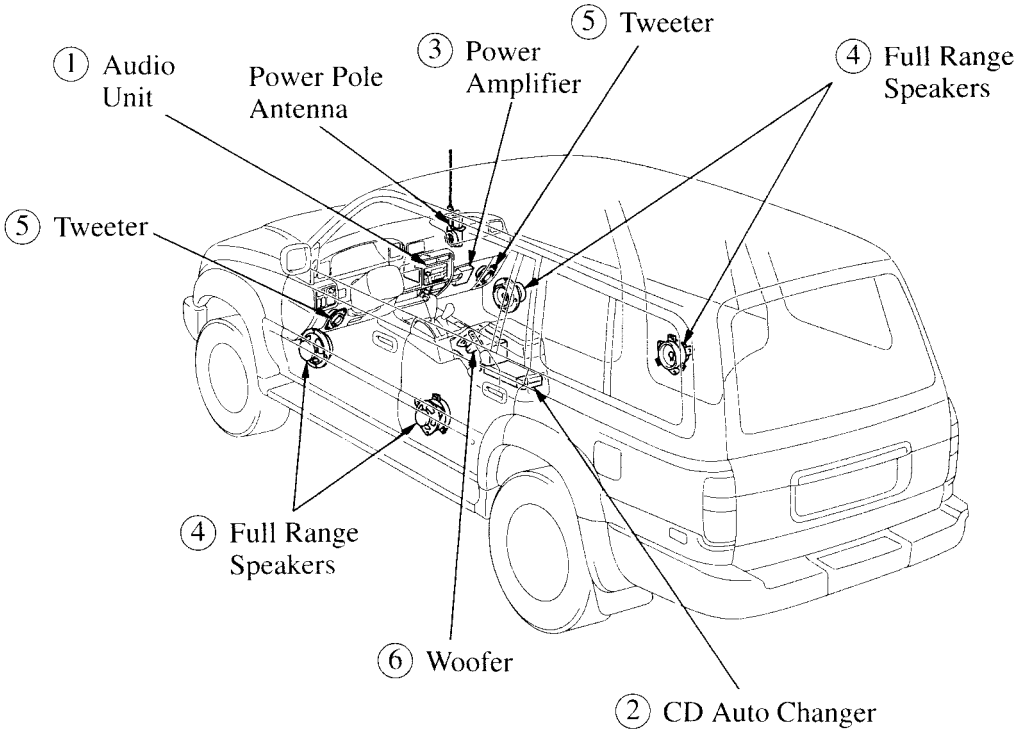

▶ Specifications ◀

Components	Specifications
1. Audio Unit	● AM/FM ETR with Cassette Deck and CD Auto Changer (OPT) ● Separate Power Amplifier ● Make: Pioneer
2. CD Auto Changer	● Takes up to 6 Compact Discs. ● Use 12 cm (4.7 in.) discs only. ● Make: Pioneer
3. Power Amplifier	● 35W (Max.) x 2 Channel (For Front Speakers) ● 35W (Max.) x 2 Channel (For Rear Speakers) ● 55W (Max.) x 1 Channel (For Woofer)
4. Full Range Speaker	● Fr: 140 mm (5.5 in.), 35W, 2 Pieces ● Rr: 100 mm (3.9 in.), 35W, 2 Pieces.
5. Tweeter	● 65 mm (2.6 in.), 35W, 2 Pieces
6. Woofer	● 120 mm (4.7 in.) with Box, 55W, 1 Piece

INTERIOR

■ TILT STEERING

When the tilt lever is turned up, the steering wheel moves to the highest position to provide space for easier entry and exit.

When the tilt lever is kept in the raised position, the steering wheel position can be changed to any of the 7 positions within a range of 15.75°.

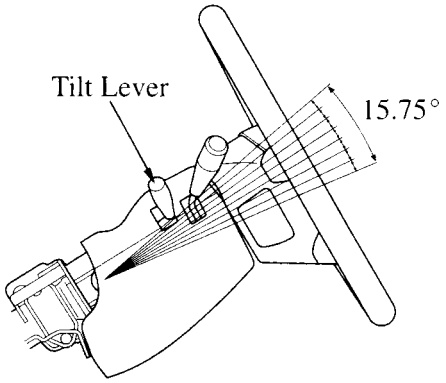

■ ILLUMINATED ENTRY SYSTEM

- An illuminated entry system is standard equipment. This system is useful when inserting the key into the ignition key cylinder in the dark.
- The illuminated entry system turns on the ignition key cylinder illumination light when a door is opened. When the door is closed, the light is delayed about 5 seconds before it is extinguished.

■ CELLULAR MOBILE TELEPHONE

- A cellular mobile telephone system produced by Motorola Inc. is available as a dealer option. 2 types of operation are available to choose, which are a hand–free telephone with microphone built into the steering column, or a hand–set telephone or portablephone stored in the console box.
- A mobile telephone antenna is attached to the rear quarter window for giving improved looks and better rear field vision.

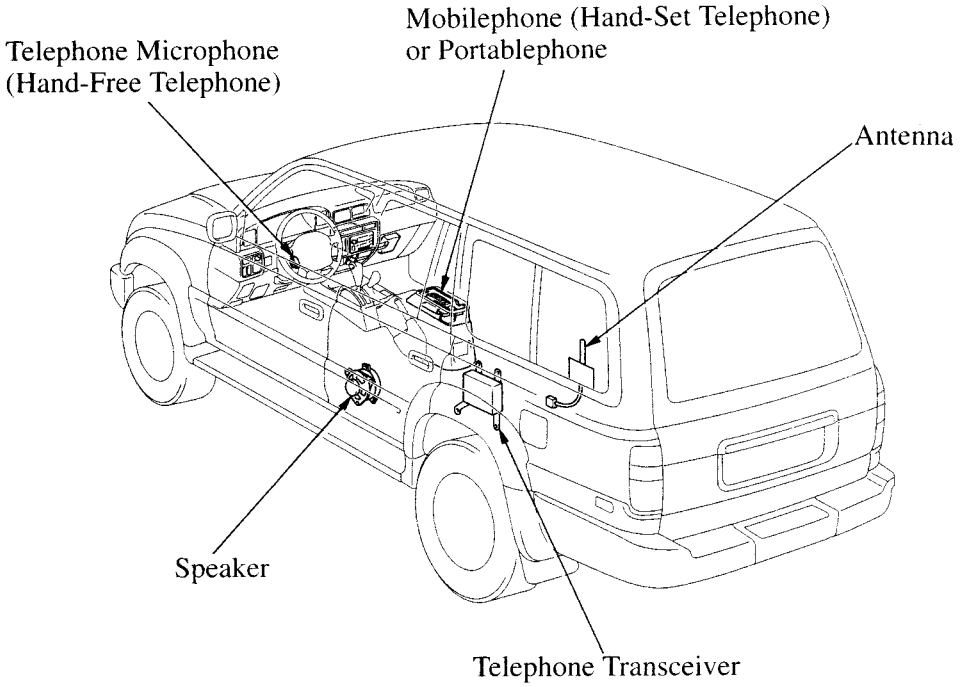

INTERIOR

■ POWER WINDOW SYSTEM

A power window system is standard equipment. The power window system includes one–touch auto down key–off operation functions. The one–touch auto down function automatically opens the driver's side and window fully. The key–off operation function makes it possible to operate the power windows for approximately 60 seconds after the ignition key is turned to the ACC or LOCK position, if the front doors are not opened.

■ DOOR LOCK CONTROL SYSTEM

- The door lock control system with 2-step unlock function is standard equipment. In case of the 2–step function, the driver's door is unlocked by turning the key once and all doors are unlocked by turning twice.

- A key confinement prevention function is provided. When the door is opened and the door lock button is locked with the key being still inserted in the ignition key cylinder, the key confinement prevention mechanism soon turns to unlock the door lock button. This prevents the key from being inadvertently locked inside the vehicle.

■ THEFT DETERRENT SYSTEM

- A theft deterrent system is used to prevent vehicle theft. When the system is set, the horn, parking light and interior light come on when if the door or back door is forcibly opened.

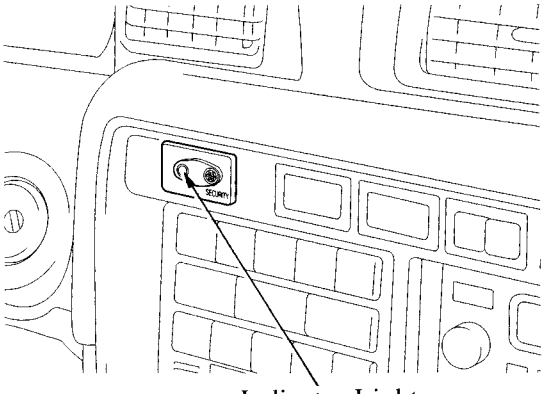

Indicator light

- When the system is set
  — Flashes

- When the system has been activated
  — Flashes in a unique pattern

- The audio system also has an anti–theft system, whereby the radio and cassette deck is disabled when the radio body is stolen from the vehicle.

INTERIOR

■ SRS AIRBAG

The LX450 had a driver's airbag in the steering wheel pad and a front passenger airbag located in the instrument panel above the glove box as standard equipment.

■ CRUISE CONTROL SYSTEM

The cruise control system is standard equipment. The main switch and control switch are on the 1–lever, which is installed on the steering wheel and can be operated easily.

■ KEY REMINDER SYSTEM

All vehicles have a key reminder system as standard equipment. When the ignition key is left inserted in the ignition key cylinder at ACC or LOCK position and the driver's door is opened, this system sounds a warning buzzer to remind the driver to remove the ignition key.

■ REAR CONSOLE BOX

- A rear console box with 2 tray layers provides greater storage space and utility.
- The CD auto changer is enclosed in the bottom of the console box, allowing CD magazines to be inserted form the back of the console box. In addition, a woofer is enclosed in the front of the console box.

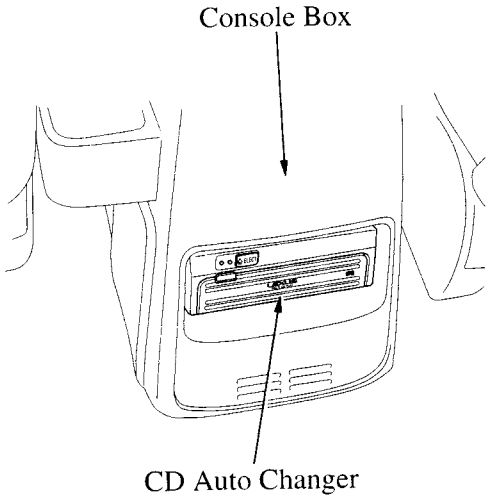

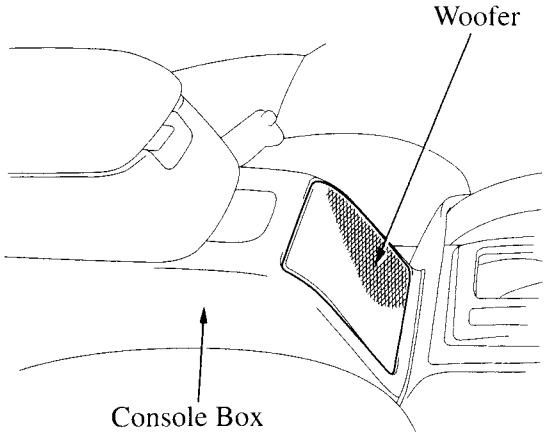

■ STORAGE BOX

Additional storage box is provided on the center cluster.

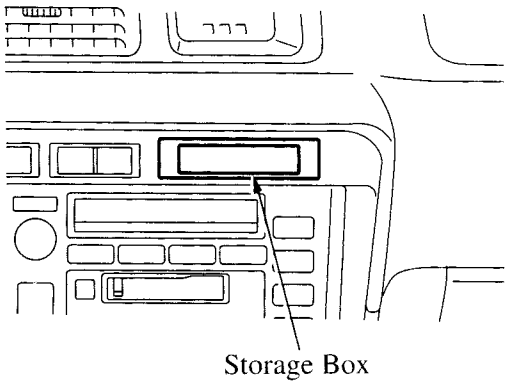

SAFETY AND ENVIRONMENT

A variety of safety and environmental measures are provided based on the theme of “Gentle to People and the Environment”.

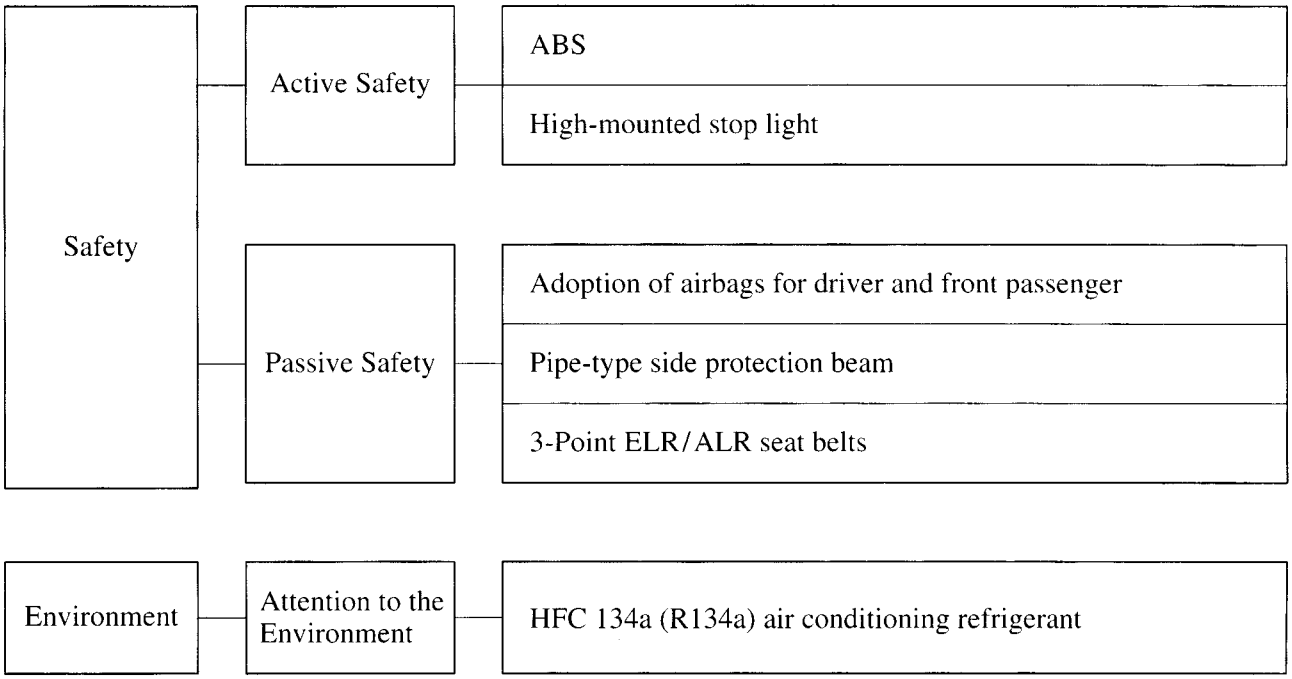

ENGINE

1FZ-FE ENGINE

■ DESCRIPTION

The 1FZ–FE engine is an in–line 6–cylinder, 4.5–liter, 24–valve DOHC engine. It is a high–performance engine for the LX450, offering fuel economy, low vibration, and low noise levels.

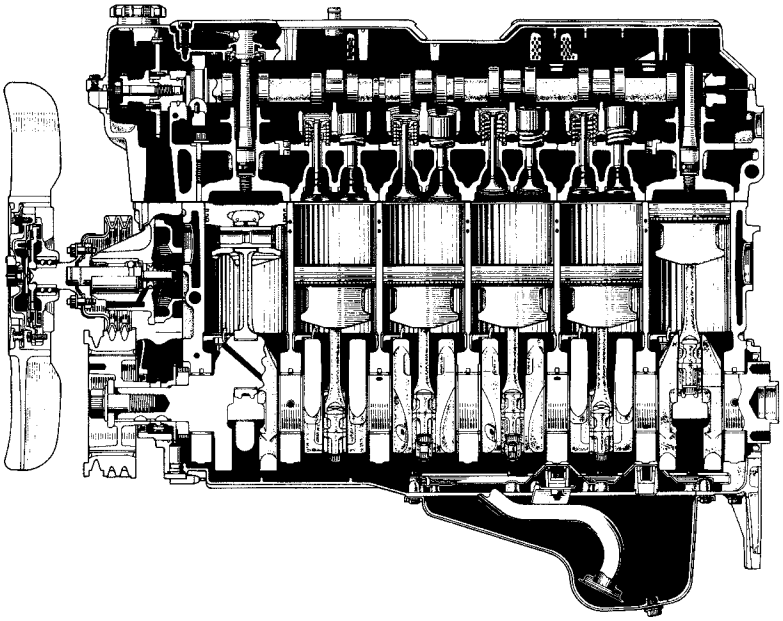

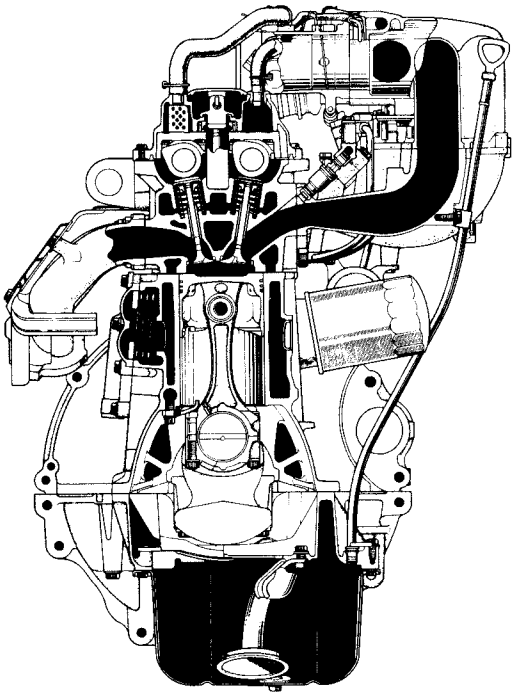

■ ENGINE SPECIFICATIONS AND PERFORMANCE CURVE

Engine / Item			1FZ–FE
No. of Cyls. & Arrangement			6–Cylinder, In–Line
Valve Mechanism			24–Valve DOHC, Belt & Gear Drive
Combustion Chamber			Pentroof Type
Manifolds			Cross–Flow
Fuel System			SFI
Displacement		cm^3 (cu. in.)	4477 (273.1)
Bore x Stroke		mm (in.)	100 x 95.0 x (3.94 x 3.74)
Compression Ratio			9.0 : 1
Firing Order			1 – 5 – 3 – 6 – 2 – 4
Max. Output		[SAE–NET]	158 kW @ 4600 (212 HP @ 4600)
Max. Torque		[SAE–NET]	373 N·m @ 3200 rpm (275 ft·lbf @ 3200 rpm)
Valve Timing	Intake	Open	5°BTDC
		Closed	40°ABDC
	Exhaust	Open	40°BBDC
		Closed	5°ADTC
Fuel Octane Number		(RON)	91
Oil Grade			API SH EC–II, ILSAC or Better

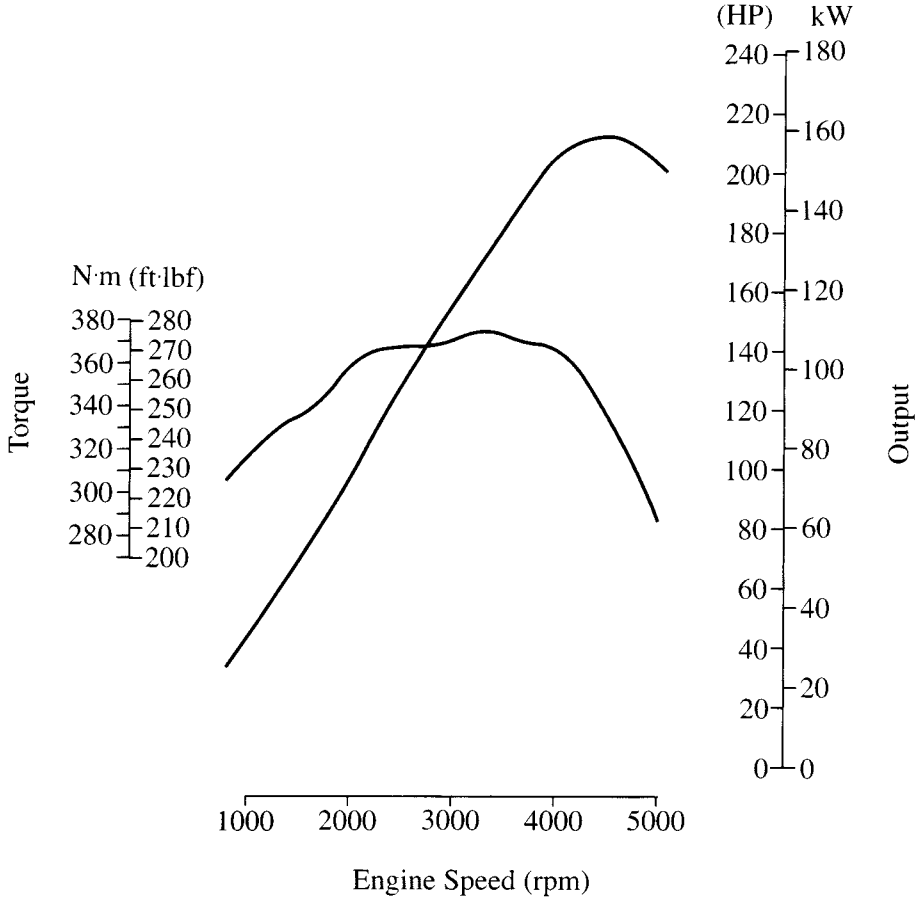

■ FEATURES OF 1FZ–FE ENGINE

Features of the 1FZ–FE engine are listed below.

Feature	Details
High Performance and Economy	● A pentroof type combustion chamber plus high compression ratio. ● Direct–drive DOHC with a 4–valve cross–flow layout for high intake/exhaust efficiency. ● Sequential multiport fuel injection system ● the hot–wire type mass air flow meter improves the accuracy of the intake air volume measurement. ● Twin knock sensors
Light Weight and Compact Design	● A scissors gear mechanism reduces the size of the cylinder head. ● A single roller chain is used to drive the camshaft, thus shortening the engine's total length. ● Integrated throttle body with IAC valve. ● An aluminum radiator is used for weight reduction.
Low Noise and Vibration	● A highly rigid full balance crankshaft and cylinder block are used. ● Use of an aluminum oil pan having an integral stiffener.
Easy to Service	● Outer pad type valve lifters and adjusting shims are used.
High Reliability	● Plastic region tightening bolts are used on major parts. ● A single type timing chain with superb wear resistance is used. ● Heat resistance acryl rubber is used for the cylinder head cover gasket and the head cover is tightened around the outer circumference. ● The water–cooler type engine oil cooler is used to lower the engine oil temperature.

■ ENGINE PROPER

1. Cylinder Head Cover

- The cylinder head cover No. 1 is made of die–cast aluminum. It has also been designed with the tightening bolts located around the outer circumference to improve cover gasket sealing performance.
- A rubber ring type cylinder head cover gasket with excellent sealing characteristics is used.
  The cylinder head cover has a step at the flange area and is fastened at fixed intervals to assure a tight seal.
- The No. 2 and No. 3 cylinder head covers protect the plug cords and improve plug cord reliability.

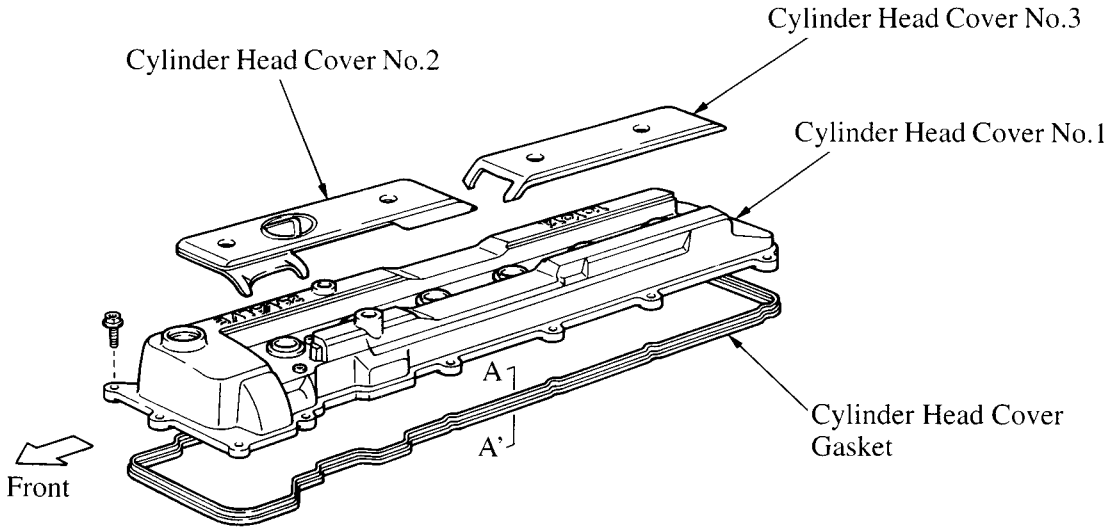

A – A' Cross Section

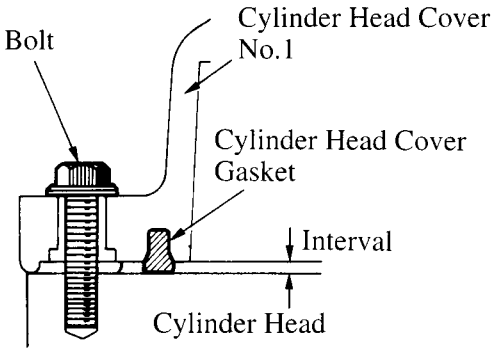

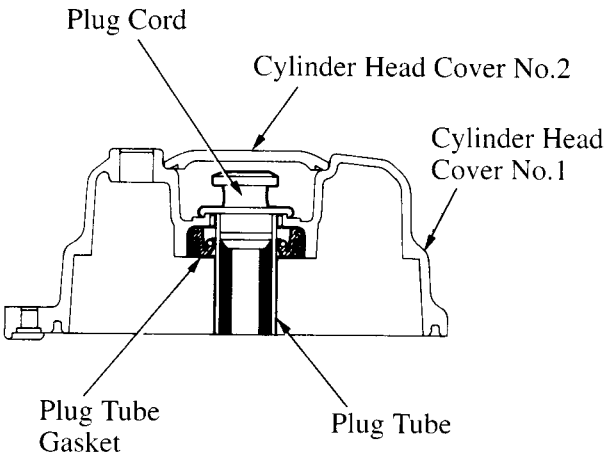

2. Cylinder Head

- An aluminum alloy cylinder head with excellent heat transmission characteristics is used. A cross–flow intake and exhaust layout is used and 4 valves per cylinder are provided to improve intake and exhaust efficiency.
- The exhaust camshaft is driven by the intake camshaft gear and the valve angle has been narrowed to 18°20’ to achieve a more compact cylinder head. Pentroof combustion chambers, which permit the spark plugs to be located in the center of the combustion chamber, are also used to improve combustion efficiency.
- Upright, small–diameter intake ports increase the mid–range torque of the engine.
- Plastic region tightening is used for the cylinder head bolts for good axial tension.

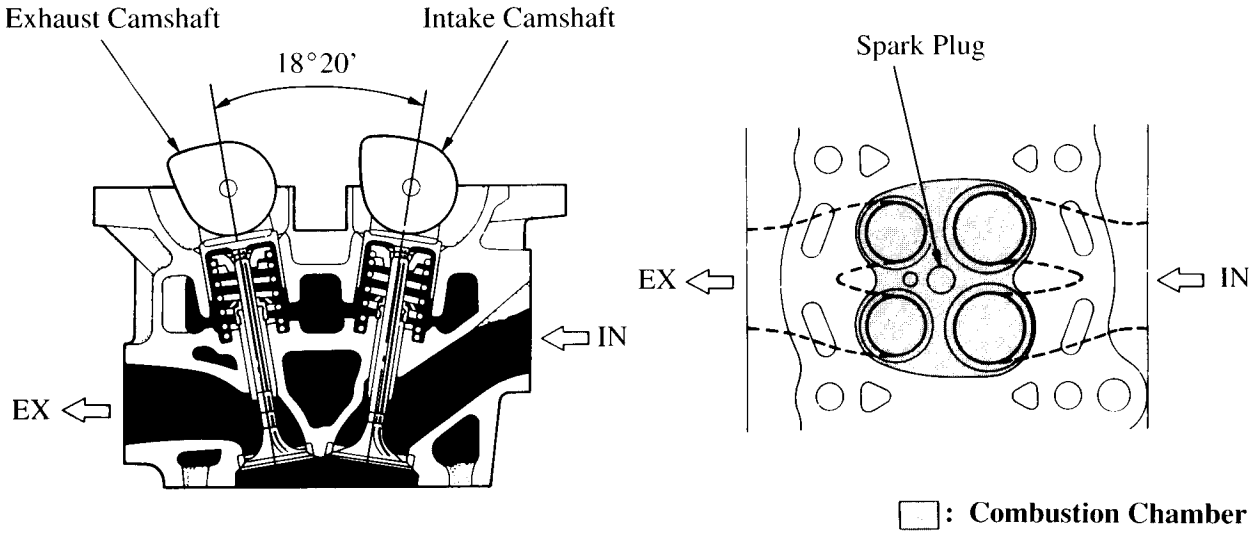

3. Cylinder Head Gasket

- A graphite gasket with stainless grommets is used for the cylinder head gasket to provide excellent pressure resistance and sealing.
- To improve anti–knocking properties, location of water holes have been optimized and cooling characteristics around the combustion chamber have been improved.

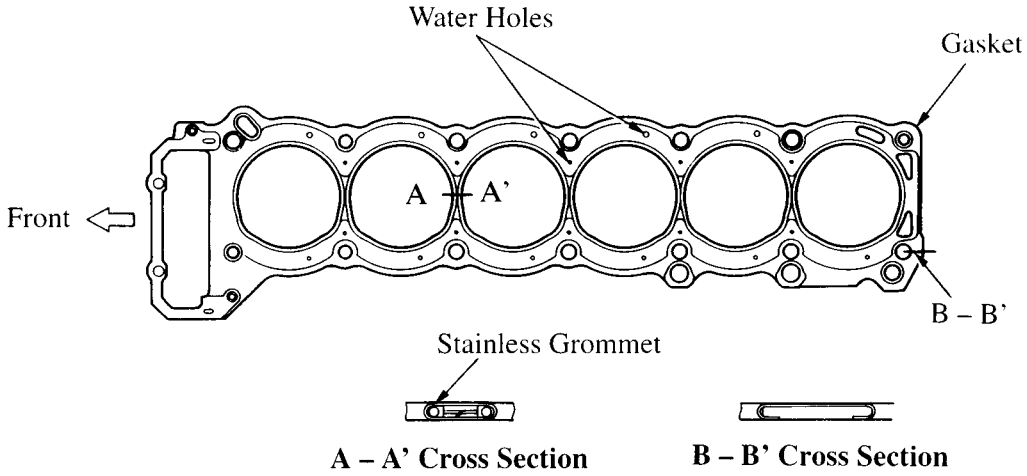

4. Cylinder Block

- The cylinder block, which is characterized by its short skirt, has a curved rear section (funnel shape) and has a curved outer wall to enhanced the rigidity of the block. Also, the optimized rib construction enhances the rigidity of the block.
- To improve cooling performance a coolant passage is provided between all cylinders.
- The oil cooler is an internal type, and is enclosed in the right–hand side of the cylinder block.
- The gear–driven power steering pump is mounted to the front of the cylinder block.

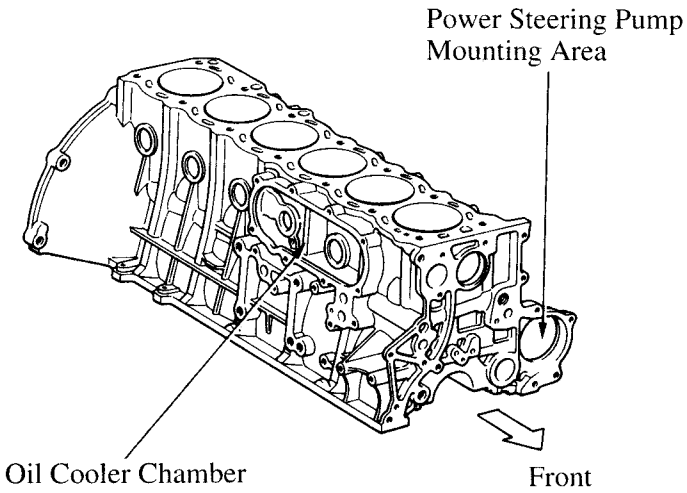

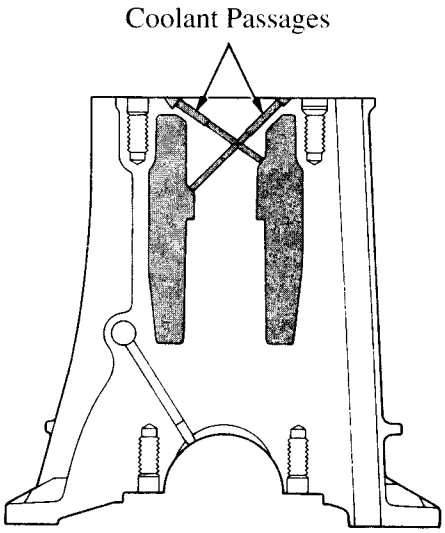

5. Piston

- Aluminum alloy with good high–temperature resistance is used.
- A plastic coating is applied to the skirt surface for enhancing piston reliability.
- Full floating type piston pins are used.

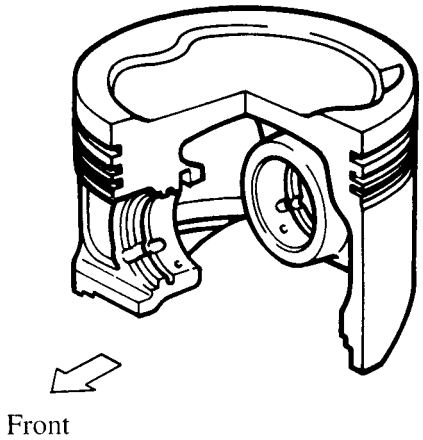

6. Connecting Rod

- Hot forging and double–shot peening processes assure highly rigid connecting rods.
- Plastic region tightening is used for the connecting rod bolts.

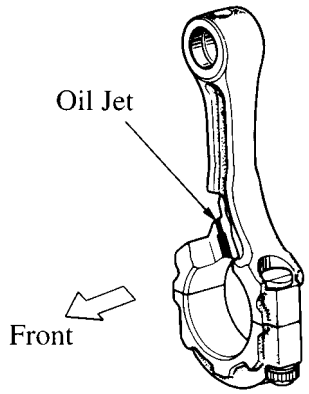

7. Crankshaft

- The crankshaft is made of steel, and had 7 journals and 12 balance weights.
- Pins and journal fillets have been roll–finished and the parallel area has been quenched through a high–frequency process for enhanced reliability.
- The crankshaft bearing is made of aluminum and grooves are made in the upper side to reduce noise.
- Thrust force in the crankshaft is received by the thrust washers of the No. 4 journal.

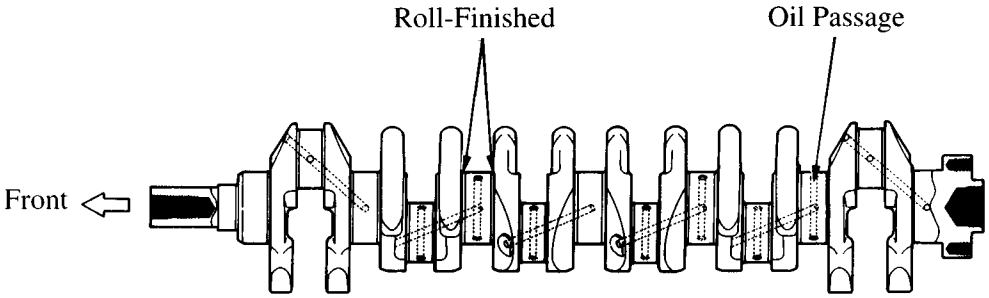

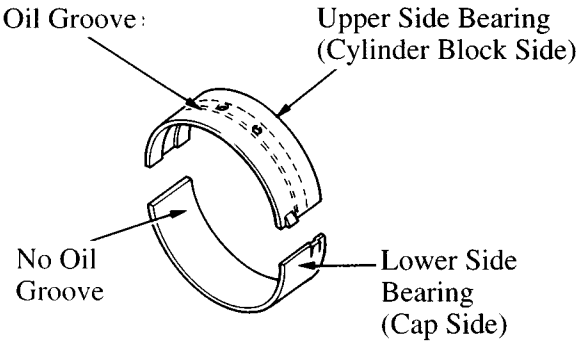

Crankshaft Bearing

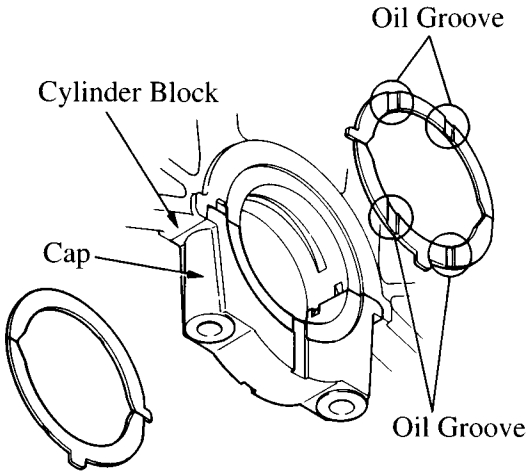

Thrust Washer

8. Crankshaft Pulley

- A torsional damper pulley is used and damper rubber is inserted under high pressure to improve reliability.
- The V–grooves for the air conditioning compressor and fan–and–generator are integrated into the crankshaft pulley.

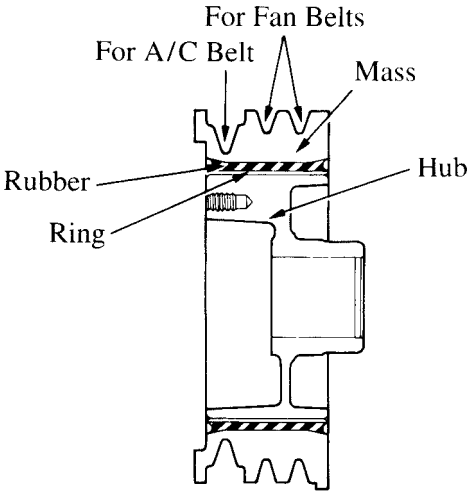

9. Drive Plate

There are 10 plastic–region tightening bolts used for mounting the drive plate.

■ VALVE MECHANISM

1. General

- Each cylinder is equipped with two intake valves and two exhaust valves. Intake and exhaust efficiency has been increased due to the larger total port areas.
- The valves are directly opened and closed by two camshafts.
- The intake camshaft of the 1FZ–FE engine is driven by a chain, while the exhaust camshaft is driven via a gear on the intake camshaft.

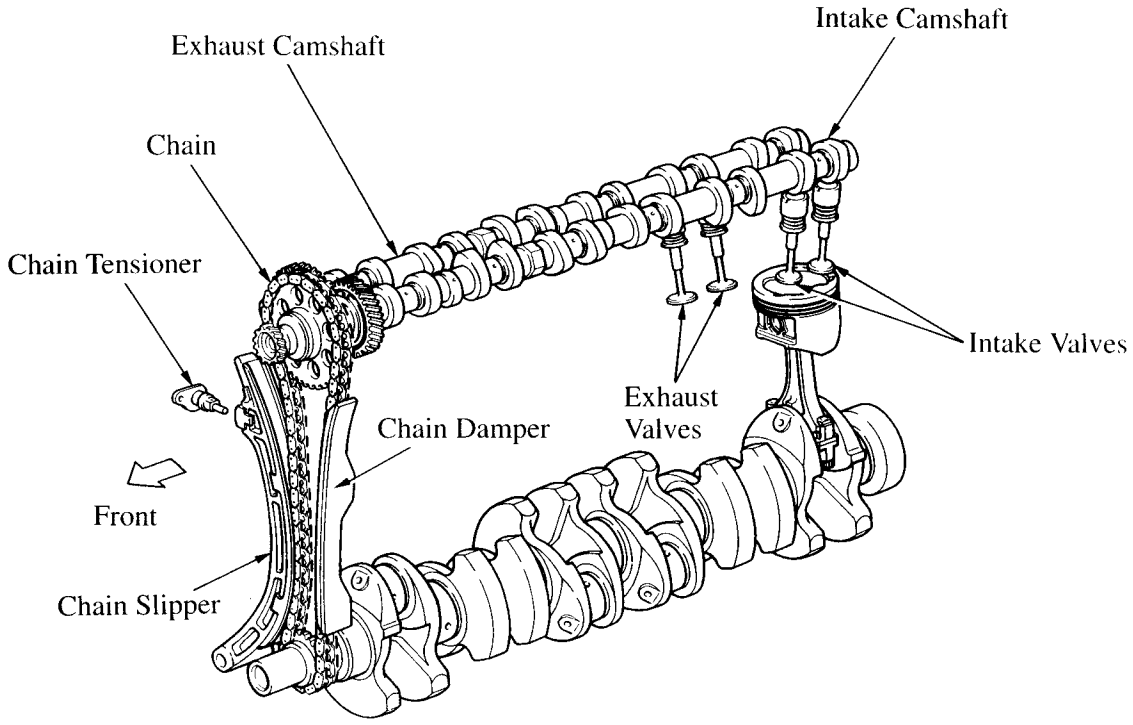

2. Camshafts

- Each camshaft has 7 journals, 6 of which are located between each cam. Thrust force is received by the thrust surface of the No. 1 journal.
- The exhaust camshaft is driven by a gear on the intake camshaft. A scissors gear mechanism has been used on the exhaust camshaft to control backlash and reduce noise.
- The distributor is driven by the gear at the front of the intake camshaft.
- Hexagonal wrench flats are provided between the No. 3 and No. 4 journals for easy service.

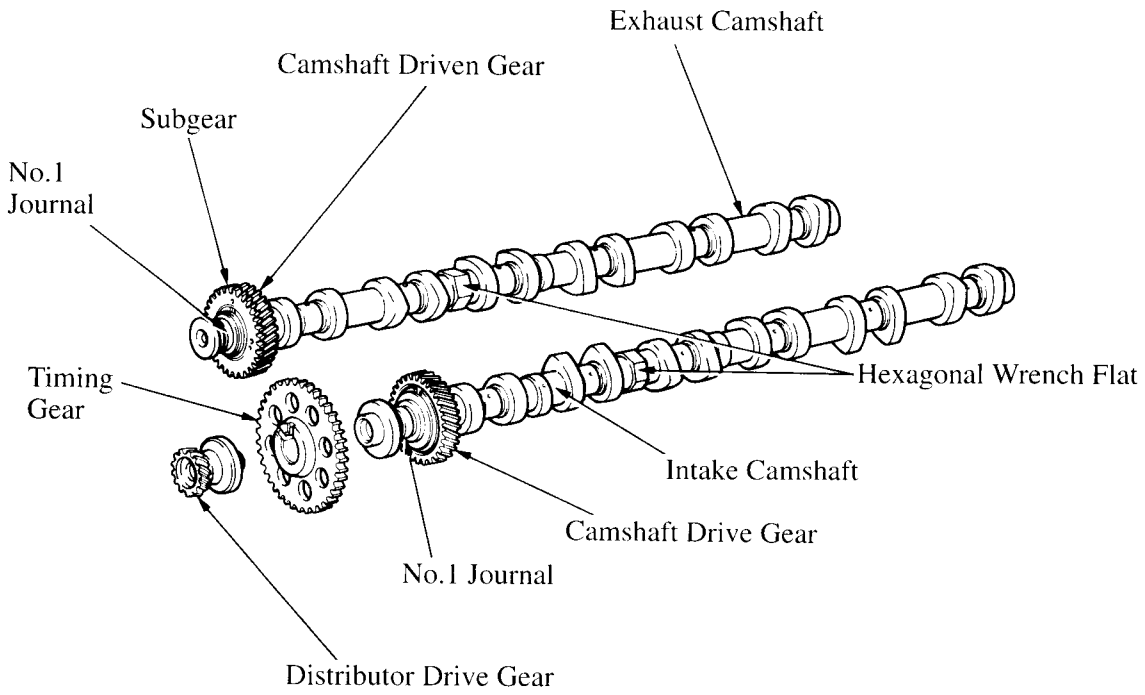

3. Intake and Exhaust Valves

Valve specifications are shown in the table at right.

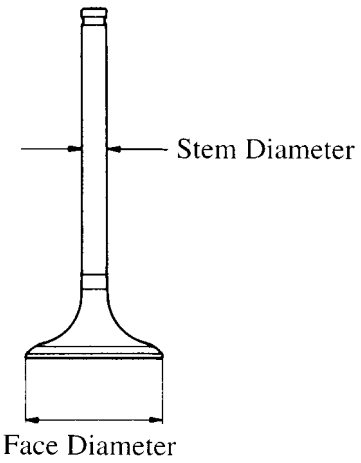

▶ Specifications ◀

mm (in.)

Item / Valve	Face Diameter	Stem Diameter	Material
Intake	38 (1.50)	7 (0.28)	Heat –Resistant Steel
Exhaust	32 (1.26)	7 (0.28)	Heat–Resistant Steel (Valve face: alloyed junction)

4. Valve Lifter and Valve Adjusting Shims

Outer shim type valve adjusting shims located in the top of the valve lifters are used to improve serviceability.

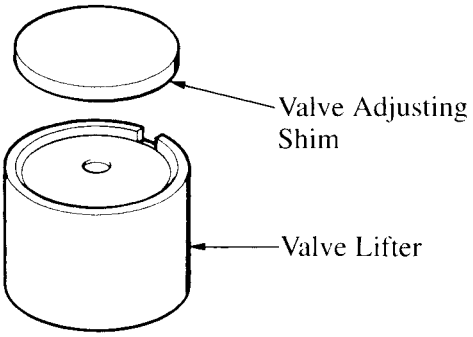

5. Timing Chain

- A material which has excellent wear resistance has been selected for the timing chain to improve reliability.
- The timing chain is lubricated by and oil jet mounted in the cylinder block.

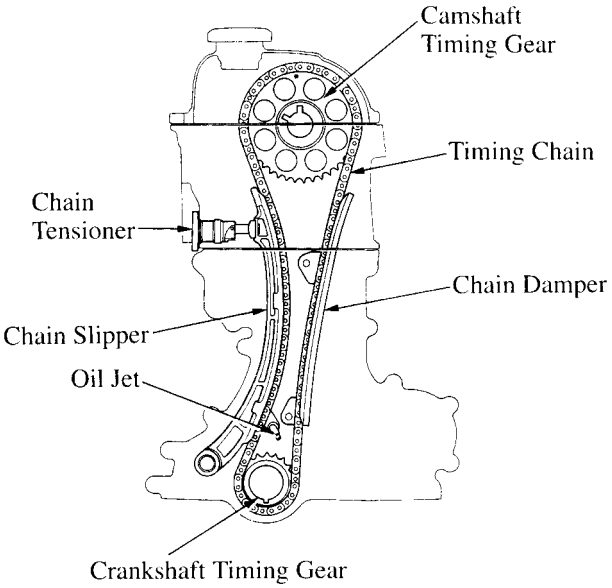

6. Chain Tensioner

The chain tensioner uses a spring oil pressure to maintain proper chain tension at all times.

The chain tensioner suppresses noise generated by the chain.

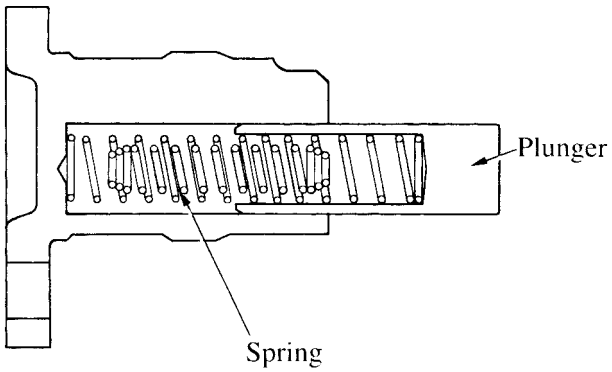

■ LUBRICATION SYSTEM

1. General

The lubrication circuit is fully pressurized and all oil passes through an oil filter.

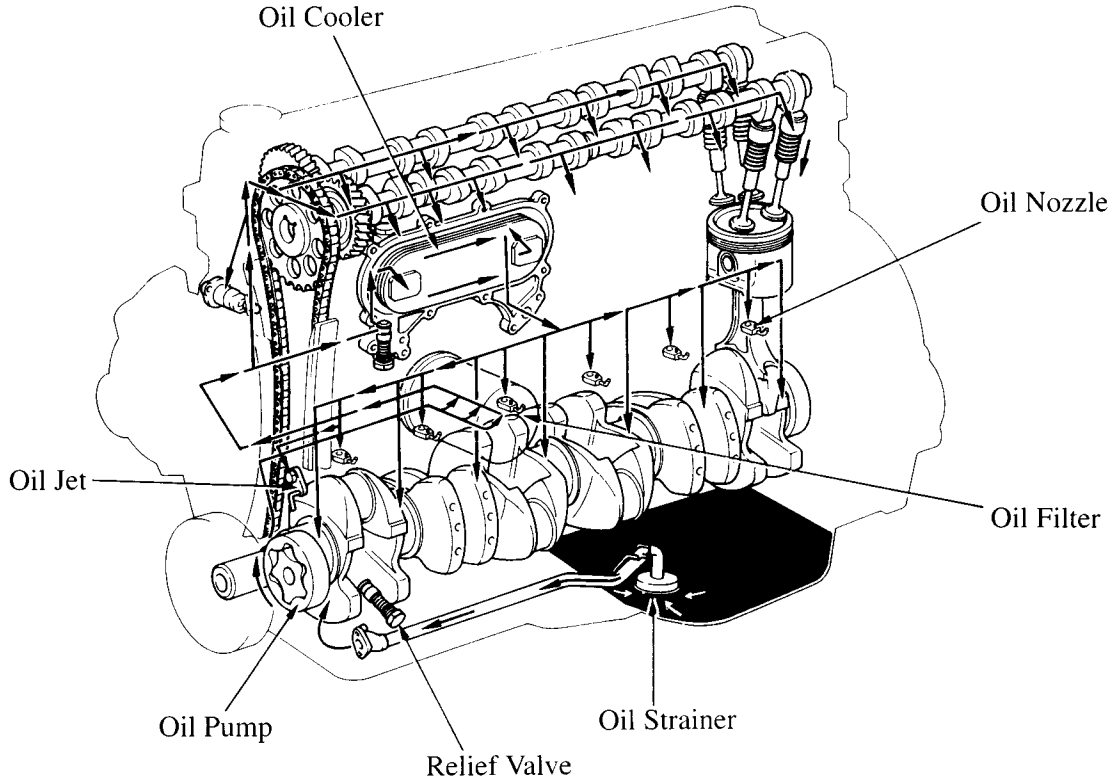

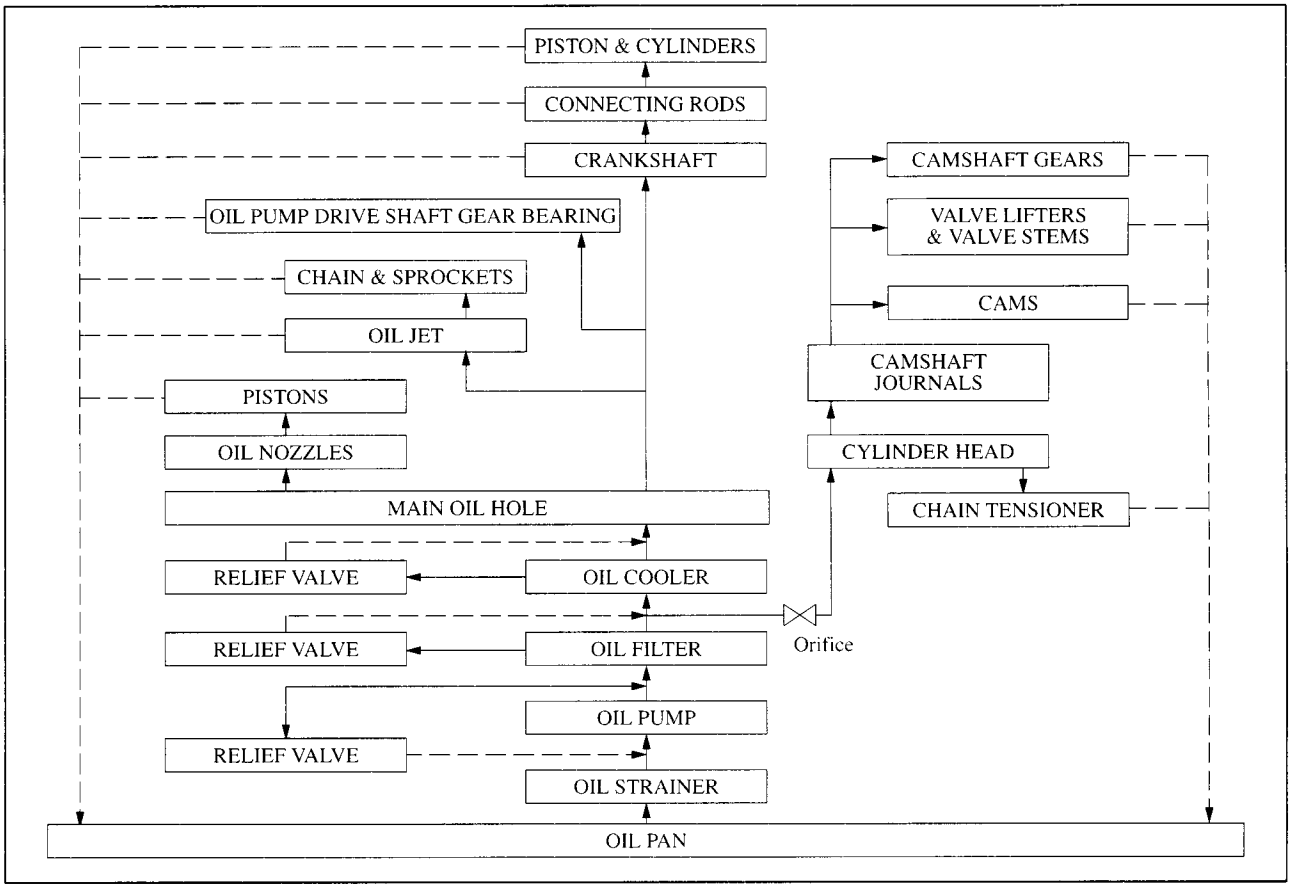

2. Oil Pan

- The oil pan consists of 2 materials. The No. 1 oil pan is made of aluminum alloy and the No. 2 pan is made of rust–resistant sheet steel.
- The upper oil pan section is secured to the cylinder block and transmission, increasing rigidity.
- The oil level sensor is located on the No. 1 oil pan.

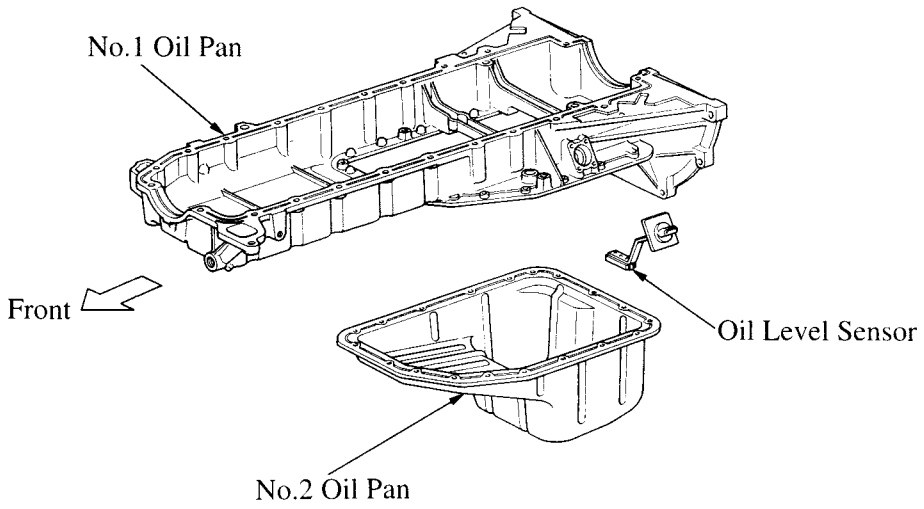

3. Oil Pump

- The trochoidal oil pump is integrated with the timing chain cover.
- The oil pump is driven by the oil pump drive shaft gear, which in turn is driven by the crankshaft. The oil pump drive shaft gear also drives the power steering pump.

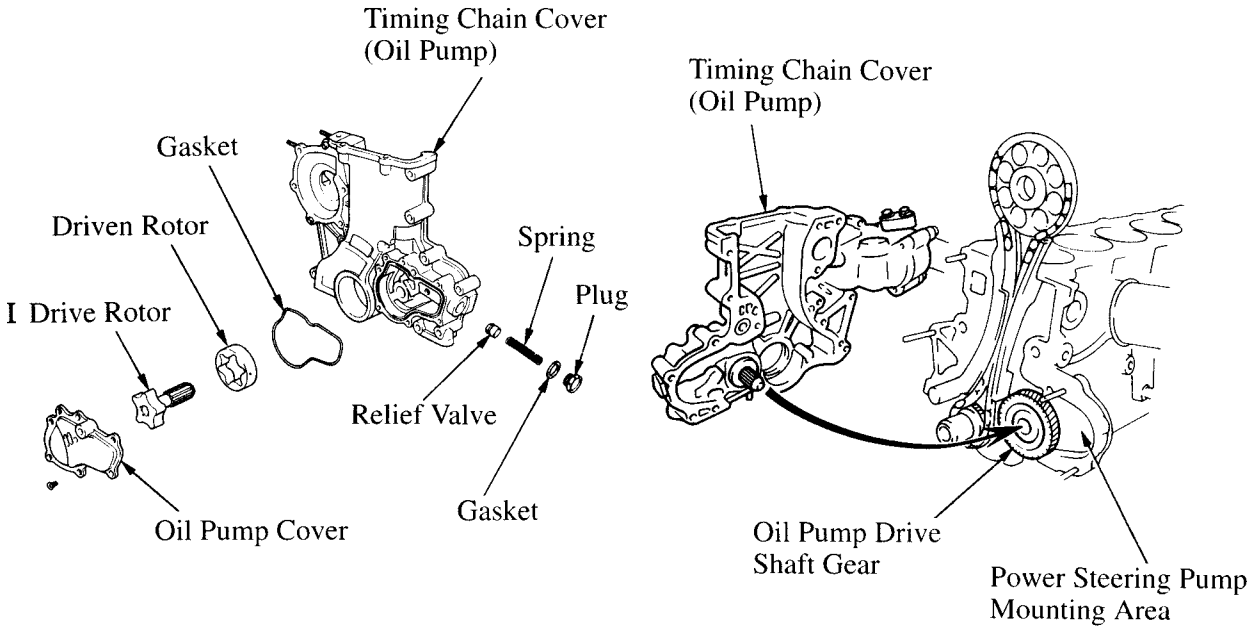

4. Oil Cooler

The water–cooled oil cooler is enclosed in the cylinder block.

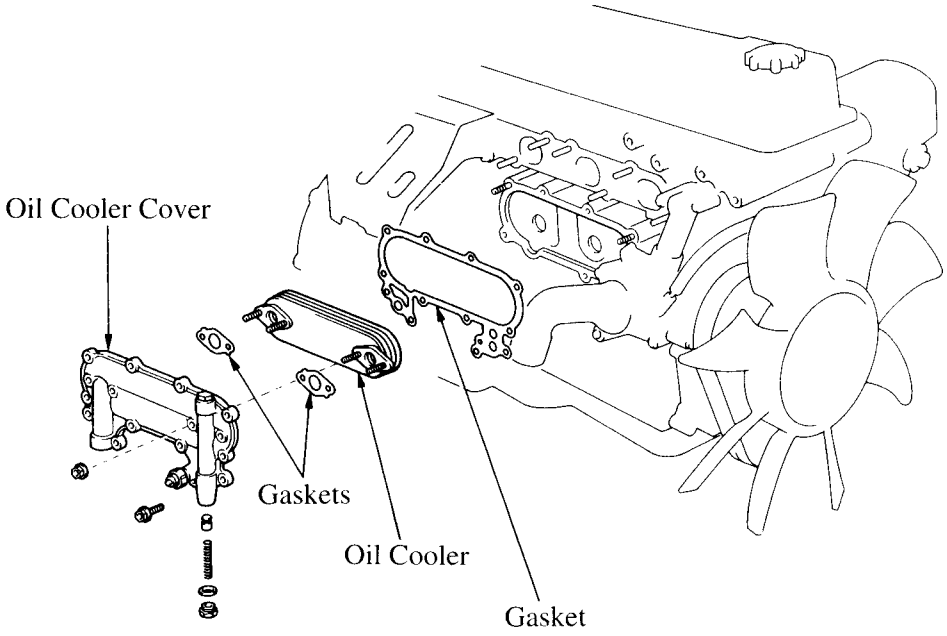

5. Oil Nozzles

The oil nozzles in the cylinder block have been designed to cool the areas surrounding the pistons.

A check valve is provided in each oil nozzle to stop oil spray when the oil pressure is low.

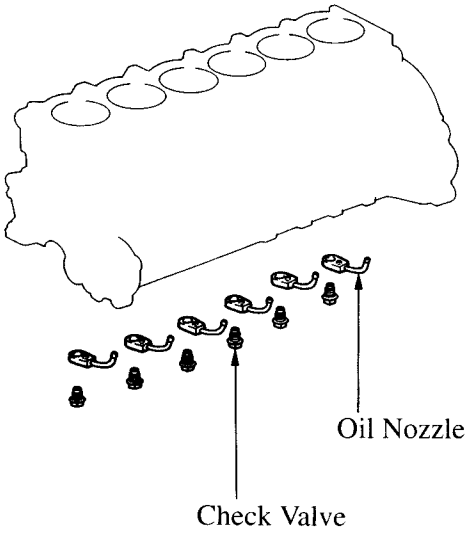

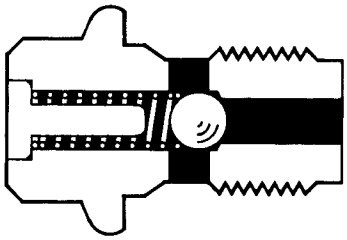

Check Valve

■ COOLING SYSTEM

1. General

- The cooling system is a pressurized, forced–circulation type.
- The thermostat with a bypass valve is located on the water pump inlet side of the cooling circuit. As the coolant temperature rises, the thermostat opens and the bypass valve closes, so the system maintains suitable temperature distribution in the cylinder head.

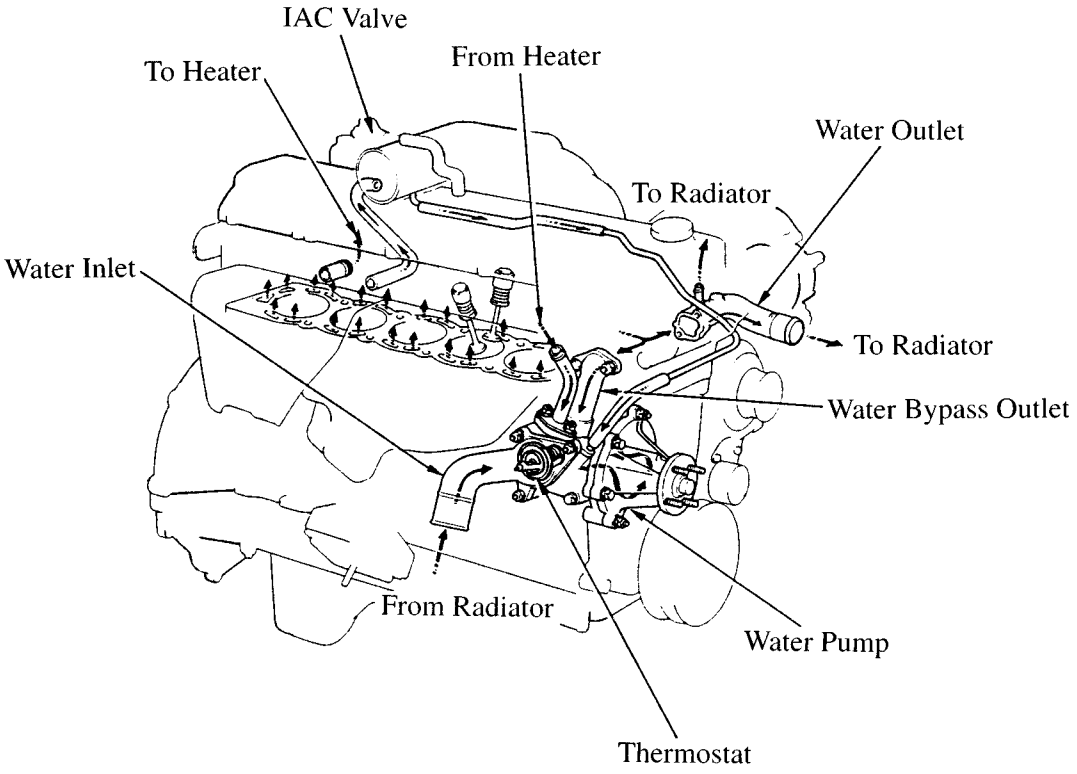

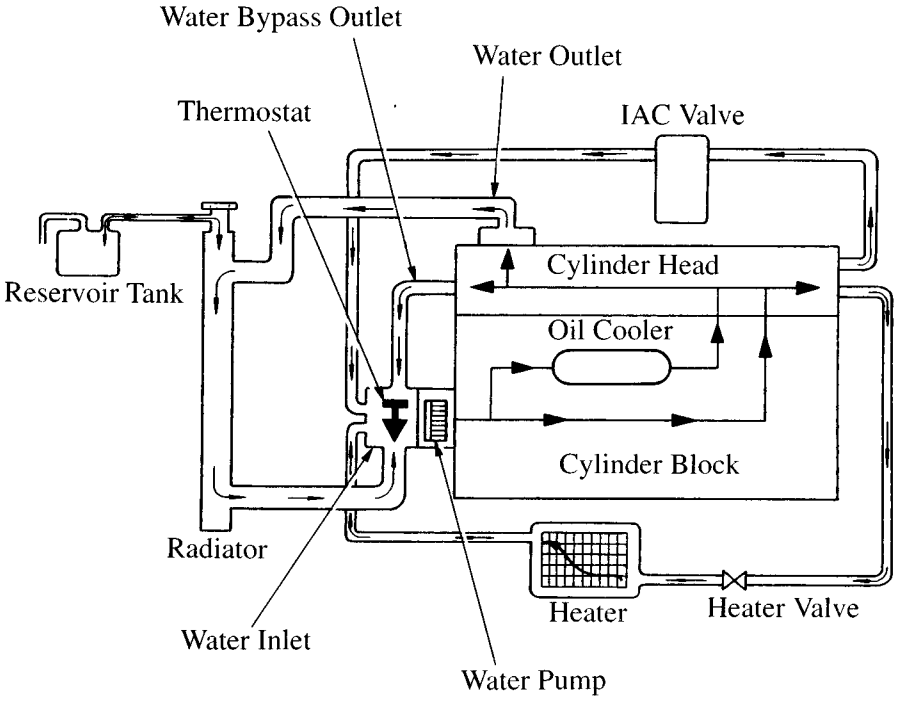

2. Water Pump

The water pump rotor is made of stainless steel for improving rust–resistance.

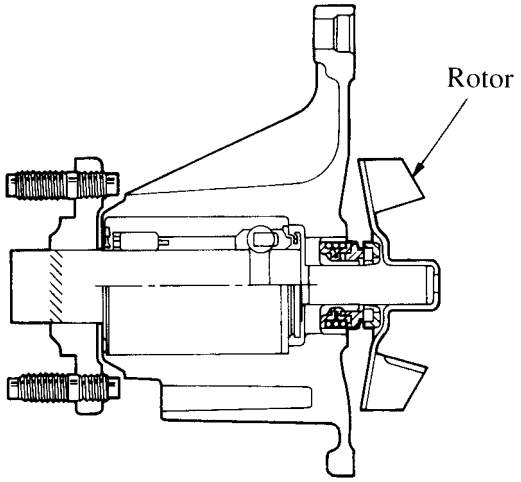

3. Coupling Fan

Two types of temperature–controlled auto–coupling fans are used depending on the parts supplier.

▶ Fan Coupling Characteristics◀

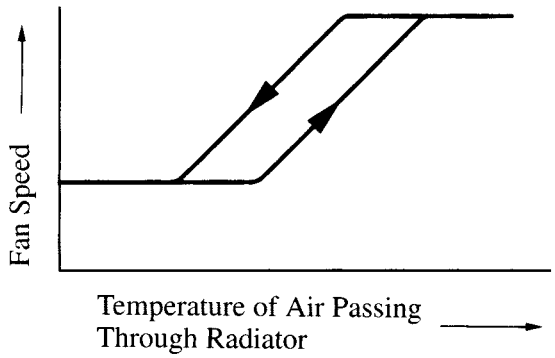

Linear Control Type
(Manufactured by Eaton)

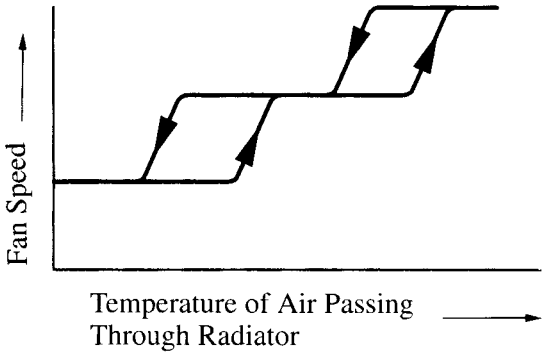

3-Stage Type
(Manufactured by Aisin)

4. Radiator

The aluminum radiator core is used for weight reduction.

■ INTAKE AND EXHAUST SYSTEM

1. Air Cleaner

The cyclone type air cleaner is used.

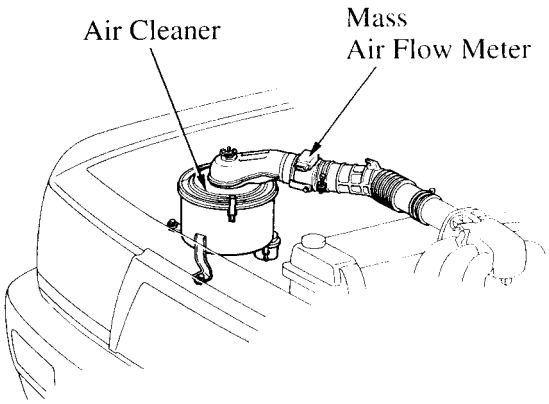

2. Throttle Body

A small IAC valve is integrated with the throttle valve for lighter weight.

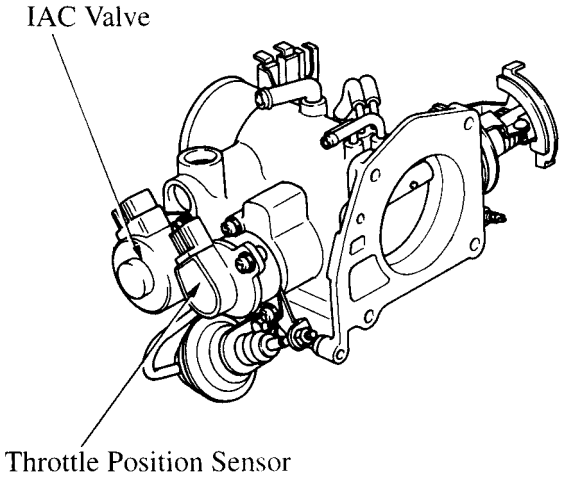

3. Intake Manifold

The length and diameter of the intake manifold and intake air chamber ports have been optimized.

Each port has been lengthened and equalized for enhancing intake efficiency.

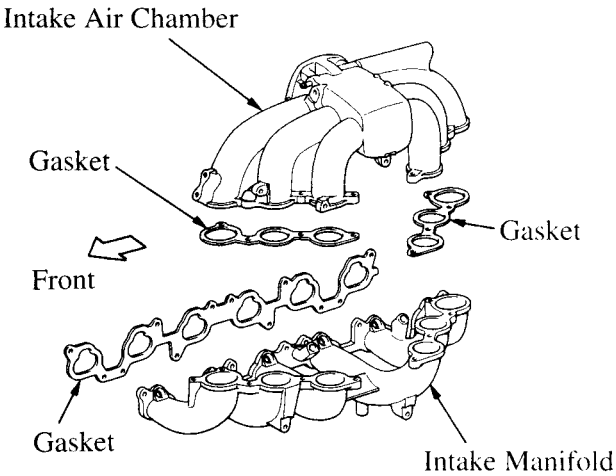

4. Exhaust Manifold

- The exhaust manifolds are made of a high silicon content spheroidal graphite cast iron which offers strength at high temperatures. There are 2 compact manifolds for 3 cylinders each.
- The exhaust manifold gaskets are made of laminated metal.
- A hot–dip coated steel sheet, which provides strong heat resistance and corrosion resistance, is used for the heat insulators. 2 layers of this material are used for the heat insulators to reduce noise and vibration.

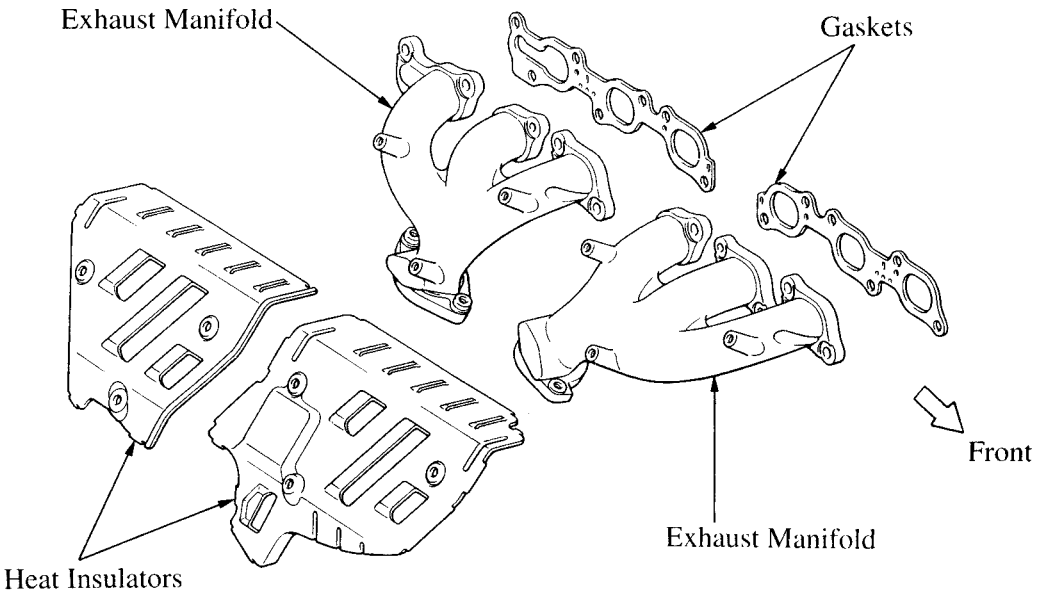

5. Exhaust Pipe

- The exhaust pipes are made of stainless steel.
- The catalytic converters are monolithic type three–way catalytic converters.
- Large mufflers (main and sub) effectively reduce noise and exhaust pressure form the large capacity engine.

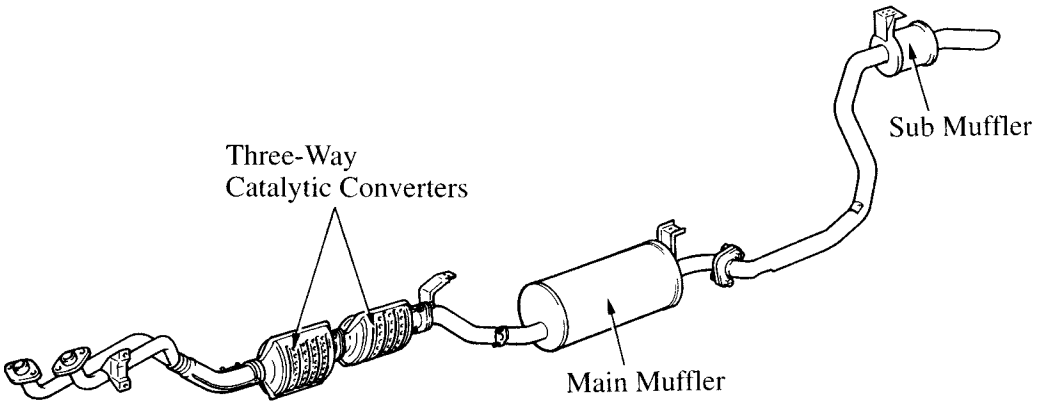

■ FUEL SYSTEM

1. General

Fuel is supplied under pressure by an electric fuel pump from the fuel tank through the fuel filter to the injectors.

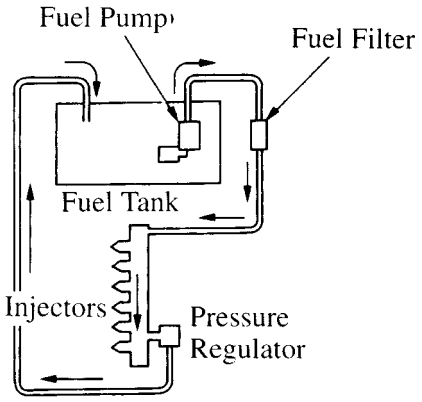

2. Fuel Injectors

2–hole type fuel injectors are used to match the 4–valve–per cylinder engine.

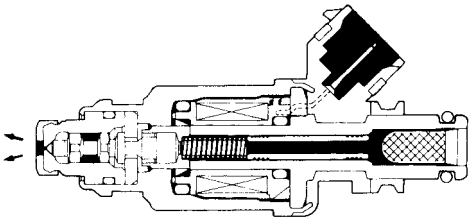

■ IGNITION SYSTEM

The ESA (Electronic Spark Advance) system is used in the ignition system.

1. Distributor

- A crankshaft angle sensor (G1 and G2) and an engine speed sensor (NE) are built in the distributor.
- A distributor is driven by drive gear fitted to the intake camshaft.

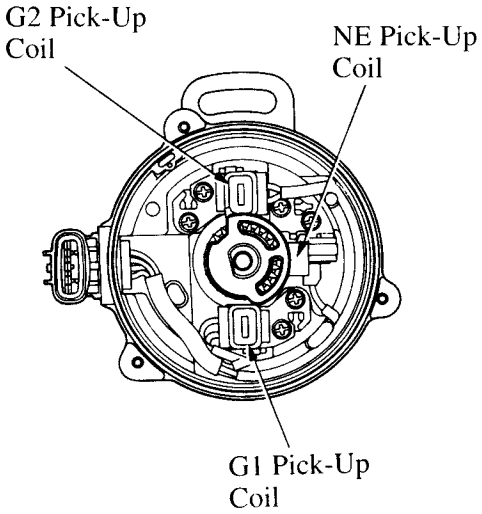

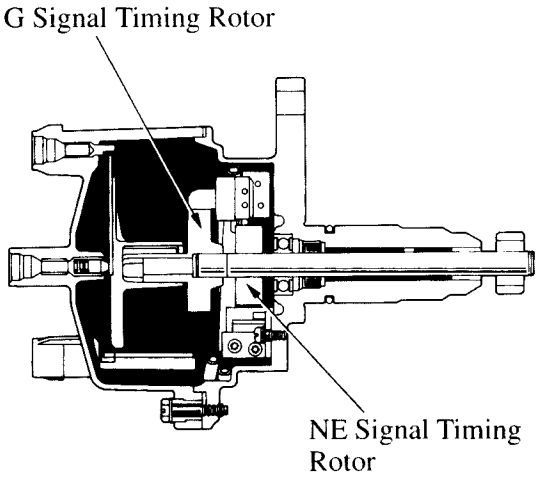

■ ENGINE MOUNTING

- The 1FZ–FE engine is supported by 3 engine mounts, with two in the front and one in the rear.
- Rigid spheroidal graphite cast iron engine mount brackets are used in the front to reduce noise and vibration.

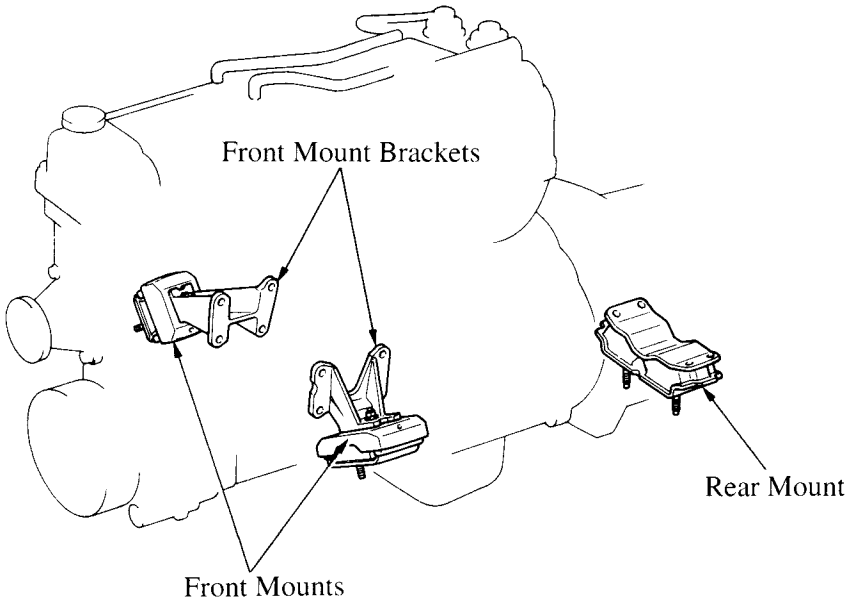

■ ENGINE CONTROL SYSTEM

1. General

The engine control system of the 1FZ–FE engine is basically the same in construction and operation as that of the 2JZ–GE engine of the ’96 SC300.

The engine control system of the 1FZ–FE engine and 2JZ–GE engine are compared below.

System	Outline		LX450	’96 SC300
			1FZ–FE	2JZ–GE
EFI (Sequential Multiport Fuel Injection)	An L-type SFI system directly detects the intake air volume with a hot wire type mass air flow meter.		○	○
	The fuel injection system is a sequential multiport fuel injection system.		○	○
ESA (Electronic Spark Advance)	Ignition timing is determined by the ECM based on signals from various sensors. Corrects ignition timing in response to engine knocking.		○	○
	Torque control correction during gear shifting has been used to minimize the shift shock.		○	○
	2 knock sensors are used to further improve knock detection.		○	○
IAC Idle Air Control)	A step motor type IAC valve controls the fast idle and idle speeds.		○	○
ACIS (Acoustic Control Induction System)	The intake air passages are switched according to the engine speed and throttle valve opening angle to provide high performance in all speed ranges.		—	○
Fuel Pump Control	The ECM controls the operation of the fuel pump based on the engine speed signal.		○	—
Fuel Pump Speed Control	Under light engine loads, pump speed is low to reduce electric power loss.	Uses a fuel pump relay and a fuel pump resistor.	○	—
		Uses a fuel pump ECU.	—	○
Fuel Pressure Control	In hot engine conditions, the fuel pressure is increased to improve restartability.		○	○
Oxygen Sensor Heater Control	Maintains the temperature of the oxygen sensor at an appropriate level to increase accuracy of detection of the oxygen concentration in the exhaust gas.		○	○
EGR Cut-Off Control	The EGR is cut off under light engine loads or low temperature conditions to maintain drivability.		○	○

System	Outline	LX450	'96 SC300
		1FZ–FE	2JZ–GE
Evaporative Emission Control	The ECM controls the purge flow of evaporative emissions (HC) in the charcoal cannister in accordance with engine conditions.	—	○
Air Conditioning Cut–Off Control	By turning the air conditioning compressor ON or OFF in accordance with the engine condition, drivability is maintained.	—	○
Diagnosis	When ECM detects a malfunction, the ECM diagnoses and memorizes the failed section.	○	○
Fail–Safe	When the ECM detects a malfunction, the ECM stops or controls the engine according to the data already stored in memory.	○	○

2. Construction

The configuration of the engine control system in the 1FZ–FE engine of the LX450 is as shown in the following chart.

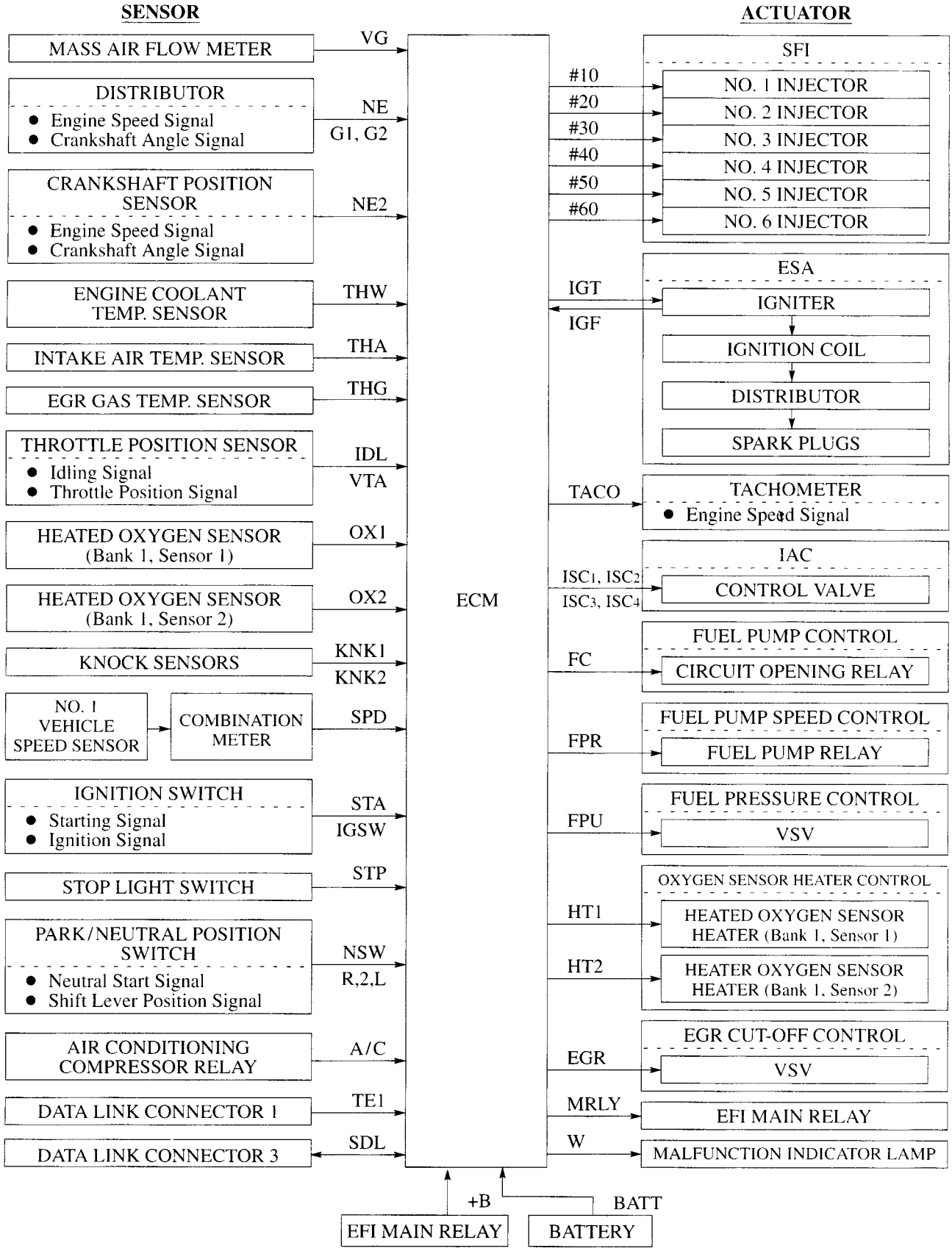

3. Engine Control System Diagram

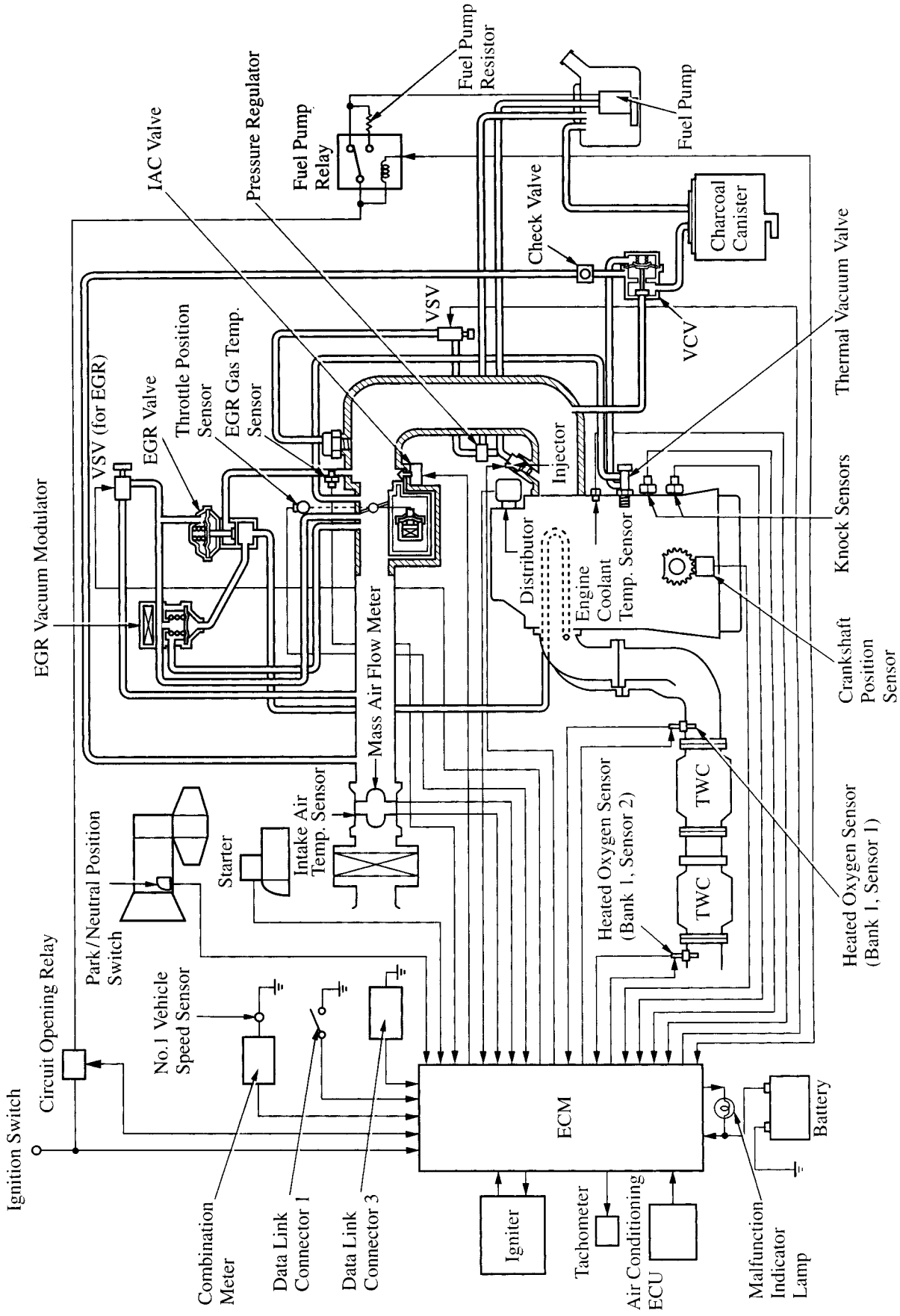

4. Layout of Components

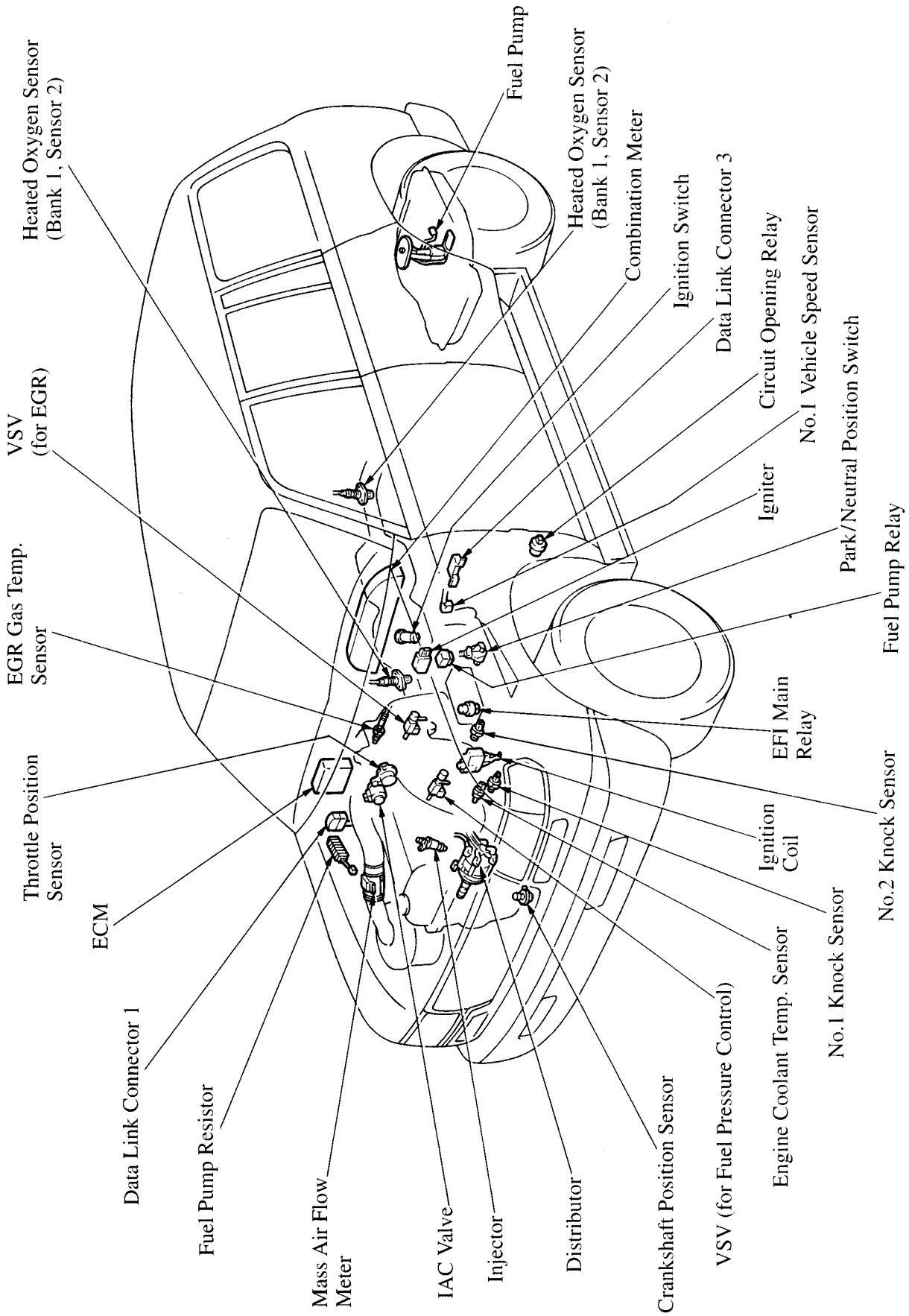

5. Main Components of Engine Control System

General

The following table compares the main components of the 1FZ–FE engine and 2JZ–GE engine in the ’96 SC300.

Model		LX450	’96 SC300
Engine		1FZ–FE	2JZ–GE
Component			
Mass Air Flow Meter		Hot–Wire Type	—
Distributor	Crankshaft Angle Sensor and Engine Speed Sensor	3 Pick–Up Coil (G1, G2, NE)	←
Crankshaft Position Sensor		1 Pick–Up Coil (NE2)	←
Throttle Position Sensor		Linear Type	←
Oxygen Sensor		Heated Oxygen Sensor (Bank 1, Sensor 1) (Bank 1, Sensor 2)	Heated Oxygen Sensor (Bank 1, Sensor 1) (Bank 1, Sensor 2) (Bank 2, Sensor 1)
Knock Sensor	Type	Built–In Piezoelectric	←
	Number	2	←
Fuel Injector		2–Hole Type	←
IAC Valve		Step Motor Type	←

Crankshaft Position Sensor

The crankshaft position sensor [NE2 Signal] has been installed on the No. 1 oil pan.

The ECM detects a misfire based on the NE2 signal received form the crankshaft position sensor.

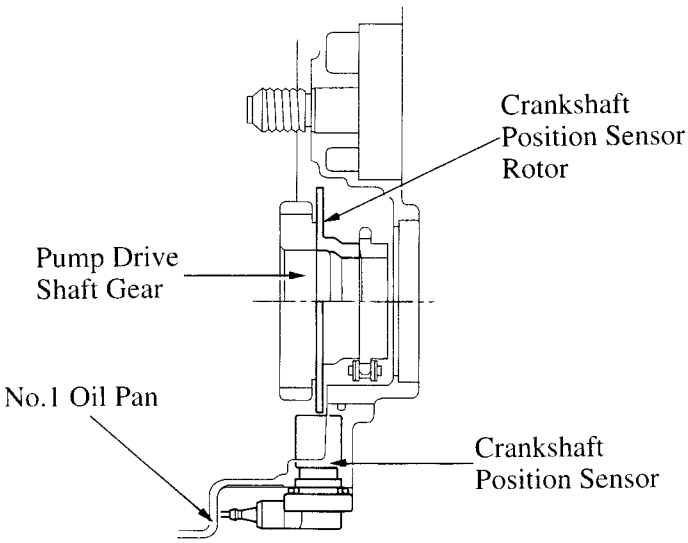

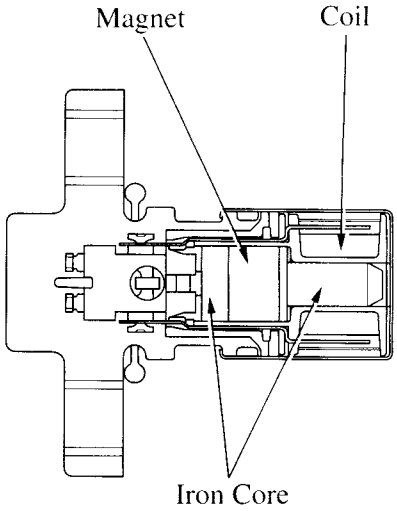

Crankshaft Position Sensor Cross Section

6. Fuel Pump Speed Control

As in the 2JZ–GE engine of the ’96 SC300, this system switches the fuel pump speed between high and low speed according to engine conditions, reducing the electrical load. However, in the 1FZ–FE engine, the fuel pump speed switching component has been changed from the fuel pump control ECU of 2JZ–GE engine to fuel pump control relay and resistor. This system is basically the same as that used in the 1UZ–FE engine of the ’91 LS400. For details, see ’90 LS400 New Car Features (Pub. No. NCF054U) on page 148.

■ EMISSION CONTROL SYSTEM

1. Evaporative Emission Control System

With the engine at operating temperature and the throttle valve being open, the intake manifold pressure from Port "A" via the TVV (thermal vacuum valve) is applied to the VCV (vacuum control valve) diaphragm.

Because external air is introduced to VCV's chamber "a" via a check valve, the VCV valve opens, causing the evaporative emission in the charcoal canister to be discharged into the purge port.

When the engine is cold or idling, the intake manifold pressure is not applied to the VCV diaphragm.

Thus, the VCV valve remains closed by the power of the spring.

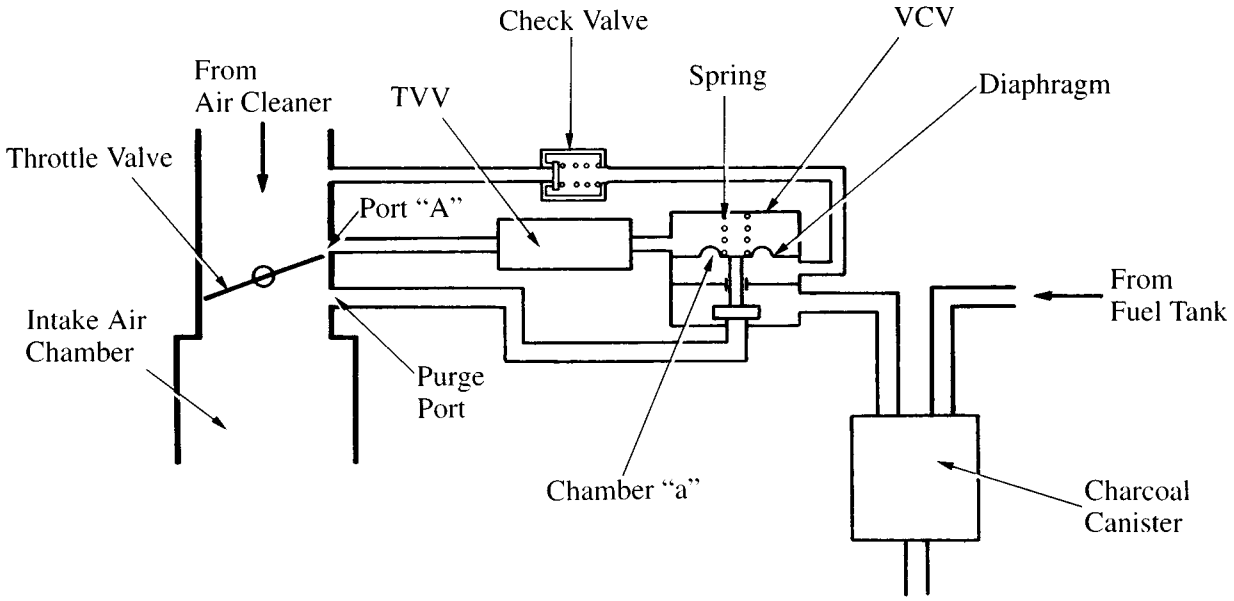

CHASSIS

A343F AUTOMATIC TRANSMISSION

■ DESCRIPTION

The A343F automatic transmission adopted in the LX450 is a 4–speed ECT (Electronically Controlled Transmission).

Although the basic construction and operation of the A343F are the same as those of the A340E used in the ’96 SC300, the gear ratio of its 4th gear (overdrive) has been modified and 2nd start system has been adopted in the electronic control system.

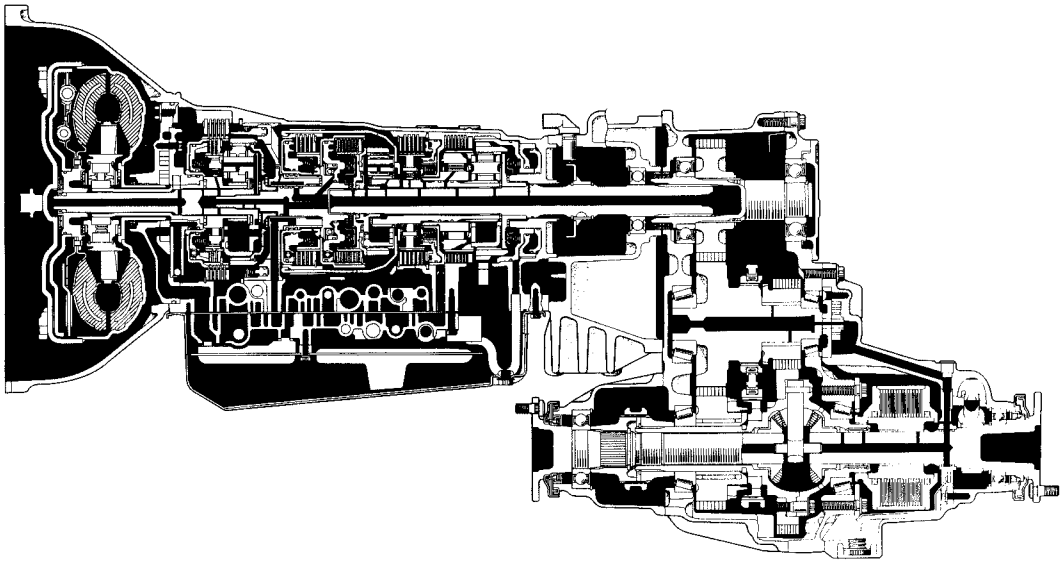

A343F Automatic Transmission with HF2AV transfer

▶ Specifications ◀

Model		LX450	’96 SC300
Transmission Type		A343F	A340E
Engine Type		1FZ–FE	2JZ–GE
Item			
Gear Ratio	1st	2.804	←
	2nd	1.531	←
	3rd	1.000	←
	4th (Overdrive)	0.753	0.705
	Reverse	2.393	←
Fluid Capacity	liters (US qts, Imp. qts)	11.7 (12.4, 10.3)	7.6 (8.0, 6.7)
Fluid Type		ATF Type DEXRON®II	←

■ TORQUE CONVERTER AND PLANETARY GEAR UNIT

The specification of the torque converter and planetary gear unit have been revised to match the 1 FZ–FE engine.

▶ Torque Converter ◀

Model	LX450	’96 SC300
Transmission Type	A343F	A340E
Engine Type / Item	1FZ–FE	2JZ–GE
Converter Type	3–Element, 1–Step, 2–Phase, with Lock–Up Mechanism	←
Stall Torque Ratio	1.800	1.900
Nominal Diameter mm (in.)	272 (10.7)	254 (10.0)

▶ Planetary Gear Unit ◀

Model			LX45O	’96 SC400
Transmission Type			A343F	A340E
Engine Type / Item			1FZ–FE	2JZ–GE
C0	OD Direct Clutch	No. of Discs	2	←
C1	Forward Clutch	No. of Discs	6	5
C2	Direct Clutch	No. of Discs	4	←
B0	OD Brake	No. of Discs	5	4
B1	2nd Coast Brake	Band Width mm (in.)	40 (1.57)	←
B2	2nd Brake	No. of Discs	5	←
B3	1st & Reverse Brake	No. of Discs	7	6
F0	OD One–Way Clutch	No. of Sprags	24	←
F1	No.1 One–Way Clutch	No. of Sprags	22	←
F2	No.2 One–Way Clutch	No. of Sprags	28	←
Front Planetary Gear		No. of Sun Gear Teeth	42	←
		No. of Pinion Gear Teeth	19	←
		No. of Ring Gear Teeth	79	←
Rear Planetary		No. of Sun Gear Teeth	33	←
		No. of Pinion Gear Teeth	23	←
		No. of Ring Gear Teeth	79	←
OD Planetary Gear		No. of Sun Gear Teeth	31	33
		No. of Pinion Gear Teeth	33	23
		No. of Ring Gear Teeth	95	79

■ ENGINE CONTROL SYSTEM

1. General

The electronic control system of the A343F is basically the same in construction and operation as that of the A340E of the ’96 SC300. However, a 2nd start system has been adopted, enabling the vehicle to take off in 2nd gear and thus make it easy to take off on sandy or muddy terrain.

The electronic control system of the A343F and A340E are compared below.

System	Function	LX450	’96 SC300
		A343F	A340E
Shift Timing Control	The optimum shift pattern is selected from 2 shift patterns in the ECM by the pattern select switch. The ECM sends current to the solenoid valve No.1 and/or No.2 based on signals from each sensor and shifts the gear.	○	○
Lock–Up Timing Control	The optimum lock–up pattern is selected from 2 lock–up patterns in the ECM by the pattern select switch. The ECM sends current to the solenoid valve SL based on signals from each sensor and engages or disengages the lock–up clutch.	○	○
“N” to “D” Squat Control	When the shift lever is shifted from “N” to “D” range, the gear is temporarily shifted to OD and then to 1st to reduce vehicle squat.	○	○
Engine Torque Control	Retards the engine ignition timing temporarily to improve shift feeling during up or down shifting.	○	○
2nd Start System	Enabling the vehicle to take off in the 2nd gear and thus make it easy to take off on snowy, sandy or muddy terrain.	○	—
Self–Diagnosis	Causes the malfunction indicator lamp to turn on to inform the driver when the electrical circuit malfunctions.	○	○
Fail–Safe	Controls other normally operating components, permitting continued driving when malfunctions occur in the electrical circuit.	○	○

2. Construction

The configuration of the electronic control system in the A343F is as shown in the following chart.

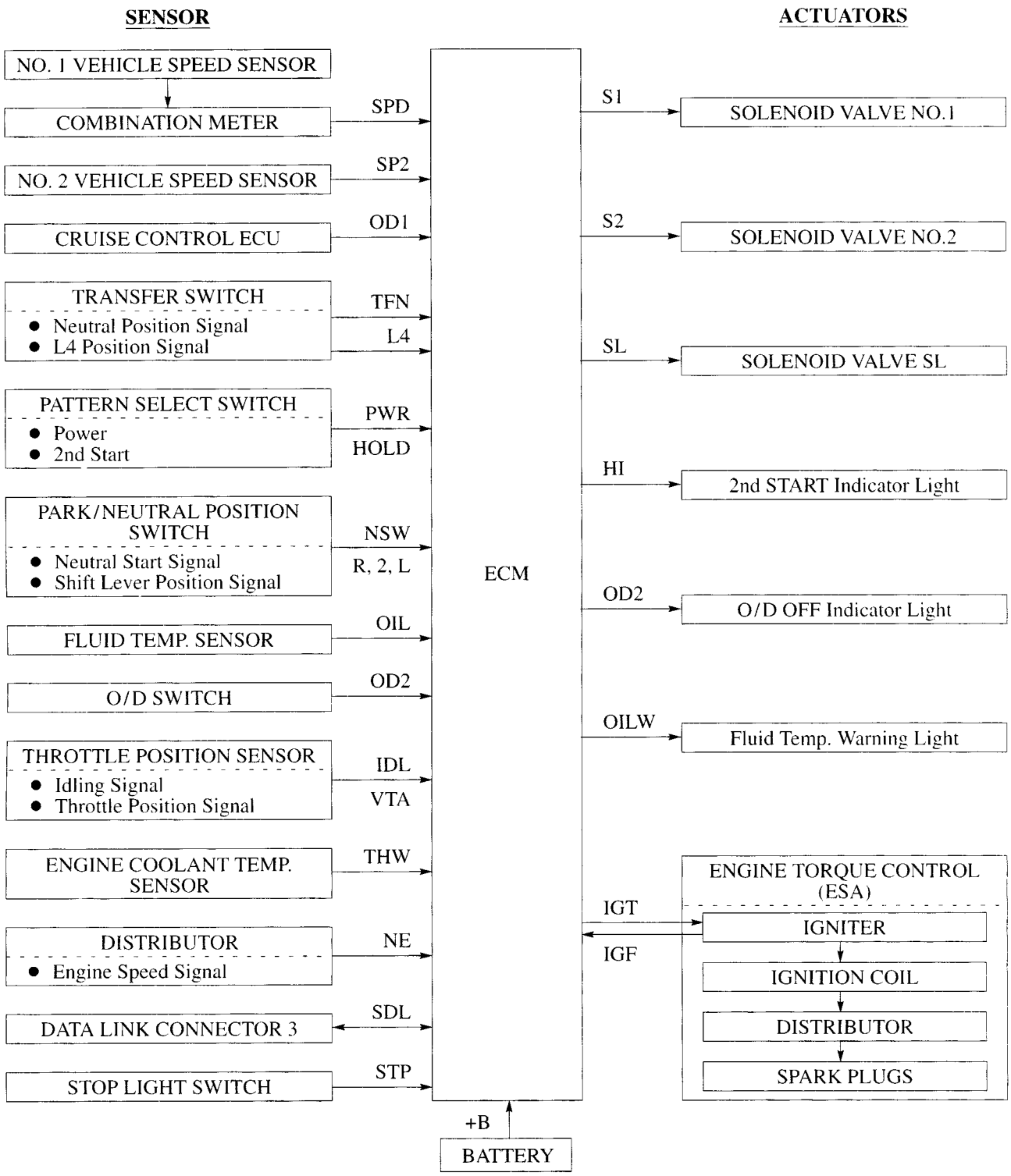

3. System Diagram

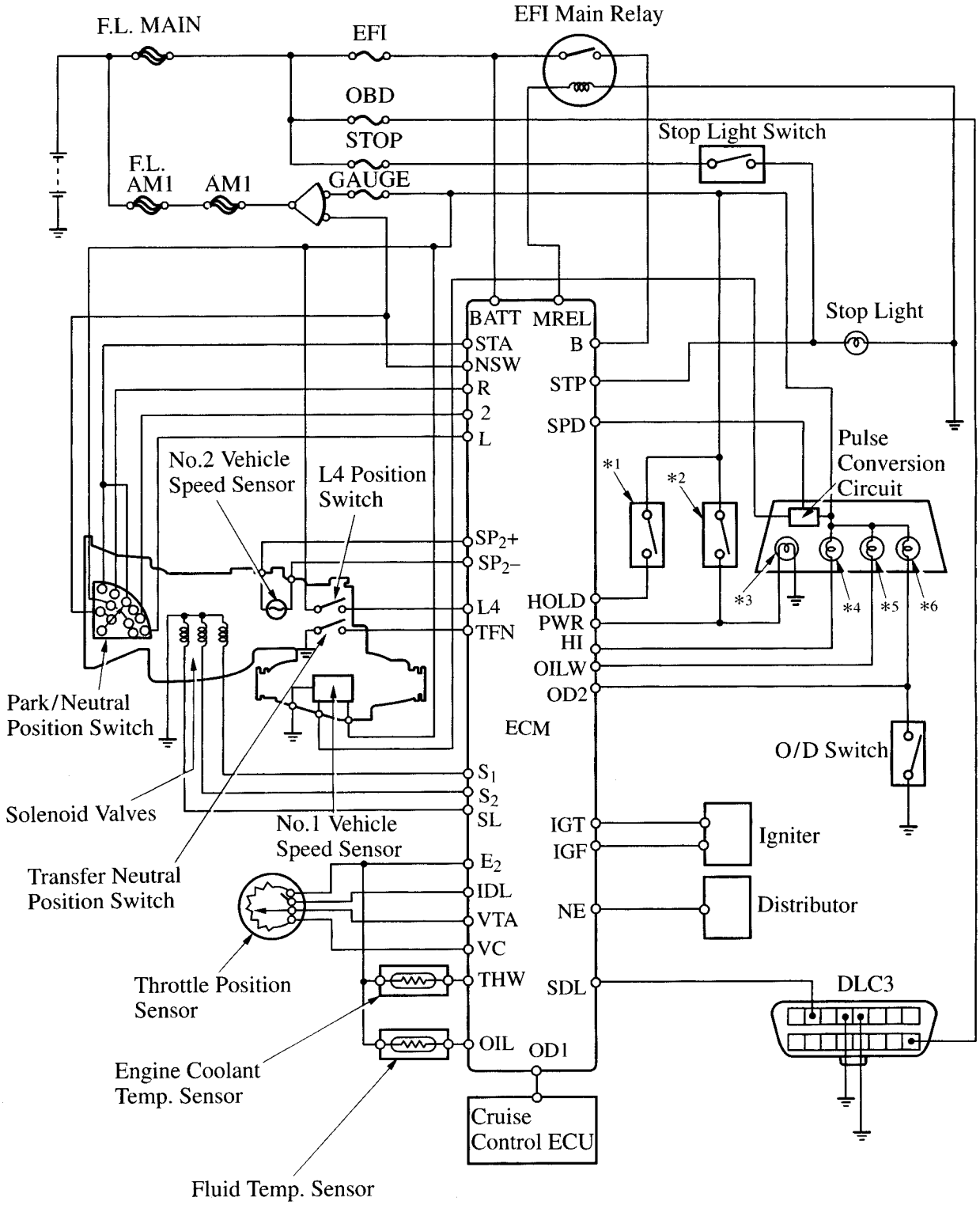

*1: Pattern Select Switch (2nd Start)
*2: Pattern Select Switch (Power)
*3: Pattern Indicator Light (Power)
*4: Pattern Indicator Light (2nd Start)
*5: Fluid Temp. Warning Light
*6: O/D OFF Indicator Light

4. Layout of Components

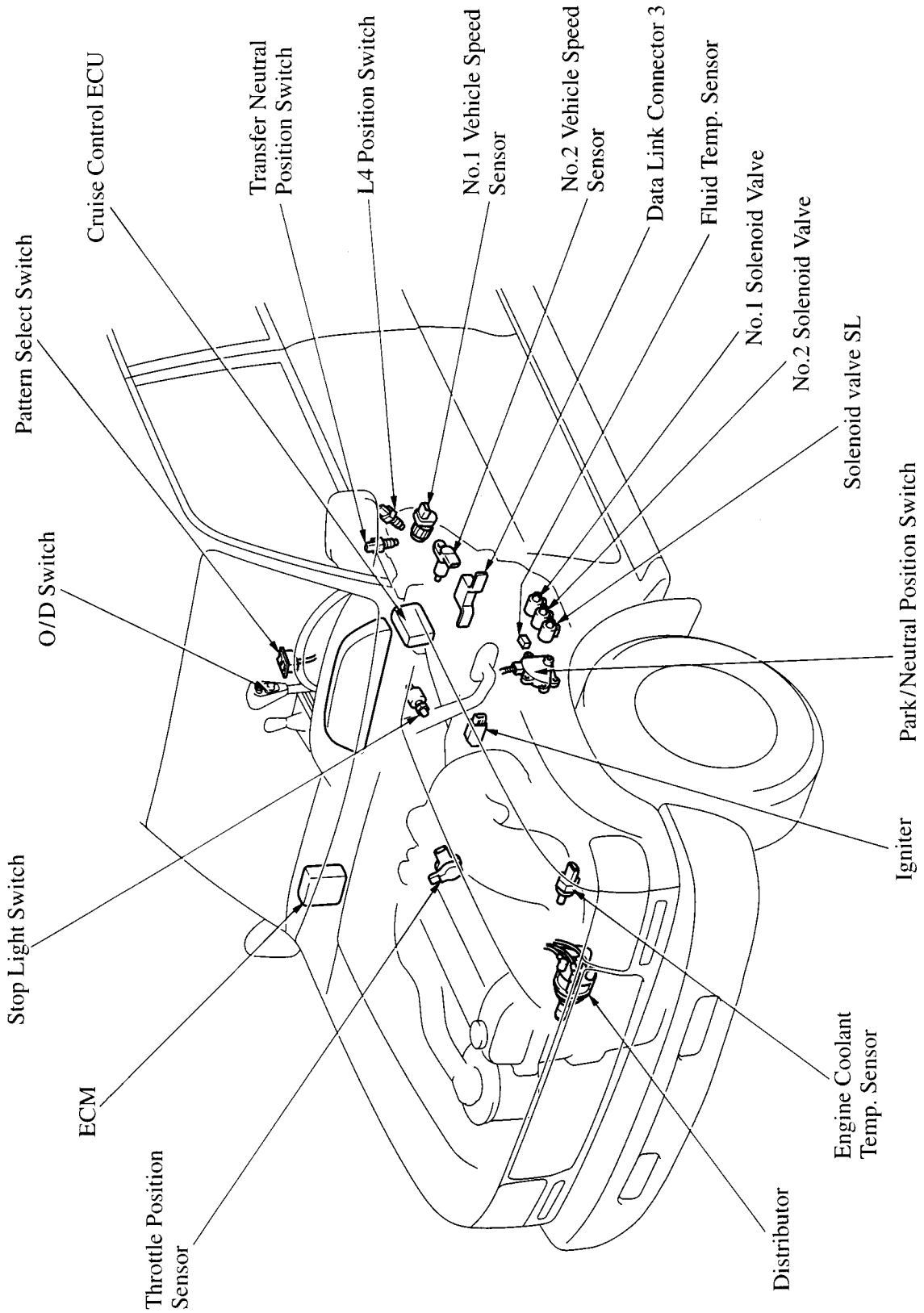

5. Function of ECM

2nd Start System

1) Outline

The 2nd start system enables the driver to use a pattern select switch to select the 2nd start mode, which allows the vehicle to take off in 2nd gear.

This system has been designed to make it easy for the vehicle to take off on sandy or muddy terrain.

2) Operation

- When the 2nd start mode is selected while the shift lever is in the “D” or “2” position, the vehicle can take off in the 2nd gear. After a take off, if the shift lever is in the “D” position, the transmission will shift up automatically into 3rd and overdrive gears, as usual. If the shift lever is the “2”position, the transmission will continue to operate in the 2nd gear.

- When a vehicle is allowed to take off in 2nd gear under the 2nd start mode, it accelerates more gently and provides better control. This also minimizes the fluctuation of the drive force transmitted to the tires, realizing a smoother take off with minimum slippage.

▶ Shift Program ◀

→: Up–Shift ←: Down–shift

Mode / Shift Lever Position	Normal, Power	2nd Start
D (O/D Switch ON)	1st↔2nd↔3rd↔O/D	1st↔2nd↔O/D
2	1st↔2nd←3rd	2nd←3rd
L	1st←2nd	←

3) Pattern Select Switch

- A 2nd start mode has been provided in the pattern select switch. It is a momentary type switch which turns on upon pressing and turns off upon pressing it again. Also, the 2nd start mode is canceled once the ignition switch is turned off and returns to the normal mode.

- The 2nd start mode is also canceled when the power mode is selected. Likewise, the power mode is canceled when the 2nd start mode is selected

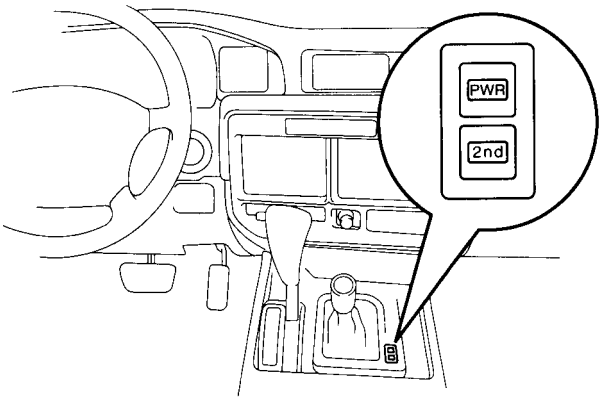

Pattern Select Switch

4) 2nd Start Indicator Light

A 2nd start indicator light, which turns on when the 2nd start mode is selected, is provided in the combination meter.

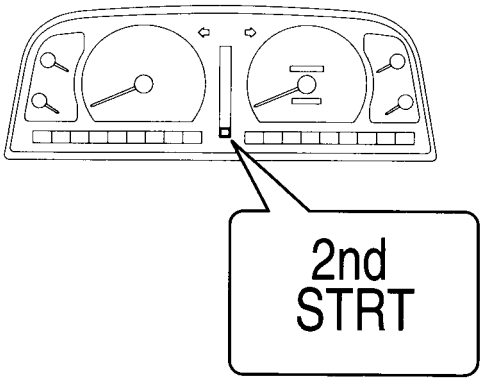

2nd Start Indicator Light

Fluid Temperature Warning Light

The fluid temperature warning light warns the driver if the automatic transmission fluid is becoming hot under prolonged high–load conditions such as driving over a high grade road. To detect if the temperature of the automatic transmission fluid is too high, the ECM uses a signal that is output by the fluid temperature sensor, which is attached to the oil cooler outlet union.

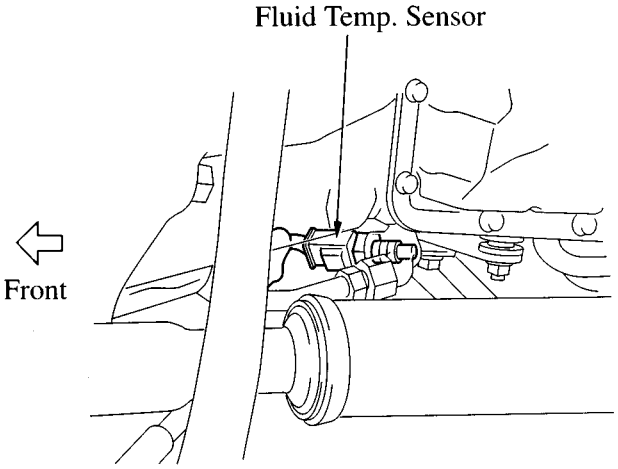

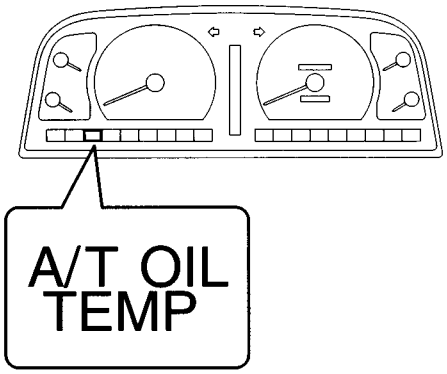

Fluid Temperature Warning Light

■ UNENGAGED "PARK" WARNING LIGHT

- If the transmission shift lever is moved to the "P" position while the transfer is in neutral, the transmission will not engage in "Park". The "Unengaged 'Park' Warning Light" has been provided to inform the driver of this fact.

- The park/neutral position switch determines the "P" position of the transmission shift lever and the transfer neutral position determines the "Neutral" position of the transfer. These switches are connected in series and when both switches are ON, the current flows to turn on the "Unengaged 'Park' Warning Light".

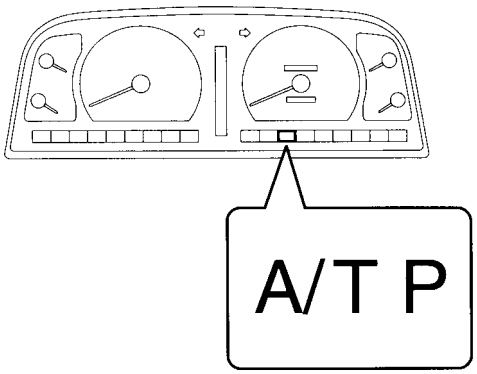

Unengaged "PARK" Warning Light

HF2AV TRANSFER

■ DESCRIPTION

The LX 450 uses HF2AV type full–time 2–speed transfer in which a center differential is enclosed. The center differential is equipped with a viscous coupling type LSD (Limited Slip Differential). In addition, a mechanism to mechanically lock the center differential when the transfer is shifted to “L” has been provided.

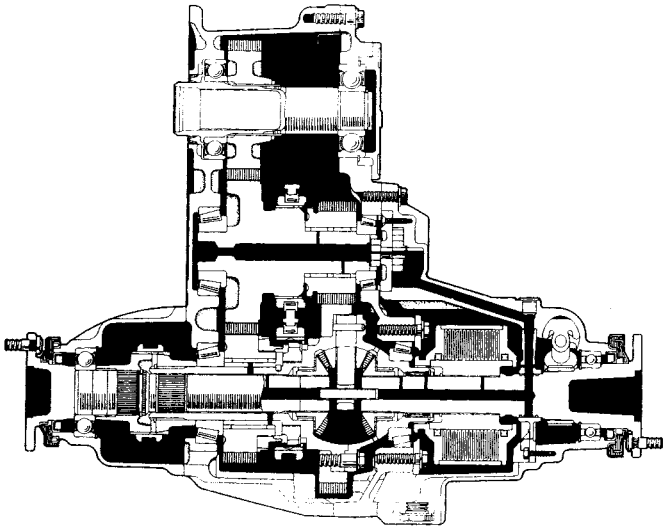

HF2AV Transfer

▶ Specifications ◀

Model		LX450
Transfer Type		HF2AV
Transmission Type Item		A343F
Reduction Gear Type		Idler Gear
Shift Control Type		Mechanically
Gear Ratio	High Speed Range	1.000
	Low Speed Range	2.488
Oil Capacity liter (US qts, Imp. qts)		1.7 (1.8, 1.5)
OIL Viscosity		SAE 75W–90
Oil Grade		API GL–4 or GL–S

■ TRANSFER GEARS

1. General

- The variable–speed gear for high or low speed is located on the idler gear and the output shaft.
- The shift mechanism is located in the idler gear and the output shaft.
- The center differential is located in the low speed gear on the output shaft.

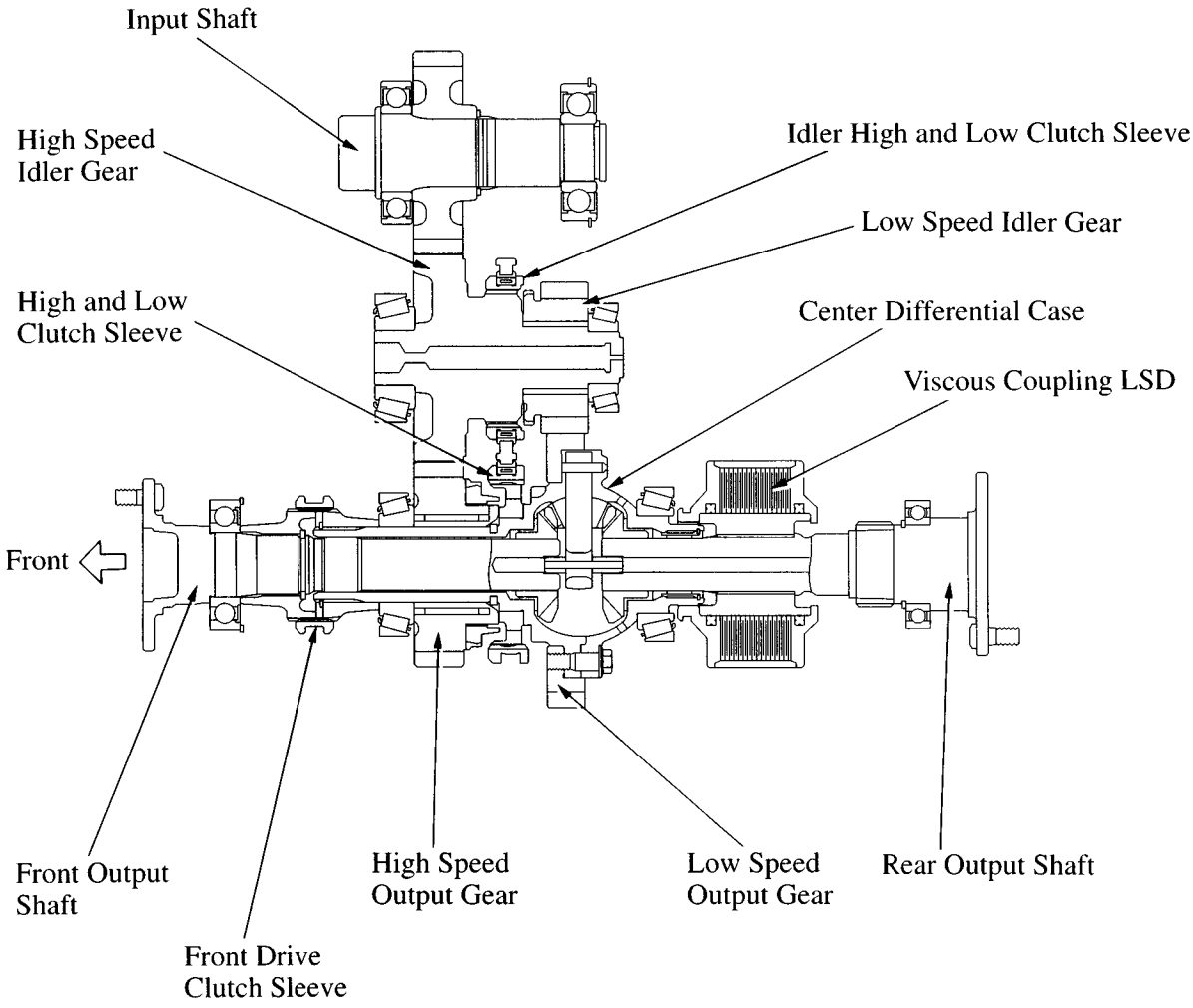

2. Power Transmission

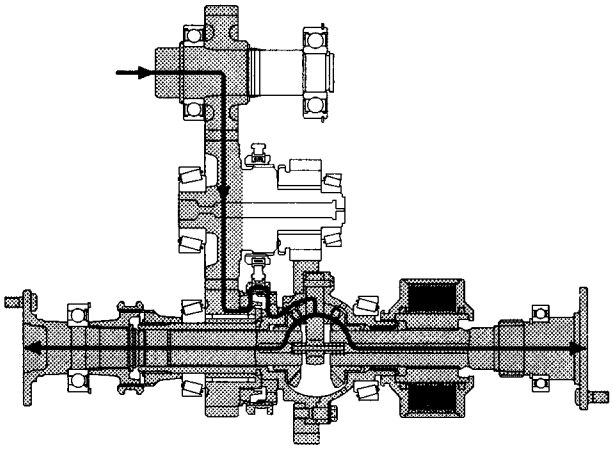

H Range

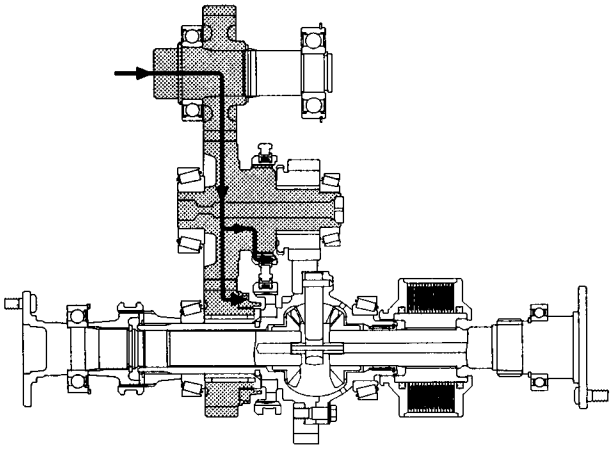

N Range

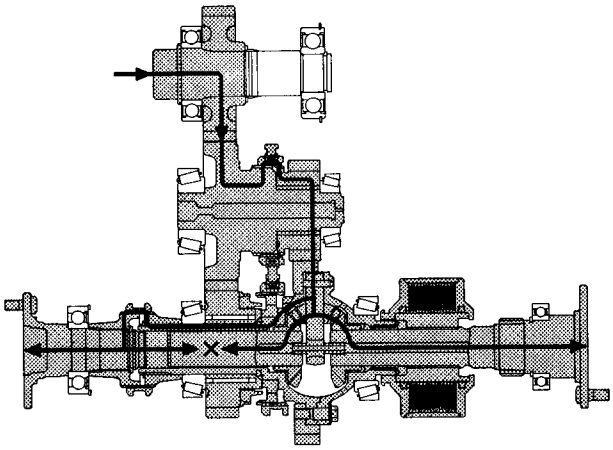

L Range

3. Construction

Gears

The height of the teeth on each gear is increased for quiet gear meshing.

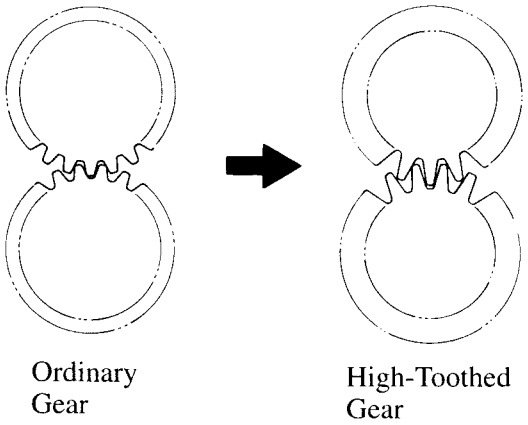

Bearing

- Sealed ball bearing are used for input shaft.
- Tapered roller bearings, having larger load capacity, are used on both sides of the idler gear and output shaft.
- Needle bearings are used for each gear bearings.

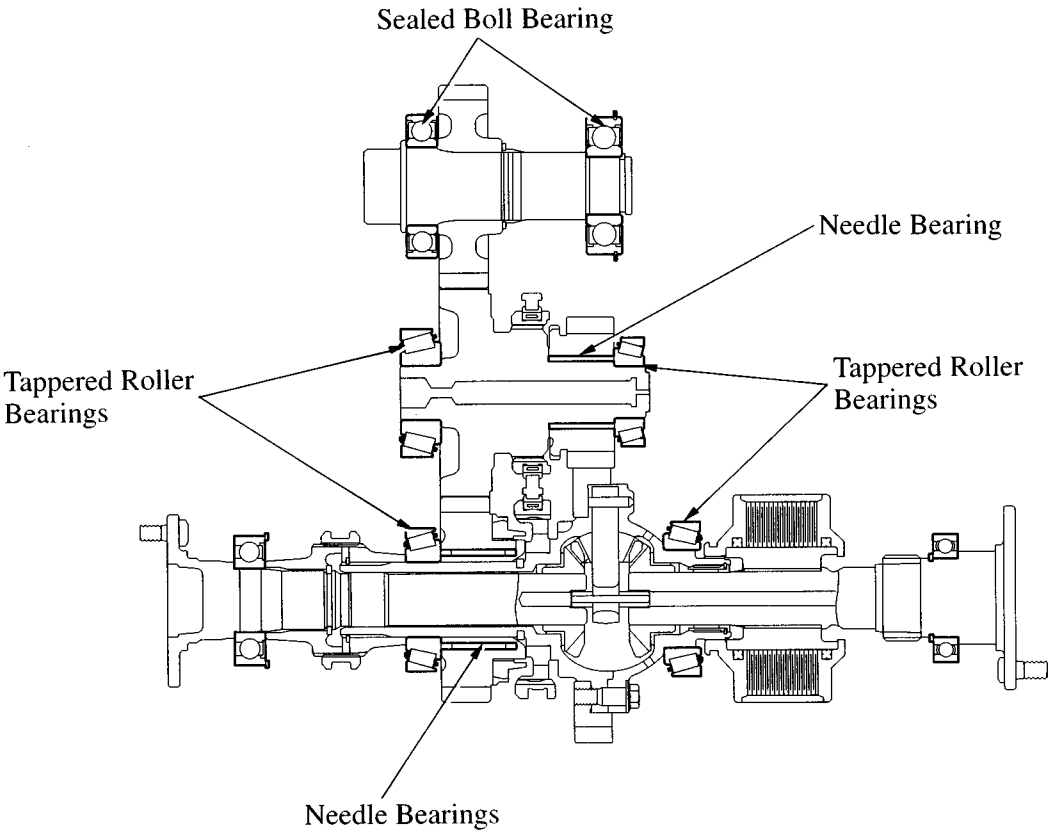

■ SHIFT MECHANISM

- Shifting between the “H” and “L” ranges is accomplished by sliding the shift fork No.1 shaft and the shift fork No.1, which are linked to the transfer shift lever.
- In the shift fork No. 1 shaft, there are 3 grooves. A detent ball is inserted in the groove and pushed down by a spring. This prevents the gears from jumping out and gives a good shift feeling.
- The shift fork No.2 for the center differential lock is moved by the shift actuator. For details, see page 70.

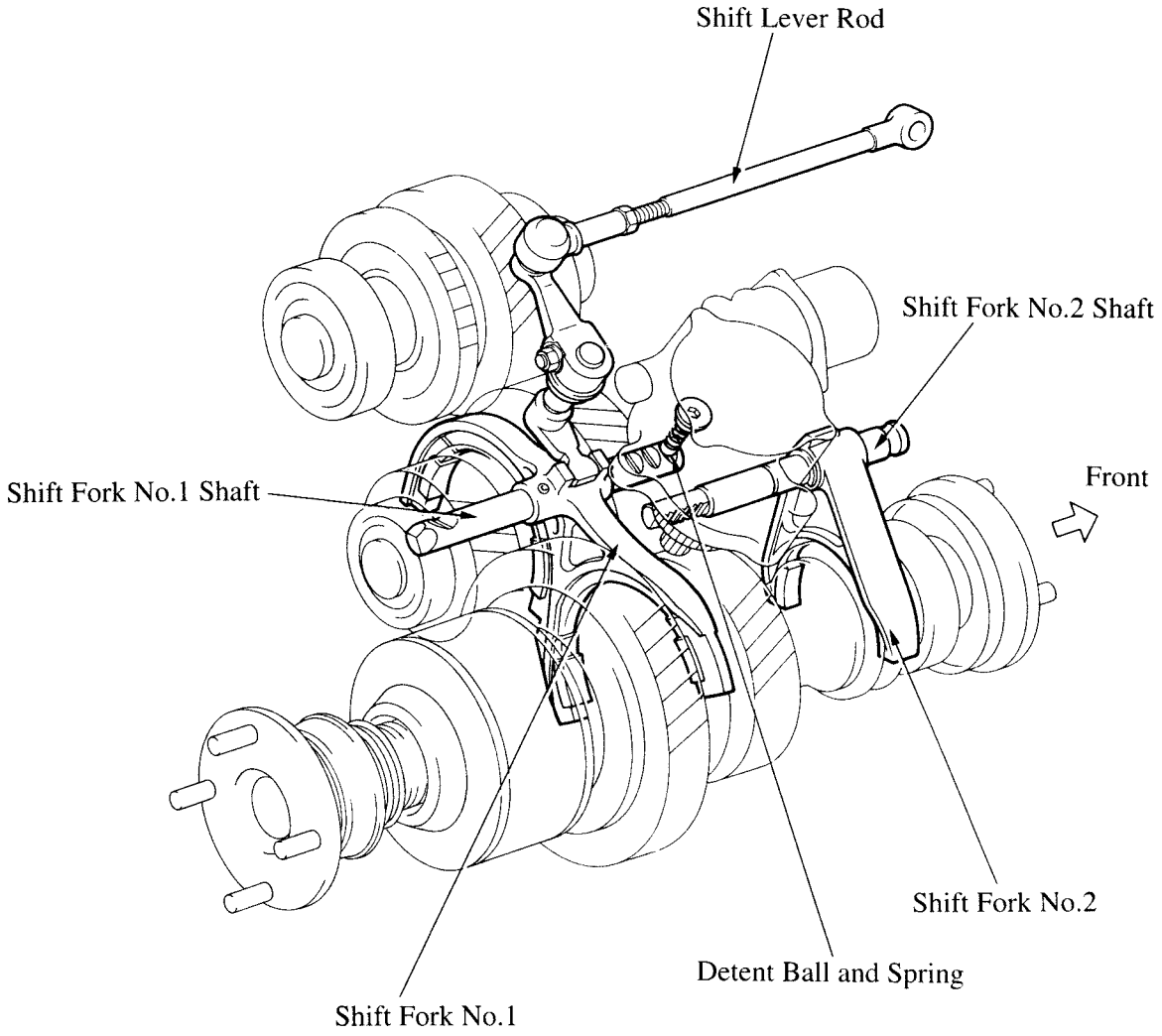

■ CENTER DIFFERENTIAL

1. Center Differential Case

The center differential case is a split–in–two type and is combined with the low speed output gear set bolts.

The clutch hub spline piece which transmits power to the case from the high speed output gear and the front drive gear piece for locking the differential are splined in the center differential front case. The center differential front case is assembled on the transfer front case via tapered roller bearing. The center differential rear case is assembled on the transfer rear case via a tapered roller bearing as in the front case.

2. Center Differential Gear Unit

The center differential gear unit consists of two pinion gears, a pinion shaft and two side gears. The center differential front side gear transmits power to the front output shaft. The center differential rear side gear transmits power to the rear output shaft.

During straight line driving, when there is no speed difference between front and rear wheels, the center differential pinion gears do not revolve. When a speed difference between the front and rear wheels occurs due to cornering, etc., the center differential pinion gears revolve absorbing the speed difference.

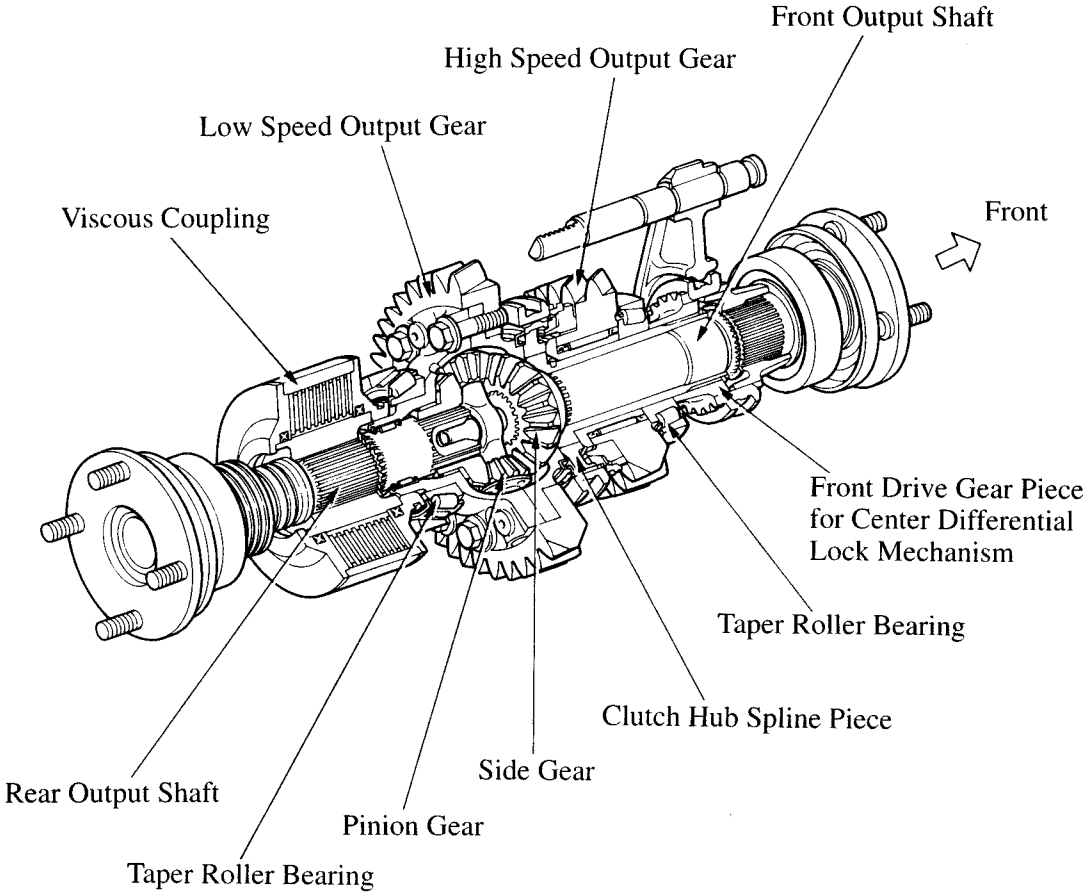

3. Viscous Coupling Type LSD

General

Making use of the highly viscous property of silicon oil, the viscous coupling type LSD utilizes the force that is generated when the silicon oil is sheared to accomplish limited slip in the differential. This enables the differential to restrain the rotational difference between the front and rear wheels, thus providing the excellent vehicle's driving performance over slippery terrain such as rough or snowy roads.

Construction

1) Outer and Inner Housing

Using splines, the outer housing is connected to the center differential case, and inner housing to the rear output shaft respectively.

2) Outer and Inner Plates

The outer and inner plates are steels disks that are assembled alternately. Outer plates have teeth along their periphery that mesh with inner splines of the outer housing. Inner plates have teeth along their inner edge which mesh with the splines of the inner housing and slide to right and left along the inner housing. Slits are provided on outer and inner plates to increase the resistance force of the oil.

3) Spacer Ring

Spacer rings are inserted between the outer plates to maintain the necessary clearance.

4) Silicone Oil

Silicone oil expands with heat. Therefor, silicon oil is filled approximately 80 percent of the housing.

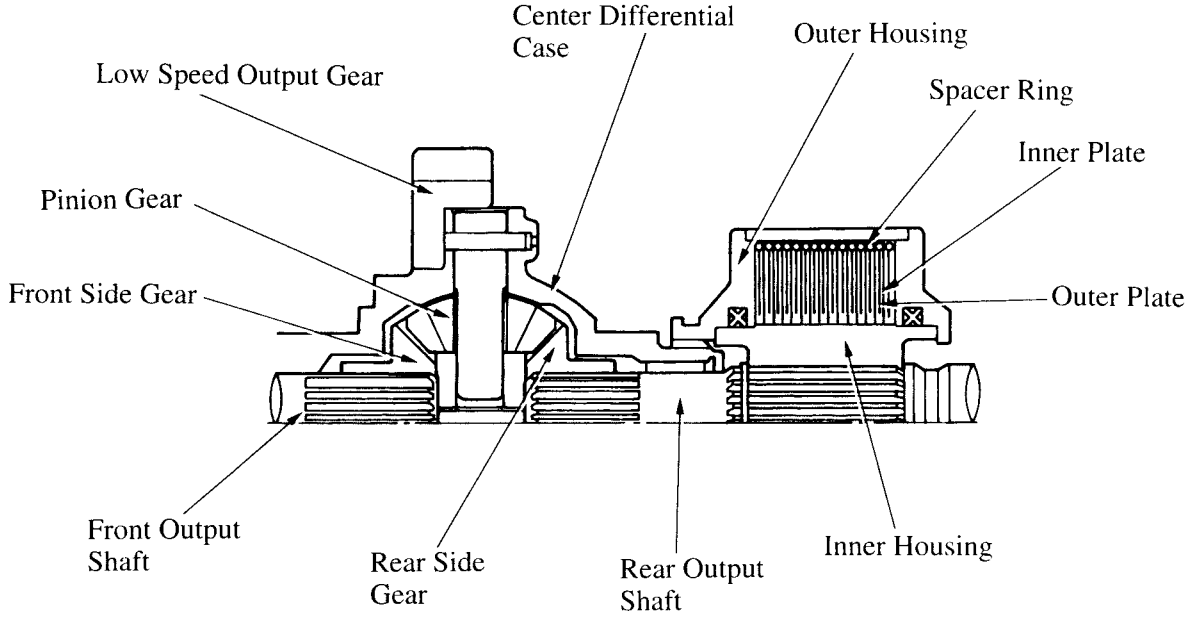

Fundamentals

Torque is transmitted by a resistance force which is caused by its viscosity when silicone oil is sheared.

1) When Plates Rotate at an Identical Speed

No viscous resistance is generated since silicone oil between two plates rotates at the same speed as the plates.

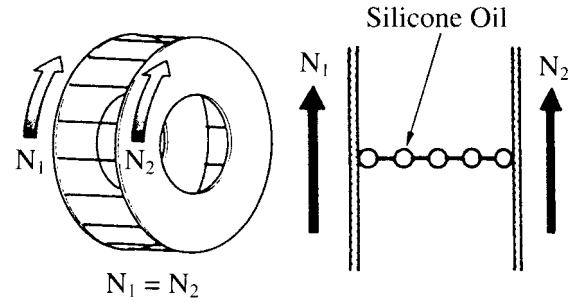

2) When Plates Rotate at Different Speeds

Silicone oil particles that are touching plates tend to move at the same speed as the plates.

When the plates begin to turn at different speeds, silicone oil particles are pulled away from each other and a resistance force is generated. Therefore, resistance F_2 acts in the opposite direction of rotation on plate N_2 which is rotating faster. Resistance F_1, which is equal to F_2, acts in the direction of rotation on plate N_1 which is turning at a lower speed.

Forces which tend to cancel the difference in speed occur to the plates.

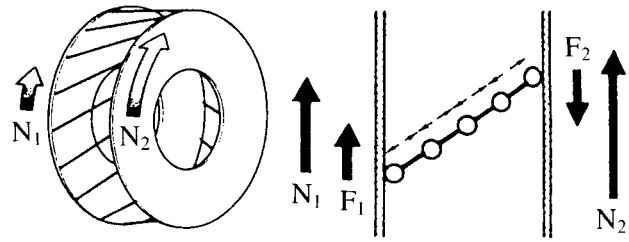

Transmitted Torque Characteristics

1) During Normal Operation

The amount of viscous resistance due to difference in rotation of the outer and inner plates increases or decreases according to the extent of its difference.

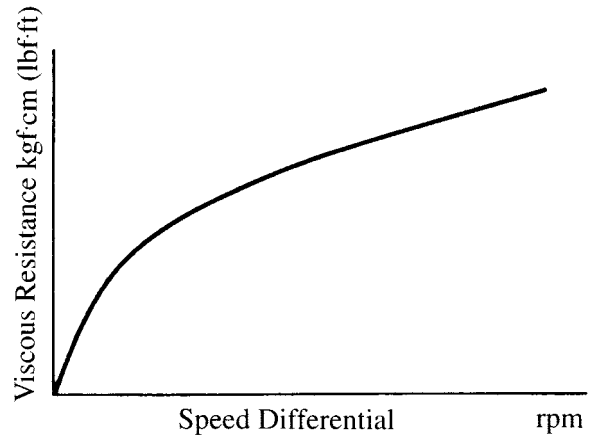

2) During Humping

The viscous coupling is filled with silicone oil and air. The air is mixed in the silicone oil in the form of bubbles when the viscous coupling is operating. The bubbles absorbed the pressure difference is generated on both sides of the inner plate as it rotates.

As the viscous coupling continues to operate with the outer and inner plates rotating at different speeds, the temperature inside the viscous coupling increases due to agitated resistance of the silicone oil. And the silicone oil expands under heat.

As the silicone oil continues to expand, the bubbles in the silicone oil are caused to be decreased so that the pressure difference at the front and back of each inner plate is no longer absorbed by the bubbles.

The inner plate, which can move in an axial direction to a distance equal to the outer diameter of the spacer ring fitted between the outer plates, is pulled toward the side where pressure is lower. As a result, the inner plate contacts the outer plate directly to create a larger resistance. This condition is called humping.

Since there exists no speed difference between the inner and outer plates during humping, the temperature inside the viscous coupling decreases and reduces the internal pressure. The compressed bubbles expand again and separate the inner plate from the outer plate. Humping, however, does not occur when the vehicle is running in a normal condition.

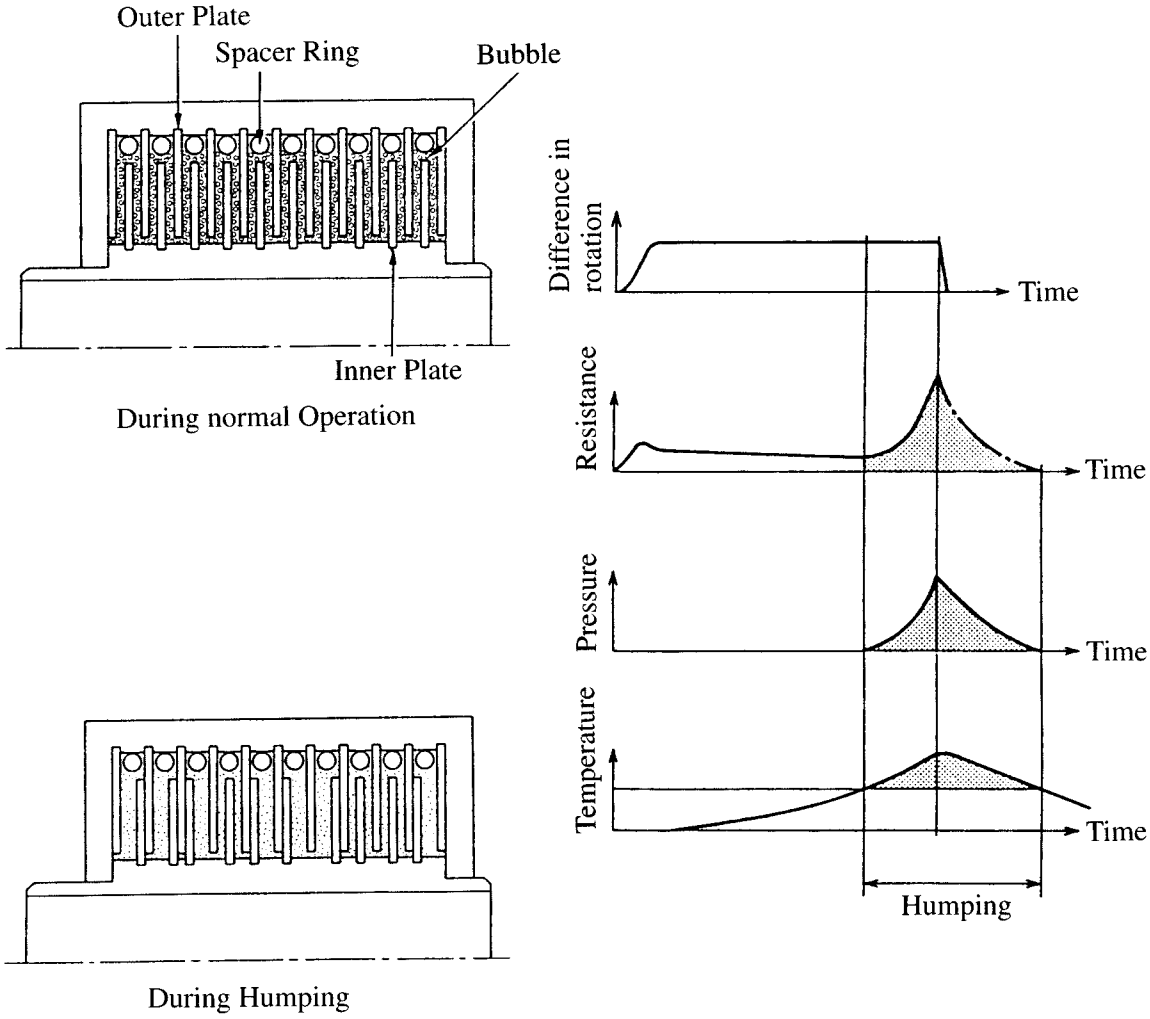

Operation

When a rotational difference is created between the front and rear wheels due to slippage, torque is transmitted by the viscous coupling from the high–speed wheels to the low–speed wheels, thus reducing the rotational difference. As a result, optimal torque is transmitted constantly to the wheels.

1) When the Rear Wheel Rotates Faster than the Front Wheel

When the rear output shaft rotates faster than the differential case, this difference in rotation generates viscous torque. This torque, along with the drive torque from the transfer is distributed to both the front and rear output shaft. As a result, the drive torque of front output shaft side, which does not have a viscous coupling, increases by the amount of the viscous torque. The drive torque of the rear output shaft, which is connected to the viscous coupling, decreases by the amount of viscous torque generated.

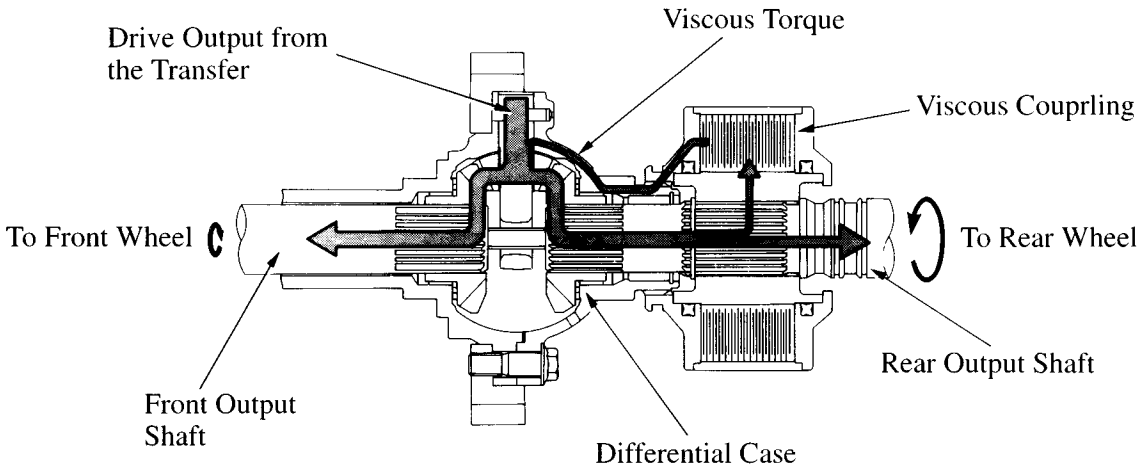

2) When the Rear Wheel Rotates Slower than the Front Wheel

When the rear output shaft rotates slower the differential case, this difference in rotation generates viscous torque. This decreases the drive torque transmitted from the transfer to the differential and is apportioned to both wheels. As a result, drive torque decreases in the front output shaft which has no viscous coupling. Conversely, the viscous torque form the viscous coupling is added to the drive torque of the rear output shaft.

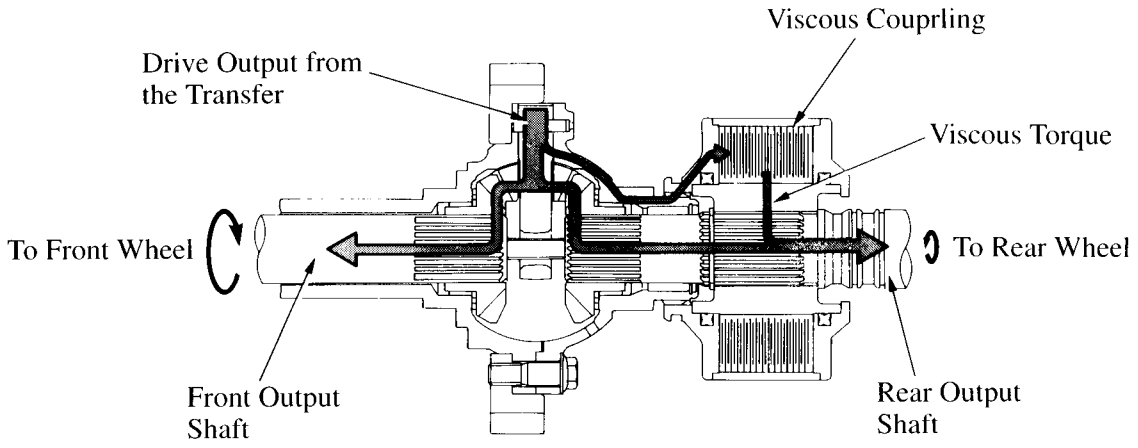

4. Center Differential Lock Mechanism

General

The center differential lock mechanism locks the center differential mechanically to stop the difference in rotation between the front and rear wheels. The differential locks automatically only when the transfer is in the “L” position.

Layout of Electrical Components

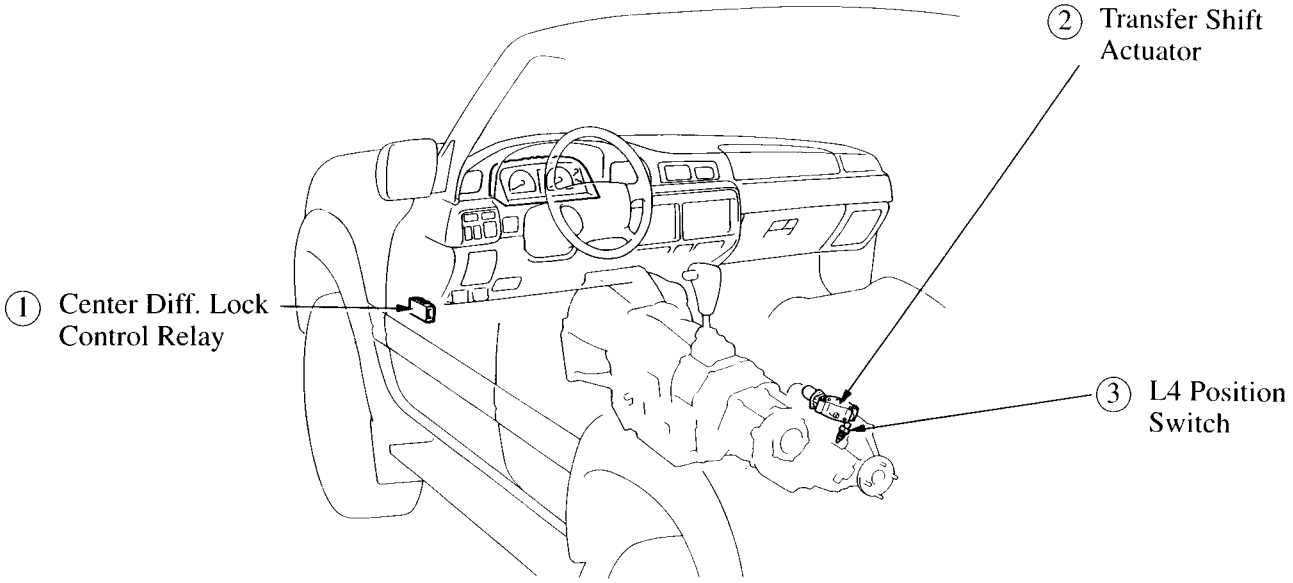

Function of Electrical Components

No.	Component	Function
①	Center Differential Lock Control Relay	Changes the center differential operation according to the conditions L4 Position Switch.
②	Transfer Shift Actuator	Drives the motor and changes the center differential operation (Free and Lock) in accordance with signals from the Center Differential Lock control relay.
③	L4 Position Switch	Detects the transfer shift lever position (H or L).

Wiring Diagram

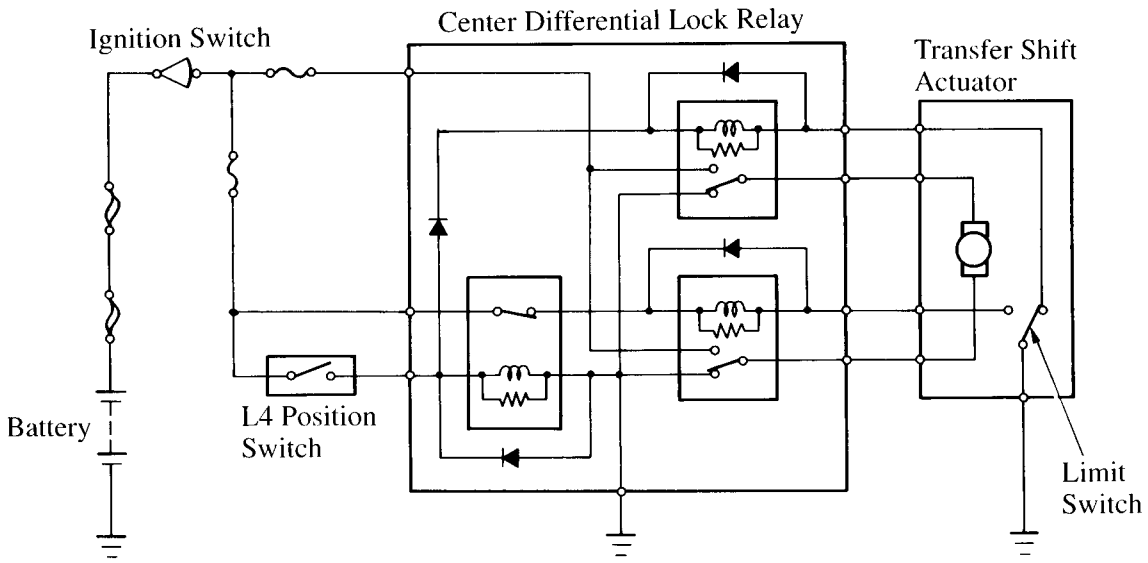

Construction and Operation of Electrical Components

1) L4 Position Switch

This switch is mounted on the top of the transfer rear extension housing. When the transfer shift lever is in the “H” position, the end of this switch fits in a groove in the high and low shift fork shaft.

Since the internal contact points are open, the switch is off at this time. If the transfer shift lever is shifted to the “L” position, the high and low shift fork shaft slides and pushes up the end of the switch, closing the contacts. This turns the switch on.

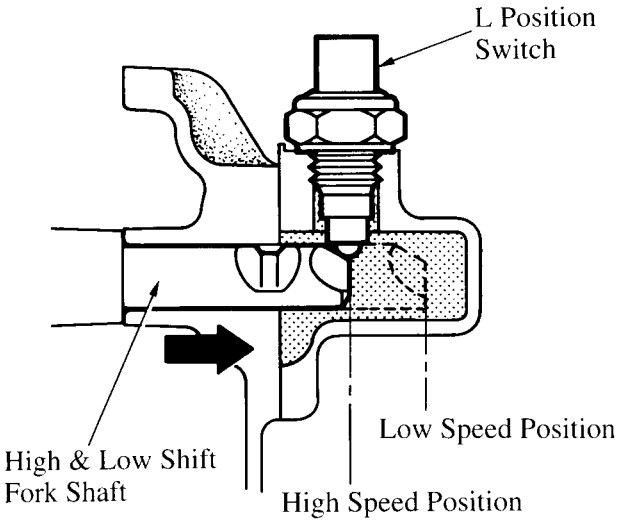

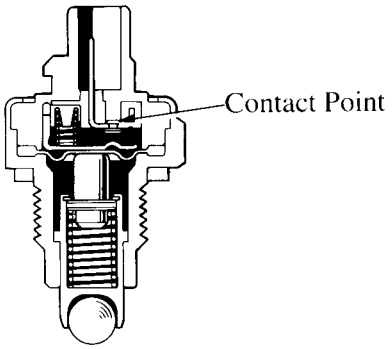

L Position Switch

2) Transfer Shift Actuator

The transfer shift actuator is mounted on the top of the transfer front case. This actuator consists of gears which convert the rotation of the motor to the sliding motion of the shift fork shaft, a limit switch to control rotation of the motor and other components.

The motor rotates by the signals from the Center Differential Lock control relay. This rotation transferred in the order form the drive gear, driven gear, idler gear and to the shift fork shaft. Thus the shift fork shaft slides, shifting the front drive clutch sleeve.

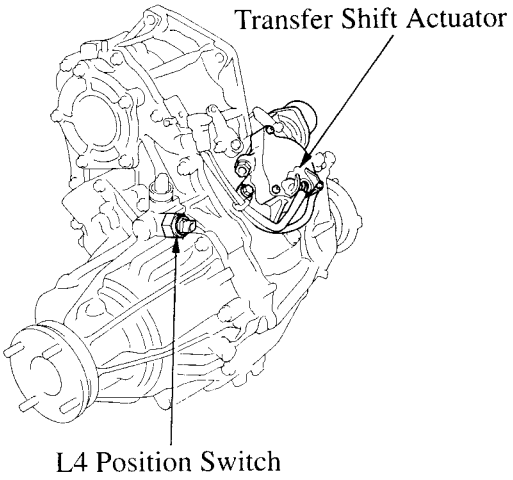

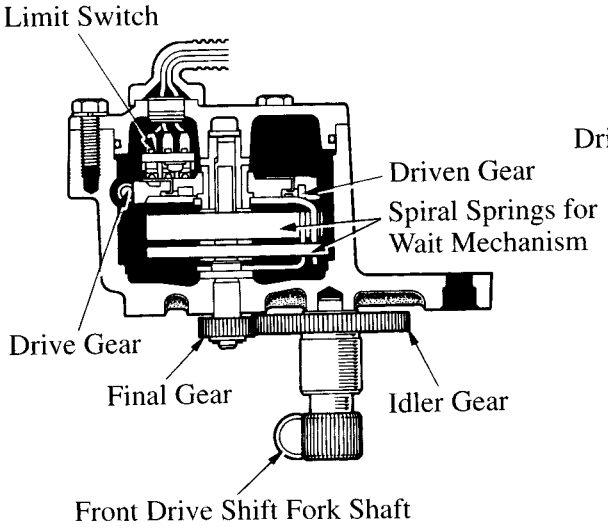

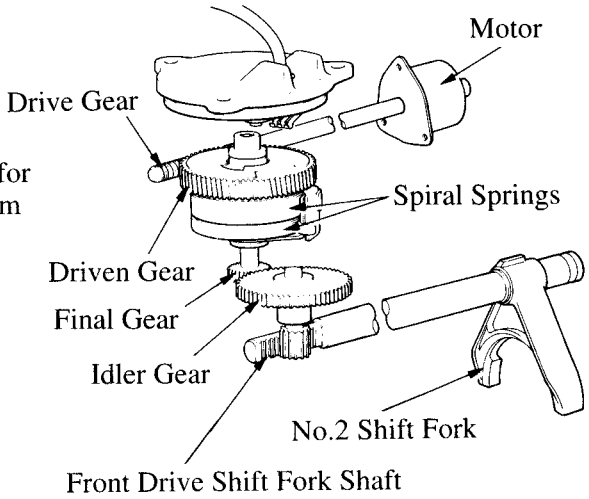

a. Motor Control Limit Switch

This limit switch consists of a contact plate mounted on the side of the driven gear and contact springs mounted in the actuator case.

A notch is provided on the contact plate and the contact plate slides on the contact spring together with the rotation of the driven gear.

In this way the connection state of the contact springs changes, causing the motor to stop always in the optimum position.

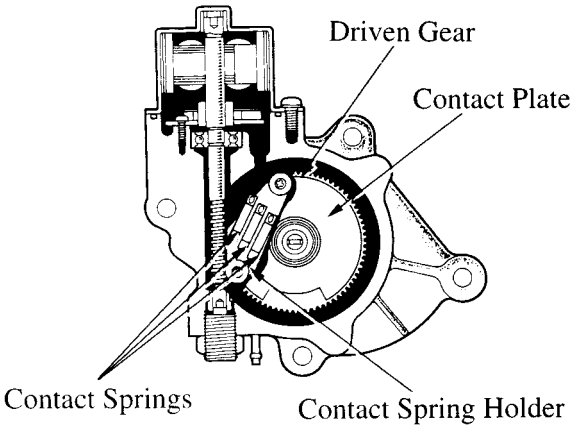

b. Wait Mechanism Spiral Spring

If the operating resistance of the shift fork shaft is large, the motor force is partially stored in these spiral springs. Afterward, when the operating resistance is reduced, the spring force causes the shift fork shaft to slide. Two spiral springs are included in the wait mechanism, one for shifting form “Free” to “Lock” and the other for shifting from “Lock” to “Free”.

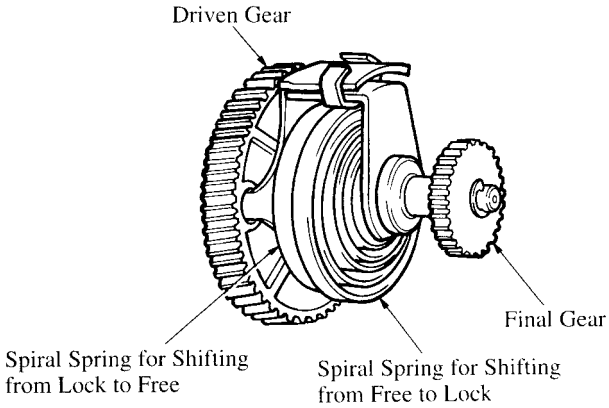

3) Center Differential Lock Control Relay

When the center differential control relay determines that the L4 position switch is ON and the the transfer shift lever is shifted in the “L” position, the relay activates the transfer shift actuator causing the center differential to lock. When the transfer shift lever is shifted to the “H” position, the L4 position switch is turned off freeing the center differential.

5. Center Differential Lock Indicator Light

General

A center differential lock indicator switch is mounted on the top of the transfer front extension housing. It turns on in the “Lock” condition and lights up the center differential lock indicator light located on the combination meter.

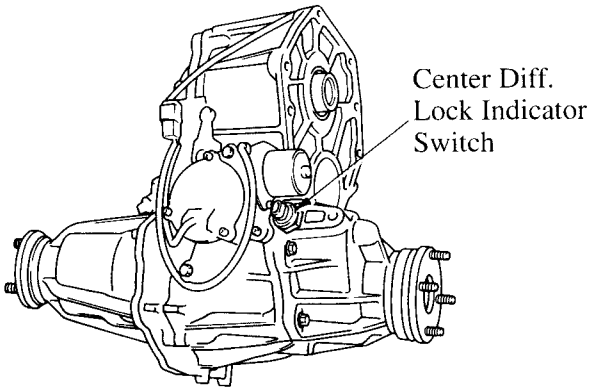

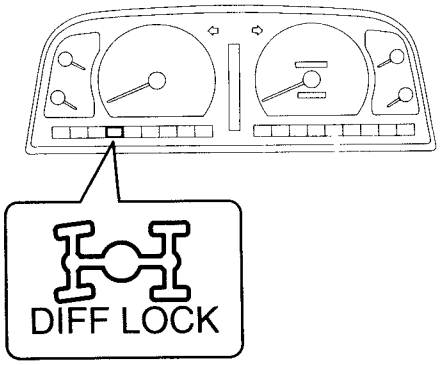

Center Differential Lock Indicator Light

Center Differential Lock Indicator Switch

The operation of this switch is the same as in the L position switch for the center differential lock mechanism. This switch goes on or off in accordance with the motions of the center differential lock shift fork shaft. It goes on when the transfer is shifted to the center differential "Lock" position.

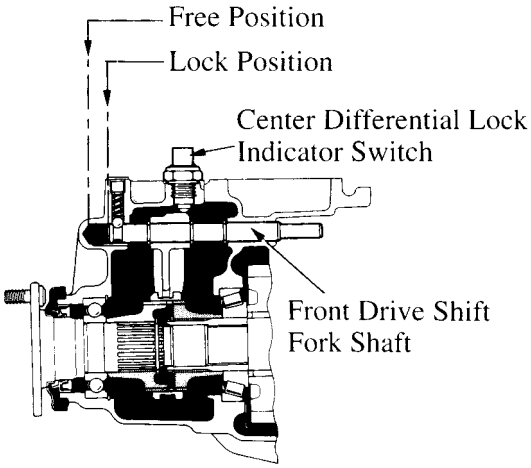

■ LUBRICATION

1. General

The transfer has an internal trochoid pump.

Oil pumped form the oil pump flows through the high speed idler gear, rear output shaft and front output shaft, the bearings and other components.

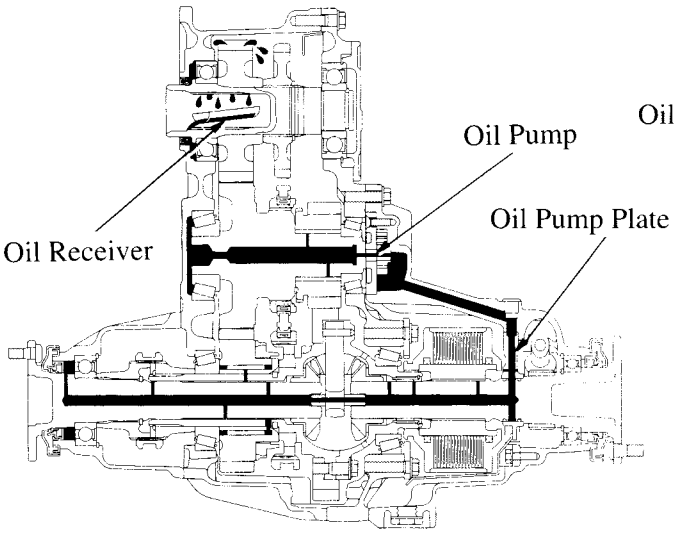

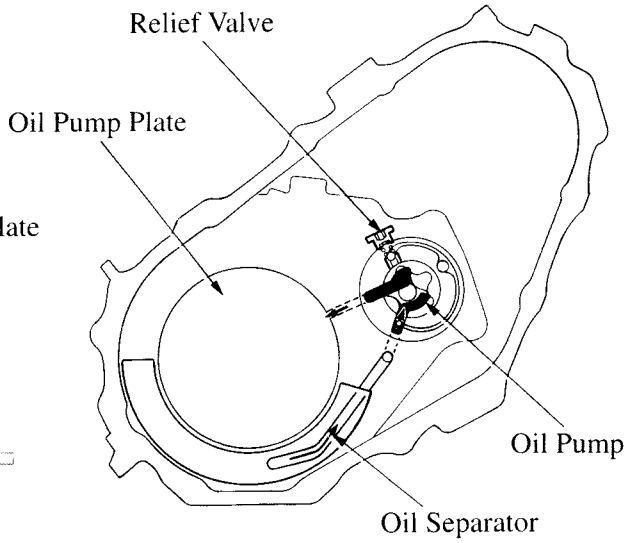

2. Oil Pump

The oil pump is driven by the speed idler gear.

A relief valve is built into the oil pump to prevent the oil pressure form becoming abnormally high.

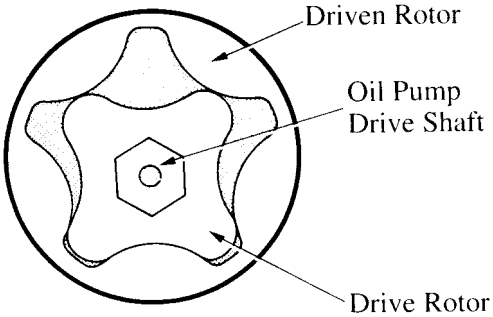

Oil Pump

PROPELLER SHAFT

■ DESCRIPTION

A 2–joint 1–part Hooke's universal joint is used for the front and rear propeller shafts.

Two types of the rear propeller shafts are used depending on the parts supplier.

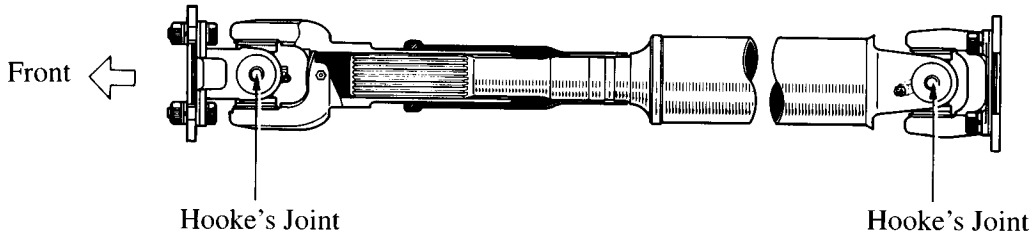

Front Propeller Shaft

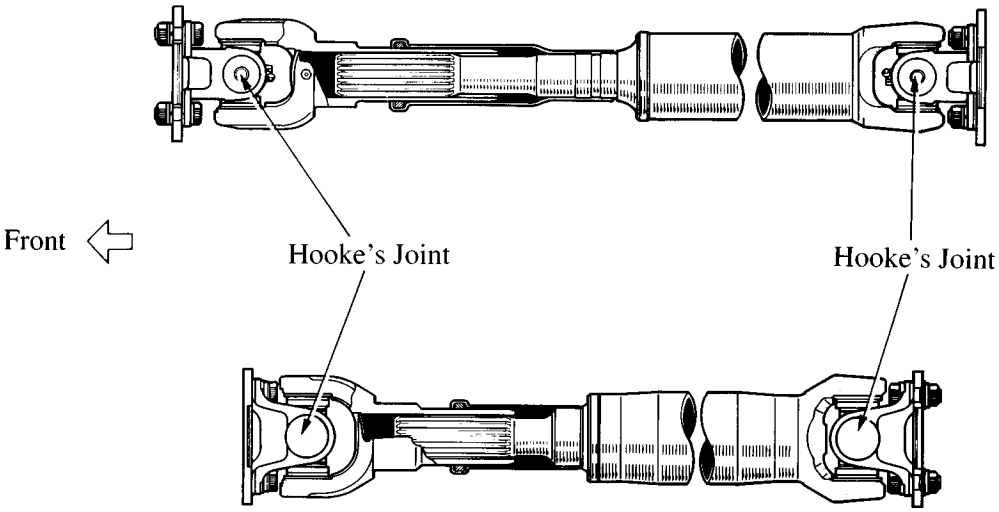

Rear Propeller Shaft

DIFFERENTIAL

■ DESCRIPTION

- The front differential uses an 8–inch ring gear and the rear differential uses a 9.5–inch ring gear.
- The Differential Lock Mechanism is available as an option for both front and rear differential.

▶ With Differential Lock Mechanism◀

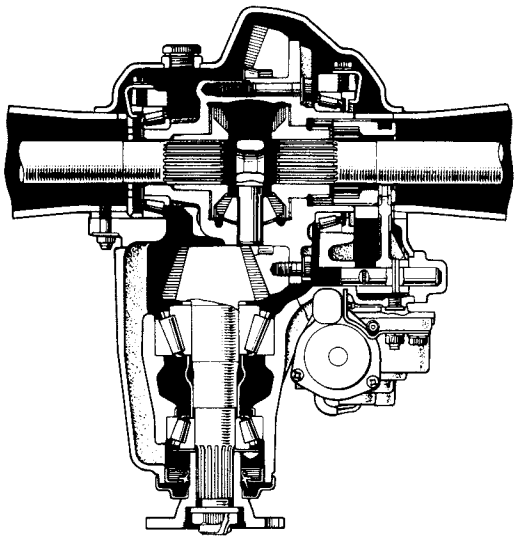

Front Differential

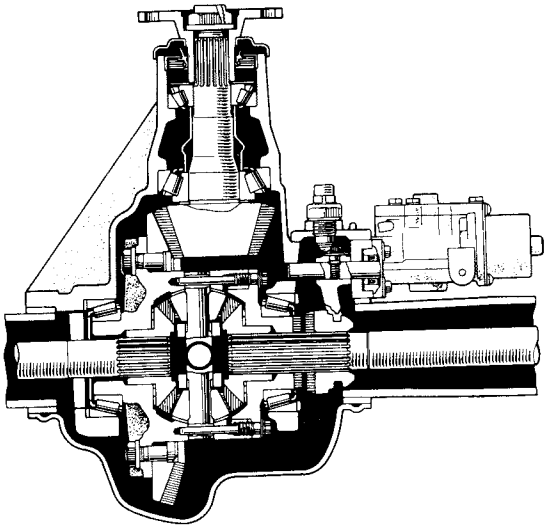

Rear Differential

▶ Specifications ◀

Differential Item	Front	Rear
Ring Gear Size in.	8”	9.5”
Reduction Gear Ratio	4.100	←
Number of Differential Pinions	2, 4*1	←
Oil Capacity liters (US qts, Imp. qts)	2.65 (2.8, 2.3)*1, 2.8 (2.9, 2.5)	3.25 (3.4, 2.9)
Oil Viscosity	SAE 90*2 SAE 80W OR 80W–90*3	←
Oil Grade	API GL–5	←

*1 With differential lock mechanism

*2 Temperatures above –18°C (0° F)

*3 Temperatures below –18°C (0° F)

■ FRONT DIFFERENTIAL

A reverse offset type hypoid gear is used in the front differential. As a result, the joint angles (θ_1 and θ_2) of the front propeller shaft universal joint can be made almost equal and that contributes to the reduction of noise and vibration.

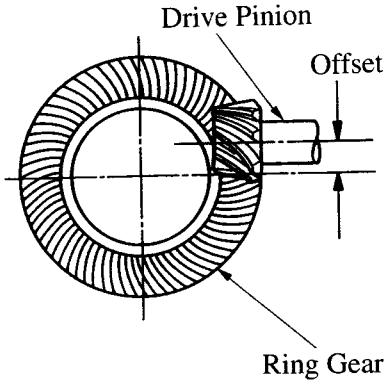

LX450
(Reverse Offset Type)

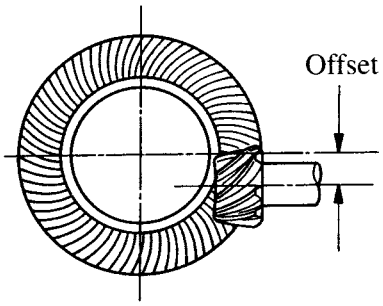

Conventional Type

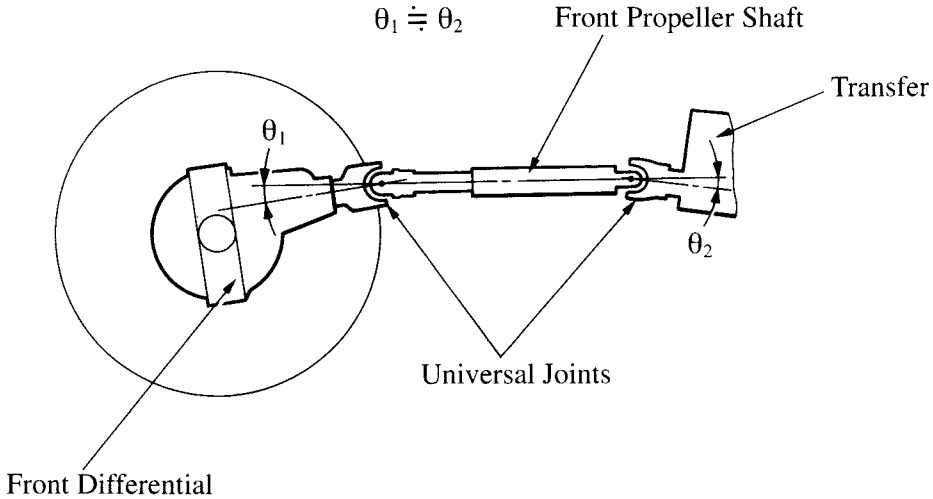

■ DIFFERENTIAL LOCK MECHANISM

1. Front Differential

Construction

The right side differential case boss has been provided with splines which mesh with the sleeve, which has both inner and outer splines. The sleeve slides the boss by way of the differential lock actuator attached to the outside of the differential carrier. Also, the outer tip area of the side gear boss has been provided with splines which mesh with the inner splines of the sleeve.

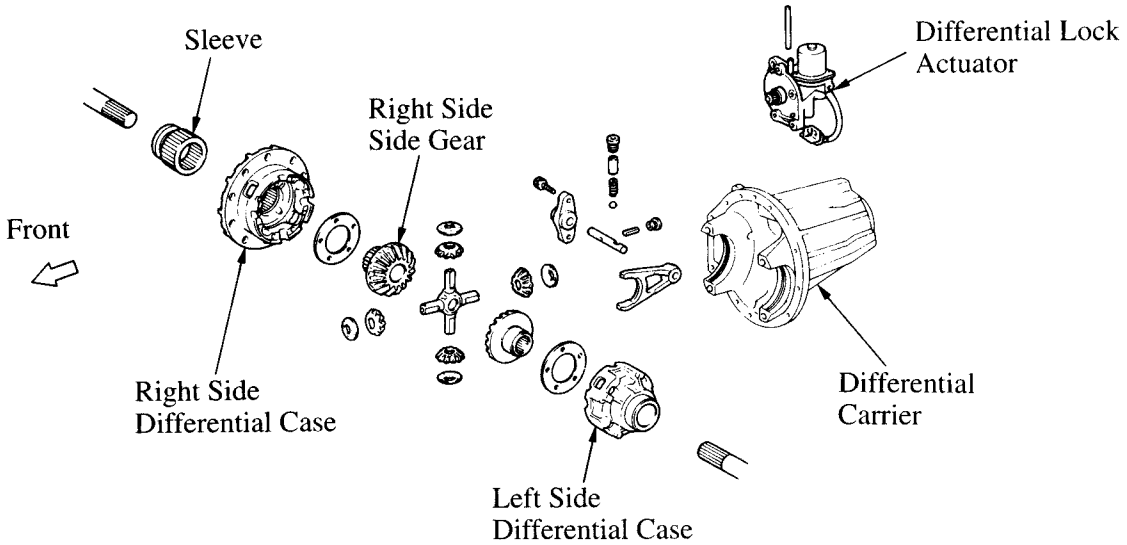

Operation

1) Differential Lock not Engaged

When the differential lock switch is OFF, the differential lock actuator is not activated. Therefore, the sleeve remains at the right side of the illustration on the right without engaging with the right side gear. It will thus operate normally as a conventional differential gear.

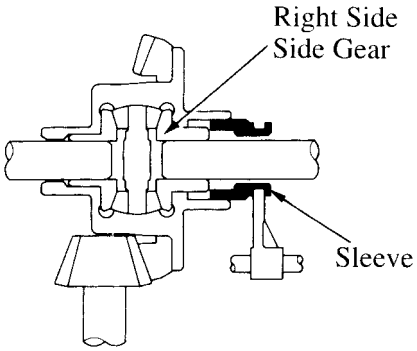

2) Differential Lock Engaged

When the differential lock switch is ON, the differential lock actuator slides the sleeve toward the left and meshes with the right side side gear.

Accordingly, the differential case and side gear are locked by the sleeve to provide differential control.

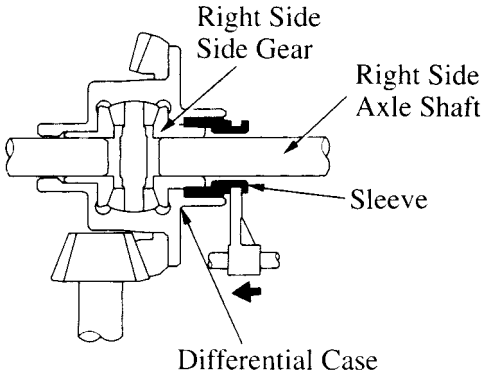

2. Rear Differential

Construction

The splined area of the right side axle shaft has a sleeve. This sleeve and the differential case have been provided with teeth to function as a dog clutch. The sleeve meshes with the axle shaft by way of the splines and slides over the axle by way of the differential lock actuator attached to the differential carrier.

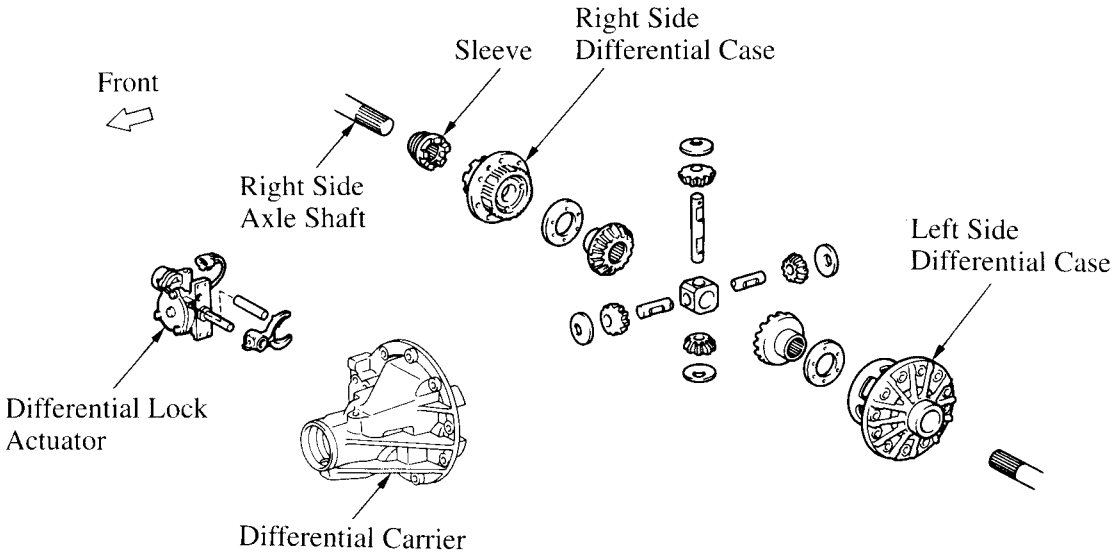

Operation

The basic operation is the same as the front differential. However, the relative rotation of the differential case and the side gear have eliminated in the rear differential during differential lock by way of the right side axle shaft.

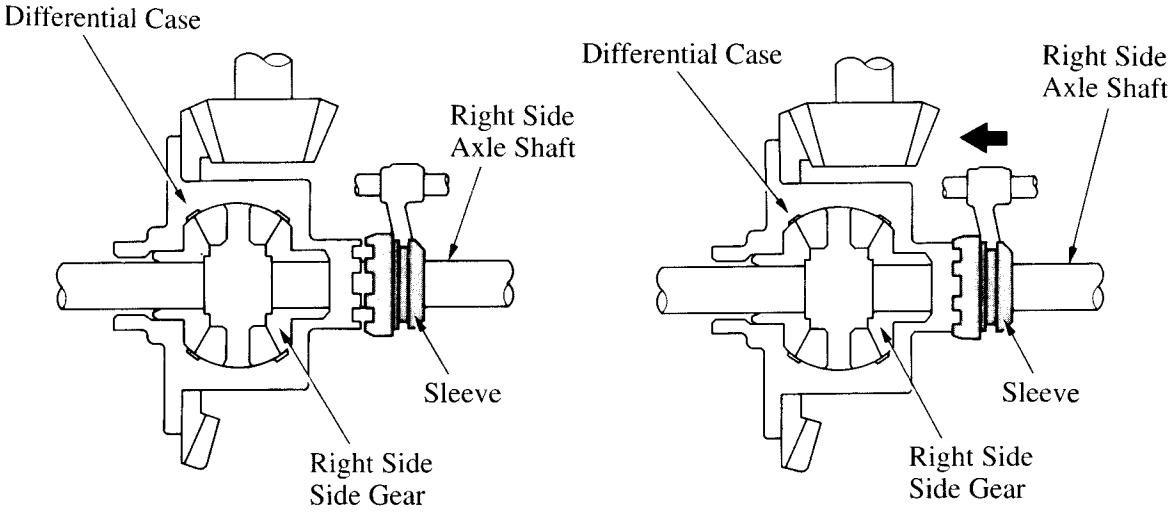

Differential lock not engaged **Differential lock engaged**

■ ELECTRONIC CONTROL SYSTEM

1. General

The sliding of the differential lock sleeve is accomplished by an electric motor, which is controlled by the differential lock ECU in conformity with the signals form the DIFF LOCK switch (on the instrument panel) and from other switches and sensors. This motor is built into the differential lock actuator.

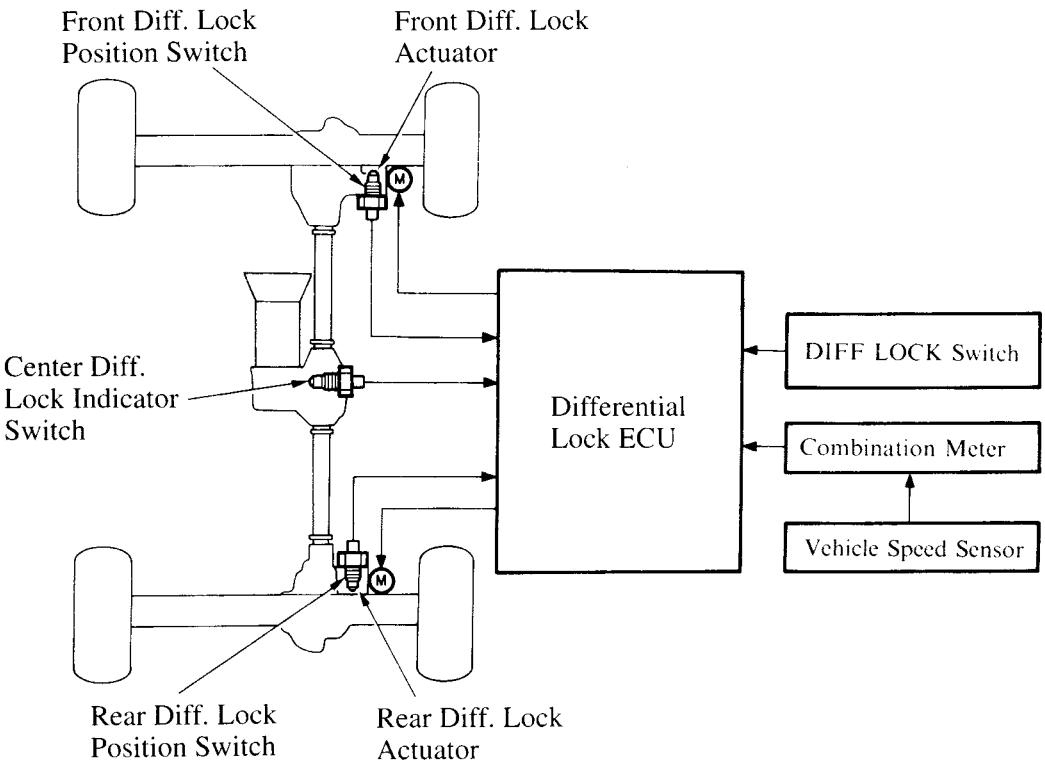

2. Construction

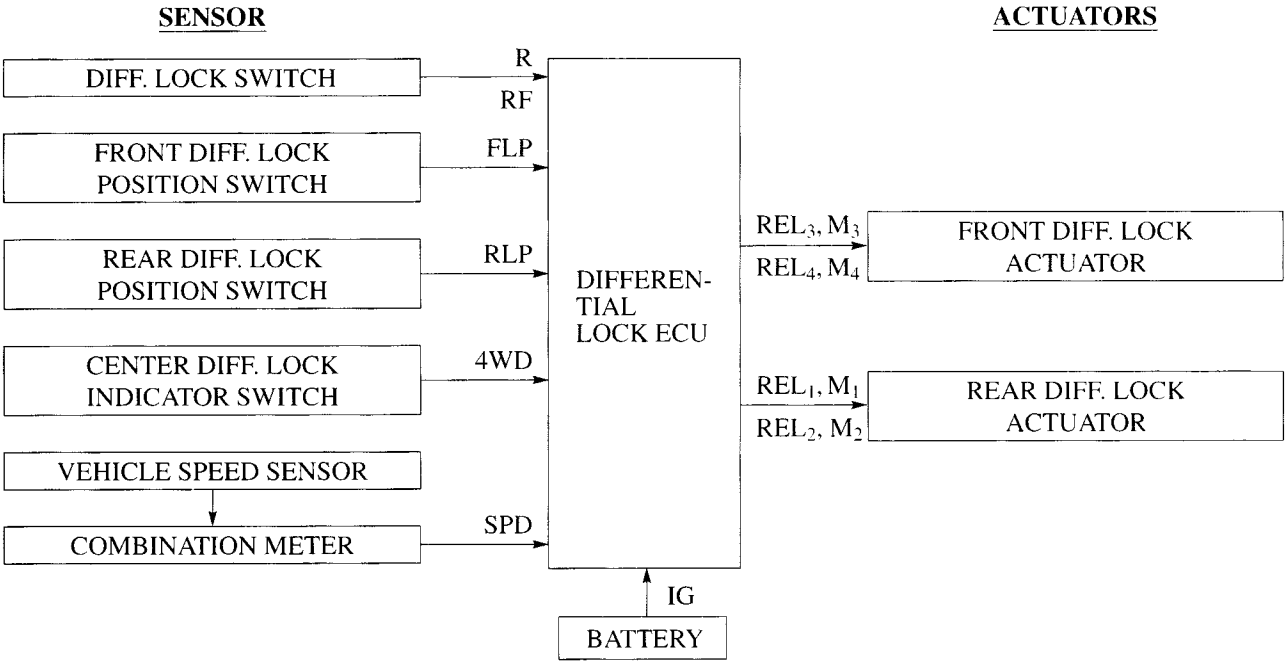

3. Layout of Components

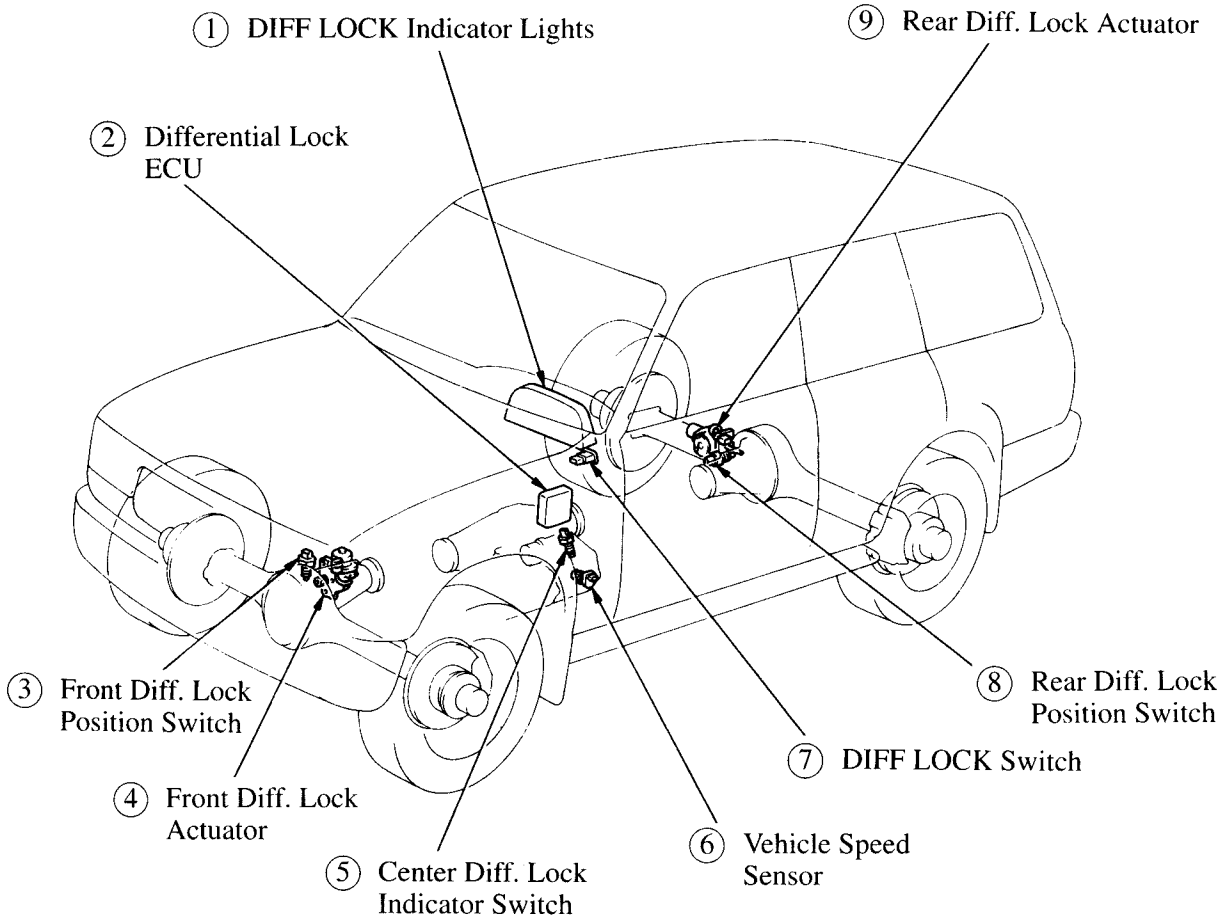

4. Function of Components

No.	Component	Function
1	DIFF LOCK Indicator Lights	Informs the driver what the operating condition of the differential lock system is by the condition of the lights. (off, blinking or on).
2	Differential LOCK ECU	Changes the front and rear differential operation according to the condition of the DIFF LOCK switch and other switches and sensor.
3	Front Diff. Lock Position Switch	Detects front differential operation (lock of free).
4	Front Diff. Lock Actuator	Drives the motor and changes front differential operation in accordance with signals from the diff. lock ECU.
5	Center Diff. Lock Indicator Switch	Detects center differential operation (lock or free).
6	Vehicle Speed Sensor	Detects vehicle speed.
7	DIFF LOCK Switch	Changes the differential operation (lock or free) of the front and rear differential.
8	Rear Diff. Lock Position Switch	Detects rear differential operation (lock or free).
9	Rear Diff. Lock Actuator	Drives the motor and changes rear differential operation in accordance with signals from the diff. lock ECU.

5. Wiring Diagram

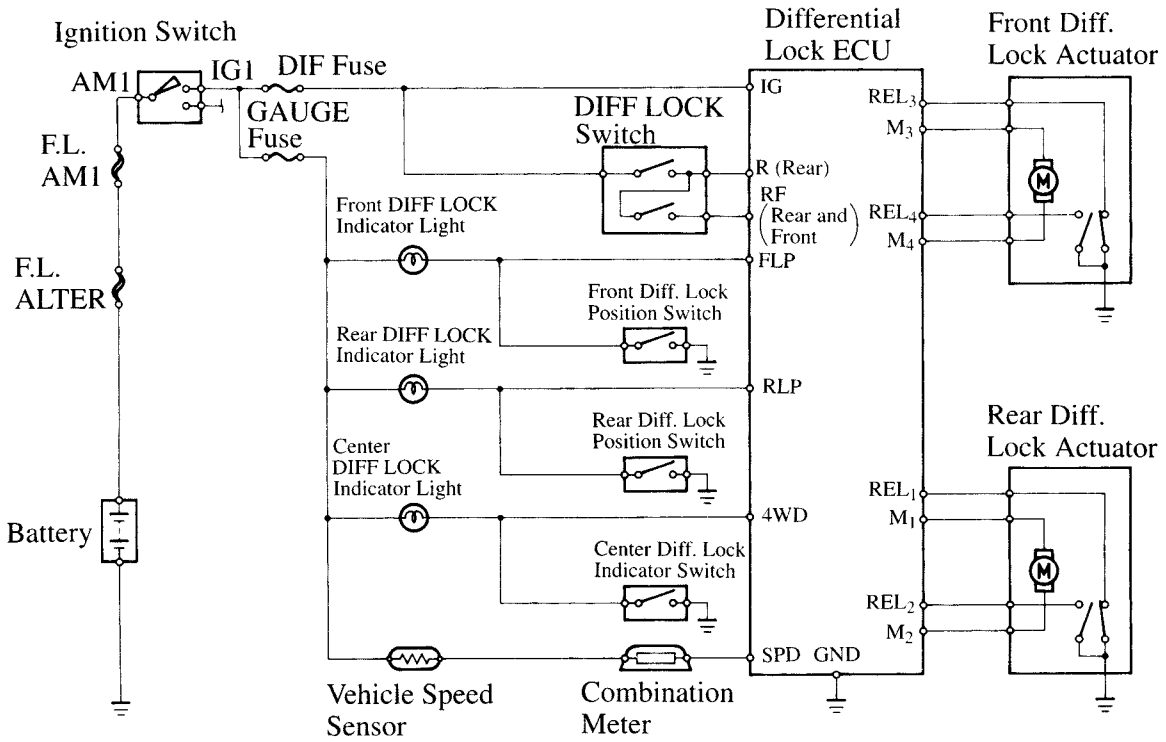

6. Construction and Operation of Components

Differential Lock Actuator

1) Front Differential

The front differential lock actuator is mounted in the front differential carrier.

This actuator consists of gears which convert the rotation of the motor to the sliding motions of the differential lock shift fork, a front differential lock position switch, a limit switch to control the rotation of the motor, and other components.

The motor rotates by signals from the differential lock ECU. This rotation transferred in the order from the drive gear to the driven gear, spiral spring for the shift wait mechanism, final gear and to the differential lock shift fork. Thus the differential lock shift fork slides changing the operation of the front differential between locked and free.

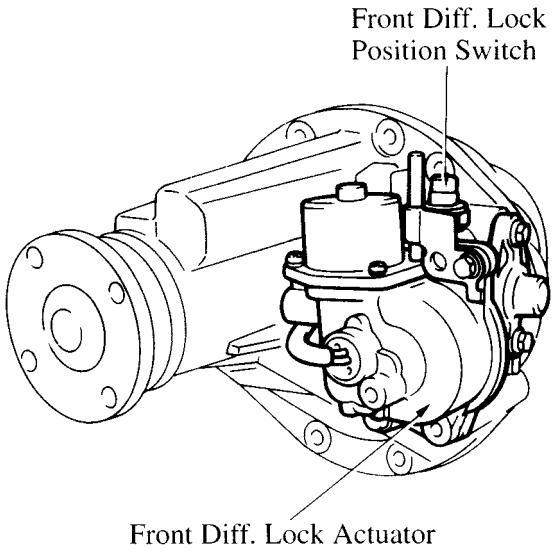

▶ Front Diff. Lock Actuator◀

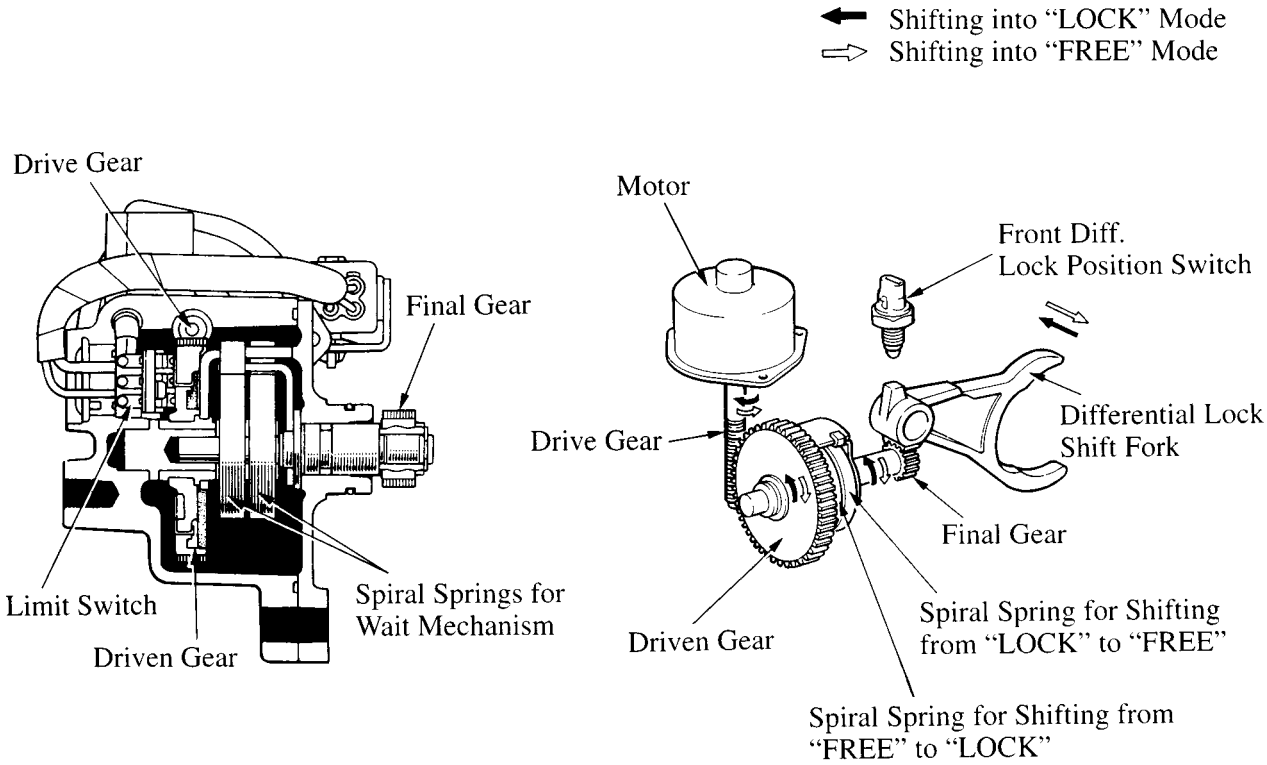

a. Motor Control Limit Switch

This limit switch consists of a contact plate mounted on the side of the driven gear and contact springs mounted in the actuator case.

A notch is provided on the contact plate and the contact plate slides on the contact spring together with the rotation of the driven gear.

In this way the connection state of the contact springs changes, causing the motor to stop always in the optimum position.

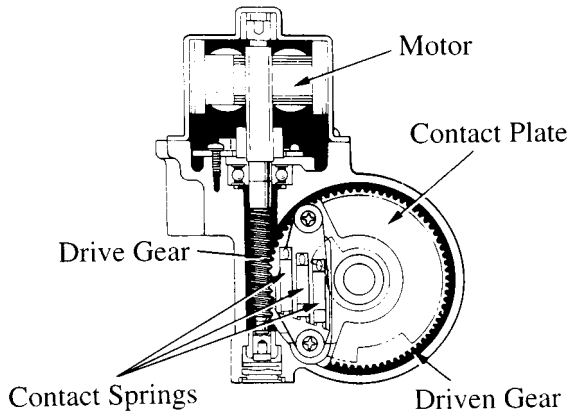

b. Wait Mechanism Spiral Springs

If the operation resistance of the front drive shift fork shaft is large, the motor force is partially stored in the spiral springs. Afterward, when the the operating resistance is reduced, the spring force causes the front drive shift fork shaft to slide. Two spiral springs are included in the wait mechanism, one for shifting from FREE to LOCK and the other for shifting from LOCK to FREE.

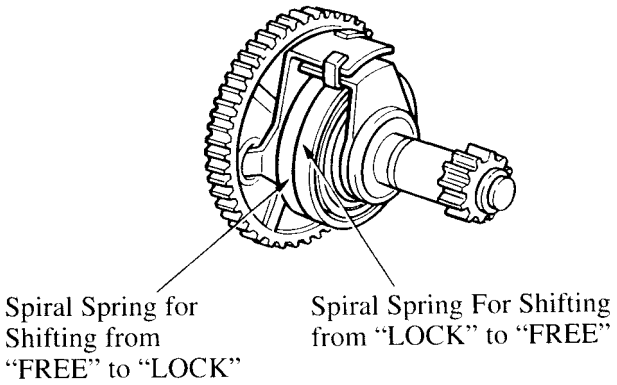

2) Rear Differential

The rear differential lock actuator is mounted in the rear differential carrier.

The basic construction and operation of this actuator are the same as those of the front differential actuator, but in the actuator for the front, sliding of the shift fork is caused directly by the final gear while in the actuator for the rear, it is caused via the shift fork shaft.

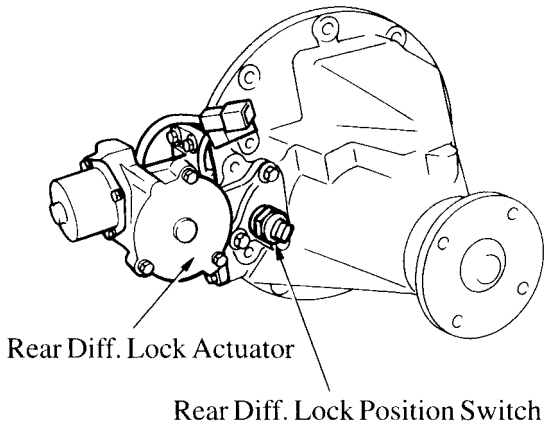

▶ Rear Diff. Lock Actuator ◀

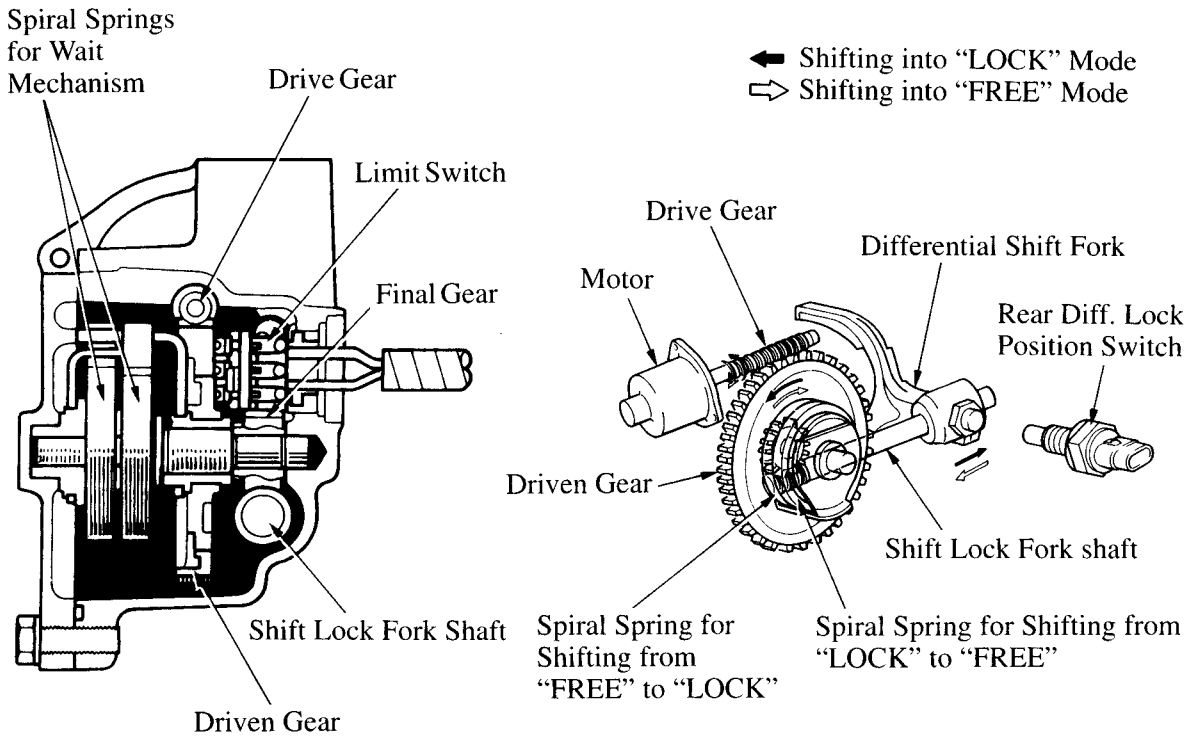

DIFF LOCK Switch

This switch is push & turn type switch located on the instrument panel. When this switch is operated it restricts the operation of the rear differential only or both the front and rear differentials.

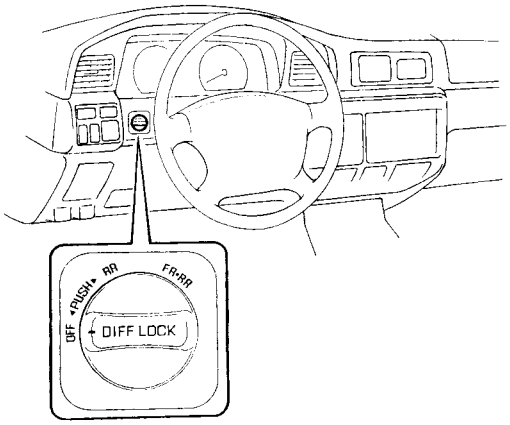

DIFF LOCK Switch

DIFF LOCK Indicator Lights

The DIFF LOCK indicator lights are located on the combination meter with separate indicators provided for the front differential and the rear differential.

These indicator lights inform the driver of the operating condition of the differential lock system by lighting up or blinking.

When the DIFF LOCK switch is operated to change the operating condition of the differential from free (with the indicator lights off) to locked, the indicators immediately start blinking.

When the differential lock is completed, the indicator lights remain on.

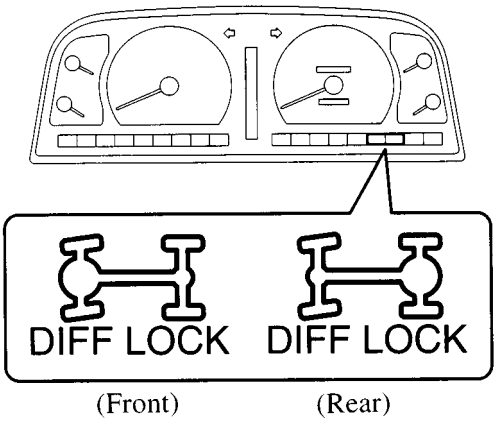

DIFF LOCK Indicator Lights

Differential Lock Position Switch

1) Front Differential

This switch is mounted on the front differential lock actuator. When the differential lock actuator is in the "FREE" mode, the front end of this switch separates from the shift fork. Since the internal contact points are open, the switch is off at this time. When the shift fork is driven by the differential lock actuator and the front differential is shifted into the "LOCK" mode, the shift fork pushes against the front end of the switch closing the contact. This turns the switch on.

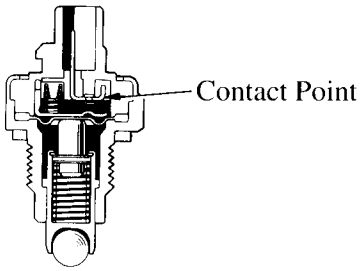

Diff. Lock Position Switch

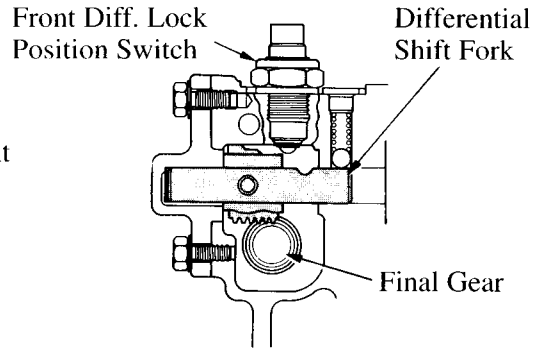

OFF ("FREE" Mode)

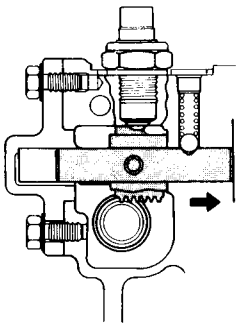

ON ("LOCK" Mode)

2) Rear Differential

The differential lock position switch for the rear differential is mounted on the rear differential lock actuator. The operation of this switch is the same as the front differential lock position switch. This switch goes on or off in accordance with the motions of the shift fork shaft . It goes on when the rear differential is shifted to the "LOCK" mode.

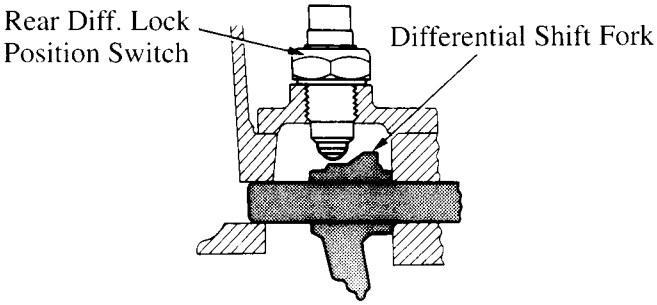

OFF ("FREE" Mode)

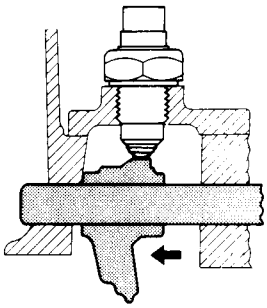

ON ("LOCK" Mode)

7. Differential Lock ECU

The differential lock ECU operates the differential lock actuators and DIFF LOCK indicator lights in accordance with the conditions of the DIFF LOCK switch and other switches. If the vehicle speed goes above 8 km/h (5 mph), the ECU prohibits shifting of the differential lock actuator form the “FREE” mode to the “LOCK” mode.

The operation of the ECU is as follows:

Shifting from “FREE” mode to “LOCK” mode

When all the following conditions are satisfied, the ECU drives the differential lock actuator motor and restricts operation of the differential:

- The DIFF LOCK switch is in the “RR” or “FR·RR” position.
- The center differential lock indicator switch is on. (Transfer shift lever “L” range)
- The vehicle speed is 8 km/h (5 mph) of lower.

When the DIFF LOCK switch is turned to the “RR” position, only the rear differential is shifted to the “LOCK” mode. When the DIFF LOCK switch is turned to the “FR·RR” position, both the front and rear differentials are shifted to the “LOCK” mode.

Shifting form “LOCK” mode to “FREE” mode

When one of the following conditions is satisfied, the ECU drives the differential lock actuator motor and releases the restriction on operation of the differential.

- The DIFF LOCK switch is turned to the “OFF” position.
- The DIFF LOCK switch is turned form the “FR·RR” position to the “RR” position.
- The center differential lock indicator switch is turned off. (Transfer shift lever “H” range)

Control of the DIFF LOCK Indicator Lights

The ECU turns off, blinks or turns on the DIFF LOCK indicator lights in accordance with the conditions of the DIFF LOCK switch and differential lock position switch as shown in the following table.

Indicator Light		DIFF LOCK Switch	Diff Lock Position Switch		Differential Conditions
			Front	Rear	
Front Diff.	OFF	“OFF” or “RR” Position	OFF	—	Shifted into “FREE” mode
	BLINKS*	“FR·RR” Position	OFF	—	During shifting into “LOCK” mode
	ON	“FR·RR” Position	ON	—	Shifted into “LOCK” mode
Rear Diff.	OFF	“0FF” Position	—	OFF	Shifted into “FREE” mode
	BLINKS*	“RR” or “FR·RR” Position	—	OFF	During shifting into “LOCK” mode
	ON	“RR” or “FR·RR” Position	—	ON	Shifted into “LOCK” mode

* When the ECU prohibits shifting into “LOCK” mode because the vehicle speed is above 8km/h (5 mph). DIFF LOCK indicator light(s) will blink.

AXLES

■ FRONT AXLE

- A full–floating type axle is used for the front axle.
- The center of the axle housing has adopted a square cross section to realize excellent rigidity.

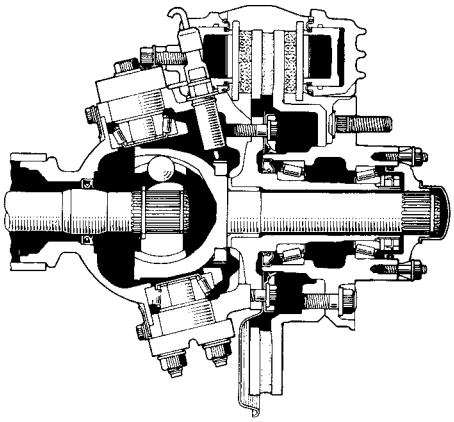

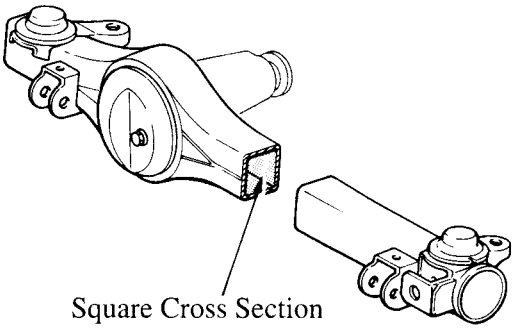

■ REAR AXLE

- Similar to the front axle, the full–floating type axle has also been adopted for the rear axle.
- The axle housing is provided with reinforcements to realize excellent rigidity.

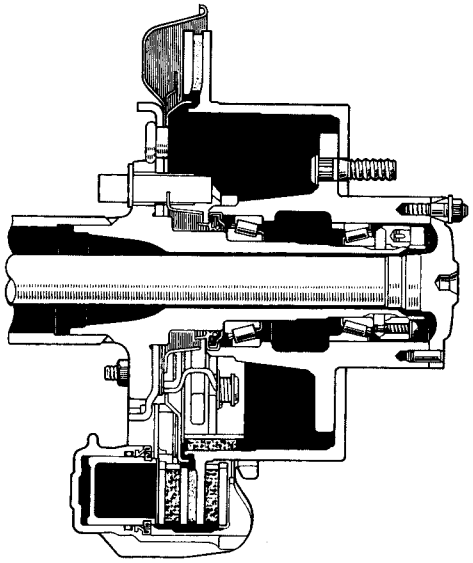

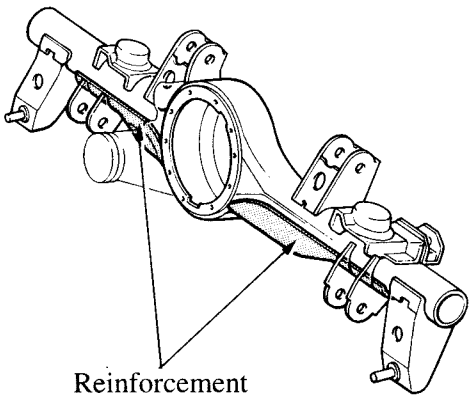

BRAKES

■ DESCRIPTION

Large size ventilated disc type brakes are used for the front and rear wheel brakes.

The ABS (Anti–Lock Brake System) is also standard equipment in the LX450.

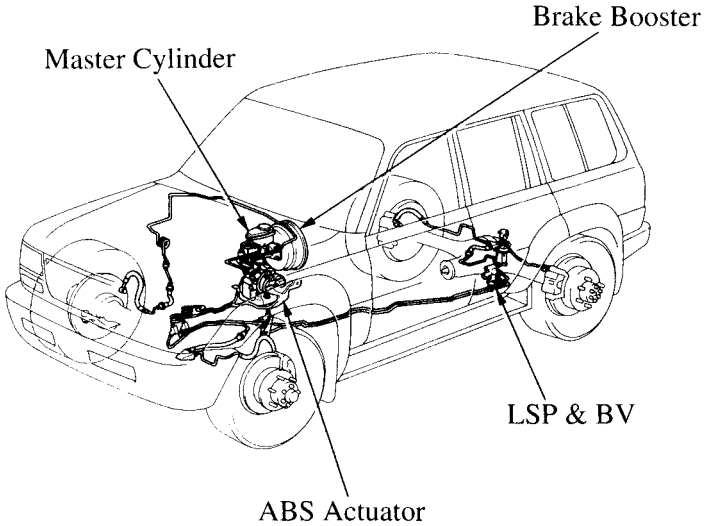

▶ Specifications ◀

Model / Item		LX450
Master Cylinder	Type	Tandem
	Diameter mm (in.)	25.4 (1.00)
Brake Booster	Type	Tandem
	Size in.	8” + 9”
Front Brake	Type	Ventilated Disc
	Pad Area cm^2 ($in.^2$)	50 (7.75) x 4
	Wheel Cylinder Dia. mm (in.)	45.4 + 45.4 (1.79 + 1.79) x 4
	Rotor Size (D x T)*1 mm (in.)	311.4 x 32 (12.26 x 1.26)
Rear Brake	Type	Ventilated Disc
	Pad Area cm^2 ($in.^2$)	37 (5.74) x 4
	Wheel Cylinder Dia. mm (in.)	48.1 (1.89)
	Rotor Size (D x T)*1 mm (in.)	335.0 x 18 (13.19 x 0.71)
Brake Control Valve	Type	LSP & BV
	Deflection Point of Hydraulic Pressure*2 kPa (kgf/cm^2, psi)	3432 (35, 498)
	Pressure Reduction Gradient	0.25
Parking Brake	Type	Drum
	Size mm (in.)	230 (9.06)
	Lever Type	Center Lever
ABS (Anti–Lock Brake System)		STD

*1: D: Outer diameter, T: Thickness, *2:Unloaded condition

■ MASTER CYLINDER

- LX 450 use a portless piston in front side (rear circuit) and a conventional piston in the rear side (front circuit).
- The master cylinder is made aluminum alloy to reduce weight.

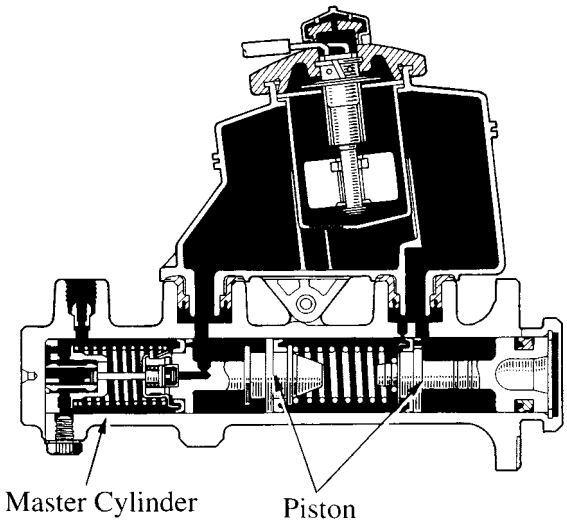

■ FRONT BRAKE

The front brakes use discs with Y–shaped fin configuration providing excellent cooling performance.

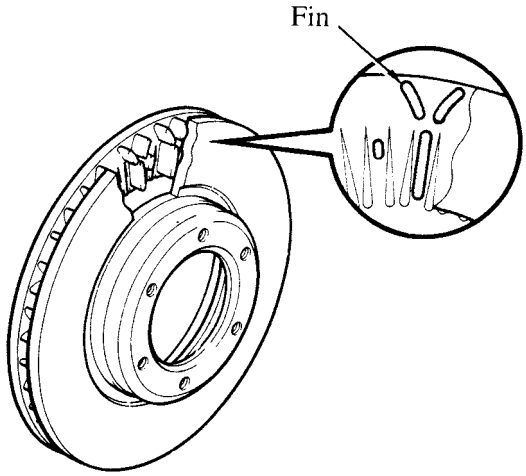

■ REAR BRAKE

- Similar to the front brakes, the rear brakes also use discs with Y–shaped fin configuration.
- The rear brakes use the drum–in–disc type brake with a built–in drum type parking brake. The parking brakes are the duo–servo type.

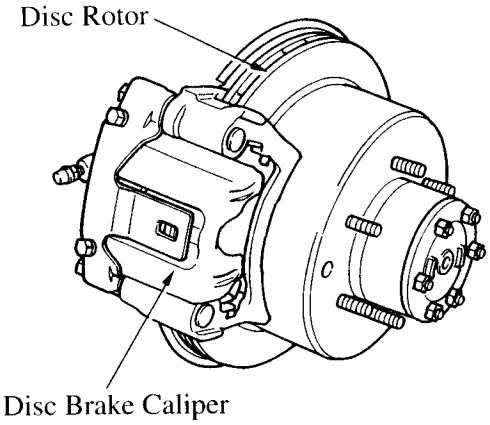

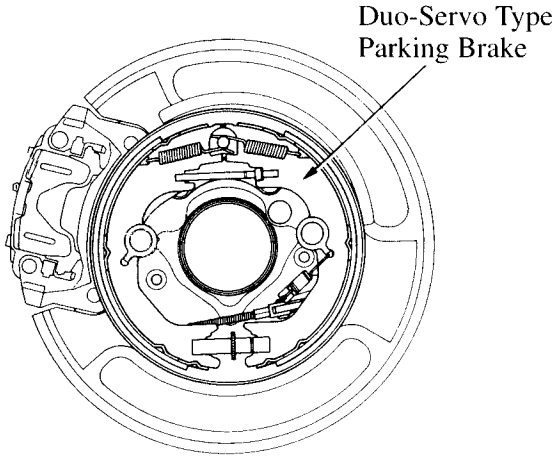

■ ABS (Anti–Lock Brake System)

1. General

The ABS controls the brake fluid pressure applied to the wheel cylinders. This prevents the wheels from locking up during a panic stop. Basic construction and operation are the same as the ’90 LS400; however, on the LX 450, the ABS will not engage when the center differential is made to lock with the transfer in “L”.

2. Layout of Components

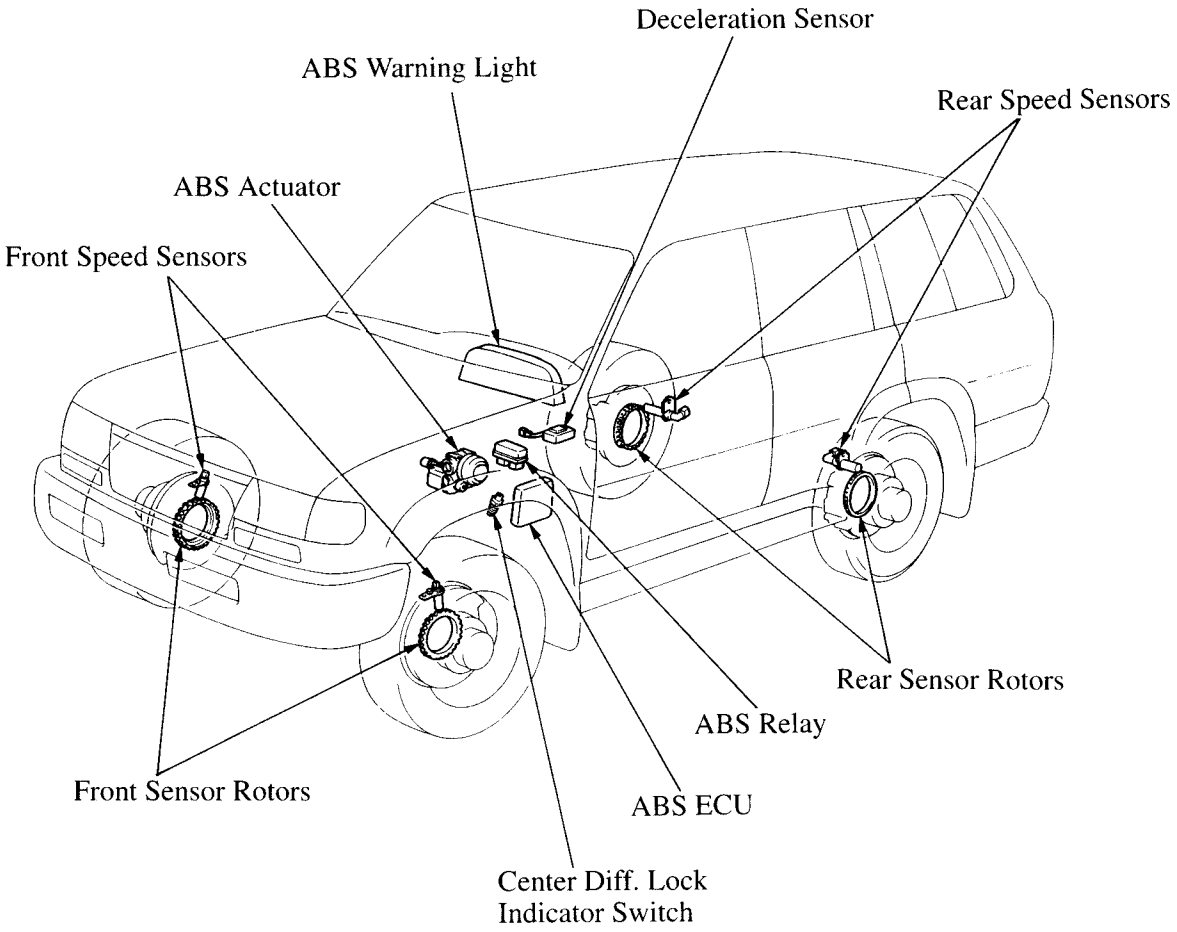

3. Wiring Diagram

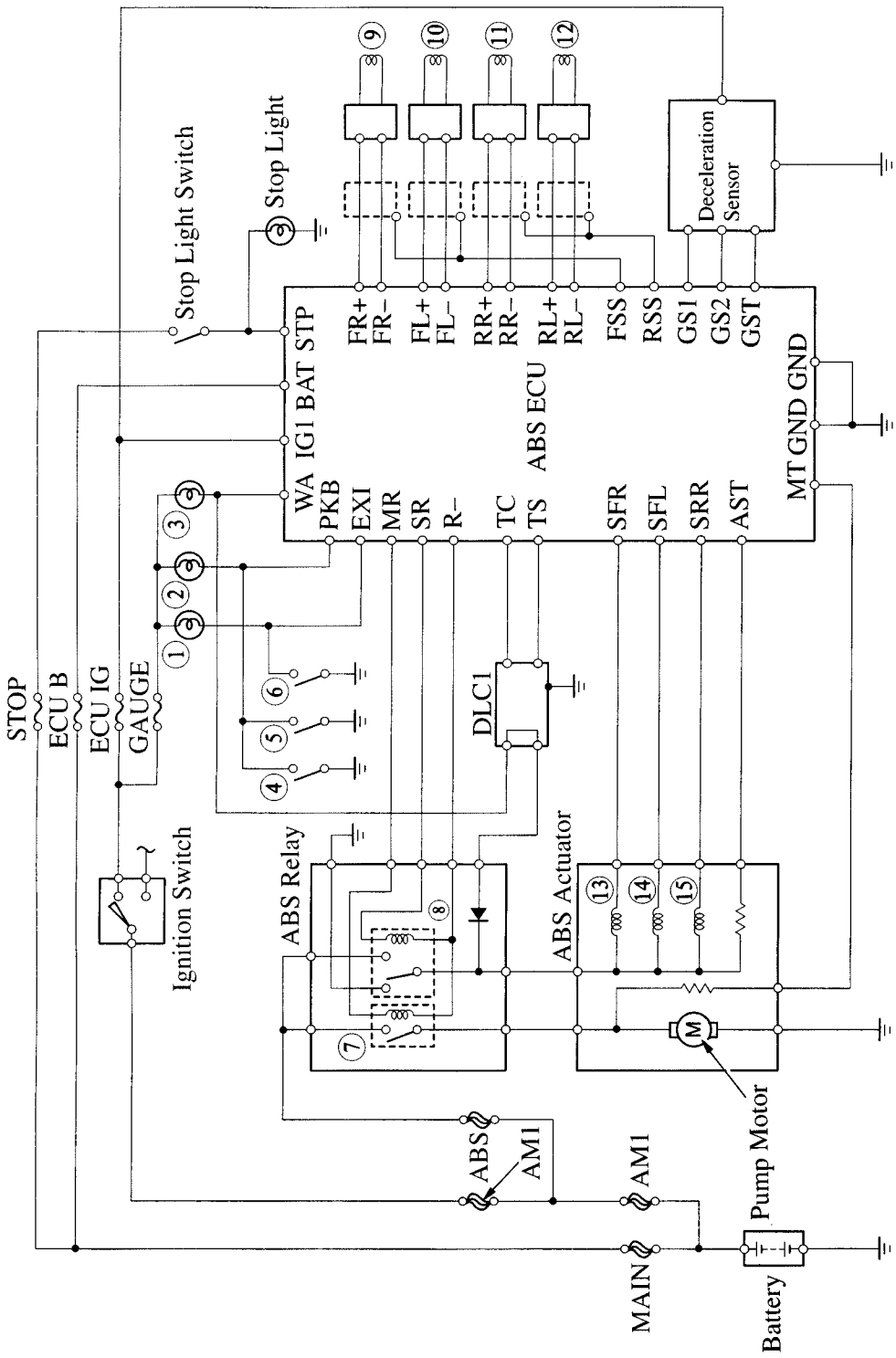

① Center DIFF. LOCK Indicator Light
② Brake Indicator Light
③ ABS Warning Light
④ Parking Brake Switch
⑤ Brake Fluid Level Warning Switch
⑥ Center Diff. Lock Position Switch
⑦ Pump Motor Relay
⑧ Solenoid Relay
⑨ Front Right Speed Sensor
⑩ Front Left Speed Sensor
⑪ Rear Right Speed Sensor
⑫ Rear Left Speed Sensor
⑬ Front Right Solenoid Valve
⑭ Front Left Solenoid Valve
⑮ Rear Solenoid Valve

4. Hydraulic Circuit

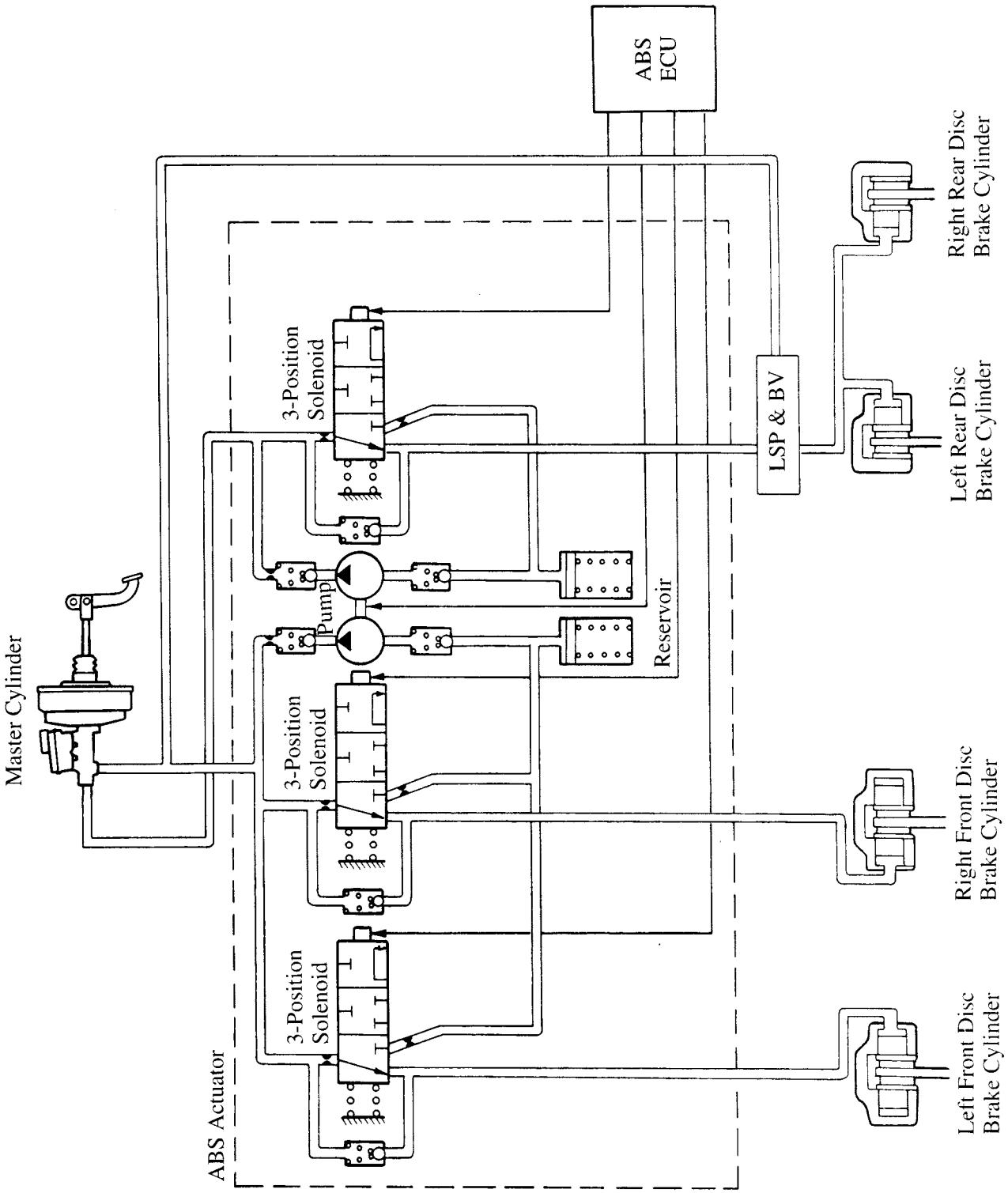

5. Construction and Operation of Components

Front and Rear Speed Sensors

The front speed sensors are fitted to the steering knuckle, and the rear speed sensors are fitted to rear axle end. Front sensor rotors are fitted to the wheel side of the drive shaft, and rear sensor rotors are fitted to the rear axle hub.

▶ Front Speed Sensor ◀

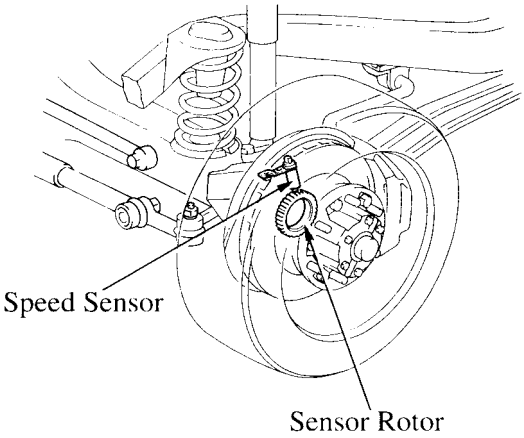

▶ Rear Speed Sensor ◀

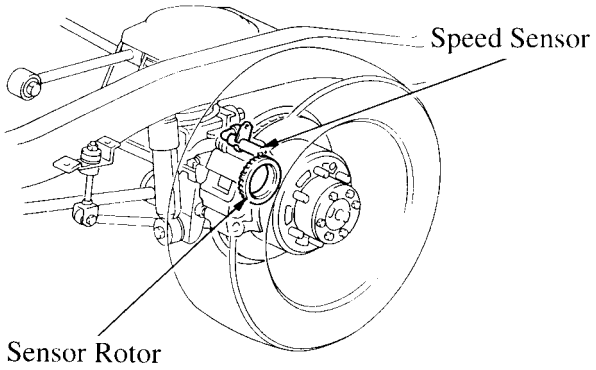

Deceleration Sensor

Consisting of two pairs of LEDs (Light Emitting Diodes) and photo transistors, a slit plate, and a signal conversion circuit, the deceleration sensor is mounted above the floor tunnel, inside the console.

When the vehicle decelerates, the slit plate rotates in proportion to the deceleration rate. Then, the photo transistors turn ON and OFF, depending on whether the light from the LEDs to the photo transistors in interrupted or not. Using two pairs of LEDs and photo transistors, the extent of deceleration is detected through the combination of the ON and OFF signals output by each photo transistor.

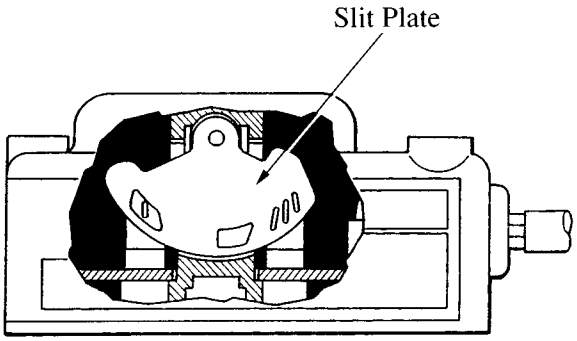

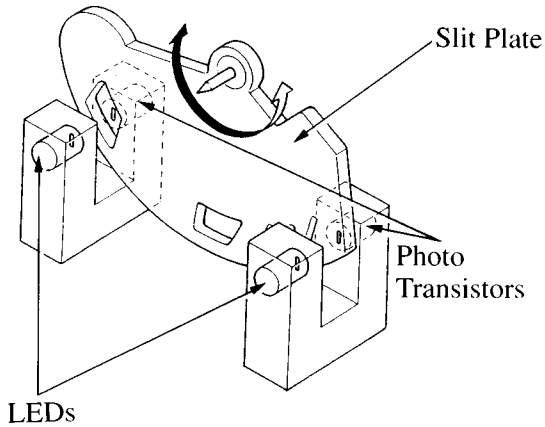

ABS Actuator

The ABS actuator consists of 3–position solenoid valves, a reservoir, and a pump. It regulates the braking hydraulic pressure applied to each wheel cylinder according to the signals received from the ABS ECU, thus controlling the rotation of the wheels.

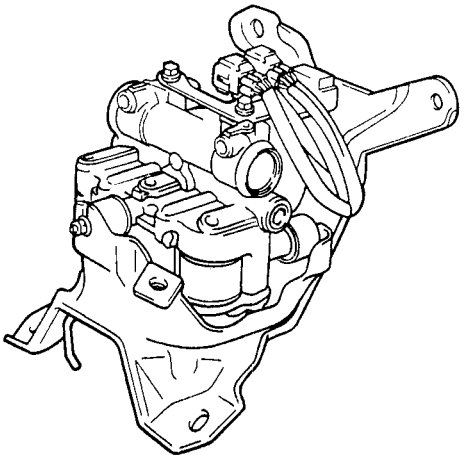

ABS ECU

The basic function of the ABS ECU is the same as the LS 400. However, on the LX450, when the transfer shift lever is placed in the “L” position (the center differential is thus locked), the ECU stops the operation of the ABS.

1) ABS Warning Light

In case of a system malfunction, or when the transfer shift lever is placed in the “L” position (the center differential is thus locked), the ABS warning light turns on to alert the driver of this fact. When the ignition switch is first turned on, the ABS warning light turns on for 3 seconds, allowing the driver to check that the light bulb is not blown.

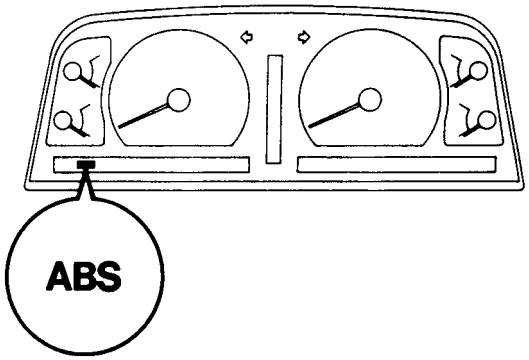

ABS Warning Light

2) Initial Check

An initial check is carried out once each time after the engine has started and initial vehicle speed exceeds 4 mph (6 km/h). The functions of the 3–position solenoid valve and pump motor in the actuator are checked in order.

This initial check is performed even when the transfer shift is placed in the “L” position (the center differential is thus locked) and the ABS is not active.

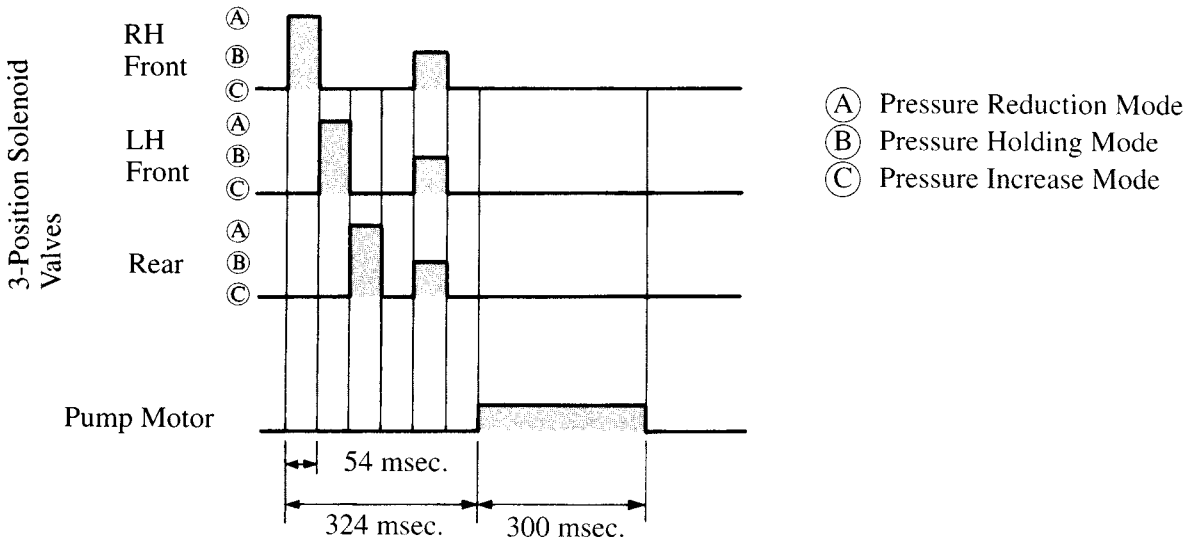

3) Self–Diagnosis

If malfunction occurs in any sensor or actuator, the ABS warning light in the combination meter will light up and alert the driver that a malfunction has occurred. The ECU will also store the codes of the malfunctions. For the diagnostic code check method, diagnostic code and diagnostic code clearance, see the the ’96 Lexus LX 450 Repair Manual (Pub. No. RM482U).

4) Fail–Safe

In the event of a malfunction in an input signal to the ECU, the ECU cuts off its current to the actuator. As a result, the brake system operates in the same way as in a vehicle without ABS, and normal braking function is assured.

SUSPENSION

■ DESCRIPTION

A leading arm coil spring with lateral rod is used in the front suspension. A 4–link coil spring with lateral rod is used in the rear suspension. This suspension system provides good controllability and riding comfort and provides dependable operation on rough roads.

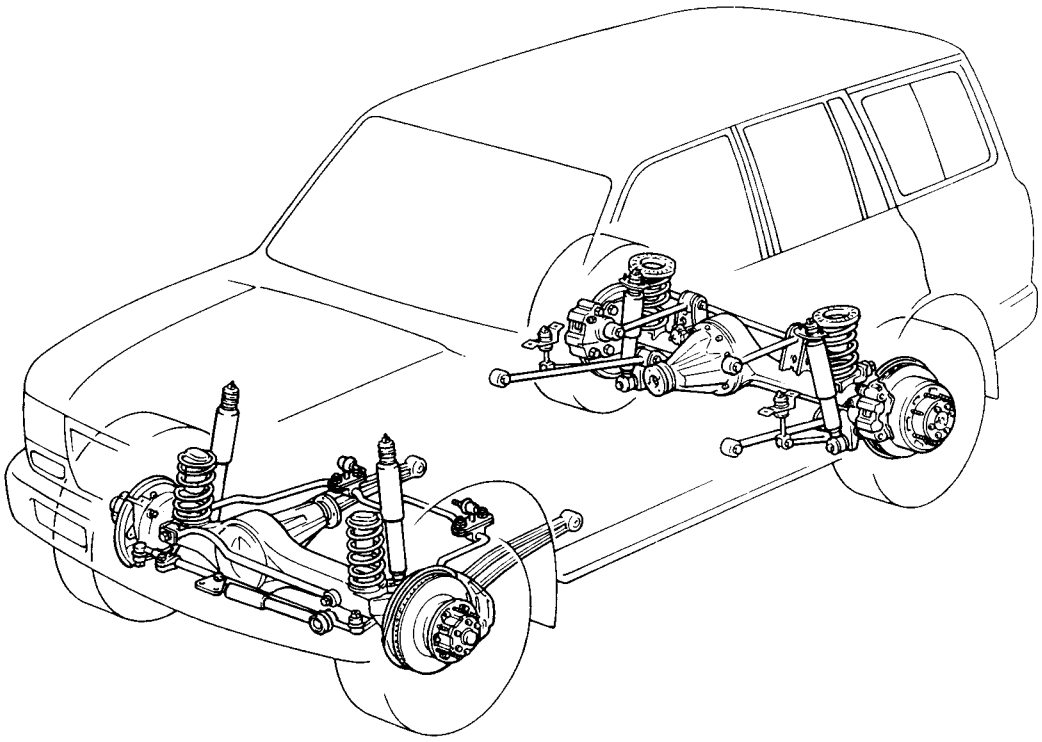

▶ Suspension Specifications ◀

Suspension / Item		Front	Rear
Tread	mm (in)	1595 (62.8)	1600 (63.0)
Caster*1	degrees	3°00′	—
Camber*1	degrees	1°00′	—
Toe–In*1	mm (in)	2 (0.08)	—
Kingpin Inclination	degrees	13°00′	—

*1: Unloaded Vehicle Condition

■ FRONT SUSPENSION

1. General

The front suspension is a leading arm coil spring with lateral rod type suspension which consists of 2 leading arms, a lateral rod, coil springs and hollow springs. The layout of each of the components and turning of the suspension have also been optimized to reduce suspension friction and improve rigidity, thus attaining good controllability and riding comfort.

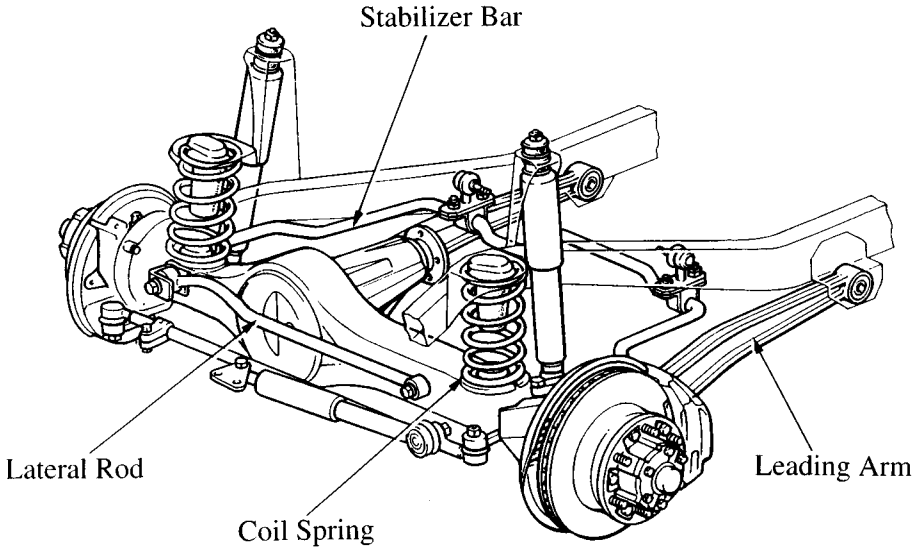

2. Shock Absorber

- Twin–tube type shock absorbers with rebound spring are used on LX450. This shock absorber contains a low–pressure nitrogen gas with good dampening characteristics.

- The piston valve is provided with both the elongation and contraction valves. Also, this shock absorber optimizes the oil path for efficient oil flow. These characteristics provide the excellent shock absorber's control and stability.

- A rebound spring is enclosed in the shock absorber to realize excellent stability, controllability, and riding comfort. The basic operation is the same as that in the '96 LS400. For details, see '95 LS400 New Car Features (Pub. No. NCF114U) on page 77.

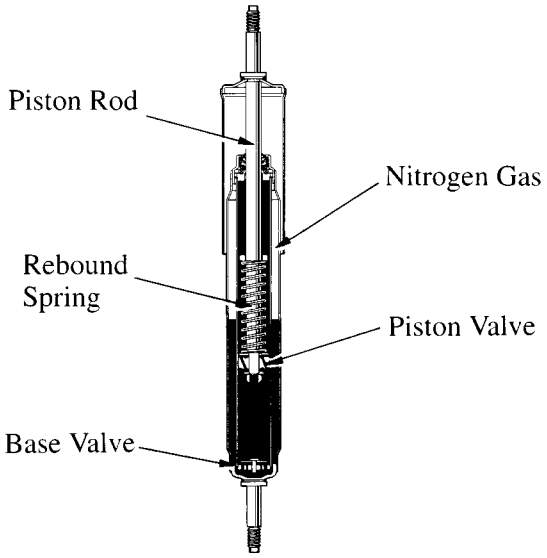

3. Suspension Spring

A hollow spring made of rubber is installed coaxially with the coil spring, thus providing non–linear spring characteristics during bounds.

The spring rate of the hollow spring is set low at the start of deformation. The spring rate increases rapidly as the rubber material becomes compressed midway through the stroke. As a result, the shock felt during bottoming is reduced.

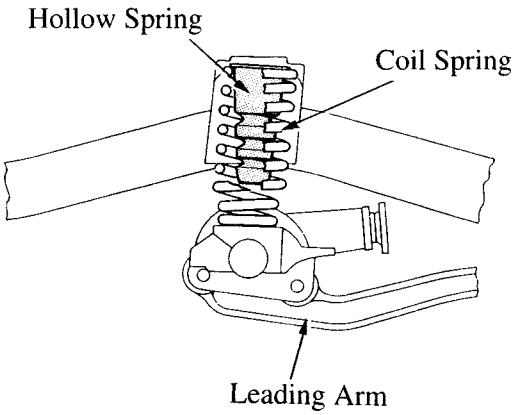

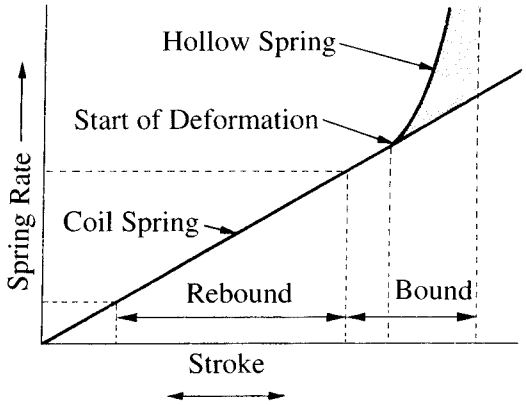

4. Leading Arm

- The leading arm is made of cast iron with a highly rigid I–cross section.
- The leading arm is mounted to the frame via cylindrical bushings. These bushing having internal openings. These openings produce soft suspension characteristics lengthwise and hard characteristics vertically. This design provides both good riding comfort and driving stability at the same time.

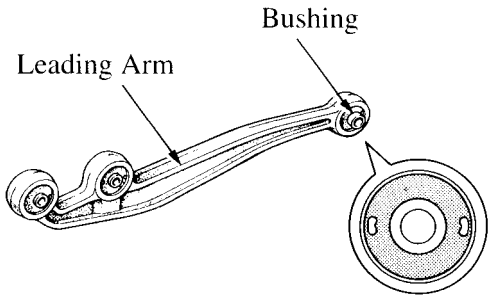

5. Lateral Rod

- A solid bar is used for the lateral rod.
- Through optimum tuning of the bushings, the lateral rigidity of the suspension is improved and good controllability is maintained.

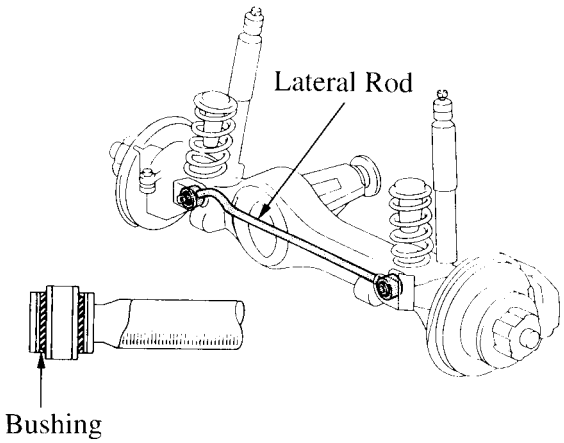

■ REAR SUSPENSION

1. General

- The rear suspension is a 4–link coil spring with lateral rod type suspension which consists of 2 lower, 2 upper control arms and a lateral rod. As with the front suspension, coil springs and hollow springs are used together for the rear susupension springs. The layout of each of the components and turning have also been optimized to reduce suspension friction and improve rigidity in order to obtain good controllability and riding comfort. The basic construction and operation of the shock absorbers and suspension springs are the same as in the front suspension.

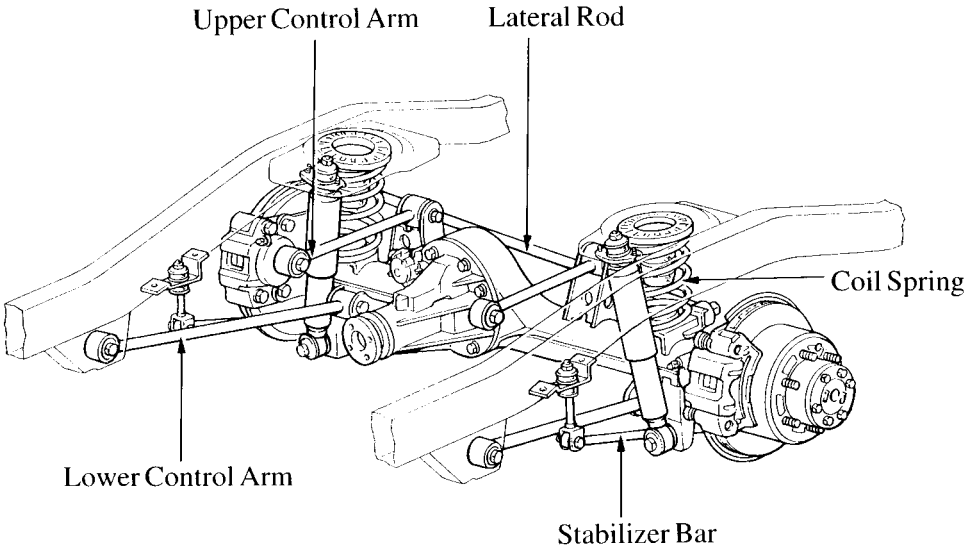

2. Lower Control Arm

- The lower control arm is a larger diameter hollow bar to assure rigidity while reducing weight.
- The strength of the bushing mounts has been increased by the use of forged parts.
- Cylindrical bushings are used. The bushing on the frame side has internal openings in the vehicle's longitudinal direction. The bushing on the axle side has internal openings in the vertical direction. As a result, excellent controllability and riding comfort are realized.

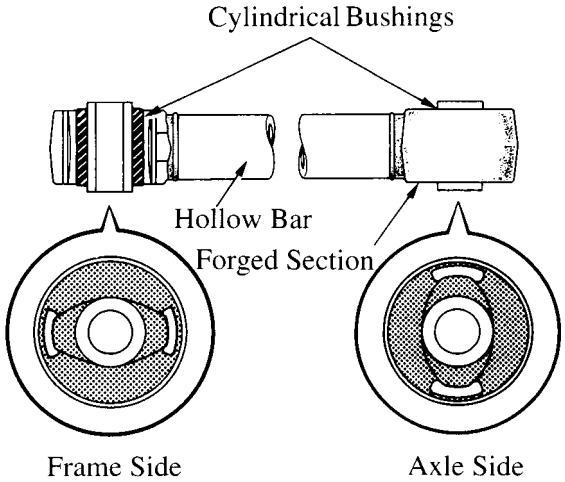

3. Upper Control Arm

- As with the lower control arm, a hollow bar is used for the upper control arm to reduce weight.
- Cylindrical bushings like those used with the lower control arm are used to reduce suspension friction.

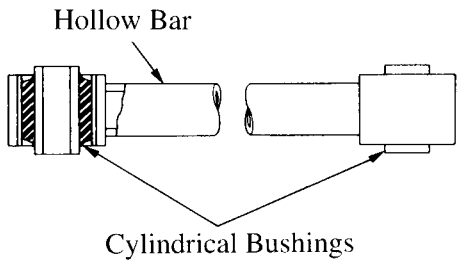

STEERING

■ DESCRIPTION

- The recirculating ball type steering gear gives good steering feeling. The engine revolution sensing type power steering system is used.
- A mechanical type tilt steering system is used.
- An energy–absorbing mechanism has been incorporated in the steering column.

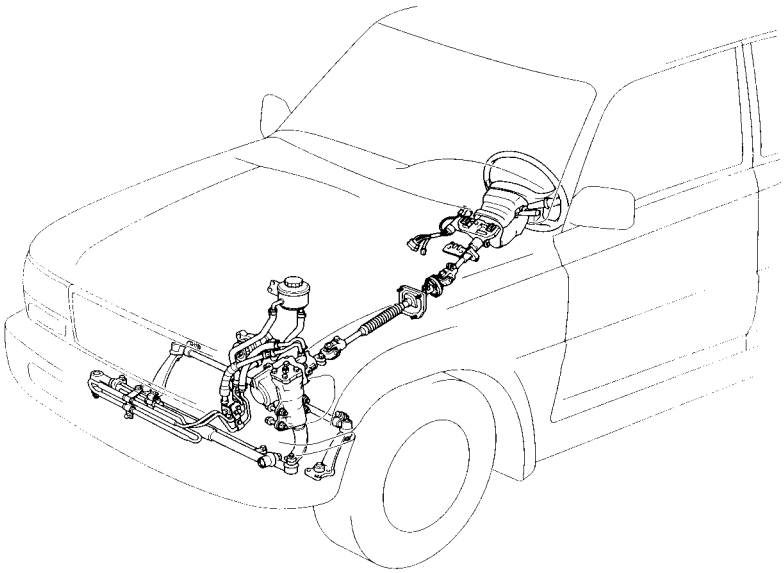

▶ Specifications ◀

Steering Gear Type	Recirculating Ball Type
Gear Ratio (Overall)	18.59 : 1
No. of Turns Lock to Lock	3.4
Fluid Type	ATF Type DEXRON®II or III

■ POWER STEERING

1. General

The power assist control valve is the rotary type in order to lighten the steering effort in the vane pump's low speed range and improve the feeling of response in the high speed range. A preload assist mechanism has been installed in the steering gear box to improve the response feeling when the steering wheel is near the straight line position.

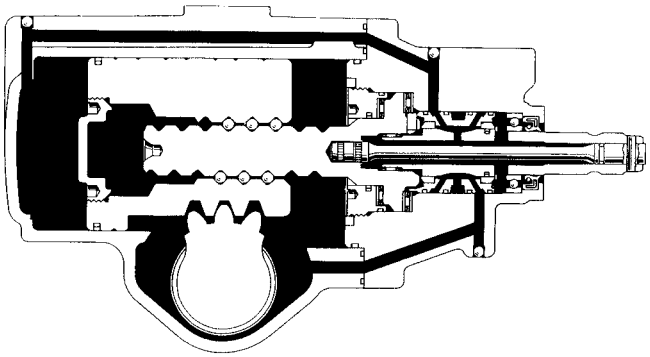

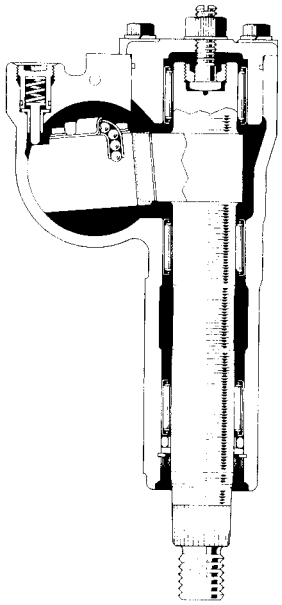

2. Preload Assist Mechanism

When the steering is in the straight line position, the power piston is pushed in the direction of the arrow in the figure below by spring force. This causes the power piston gear to push against the sector shaft gear.

As a result, while the steering wheel is in the straight line position, steering gear preload and steering free play are maintained at appropriate levels for a longer period of time. Also, excellent steering feeling is realized during high–speed driving.

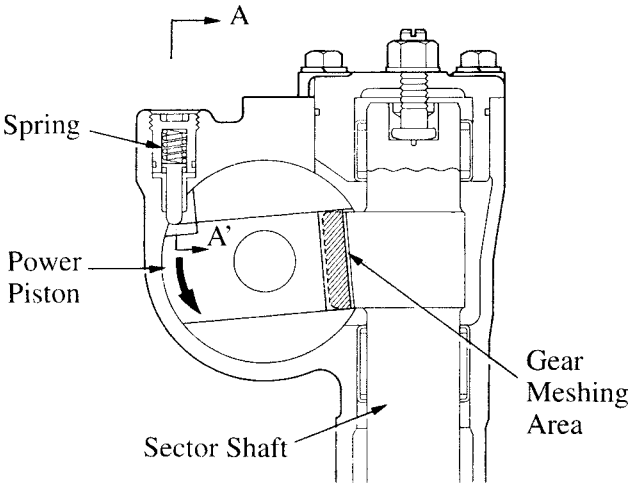

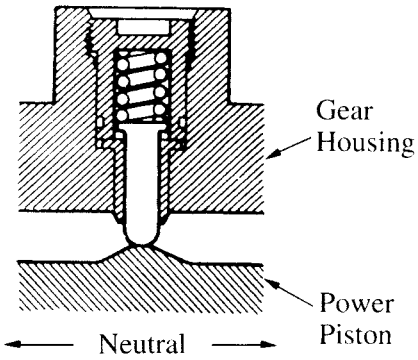

A – A' Cross Section

3. Vane Pump

The vane pump for the power steering system is driven by a gear that is attached to the engine.

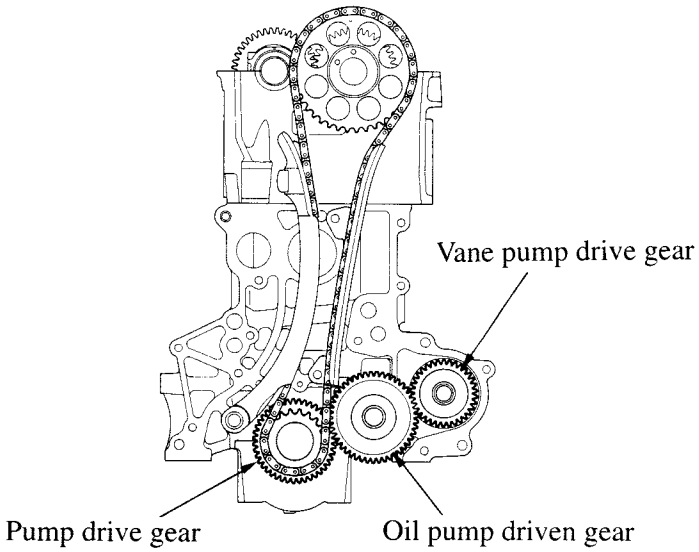

Vane pump gear drive

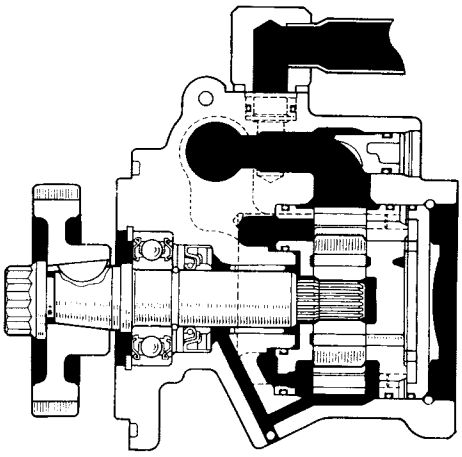

Vane pump cross section

■ TILT MECHANISM

1. General

With tilt steering, the steering column can be adjusted up and down 8 steps. The tilt steering also has an upper lock mechanism that locks the steering column in the top position when the steering column is tilted up.

The steering wheel cannot be pulled down unless the the tilt lever is raised.

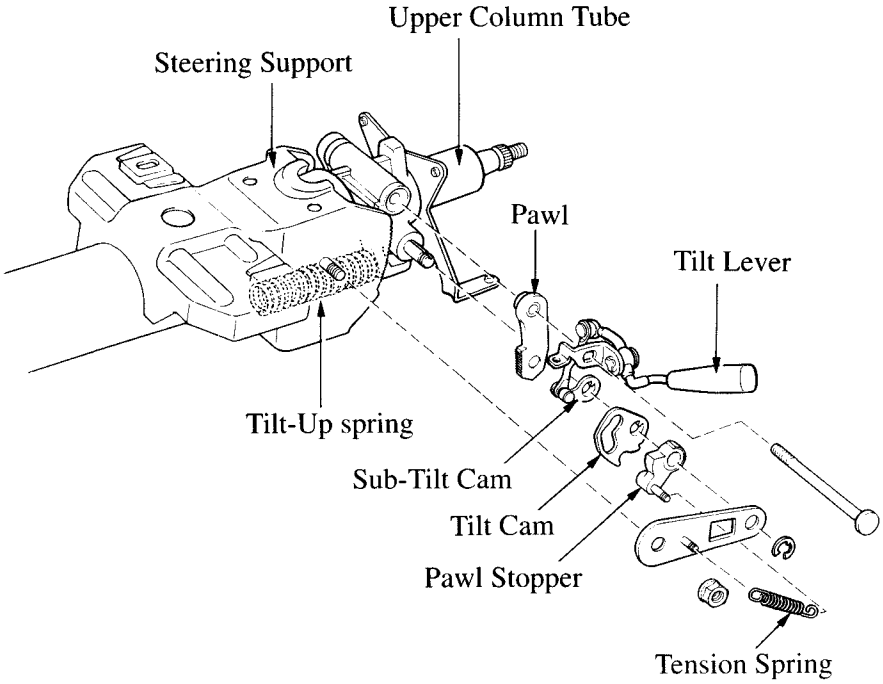

2. Construction and Operation

The tilt lever is connected to the sub–tilt cam by linkage. The sub–tilt cam and tilt cam are connected to the lever lock shaft and turn together with the lever lock bolt. When the tilt lever is raised, the link is pushed down round the fulcrum and rotates the sub–tilt cam, lever lock shaft and tilt cam.

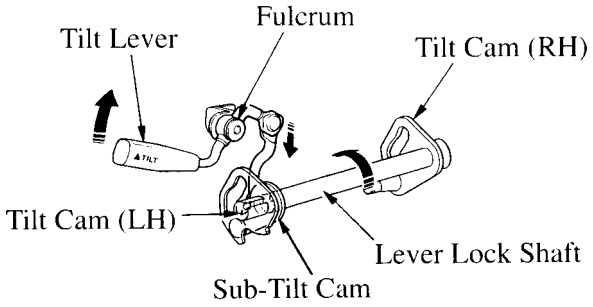

Lock Condition

The pawl is pushed against the steering support by the pawl stopper and tension spring. The pawl is also connected to the tilt cam by a pin provided on the pawl.

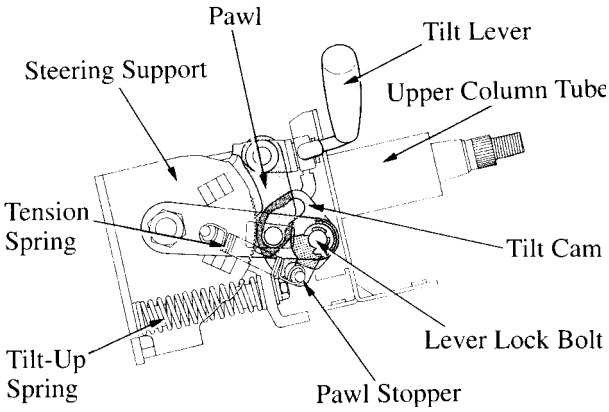

Unlock Condition

When the tilt lever is raised, the tilt cam rotates and the pawl is pulled away from the steering support by the cam hole in the tilt cam.

When this happens, the upper column tube is tilted up to the top position by the tilt–up spring.

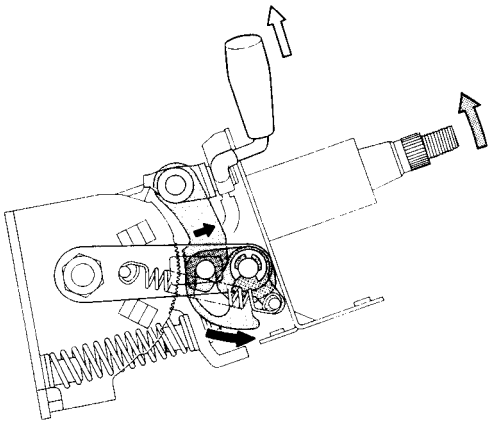

Setting to Desired Position

When the driver unlocks the tilt lock, places the steering wheel to a desired position, and releases the tilt lever, the pawl stopper rotates by tension spring force, causing the pawl to press against the steering support. The upper column tube is thus locked in place.

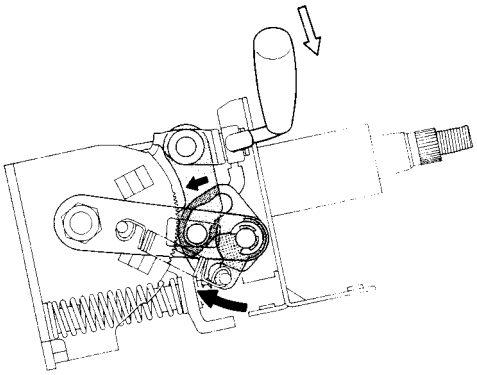

■ ENERGY ABSORGING MECHANISM

1. Construction

The energy absorbing mechanism of the steering column consists of an intermediate shaft made of corrugated tube, bending bracket, breakaway bracket, and a collapsible main shaft.

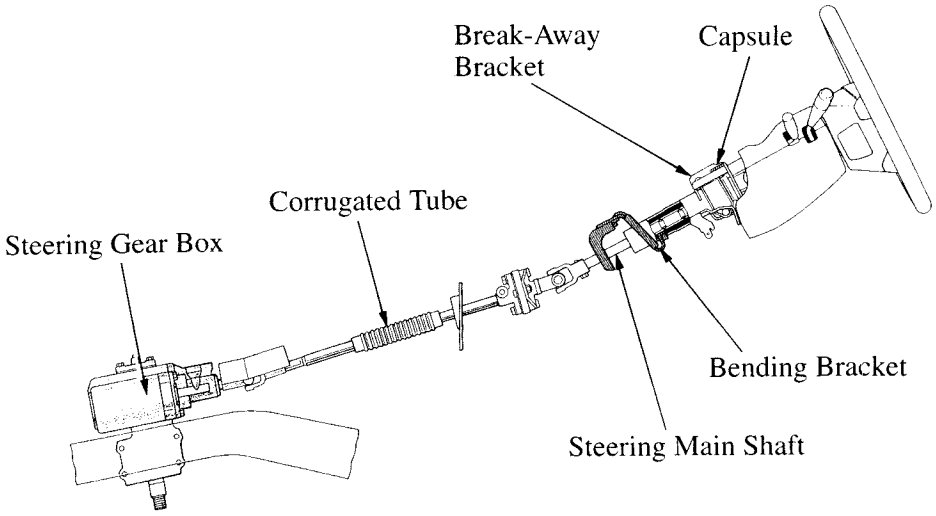

2. Operation

When the steering gear box moves during a collision (primary collision), the corrugated tube of intermediate shaft bends to absorb the impact energy of the primary collision. When a shock is transmitted to the steering wheel in a collision (secondary collision), the bending bracket collapses, and the main shaft contracts to absorb the impact energy. Simultaneously, the breakaway bracket is separated from the capsule. In this manner, the entire steering column moves forward and the impact energy of the primary and secondary collisions can be absorbed.

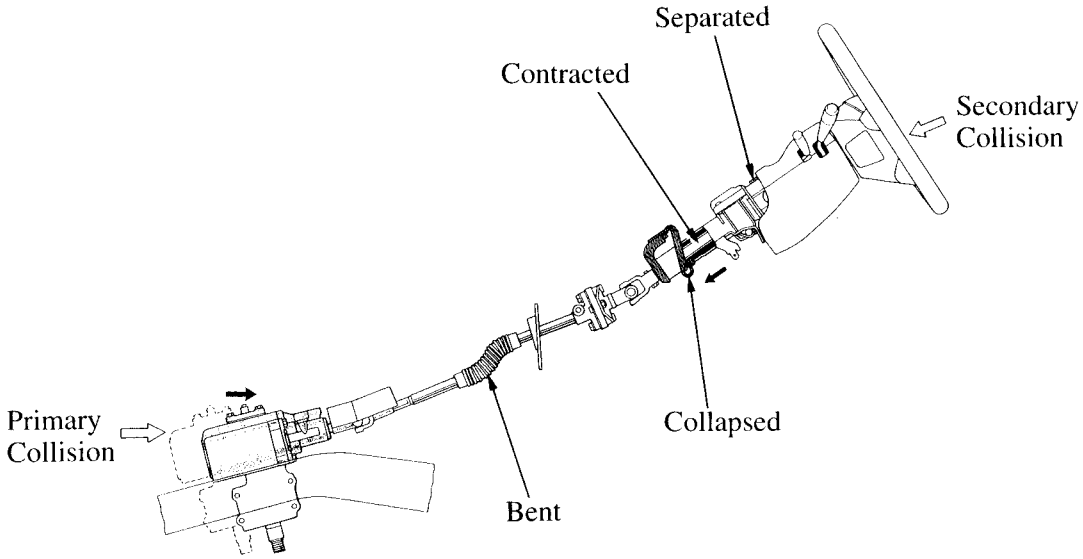

BODY

HIGHLY RIGID BODY

A highly rigid body shell has been realized through the adoption of high strength sheet steel and the improvements to numerous body joining areas.

■ HIGH STRENGTH SHEET STEEL

Light and highly rigid strength sheet steel is used for the hood and door panels, etc.

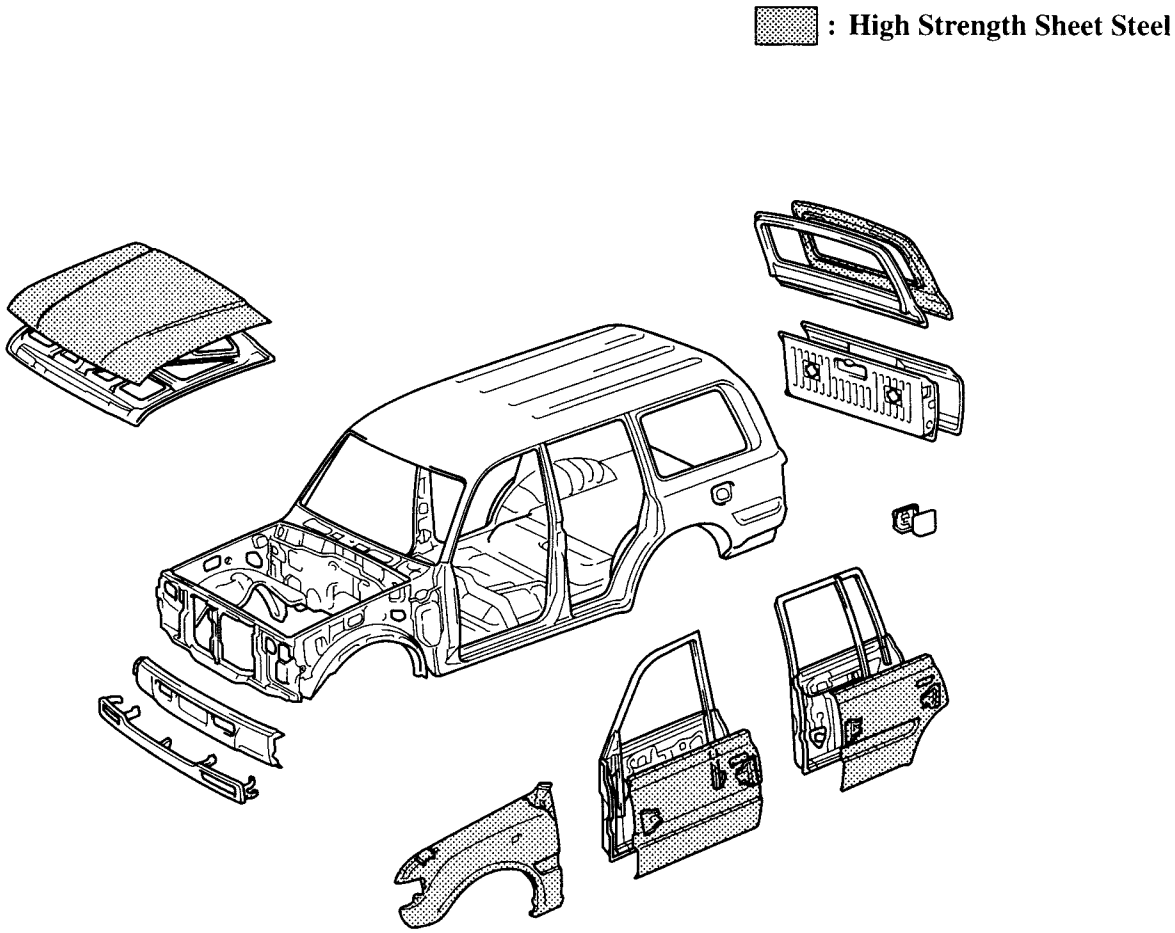

■ BODY SHELL

The joins and the rigidity of each part of the body shell have been strengthened, resulting in reduced vibration and noise and a highly rigid body.

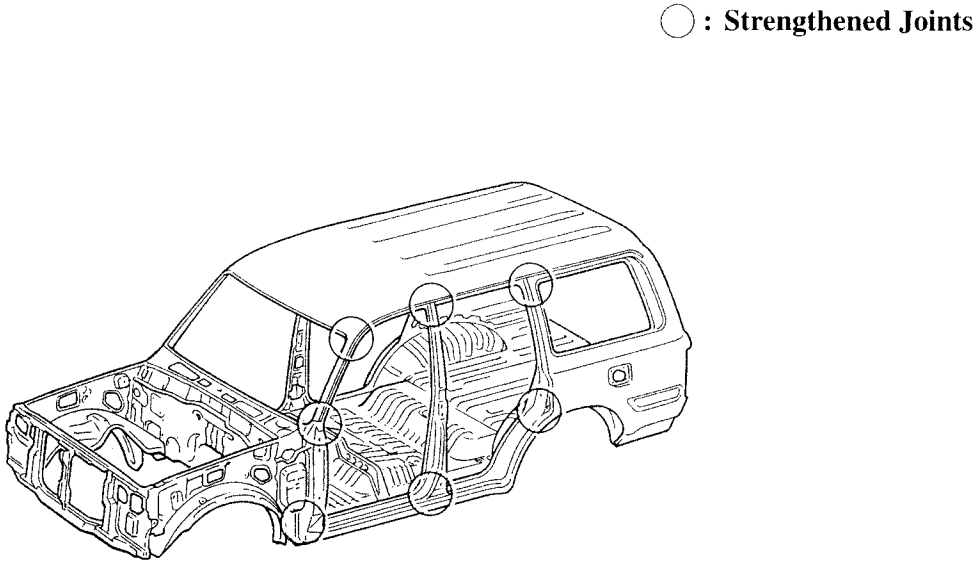

■ DOORS

Pipe type side protection beams are mounted in the center space between the door panels to improve door rigidity.

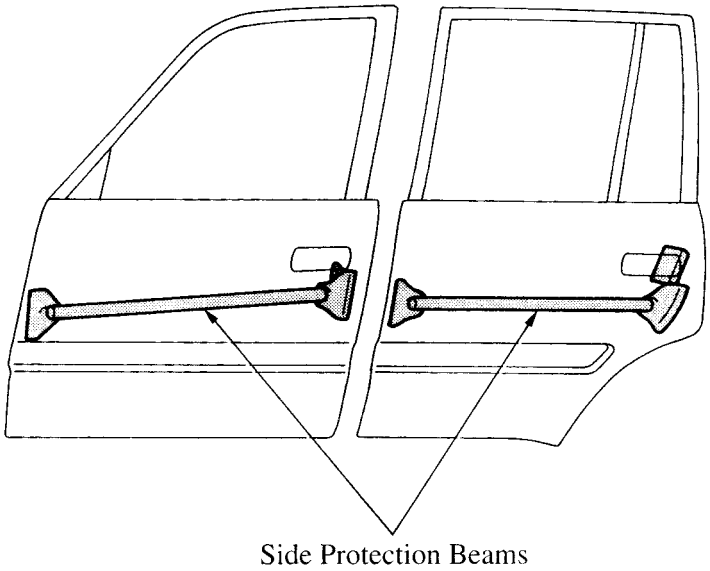

■ FRAME

- The LX450 has adopted a ladder type frame with a closed cross section, thus realizing a lightweight frame with high flexural rigidity.

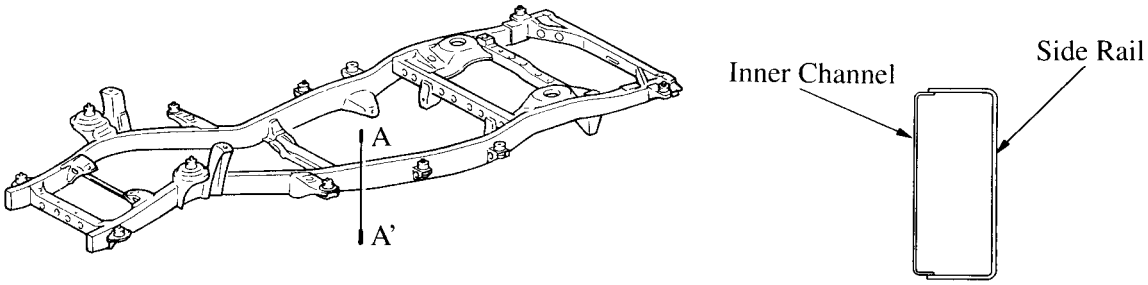

A – A' Cross Section

- To help prevent unintended deployment of the airbags for the driver and front passenger in case of a light frontal collision at low speed, a side rail extension is bolted onto the front edge of the frame, together with the front bumper stay.

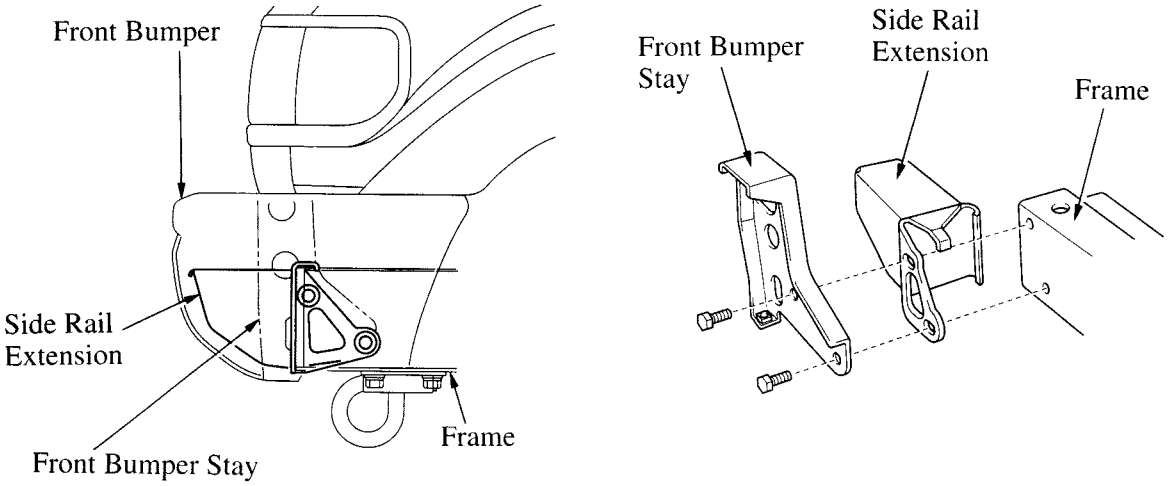

RUST–RESISTANT BODY

Rust–resistant performance is increased by using anti–corrosion sheet steel and performing anti–corrosion treatment by applying wax, sealer, anti–chipping paint, etc. to easily corroded parts such as the hood, doors, rocker panels, etc.

■ ANTI–CORROSION SHEET STEEL

2 types of anti–corrosion sheet steel are used: galvannealed sheet steel and zinc–iron alloy double layer galvannealed sheet steel. Galvannealed sheet steel is used for many inner panels and the engine compartment, etc. Zinc–iron alloy double layer galvannealed sheet steel is used for major outer panels such as the hood, doors and back door.

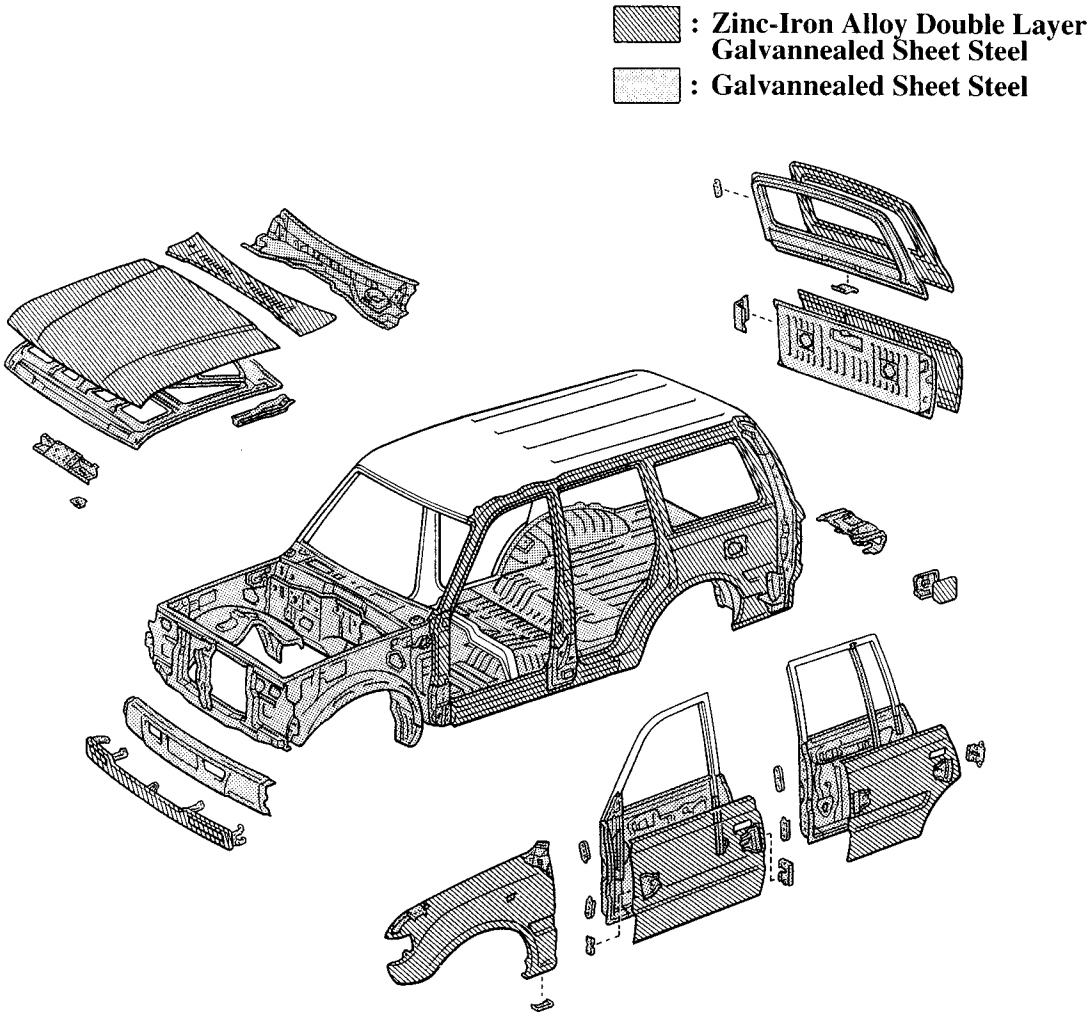

■ WAX AND SEALER

Wax and sealer are applied to the hemmed portions of the hood, door panels and tail gate to improve rust–resistant performance.

■ UNDER COAT

PVC (Polyvinyl Chloride) coating is applied to the under side of the body. The fender apron and other parts which are subject to damage by flying stones, etc. are given a thick coating to improve rust–resistant performance.

: PVC Coating

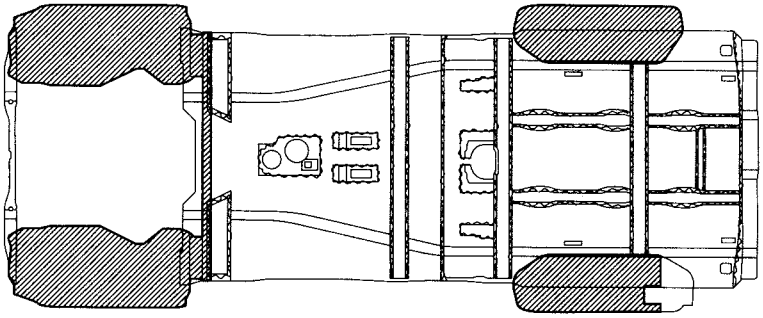

■ ANTI–CHIPPING APPLICATION

Soft–chip primer is applied to hood and front end panels to protect them from flying stones. In addition, PVC chipping primer is applied to the lower quarter panel.

: Soft-Chip Primer
: PVC Chipping Primer

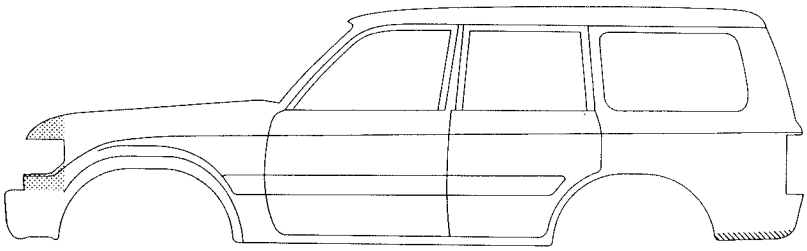

■ OUTSIDE MOULDING AND WHEEL OPENING EXTENSION

An outside moulding has been adopted to protect the bottom of doors from chipping by flying stones. The integration of the outside moulding design with that of the front and rear wheel opening extensions contributes to improve the vehicle's appearance.

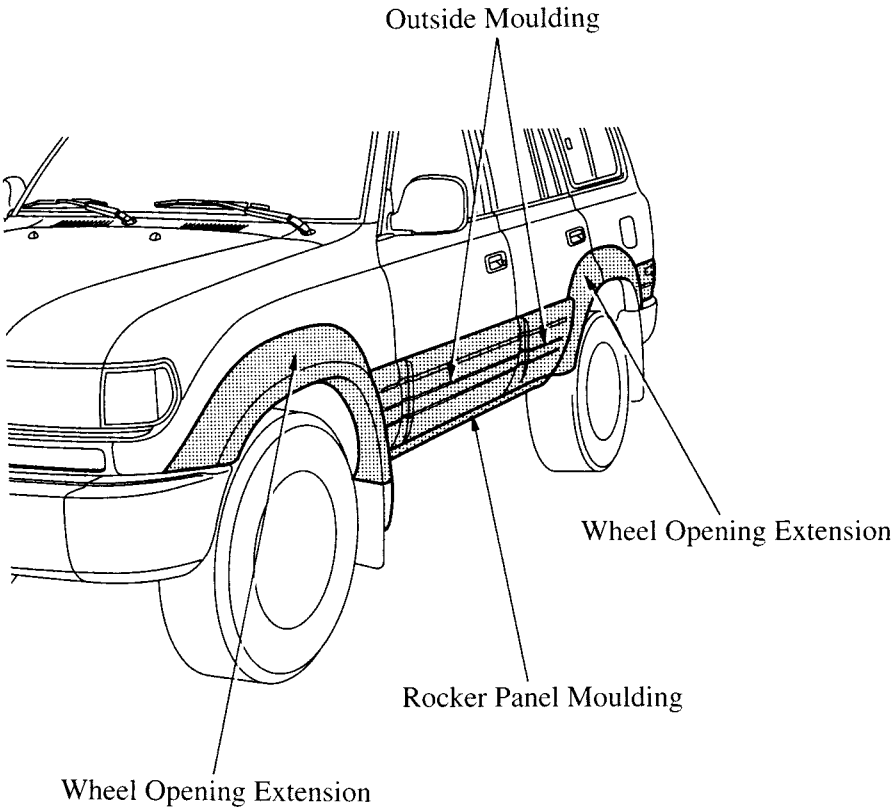

LOW VIBRATION, LOW NOISE BODY

A low–vibration and low noise body has been realized through the effective application of vibration damping and noise suppressant materials.

■ SOUND ABSORBING AND VIBRATION DAMPING MATERIALS

Lightweight asphalt sheet is applied to most of the floor area and asphalt sheet with mica is applied to the rear floor area, thus reducing the engine and road noise during vehicle operation.

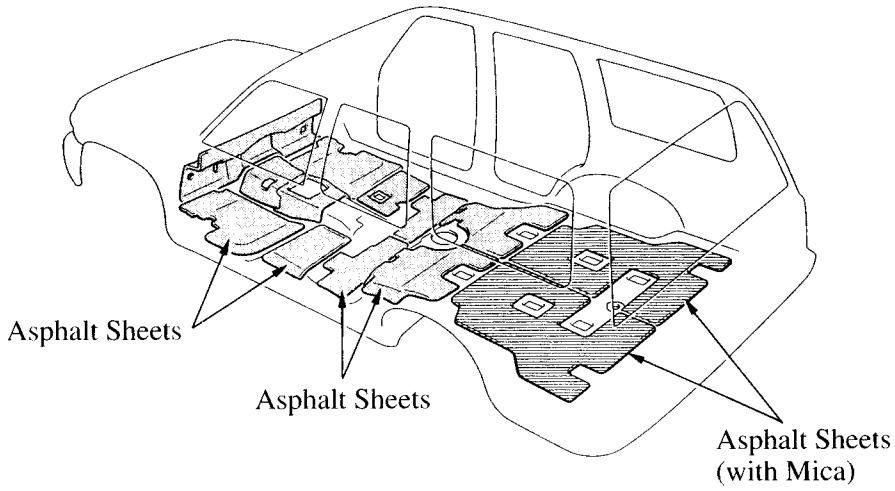

■ BODY MOUNTING

The spring properties of the cushion of each of the body mounts have been optimized in order to improve the vehicle's riding comfort and to reduce noise and vibration.

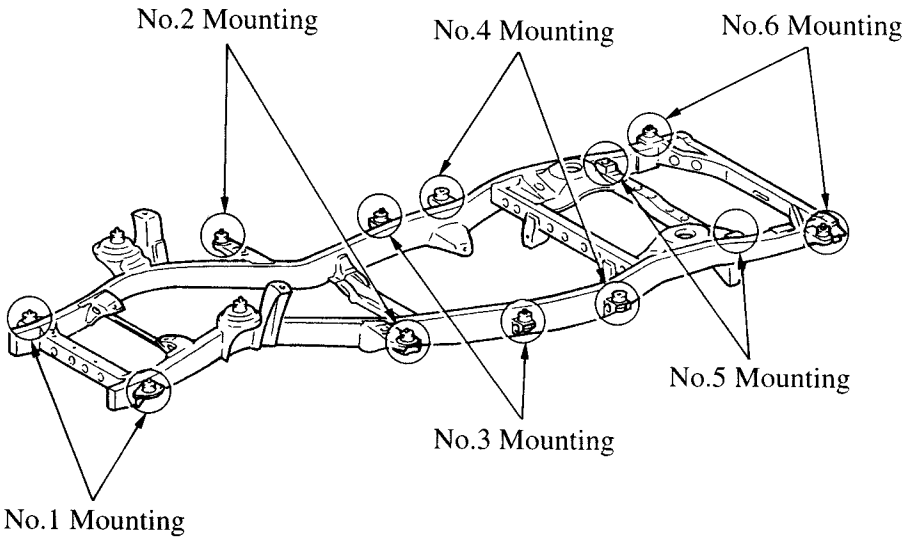

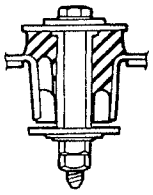

No.1 and 6 Mountings

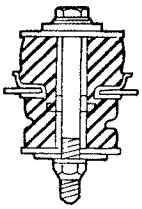

No.2, 3 and 4 Mountings

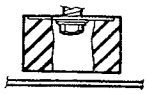

No.5 Mounting

BODY ELECTRICAL

LIGHTING

■ DESCRIPTION

The LX450 has the following features:

System	Outline
Light Auto Turn-Off System	When the ignition key is turned from ON or ACC to LOCK position and the driver's door is opened with the taillights and headlights turned on, this system automatically turns them off. The basic construction and operation are the same as in the '96 GS300.
Illuminated Entry System	This system is useful when entering the vehicle and inserting the ignition key into the key cylinder in the dark. When the driver's door is opened, this system turns on the illuminations around the ignition key cylinder. This illumination remains on for about 5 seconds after the driver's door is closed.

BODY ELECTRICAL

LIGHTING

■ DESCRIPTION

The LX450 has the following features:

System	Outline
Light Auto Turn-Off System	When the ignition key is turned from ON or ACC to LOCK position and the driver's door is opened with the taillights and headlights turned on, this system automatically turns them off. The basic construction and operation are the same as in the '96 GS300.
Illuminated Entry System	This system is useful when entering the vehicle and inserting the ignition key into the key cylinder in the dark. When the driver's door is opened, this system turns on the illuminations around the ignition key cylinder. This illumination remains on for about 5 seconds after the driver's door is closed.

AIR CONDITIONING

■ DESCRIPTION

1. General

The air conditioning system in the LX450 has the following features:

- A fully automatic type air conditioning controlled by and ECU has been adopted.
- A 3–flow level type heater unit, which features lower air flow resistance, is used. In addition, a max. cool damper has been provided to reduce the ventilation resistance when then the temperature control lever is in the max. cool position.
- A drawn cup type evaporator, which has a large passage area for refrigerent and high heat exchanging efficiency, is used.
- A 3–passage flow type condenser with high heat exhange capacity, has been adopted.
- The dome–type solar sensor used can accurately detect solar radiation even when the sun's position in the sky is low.
- An easy–to–use push button type air conditioning control panel is used.
- A defroster–linked air conditioning startup control has been added to automatically engage the air conditioning when the defroster mode has been selected.
- A rear heater is provided as standard equipment to improve the heating performance at the rear seat floor.

▶ Performance ◀

Items		Performance
Heater	Heat Output (W [Kcal/h])	4480 (3850)
	Air Flow Volume (m^3/h)	270
	Power Consumption (W)	140
Air Conditioning	Heat Output (W [Kcal/h])	5810 (5000)
	Air Flow Volume (m^3/h)	520
	Power Consumption (W)	215
Defroster	Air Flow Volume* (m^3/h)	310

▶ Specifications ◀

Model / Item			Specifications
Ventilation and Heater	Heater Core	Type	Dimpled Tube Type
		Size W x H x L mm (in.)	160 x 200 x 49 (6.3 x 7.9 x 1.9)
		Fin Pitch mm (in.)	1.8 (0.07)
	Blower	Motor Type	S80F12T
		Fan Size Dia. x H mm (in.)	150 x 65 (5.9 x 2.6)
Front Air Conditioning	Condenser	Type	3–Passage Flow Type
		Size W x H x L mm (in.)	363 x 706 x 22 (14.3 x 27.8 x 0.9)
		Fin Pitch mm (in.)	4.0 (0.16)
	Evaporator	Type	Drawn Cup Type
		Size W x H x L mm (in.)	279 x 260 x 105 (11.0 x 10.2 x 4.1)
		Fin Pitch mm (in.)	4.0 (0.16)
	Compressor	Type	10PA17
	Refrigerant	Type	HFC134a (R134a)

▶ Performance and Specifications of Rear Heater◀

Items			Performance and Specifications
Rear Heater	Heat Output (W [Kcal/h])		1860 [1600]
	Air Flow Volume (m^3/h)		110
	Power Consumption (W)		50
	Heater Core	Type	Flat Tube Type
		Size W x H x L mm (in.)	102.5 x 130 x 49 (4.0 x 5.1 x 1.9)
		Fin Pitch mm (in.)	3.5 (0.14)
	Blower	Motor Type	50F23T
		Size Dia. x H mm (in.)	115 x 60 (4.5 x 2.4)

2. Layout of Components

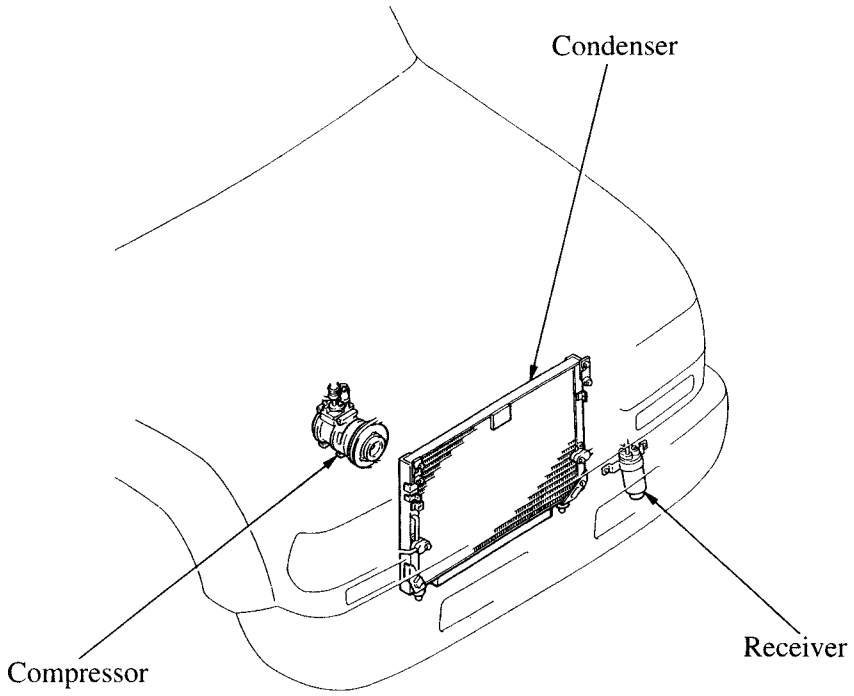

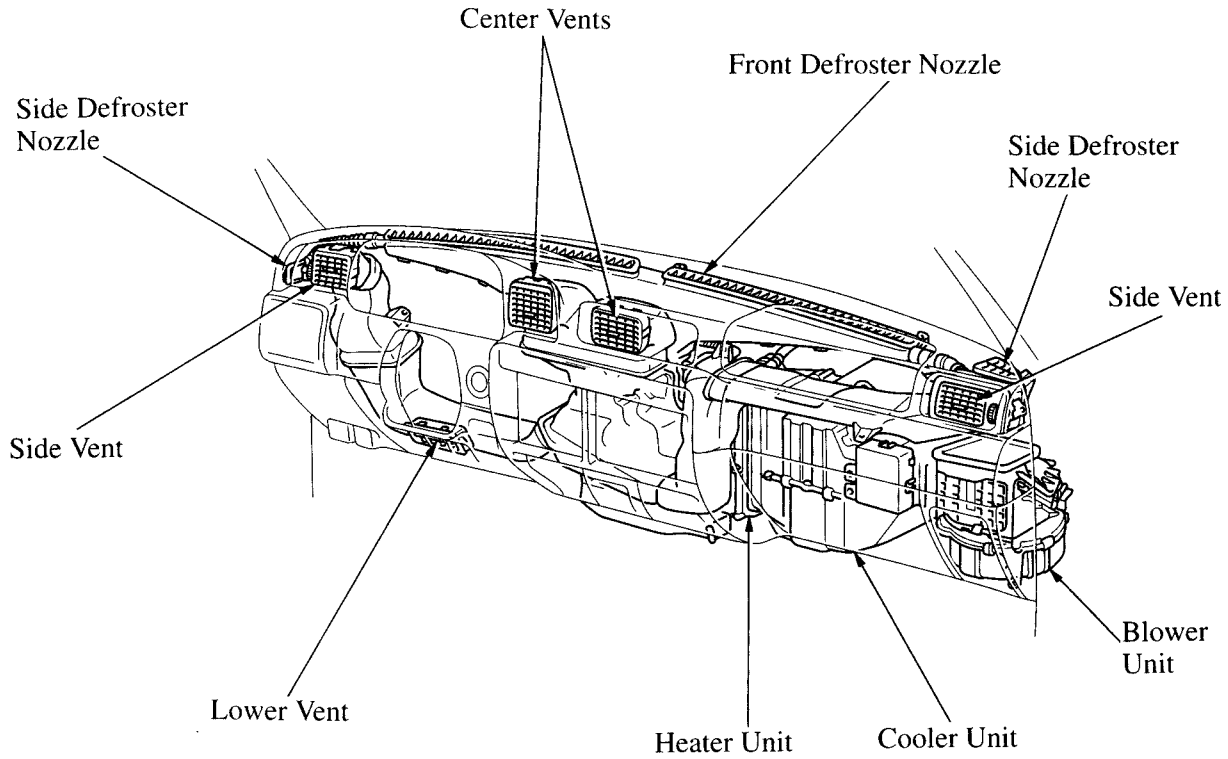

3. Damper Position and Air Flow Relationship

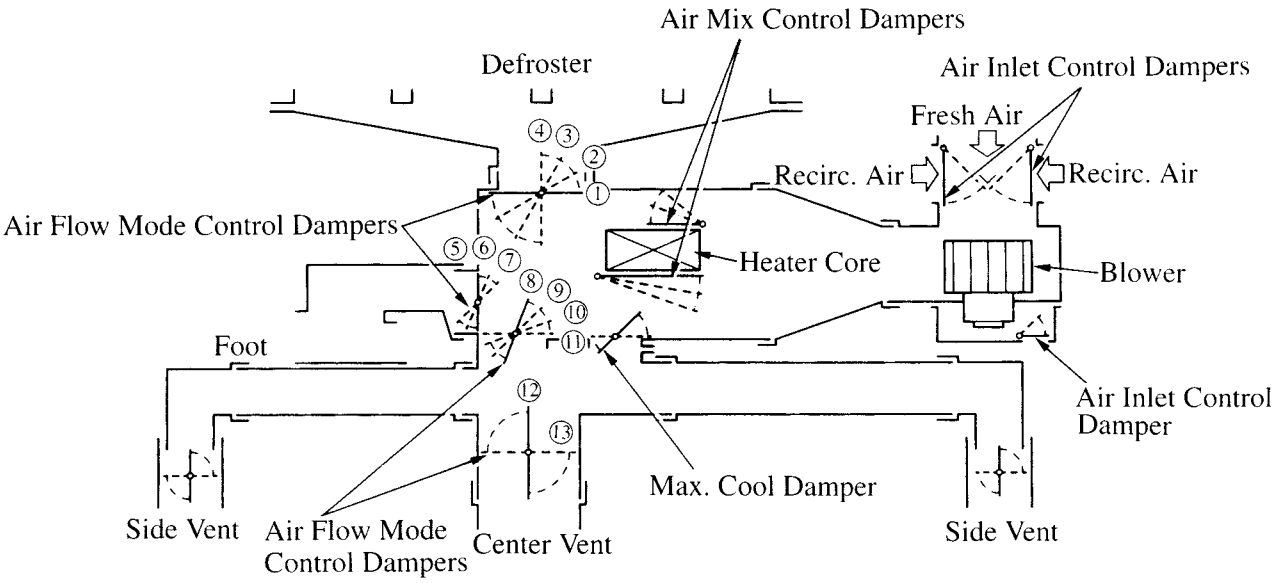

Air Outlet Mode		Mode Control Damper Position	Air Flow Vents			
			Center	Side	Foot	Def.
Face		①, ⑤, ⑧, ⑫	○	○		
Bi-Level		①, ⑥, ⑨, ⑫	○	○	○	
Foot		②, ⑦, ⑪, ⑬		○	○	○
Foot/Def.		③, ⑥, ⑩, ⑬		○	○	○
Def.		④, ⑤, ⑩, ⑬		○		○

The size of the circle ○ indicates the proportion of airflow volume.

■ CONSTRUCTION AND OPERATION

1. Air Conditioning Control Panel

An easy–to–use push button type air conditioning control panel is used. This control panel is located in the center of the instrument panel closer toward the driver's seat to improve utility.

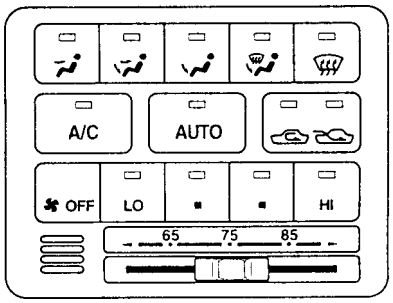

2. Heater Unit

A 3–flow level, full–air mix type heater unit is used. The heater unit is equipped with a max. cool damper to reduce ventilation resistance.

The heater core used is a dimple tube type which offers excellent heat transfer efficiency.

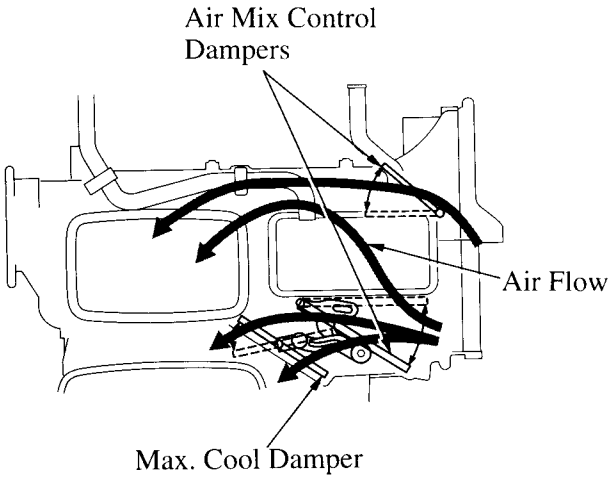

3. Cooler Unit

Drawn Cup Type Evaporator

The evaporator used is the drawn cup type similar to that used in the GS300 featuring excellent heat exchange performance.

4. Condenser

The 3–passage flow type condenser has 3 passages for the refrigerant resulting in greater heat exhange capability.

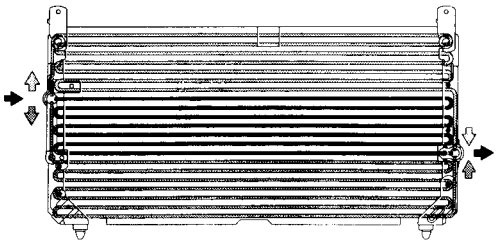

5. Solar Sensor

A dome–type solar sensor can accurately detect the amount of solar radiation even when the sun's position in the sky is low.

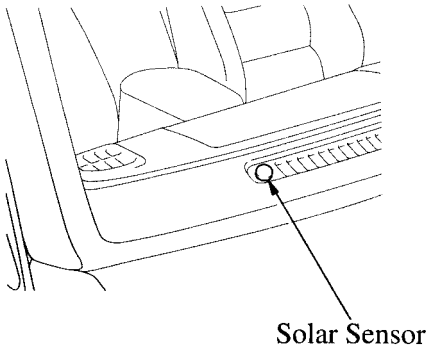

6. Rear Heater Unit

The rear heater unit has adopted a thin configuration and has been mounted under the front passenger seat.

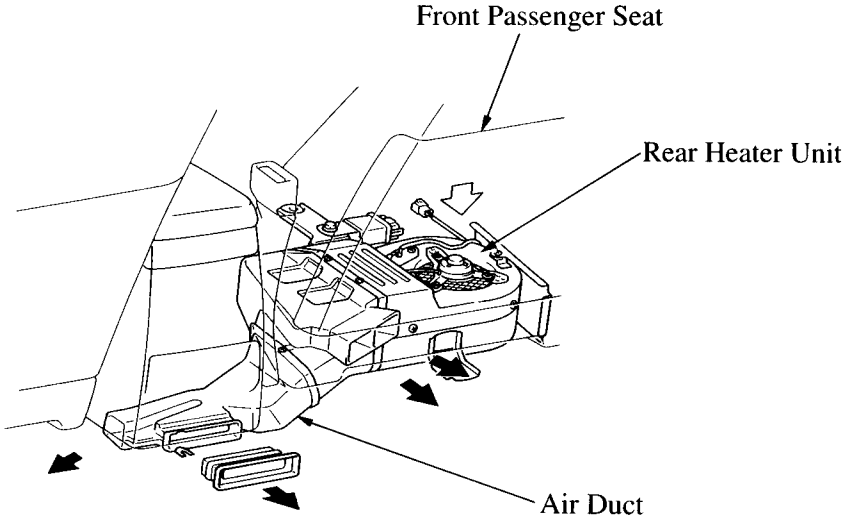

7. Rear Heater Switch

The rear heater switch has been located below the air conditining control panel. This seesaw type switch is used to set the rear heater airflow to one of the two speeds.

The switch is also provided with indicators to show the operating condition of the rear heater.

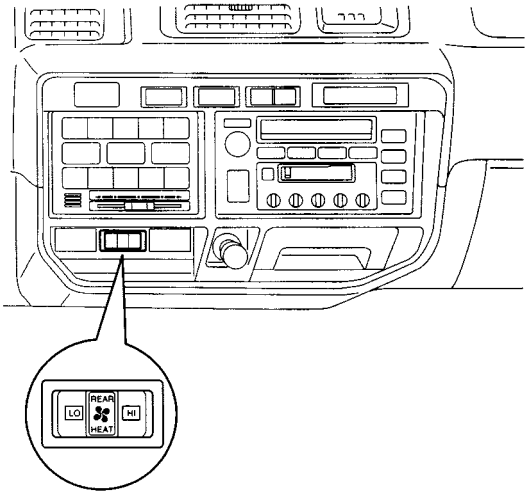

Rear Heater Switch

8. Air Conditioning ECU

The air conditioning ECU is mounted on the side of the heater unit. This system automatically regulates the servomotors and blower motor to deliver the required outlet air temperature in accordance with the set temperatue.

The following table is a comparison of the air conditioning ECU functions between the LX450 and ’96 GS300:

System	Function	LX450	’96 GS300
Calculation of Required Outlet Air Temperature	Calculates the required outlet air temperature based on the set temperature, room air temperature, ambient air temperature and solar radiation.	○	○
Temperature Control	To drive the air mix servomotor in accordance with the required outlet air temperature, the air temperature passed through the evaporator and the engine coolant temperature and to control the outlet air temperature (Air Mix Damper Control).	○	○
Blower Control	Sets the blower speed according to operation of the blower switch (Manual Control).	○ (4-step)	○ 4-step)
	When the automatic control or front defroster switch is turned on, the blower starts. Then the blower speed that is appropriate for the required outlet air temperature is compared with the blower speed that is appropriate for solar radiation, and the blower is controlled at the faster of the two speeds (Automatic Control). However, when the coolant temperature is below a predetermined level and the air outlet is in the “foot” or “bi-level” mode, the blower will not operate (Warm-Up Control).	○	○
	When the air outlet mode is at “face” or “manual bi–level” and the required outlet air temperature is below a predetermined level, the blower is set to operate after a time lag in order to prevent hot air from being blown out suddenly right after the engine is started (Time–Lagged Air Flow Control).	○	—
	When the air outlet mode is at “face” and the required outlet air temperature is below a predetermined level, the blower is set to operate after a time lag in order to prevent hot air air from being blown out suddenly right after the engine is started (Time–Lagged Air Flow Control).	—	○
	When the mobile telephone is being used, the blower speed is slowed down to reduce blower noise (Telephone Control)	○	—

System	Function	LX450	’96 GS300
Air Inlet Control	Drives the air inlet servomotor according to the operation of the air inlet control switch and fixes the dampers in the “fresh” or “recirc.” position (Manual Control).	○	○
	Switches the damper position between “fresh”, or “recirc.” according to the required outlet air temperature (Automatic Control).	○	—
	Switches the damper position between “fresh”, “fresh and recirc. mix” or “recirc.” according to the required outlet air temperature (Automatic Control).	—	○
	Fixes the damper position at “fresh” if the front defroster switch is turned on during automatic control (Forced Fresh Air Intake Control).	○	○
Air Outlet Control	Drives the air outlet servomotor in accordance with the operation of the mode select and front defroster switches and fixes the dampers in the “face”, “bi-level”, “foot”, “foot and def.” or “def.” position (Manual Control).	○	○
	Switches the damper position between “face”, “bi-level” of “foot” according to the required outlet air temperature (Automatic Control).	○	○
	Opens and closes the max. cool damper steplessly in response to operation of the air mix servomotor in order to increase or decrease the air outlet volumne from the vents (Max. Cool Control).	○	○
	When the air outlet is in the “foot” mode and the blower is under warm–up control, this drives the air outlet servomotor, switches the dampers to the “def.” position, and prevents cool air from leaking from the foot vent (Def.-Foot Control).	○	○
Compressor Control	If the A/C switch is switched on while the blower is turned on, this turns on the magnetic clutch relay and operates the compressor (Manual Control).	○	○
	When the AUTO switch is pressed, the magnetic clutch relay is turned on (Automatic Control).	○	○
	Switches the magnetic clutch relay off when the engine speed is below 300 rpm, when the blower is turned off by the warm-up control, or when the refrigerant pressure is abnormally high or low (Abnormal Condition Detection).	—	○
	Turning the front defroster switch ON activates the magnetic cluthch relay, which in turn, engages the compresssor and changes the air inlet mode to the FRESH position (Defroster–Linked Control).	○	○
	Compares the engine speed and compressor speed. If it is judged that the compressor is locked, the magnetic clutch relay goes off and the A/C switch indicator light blinks to warn the driver (Compressor Lock Detection).	—	○

System	Function	LX450	’96 GS300
Electric Fans Control	Switches the three fan relays on and off in accordance with compressor operation, coolant temperature and refrigerant pressure and operates the fan in 3 steps (stop, low speed, high speed).	—	○
Rear Defogger Control	Switches the rear defogger and outside rear view mirror heaters on for 15 minutes when the rear defogger switch is switched on. Switches them off if the switch is pressed while they are operating.	—	○
Self-Diagnosis	Checks the sensors in accordance with operation of the air conditioning switches, then displays a code No. and sounds a buzzer to indicate if there is a malfunction or not (Sensor Check Function).	—	○ (13 items)
	Drives the actuators through a predetermined sequence in accordance with the operation of the air conditioning switches (Actuator Check Function).	—	○ (6 items)

ACCESSORIES

■ DESCRIPTION

The LX450 includes the accessory systems shown in the following table.

System	Outline
Power Window	The power window system includes one-touch auto down and key-off operation functions. The one-touch auto down function automatically opens the driver's door window fully. The key-off operation function makes it possible to operate the power windows for approximately 60 seconds after the ignition key is turned to the ACC or LOCK position, if the front doors are not opened. The basic operation of this system is the same as in the'96 GS300.
Door Lock Control System	This system has a "key-linked lock and unlock function" and a "key-confine prevention function". All doors can be locked and unlocked simultaneously by a key operation at the front fight or left door (the key needs to be operated twice to unlock all the doors at the driver's door). If the door lock operation is performed when one of the front doors is open and the ignition key inserted in the key cylinder, doors are unlocked automatically to prevent the ignition key from being left inside the vehicle. The basic operation of this system is the same as in the '96 GS300.
Theft Deterrent System	While the system is set, the system is triggered when a door is opened, or when a window is tapped on or broken. When the system is triggered, the theft deterrent system sounds the horn and the parking and interior lights flash in a unique pattern. At the same time, electronically disconnects the starter. For details, see page 124.
Power Seat	As in the '96 GS300, the front seats are power assisted by electric motors so that the seat positions can be adjusted easily by a simple switch operation. The basic operation of this system is the same as in the '96 GS300.
Outside Rear View Mirror	The outside rear view mirrors are the electrical remote control type, the same as the '96 GS300. However, the internal heater to remove water drops from the mirror surface is not provided with the mirrors on the LX450. The basic construction and operation are the same as in the '96 GS300.
SRS Airbag	The SRS (Supplemental Restraint System) airbag is provided for the driver and front passenger as a supplement to the seat belt. The SRS airbag has been designed to help lessen the shock to the face and head of the driver and front passenger in a severe frontal impact in the event of a collision. A 1-sensor type airbag system is used in which the detection of deceleration during a collision as well as control of the airbag system, is accomplished by the airbag sensor assembly. The basic construction and operation are the same as in the '96 LS400.
Cruise Control System	Once it has been set at desired vehicle speed, this system automatically adjusts the engine throttle position to maintain the vehicle speed at the desired speed without operating the acceleration pedal. The basic operation of this system is the same as in the '96 LS400.

System	Outline
Moon Roof	A tilt-up and sliding type moon roof is used in the LX450. This system includes “key–off operation”, which is the same as with the power window system. The basic construction and operation are the same as in the ’96 GS 300.
Key Reminder System	When the driver’s door is opened with the ignition key in ACC or LOCK position, this system sounds a buzzer to warn the driver that the ignition key has not been removed. The basic construction and operation are the same as in the ’96 GS 300.

■ THEFT DETERRENT SYSTEM

1. Description

While the theft deterrent system is set, the system is triggered when a door is opened, or when a window is tapped on or broken, or when the battery terminals are removed and reconnected, the theft deterrent system sounds the horn and flashes the parking light and interior light in a unique pattern for about 1 minute to alert.

At the same time, it electrically disconnects the starter.

In addition, a transmitter can be used to set/unset the theft deterrent system, as well as to lock/unlock all doors. Thus, this system also provides the functions of a wireless door lock remote control system.

▶ System Diagram ◀

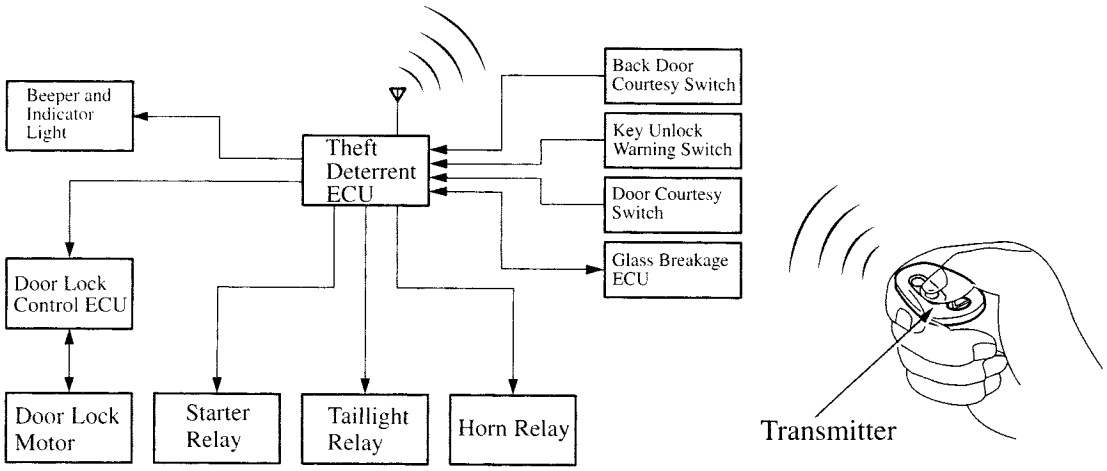

2. Layout of Functional Parts

The functional parts of the theft deterrent system are shown below.

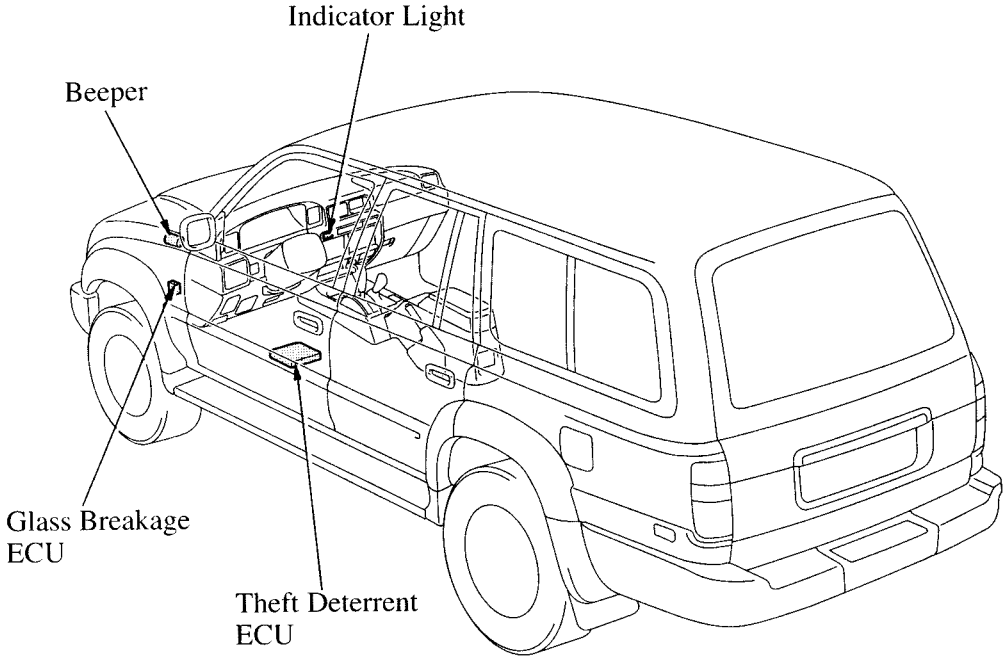

3. Wiring Diagram

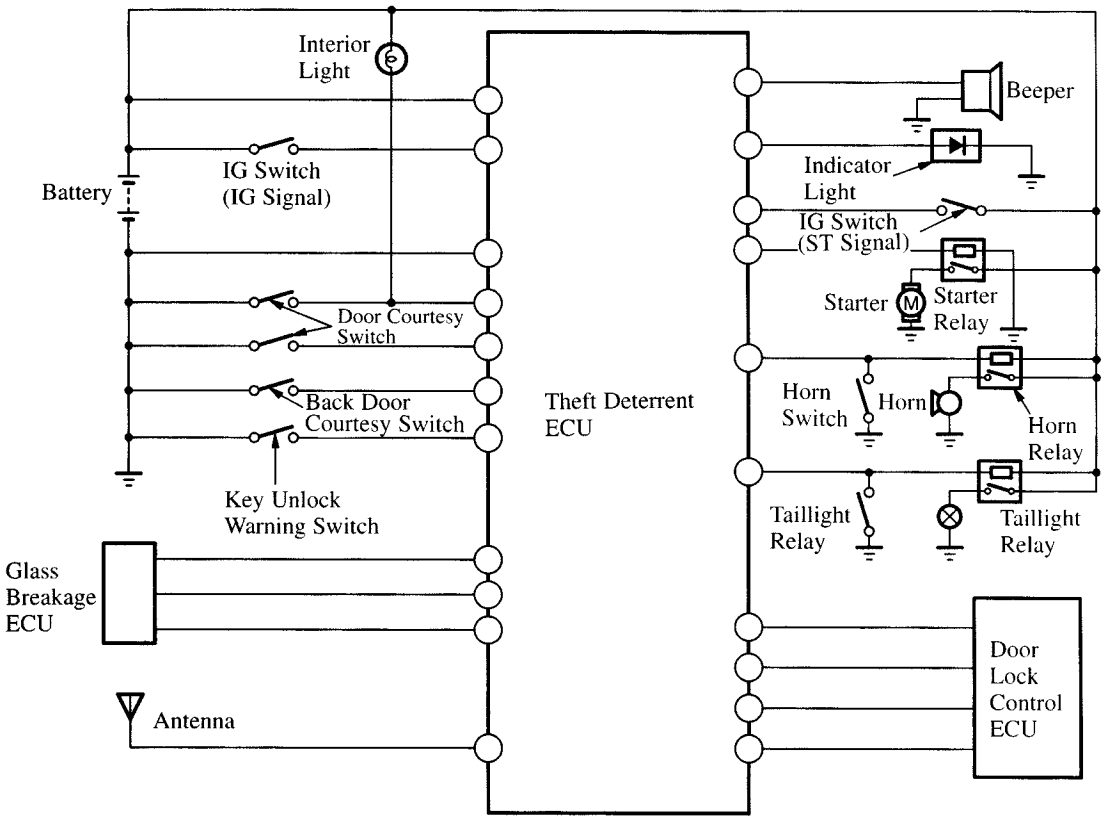

4. Construction

Transmitter

For ease of use, the transmitter is the key–holder type that is separate from the ignition key.

Pressing the transmitter button locks/unlocks all doors and sets/unsets the theft deterrent system.

Similarly, it can be used to activate the panic alarm operation and to activate/deactivate the beeper.

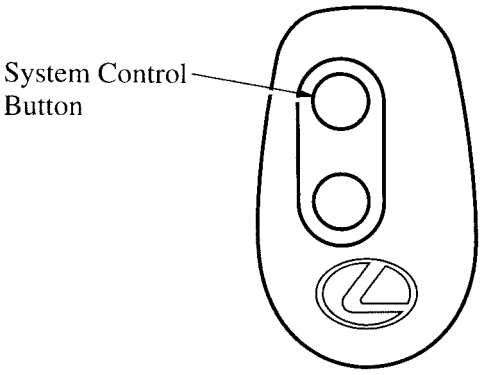

Transmitter

5. Operation

Setting the Theft Deterrent System

2 types of theft deterrent system settings are available: the automatic setting and the remote setting.

1) Automatic Setting

When the system is set to automatic setting and the vehicle meets the conditions given below, the theft deterrent ECU turns on the indicator lights and sets the theft deterrent system 15 seconds later (exit delay time) by a timer function.

Remove the key from the key cylinder. Exit the vehicle, and close all entry points (doors and back doors).

If any of the conditions given above is interrupted, such as opening the back door within the exit delay time (see the next page), the timer resets itself. Then, when the conditions are met again, the ECU resets the system after 15 seconds.

When the theft deterrent system is set automatically, the parking lights and the beeper will turn on for 2 seconds. Also, the indicator light in the instrument panel changes from being on to flashing thus informing the driver that the system has been set.

2) Remote Setting

When the theft deterrent system is set to a mode other than the theft deterrent OFF mode, the system can be set by operating the transmitter button.

Pressing the transmitter button causes the theft deterrent ECU to lock all doors, and 2 seconds later, the ECU sets the theft deterrent system. However, the system cannot be set by remote setting if the vehicle is in the conditions given below:

- The ignition key is inserted in the key cylinder.
- If any of the doors, including the back door, is open or ajar.

After all doors are locked by a transmitter button operation, the interior light turns on for 3 seconds.

At the same time, the parking lights flash once, and the beeper beeps once to inform the driver that the system has been set. In addition, the indicator light flashes after the theft deterrent system is set.

Unsetting the Theft Deterrent System

There are 2 methods for unsetting the theft deterrent system: turning on the ignition switch with a ignition key or operating the transmitter button.

1) Unsetting by Using the Key

When the theft deterrent system is set by the automatic setting function, the theft deterrent system unsets if the ignition switch is turned ON within the entry delay time after the door has been opened.

2) Unsetting by Using the Transmitter

If the theft deterrent system is set by remote setting, pressing the transmitter button causes the theft deterrent ECU to unset the system immediately and unlock all doors. After all doors are unlocked, the interior light will turn on fro 20 seconds. At the same time, the parking lights will flash twice and the beeper will sound twice to inform that the system has been unset.

Theft Deterrent System

When the system is set to the theft deterrent system and any of the following conditions are met, the system sounds the horn and flashes the parking light and interior lights for about 1 minute. At the same time, the system disconnects the starter motor circuit.

▶ Conditions◀

- The ignition switch is not turned ON within the entry delay time*1 after the door is opened. (When the theft deterrent system is set by automatic setting.)
- When the door is opened. (When the theft deterrent system is set by remote setting.)
- When a window glass is tapped by a metal object (such as a key)*2
- The battery terminal is disconnected and reconnected.

*1: The standby time from the the detection of a door opening by the system to the time to start the alarm.

*2 The tapping of a window is detected for the first time, the system sounds the horn 3 times and flashes the parking lights 3 times. If the tapping is detected again within 5 seconds, the system will activate theft deterrent operation.

Door Lock Control Function

The doors can be locked and unlocked by operating the ignition switch as described below.

1) Door Lock Operation with Ignition Switch ON

After all doors are closed, the doors are locked automatically only if the the ignition switch is turned from LOCK to ON for the first time. This operation will be repeated if any of the doors is opened and closed.

2) Door Unlock Operation with the Ignition Switch OFF

After all doors are locked by the door lock operation described in step “1”, the doors will be unlocked automatically at the first time when the ignition switch is turned from ON to LOCK. This operation will not take place if any of the doors is opened before the ignition switch is turned to LOCK.

3) Switching the Door Lock Control Function ON/OFF

The door lock operation with the ignition switch ON, and the door unlock operation with the ignition switch OFF can be stopped and resumed by operating the ignition and opening and closing the doors.

See the Lexus LX450 Theft Deterrent System Troubleshooting Guide, for details to stop and resume the door lock control function.

Operation Memory Function

In case of a theft deterrent operation while the theft deterrent system is being set, the parking lights will flash 3 times when the theft deterrent system is unset by turning the ignition switch or operating the transmitter.

Interior Light Function

The interior light turns on for 30 seconds at the same time when the doors are unlocked by transmitter operation. Then, the interior light will turn off if a door is opened and the ignition key is inserted in the key cylinder within 30 seconds.

Auto Lock Function

If none of the doors are opened within 30 seconds after they are unlocked by a transmitter operation, all the doors are locked again and the theft deterrent system will be set automatically.

Panic Alarm Function

Keeping the switch of the transmitter pressed longer than 2 seconds activates the alarm of the theft deterrent system (to sound the horn and flash the parking lights and interior light).

Door Ajar Warning

Pressing the switch of the transmitter when any door is open or ajar causes the beeper to beep for 10 seconds.

The beeper will stop beeping if the doors are completely closed or if the ignition key turns ON within 10 seconds.

Changing the Length of Entry Delay Time

The entry delay time is the period from the time when a door is opened until the theft deterrent operation is activated while the theft deterrent system is set by the automatic setting function. 3 lengths of time are available for setting the entry delay time: 5, 15, and 30 seconds. The entry delay time setting can be changed by operating the ignition switch and closing and opening a door.

See Lexus LX450 Theft Deterrent System Troubleshooting Guide, for details to change the, entry delay time.

Changing Theft Deterrent System Settings

3 types of theft deterrent system settings are available: the automatic and remote setting ON, the remote setting ON, and the automatic and remote seetting OFF (with the theft deterrent system OFF). These settings can be changed by operating the ignition switch and the transmitter buton.

See the Lexus LX 450 Theft Deterrent Ssystem Troubleshooting Guide, for details on how to turn the beeper ON/OFF.

Turning the Beeper ON/OFF

The beeper sounds when the theft deterrent system is set, thus informing the system's operation status to the driver. The beeper can be turned ON or OFF by operating the ignition switch and transmitter button.

See the Lexus LX450 Theft Deterrent System Troubleshooting Guide, for details on how to turn the beeper ON/OFF.

Deleting and Registering a Transmitter Recognition Code

The recognition code for each transmitter is registered in the theft deterrent ECU, which can store up to 4 different recognition codes. A recognition code can be deleted or registered by operating the ignition switch and the transmitter button.

See the Lexus LX450 Theft Deterrent System Troubleshooting Guide, for details to delete and register a recognition code.

MAJOR TECHNICAL SPECIFICATIONS

Item			Area	U.S.A.
Body Type				Wagon
Vehicle Grade				—
Model Code				FZJ80L–GNPGKA
Major Dimensions & Vehicle Weights	Overall	Length	mm (in.)	4820 (189.8)
		Width	mm (in.)	1930 (76.0)
		Height*	mm (in.)	1870 (73.6)
	Wheel Base		mm (in.)	2850 (112.2)
	Tread	Front	mm (in.)	1595 (62.8)
		Rear	mm (in.)	1600 (63.0)
	Effective Head Room	Front	mm (in.)	1024 (40.3), 980 (38.6)*1
		Rear	mm (in.)	*2
	Effective Leg Room	Front	mm (in.)	1060 (41.7)
		Rear	mm (in.)	833 (32.8),*3, 823 (32.4)*4
	Shoulder Room	Front	mm (in.)	1490 (58.7)
		Rear	mm (in.)	1490 (58.7)
	Cargo Space	Length	mm (in.)	1185 (46.7)
		Width	mm (in.)	1119 (44.1)
		Height	mm (in.)	1072 (42.3)
	Overhang	Front	mm (in.)	830 (32.7)
		Rear	mm (in.)	1140 (44.9)
	Min. Running Ground Clearance		mm (in.)	275 (10.8)
	Angle of Approach		degrees	33
	Angle of Departure		degrees	22
	Curb Weight	Front	kg (lb)	1180 (2601)
		Rear	kg (lb)	1075 (2370)
		Total	kg (lb)	2255 (4971)
	Gross Vehicle Weight	Front	kg (lb)	—
		Rear	kg (lb)	—
		Total	kg (lb)	2905 (6404)
	Fuel Tank Capacity		l (U.S. gal., Imp. gal.)	95 (25.1, 20.9)
	Luggage Compartment Capacity		m^3 (cu.ft.)	—
Performance	Max. Speed		km/h (mph)	175 (109)
	Max. Cruising Speed		km/h (mph)	140 (87)
	Max. Permissible Speed	1st Gear	km/h (mph)	22 (14)*5, 56 (35)*6
		2nd Gear	km/h (mph)	44 (27)*5, 109 (68)*6
		3rd Gear	km/h (mph)	67 (42)*5, 167 (104)*6
		4th Gear	km/h (mph)	—
	Turning Diameter (Outside Front)	Wall to Wall	m (ft.)	12.8 (42.0)
		Curb to Curb	m (ft.)	12.3 (40.4)
Engine	Engine Type			1FZ–FE
	Valve Mechanism			24–Valve, DOHC
	Bore x Stroke		mm (in.)	100.0 x 95.0 (3.94 x 3.74)
	Displacement		cm^3 (cu.in.)	4477 (273.1)
	Compression Ratio			9.0
	Carburetor Type			SFI
	Research Octane No.		RON	91
	Max. Output (SAE–NET)		kW/rpm (HP@rpm)	158/4600 (212 @ 4600)
	Max. Torque (SAE–NET)		N·m/rpm (lb–ft@rpm)	373/3200 (275 @ 3200)
Engine Electrical	Battery Capacity (5HR)		Voltage & Amp. hr.	12–64, 12–56*7
	Generator [Alternator] Output		Watts	960
	Starter Output		kW	2.0, 1.4*7
Chassis	Clutch Type			—
	Transmission Type			A343F
	Transmission Gear Ratio	In First		2.804
		In Second		1.531
		In Third		1.000
		In Fourth		0.753
		In Fifth		—
		In Reverse		2.393
	Transfer Gear Ratio H4/L4			1.000/2.488
	Differential Gear Ratio (Front/Rear)			4.100/4.100
	Differential Gear Size (Front/Rear)		in.	8”/9.5”
	Brake Type	Front		Ventilated Disc
		Rear		Ventilated Disc
	Parking Brake Type			Duo–Servo
	Brake Booster Type and Style		in.	Tandem 8” + 9”
	Proportioning Valve Type			LSP & BV
	Suspension Type	Front		Leading Arm, Coil
		Rear		4 Links, Coil
	Stabilizer Bar	Front		STD
		Rear		STD
	Steering Gear Type			Recerculating Ball
	Steering Gear Ratio (Overall)			18.59
	Power Steering Type			Integral Type

*2	Center Seat	Outer Seat
w/o Moon Roof	1008 (39.7)	1009 (39.7)
w/ Moon Roof	963 (37.9)	960 (37.8)

* : Unladen Vehicle *1: With Moon Roof *3: Outer Seat *4: Center Seat

*5 : Transfer in Low *6: Transfer in High *7: Option

CAUTION

This manual does not include all the necessary items about repair and service. This manual is made for the purpose of the use for the persons who have special techniques and certifications. In the cases that non-specialized or uncertified technicians perform repair or service only using this manual or without proper equipment or tool, that may cause severe injury to you or other people around and also cause damage to your customer's vehicle.

In order to prevent dangerous operation and damage to your customer's vehicle, be sure to follow the instruction shown below.

- Must read this manual thoroughly. It is especially important to have good understanding all the contents written in the PRECAUTION of "IN" section.
-
- The service method written in this manual is very effective to perform repair an service. When performing the operations following the procedures using this manual, be sure to use tools specified and recommended. If using non-specified or recommended tools and service method, be sure to confirm safety of the technicians and any possibility of causing personal injury or damage to the customer's vehicle before starting operation.
-
- If part replacement is necessary, must replace the part with the same part number or equivalent part. Do not replace with inferior quality.
-
- It is important to note that this manual contains various " Cautions" and "Notices" that must be carefully observed in order to reduce the risk of personal injury during service or repair, or the possibility that improper service or repair may damage the vehicle or render it unsafe. It is also important to understand that these "Cautions" and "Notices" are not exhaustive, because it is important to warn of all the possible hazardous consequences that might result from failure to follow the instructions

FOREWORD

This repair manual covers Disassembly, Inspection and Assembly procedures for the following Automatic Transmission:

Automatic Transmission	Applicable Model
A343F	LEXUS LX450

For On-vehicle Servicing (Inspection, Adjustment, Troubleshooting, Removal and Installation) of the Automatic Transmission, refer to the repair manual for the applicable vehicle model.

All information contained in this manual is the most up-to-date at the time of publication. However, specifications and procedures are subject to change without notice.

TOYOTA MOTOR CORPORATION

©1995 TOYOTA MOTOR CORPORATION
All rights reserved. This book may not be reproduced or copied, in whole or in part, without the written permission of Toyota Motor Corporation.

HOW TO USE THIS MANUAL

To assist you in finding your way through the manual, the Section Title and major heading are given at the top of every page.

PREPARATION

Preparation lists the SST (Special Service Tools), recommended tools, equipment, lubricant and SSM (Special Service Materials) which should be prepared before beginning the operation and explains the purpose of each one.

REPAIR PROCEDURES

Most repair operations begin with an overview illustration. It identifies the components and shows how the parts fit together.
Example:

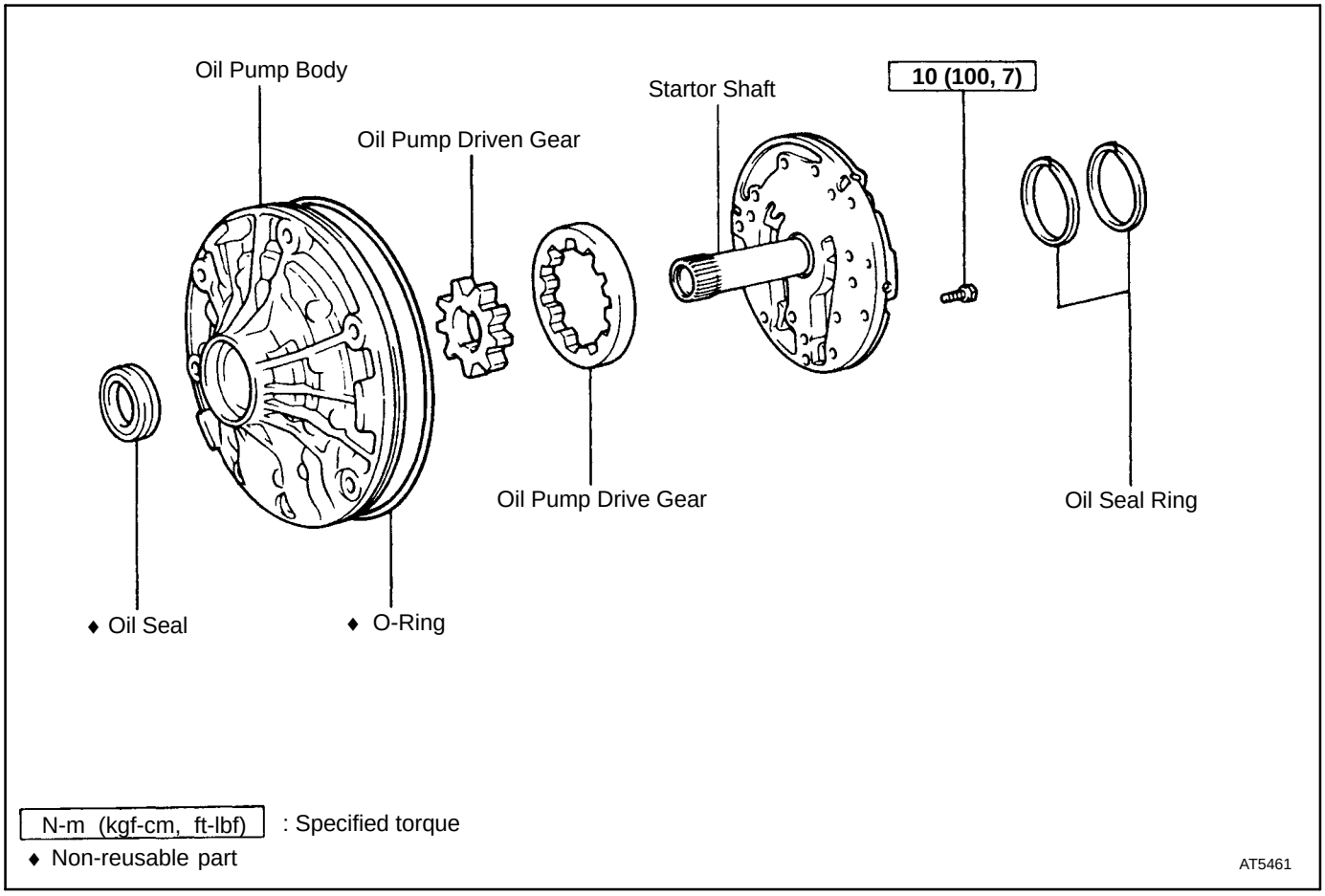

The procedures are presented in a step-by-step format:

- **The illustration shows what to do and where to do it.**
- **The task heading tells what to do.**
- **The detailed text tells how to perform the task and gives other information such as specifications and warnings.**

Example:

Task heading: what to do

21. CHECK PISTON STROKE OF OVERDRIVE BRAKE

(a) Place SST and a dial indicator onto the overdrive brake piston as shown in the illustration.

SST 09350-30020 (09350-06120)

Set part No. *Component part No.*

Detail text: how to do task

(b) Measure the stroke applying and releasing the compressed air (392 - 785 kPa, 4 - 8 kgf/cm^2 or 57 - 114 psi) as shown in the illustration.

Piston stroke: 1.40 - 1.70 mm (0.0551 - 0.0669 in.)

Specification

This format provides the experienced technician with a FAST TRACK to the information needed. The upper case task heading can be read at a glance when necessary, and the text below it provides detailed information. Important specifications and warnings always stand out in bold type.

REFERENCES

References have been kept to a minimum. However, when they are required you are given the page to refer to.

SPECIFICATIONS

Specifications are presented in bold type throughout the text where needed. You never have to leave the procedure to look up your specifications. They are also found at the back of AT section, for quick reference.

CAUTIONS, NOTICES, HINTS:

- CAUTIONS are presented in bold type, and indicate there is a possibility of injury to you or other people.
- NOTICES are also presented in bold type, and indicate the possibility of damage to the components being repaired.
- HINTS are separated from the text but do not appear in bold. They provide additional information to help you perform the repair efficiently.

SI UNIT

The UNITS given in this manual are primarily expressed according to with the SI UNIT (International System of Unit), and alternately expressed in the metric system and in the English System.
Example:
Torque: 30 N-m (310 kgf-cm, 22 ft-lbf)

GENERAL REPAIR INSTRUCTIONS

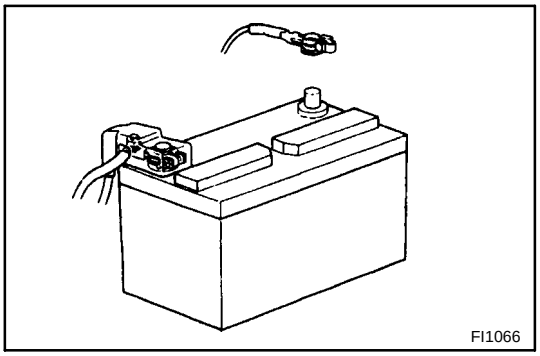
FI1066

1. **Use fender, seat and floor covers to keep the vehicle clean and prevent damage.**
2. **During disassembly, keep parts in the appropriate order to facilitate reassembly.**
3. **Observe the following:**
   (a) Before performing electrical work, disconnect the negative cable from the battery terminal.
   (b) If it is necessary to disconnect the battery for inspection or repair, always disconnect the cable from the negative (-)terminal which is grounded to the vehicle body.
   (c) To prevent damage to the battery terminal post, loosen the terminal nut and raise the cable straight up without twisting or prying it.
   (d) Clean the battery terminal posts and cable terminals with a clean shop rag. Do not scrape them with a file or other abrasive objects.
   (e) Install the cable terminal to the battery post with the nut loose, and tighten the nut after installation. Do not use a hammer to tap the terminal onto the post.
   (f) Be sure the cover for the positive (+) terminal is properly in place.
4. **Check hose and wiring connectors to make sure that they are secure and correct.**
5. **Non-reusable parts**
   (a) Always replace cotter pins, gaskets, O-rings and oil seals etc. with new ones.
   (b) Non-reusable parts are indicated in the component illustrations by the "♦ " symbol.

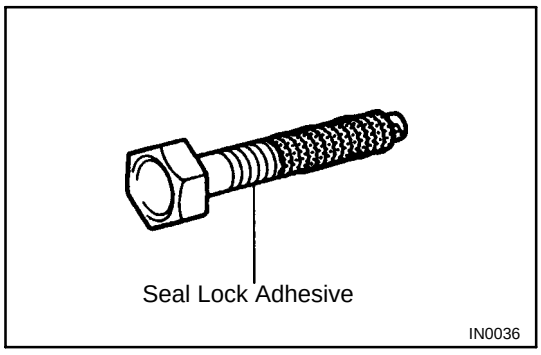

IN0036

6. **Precoated parts**
   Precoated parts are bolts and nuts, etc. that are coated with a seal lock adhesive at the factory.
   (a) If a precoated part is retightened, loosened or caused to move in any way, it must be recoated with the specified adhesive.

(b) When reusing precoated parts, clean off the old adhesive and dry with compressed air. Then apply the specified seal lock adhesive to the bolt, nut or threads.

(c) Precoated parts are indicated in the component illustrations by the "★" symbol.

7. When necessary, use a sealer on gaskets to prevent leaks.

8. Carefully observe all specifications for bolt tightening torques. Always use a torque wrench.

9. Use of special service tools (SST) and special service materials (SSM) may be required, depending on the nature of the repair. Be sure to use SST and SSM where specified and follow the proper work procedure. A list of SST and SSM can be found at the preparation of AT section.

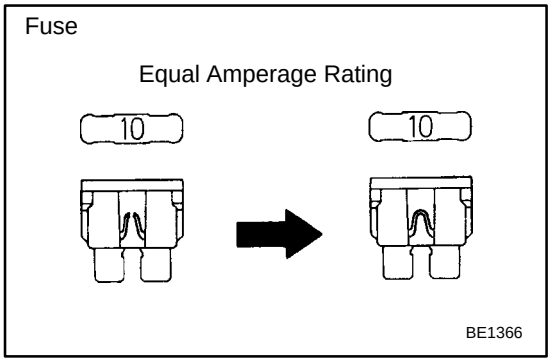

10. When replacing fuses, be sure the new fuse has the correct amperage rating. DO NOT exceed the rating or use one with a lower rating.

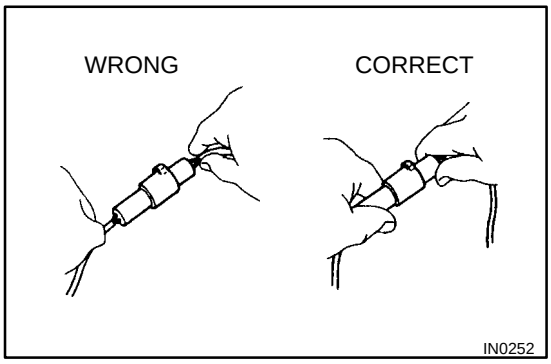

11. To pull apart electrical connectors, pull on the connector itself, not the wires.

12. Care must be taken when jacking up and supporting the vehicle. Be sure to lift and support the vehicle at the proper locations.

(a) If the vehicle is to be jacked up only at the front or rear end, be sure to block the wheels at the opposite end in order to ensure safety.

(b) After the vehicle is jacked up, be sure to support it on stands. It is extremely dangerous to do any work on a vehicle raised on a jack alone, even for a small job that can be finished quickly.

GLOSSARY OF SAE AND LEXUS TERMS

This glossary lists all SAE-J1930 terms and abbreviations used in this manual in compliance with SAE recommendations, as well as their Lexus equivalents.

SAE ABBRE-VIATIONS	SAE TERMS	LEXUS TERMS ( )- -ABBREVIATIONS
A/C	Air Conditioning	Air Conditioner
ACL	Air Cleaner	Air Cleaner
AIR	Secondary Air Injection	Air Injection (AI)
AP	Accelerator Pedal	—
B+	Battery Positive Voltage	+ B, Battery Voltage
BARO	Barometric Pressure	—
CAC	Charge Air Cooler	Intercooler
CARB	Carburetor	Carburetor
CFI	Continuous Fuel Injection	—
CKP	Crankshaft Position	Crank Angle
CL	Closed Loop	Closed Loop
CMP	Camshaft Position	Cam Angle
CPP	Clutch Pedal Position	—
CTOX	Continuous Trap Oxidizer	—
CTP	Closed Throttle Position	—
DFI	Direct Fuel Injection (Diesel)	Direct Injection (DI)
DI	Distributor Ignition	—
DLC1 DLC2 DLC3	Data Link Connector 1 Data Link Connector 2 Data Link Connector 3	1: Check Connector 2: Total Diagnosis Communication Link (TDCL) 3: OBD II Diagnostic Connector
DTC	Diagnostic Trouble Code	Diagnostic Code
DTM	Diagnostic Test Mode	—
ECL	Engine Control Level	—
ECM	Engine Control Module	Engine ECU (Electronic Control Unit)
ECT	Engine Coolant Temperature	Coolant Temperature, Water Temperature (THW)
EEPROM	Electrically Erasable Programmable Read Only Memory	Electrically Erasable Programmable Read Only Memory (EEPROM), Erasable Programmable Read Only Memory (EPROM)
EFE	Early Fuel Evaporation	Cold Mixture Heater (CMH), Heat Control Valve (HCV)
EGR	Exhaust Gas Recirculation	Exhaust Gas Recirculation (EGR)
EI	Electronic Ignition	Distributorless Ignition (DI)
EM	Engine Modification	Engine Modification (EM)
EPROM	Erasable Programmable Read Only Memory	Programmable Read Only Memory (PROM)
EVAP	Evaporative Emission	Evaporative Emission Control (EVAP)
FC	Fan Control	—
FEEPROM	Flash Electrically Erasable Programmable Read Only Memory	—
FEPROM	Flash Erasable Programmable Read Only Memory	—
FF	Flexible Fuel	—
FP	Fuel Pump	Fuel Pump
GEN	Generator	Alternator
GND	Ground	Ground (GND)
HO2S	Heated Oxygen Sensor	Heated Oxygen Sensor (HO2S)

IAC	Idle Air Control	Idle Speed Control (ISC)
IAT	Intake Air Temperature	Intake or Inlet Air Temperature
ICM	Ignition Control Module	—
IFI	Indirect Fuel Injection	Indirect Injection
IFS	Inertia Fuel-Shutoff	—
ISC	Idle Speed Control	—
KS	Knock Sensor	Knock Sensor
MAF	Mass Air Flow	Air Flow Meter
MAP	Manifold Absolute Pressure	Manifold Pressure Intake Vacuum
MC	Mixture Control	Electric Bleed Air Control Valve (EBCV) Mixture Control Valve (MCV) Electric Air Control Valve (EACV)
MDP	Manifold Differential Pressure	—
MFI	Multiport Fuel Injection	Electronic Fuel Injection (EFI)
MIL	Malfunction Indicator Lamp	Check Engine Light
MST	Manifold Surface Temperature	—
MVZ	Manifold Vacuum Zone	—
NVRAM	Non-Volatile Random Access Memory	—
O2S	Oxygen Sensor	Oxygen Sensor, O_2 Sensor (O_2S)
OBD	On-Board Diagnostic	On-Board Diagnostic (OBD)
OC	Oxidation Catalytic Converter	Oxidation Catalyst Converter (OC), CCo
OP	Open Loop	Open Loop
PAIR	Pulsed Secondary Air Injection	Air Suction (AS)
PCM	Powertrain Control Module	—
PNP	Park/Neutral Position	—
PROM	Programmable Read Only Memory	—
PSP	Power Steering Pressure	—
PTOX	Periodic Trap Oxidizer	Diesel Particulate Filter (DPF) Diesel Particulate Trap (DPT)
RAM	Random Access Memory	Random Access Memory (RAM)
RM	Relay Module	—
ROM	Read Only Memory	Read Only Memory (ROM)
RPM	Engine Speed	Engine Speed
SC	Supercharger	Supercharger
SCB	Supercharger Bypass	—
SFI	Sequential Multiport Fuel Injection	Electronic Fuel Injection (EFI), Sequential Injection
SPL	Smoke Puff Limiter	—
SRI	Service Reminder Indicator	—
SRT	System Readiness Test	—
ST	Scan Tool	—
TB	Throttle Body	Throttle Body
TBI	Throttle Body Fuel Injection	Single Point Injection Central Fuel Injection (Ci)
TC	Turbocharger	Turbocharger
TCC	Torque Converter Clutch	Torque Converter
TCM	Transmission Control Module	Transmission ECU (Electronic Control Unit)
TP	Throttle Position	Throttle Position
TR	Transmission Range	—

TVV	Thermal Vacuum Valve	Bimetallic Vacuum Switching Valve (BVSV) Thermostatic Vacuum Switching Valve (TVSV)
TWC	Three-Way Catalytic Converter	Three-Way Catalyst (TWC) CC_{RO}
TWC + OC	Three-Way + Oxidation Catalytic Converter	$CC_R + CC_0$
VAF	Volume Air Flow	Air Flow Meter
VR	Voltage Regulator	Voltage Regulator
VSS	Vehicle Speed Sensor	Vehicle Speed Sensor (Read Switch Type)
WOT	Wide Open Throttle	Full Throttle
WU-OC	Warm Up Oxidation Catalytic Converter	—
WU-TWC	Warm Up Three-Way Catalytic Converter	Manifold Converter
3GR	Third Gear	—
4GR	Fourth Gear	—

ABBREVIATIONS USED IN THIS MANUAL

A/T ATM	Automatic Transmission
ATF	Automatic Transmission Fluid
B_0	Overdrive Brake
B_1	Second Coast Brake
B_2	Second Brake
B_3	First and Reverse Brake
C_0	Overdrive Direct Clutch
C_1	Forward Clutch
C_2	Direct Clutch
D	Disc
F	Flange
F_0	Overdrive One-way Clutch
F_1	No. 1 One-way Clutch
F_2	No. 2 One-way Clutch
FIPG	Formed in Place Gasket
MP	Multipurpose
O/D	Overdrive
P	Plate
SSM	Special Service Materials
SST	Special Service Tools
w/	with
w/o	without

PREPARATION

SST (SPECIAL SERVICE TOOLS)

	09032 - 00100	Oil Pan Seal Cutter	
	09240 - 00020	Wire Gauge Set	
	09350 - 30020	TOYOTA Automatic Transmission Tool Set	
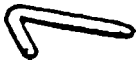	(09350 - 06120)	No. 2 Measure Terminal	
	(09350 - 07020)	Oil Pump Puller	
	(09350 - 07030)	No. 1 Piston Spring Compressor	
	(09350 - 07040)	No. 2 Piston Spring Compressor	
	(09350 - 07050)	No. 3 Piston Spring Compressor	
	(09350 - 07060)	No. 1 Snap Ring Expander	
	(09350 - 07070)	No. 2 Snap Ring Expander	
	(09350 - 07080)	Brake Reaction Sleeve Puller	
	(09350 - 07090)	Brake No. 1 Piston Puller	
	(09350 - 07110)	Oil Seal Replacer	

	09350 - 36010	TOYOTA Automatic Transmission Tool Set	
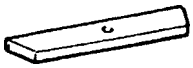	(09350 - 06090)	Plate	
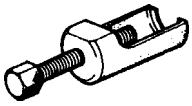	09610 - 20012	Pitman Arm Puller	Remove oil pump.

RECOMMENDED TOOLS

	09031 - 00030	Pin Punch.	
	09905 - 00013	Snap Ring Pliers.	

EQUIPMENT

Feeler gauge	Check major clearance.
Vernier calipers	Check length of second coast brake piston rod.
Dial indicator or dial indicator with magnetic base	Check piston stroke and end play of the output shaft.
Straight edge	Check side clearance of oil pump.
Torque wrench	
Cylinder gauge	Check inside diameter of the transmission case rear bushing.

LUBRICANT

Item	Capacity	Classification
Dry fill	11.7 liters (12.4 US qts, 10.3 Imp. qts)	ATF DEXRON® II
Drain and refill	2.0 liters (2.1 US qts, 1.8 Imp. qts)	

SSM (SPECIAL SERVICE MATERIALS)

	08826 - 00090	Seal Packing 1281, THREE BOND 1281 or equivalent (FIPG)	Oil pan Transfer case

STANDARD BOLT TORQUE SPECIFICATIONS

HOW TO DETERMINE BOLT STRENGTH

	Mark	Class		Mark	Class
Hexagon head bolt	Bolt head No. 4- 5- 6- 7- 8- 9- 10- 11-	4T 5T 6T 7T 8T 9T 10T 11T	Hexagon flange bolt w/ washer hexagon bolt	4 Protruding lines	9T
			Hexagon flange bolt w/ washer hexagon bolt	5 Protruding lines	10T
	No mark	4T	Hexagon flange bolt w/ washer hexagon bolt	6 Protruding lines	11T
Hexagon flange bolt w/ washer hexagon bolt	No mark	4T	Stud bolt	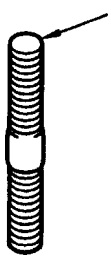 No mark	4T
Hexagon head bolt	2 Protruding lines	5T			
Hexagon flange bolt w/ washer hexagon bolt	2 Protruding lines	6T		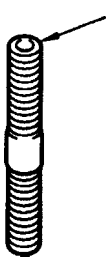 Grooved	6T
Hexagon head bolt	3 Protruding lines	7T	Welded bolt	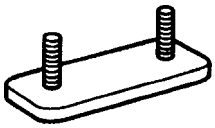	4T
Hexagon head bolt	4 Protruding lines	8T			

V06821

SPECIFIED TORQUE FOR STANDARD BOLTS

Class	Diameter mm	Pitch mm	Specified torque					
			Hexagon head bolt			Hexagon flange bolt		
			N-m	kgf-cm	ft-lbf	N-m	kgf-cm	ft-lbf
4T	6	1	5	55	48 in.-lbf	6	60	52 in.-lbf
	8	1.25	12.5	130	9	14	145	10
	10	1.25	26	260	19	29	290	21
	12	1.25	47	480	35	53	540	39
	14	1.5	74	760	55	84	850	61
	16	1.5	115	1,150	83	-	-	-
5T	6	1	6.5	65	56 in.-lbf	7.5	75	65 in.-lbf
	8	1.25	15.5	160	12	17.5	175	13
	10	1.25	32	330	24	36	360	26
	12	1.25	59	600	43	65	670	48
	14	1.5	91	930	67	100	1,050	76
	16	1.5	140	1,400	101	-	-	-
6T	6	1	8	80	69 in.-lbf	9	90	78 in.-lbf
	8	1.25	19	195	14	21	210	15
	10	1.25	39	400	29	44	440	32
	12	1.25	71	730	53	80	810	59
	14	1.5	110	1,100	80	125	1,250	90
	16	1.5	170	1,750	127	-	-	-
7T	6	1	10.5	110	8	12	120	9
	8	1.25	25	260	19	28	290	21
	10	1.25	52	530	38	58	590	43
	12	1.25	95	970	70	105	1,050	76
	14	1.5	145	1,500	108	165	1,700	123
	16	1.5	230	2,300	166	-	-	-
8T	8	1.25	29	300	22	33	330	24
	10	1.25	61	620	45	68	690	50
	12	1.25	110	1,100	80	120	1,250	90
9T	8	1.25	34	340	25	37	380	27
	10	1.25	70	710	51	78	790	57
	12	1.25	125	1,300	94	140	1,450	105
10T	8	1.25	38	390	28	42	430	31
	10	1.25	78	800	58	88	890	64
	12	1.25	140	1,450	105	155	1,600	116
11T	8	1.25	42	430	31	47	480	35
	10	1.25	87	890	64	97	990	72
	12	1.25	155	1,600	116	175	1,800	130

SERVICE SPECIFICATIONS

SERVICE DATE

Oil Pump

Body clearance	Standard	0.07 - 0.15 mm	0.0028 - 0.0059 in.
	Maximum	0.3 mm	0.012 in.
Tip clearance	Standard	0.11 - 0.14 mm	0.0043 - 0.0055 in.
	Maximum	0.3 mm	0.012 in.
Side clearance	Standard	0.02 - 0.05 mm	0.0008 - 0.0020 in.
	Maximum	0.1 mm	0.004 in.
Pump body bushing inside diameter	Maximum	38.19 mm	1.5035 in.
Stator shaft bushing inside diameter			
Front side	Maximum	21.58 mm	0.8496 in.
Rear side	Maximum	27.08 mm	1.0661 in.

O/D Direct Clutch

Clutch drum bushing inside diameter	Maximum	27.11 mm	1.0673 in.
O/D direct clutch piston stroke		1.85 - 2.15 mm	0.0728 - 0.0846 in.
O/D planetary gear bushing	Maximum	11.27 mm	0.4437 in.
Planetary pinion gear thrust clearance	Standard	0.20 - 0.60 mm	0.0079 - 0.0236 in.
	Maximum	1.00 mm	0.0394 in.
Flange thickness	No. 16	3.6 mm	0.142 in.
	No. 17	3.5 mm	0.138 in.
	No. 18	3.4 mm	0.134 in.
	No. 19	3.3 mm	0.130 in.
	No. 20	3.2 mm	0.126 in.
	No. 21	3.1 mm	0.122 in.

O/D Brake

Piston stroke		1.75 - 2.05 mm	0.0689 - 0.0807 in.
Flange thickness	No. 77	3.3 mm	0.130 in.
	No. 78	3.5 mm	0.138 in.
	No. 79	3.6 mm	0.142 in.
	No. 80	3.7 mm	0.146 in.
	No. 81	3.8 mm	0.150 in.
	No. 82	3.9 mm	0.154 in.
	None	4.0 mm	0.157 in.

Direct Clutch

Piston stroke		1.37 - 1.60 mm	0.0539 - 0.0630 in.
Drum bushing inside diameter		53.99 mm	2.1256 in.
Flange thickness	No. 33	3.0 mm	0.118 in.
	No. 32	3.1 mm	0.122 in.
	No. 31	3.2 mm	0.126 in.
	No. 30	3.3 mm	0.130 in.
	No. 29	3.4 mm	0.134 in.
	No. 28	3.5 mm	0.138 in.
	No. 27	3.6 mm	0.142 in.
	No. 34	3.7 mm	0.146 in.

Forward Clutch

Pack clearance		0.60 - 1.00 mm	0.0236 - 0.0394 in.
Drum bushing inside diameter		24.08 mm	0.9480
Flange thickness	No. 61	3.0 mm	0.118 in.
	No. 60	3.2 mm	0.126 in.
	No. 45	3.4 mm	0.134 in.
	No. 62	3.6 mm	0.142 in.
	No. 44	3.8 mm	0.150 in.
	No. 42	4.0 mm	0.157 in.
	No. 63	4.2 mm	0.165 in.
	No. 64	4.4 mm	0.173 in.

2nd Coast Brake

Piston stroke		1.5 - 3.0 mm	0.059 - 0.118 in.
Piston rod length		72.9 mm	2.870 in.
		71.4 mm	2.811 in.

Front Planetary Gear

Maximum inside diameter		24.08 mm	0.9480 in.
Planetary pinion gear thrust clearance	Standard	0.20 - 0.60 mm	0.0079 - 0.0236 in.
	Maximum	1.00 mm	0.0394 in.

Planetary Sun Gear

Sun gear bushing inside diameter	Maximum	27.08 mm	1.0661 in.

2nd Brake

Pack clearance		0.62 - 1.98 mm	0.0244 - 0.0780 in.

1st and Reverse Brake

Pack clearance		0.70 - 1.22 mm	0.0276 - 0.0480 in.
Flange thickness	No. 50	5.0 mm	0.197 in.
	No. 51	4.8 mm	0.189 in.
	No. 52	4.6 mm	0.181 in.
	No. 53	4.4 mm	0.173 in.
	No. 54	4.2 mm	0.165 in.
	No. 55	4.0 mm	0.157 in.

Rear Planetary Gear

Planetary pinion gear thrust clearance	Standard	0.20 - 0.60 mm	0.0079 - 0.0236 in.
	Maximum	1.00 mm	0.0394 in.

Valve Body Spring

Spring	Free length and Coil outer diameter mm (in.)		Color
Upper valve body			
Secondary regulator valve	29.9 (1.177)	11.2 (0.441)	Green
Lock-up relay valve	21.4 (0.843)	5.5 (0.217)	Light Gray
3 - 4 shift valve	30.8 (1.213)	9.7 (0.382)	Purple
Down shift plug	27.3 (1.075)	8.7 (0.343)	Yellow
Throttle valve	20.6 (0.811) or 23.3 (0.917)	9.2 (0.362) 9.2 (0.362)	Blue White
2nd coast modulator valve	30.9 (1.217)	8.3 (0.327)	Purple
Cut-back valve	21.8 (0.858)	6.0 (0.236)	Red
2 - 3 shift valve	30.8 (1.213)	9.7 (0.382)	Blue
Low coast modulator valve	30.4 (1.197)	8.3 (0.327)	Light Green
Lower valve body			
Check valve	20.2 (0.796)	12.1 (0.476)	None
Pressure relief valve	11.2 (0.441)	6.4 (0.252)	None
1 - 2 shift valve	30.8 (1.213)	9.7 (0.382)	Purple
Primary regulator valve	62.3 (2.453)	18.6 (0.732)	Purple
Accumulator control valve	33.9 (1.335)	8.8 (0.346)	Pink

Valve Body Key

Key	Height mm (in.)	Width mm (in.)	Thickness mm (in.)
Upper valve body			
Low coast modulator valve	14.5 (0.571)	5.0 (0.197)	3.2 (0.126)
2 - 3 shift valve	14.0 (0.551)	5.0 (0.197)	3.2 (0.126)
Cut-back valve	15.0 (0.591)	5.0 (0.197)	3.2 (0.126)
Secondary regulator valve	14.0 (0.551)	5.0 (0.197)	3.2 (0.126)
Lock-up relay valve	21.2 (0.835)	5.0 (0.197)	3.2 (0.126)
3 - 4 shift valve	16.5 (0.650)	5.0 (0.197)	3.2 (0.126)
2nd coast modulator valve	16.5 (0.650)	5.0 (0.197)	3.2 (0.126)
Lower valve body			
Accumulator control valve	21.2 (0.835)	5.0 (0.197)	3.2 (0.126)
1 - 2 shift valve	16.5 (0.650)	6.0 (0.236)	3.2 (0.126)
Primary regulator valve	16.2 (0.638)	5.0 (0.197)	3.2 (0.126)

Transmission Case

Transmission case bushing	Maximum	38.19 mm	1.5035 in.

Output Shaft

Thrust play	0.27 - 0.86 mm	0.0106 - 0.0339 in.

Accumulator Spring

Spring		Free length mm (in.)	Color
B_2		72.6 (2.858)	Light Gray
C_2	Inner	42.1 (1.657)	Pink
C_2	Outer	73.3 (2.886)	White & Red
B_0		62.0 (2.441)	Green
C_0	Inner	46.0 (1.811)	Yellow
C_0	Outer	74.6 (2.937)	Orange

TORQUE SPECIFICATION

Part tightened		N-m	kgf-cm	ft-lbf
Stator shaft × Oil pump body		10	100	7
Upper valve body × Lower valve body		6.4	65	56 in.-lbf
Detent spring × Valve body		10	100	7
Parking lock pawl bracket		7.4	75	65 in.-lbf
O/D support × Transmission case		25	260	19
Oil pump × Transmission case		22	220	16
Valve body × Transmission case		10	100	7
Oil strainer × Valve body		10	100	7
Solenoid × Valve body		10	100	7
Oil pan × Transmission case		7.4	75	65 in.-lbf
Transmission housing	10 mm bolt	34	345	25
	12 mm bolt	57	580	42
Union		29	300	22
Vehicle speed sensor		16	160	12
Park/Neutral position switch		6.9	70	61 in.-lbf
Park/Neutral position switch adjusting bolt		13	130	9
Control shaft lever		16	160	12
Transmission case × Transfer adaptor		34	345	25
Transfer adaptor × Transfer		36	370	27
Dynamic damper		37	380	27
Drain plug		20	205	15
Plug		29	300	22
Dust cover × Bracket		23	230	17
Engine rear mounting × Transfer case		25	260	19

OPERATION

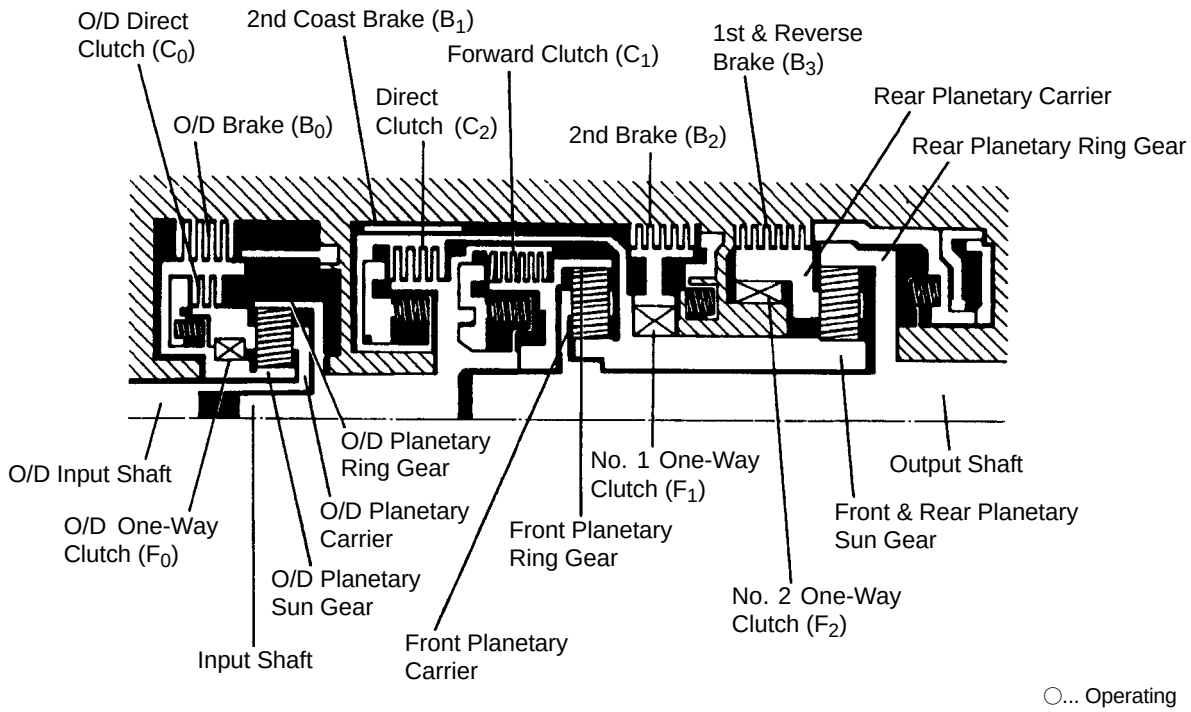

AT2157

○... Operating

Shift lever position	Gear position	C_0	C_1	C_2	B_0	B_1	B_2	B_3	F_0	F_1	F_2
P	Parking	○									
R	Reverse	○		○				○	○		
N	Neutral	○									
D	1st	○	○						○		○
	2nd	○	○				○		○	○	
	3rd	○	○	○			○		○		
	O/D		○	○	○		○				
2	1st	○	○						○		○
	2nd	○	○			○	○		○	○	
	*1 3rd	○	○	○			○		○		
L	1st	○	○					○	○		○
	*2 2nd	○	○			○	○		○	○	

*1 Down-shift only in the 2 position and 3rd gear-no up-shift.
*2 Down-shift only in the L position and 2nd gear-no up-shift.

V07130

COMPONENT PARTS REMOVAL

COMPONENTS

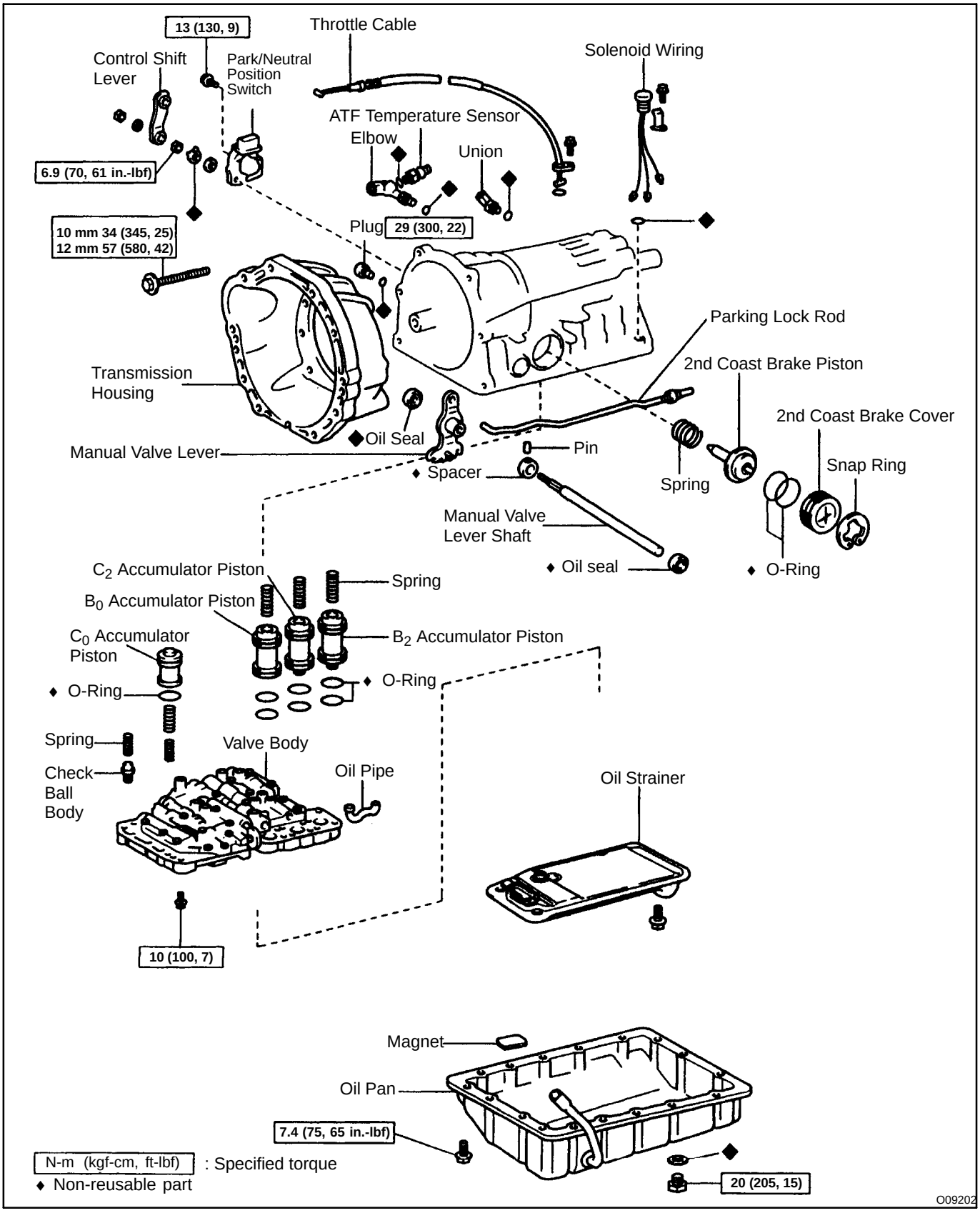

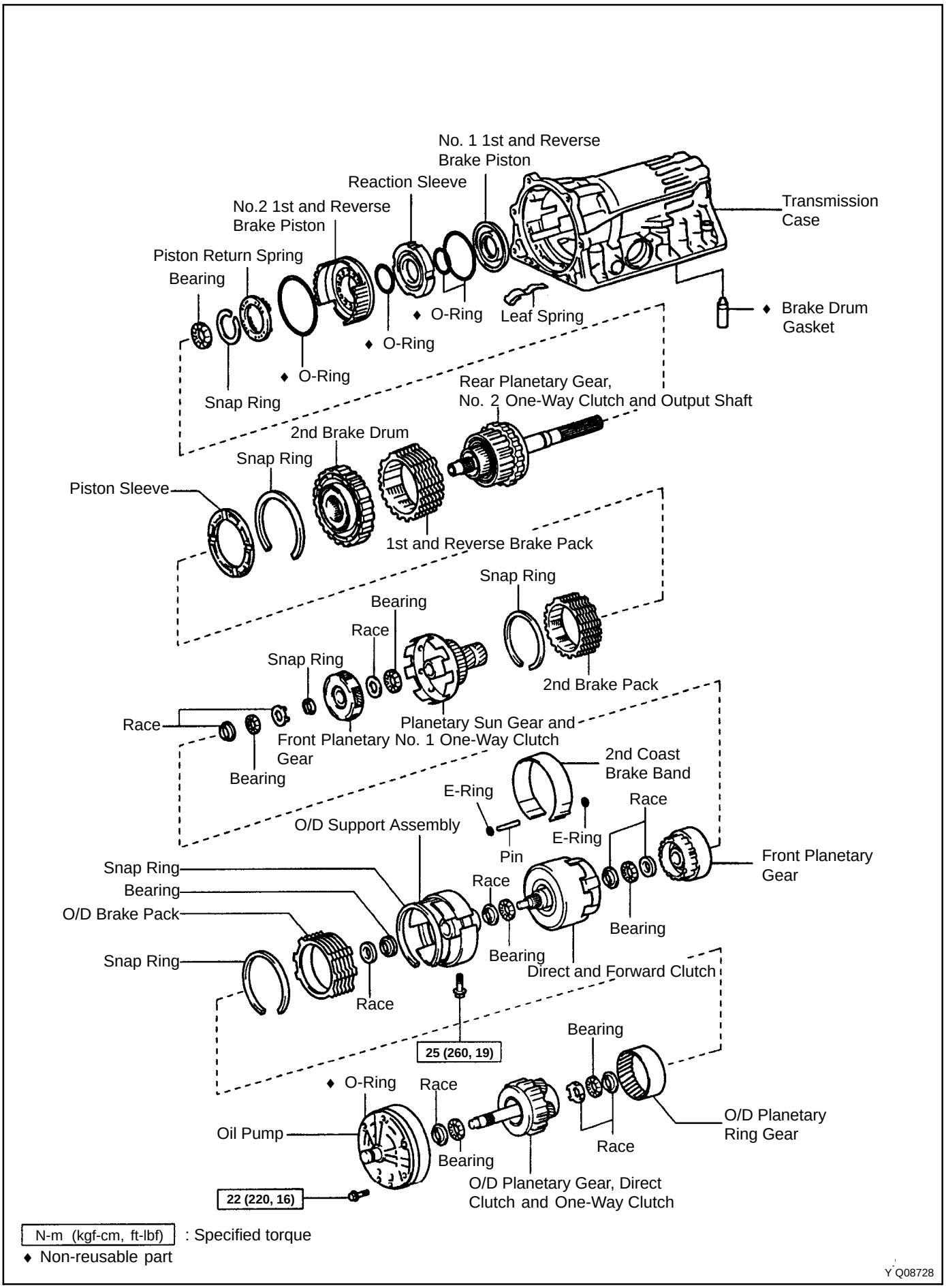
No. 1 1st and Reverse Brake Piston
Reaction Sleeve
No.2 1st and Reverse Brake Piston
Piston Return Spring
Bearing
Transmission Case
♦ O-Ring
Leaf Spring
♦ Brake Drum Gasket
♦ O-Ring
♦ O-Ring
Snap Ring
Rear Planetary Gear, No. 2 One-Way Clutch and Output Shaft
2nd Brake Drum
Snap Ring
Piston Sleeve
1st and Reverse Brake Pack
Snap Ring
Bearing
Race
Snap Ring
2nd Brake Pack
Race
Planetary Sun Gear and Front Planetary No. 1 One-Way Clutch Gear
Bearing
2nd Coast Brake Band
E-Ring
Race
O/D Support Assembly
E-Ring
Pin
Front Planetary Gear
Snap Ring
Race
Bearing
O/D Brake Pack
Bearing
Snap Ring
Bearing
Direct and Forward Clutch
Race
Bearing
25 (260, 19)
♦ O-Ring
Race
O/D Planetary Ring Gear
Oil Pump
Race
Bearing
O/D Planetary Gear, Direct Clutch and One-Way Clutch
22 (220, 16)
N-m (kgf-cm, ft-lbf) : Specified torque
♦ Non-reusable part
Y Q08728

TRANSMISSION DISASSEMBLY

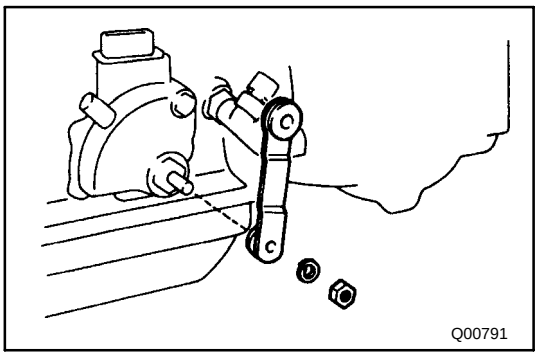

1. REMOVE TRANSMISSION CONTROL SHAFT LEVER

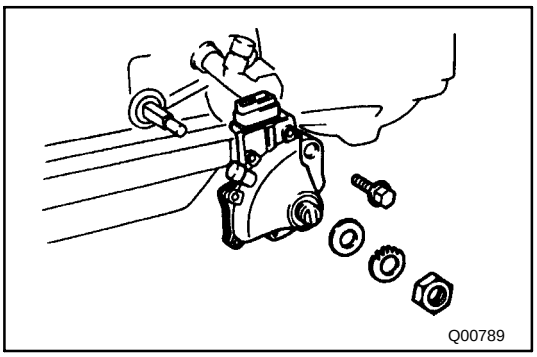

2. REMOVE PARK/NEUTRAL POSITION SWITCH

(a) Unstake the lock washer.

(b) Remove the nut and bolt, and then remove the park/ neutral position switch.

(c) Remove the lock washer and grommet.

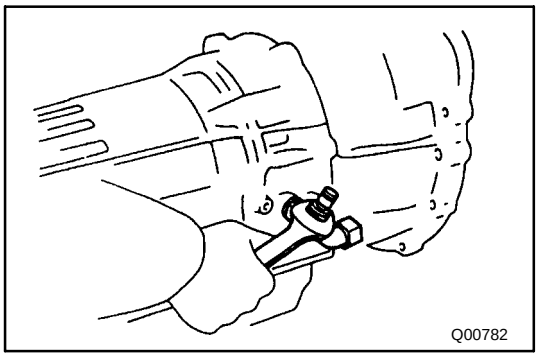

3. REMOVE ATF TEMPERATURE SENSOR

(a) Remove the temperature sensor.

(b) Remove the O-ring from the sensor.

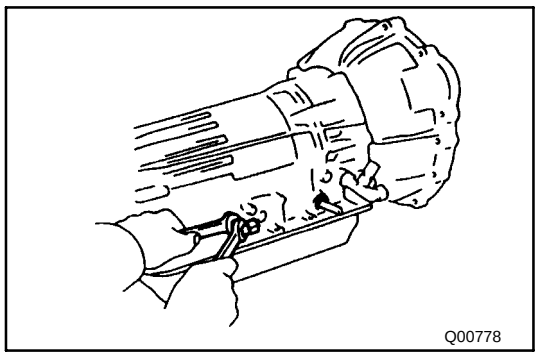

4. REMOVE TRANSMISSION SIDE UNION AND ELBOW

(a) Remove the union and elbow.

(b) Remove the O-rings from the union and elbow.

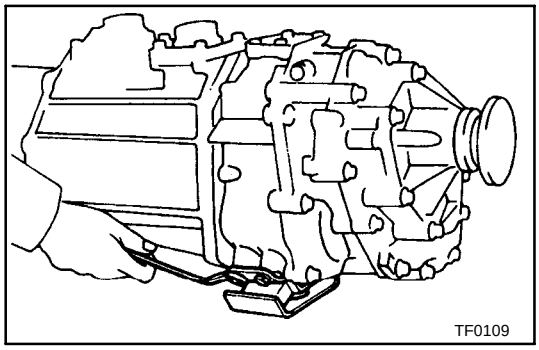

5. REMOVE ENGINE REAR MOUNTING

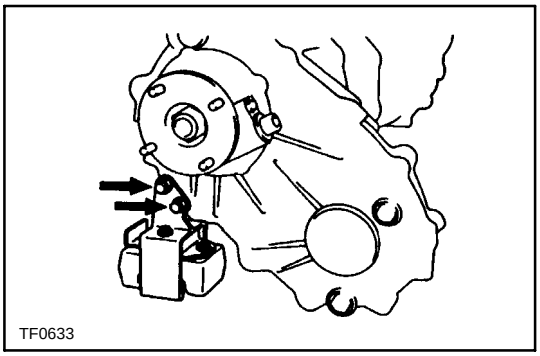

6. REMOVE DYNAMIC DAMPER

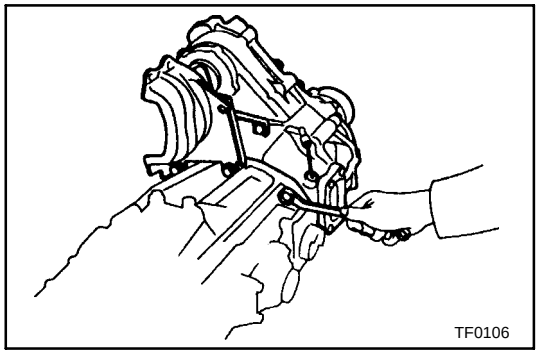

7. REMOVE PROPELLER SHAFT UPPER DUST COVER AND TRANSFER FROM TRANSMISSION

(a) Remove the dust cover bolt from the bracket.

(b) Remove the transfer adaptor rear mounting bolts.

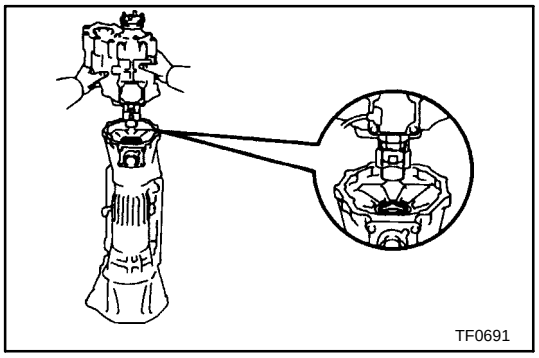

(c) Pull the transfer straight up and remove it from the transmission.

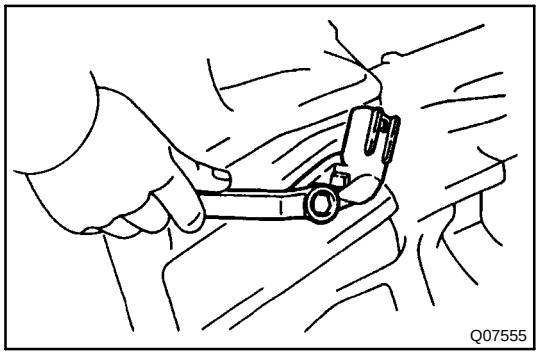

8. REMOVE VEHICLE SPEED SENSOR

(a) Remove the vehicle speed sensor and stopper plate.

(b) Remove the O-ring from sensor.

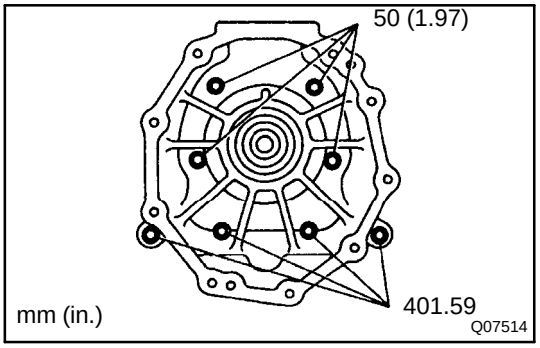

9. REMOVE TRANSFER CASE

Remove the 8 bolts and the case.

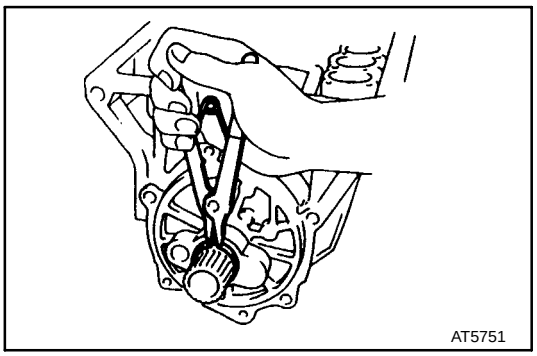

10. REMOVE SPEED SENSOR ROTOR AND KEY

(a) Using a snap ring expander, remove the snap ring.

(b) Remove the sensor rotor and key.

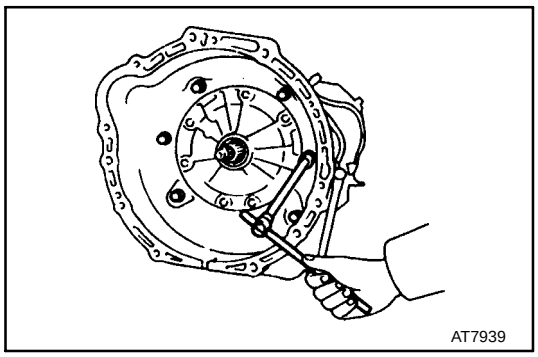

11. REMOVE TRANSMISSION HOUSING

(a) Remove the 6 bolts.

(b) Remove the transmission housing.

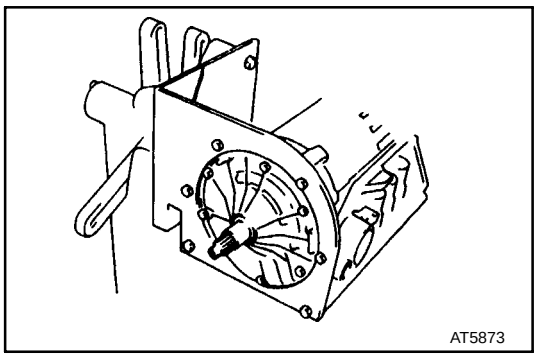

12. INSTALL TRANSMISSION CASE

Install the transmission case on the overhaul attachment.

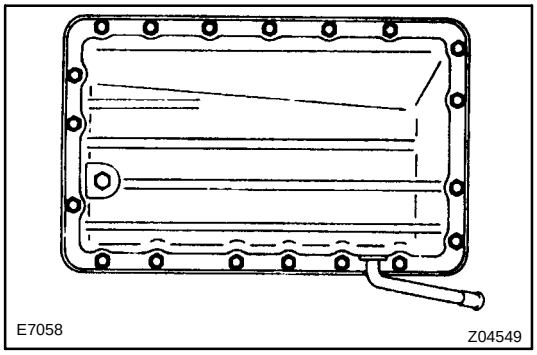

13. REMOVE OIL PAN

NOTICE: Do not turn the transmission over as this will contaminate the valve body with any foreign matter at the bottom on the pan.

(a) Remove the 19 bolts.

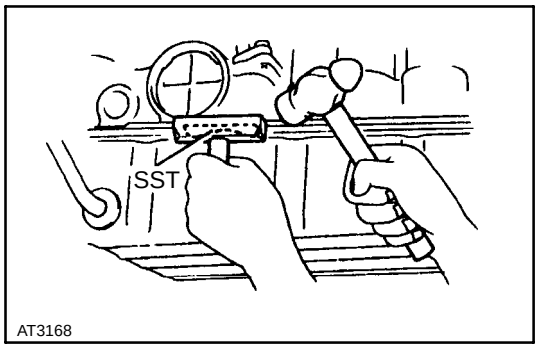

(b) Install the blade of SST between the transmission case and oil pan, cut off applied sealer.

SST 09032-00100

NOTICE: Be careful not to damage the oil pan flange.

(c) Remove the pan by lifting the transmission case.

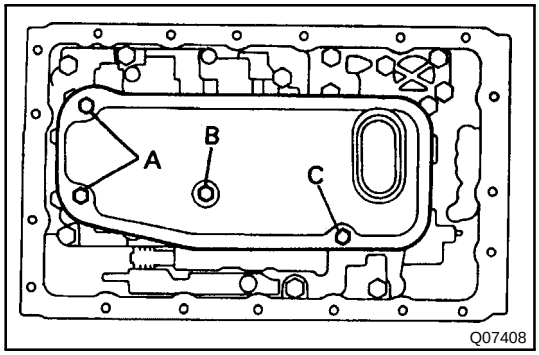

14. REMOVE OIL STRAINER AND GASKETS

Remove the 4 bolts and oil strainer case.

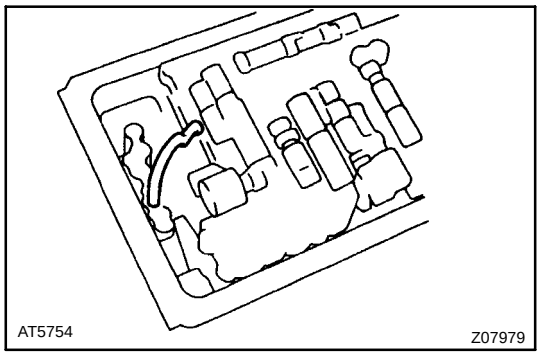

15. REMOVE OIL PIPE

Pry up the pipe ends with a large screwdriver and remove the pipe.

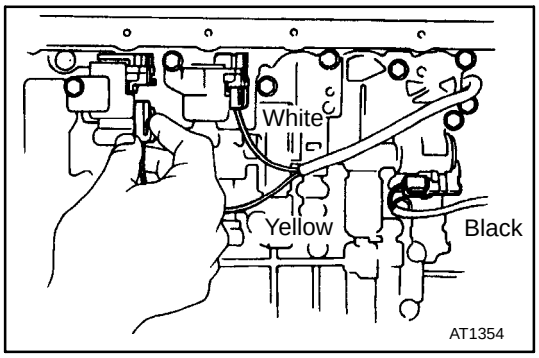

16. REMOVE SOLENOID WIRING

(a) Disconnect the 3 connectors from the shift solenoid valve No. 1, No. 2 and SL.

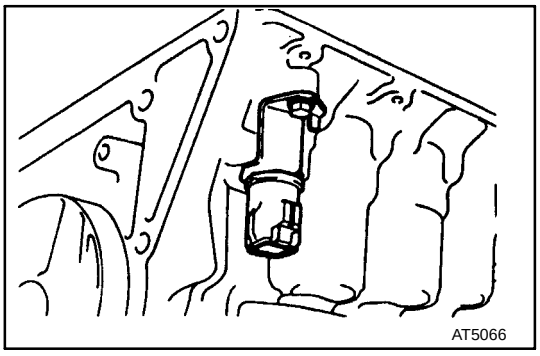

(b) Remove the stopper plate from the case.

(c) Pull out the solenoid wiring from the transmission case.

(d) Remove the O-ring from the grommet.

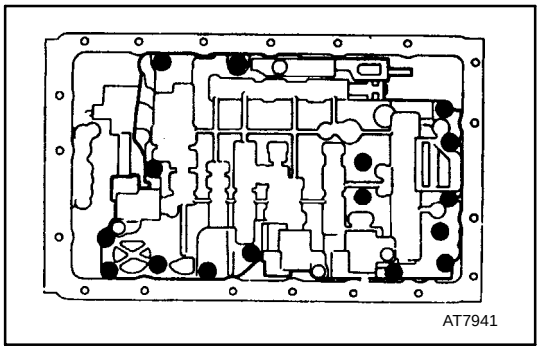

17. REMOVE VALVE BODY

(a) Remove the 16 bolts.

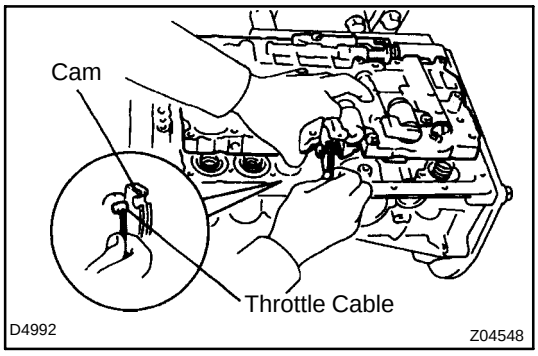

(b) Disconnect the throttle cable from the cam and remove the valve body.

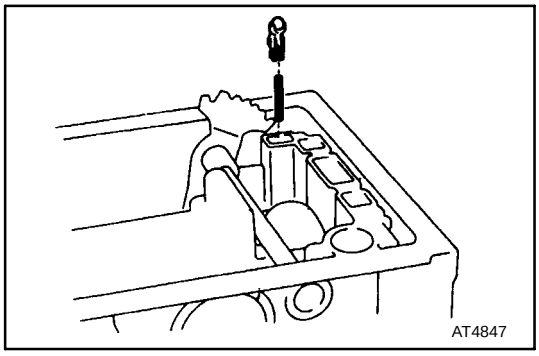

18. REMOVE CHECK BALL BODY

Remove the check ball body and spring.

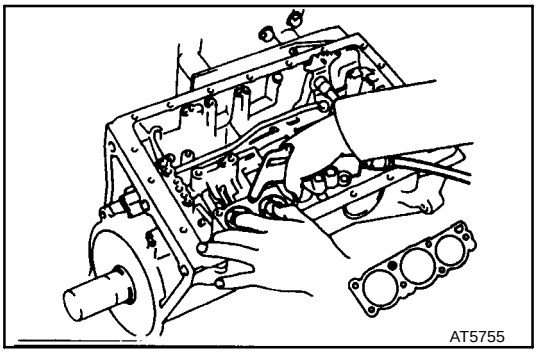

19. REMOVE ACCUMULATOR PISTONS AND SPRINGS

(a) Applying compressed air to the oil hole, remove the B_0 and C_0 accumulator pistons and 3 springs.

(b) Remove the O-ring from each piston.

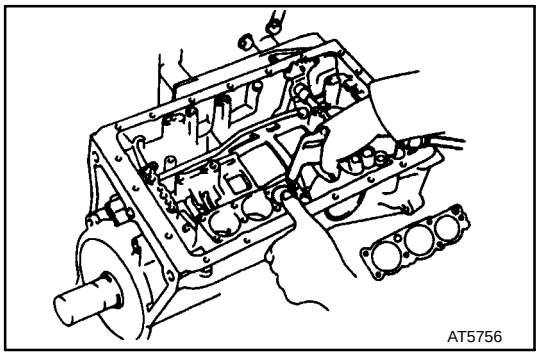

(c) Applying compressed air to the oil hole, remove the B_0 accumulator piston and spring.

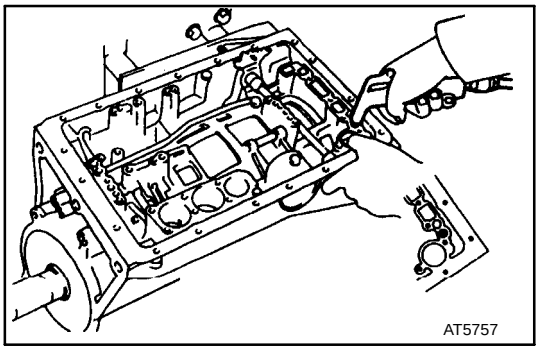

(d) Applying compressed air to the oil hole, remove the C_0 accumulator piston and spring.

(e) Remove the O-ring from the piston.

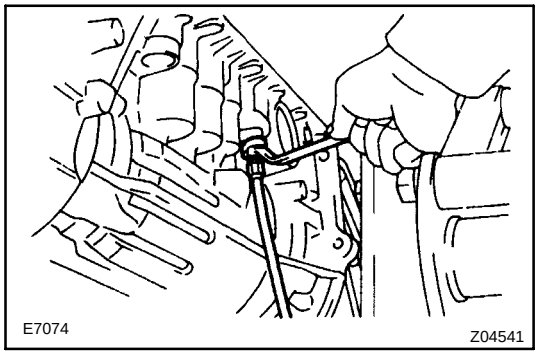

20. REMOVE THROTTLE CABLE

(a) Remove the retaining bolt and pull out the throttle cable.

(b) Remove the O-ring from the cable.

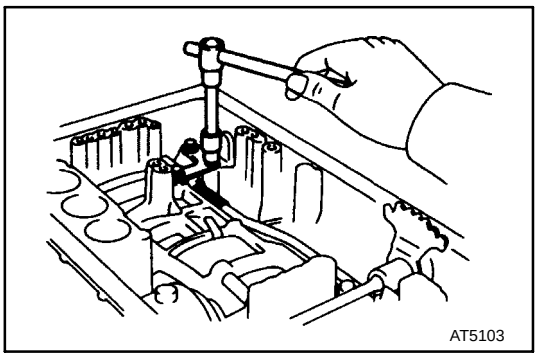

21. REMOVE PARKING LOCK ROD AND PAWL

(a) Remove the parking lock pawl bracket.

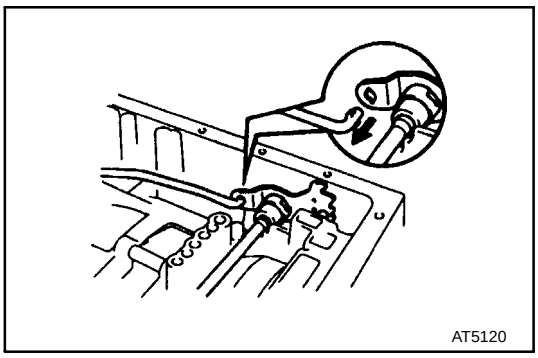

(b) Disconnect the parking lock rod from the manual valve lever.

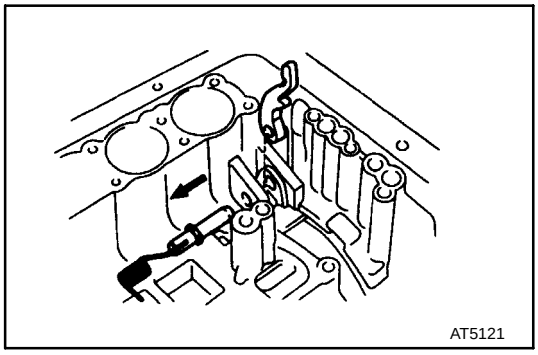

(c) Remove the E-ring from the shaft.

(d) Pull the parking lock pawl shaft out from the front side, then remove the pawl and spring.

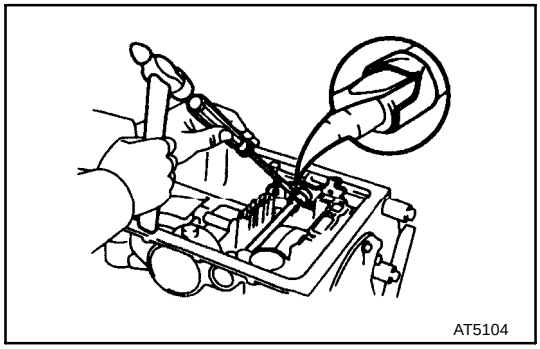

22. REMOVE MANUAL VALVE LEVER SHAFT

(a) Using a screwdriver and hammer, cut off the spacer and remove it from the shaft.

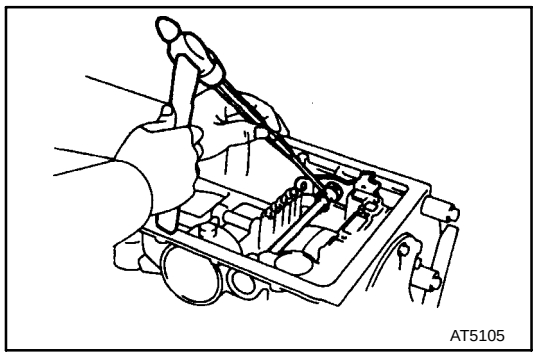

(b) Using a pin punch, drive out the spring pin.

HINT: Slowly drive out the spring pin so it does not fall into the transmission case.

(c) Pull the manual valve lever shaft out through the case and remove the manual valve lever.

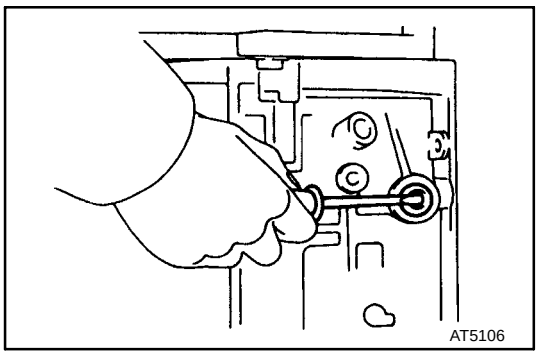

(d) Using a screwdriver, remove the 2 oil seals.

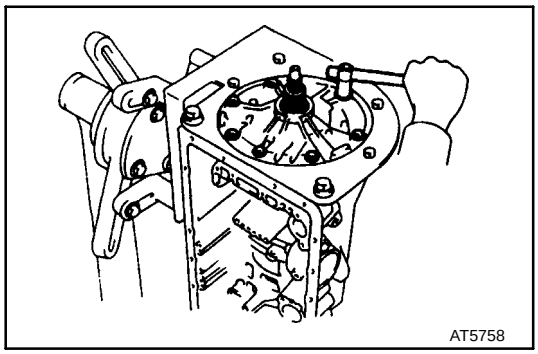

23. REMOVE OIL PUMP

(a) Stand up the transmission.

(b) Remove the 7 bolts holding the oil pump to the transmission case.

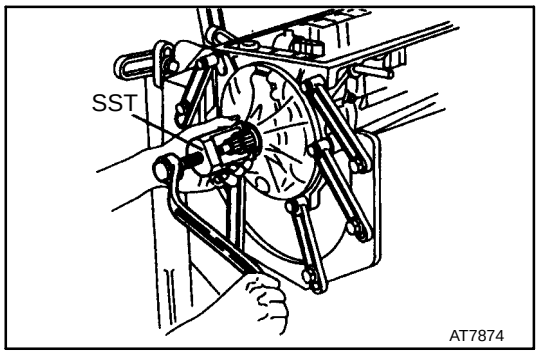

(c) Using SST, remove the oil pump.

SST 09610-20012

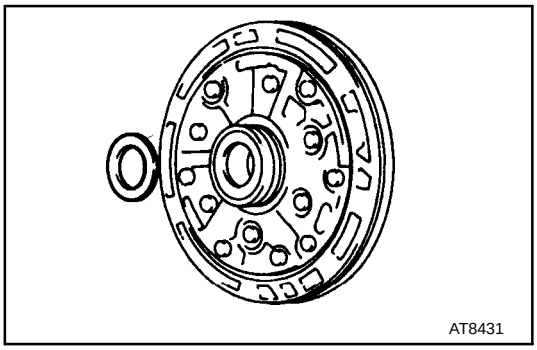

(d) Remove the race from the oil pump.

(e) Remove the O-ring from the oil pump.

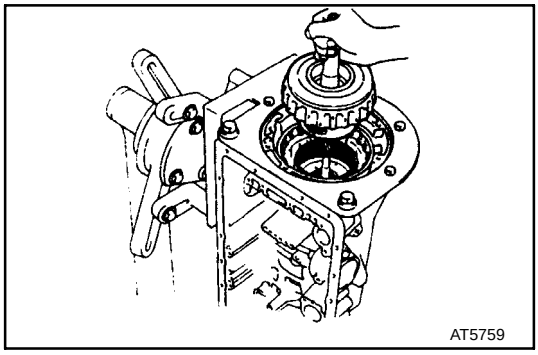

24. REMOVE O/D PLANETARY GEAR WITH O/D DIRECT CLUTCH AND ONE-WAY CLUTCH

(a) Remove the O/D planetary gear with the O/D direct clutch and one-way clutch from the transmission case.

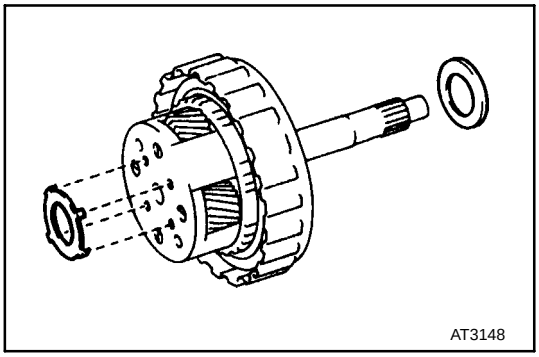

(b) Remove the race and assembled bearing and race.

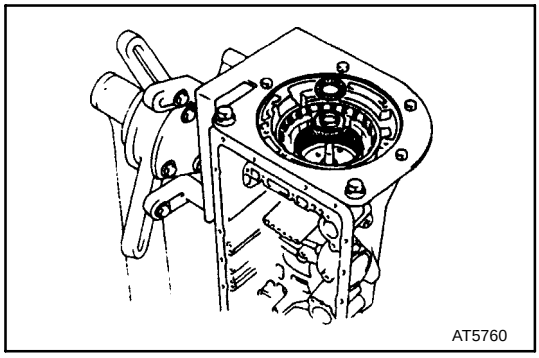

(c) Remove the bearing and race.

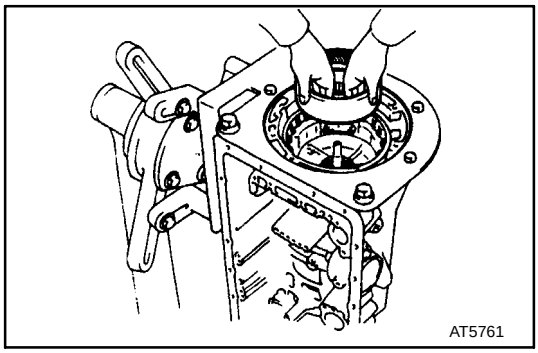

(d) Remove the O/D planetary ring gear from the transmission case.

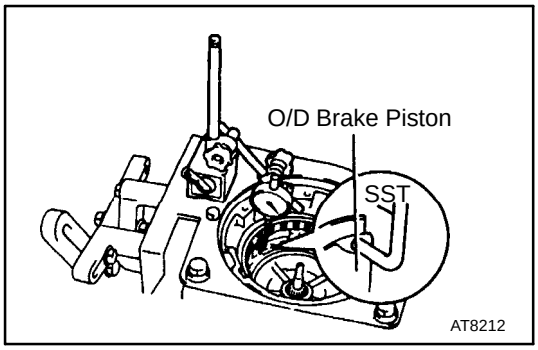

25. CHECK PISTON STROKE OF O/D BRAKE

(a) Place SST and a dial indicator onto the O/D brake piston.

SST 09350-30020 (09350-06120)

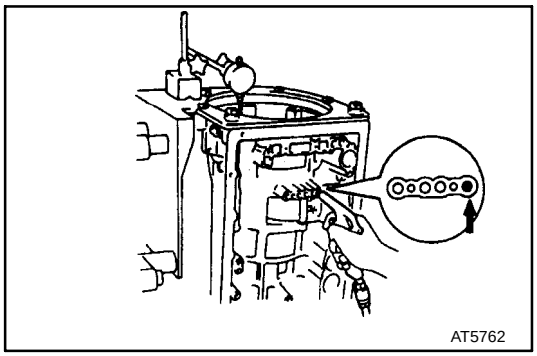

(b) Measure the stroke while applying and releasing compressed air (392 - 785 kPa, 4 - 8 kgf/cm^2, 57 - 114 psi).

Piston stroke:
1.75 - 2.05 mm (0.0689 - 0.0807 in.)

If the values are non-standard, inspect the disc.

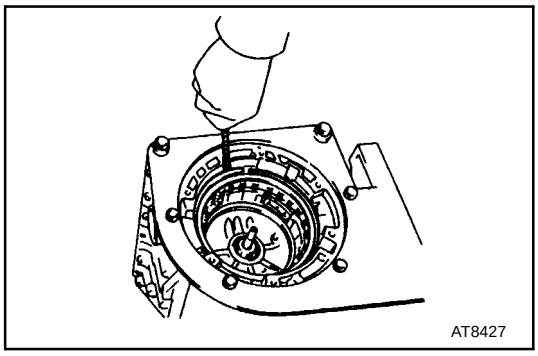

26. REMOVE FLANGES, PLATES AND DISCS OF O/D BRAKE

(a) Using a screwdriver, remove the snap ring.

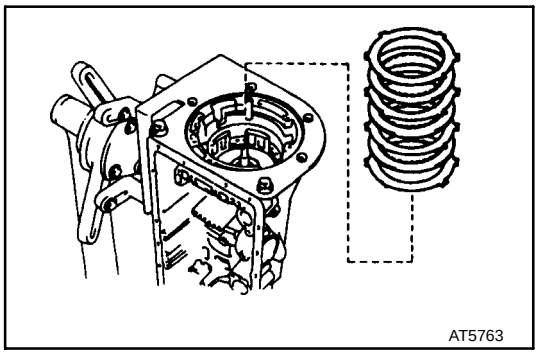

(b) Remove the flanges, plates and discs as a set.

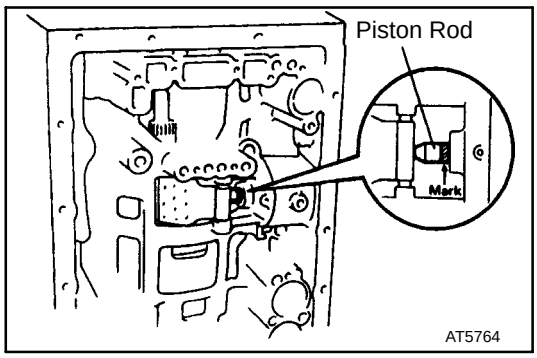

27. CHECK PISTON ROD STROKE OF 2ND COAST BRAKE

(a) Place a mark on the 2nd coast brake piston rod.

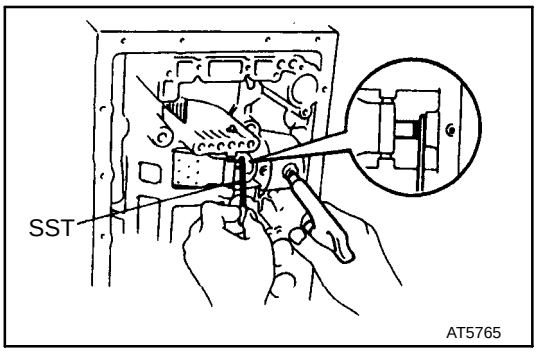

(b) Using SST, measure the stroke while applying compressed air (392 - 785 kPa, 4 - 8 kgf/cm^2, 57 - 114 psi).

SST 09350-30020 (09350-00020)

Piston stroke: 1.5 - 3.0 mm (0.059 - 0.118 in.)

If the values are non-standard, inspect the brake band.

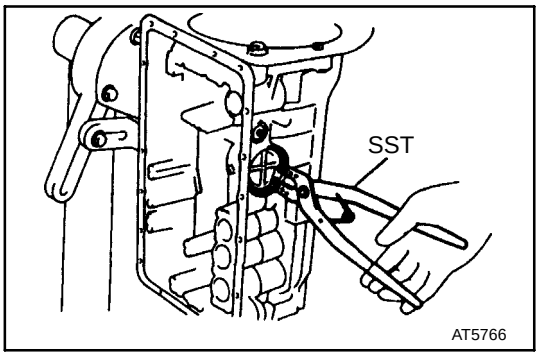

28. REMOVE 2ND COAST BRAKE COVER, PISTON ASSEMBLY AND SPRING

(a) Using SST, remove the snap ring.

SST 09350-30020 (09350-07060)

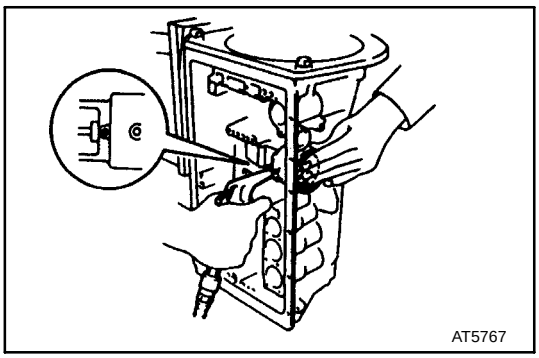

(b) Applying compressed air to the oil hole, remove the 2nd coast brake cover, piston assembly and spring.

(c) Remove the 2 O-rings from the cover.

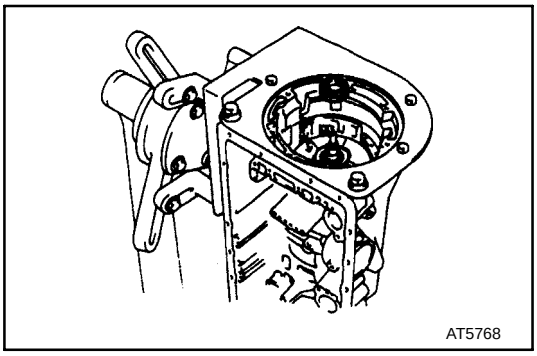

29. REMOVE O/D SUPPORT ASSEMBLY

(a) Remove the assembled bearing.

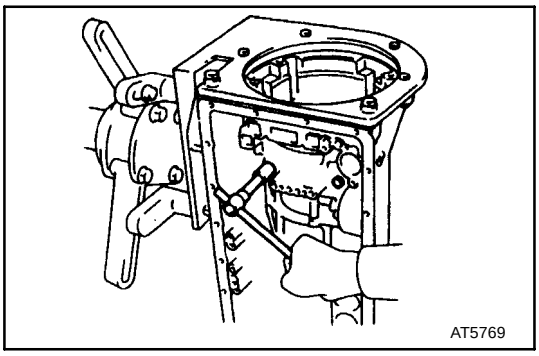

(b) Remove the 2 bolts holding the O/D support assembly to the case.

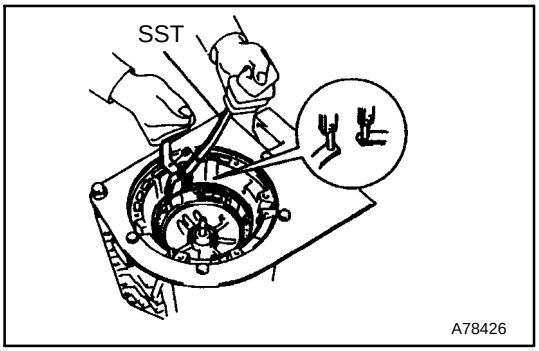

(c) Using SST, remove the snap ring.

SST 09350-30020 (09350-07060)

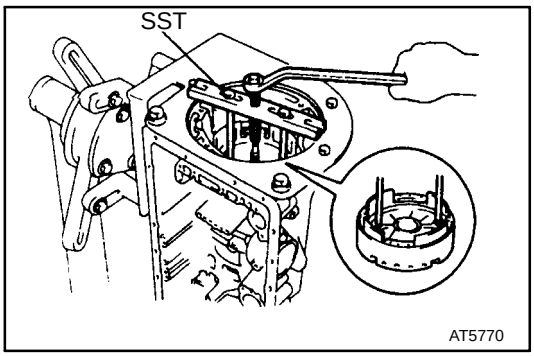

(d) Using SST, remove the O/D support assembly.
SST 09350-30020 (09350-07020)

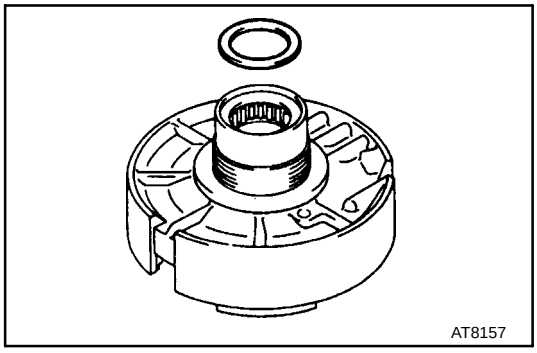

(e) Remove the race.

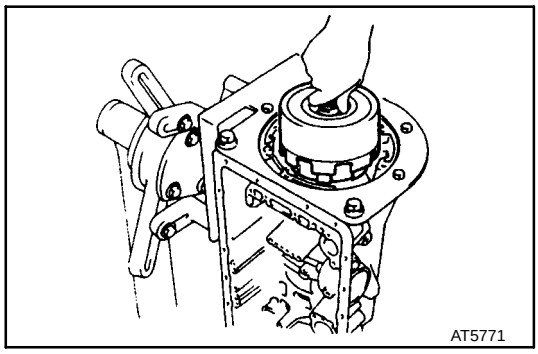

30. REMOVE DIRECT CLUTCH WITH FORWARD CLUTCH

(a) Remove the direct clutch with the forward clutch from the case.

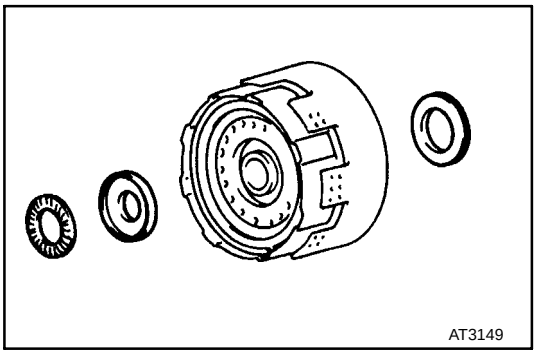

(b) Remove the 2 bearings and races.

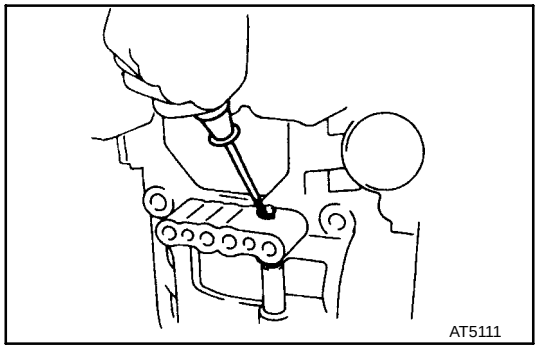

31. REMOVE 2ND COAST BRAKE BAND

(a) Remove the E-ring from the pin.

(b) Remove the pin from the brake band.

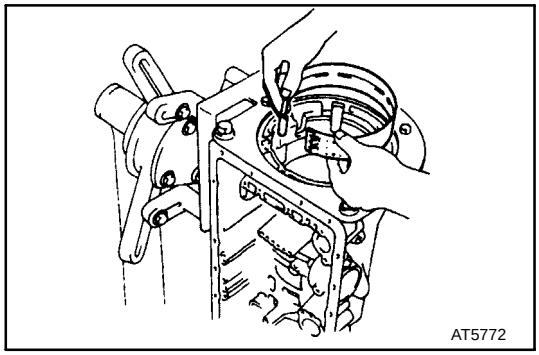

(c) Remove the 2nd coast brake from the case.

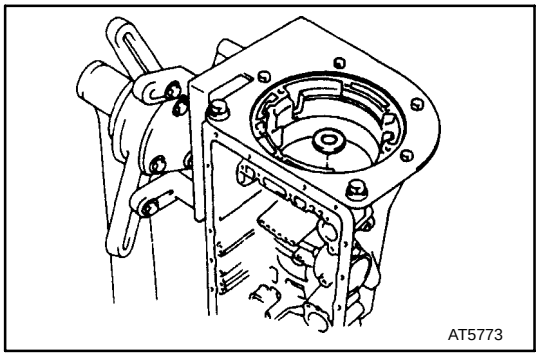

32. REMOVE FRONT PLANETARY GEAR UNIT

(a) Remove the race.

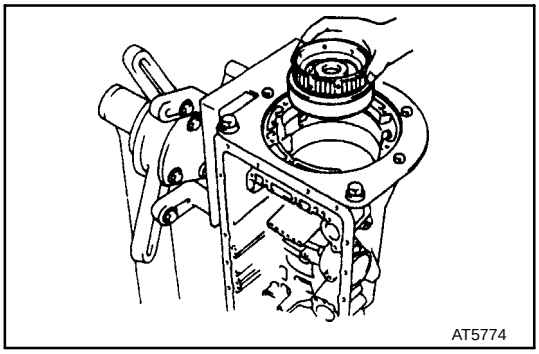

(b) Remove the front planetary ring gear from the case.

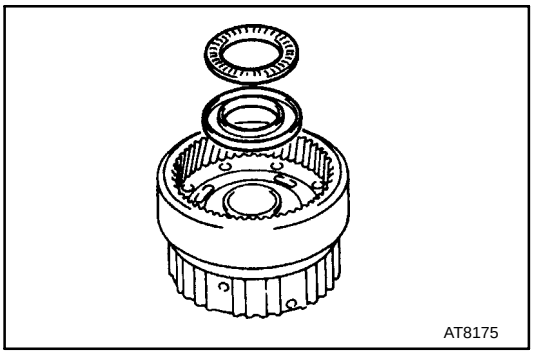

(c) Remove the bearing and race.

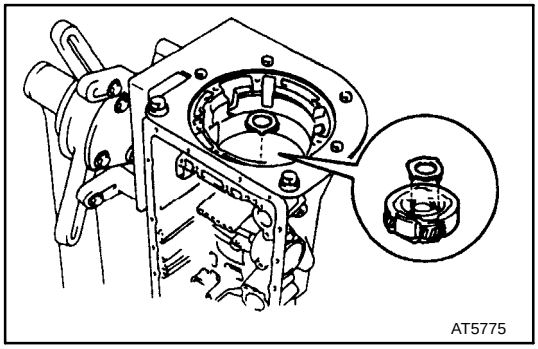

(d) Remove the race.

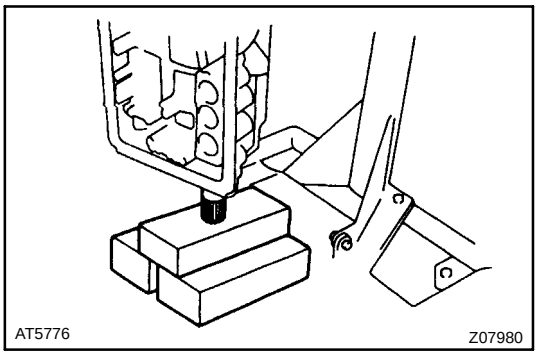

(e) With wooden blocks or equivalent under the output shaft, stand the transmission on the output shaft.

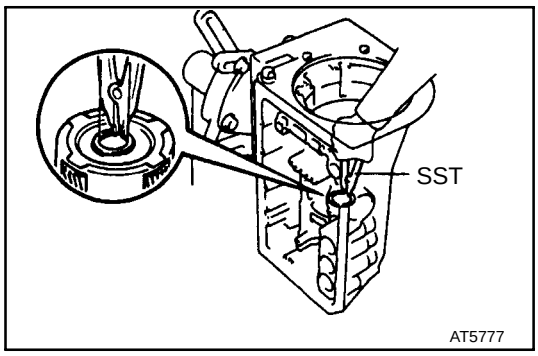

(f) Using SST, remove the snap ring.

SST 09350-30020 (09350-07070)

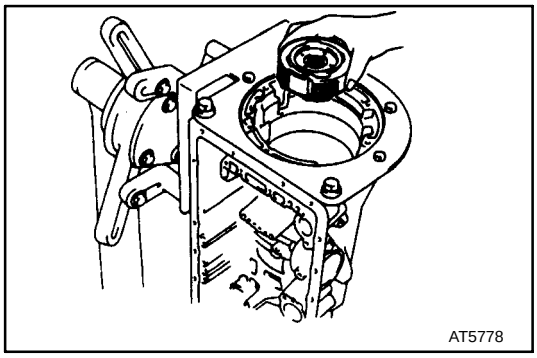

(g) Remove the front planetary gear from the case.

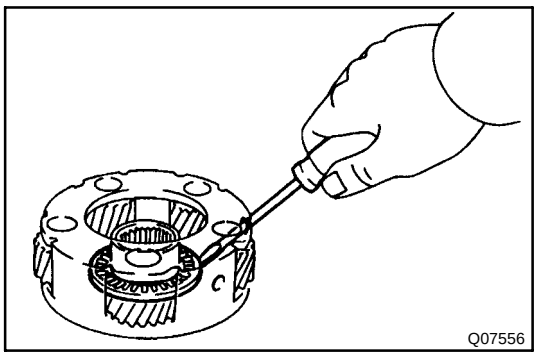

(h) Using a screwdriver, remove the bearing and race from the front planetary gear.

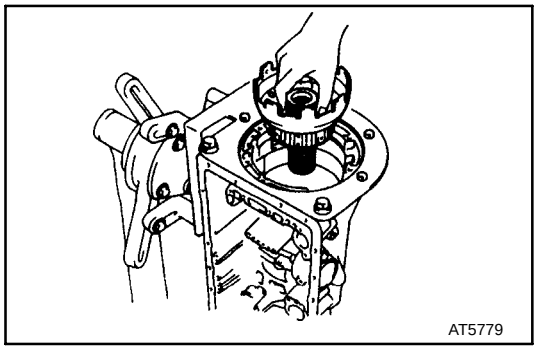

33. REMOVE PLANETARY SUN GEAR WITH NO. 1 ONE-WAY CLUTCH

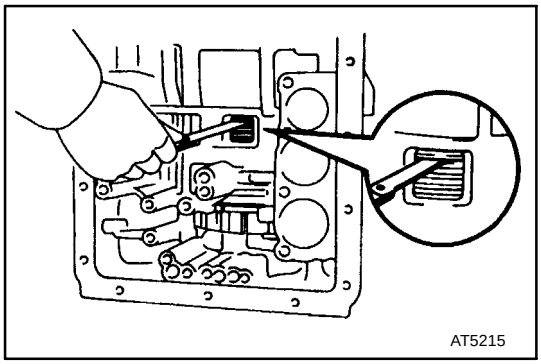

34. CHECK PACK CLEARANCE OF 2ND BRAKE

Using a feeler gauge, measure clearance between the snap ring and flange.

Pack clearance:

0.62 - 1.98 mm (0.0244 - 0.0780 in.)

If the values are non-standard, inspect the disc.

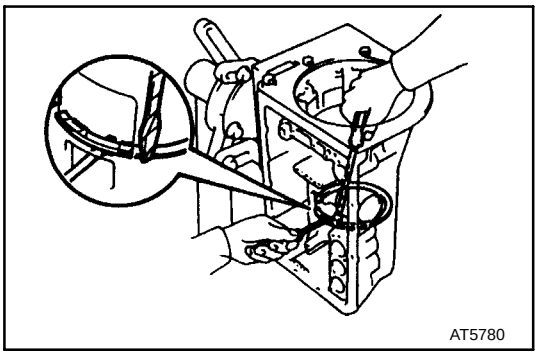

35. REMOVE FLANGE, PLATES AND DISCS OF 2ND BRAKE

(a) Using a screwdriver, remove the snap ring.

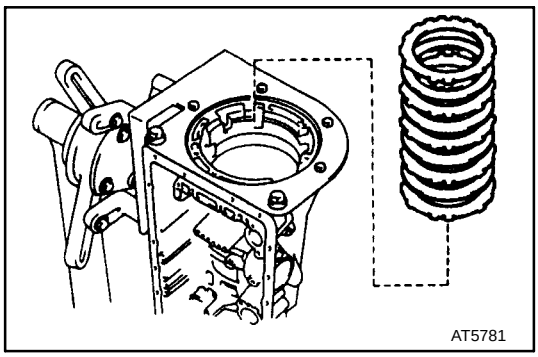

(b) Remove the flange, plates and discs as a set.

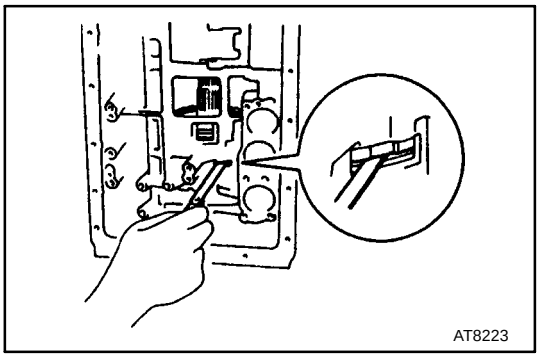

36. CHECK PACK CLEARANCE OF 1ST AND REVERSE BRAKE

Using a feeler gauge, measure the clearance between the plate and 2nd brake drum.

Pack clearance:

0.70 - 1.22 mm (0.0276 - 0.0480 in.)

If the values are non-standard, inspect the discs.

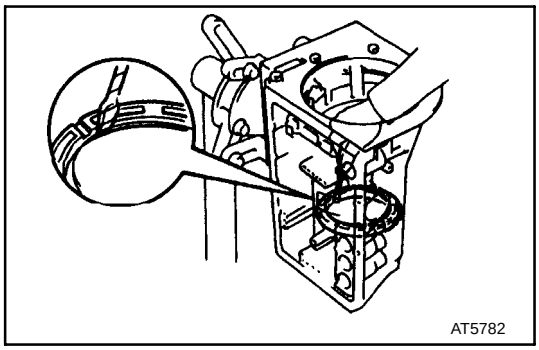

37. REMOVE 2ND BRAKE PISTON SLEEVE

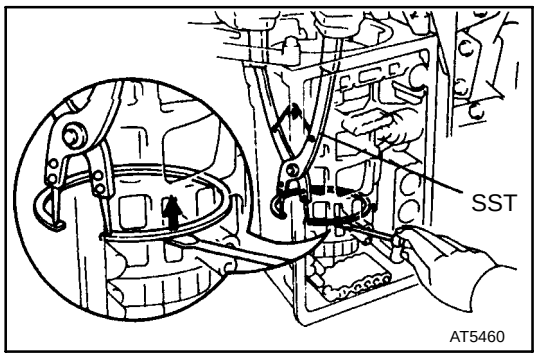

38. REMOVE REAR PLANETARY GEAR WITH SECOND BRAKE DRUM, 1ST AND REVERSE BRAKE PACK AND OUTPUT SHAFT

(a) Using SST and 2 screwdrivers, remove the snap ring.

SST 09350-30020 (09350-07060)

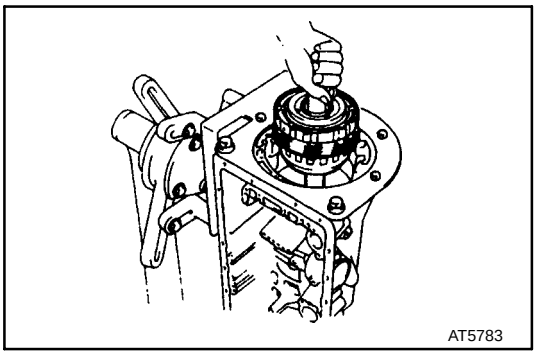

(b) Remove the rear planetary gear, 2nd brake drum, 1st and reverse brake pack and output shaft as an assembly.

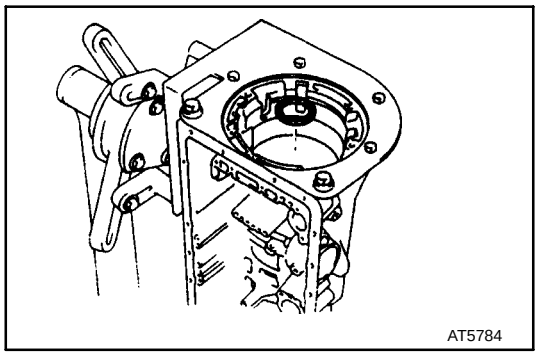

(c) Remove the assembled thrust bearing and race from the case.

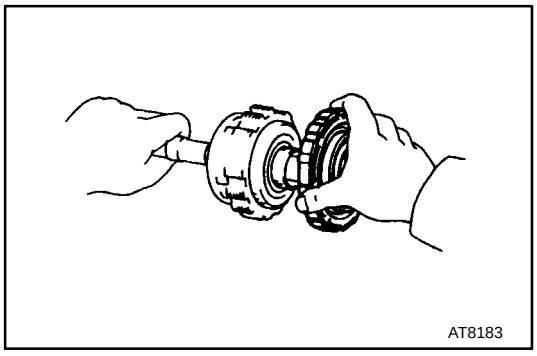

(d) Remove the 2nd brake drum assembly.

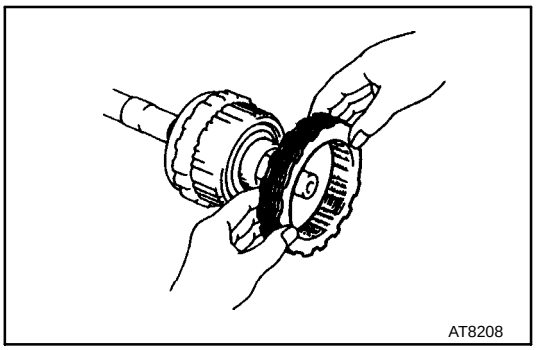

(e) Remove the cushion plate, flange, plates and discs of the 1st and reverse brake.

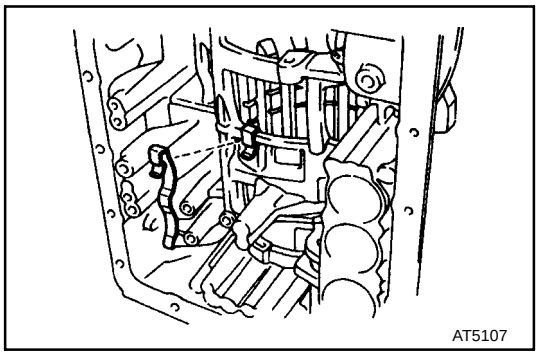

39. REMOVE LEAF SPRING

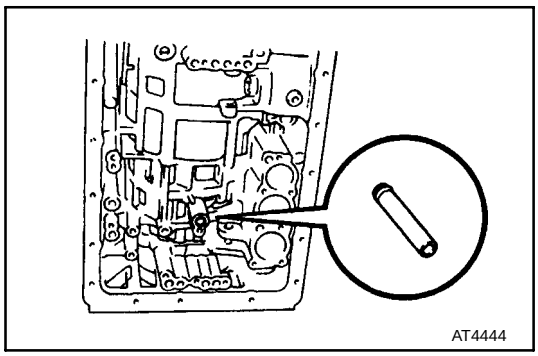

40. REMOVE BRAKE DRUM GASKET

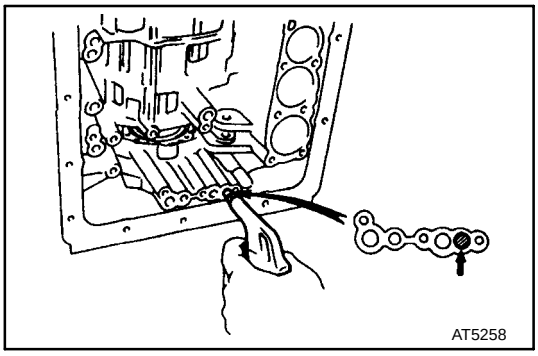

41. CHECK PISTON STROKE OF 1ST AND REVERSE BRAKE

Make sure the 1st and reverse brake pistons move smoothly when applying and releasing the compressed air into the transmission case.

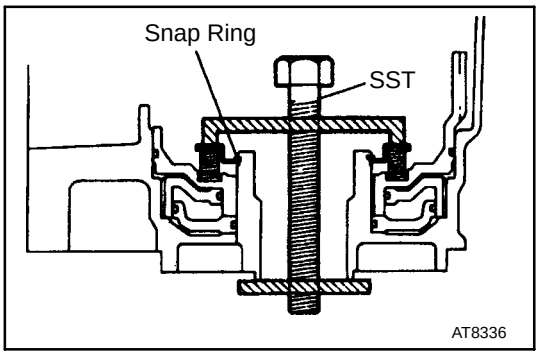

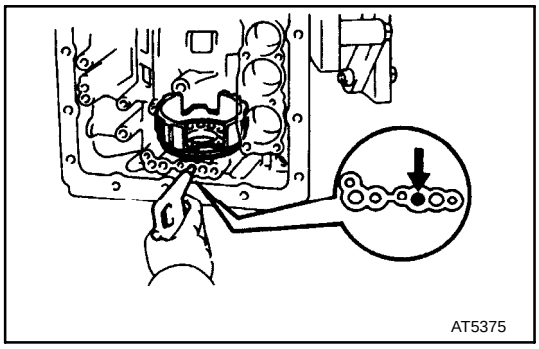

42. REMOVE COMPONENTS OF 1ST AND REVERSE BRAKE PISTON

(a) Set SST on the spring retainer, and compress the return spring.

SST 09350-30020 (09350-07050)

(b) Remove the snap ring with snap ring pliers.

(c) Remove the piston return spring.

(d) Hold the No.2 1st and reverse brake piston with hand, apply compressed air to the transmission case to remove the No.2 1st and reverse brake piston.

(e) Remove the No.2 1st and reverse brake piston. If the piston does not pop out with compressed air, lift the position out with needle-nose pliers.

(f) Remove the O-ring from the No. 2 piston.

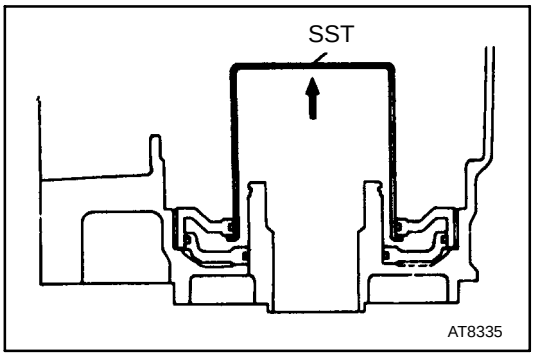

(g) Install SST behind the reaction sleeve and gradually lift it out on the transmission case.

SST 09350-30020 (09350-07080)

(h) Remove the O-ring from the reaction sleeve.

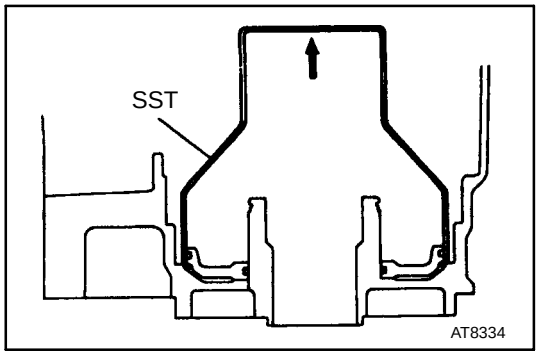

(i) Install SST behind the No. 1 brake piston and gradually lift it out of the transmission case.

SST 09350-30020 (09350-07090)

(j) Remove the 2 O-rings from the No. 1 piston.

COMPONENT PARTS

General Notes

The instructions here are organized so that you work on only one component group at a time. This will help avoid confusion from similar-looking parts of different subassemblies being on your workbench at the same time.
The component groups are inspected and repaired from the converter housing side.
As much as possible, complete the inspection, repair and assembly before proceeding to the next component group. If a component group can not be assembled because parts are being ordered, be sure to keep all parts of that group in a separate container while proceeding with disassembly, inspection, repair and assembly of other component groups.
Recommended ATF: DEXRON® II

GENERAL CLEANING NOTES:

1. **All disassembled parts should be washed clean and any fluid passages and holes blown through with compressed air.**
2. **When using compressed air to dry parts, always aim away from yourself to prevent accidentally spraying ATF or kerosene in your face.**
3. **The recommended ATF or kerosene should be used for cleaning.**

PARTS ARRANGEMENT:

1. **After cleaning, the parts should be arranged in the correct order to allow efficient inspection, repairs and reassembly.**
2. **When disassembling a valve body, be sure to keep each valve together with the corresponding spring.**
3. **New discs for the brakes and clutches that are to be used for replacement must be soaked in ATF for at least 15 minutes before assembly.**

GENERAL ASSEMBLY:

1. **All oil seal rings, clutch discs, clutch plates, rotating parts, and sliding surfaces should be coated with ATF prior to reassembly.**
2. **All gaskets and rubber O-rings should be replaced.**
3. **Make sure that the ends of a snap ring are not aligned with one of the cutouts and are installed in the groove correctly.**
4. **If a worn bushing is to be replaced, the subassembly containing that bushing must be replaced.**
5. **Check thrust bearings and races for wear or damage. Replace if necessary.**
6. **Use petroleum jelly to keep parts in place.**

OIL PUMP

COMPONENTS

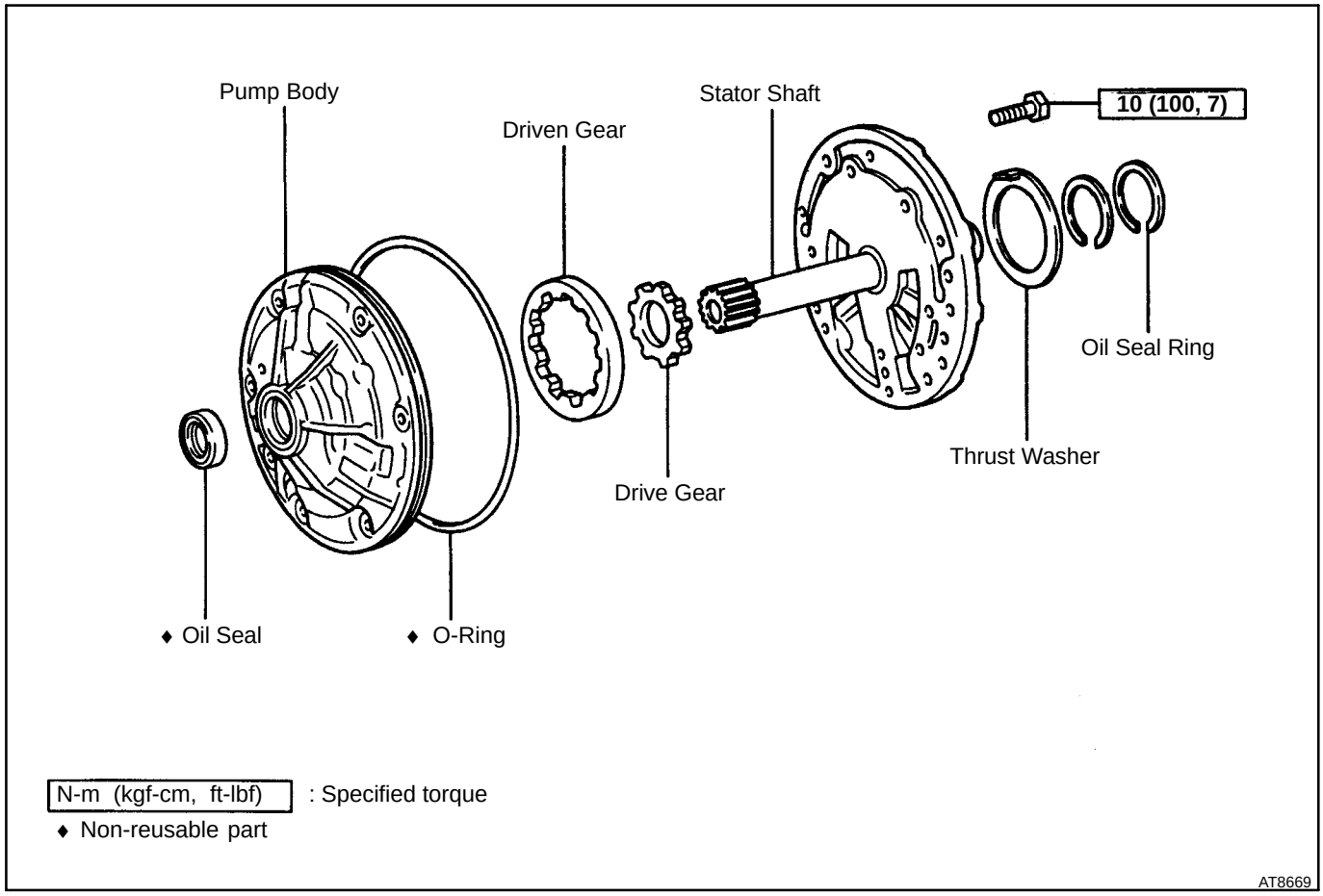

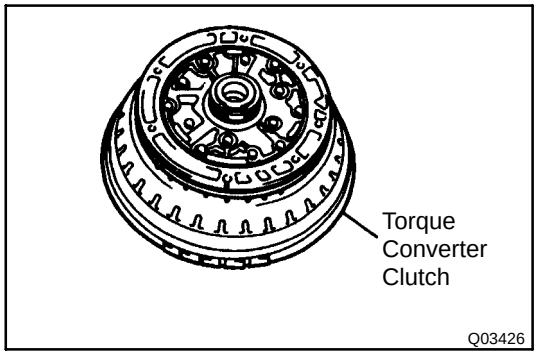

OIL PUMP DISASSEMBLY

1. USE TORQUE CONVERTER CLUTCH AS WORK STAND

Place the oil pump body on the torque converter clutch.

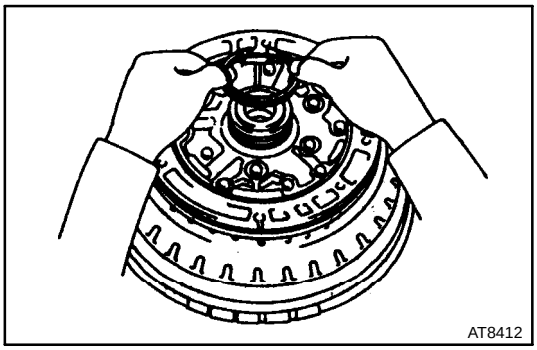

2. REMOVE OIL SEAL RINGS

Remove the 2 oil seal rings from the stator shaft back side.

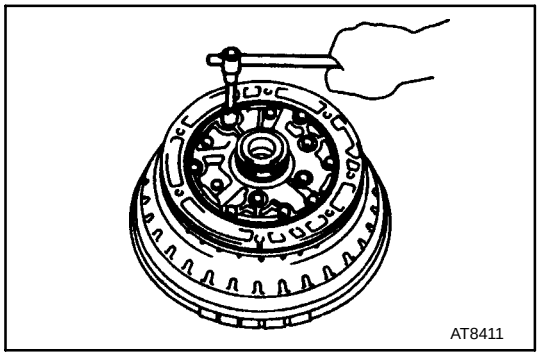

3. REMOVE STATOR SHAFT

(a) Remove the 13 bolts, and then remove the stator shaft from the oil pump body.

(b) Remove the oil pump body from the torque converter clutch.

4. REMOVE OIL PUMP DRIVE GEAR AND DRIVEN GEAR

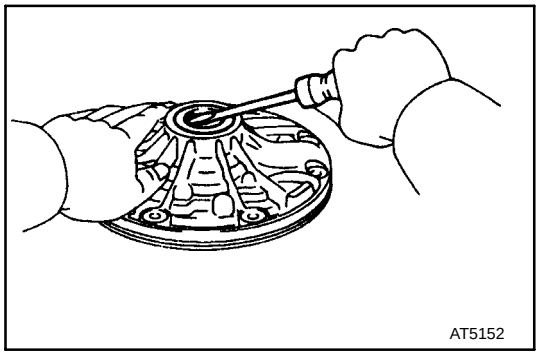

5. REMOVE OIL SEAL

Pry off the oil seal with a screwdriver.

OIL PUMP INSPECTION

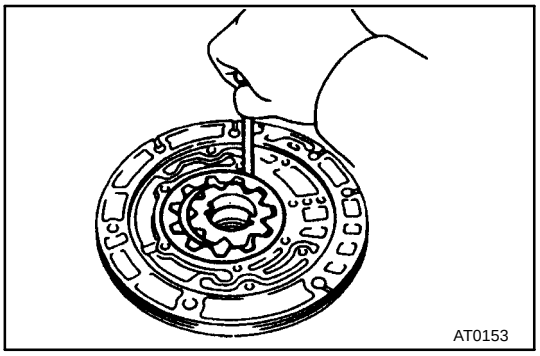

1. CHECK BODY CLEARANCE OF DRIVEN GEAR

Push the driven gear to one side of the body.
Using a feeler gauge, measure the clearance.
Standard body clearance:
0.07 - 0.15 mm (0.0028 - 0.0059 in.)
Maximum body clearance:
0.30 mm (0.0120 in.)
If the body clearance is greater than the maximum, replace the drive gear, driven gear or pump body.

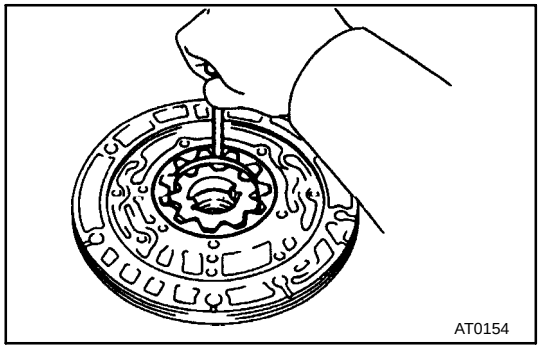

2. CHECK TIP CLEARANCE OF DRIVEN GEAR

Measure between the driven gear teeth and the crescent-shaped part of the pump body.
Standard tip clearance:
0.11 - 0.14 mm (0.0043 - 0.0055 in.)
Maximum tip clearance: 0.30 mm (0.0120 in.)
If the tip clearance is greater than the maximum, replace the drive gear, driven gear or pump body.

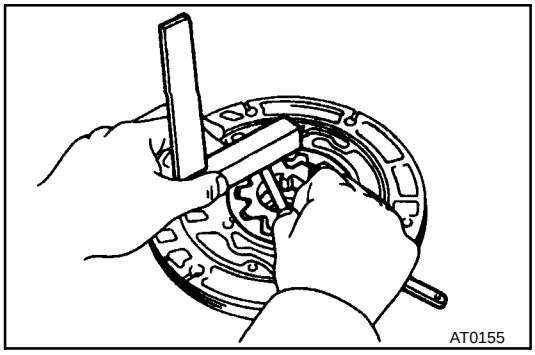

3. CHECK SIDE CLEARANCE OF BOTH GEARS

Using a steel straight edge and a feeler gauge, measure the side clearance of both gears.

Standard side clearance:

0.02 - 0.05 mm (0.0008 - 0.0020 in.)

Maximum side clearance: 0.10 mm (0.0040 in.)

If the side clearance is greater than the maximum, replace the drive gear, driven gear or pump body.

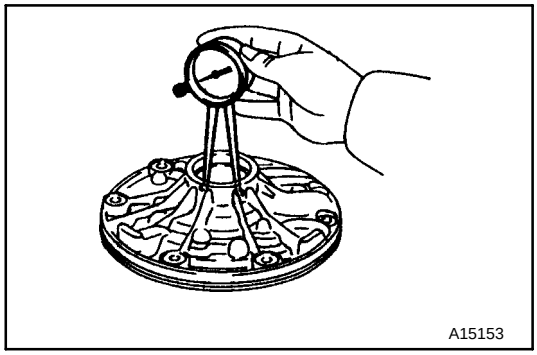

4. CHECK OIL PUMP BODY BUSHING

Using a dial indicator, measure the inside diameter of the oil pump body bushing.

Maximum inside diameter: 38.19 mm (1.5035 in.)

If the inside diameter is greater than the maximum, replace the oil pump body.

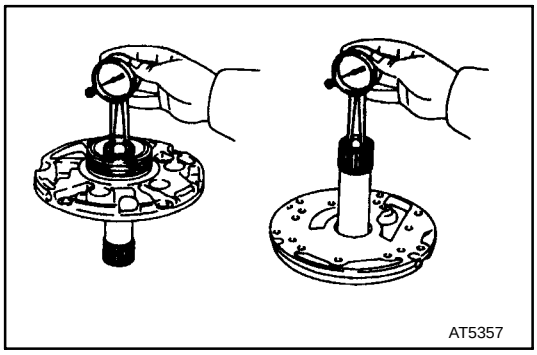

5. CHECK STATOR SHAFT BUSHINGS

Using a dial indicator, measure the inside diameter of the stator shaft bushing.

Maximum inside diameter:

Front side 21.58 mm (0.8496 in)

Rear side 27.08 mm (1.0661 in.)

If the inside diameter is greater than the maximum, replace the stator shaft.

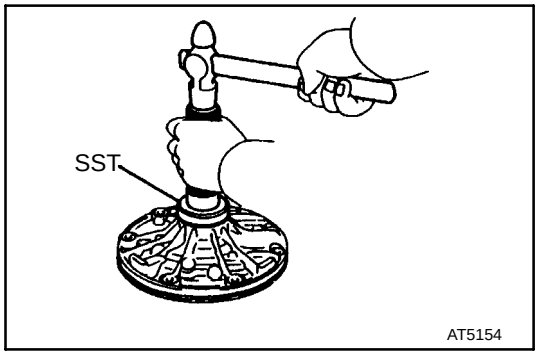

OIL PUMP ASSEMBLY

1. INSTALL FRONT OIL SEAL

(a) Using SST and a hammer, install a new oil seal. The seal end should be flush with the outer edge of the pump body.

SST 09350-30020 (09351-32140)

(b) Coat the oil seal lip with MP grease.

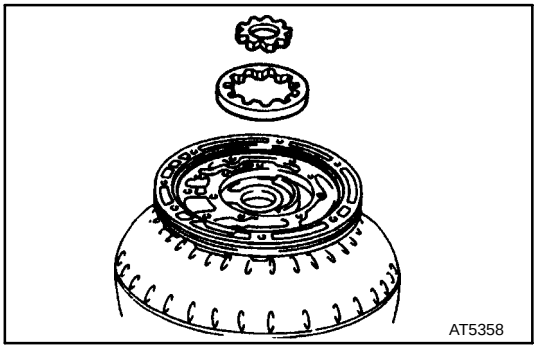

2. INSTALL DRIVEN GEAR AND DRIVE GEAR TO OIL PUMP BODY

(a) Place the oil pump body on the torque converter clutch.

(b) Coat the driven gear and drive gear with ATF.

(c) Install the driven gear and drive gear.

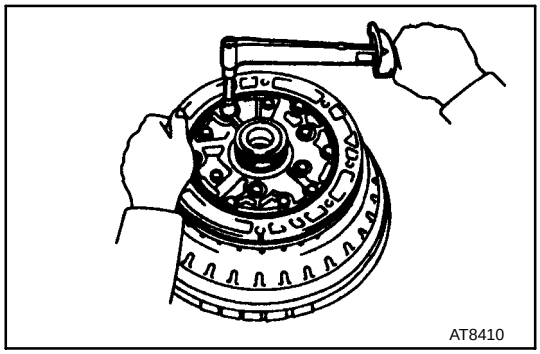

3. INSTALL STATOR SHAFT TO PUMP BODY

(a) Align the stator shaft with each bolt hole.

(b) Tighten the 13 bolts.

Torque: 10 N-m (100 kgf-cm, 7 ft-lbf)

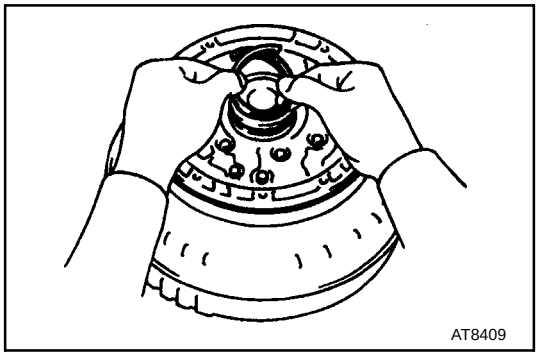

4. INSTALL OIL SEAL RINGS

(a) Coat 2 oil seal rings with ATF.

(b) Install the 2 oil seal rings to the stator shaft groove, then snug them down by squeezing their ends together.

NOTICE: Do not spread the ring ends too much.
HINT: After installing the oil seal rings, check that they rotate smoothly.

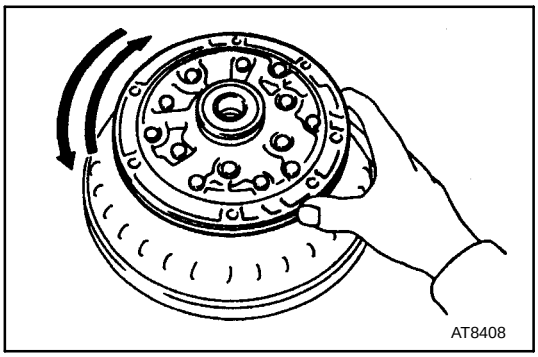

5. CHECK OIL PUMP DRIVE GEAR ROTATION

Make sure the drive gear rotates smoothly.

OVERDRIVE DIRECT CLUTCH

COMPONENTS

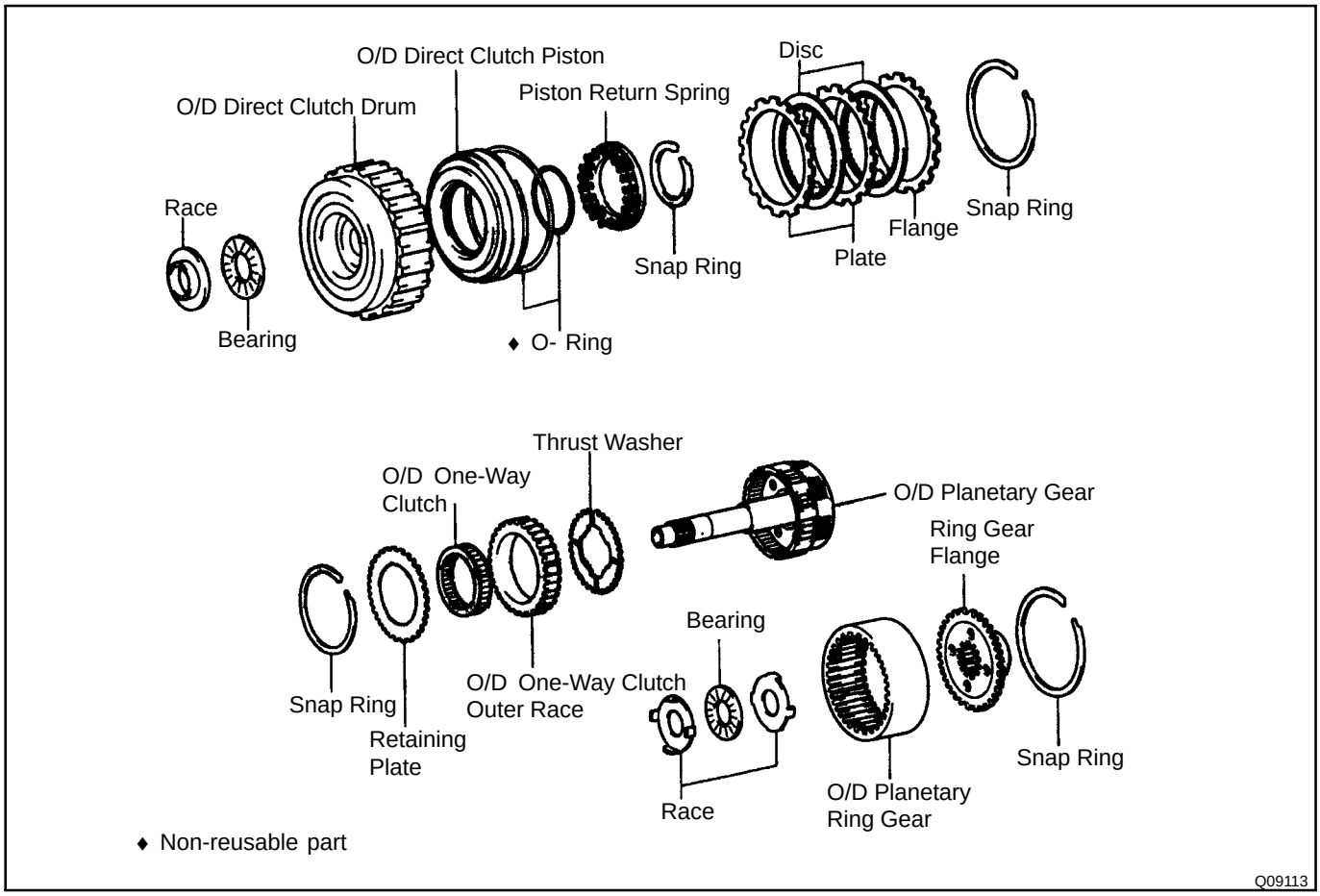

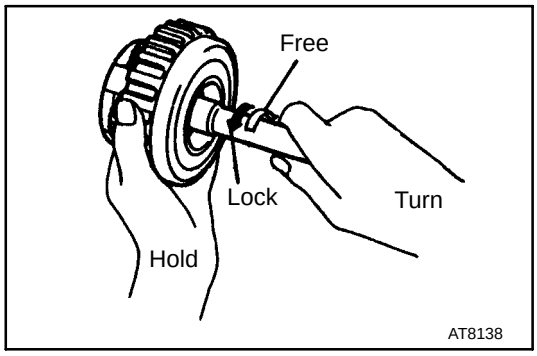

O/D PLANETARY GEAR, DIRECT CLUTCH AND ONE-WAY CLUTCH DISASSEMBLY

1. CHECK OPERATION OF ONE-WAY CLUTCH

Hold the O/D direct clutch drum and turn the input shaft.

Check that the input shaft must be able to turn freely clockwise and locks counterclockwise.

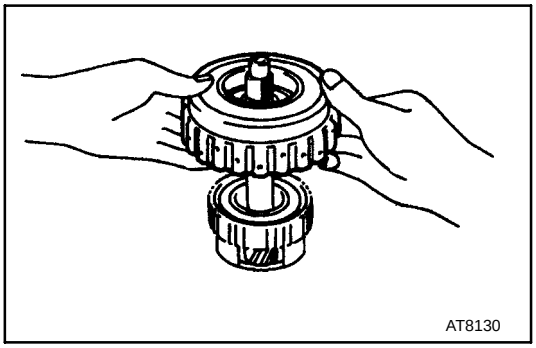

2. REMOVE O/D DIRECT CLUTCH ASSEMBLY FROM O/D PLANETARY GEAR

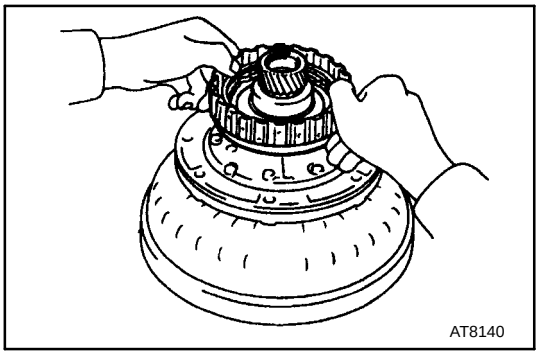

3. CHECK PISTON STROKE OF O/D DIRECT CLUTCH

(a) Place the oil pump onto the torque converter clutch, and then place the O/D direct clutch assembly onto the oil pump.

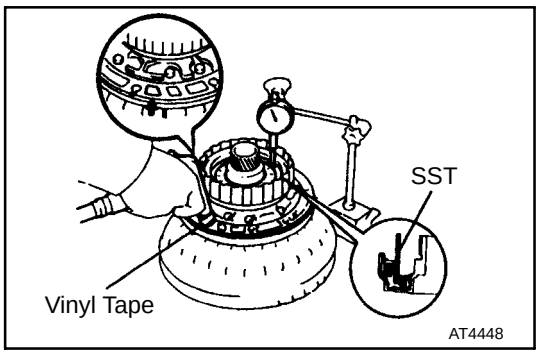

(b) Using SST and a dial indicator, measure the O/D direct clutch piston stroke while applying and releasing compressed air (392 - 785 kPa, 4 - 8 kgf/cm^2, 57-114 psi).

SST 09350-30020 (09350-06120)

Piston stroke: 1.85 - 2.15 mm (0.0728 - 0.0846 in.)

If the values are non-standard, inspect the discs.

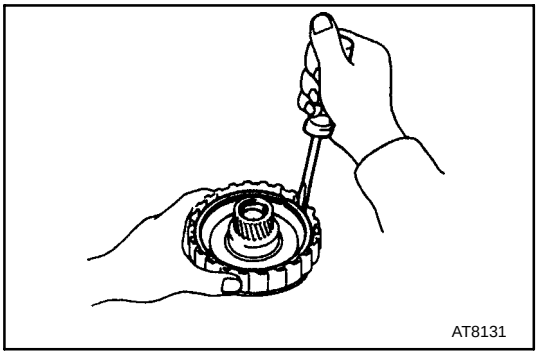

4. REMOVE FLANGE, PLATE AND DISC

(a) Using a screwdriver, remove the snap ring from the O/D direct clutch drum.

(b) Remove the flange, plate and disc.

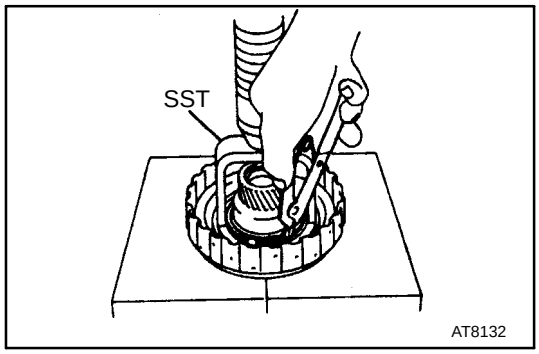

5. REMOVE PISTON RETURN SPRING

(a) Place SST on the spring retainer and compress the return spring with a press.

SST 09350-30020 (09350-07040)

(b) Using snap ring pliers, remove the snap ring.

(c) Remove the piston return spring.

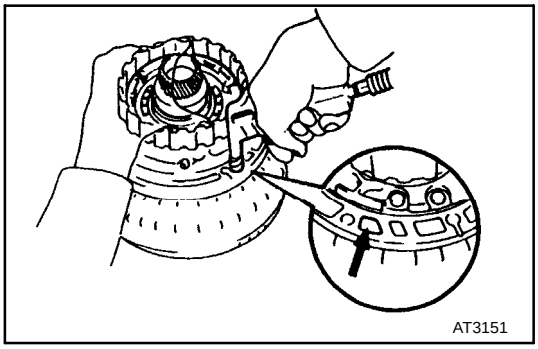

6. REMOVE O/D DIRECT CLUTCH PISTON

(a) Place the oil pump onto the torque converter clutch and then place the O/D direct clutch onto the oil pump.

(b) Hold the O/D direct clutch piston with hand, apply compressed air to the oil pump to remove the O/D direct clutch piston.

(c) Remove the O/D direct clutch piston.

(d) Remove the 2 O-rings from the piston.

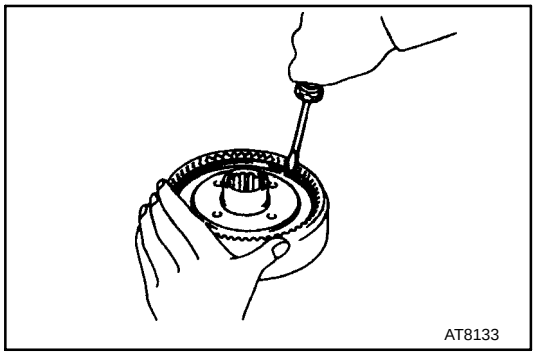

7. REMOVE RING GEAR FLANGE

(a) Using a screwdriver, remove the snap ring.

(b) Remove the ring gear flange.

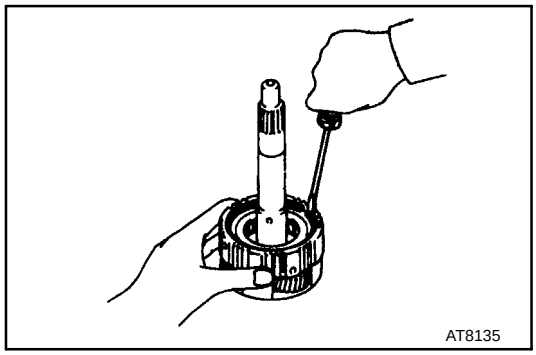

8. REMOVE RETAINING PLATE

(a) Using a screwdriver, remove the snap ring.

(b) Remove the retaining plate.

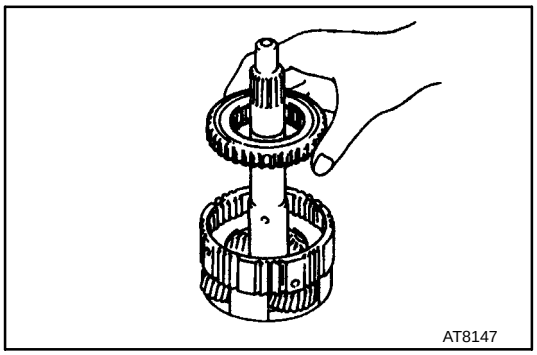

9. REMOVE O/D ONE-WAY CLUTCH WITH OUTER RACE

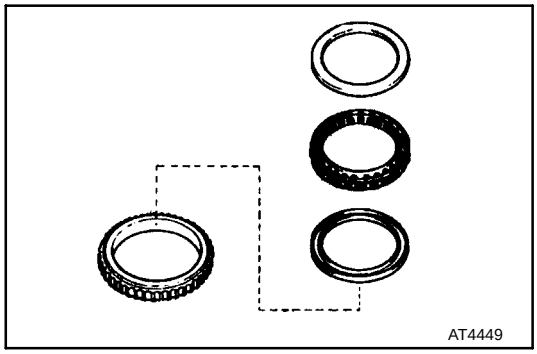

10. REMOVE ONE-WAY CLUTCH FROM OUTER RACE

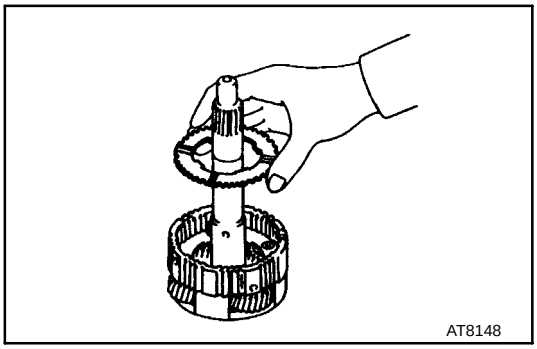

11. REMOVE THRUST WASHER

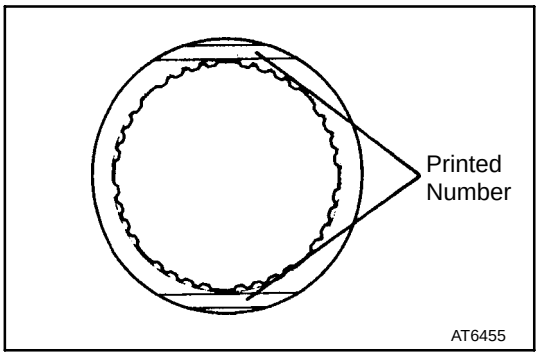

O/D PLANETARY GEAR AND O/D DIRECT CLUTCH INSPECTION

1. INSPECT DISC, PLATE AND FLANGE

Check to see if the sliding surface of the disc, plate and flange are worn or burnt. If necessary, replace them.
HINT: If the lining of the disc is peeling off or discolored, or even if a part of the printed numbers are defaced, replace discs.

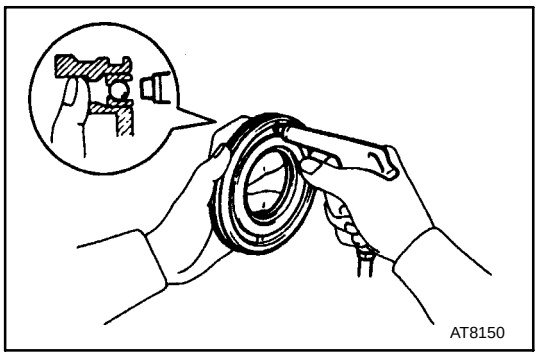

2. CHECK O/D DIRECT CLUTCH PISTON

(a) Check that the check ball is free by shaking the piston.

(b) Check that the valve does not leak by applying low-pressure compressed air.

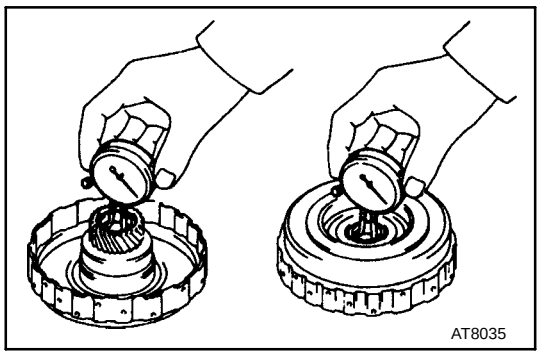

3. CHECK O/D DIRECT CLUTCH DRUM BUSHINGS

Using a dial indicator, measure the inside diameter of the clutch drum bushings.
Maximum inside diameter: 27.11 mm (1.0673 in.)
If the inside diameter is greater than the maximum, replace the clutch drum.

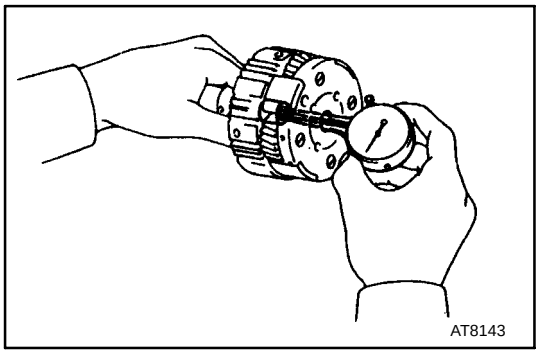

4. CHECK O/D PLANETARY GEAR BUSHING

Using a dial indicator, measure the inside diameter of the planetary gear bushing.
Maximum inside diameter: 11.27 mm (0.4437 in.)
If the inside diameter is greater than the maximum, replace the planetary gear.

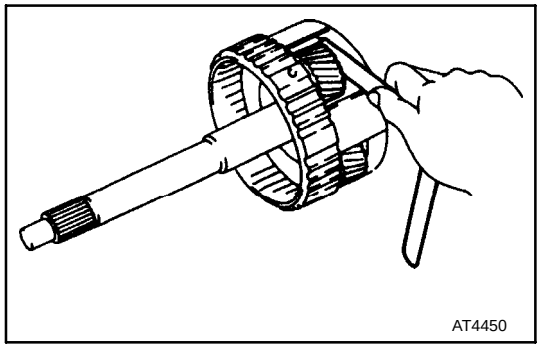

5. MEASURE PLANETARY PINION GEAR THRUST CLEARANCE

Using a feeler gauge, measure the planetary pinion gear thrust clearance.
Standard clearance:
0.20 - 0.60 mm (0.0079 - 0.0236 in.)
Maximum clearance:
1.00 mm (0.0394 in.)

If the clearance is greater than the maximum, replace the planetary gear assembly.

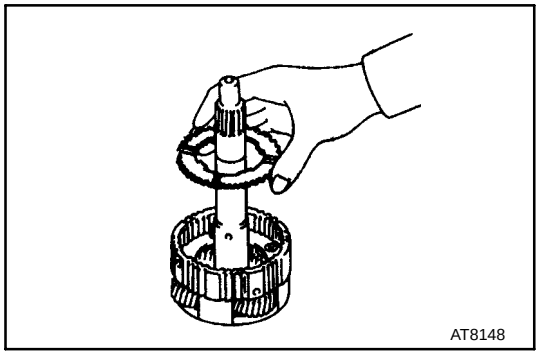

O/D PLANETARY GEAR, DIRECT CLUTCH AND ONE-W AY CLUTCH ASSEMBLY

1. INSTALL THRUST WASHER TO O/D PLANETARY GEAR

Install the thrust washer to the O/D planetary gear, the groove side facing upward.

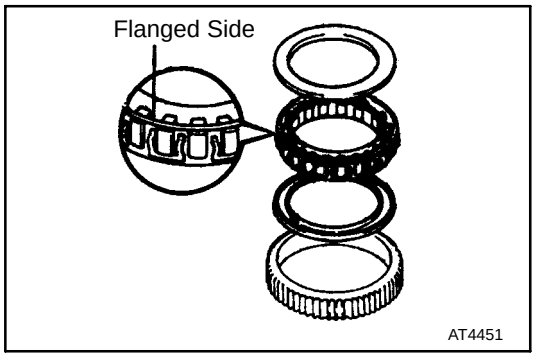

2. INSTALL O/D ONE-WAY CLUTCH

(a) Install the one-way clutch into the outer race, the flanged side of the one-way clutch facing upward.

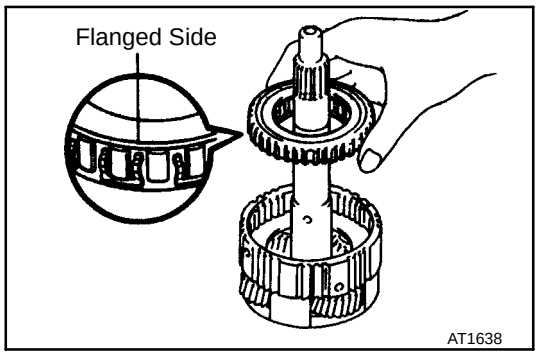

(b) Install the O/D one-way clutch with the outer race to the O/D planetary gear.

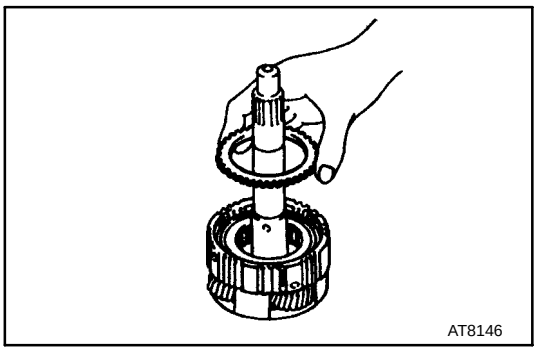

3. INSTALL RETAINING PLATE

(a) Install the retaining plate.

(b) Using a screwdriver, install the snap ring.

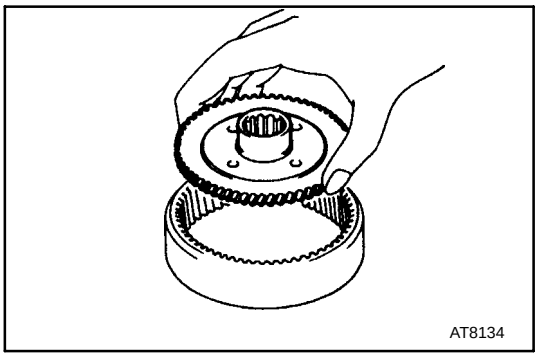

4. INSTALL RING GEAR FLANGE TO O/D PLANETARY RING GEAR

(a) Install the ring gear flange.

(b) Using a screwdriver, install the snap ring.

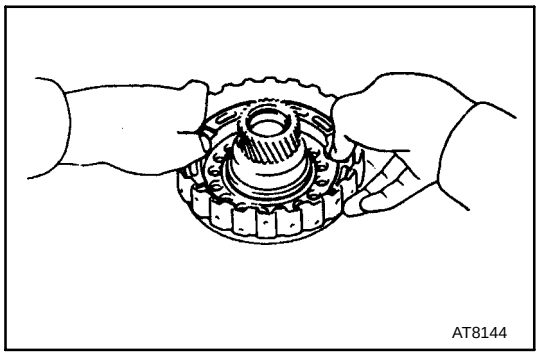

5. INSTALL O/D DIRECT CLUTCH PISTON

(a) Coat a new O-rings with ATF and install them on the O/D direct clutch piston.

(b) Being careful not to damage the O-rings, press in the direct clutch piston into the clutch drum with both hands.

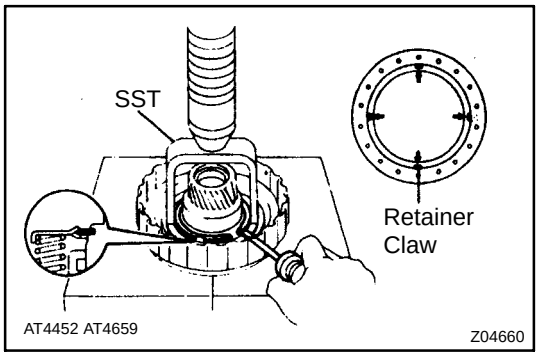

6. INSTALL PISTON RETURN SPRING

(a) Install the piston return spring to the piston.

(b) Place SST on the spring retainer, and compress the return spring with a press.

SST 09350-30020 (09350-07040)

(c) Install the snap ring with a screwdriver. Be sure the end gap of the snap ring is not aligned with the spring retainer claw.

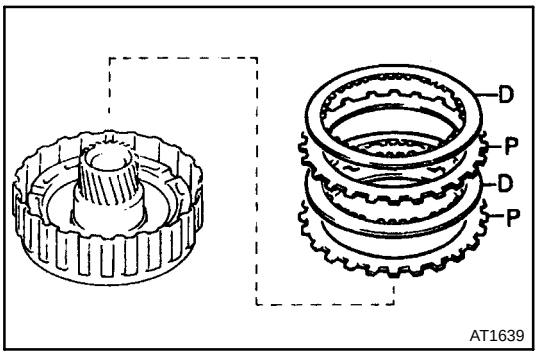

7. INSTALL PLATES, DISCS AND FLANGE

(a) Install the plates and discs.
Install in order: P = Plate D = Disc
P-D-P-D

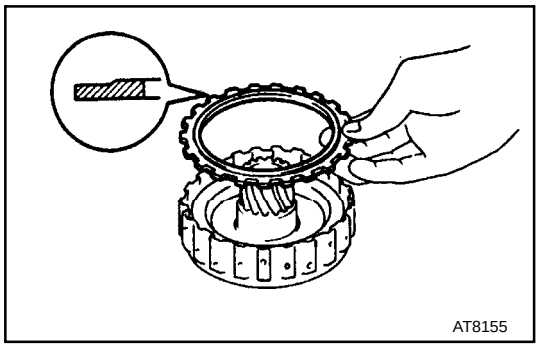

(b) Install the flange, the flat end facing downward.

(c) Using a screwdriver, install the snap ring.

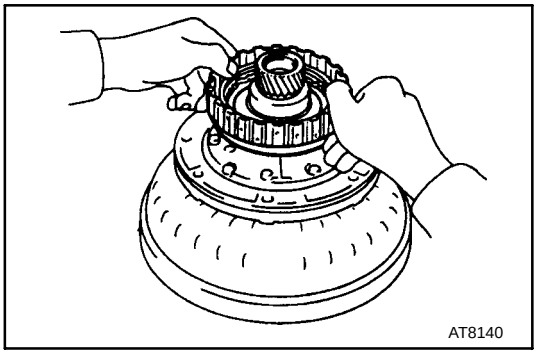

8. CHECK PISTON STROKE OF O/D DIRECT CLUTCH

(a) Place the oil pump onto the torque converter clutch, and then place the O/D direct clutch assembly onto the oil pump.

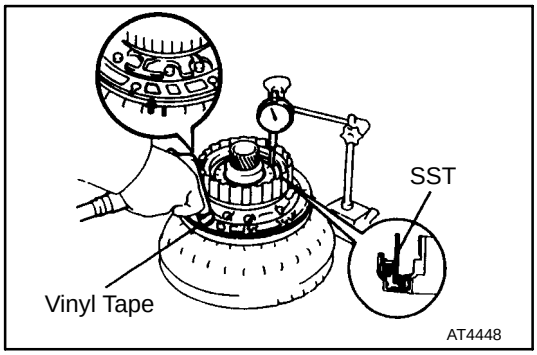

(b) Using SST and a dial indicator, measure the O/D direct clutch piston stroke while applying and releasing compressed air (392 - 785 kPa, 4 - 8 kgf/cm^2, 57-114 psi).

SST 09350-30020 (09350-06120)

Piston stroke:

1.85 - 2.15 mm (0.0728 - 0.0846 in.)

If the piston stroke is less than the limit, parts may have been assembled incorrectly, check and reassemble again.

If the piston stroke is non-standard, select another flange.

HINT: There are 6 different thicknesses for the flange.

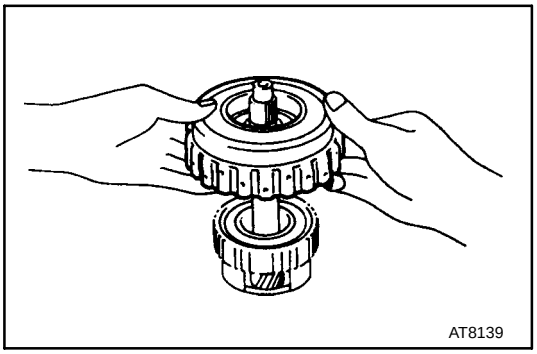

Flange thickness

mm (in.)

No.	Thickness	No.	Thickness
16	3.6 (0.142)	19	3.3 (0.130)
17	3.5 (0.138)	20	3.2 (0.126)
18	3.4 (0.134)	21	3.1 (0.122)

9. INSTALL O/D DIRECT CLUTCH ASSEMBLY

(a) Align the flukes of the discs in the direct clutch.

(b) Install the direct clutch assembly onto the O/D planetary gear.

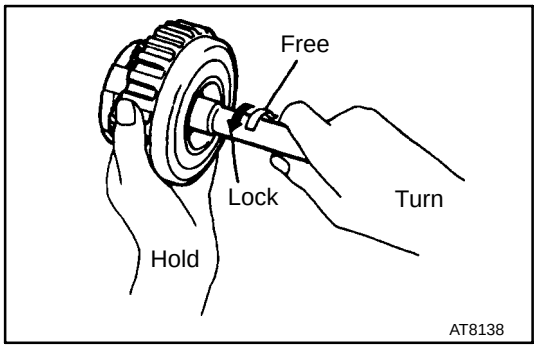

10. CHECK OPERATION OF ONE-WAY CLUTCH

Hold the O/D direct clutch drum and turn the input shaft.

Check that the input shaft must be able to turn freely clockwise and locks counterclockwise.

OVERDRIVE BRAKE

COMPONENTS

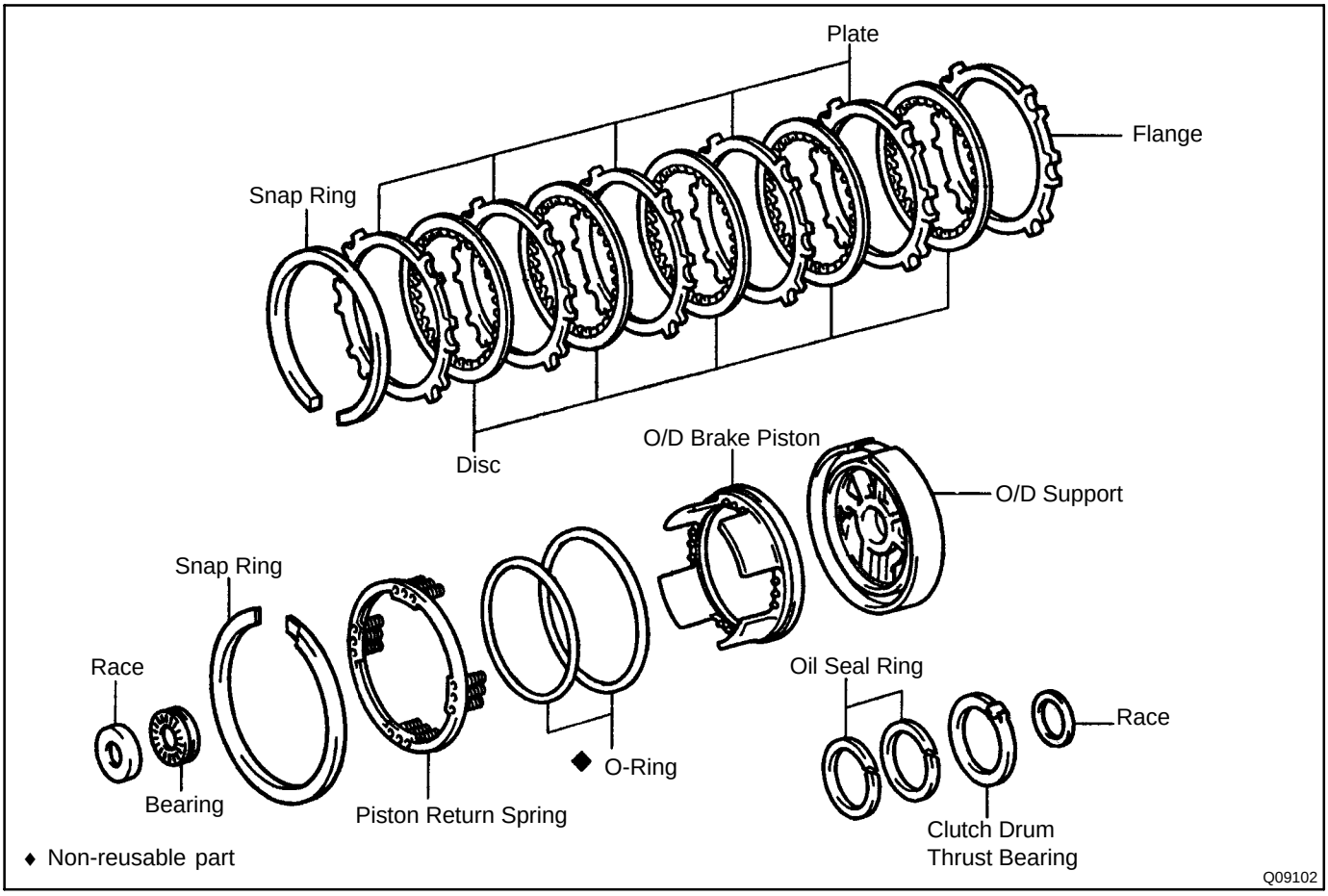

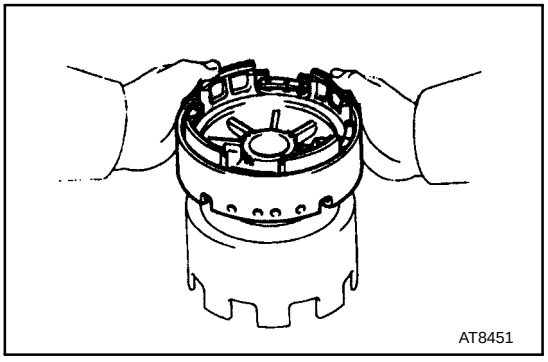

O/D BRAKE DISASSEMBLY

1. CHECK O/D BRAKE PISTON MOVEMENT

(a) Place the O/D support assembly onto the direct clutch assembly.

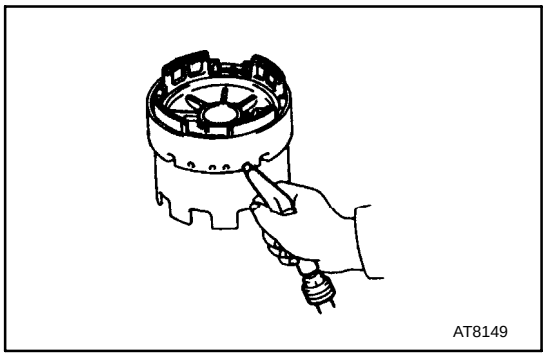

(b) Apply compressed air into the oil passage as shown, and be sure that the O/D brake piston moves smoothly.

2. REMOVE CLUTCH DRUM THRUST WASHER FROM O/D SUPPORT

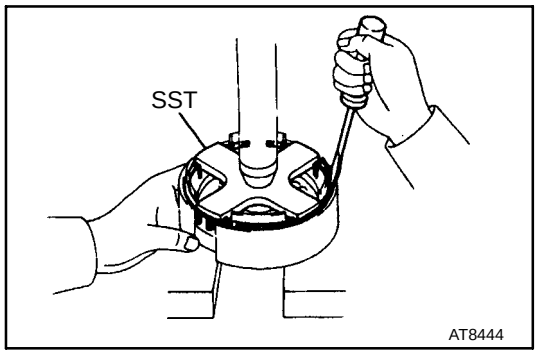

3. REMOVE PISTON RETURN SPRING

(a) Place SST on the spring retainer, and compress the return spring with a press.

SST 09350-30020 (09350-07030)

(b) Remove the snap ring with a screwdriver.

(c) Remove the piston return spring.

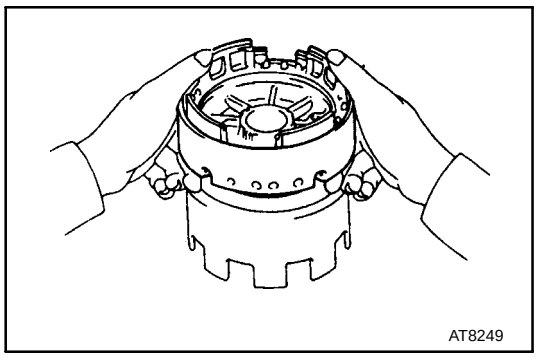

4. REMOVE O/D BRAKE PISTON

(a) Place the O/D support onto the direct clutch assembly.

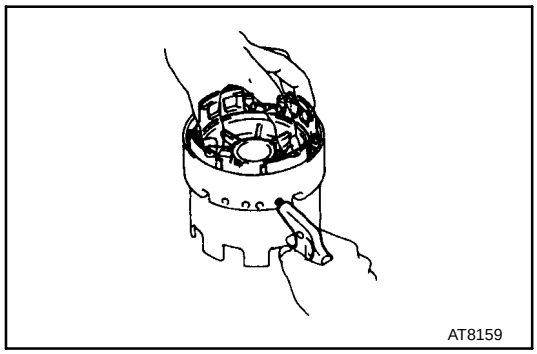

(b) Hold the O/D brake piston so it does not slant, and apply compressed air into the passage to remove the O/D brake piston.

(c) Remove the O/D brake piston.

(d) Remove the 2 O-rings from the piston.

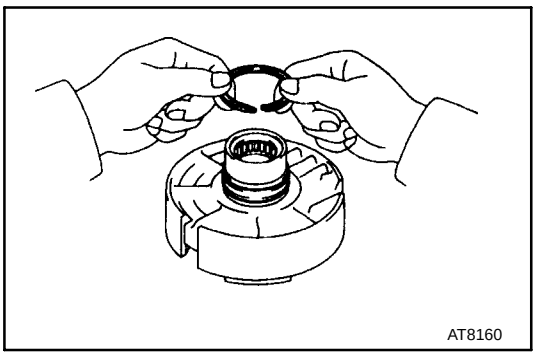

5. REMOVE 2 OIL SEAL RINGS

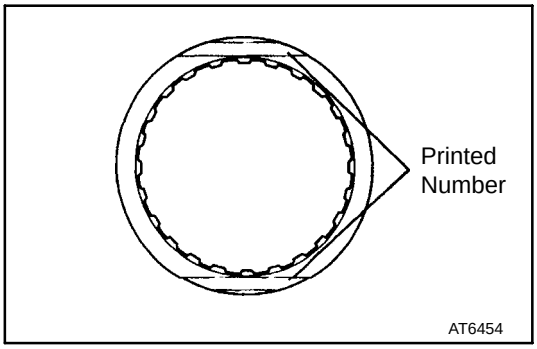

O/D BRAKE INSPECTION

INSPECT DISC, PLATE AND FLANGE

Check to see if the sliding surface of the disc, plate and flange are worn or burnt. If necessary, replace them.
HINT: If the lining of the disc is peeling off or discolored, or even if a part of the printed numbers are defaced, replace all discs.

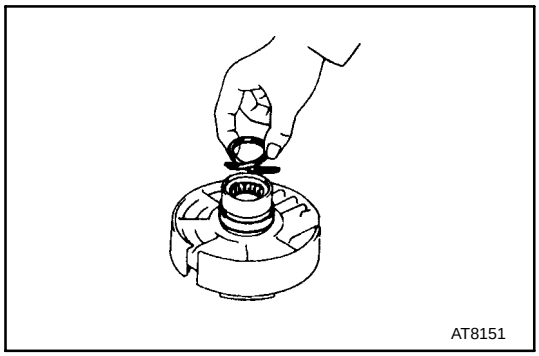

O/D BRAKE ASSEMBLY

1. INSTALL OIL SEAL RINGS

(a) Coat 2 oil seal rings with ATF.

(b) Install the 2 oil seal rings to the O/D support groove, then settle them down by squeezing their ends together.

NOTICE: Do not squeeze the ring ends more than necessary.

HINT: After installing the oil seal rings, check that they rotate smoothly.

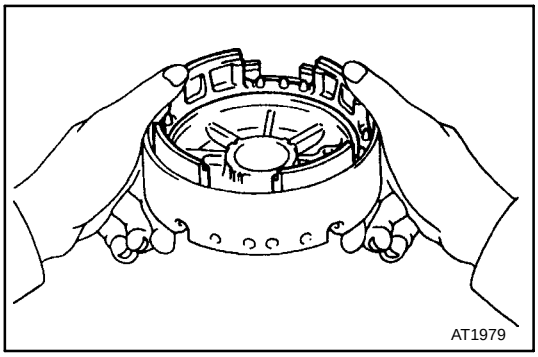

2. INSTALL O/D BRAKE PISTON

(a) Coat 2 new O-rings with ATF and install them on the O/D brake piston.

(b) Being careful not to damage the O-rings, press in the brake piston into the O/D support with both hands.

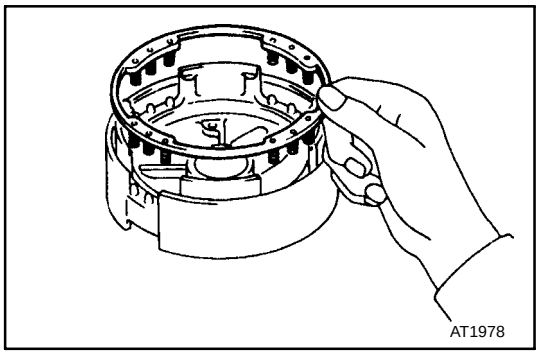

3. INSTALL PISTON RETURN SPRING

(a) Install the piston return spring.

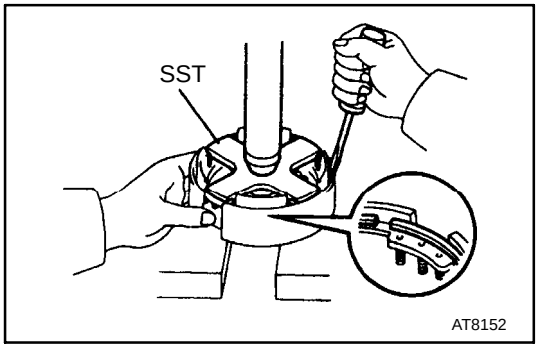

(b) Place SST on the spring retainer, and compress the return spring with a press.

SST 09350-30020 (09350-07030)

(c) Install the snap ring with a screwdriver. Be sure the end gap of the snap ring is not aligned with the cutout portion of the O/D support.

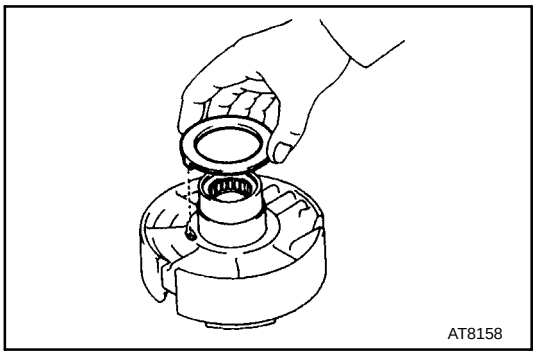

4. INSTALL CLUTCH DRUM THRUST WASHER

Coat the thrust washer with petroleum jelly and install it onto the O/D support.
HINT: Make sure that the lug shape matches the hole on the O/D support.

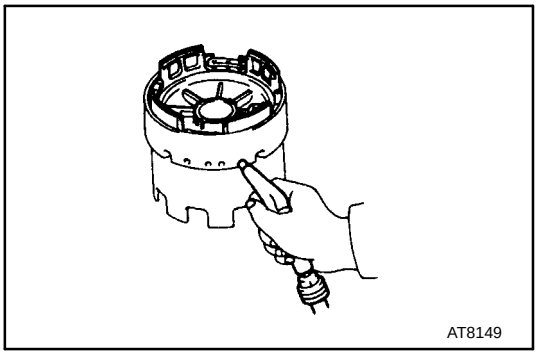

5. CHECK O/D BRAKE PISTON MOVEMENT

(a) Place the O/D support assembly onto the direct clutch assembly.

(b) Apply compressed air into the oil passage as shown, and be sure that the O/D brake piston moves smoothly.

DIRECT CLUTCH

COMPONENTS

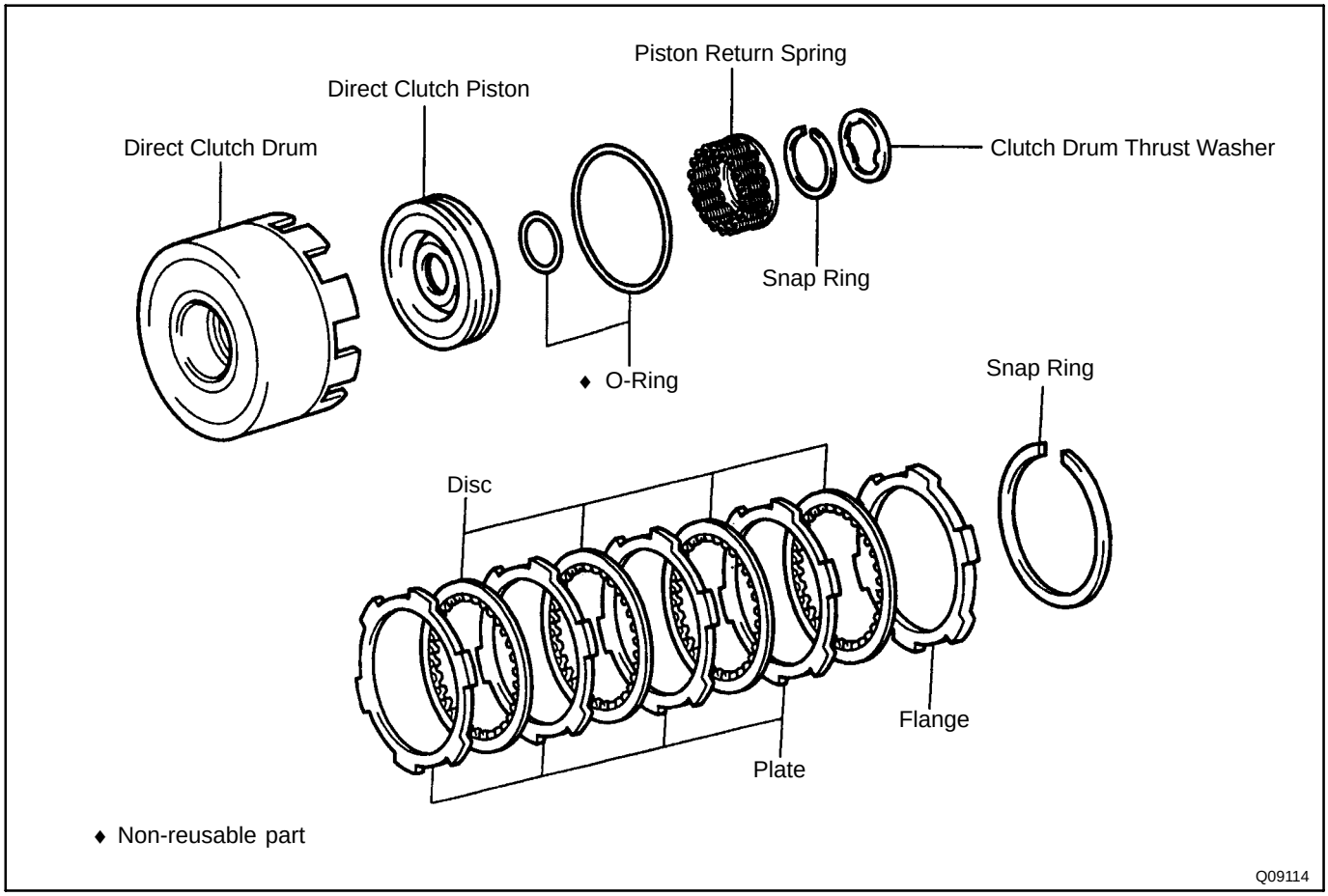

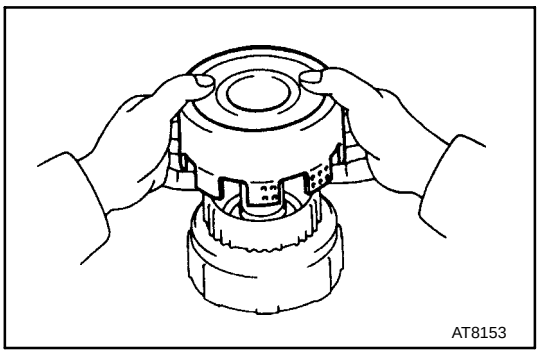

DIRECT CLUTCH DISASSEMBLY

1. **REMOVE DIRECT CLUTCH DRUM FROM FORWARD CLUTCH**
2. **REMOVE CLUTCH DRUM THRUST WASHER FROM DIRECT CLUTCH**

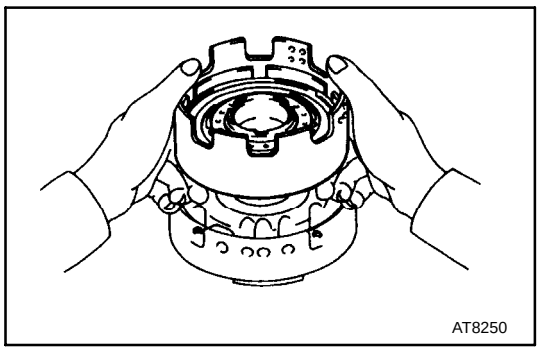

3. **CHECK PISTON STROKE OF DIRECT CLUTCH**
   (a) Place the direct clutch assembly onto the O/D support assembly.

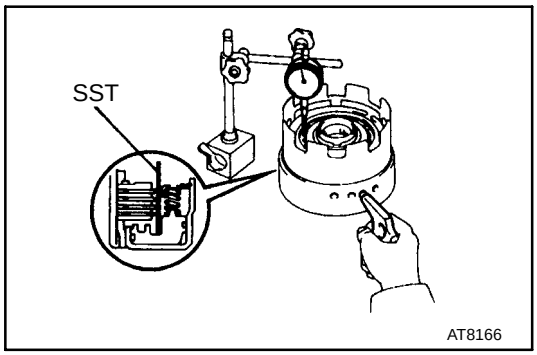

(b) Using SST and a dial indicator, measure the direct clutch piston stroke while applying and releasing compressed air (392 - 785 kPa, 4 - 8 kgf/cm^2, 57 - 114 psi).

SST 09350-30020 (09350-06120)

Piston stroke:

1.37 - 1.60 mm (0.0539 - 0.0630 in.)

If the values are non-standard, inspect the discs.

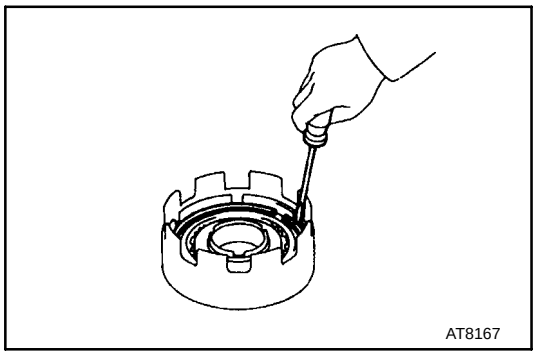

4. REMOVE FLANGE, PLATES AND DISCS

(a) Using a screwdriver, remove the snap ring from the direct clutch drum.

(b) Remove the flange, plates and discs.

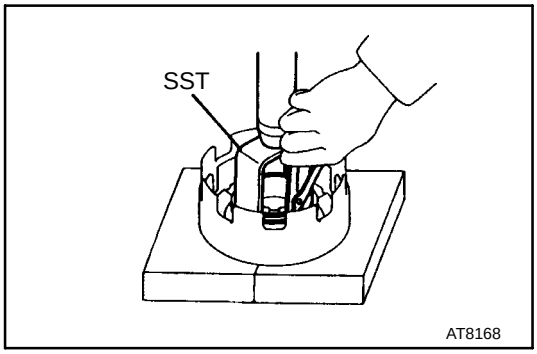

5. REMOVE PISTON RETURN SPRING

(a) Place SST on the spring retainer and compress the return spring with a press.

SST 09350-30020 (09350-07040)

(b) Using snap ring expander, remove the snap ring.

(c) Remove the piston return spring.

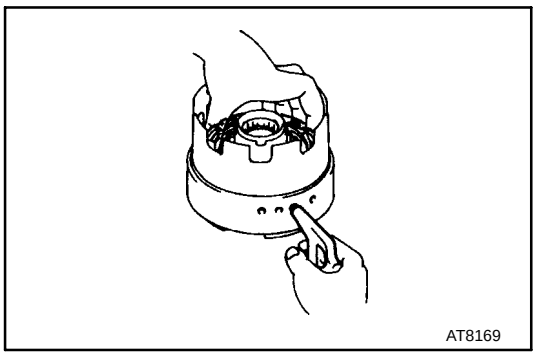

6. REMOVE DIRECT CLUTCH PISTON

(a) Place the direct clutch drum onto the O/D support.

(b) Hold the direct clutch piston, apply compressed air to the O/D support to remove the direct clutch piston.

(c) Remove the direct clutch piston.

(d) Remove the 2 O-rings from the piston.

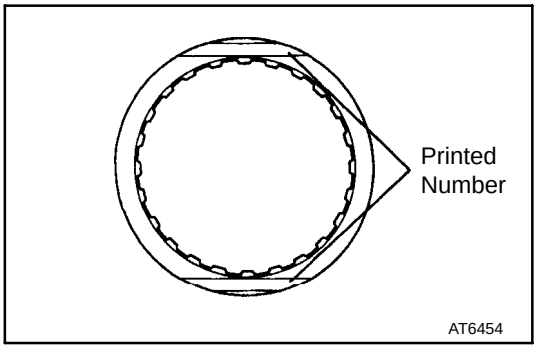

DIRECT CLUTCH INSPECTION

1. INSPECT DISC, PLATE AND FLANGE

Check to see if the sliding surface of the disc, plate and flange are worn or burnt. If necessary, replace them.

HINT: If the lining of the disc is peeling off or discolored, or even if a part of the printed numbers are defaced, replace all discs.

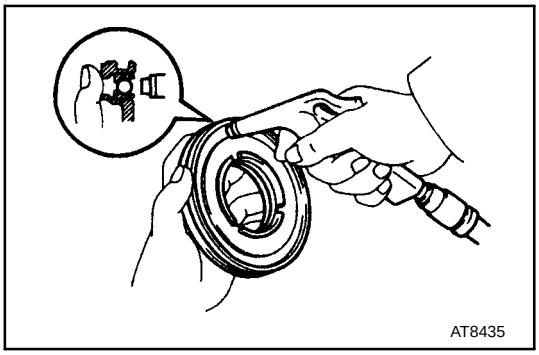

2. CHECK DIRECT CLUTCH PISTON

(a) Check that the check ball is free by shaking the piston.

(b) Check that the valve does not leak by applying low-pressure compressed air.

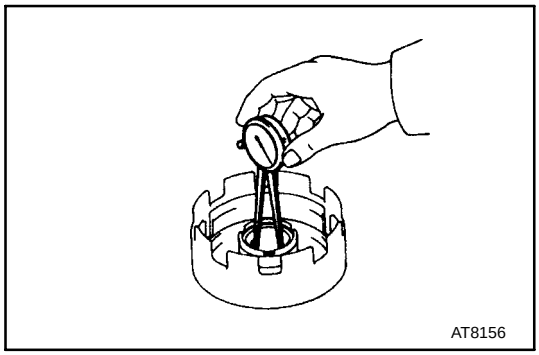

3. CHECK DIRECT CLUTCH DRUM BUSHING

Using a dial indicator, measure the inside diameter of the clutch drum bushing.
Maximum inside diameter:
53.99 mm (2.1256 in.)
If the inside diameter is greater than the maximum, replace the clutch drum.

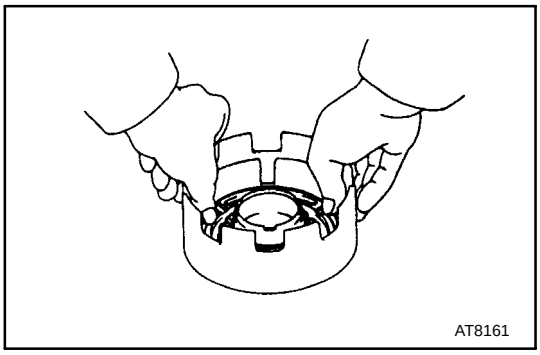

DIRECT CLUTCH ASSEMBLY

1. INSTALL DIRECT CLUTCH PISTON TO DIRECT CLUTCH DRUM

(a) Coat 2 new O-rings with ATF and install them on the direct clutch piston.

(b) Being careful not to damage the O-rings, press in the direct clutch piston into the clutch drum with both hands.

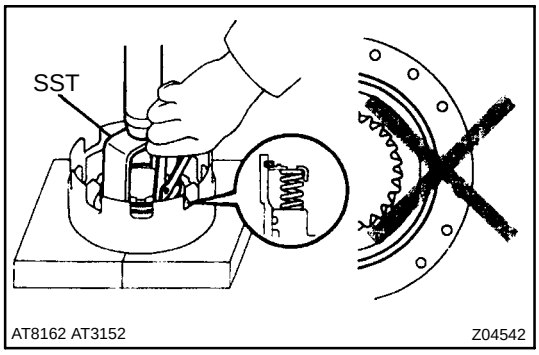

2. INSTALL PISTON RETURN SPRING

(a) Install the piston return spring.

(b) Place SST on the spring retainer, and compress the return spring with a press.

SST 09350-30020 (09350-07040)

(c) Install the snap ring with snap ring pliers. Be sure the end gap of the snap ring is not aligned with the spring retainer.

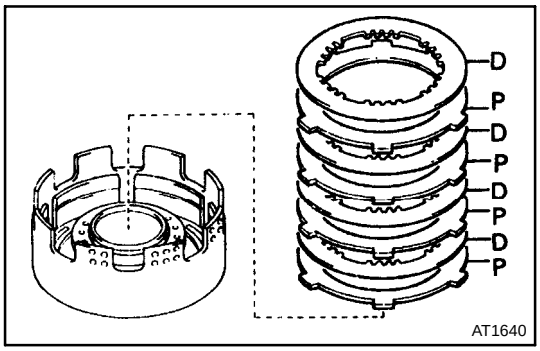

3. INSTALL PLATES. DISCS AND FLANGE

(a) Install the plates and discs.
Install in order: P = Plate D = Disc
P-D-P-D-P-D-P-D

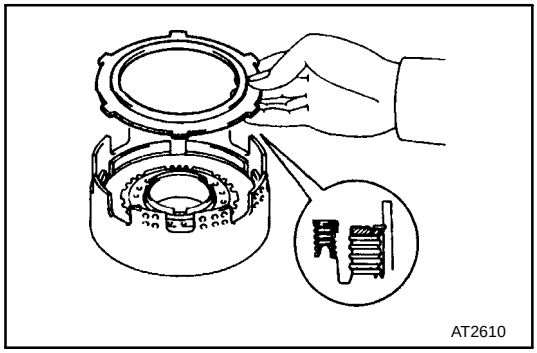

(b) Install the flange, the flat end facing downward.

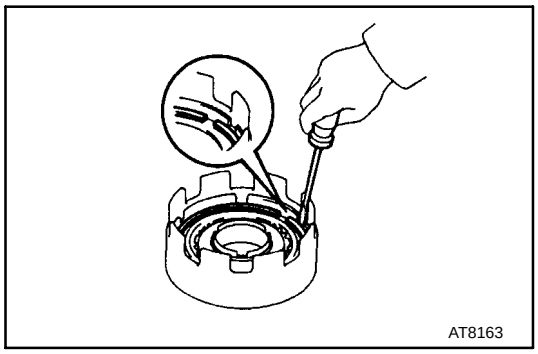

(c) Install the snap ring with a screwdriver. Be sure the end gap of the snap ring is not aligned with the cutout portion of the direct clutch drum.

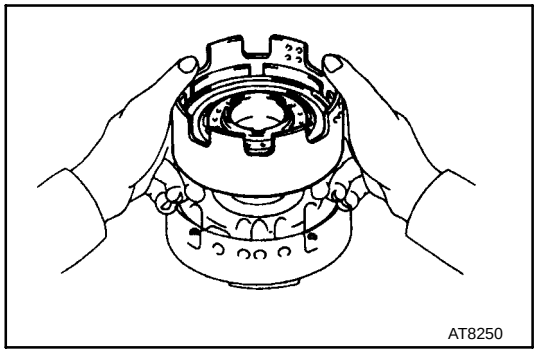

4. CHECK PISTON STROKE OF DIRECT CLUTCH

(a) Place the direct clutch assembly onto the O/D support assembly.

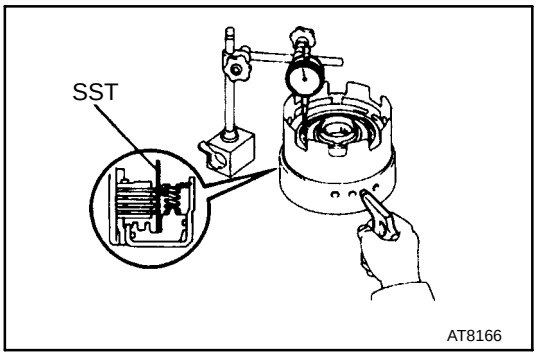

(b) Using SST and a dial indicator, measure the direct clutch piston stroke while applying and releasing compressed air (392 - 785 kPa, 4 - 8 kgf/cm^2, 57 - 114 psi).

SST 09350-30020 (09350-06120)

Piston stroke:

1.37 - 1.60 mm (0.0539 - 0.0630 in.)

If the piston stroke is less than the limit, parts may have been assembled incorrectly, so check and reassemble again.

If the piston stroke is non-standard, select another flange.

HINT: There are 8 different thicknesses for the flange.

Flange thickness

mm (in.)

No.	Thickness	No.	Thickness
33	3.0 (0.118)	29	3.4 (0.134)
32	3.1 (0.122)	28	3.5 (0.138)
31	3.2 (0.126)	27	3.6 (0.142)
30	3.3 (0.130)	34	3.7 (0.146)

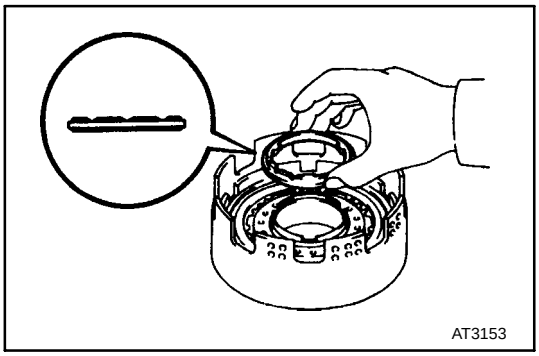

5. INSTALL CLUTCH DRUM THRUST WASHER

Coat the thrust washer with petroleum jelly and install it onto the direct clutch.

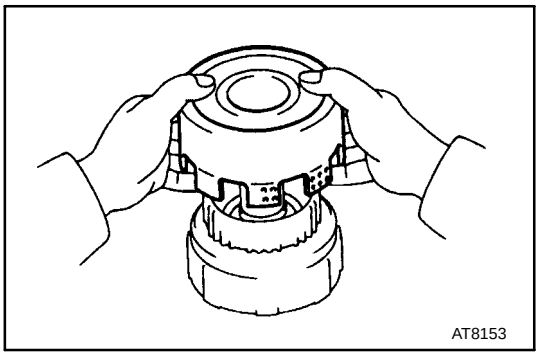

6. INSTALL DIRECT CLUTCH TO FORWARD CLUTCH

(a) Align the flukes of discs in the direct clutch.

(b) Install the direct clutch onto the forward clutch.

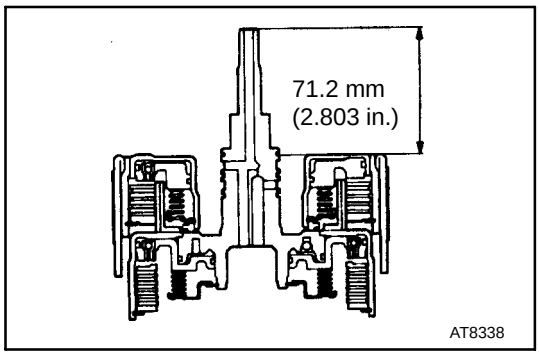

(c) Check that the distance from the direct clutch end to the forward clutch end is 71.2 mm (2.803 in.). If the distance is less than the above value, parts may have been assembled incorrectly, check and reassemble again.

FORWARD CLUTCH

COMPONENTS

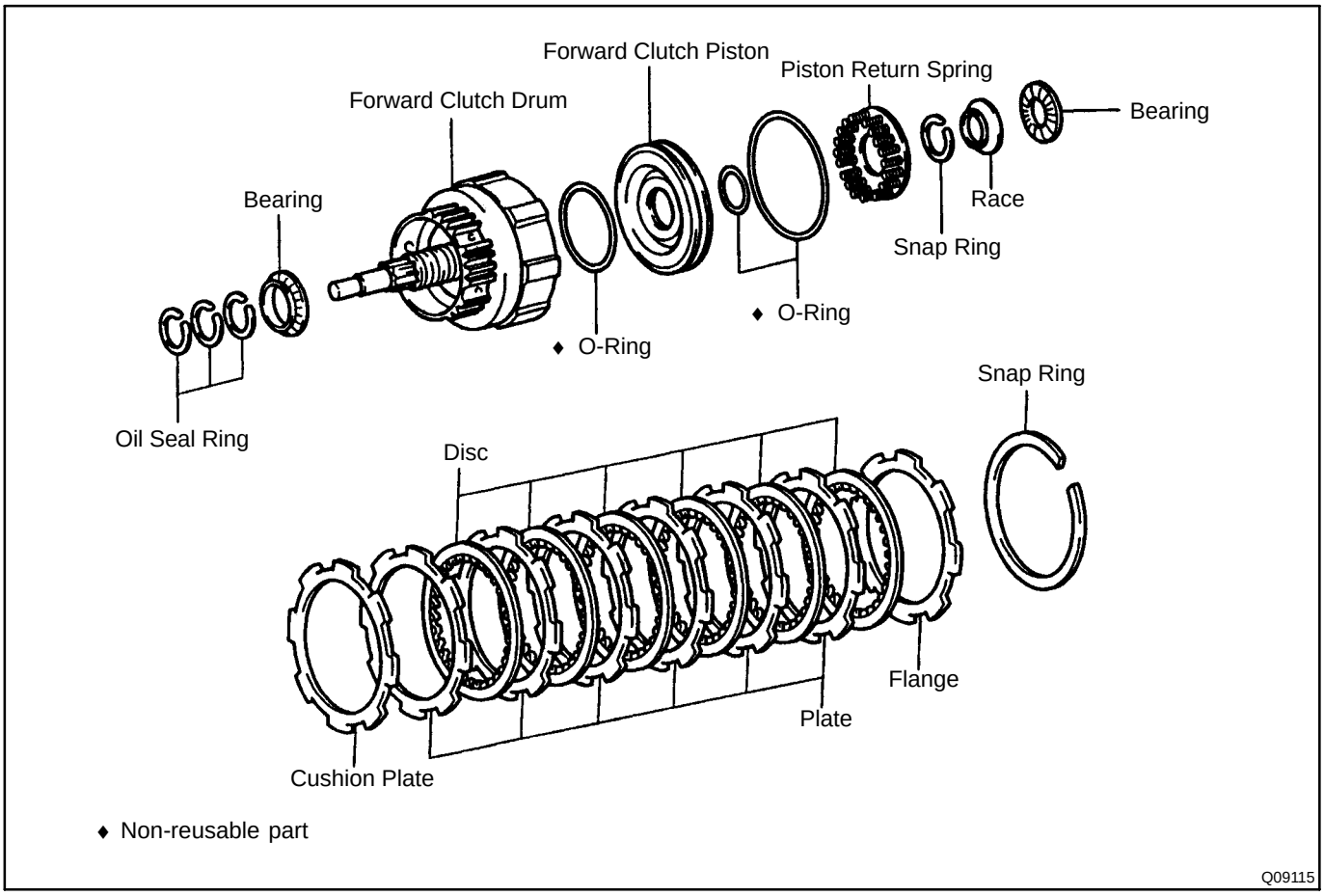

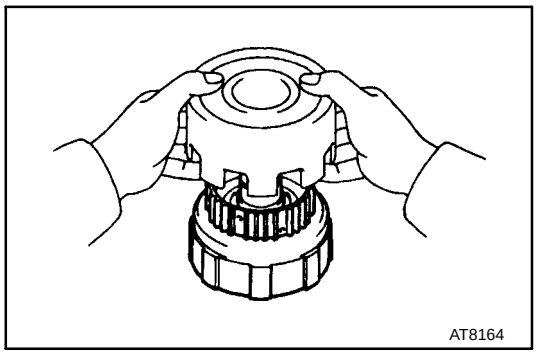

FORWARD CLUTCH DISASSEMBLY

1. REMOVE FORWARD CLUTCH FROM DIRECT CLUTCH

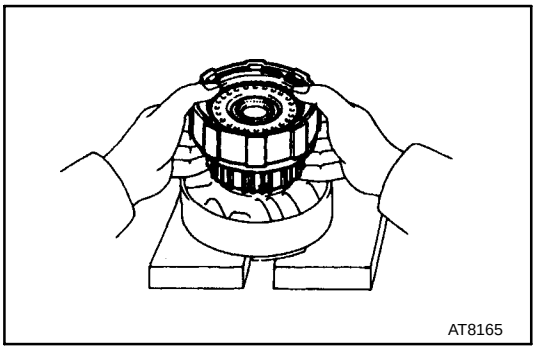

2. PLACE FORWARD CLUTCH ONTO OVERDRIVE SUPPORT

(a) Place wooden blocks or similar, to prevent forward clutch shaft from touching the work stand, and place the O/D support on them.

(b) Place the forward clutch onto the O/D support.

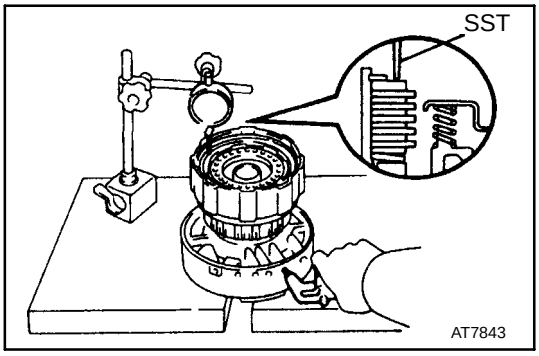

3. CHECK PACK CLEARANCE OF FORWARD CLUTCH

Using SST and a dial indicator, measure the forward clutch piston stroke while applying and releasing compressed air (392 - 785 kPa, 4 - 8 kgf/cm^2, 57 - 114 psi).

SST 09350-30020 (09350-06120)

Pack clearance:

0.60 - 1.00 mm (0.0236 - 0.0394 in.)

If the values are non-standard, inspect the discs.

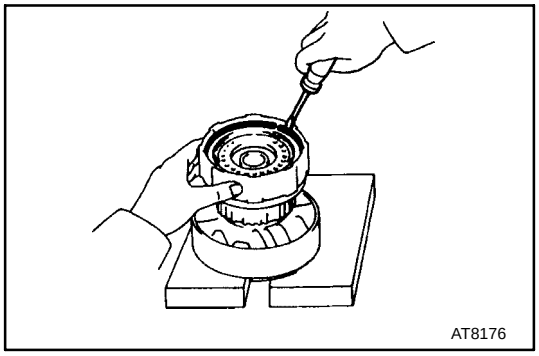

4. REMOVE FLANGE, PLATES AND DISCS

(a) Using a screwdriver, remove the snap ring from the forward clutch drum.

(b) Remove the flange, plates and discs.

5. REMOVE CUSHION PLATE

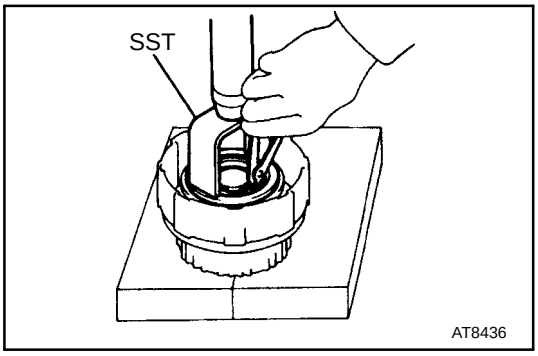

6. REMOVE PISTON RETURN SPRING

(a) Place SST on the spring retainer and compress the return spring with a press.

SST 09350-30020 (09350-07040)

(b) Using a snap ring expander, remove the snap ring.

(c) Remove the piston return spring.

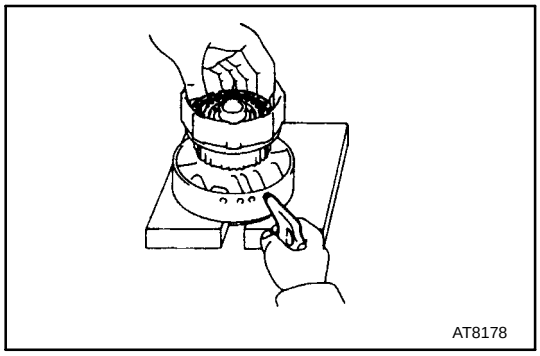

7. REMOVE FORWARD CLUTCH PISTON

(a) Place the forward clutch drum onto the O/D support.

(b) Hold the forward clutch piston with hand, apply compressed air to the O/D support to remove the forward clutch piston.

(c) Remove the forward clutch piston.

(d) Remove the 2 O-rings from the piston.

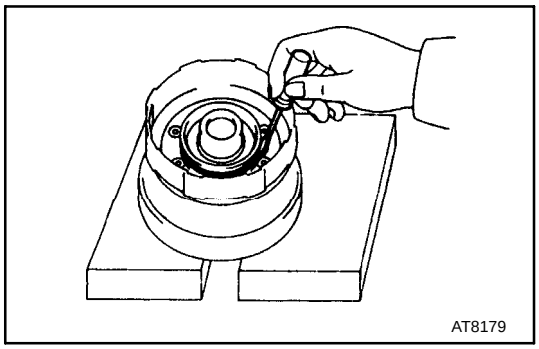

8. REMOVE O-RING FROM FORWARD CLUTCH DRUM

9. REMOVE 3 OIL SEAL RINGS

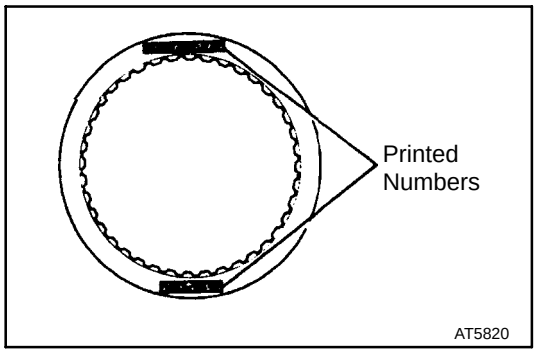

FORWARD CLUTCH INSPECTION

1. INSPECT DISC, PLATE AND FLANGE

Check to see if the sliding surface of the disc, plate and flange are worn or burnt. If necessary, replace them.

HINT: If the lining of the disc is peeling off or discolored, or even if a part of the printed numbers are defaced, replace all discs.

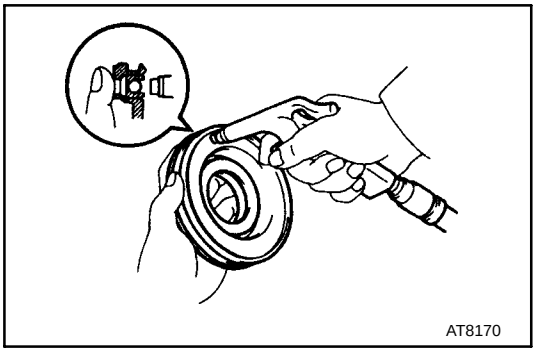

2. CHECK FORWARD CLUTCH PISTON

(a) Check that the check ball is free by shaking the piston.

(b) Check that the valve does not leak by applying low-pressure compressed air.

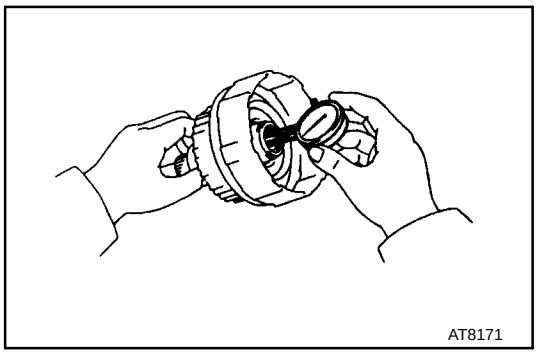

3. CHECK FORWARD CLUTCH DRUM BUSHING

Using a dial indicator, measure the inside diameter of the forward clutch drum bushing.

Maximum inside diameter: 24.08 mm (0.9480 in.)

If the inside diameter is greater than the maximum, replace the forward clutch drum.

FORWARD CLUTCH ASSEMBLY

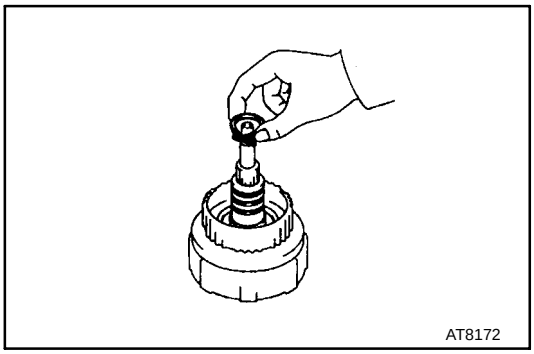

1. INSTALL OIL SEAL RINGS

(a) Coat 3 oil seal rings with ATF.

(b) Install the 3 oil seal rings to the forward clutch drum groove, then settle them down by squeezing their ends together.

NOTICE: Do not squeeze the ring ends more than necessary.

HINT: After installing the oil seal rings, check that they rotate smoothly.

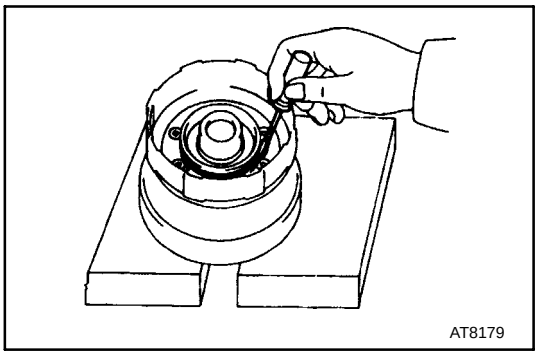

2. INSTALL NEW O-RING TO FORWARD CLUTCH DRUM

Coat a new O-ring with ATF and install it on the forward clutch drum.

3. INSTALL FORWARD CLUTCH PISTON

(a) Coat new O-rings with ATF and install them on the forward clutch piston with a screwdriver.

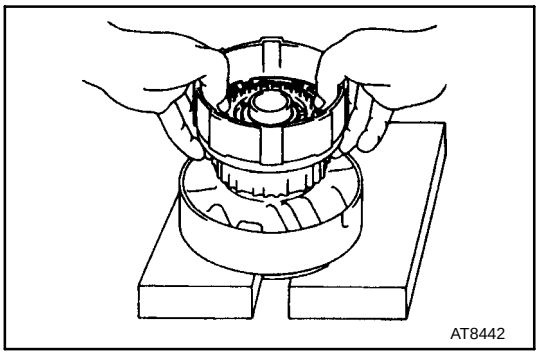

(b) Being careful not to damage the O-rings, press the clutch piston into the forward clutch drum with both hands.

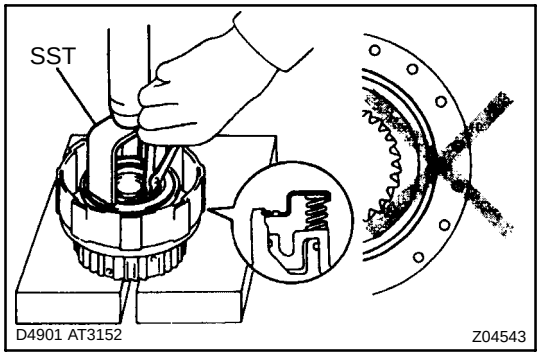

4. INSTALL PISTON RETURN SPRING

(a) Install the piston return spring.

(b) Place SST on the spring retainer, and compress the return spring with a press.

SST 09350-30020 (09350-07040)

(c) Install the snap ring with a snap ring expander. Be sure the end gap of the snap ring is not aligned with the spring retainer claw.

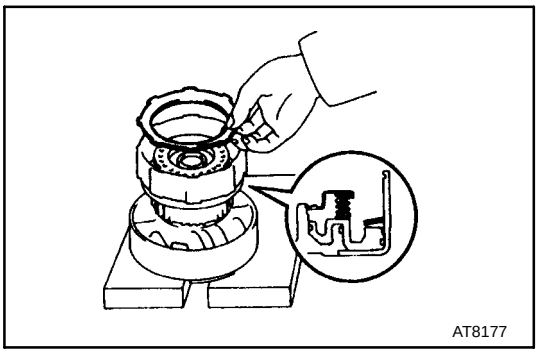

5. INSTALL CUSHION PLATE ROUNDED END DOWN, AS SHOWN

6. INSTALL PLATES, DISCS AND FLANGE

(a) Install in order: P = Plate D = Disc
P-D-P-D-P-D-P-D-P-D-P-D

(b) And then install the flange, the rounded edge facing downward.

HINT: There are 8 different thicknesses for the flange.

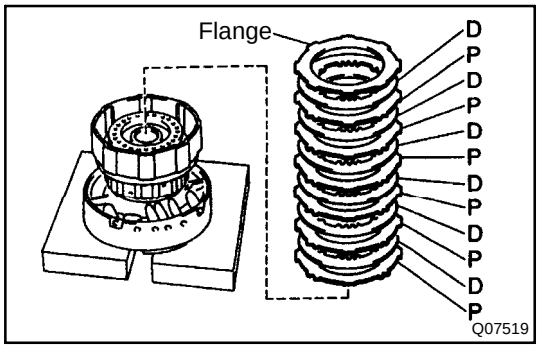

Flange thickness mm (in.)

No.	Thickness	No.	Thickness
61	3.0 (0.118)	44	3.8 (0.150)
60	3.2 (0.126)	42	4.0 (0.157)
45	3.4 (0.134)	63	4.2 (0.165)
62	3.6 (0.142)	64	4.4 (0.173)

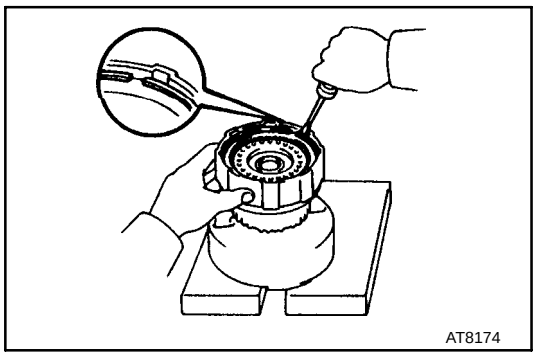

(c) Install the snap ring with a screwdriver. Be sure the end gap of the snap ring is not aligned with the cutout portion of the forward clutch drum.

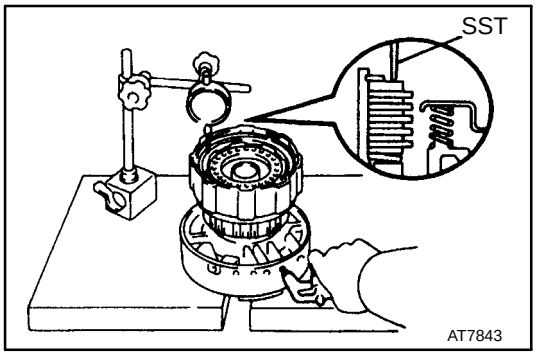

7. CHECK PACK CLEARANCE OF FORWARD CLUTCH

Using SST and a dial indicator, measure the forward clutch piston stroke while applying and releasing compressed air (392 - 785 kPa, 4 - 8 kgf/cm^2, 57 - 114 psi).

SST 09350-30020 (09350-06120)

Pack clearance:

0.60 - 1.00 mm (0.0236 - 0.0394 in.)

If the values are non-standard, inspect the discs.

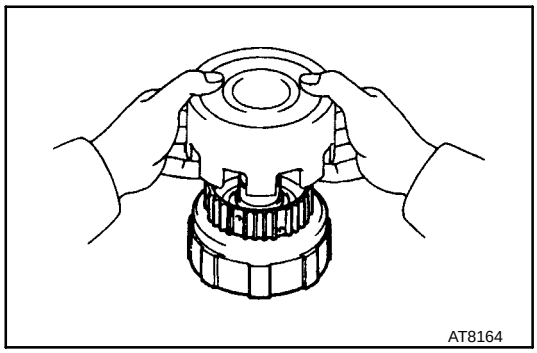

8. INSTALL DIRECT CLUTCH TO FORWARD CLUTCH

(a) Make sure that the thrust washer is installed to the direct clutch drum.

(b) Align the flukes of discs in the direct clutch.

(c) Install the direct clutch onto the forward clutch.

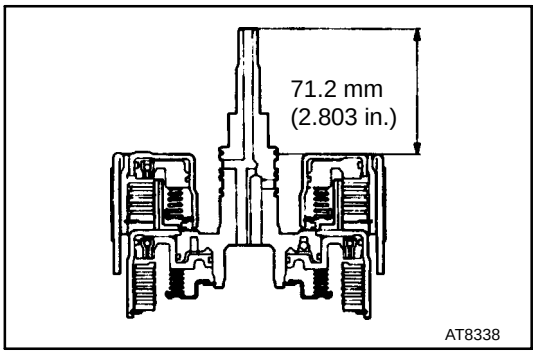

(d) Check that the distance from the direct clutch end to the forward clutch end is 71.2 mm (2.803 in.). If the distance is less than the above value, parts may have been assembled incorrectly, check and reassemble again.

SECOND COAST BRAKE

COMPONENTS

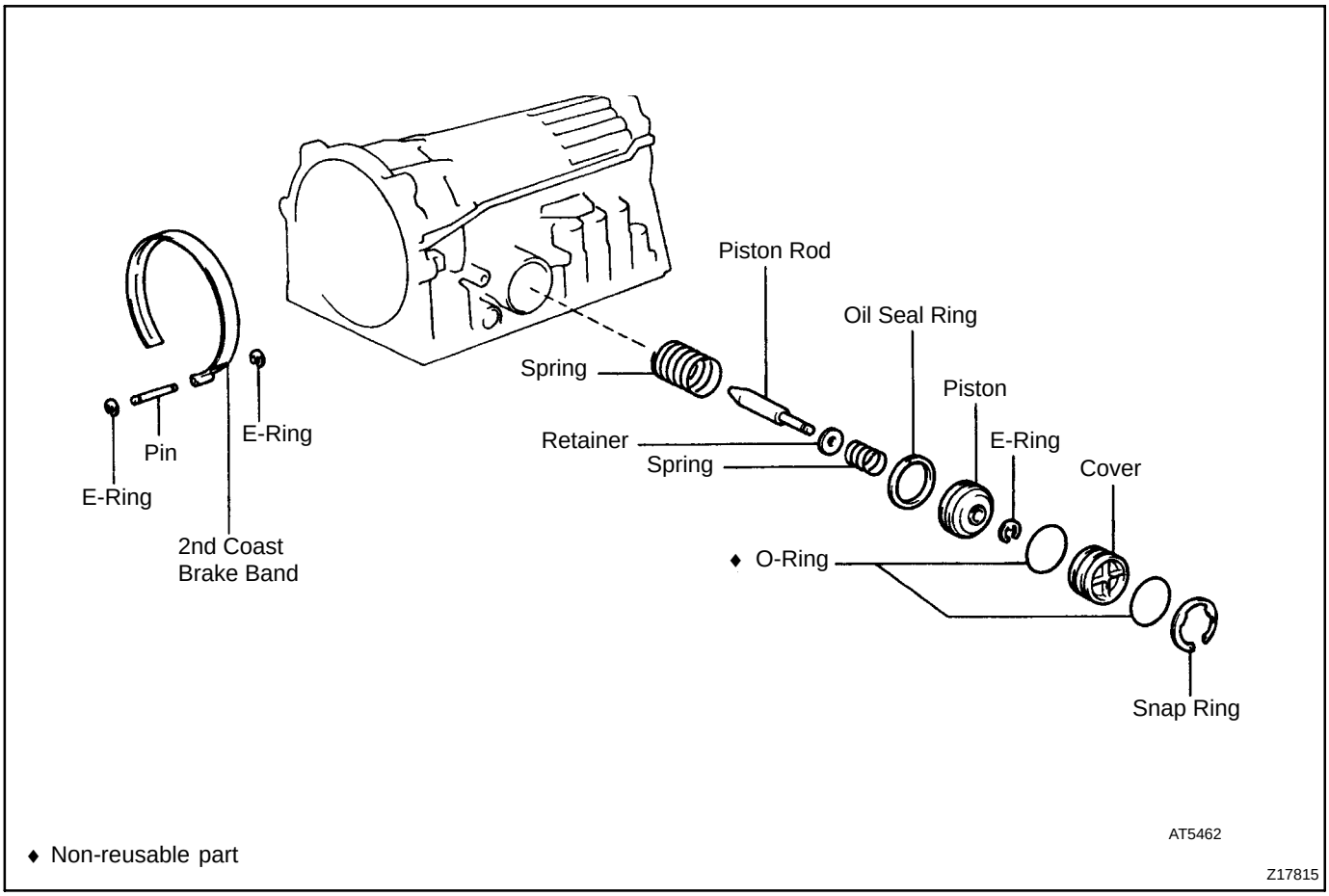

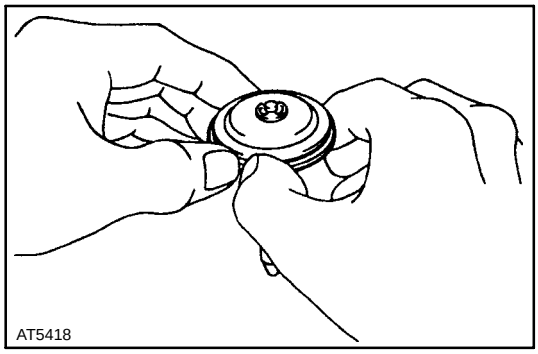

2ND COAST BRAKE DISASSEMBLY

1. REMOVE 2ND COAST BRAKE PISTON OIL SEAL RING

Remove the oil seal ring from the piston.

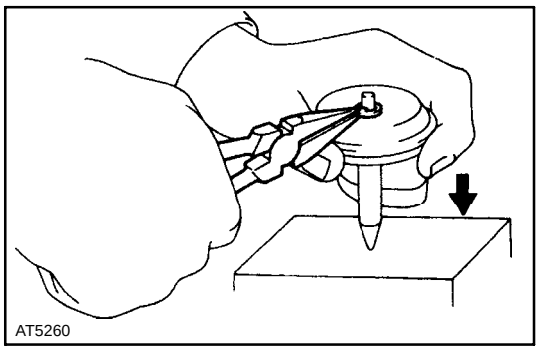

2. REMOVE 2ND COAST BRAKE PISTON ROD

(a) Firmly hold down the piston, then compress the compression spring.

(b) Using needle nose-pliers, remove the E-ring.

(c) Remove the compression spring, retainer and piston rod.

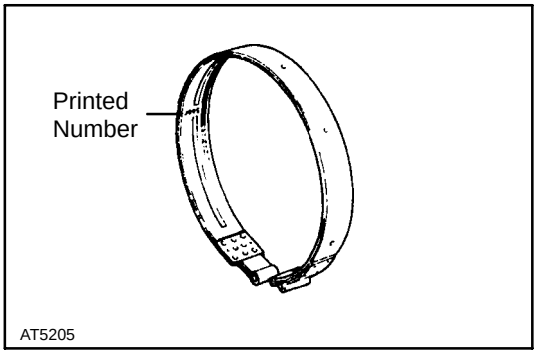

2ND COAST BRAKE BAND INSPECTION

INSPECT BRAKE BAND

If the lining of the brake band is peeling off or discolored, or even part of the printed numbers are defaced, replace the brake band.

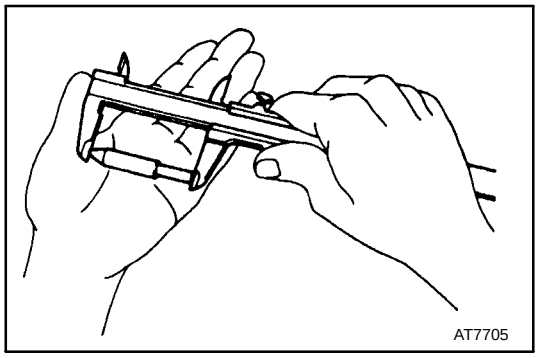

2ND COAST BRAKE PISTON ASSEMBLY

1. SELECT PISTON ROD

If the band is OK with piston stroke not within the standard value, select a new piston rod.
There are 2 different lengths of piston rod.
Piston rod length:
71.4 mm (2.811 in.)
72.9 mm (2.870 in.)

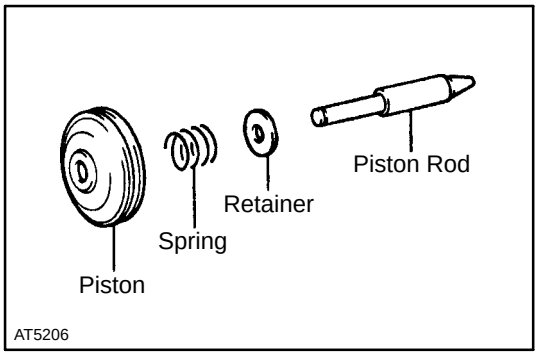

2. INSTALL PISTON ROD

(a) Install the retainer, compression spring and piston to the piston rod.

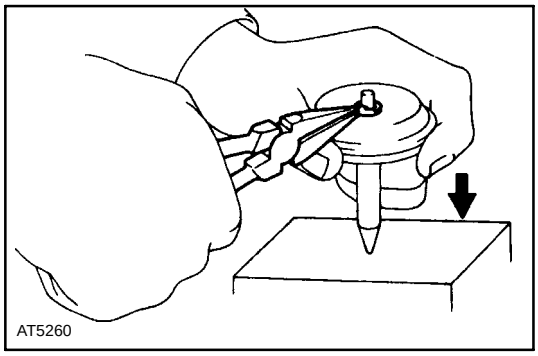

(b) Firmly hold down the piston, then compress the compression spring.

(c) Using needle-nose pliers, install the E-ring.

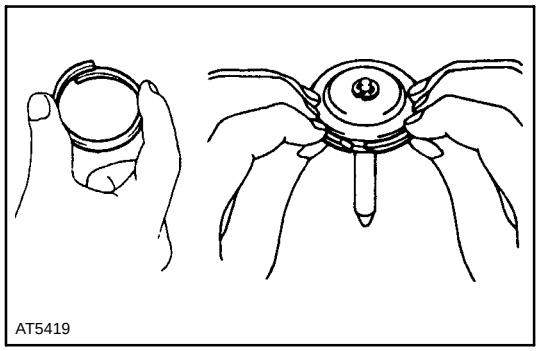

3. INSTALL 2ND COAST BRAKE PISTON OIL SEAL RING

(a) Coat an oil seal ring with ATF.

(b) Install the oil seal ring to the piston groove, then snug it down by squeezing its ends together.

NOTICE: Do not spread the ring ends more than necessary.

FRONT PLANETARY GEAR

COMPONENTS

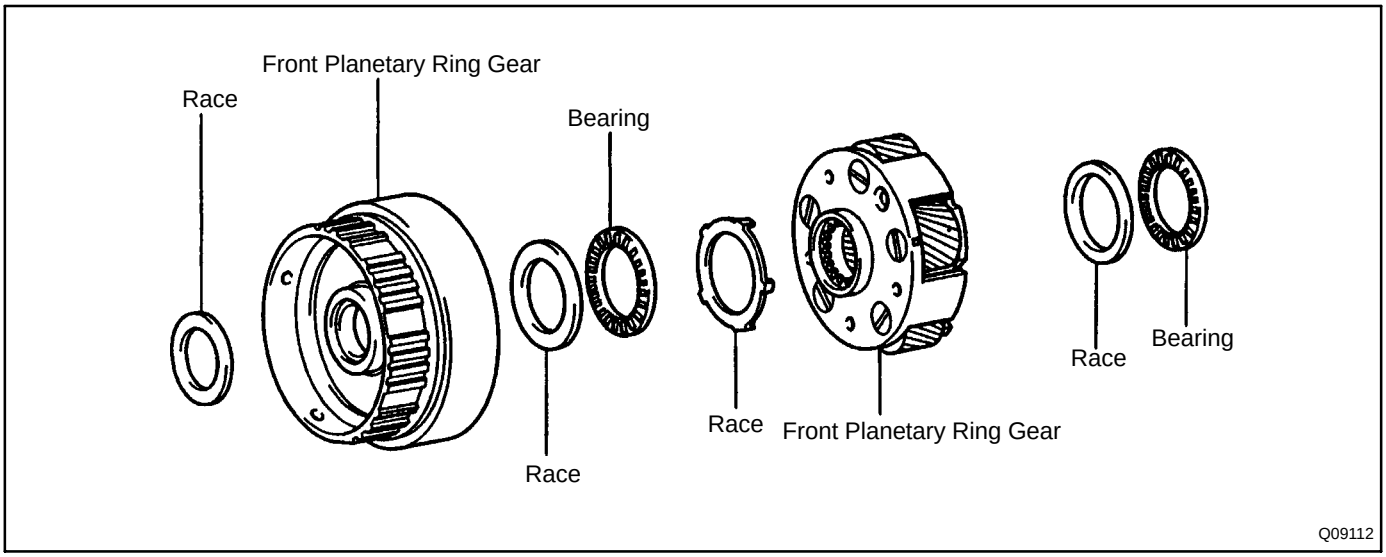

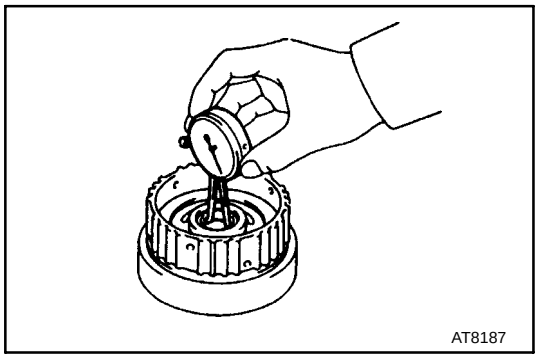

FRONT PLANETARY GEAR INSPECTION

1. CHECK FRONT PLANETARY RING GEAR BUSHING

Using a dial indicator, measure the inside diameter of the planetary ring gear bushing.

Maximum inside diameter: 24.08 mm (0.9480 in.)

If the inside diameter is greater than the maximum, replace the planetary ring gear.

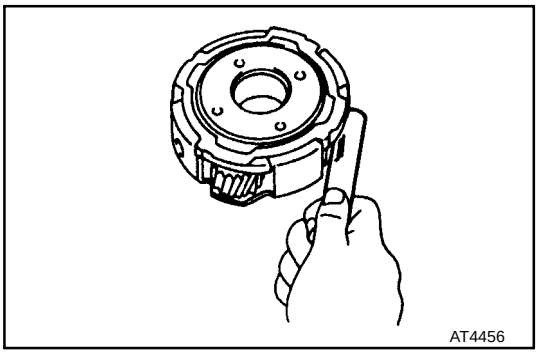

2. MEASURE PLANETARY PINION GEAR THRUST CLEARANCE

Using a feeler gauge, measure the planetary pinion gear thrust clearance.

Standard clearance:

0.20 - 0.60 mm (0.0079 - 0.0236 in.)

Maximum clearance: 1.00 mm (0.0394 in.)

If the clearance is greater than the maximum, replace the planetary gear assembly.

PLANETARY SUN GEAR

COMPONENTS

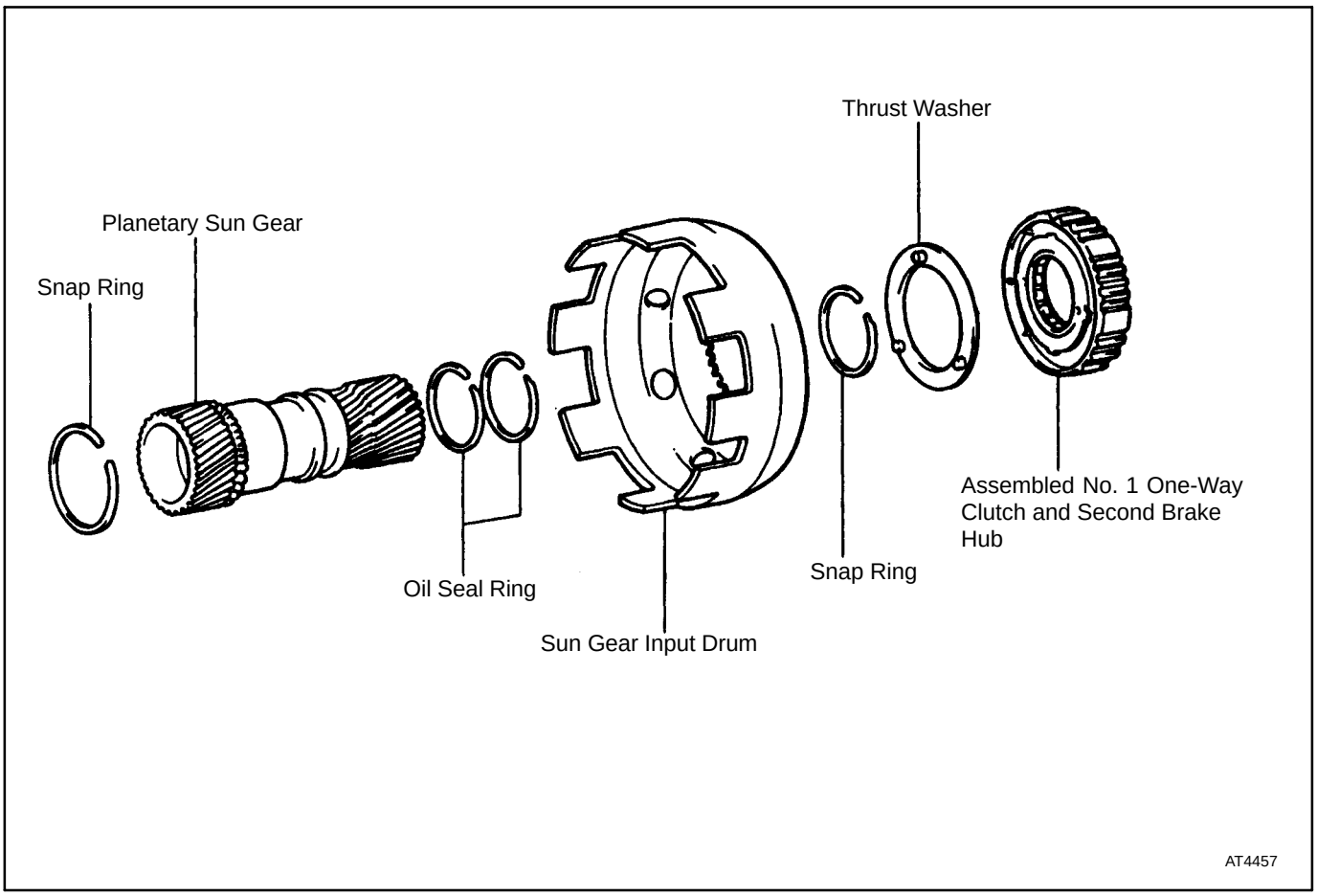

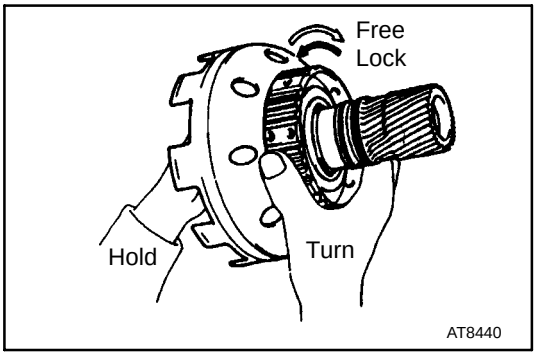

PLANETARY SUN GEAR AND NO. 1 ONE-WAY CLUTCH DISASSEMBLY

1. **CHECK OPERATION OF NO. 1 ONE-WAY CLUTCH**
   Hold the planetary sun gear and turn the 2nd brake hub. Check that the 2nd brake hub must be able to turn freely clockwise and locks counterclockwise.

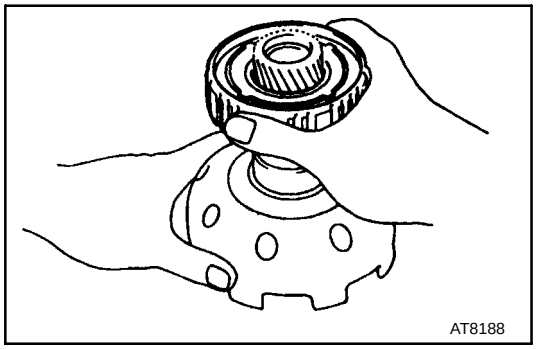

2. **REMOVE ASSEMBLED NO. 1 ONE-WAY CLUTCH AND 2ND BRAKE HUB**
3. **REMOVE THRUST WASHER FROM SUN GEAR INPUT DRUM**
4. **REMOVE 2 OIL SEAL RINGS**

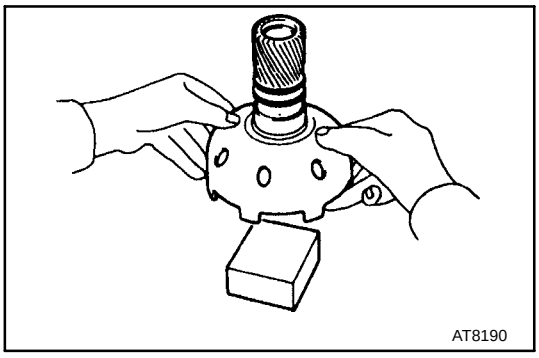

5. REMOVE SUN GEAR INPUT DRUM FROM PLANETARY SUN GEAR

(a) Use a wooden block or similar, as work stand.

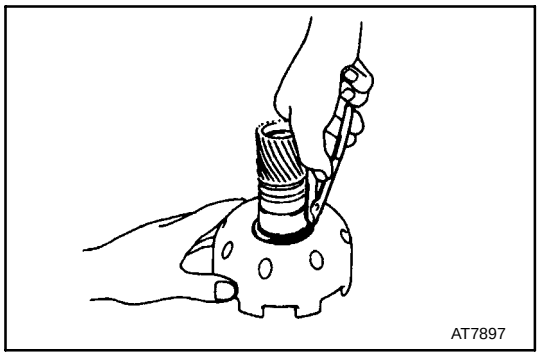

(b) Using snap ring pliers, remove the snap ring.

(c) Remove the sun gear input drum from the planetary sun gear.

6. REMOVE SNAP RING FROM PLANETARY SUN GEAR

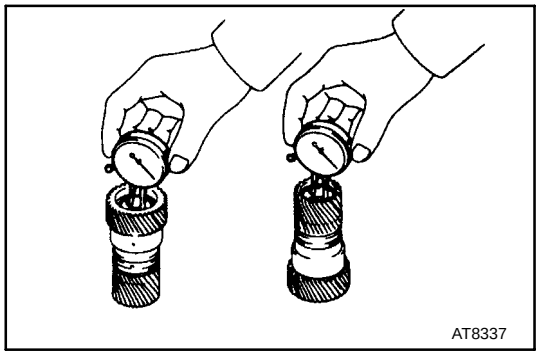

PLANETARY SUN GEAR INSPECTION

CHECK PLANETARY SUN GEAR BUSHINGS
Using a dial indicator, measure the inside diameter of the planetary sun gear bushings.
Maximum inside diameter: 27.08 mm (1.0661 in.)
If the inside diameter is greater than the maximum, replace the planetary sun gear.

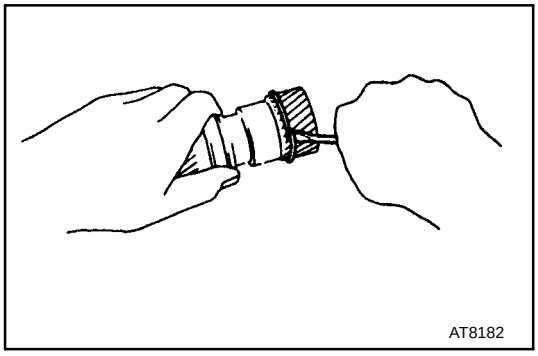

PLANETARY SUN GEAR AND NO. 1 ONE-WAY CLUTCH ASSEMBLY

1. INSTALL SNAP RING TO PLANETARY SUN GEAR

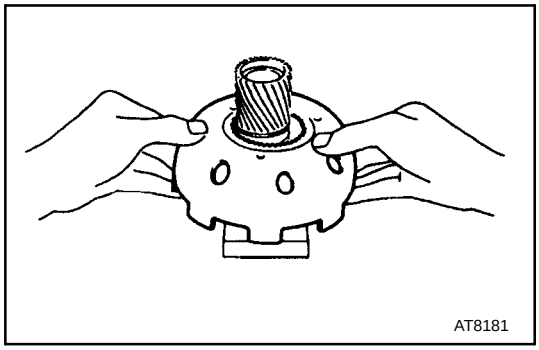

2. INSTALL SUN GEAR INPUT DRUM

(a) Place a wooden block or similar, as a work stand and place the planetary sun gear onto it.

(b) Install the sun gear input drum onto the planetary sun gear.

(c) Install the snap ring with snap ring plies.

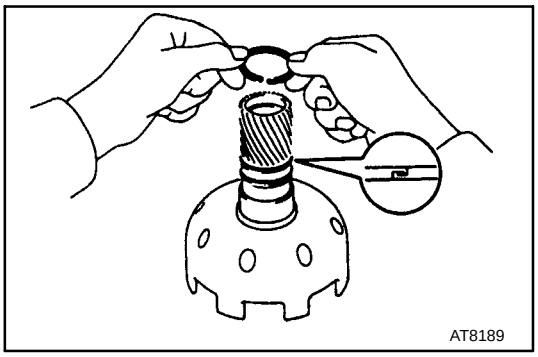

3. INSTALL OIL SEAL RINGS

(a) Coat 2 oil seal rings with ATF.

(b) Install the 2 oil seal rings onto the planetary sun gear.

NOTICE: Do not spread the ring ends too much.
HINT: After installing the oil seal rings, check that they rotate smoothly.

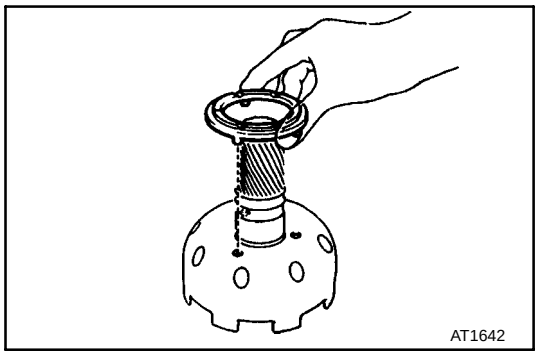

4. INSTALL THRUST WASHER

HINT: Make sure that the lug shapes match the holes on the sun gear input drum.

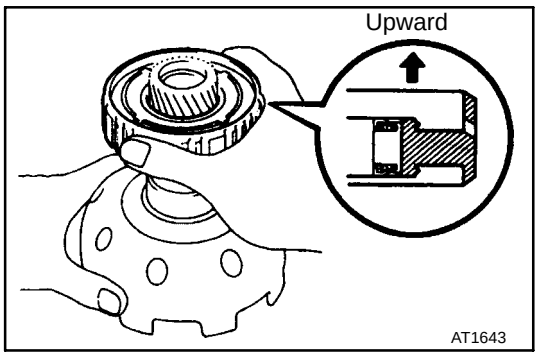

5. INSTALL ASSEMBLED NO. 1 ONE-WAY CLUTCH AND 2ND BRAKE HUB ONTO PLANETARY SUN GEAR

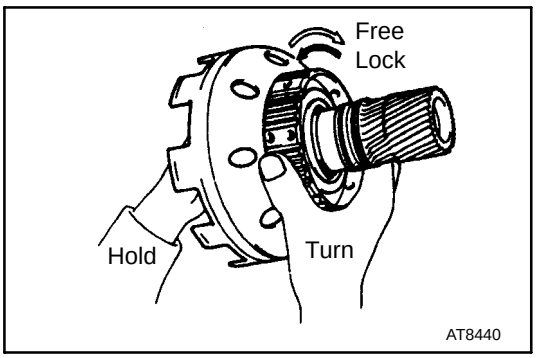

6. CHECK OPERATION OF NO. 1 ONE-WAY CLUTCH

Hold the planetary sun gear and turn the 2nd brake hub. Check that the 2nd brake hub must be able to turn freely clockwise and locks counterclockwise.

SECOND BRAKE

COMPONENTS

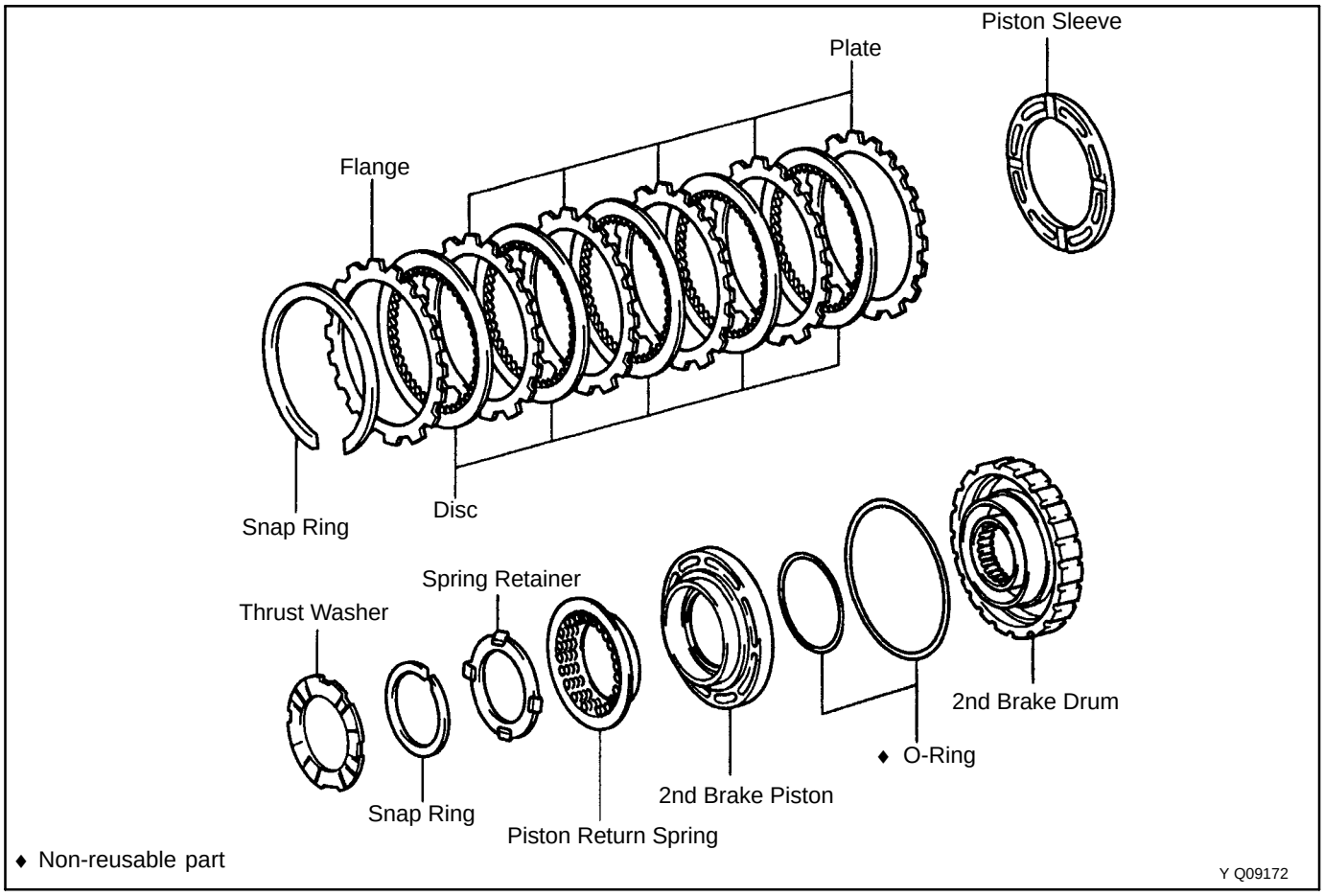

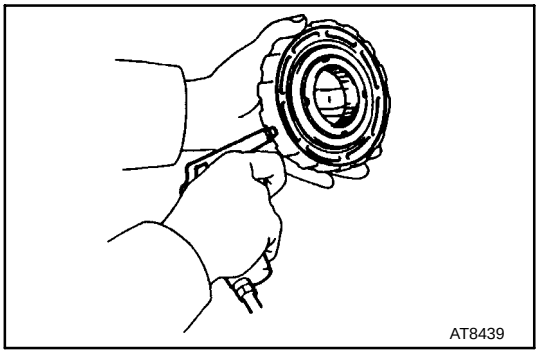

2ND BRAKE DISASSEMBLY

1. REMOVE THRUST WASHER FROM SECOND BRAKE DRUM

2. CHECK 2ND BRAKE PISTON MOVEMENT

Make sure the 2nd brake piston moves smoothly when applying and releasing low-pressure compressed air to the 2nd brake drum.

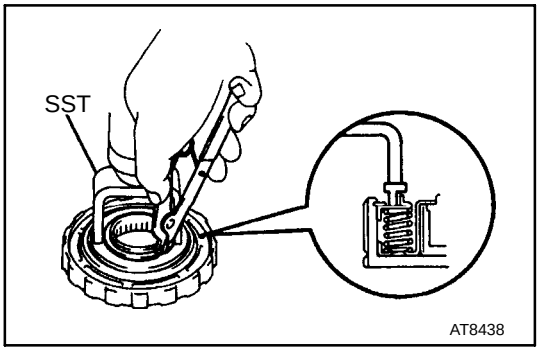

3. REMOVE PISTON RETURN SPRING

(a) Place SST on the spring retainer, and compress the return spring with a press.

SST 09350-30020 (09350-07040)

(b) Using snap ring pliers, remove the snap ring.

(c) Remove the spring retainer.

(d) Remove the piston return spring.

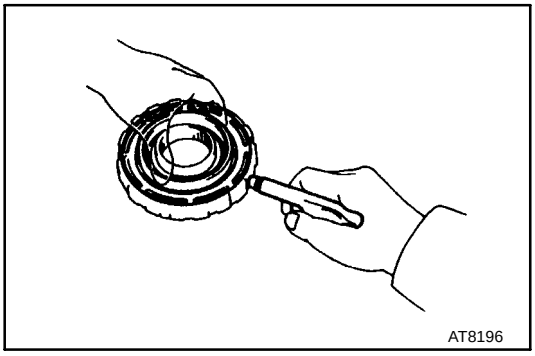

4. REMOVE 2ND BRAKE PISTON

(a) Hold the 2nd brake piston with hand, apply compressed air to the 2nd brake drum to remove the 2nd brake piston.

(b) Remove the 2nd brake piston.

HINT: If the piston is at an angle and cannot be removed, press down on the side jutting out and again apply compressed air, or else wind vinyl tape around the piston end and remove it with needle-nose pliers.

(c) Remove the 2 O-rings from the piston.

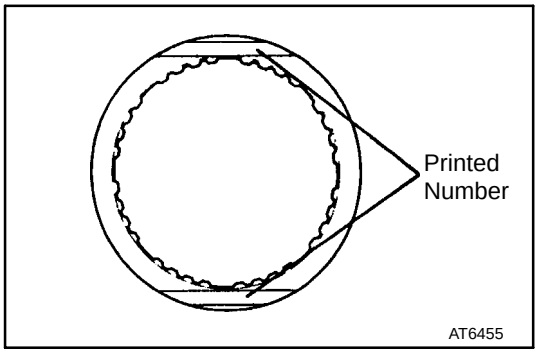

2ND BRAKE INSPECTION

INSPECT DISC, PLATE AND FLANGE

Check to see if the sliding surface of the disc, plate and flange are worn or burnt. If necessary, replace them.

HINT: If the lining of the disc is peeling off or discolored, or even if a part of the printed numbers are defaced, replace all discs.

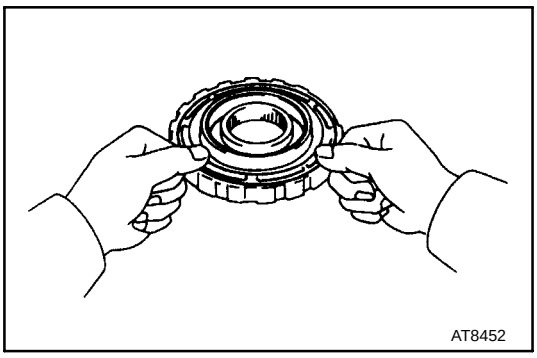

2ND BRAKE ASSEMBLY

1. INSTALL 2ND BRAKE PISTON

(a) Coat 2 new O-rings with ATF and install them on 2nd brake piston.

(b) Being careful not to damage the O-rings, press the 2nd brake piston into the 2nd brake drum with both hands.

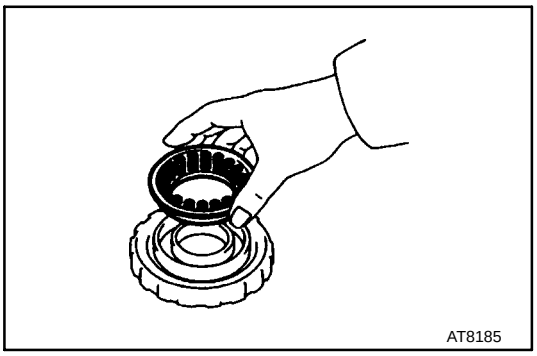

2. INSTALL PISTON RETURN SPRING

(a) Install the piston return spring.

(b) Install the spring retainer.

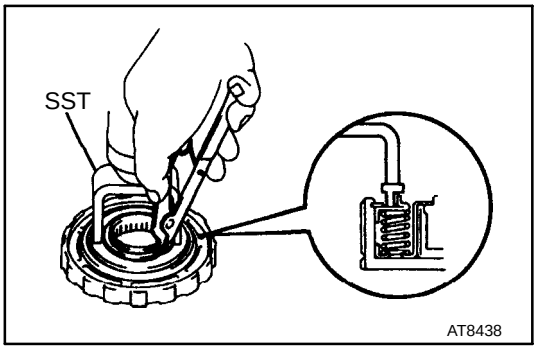

(c) Place SST on the spring retainer, and compress the return spring with a press.

SST 09350-30020 (09350-07040)

(d) Using snap ring pliers, install the snap ring.

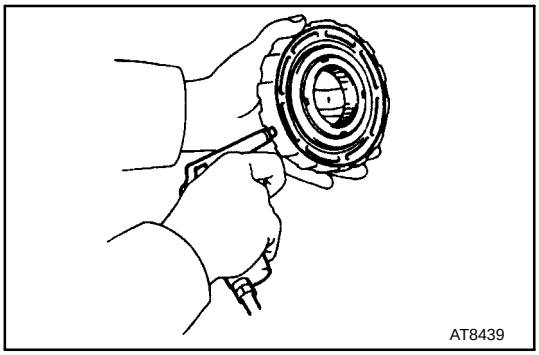

3. CHECK 2ND BRAKE PISTON MOVEMENT

Make sure the 2nd brake piston moves smoothly when applying and releasing low-pressure compressed air to the 2nd brake drum.

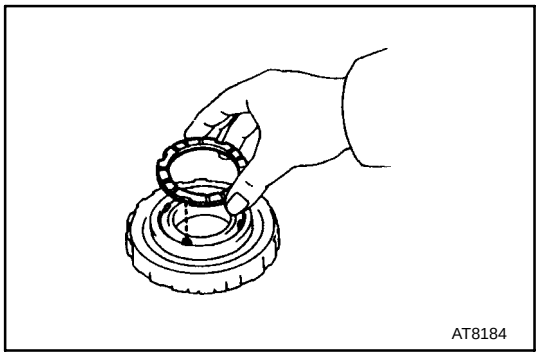

4. INSTALL THRUST WASHER

Coat the thrust washer with petroleum jelly and install it.

HINT: Make sure that the cutout portions of thrust washer match teeth of the spring retainer.

FIRST AND REVERSE BRAKE

COMPONENTS

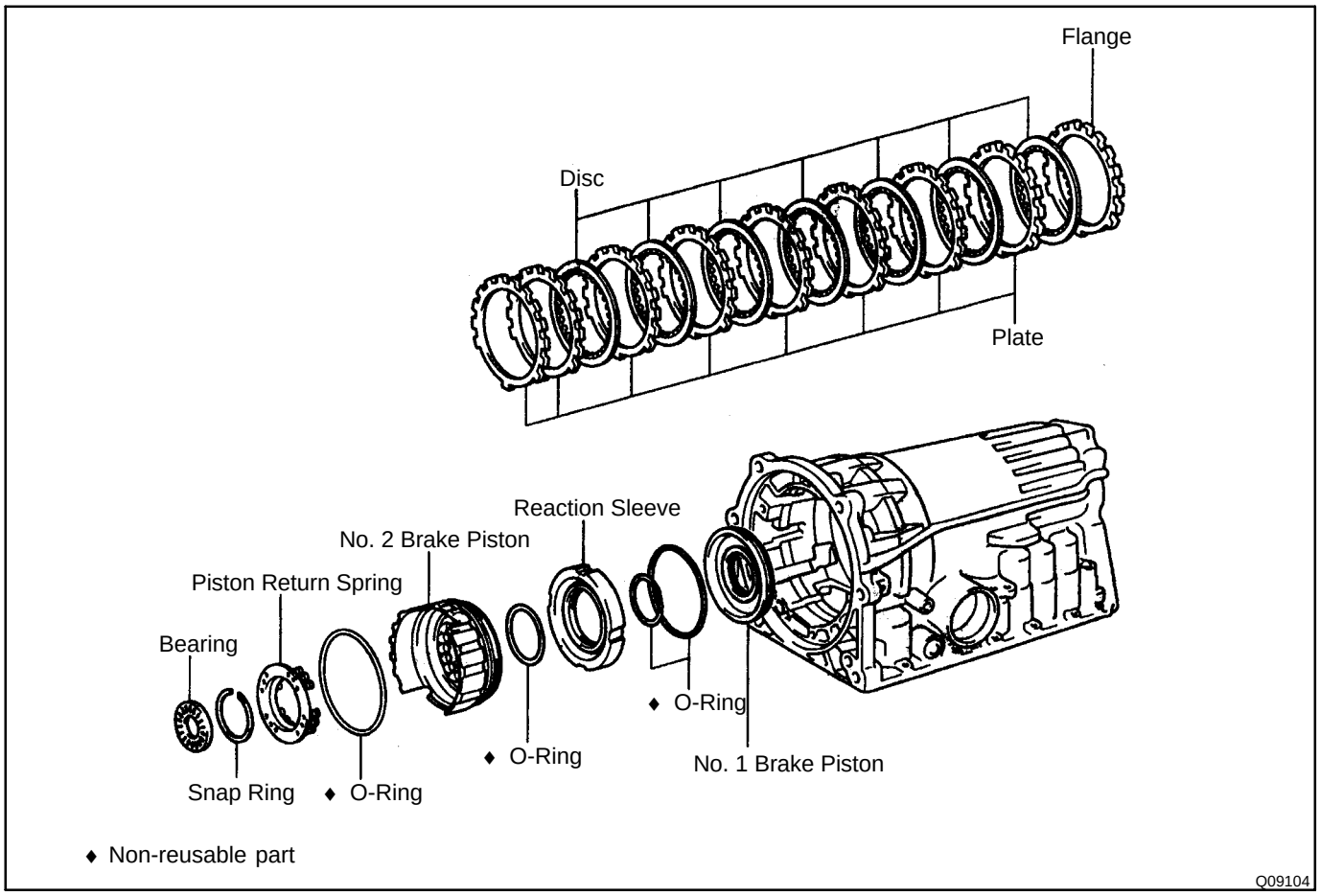

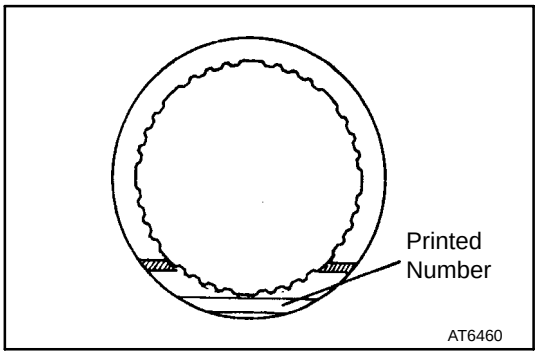

1ST AND REVERSE BRAKE INSPECTION

INSPECT DISC, PLATE AND FLANGE

Check to see if the sliding surface of the disc, plate and flange are worn or burnt. If necessary, replace them.
HINT: If the lining of the disc is peeling off or discolored, or even if a part of the printed numbers are defaced, replace all discs.

REAR PLANETARY GEAR

COMPONENTS

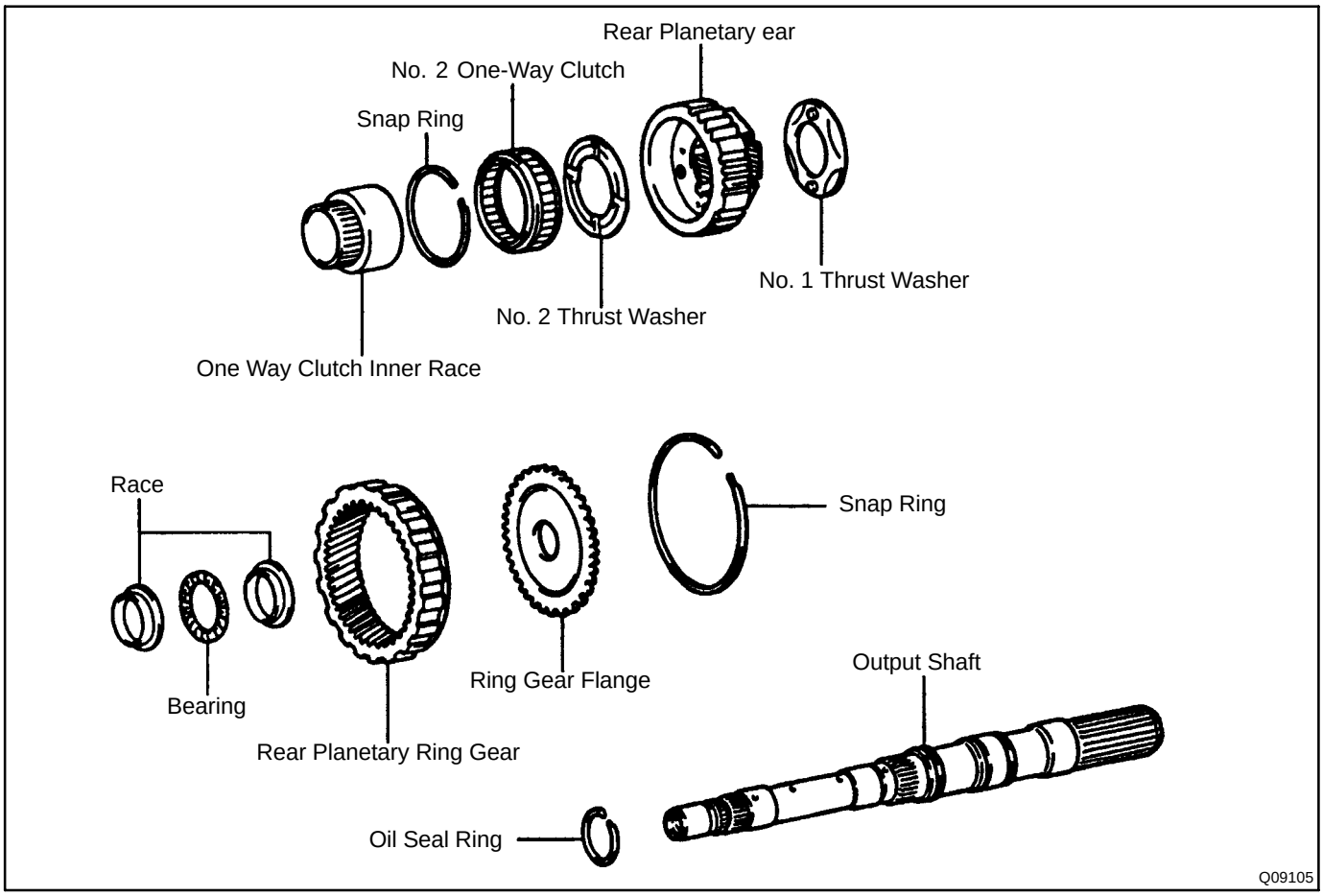

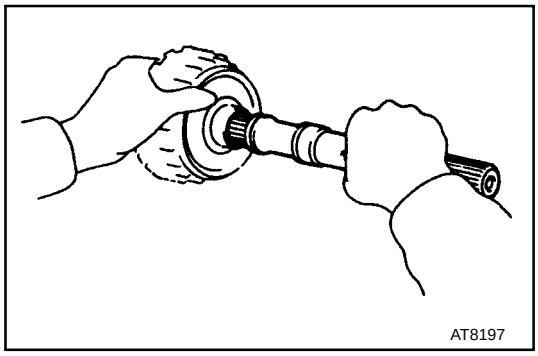

REAR PLANETARY GEAR, NO. 2 ONE-WAY CLUTCH AND OUTPUT SHAFT DISASSEMBLY

1. **REMOVE OUTPUT SHAFT FROM REAR PLANETARY GEAR ASSEMBLY**

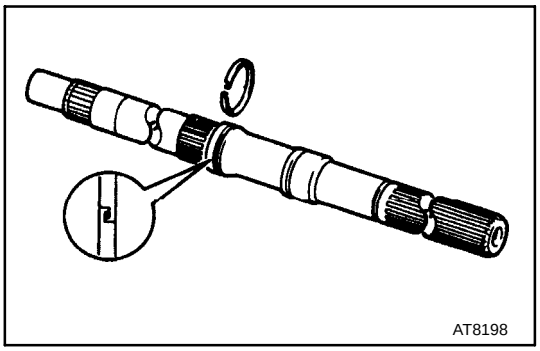

2. **REMOVE OIL SEAL RING FROM OUTPUT SHAFT**
3. **REMOVE REAR PLANETARY GEAR FROM REAR PLANETARY RING GEAR**

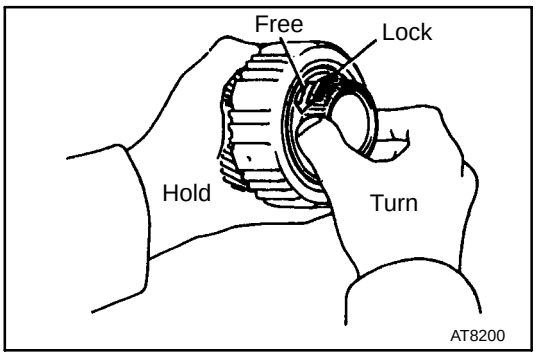

4. CHECK OPERATION OF NO. 2 ONE-WAY CLUTCH

Hold the planetary gear and turn the one-way clutch inner race. Check that the ore-way clutch inner race must be able to turn freely counterclockwise and locks clockwise.

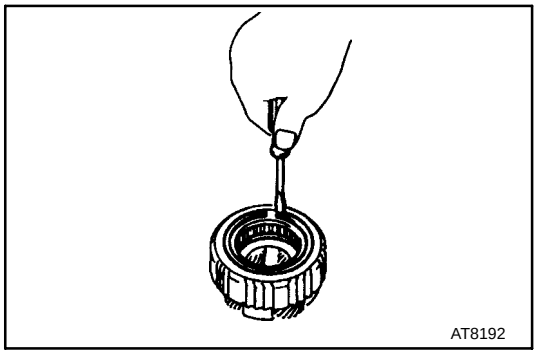

5. REMOVE NO. 2 ONE-WAY CLUTCH

(a) Remove the one-way clutch inner race from the rear planetary gear.

(b) Remove the snap ring with a screwdriver.

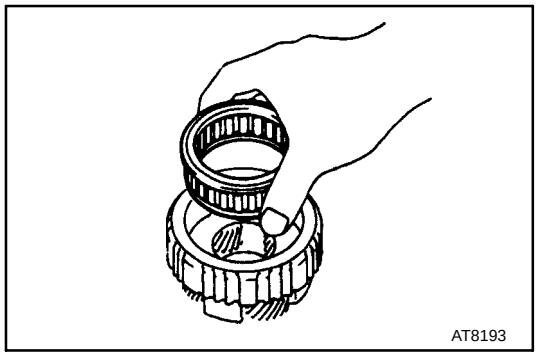

(c) Remove the No. 2 one-way clutch with retainers from the planetary gear.

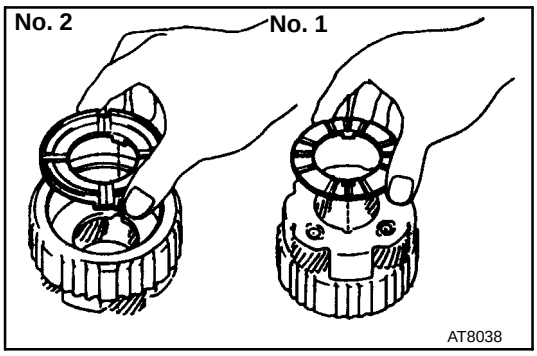

6. REMOVE NO. 2 AND NO. 1 THRUST WASHERS

7. REMOVE RACES AND BEARING FROM REAR PLANETARY RING GEAR

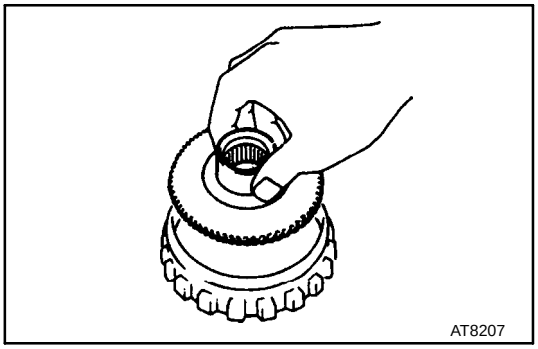

8. REMOVE RING GEAR FLANGE

(a) Remove the snap ring with a screwdriver.

(b) Remove the ring gear flange.

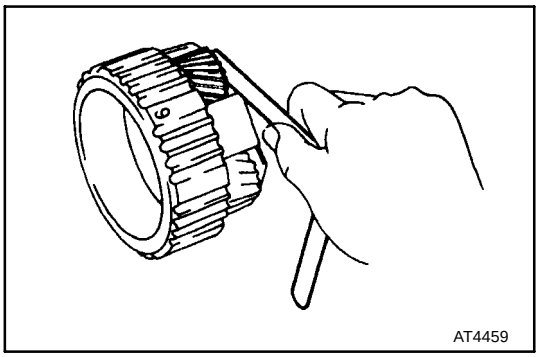

REAR PLANETARY GEAR INSPECTION

MEASURE PLANETARY PINION GEAR THRUST CLEARANCE

Using a feeler gauge, measure the planetary pinion gear thrust clearance.

Standard clearance:

0.20 - 0.60 mm (0.0079 - 0.0236 in.)

Maximum clearance: 1.00 mm (0.0394 in.)

If the clearance is greater than the maximum, replace the planetary gear assembly.

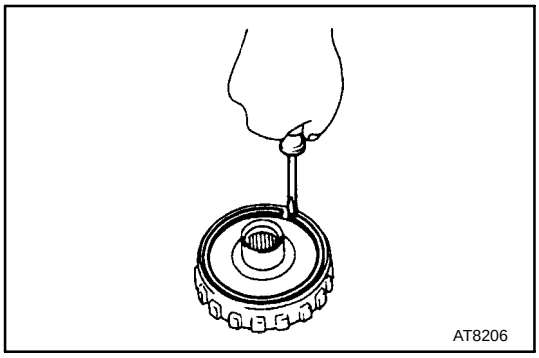

REAR PLANETARY GEAR, NO. 2 ONE-WAY CLUTCH AND OUTPUT SHAFT ASSEMBLY

1. INSTALL RING GEAR FLANGE

(a) Install the ring gear flange.

(b) Using a screwdriver, install the snap ring.

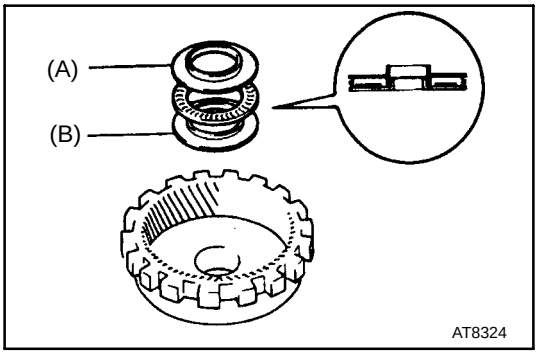

2. INSTALL RACES AND BEARING

Coat the races and bearing with petroleum jelly, and install them onto the rear planetary ring gear.

Races and bearing diameter

mm (in.)

	Inside	Outside
Race (A)	28.8 (1.134)	44.8 (1.764)
Bearing	30.1 (1.185)	44.7 (1.760)
Race (B)	27.8 (1.094)	44.8 (1.764)

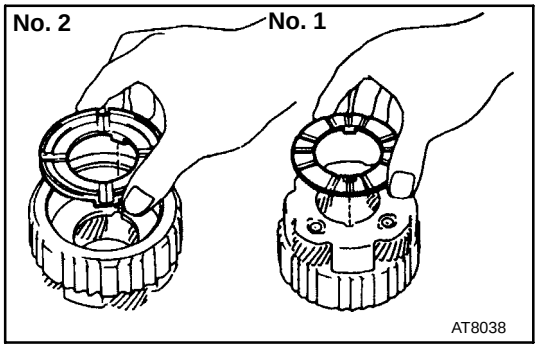

3. INSTALL NO. 1 AND NO. 2 THRUST WASHERS

(a) Coat the thrust washers with petroleum jelly.

(b) Install the thrust washers onto both sides of the rear planetary gear.

HINT: Make sure that the lug shapes match the cutout portions on the rear planetary gear.

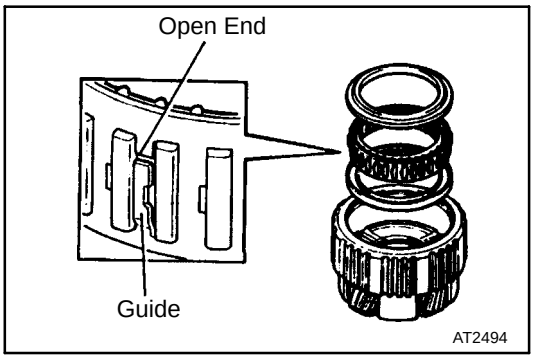

4. INSTALL NO. 2 ONE-WAY CLUTCH

(a) Install the one-way clutch and 2 retainers into the rear planetary gear.

HINT: Make sure that the open ends of the guides on the one-way clutch are faced upward.

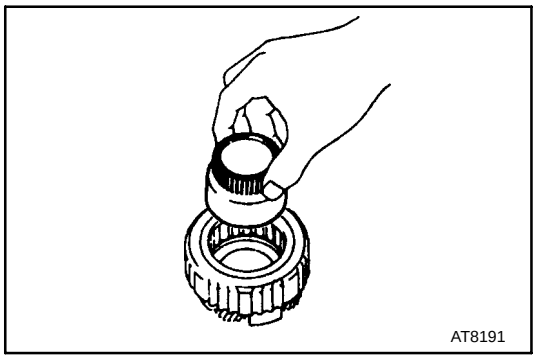

(b) Using a screwdriver, install the snap ring.

(c) While turning counterclockwise, install the one-way clutch inner race to rear planetary gear.

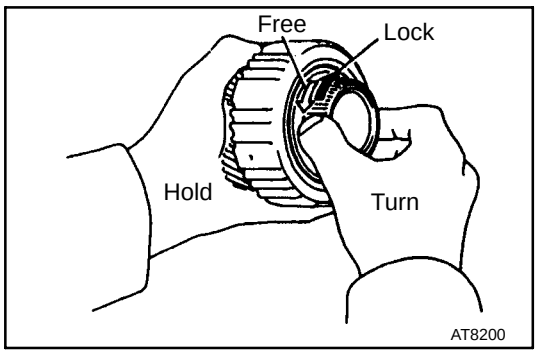

5. CHECK OPERATION OF NO. 2 ONE-WAY CLUTCH

Hold the planetary gear and turn the one-way clutch inner race. Check that the one-way clutch inner race must be able to turn freely counterclockwise and locks clockwise.

6. INSTALL REAR PLANETARY GEAR ONTO REAR PLANETARY RING GEAR

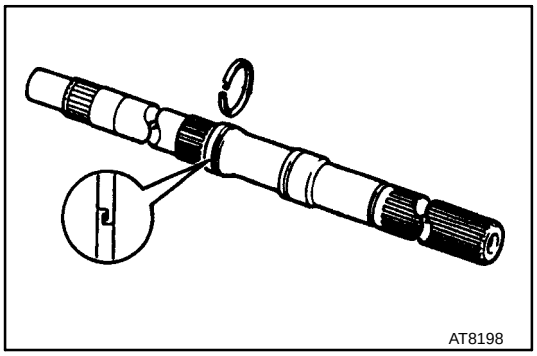

7. INSTALL OIL SEAL RING

Coat an oil seal ring with ATF and install it to the output shaft.

NOTICE: Do not spread the ring ends too much.

HINT: After installing the oil seal ring, check that it rotates smoothly.

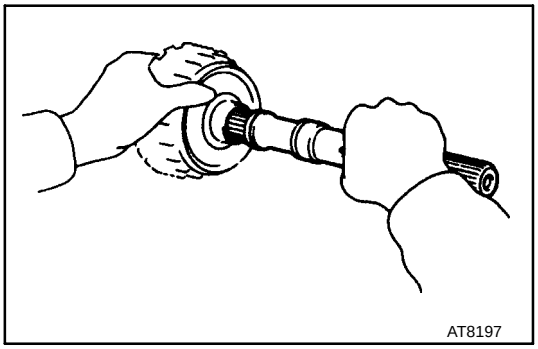

8. INSTALL OUTPUT SHAFT INTO REAR PLANETARY GEAR ASSEMBLY

VALVE BODY

COMPONENTS

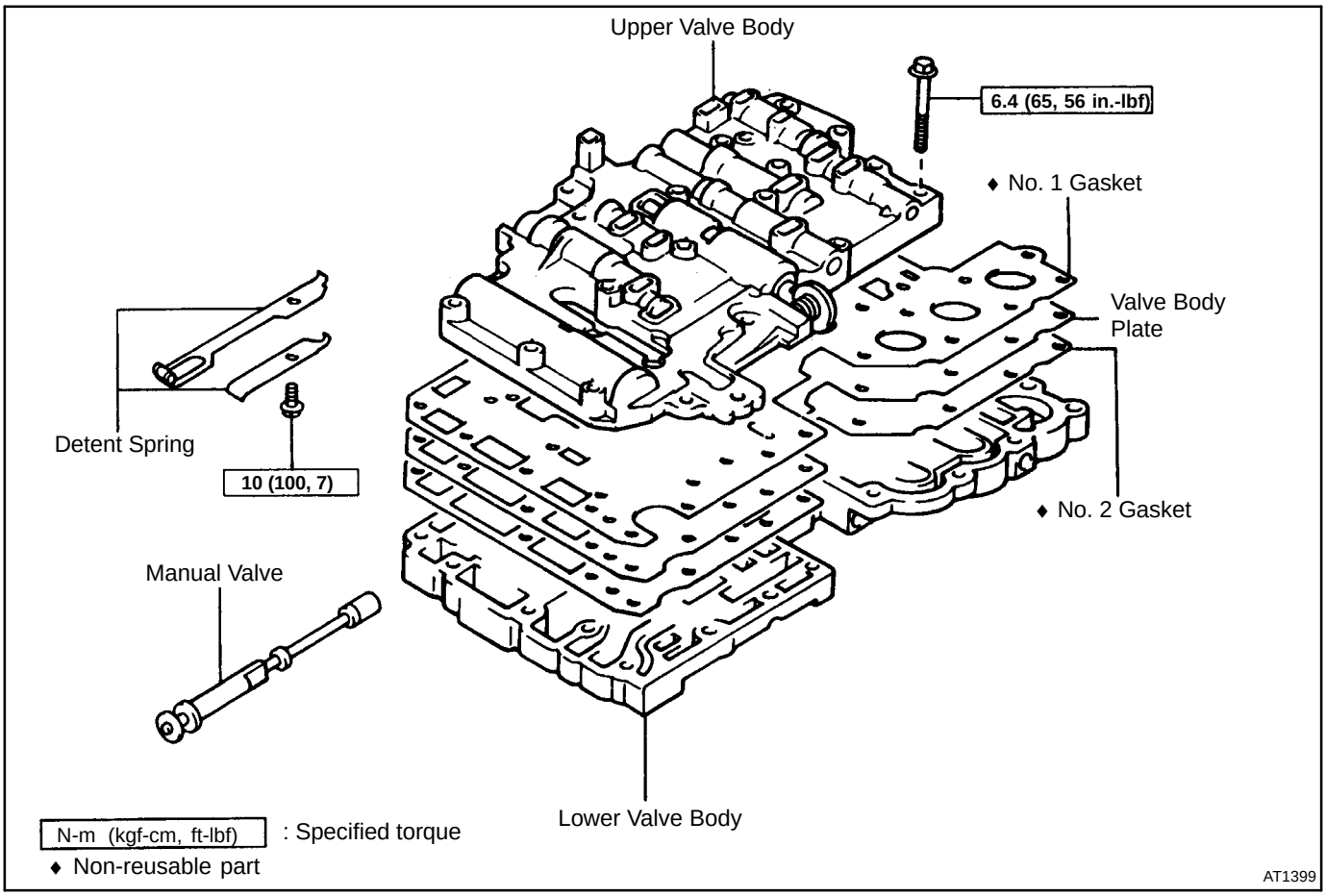

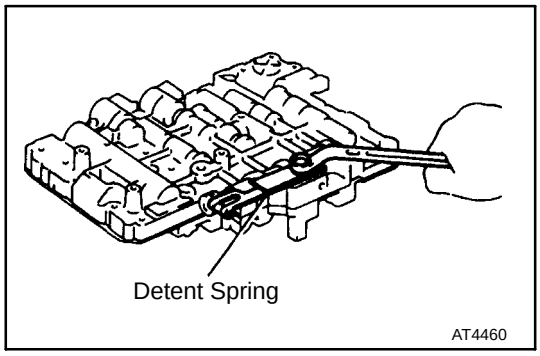

VALVE BODY DISASSEMBLY

1. UNBOLT AND REMOVE DETENT SPRING

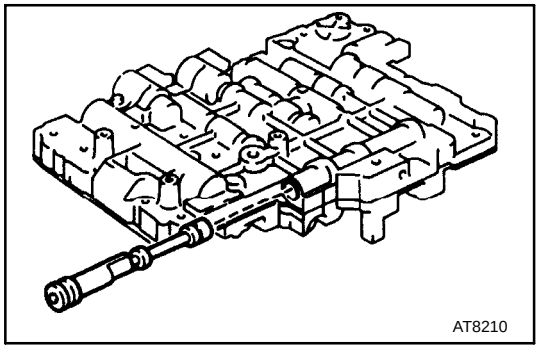

2. REMOVE MANUAL VALVE

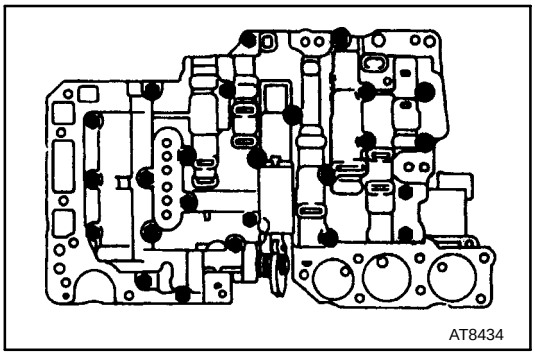

3. TURN OVER ASSEMBLY AND REMOVE 25 BOLTS

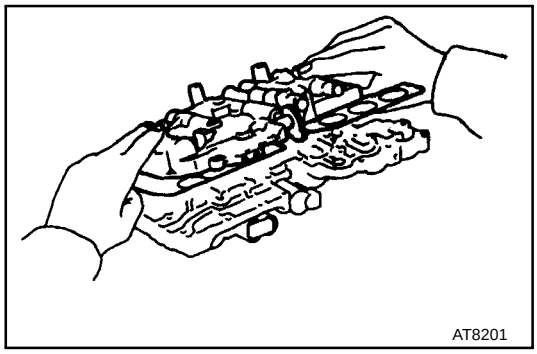

4. LIFT OFF UPPER VALVE BODY AND PLATE AS A SINGLE UNIT

Hold the valve body plate to the upper valve body.
HINT: Be careful that the check balls and strainer do not fall out.

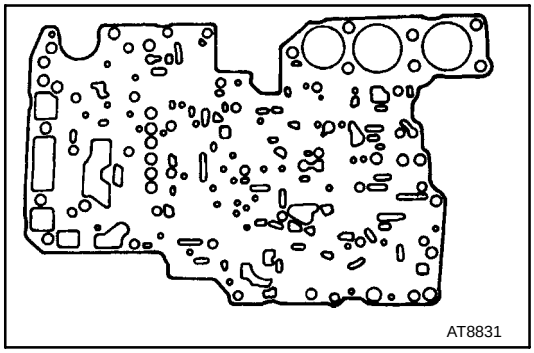

VALVE BODY ASSEMBLY

1. POSITION NEW NO.1 GASKET ON UPPER VALVE BODY

Align a new No. 1 gasket at each bolt hole.

2. POSITION VALVE BODY PLATE ON NO.1 GASKET

Align the plate at each bolt hole.

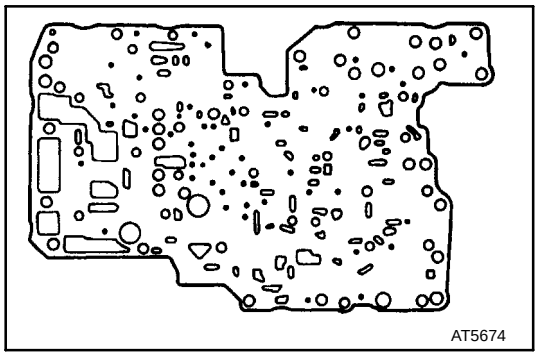

3. POSITION NEW No.2 GASKET ON PLATE

Align a new No. 2 gasket at each bolt hole.

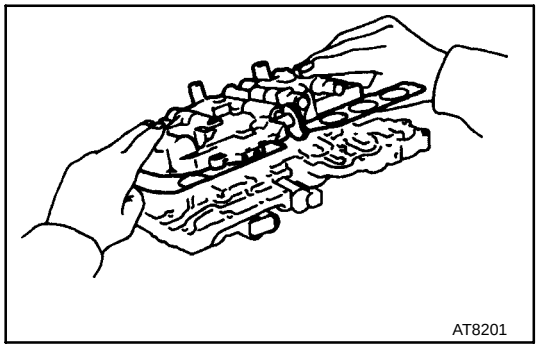

4. PLACE UPPER VALVE BODY WITH PLATE AND GASKETS ON TOP OF LOWER VALVE BODY

Align each bolt hole and gasket in the valve body.

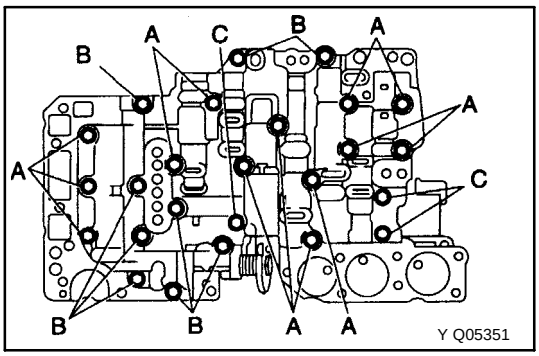

5. INSTALL 25 BOLTS TO UPPER VALVE BODY

HINT: Each bolt length is indicated below.

Torque: 6.4 N-m (65 kgf-cm, 56 in.-lbf)

Bolt length:

Bolt A: 38 mm (1.50 in.)
Bolt B: 20 mm (0.79 in.)
Bolt C: 28 mm (1.10 in.)

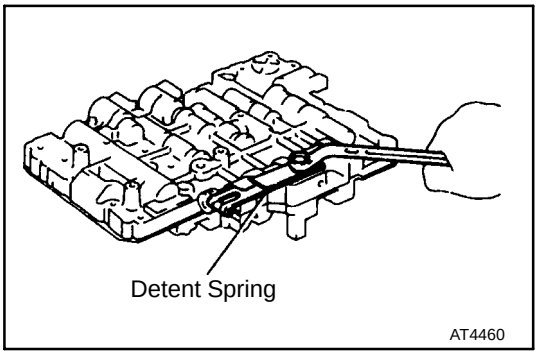

6. INSTALL MANUAL VALVE

7. INSTALL DETENT SPRING

Torque: 10 N-m (100 kgf-cm, 7 ft-lbf)

7. MAKE SURE MANUAL VALVE MOVES SMOOTHLY

UPPER VALVE BODY

COMPONENTS

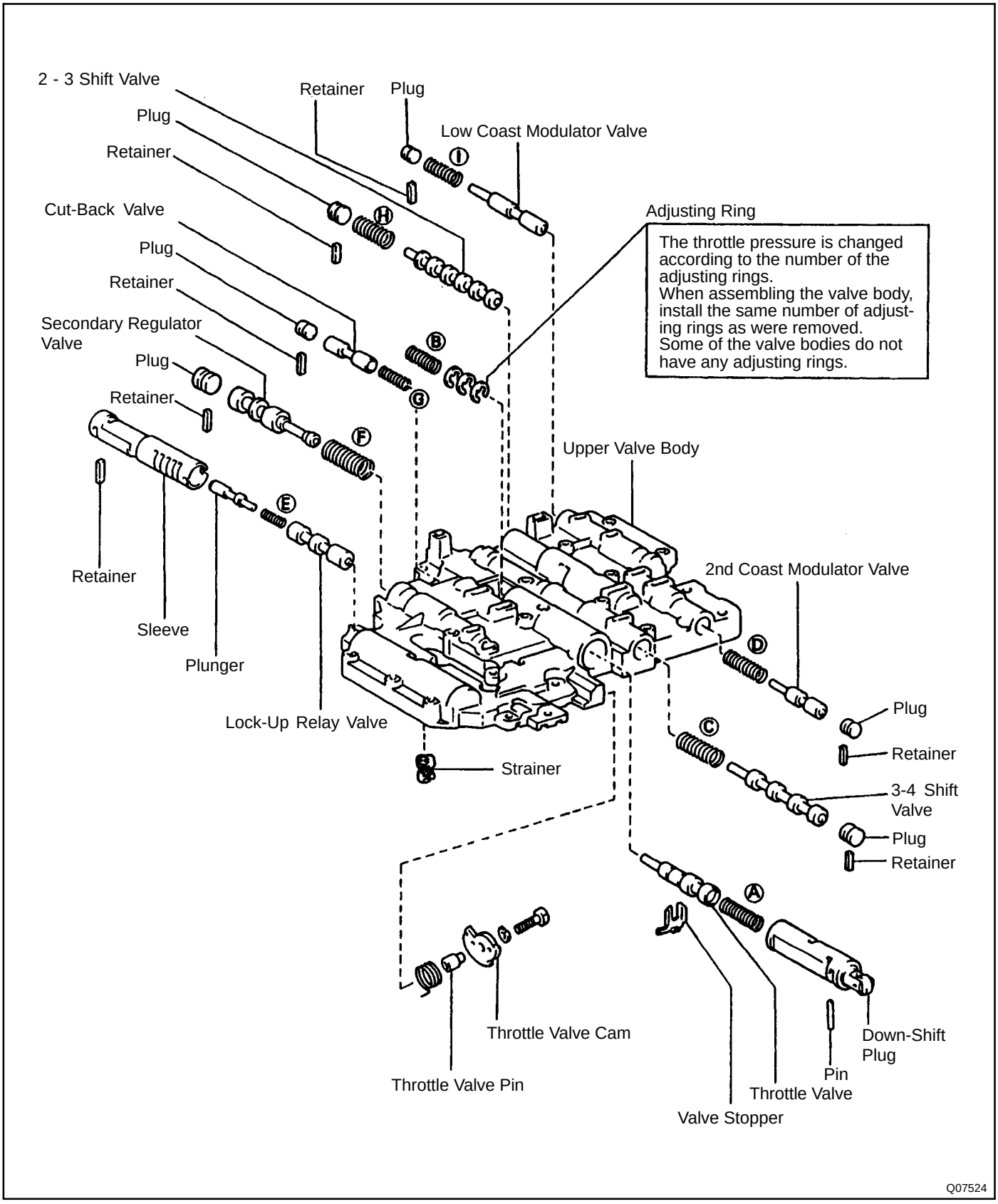

VALVE BODY SPRING SPECIFICATIONS

HINT: During reassembly please refer to the spring specifications below to help you to identify the different springs.

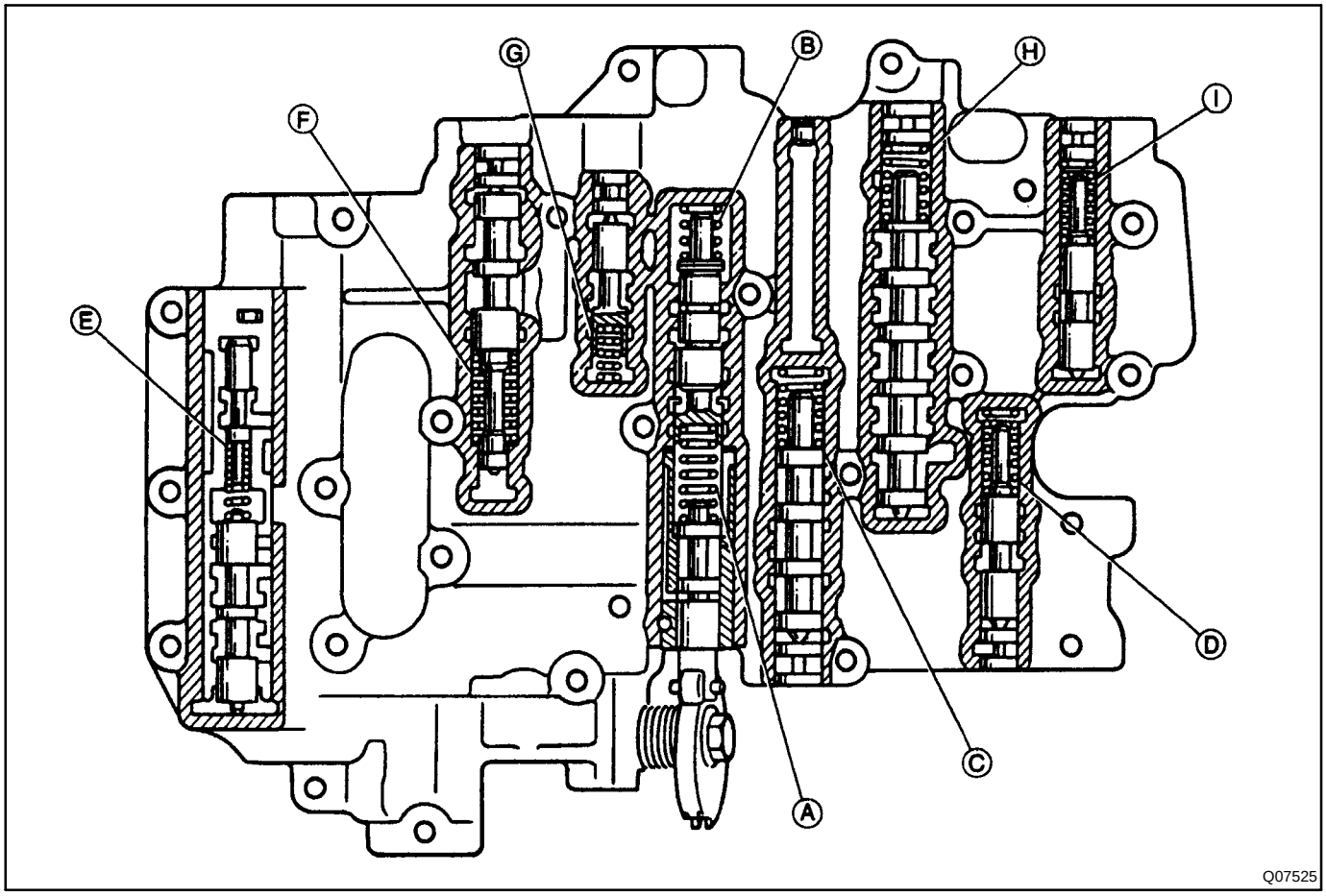

Mark	Name	Free length / Outer diameter mm (in.)	Color
Ⓐ	Down-shift plug	27.3 (1.075) / 8.7 (0.343)	Yellow
Ⓑ	Throttle valve	20.6 (0.811) / 9.2 (0.362) or 23.3 (0.917) / 9.2 (0.362)	Blue White
Ⓒ	3 - 4 shift valve	30.8 (1.213) / 9.7 (0.382)	Purple
Ⓓ	2nd coast modulator valve	30.9 (1.217) / 8.3 (0.327)	Purple
Ⓔ	Lock-up relay valve	21.4 (0.843) / 5.5 (0.217)	Light Gray
Ⓕ	Secondary regulator valve	29.9 (1.177) / 11.0 (0.433)	Green
Ⓖ	Cut-back valve	21.8 (0.858) / 6.0 (0.236)	Red
Ⓗ	2 - 3 Shift valve	30.8 (1.213) / 9.7 (0.382)	Blue
Ⓘ	Low coast modulator valve	30.4 (1.197) / 8.3 (0.327)	Light Green

RETAINERS. PIN, STOPPER, CHECK BALLS AND STRAINER LOCATION

1. RETAINER, STOPPER AND PIN

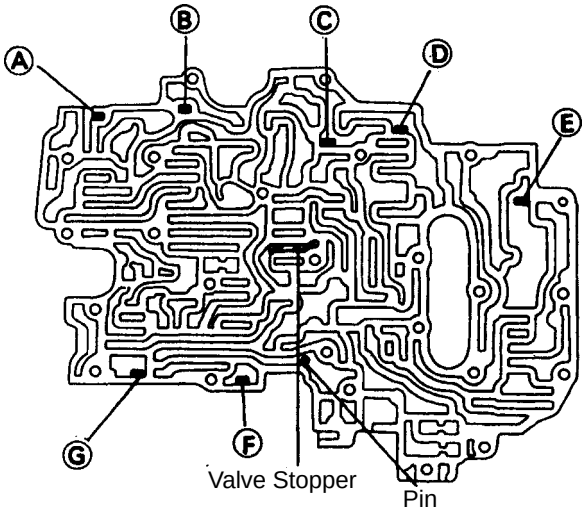

Mark	Retainer	Height / Width / Thickness mm (in.)
Ⓐ	Low coast modulator valve	14.5 (0.571) / 5.0 (0.197) / 3.2 (0.126)
Ⓑ	2 - 3 shift valve	14.0 (0.551) / 5.0 (0.197) / 3.2 (0.126)
Ⓒ	Cut-back valve	15.0 (0.591) / 5.0 (0.197) / 3.2 (0.126)
Ⓓ	Secondary regulator valve	14.0 (0.551) / 5.0 (0.197) / 3.2 (0.126)
Ⓔ	Lock-up relay valve	21.2 (0.835) / 5.0 (0.197) / 3.2 (0.126)
Ⓕ	3 - 4 shift valve	16.5 (0.650) / 6.0 (0.236) / 3.2 (0.126)
Ⓖ	2nd coast modulator valve	16.5 (0.650) / 6.0 (0.236) / 3.2 (0.126)

2. CHECK BALL

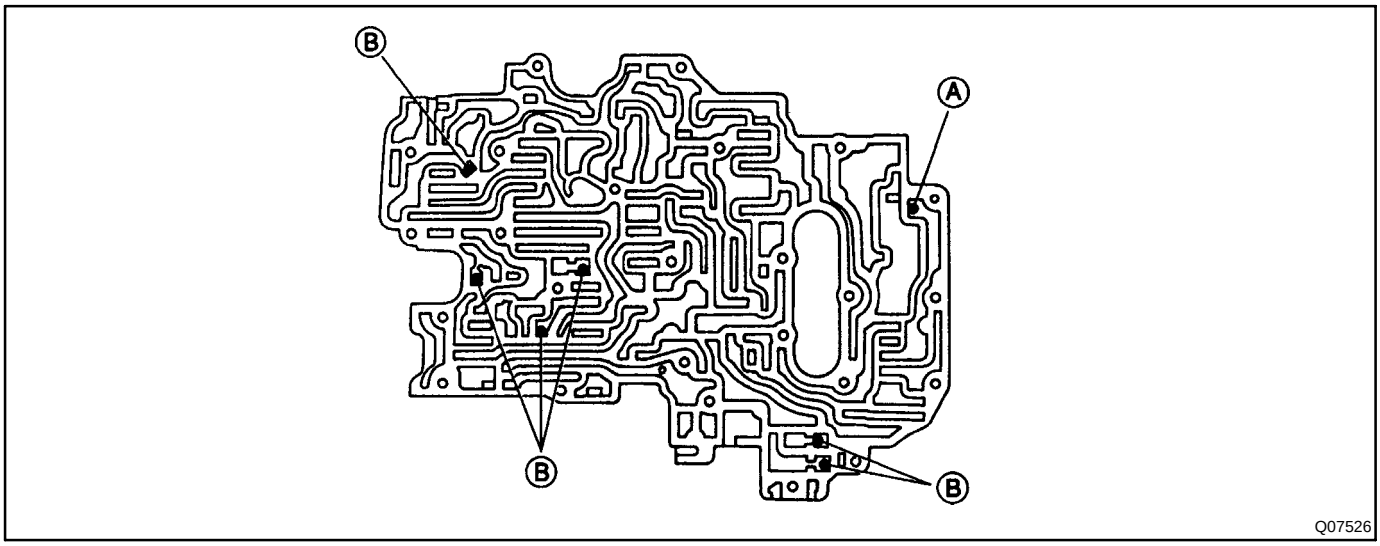

Mark	Check ball	Diameter mm (in.)
Ⓐ	Rubber ball	6.35 (0.2500)
Ⓑ	Rubber ball	5.45 (0.2181)

3. STRAINER

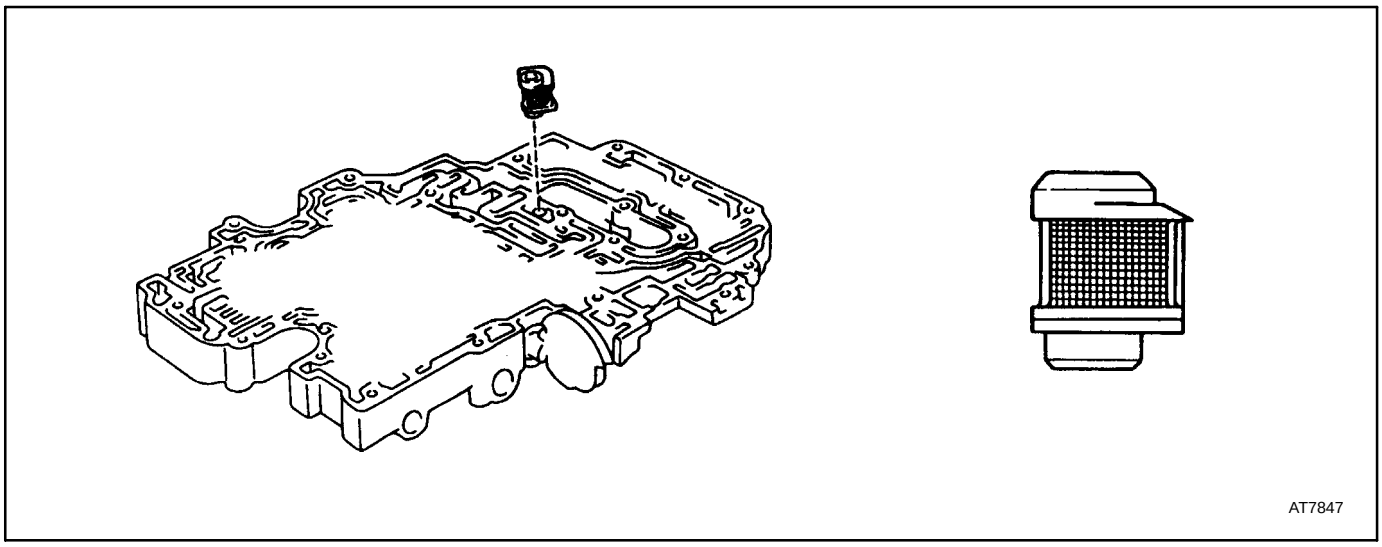

LOWER VALVE BODY

COMPONENTS

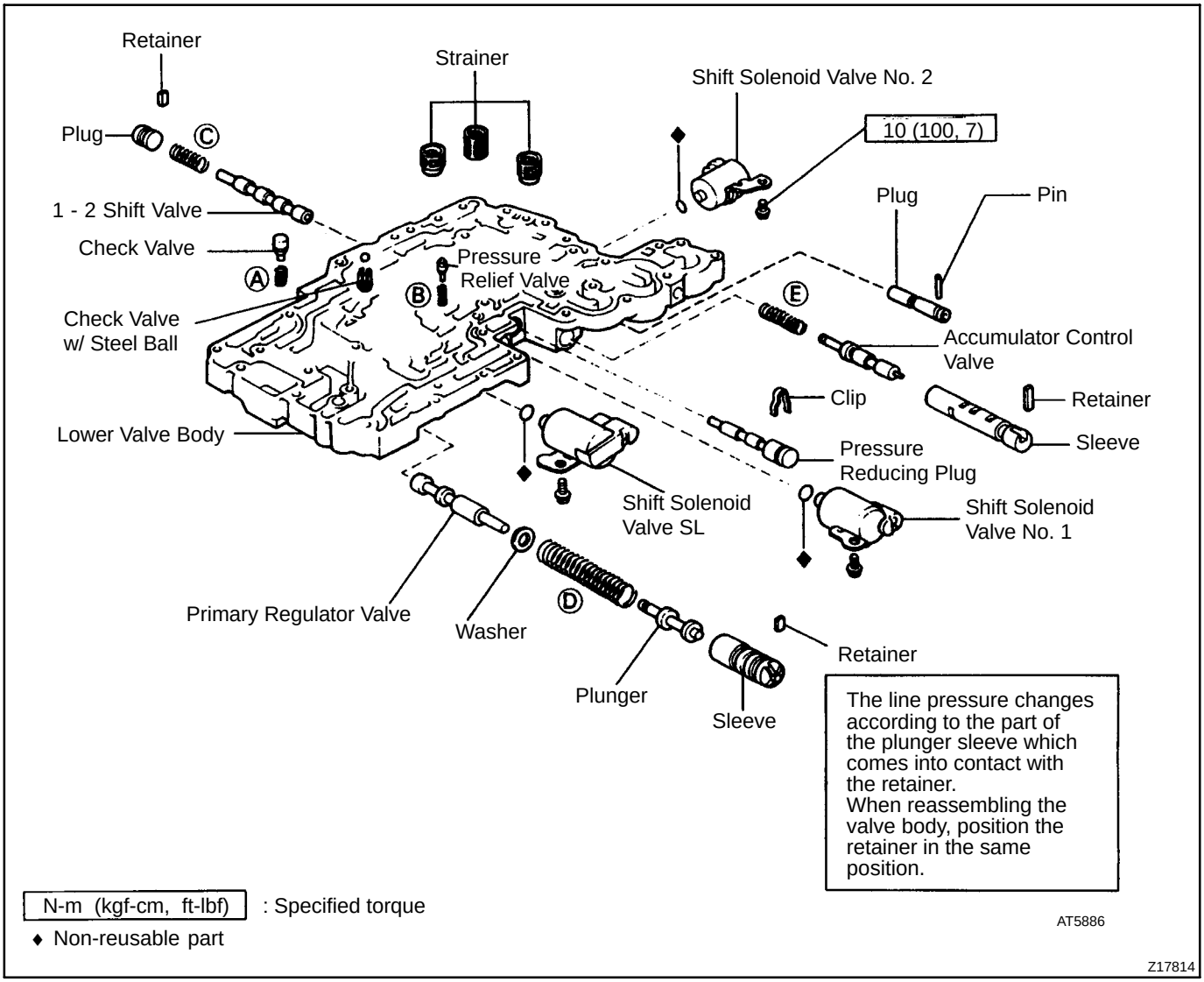

VALVE BODY SPRING SPECIFICATIONS

HINT: During reassembly please refer to the spring specifications below to help you to identify the different springs.

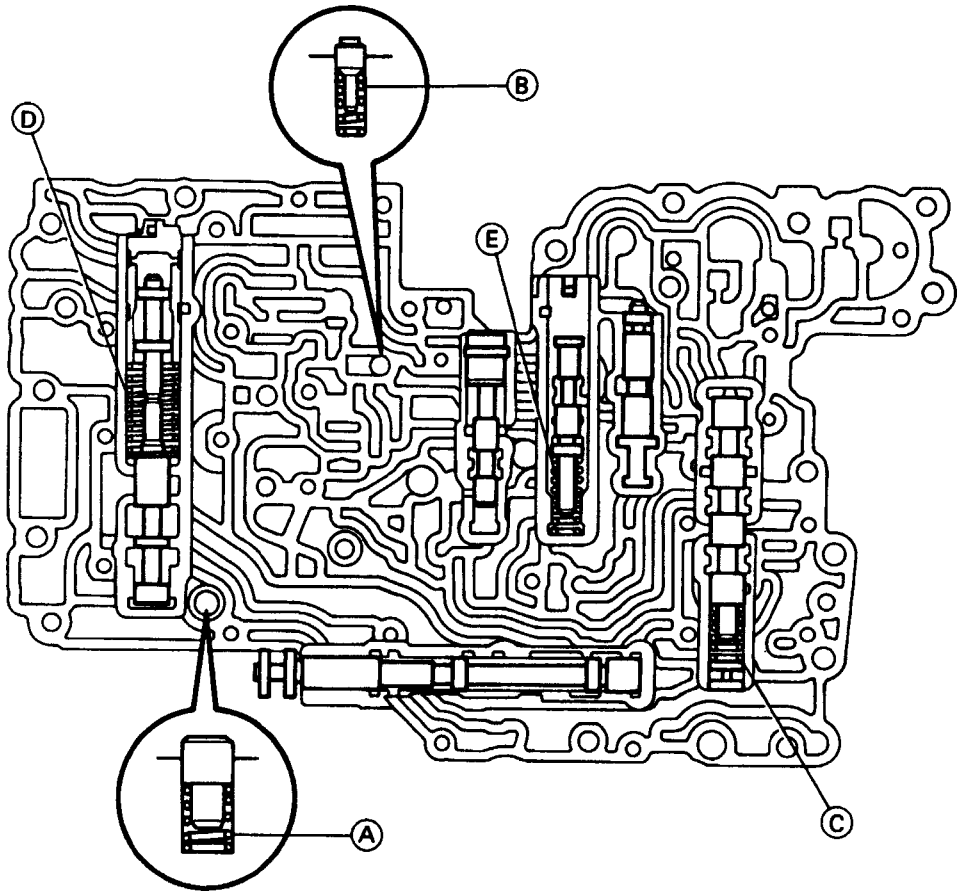

Q00631

Mark	Name	Free length / Outer diameter mm (in.)	Color
A	Check valve	20.2 (0.796) / 12.1 (0.476)	None
B	Pressure relief valve	11.2 (0.441) / 6.4 (0.252)	None
C	1 - 2 shift valve	30.8 (1.213) / 9.7 (0.382)	Purple
D	Primary regulator valve	62.3 (2.453) / 18.6 (0.732)	Purple
E	Accumulator control valve	33.9 (1.335) / 18.8 (0.346)	Pink

RETAINERS, CLIP, CHECK BALLS, STRAINERS, SPRINGS AND VALVES LOCATION

1. RETAINER AND CLIP

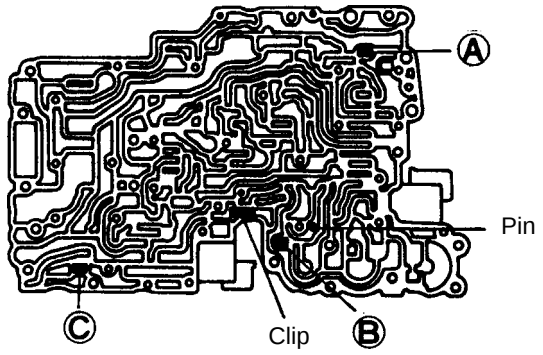

AT5626

Mark	Retainer	Height / Width / Thickness mm (in.)
Ⓐ	1 - 2 shift valve	16.5 (0.650) / 6.0 (0.236) / 3.2 (0.126)
Ⓑ	Accumulator control valve	21.2 (0.835) / 5.0 (0.197) / 3.2 (0.126)
Ⓒ	Primary regulator valve	16.2 (0.638) / 5.0 (0.197) / 3.2 (0.126)

2. CHECK BALL

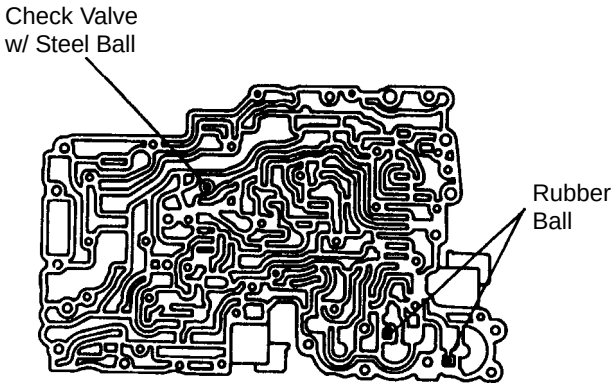

AT2346

Check ball	Diameter mm (in.)
Steel ball	6.35 (0.2500)

3. STRAINER, SPRING AND VALVE

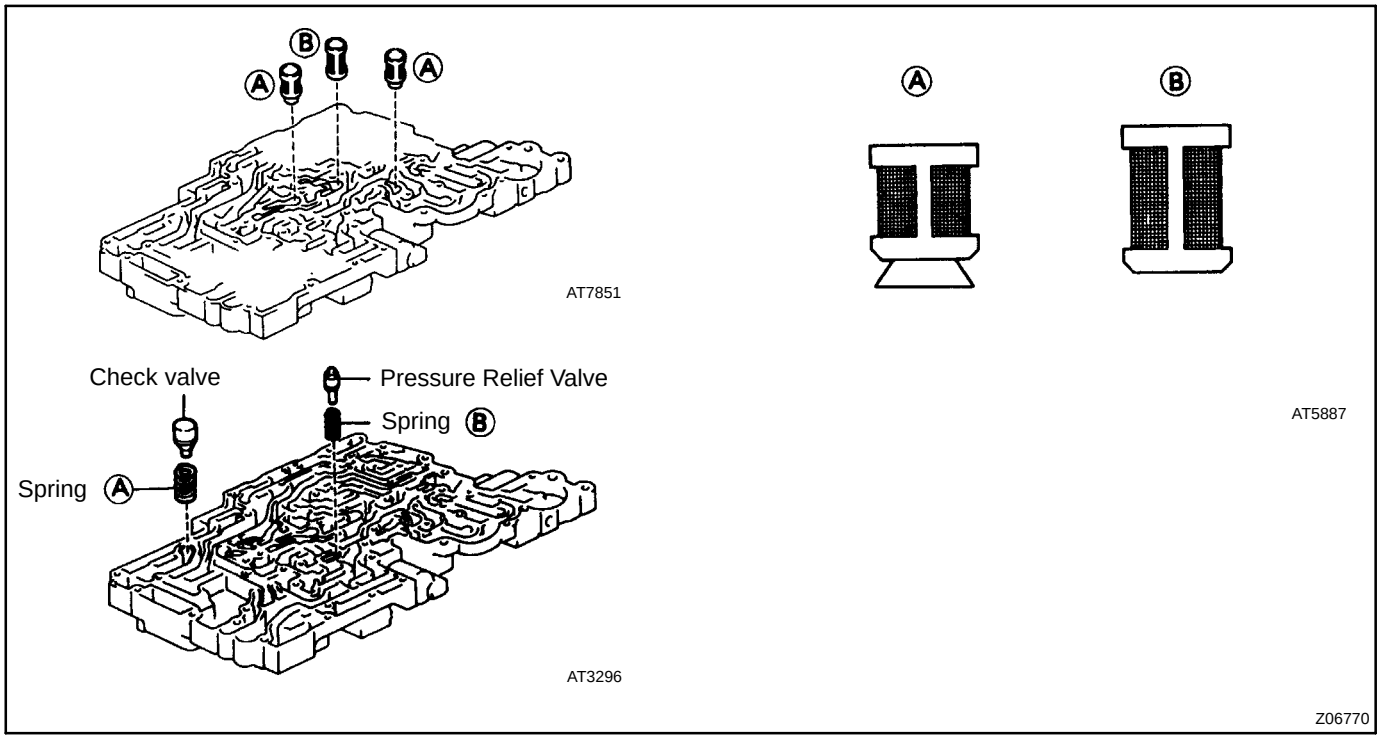

Mark	Strainer	Height / Diameter mm (in.)
A	Solenoid oil strainer	20.2 (0.795) / 12.1 (0.476)
B	Throttle oil strainer	11.2 (0.441) / 6.4 (0.252)

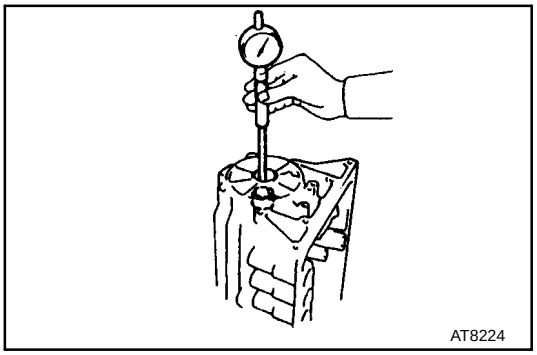

TRANSMISSION CASE

TRANSMISSION CASE INSPECTION

INSPECT TRANSMISSION CASE BUSHING

Using a cylinder gauge, measure the inside diameter of the transmission case rear bushing.

Maximum inside diameter: 38.19 mm (1.5035 in.)

If the inside diameter is greater than the maximum, replace the transmission case.

COMPONENT PARTS INSTALLATION

Disassembly, inspection and assembly of each component group have been indicated in the preceding chapter. Before assembly, make sure again that all component groups are assembled correctly.
If something wrong is found in a certain component group during assembly, inspect and repair this group Immediately.
Recommended ATF: DEXRON® II

GENERAL NOTES:

1. **The automatic transmission is composed of highly precision-finished parts, necessitating careful inspection before assembly because even a small nick could cause fluid leakage or affect performance.**
2. **Before assembling new clutch discs, soak them in ATF for at least 15 minutes.**
3. **Apply ATF on sliding or rotating surfaces of parts before assembly.**
4. **Use petroleum jelly to keep small parts in their place.**
5. **Do not use adhesive cements on gaskets and similar parts.**
6. **When assembling the transmission, be sure to use new gaskets and O-rings.**
7. **Dry all parts with compressed air - never use shop rags.**
8. **When working with FIPG material, you must observe the following.**
   - **Using a razor blade and gasket scraper, remove all the old packing (FIPG) material from the gasket surfaces.**
   - **Thoroughly clean all components to remove all the loose material.**
   - **Clean both sealing surfaces with a non-residue solvent.**
   - **Parts must be assembled within 10 minutes of application. Otherwise, the packing (FIPG) material must be removed and reapplied.**

BEARINGS AND RACES INSTALLATION POSITION AND DIRECTION

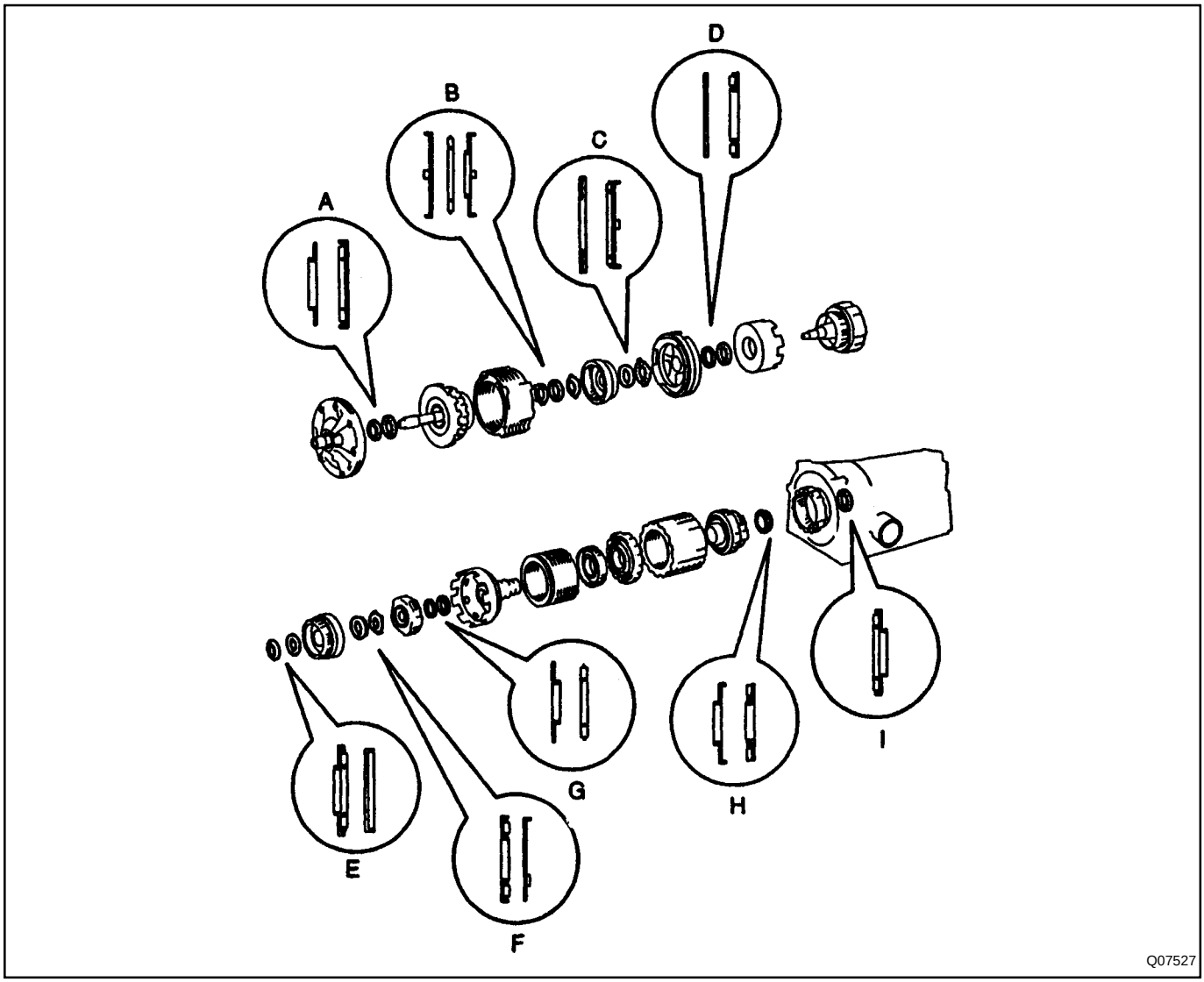

Mark	Front Race Diameter Inside / Outside mm (in.)	Thrust Bearing Diameter Inside / Outside mm (in.)	Rear Race Diameter Inside / Outside mm (in.)
A	28.1 (1.106) / 47.5 (1.870)	28.8 (1.134) / 50.4 (1.984)	—
B	27.2 (1.070) / 42.0 (1.654)	25.9 (1.020) / 47.0 (1.850)	24.0 (0.945) / 48.0 (1.890)
C	37.1 (1.461) / 59.0 (2.323)	33.6 (1.323) / 50.3 (1.980)	—
D	37.0 (1.457) / 51.0 (2.008)	33.5 (1.319) / 47.8 (1.882)	—
E	—	26.0 (1.024) / 43.0 (1.693)	26.5 (1.043) / 53.7 (2.114)
F	—	49.7 (1.957) / 64.7 (2.547)	53.3 (2.098) / 63.6 (2.504)
G	33.5 (1.319) / 47.8 (1.882)	35.4 (1.394) / 48.0 (1.890)	—
H	28.5 (1.122) / 44.2 (1.740)	27.5 (1.083) / 44.2 (1.740)	—
I	—	39.2 (1.543) / 57.7 (2.272)	—

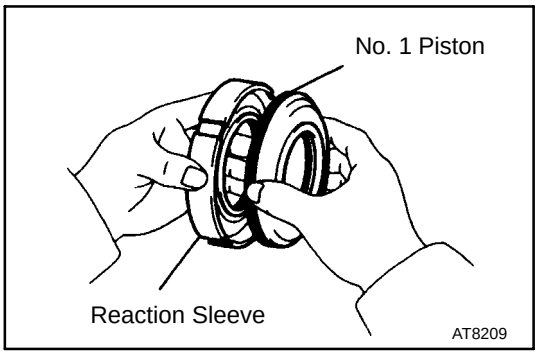

TRANSMISSION INSTALLATION

1. INSTALL COMPONENTS OF 1ST AND REVERSE BRAKE PISTON

(a) Coat 3 new O-rings with ATF.

(b) Install the 2 O-rings on the No. 1 piston.

(c) Install the O-ring on the reaction sleeve.

(d) Install the No. 1 piston to the reaction sleeve.

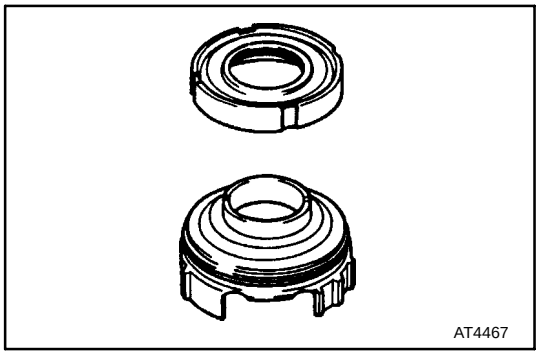

(e) Coat a new O-ring with ATF and install it on the No.2 piston.

(f) Install the No. 1 piston with the reaction sleeve onto the No. 2 piston.

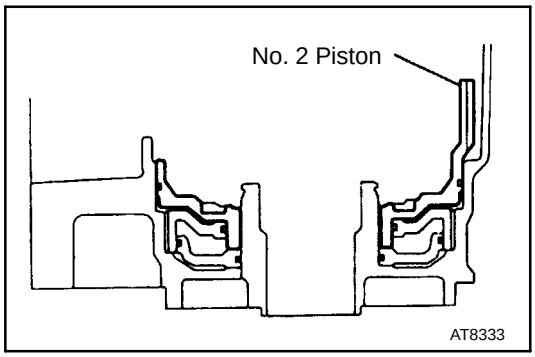

(g) Align the teeth of the No. 2 piston into the proper grooves.

(h) Being careful not to damage the O-rings, press in the No. 2 and No. 1 1st and reverse brake pistons into the transmission case.

(i) Place the piston return spring onto the No. 2 piston.

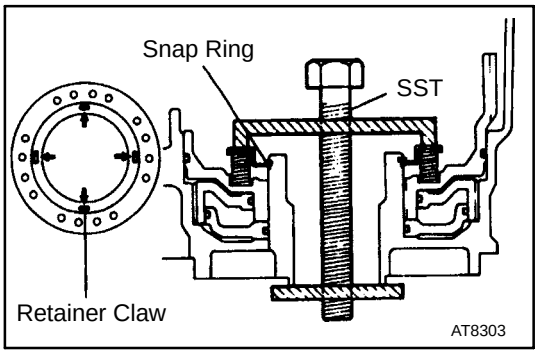

(j) Set SST as shown, and compress the return spring with SST.

SST 09350-30020 (09350-07050)

(k) Install the snap ring with a screwdriver. Be sure the end gap of the snap ring is not aligned with the spring retainer claw.

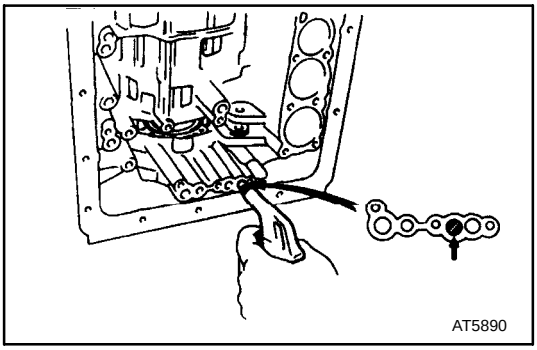

2. CHECK PISTON STROKE OF 1ST AND REVERSE BRAKE

Make sure the 1st and reverse brake pistons move smoothly when applying and releasing the compressed air into the transmission case.

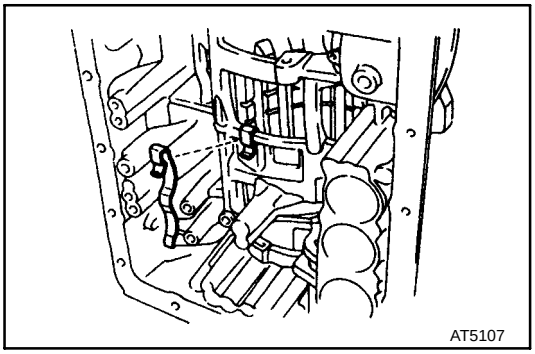

3. INSTALL LEAF SPRING

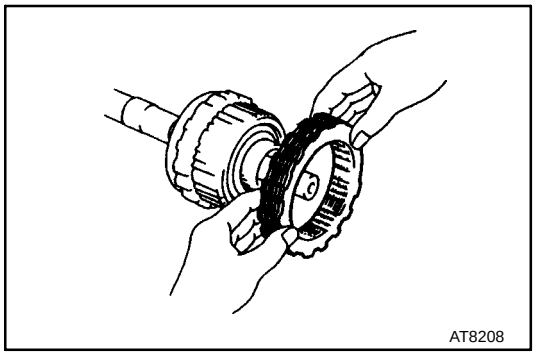

4. INSTALL REAR PLANETARY GEAR UNIT WITH 2ND BRAKE DRUM, 1ST AND REVERSE BRAKE PACK AND OUTPUT SHAFT

(a) Install the flange, the rounded edge facing forward.

(b) Reinstall the plates and discs.
Install in order: P = Plate D = Disc
D-P-D-P-D-P-D-P-D-P-D-P-D-P

(c) Install the 2nd brake drum assembly.

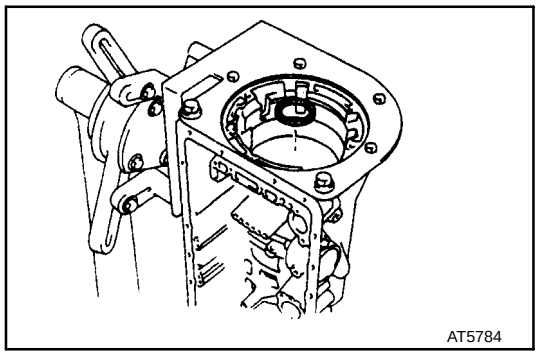

(d) Coat the assembled bearing and race with petroleum jelly and install it onto the case.

Assembled bearing and race diameter

mm (in.)

	Inside	Outside
Assembled bearing	39.2 (1.543)	57.7 (2.272)

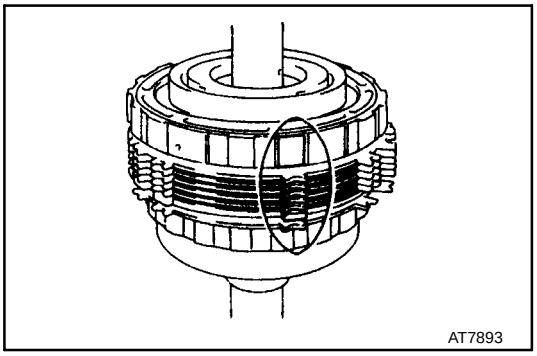

(e) Align the teeth of the 2nd brake drum, flange, discs and plates.

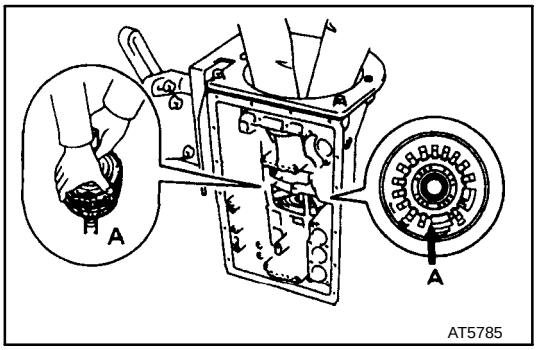

(f) Align the splines of the transmission case and the assembled rear planetary gear, 2nd brake drum, 1st and reverse brake pack and output shaft, indicated by A.

(g) Hold the output shaft with wooden blocks or equivalents.

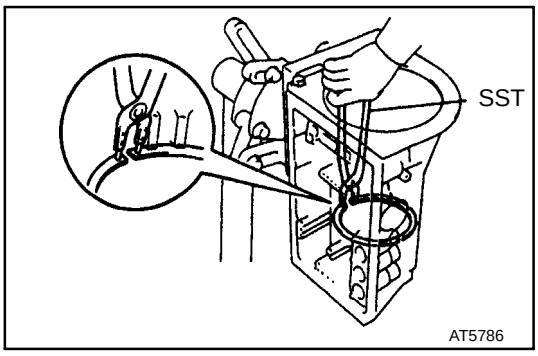

(h) Using SST, install the snap ring.
SST 09350-30020 (09350-07060)

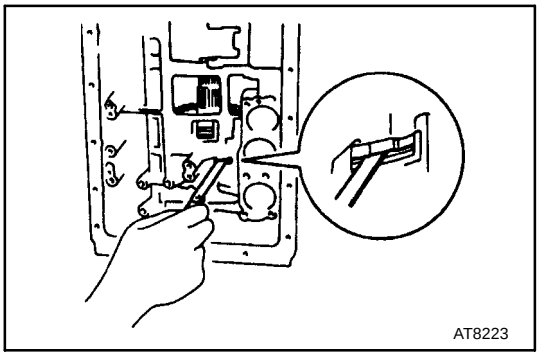

5. CHECK PACK CLEARANCE OF 1ST AND REVERSE BRAKE

Using a feeler gauge, measure clearance between the plate and second brake drum.
Clearance: 0.70 - 1.22 mm (0.0276 - 0.0480 in.)
If the values are non-standard, select another flange.
HINT: There are 6 different thicknesses for the flange.

Flange thickness

mm (in.)

No.	Thickness	No.	Thickness
50	5.0 (0.197)	53	4.4 (0.173)
51	4.8 (0.189)	54	4.2 (0.165)
52	4.6 (0.181)	55	4.0 (0.157)

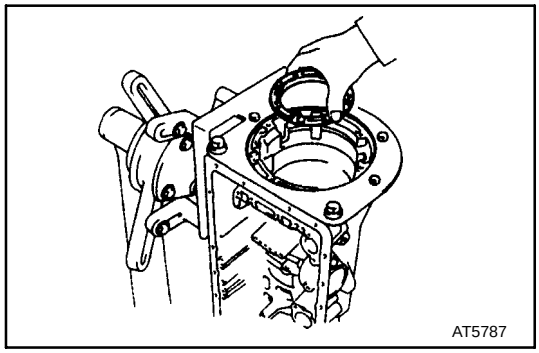

6. INSTALL 2ND BRAKE PISTON SLEEVE

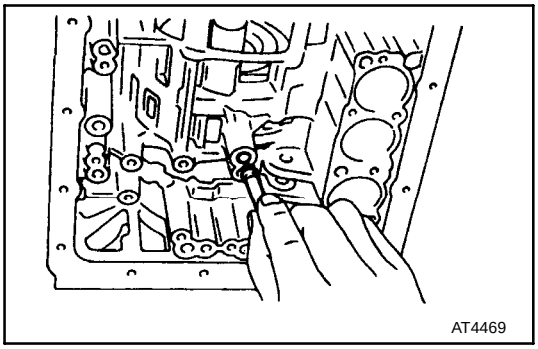

7. INSTALL NEW BRAKE DRUM GASKET

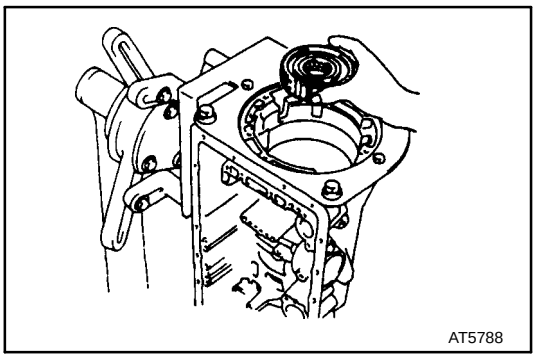

8. INSTALL NO. 1 ONE-WAY CLUTCH

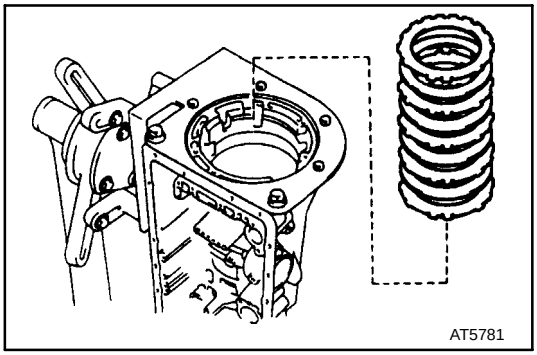

9. INSTALL FLANGE, PLATES AND DISCS OF 2ND BRAKE

(a) Install the 1.8 mm (0.071 in.) thick plate with the rounded edge side of the plate facing the disc.

(b) Install the plates and discs.

Plate thickness: 2.5 mm (0.098 in.)
Install in order: P = Plate D = Disc
D-P-D-P-D-P-D-P-D-P

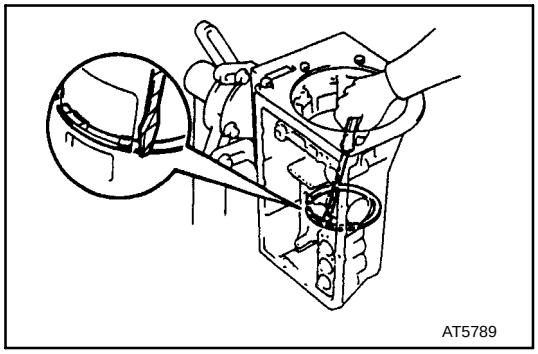

(c) Using a screwdriver, install the snap ring.

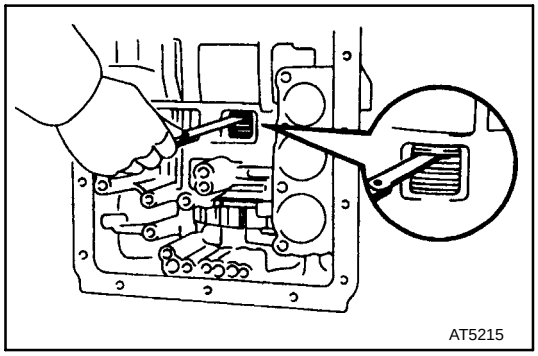

10. CHECK PACK CLEARANCE OF 2ND BRAKE

Using a feeler gauge, measure the clearance between the snap ring and flange.
Clearance: 0.62 - 1.98 mm (0.0244 - 0.0780 in.)
If the values are non-standard, check for an improper installation.

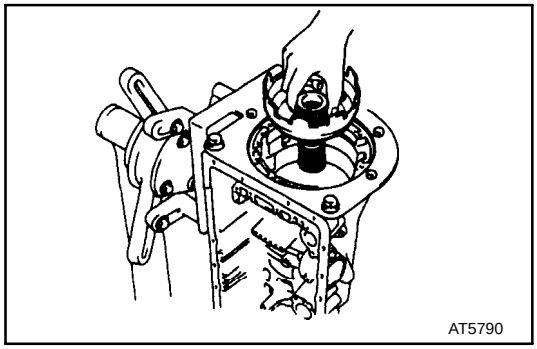

11. INSTALL PLANETARY SUN GEAR

While turning the planetary sun gear clockwise, install it into the No. 1 one-way clutch.
HINT: Confirm the thrust washer is installed correctly.

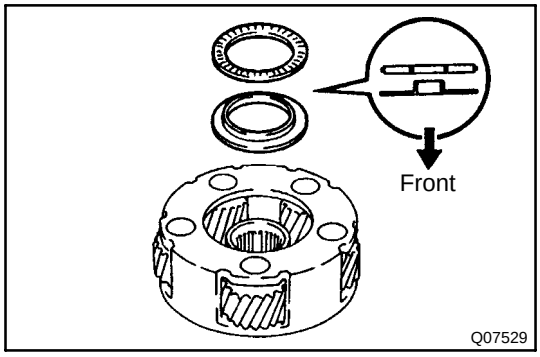

12. INSTALL FRONT PLANETARY GEAR

(a) Coat the bearing and race with petroleum jelly and install them onto the front planetary gear.

Bearing and race diameter

mm (in.)

	Inside	Outside
Bearing	35.4 (1.394)	48.0 (1.890)
Race	33.5 (1.319)	47.8 (1.882)

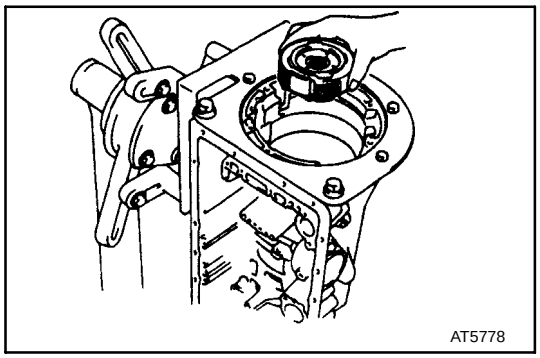

(b) Install the front planetary gear to the sun gear.

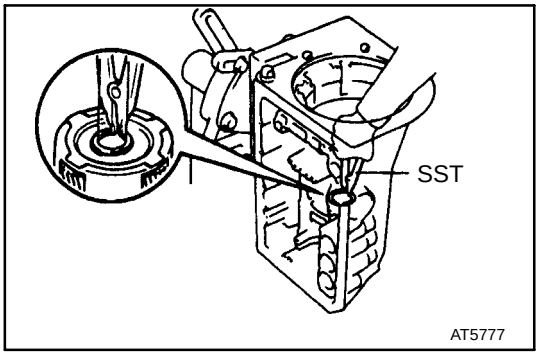

(c) Using SST, install the snap ring.

SST 09350-30020 (09350-07070)

(d) Remove the wooden blocks or equivalent under the output shaft.

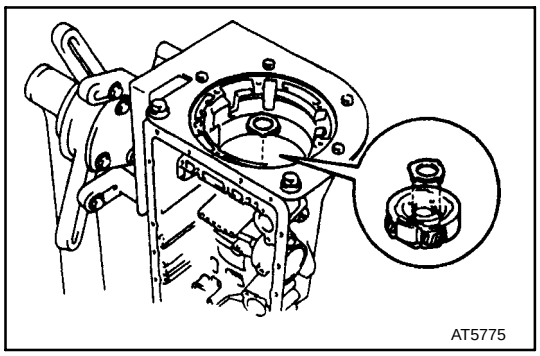

(e) Coat the bearing race with petroleum jelly and install it onto the front planetary gear.

Race diameter

mm (in.)

	Inside	Outside
Race	53.3 (2.098)	63.6 (2.504)

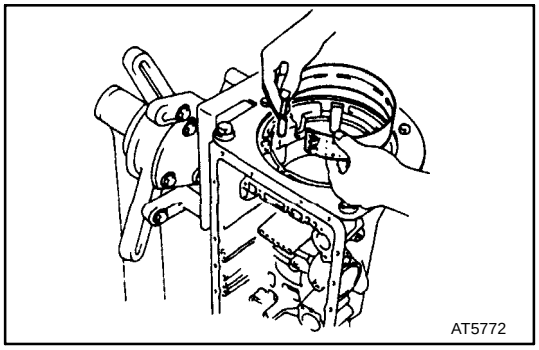

13. INSTALL 2ND COAST BRAKE BAND

(a) Install the 2nd coast brake band to the case.

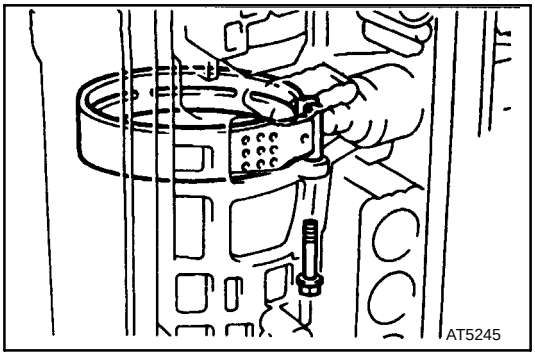

(b) Install the pin through the brake band.

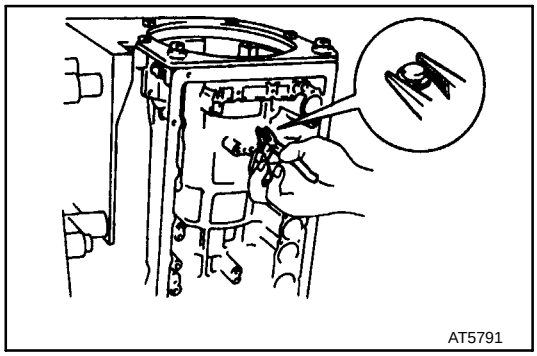

(c) Using needle-nose pliers, install the E-ring to the pin.

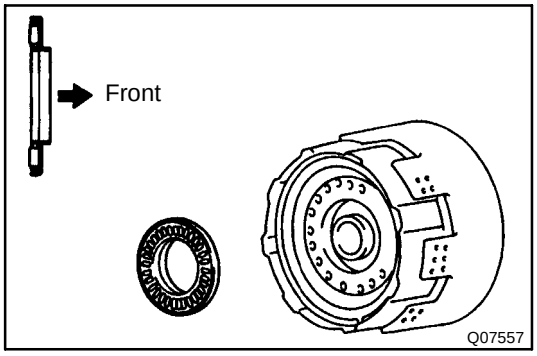

14. INSTALL FRONT PLANETARY RING GEAR TO FORWARD AND DIRECT CLUTCH

(a) Coat the bearing and race with petroleum jelly and install them onto the forward clutch.

Bearing and race diameter mm (in.)

	Inside	Outside
Assembled bearing	26.0 (1.024)	43.0 (1.693)

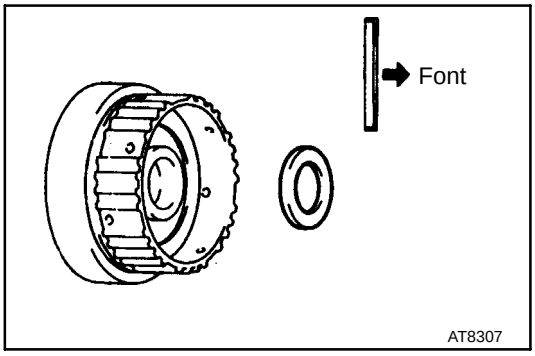

(b) Coat the race with petroleum jelly and install it onto the front planetary ring gear.

Race diameter mm (in.)

	Inside	Outside
Race	26.5 (1.043)	53.7 (2.114)

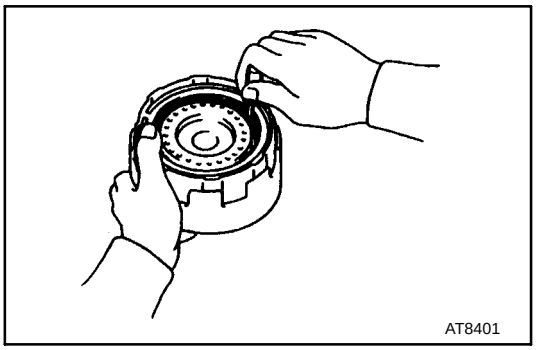

(c) Align the flukes of the discs in the forward clutch.

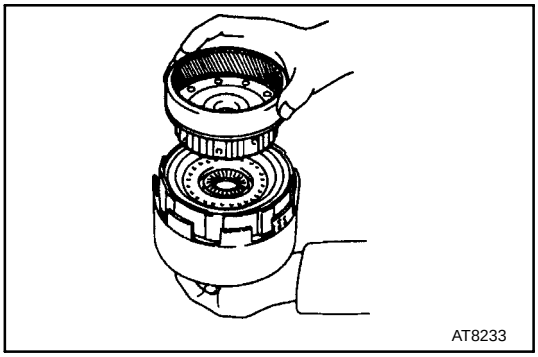

(d) Align the splines of the front planetary ring gear with the flukes of the discs and install the front planetary ring gear to the forward clutch.

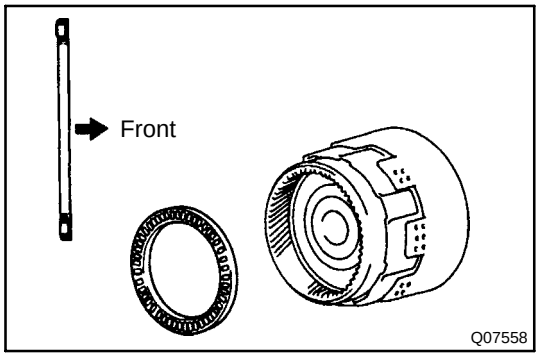

15. INSTALL ASSEMBLED DIRECT CLUTCH, FORWARD CLUTCH AND FRONT PLANETARY RING GEAR INTO CASE

(a) Coat the bearing and race with petroleum jelly and install them onto the ring gear.

Bearing and race diameter mm (in.)

	Inside	Outside
Assembled bearing	49.7 (1.957)	64.7 (2.574)

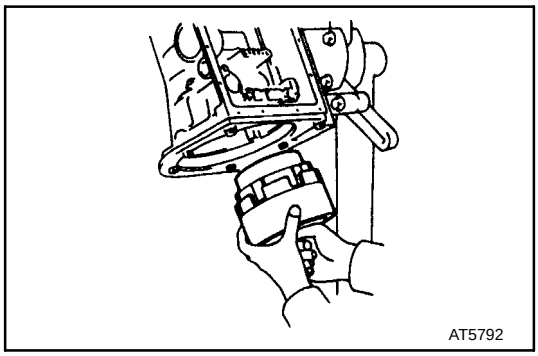

(b) Install the assembled direct clutch, forward clutch and front planetary ring gear into the transmission case.

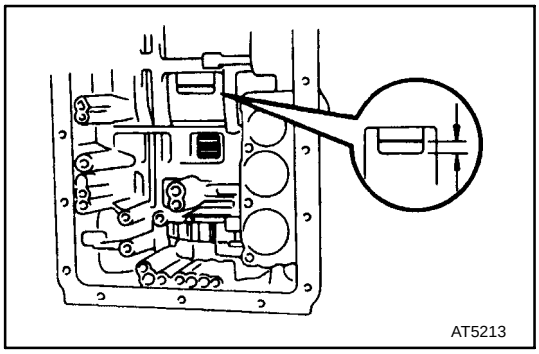

(c) Using vernier calipers, measure the distance between the sun gear input drum and direct clutch drum.

Height: 5.3 - 7.3 mm (0.209 - 0.287 in.)

If the values are non-standard, check for an improper installation.

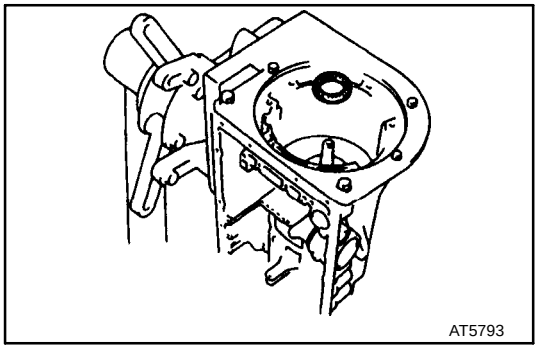

(d) Coat the assembled bearing and race with petroleum jelly and install it onto the forward clutch.

Assembled bearing and race diameter mm (in.)

	Inside	Outside
Assembled bearing	33.5 (1.319)	47.8 (1.882)

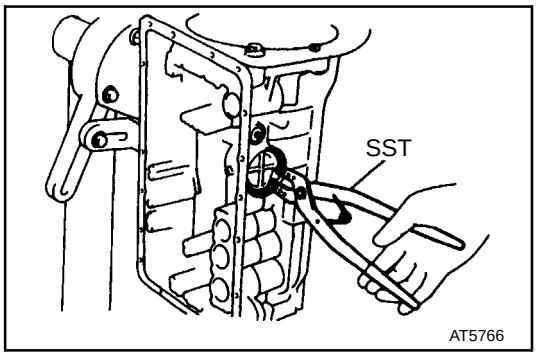

16. INSTALL 2ND COAST BRAKE COVER, PISTON ASSEMBLY AND SPRING

(a) Coat 2 new O-rings with ATF and install them to the cover.

(b) Install the spring, piston assembly and cover to the case.

(c) Using SST, install the snap ring.

SST 09350-30020 (09350-07060)

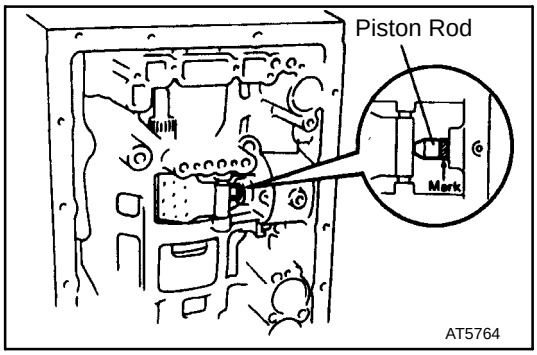

17. CHECK PISTON ROD STROKE OF 2ND COAST BRAKE

(a) Place a mark on the 2nd coast brake piston rod.

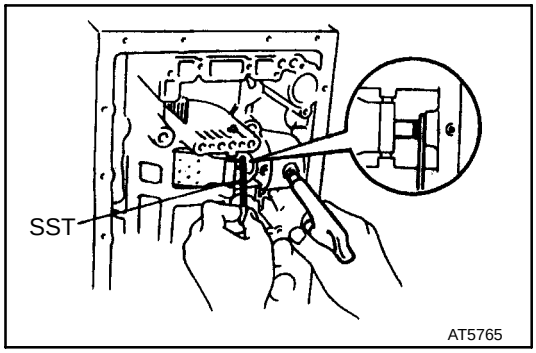

(b) Using SST, measure the stroke while applying and releasing compressed air (392 - 785 kPa, 4 - 8 kgf/cm^2, 57 - 114 psi).

SST 09240-00020

Piston rod stroke: 1.5 - 3.0 mm (0.059 - 0.118 in.)

If it is still more than standard value, replace the brake band with a new one.

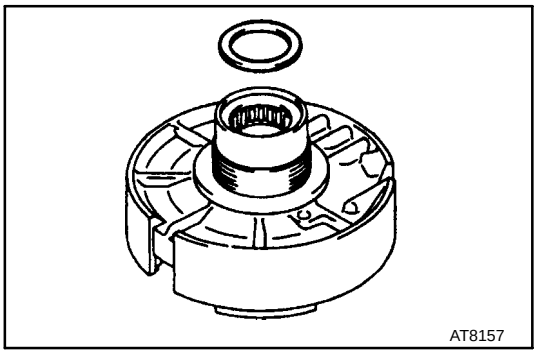

18. INSTALL O/D SUPPORT ASSEMBLY

(a) Coat the race with petroleum jelly and install it onto the O/D support assembly.

Race diameter mm (in.)

	Inside	Outside
Race	37.0 (1.457)	51.0 (2.008)

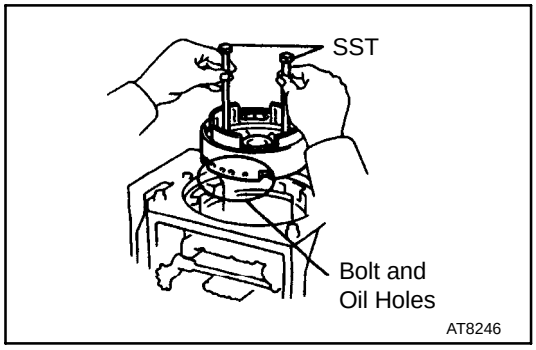

(b) Using 2 bolts of SST, aim the bolt and oil holes of the O/D support toward the valve body side, and align them with the bolt holes of the transmission case and insert.

SST 09350-30020 (09350-07020)

(c) Temporarily tighten the 2 bolts.

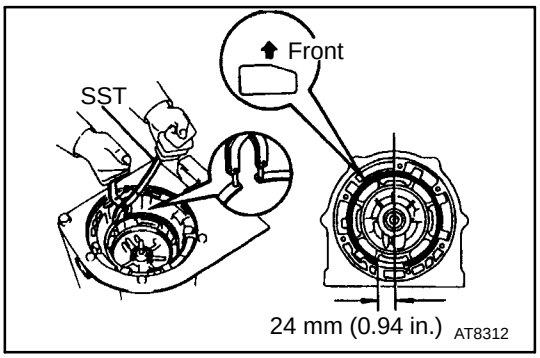

(d) Using SST, install the snap ring.

SST 09350-30020 (09350-07060)

HINT: Install the snap ring open end toward the valve body.

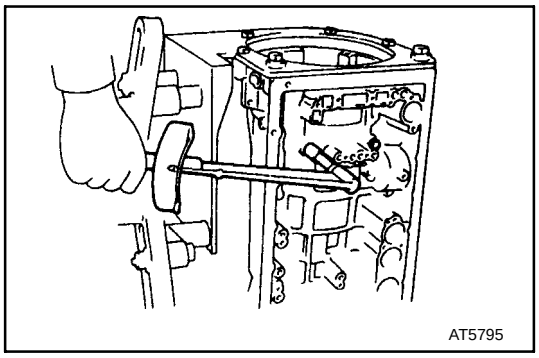

(e) Torque the 2 bolts.

Torque: 25 N-m (260 kgf-cm, 19 ft-lbf)

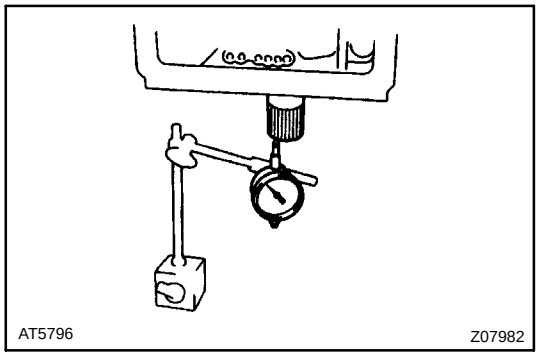

19. CHECK OUTPUT SHAFT

(a) Using a dial indicator, measure the end play of the output shaft with hand.

End play: 0.27 - 0.86 mm (0.0106 - 0.0339 in.)

If the values are non-standard, check for an improper installation.

(b) Check to see that output shaft rotates smoothly.

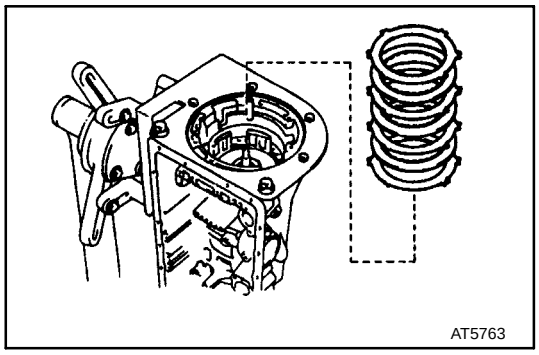

20. INSTALL FLANGES, PLATES AND DISCS OF O/D BRAKE

(a) Install the 4.0 mm (0.157 in.) thick flange (flat ring) with the rounded edge side of the flange facing the discs.

(b) Install the plates and discs.
Install in order: P = Plate D = Disc
D-P-D-P-D-P-D-P-D

(c) Install the flange (stepped ring) with the flat side of the flange facing the disc.

(d) Using a screwdriver, install the snap ring.

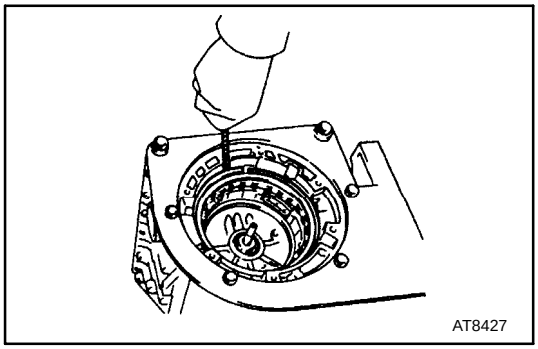

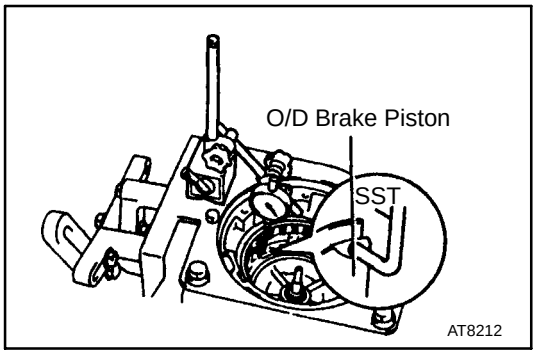

21. CHECK PISTON STROKE OF O/D BRAKE

(a) Place SST and a dial indicator onto the O/D brake piston.

SST 09350-30020 (09350-06120)

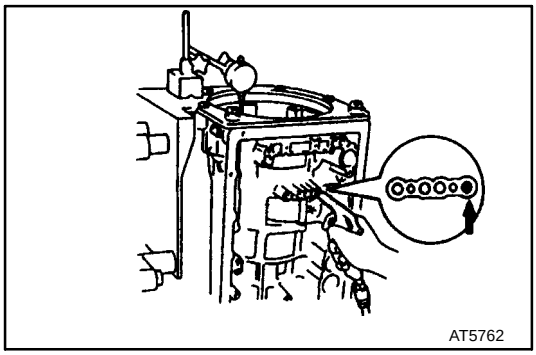

(b) Measure stroke while applying and releasing compressed air (392 - 785 kPa, 4 - 8 kgf/cm^2, 57 - 114 psi).

Piston stroke: 1.75 - 2.05 mm (0.0689 - 0.0807 in.)

If the piston stroke is less than the limit, parts may have been assembled incorrectly, check and reassemble again.

If the piston stroke is non-standard, select another flange.

HINT: There are 7 different thicknesses for the flange.

Flange thickness

mm (in.)

No.	Thickness	No.	Thickness
77	3.3 (0.130)	81	3.8 (0.150)
78	3.5 (0.138)	82	3.9 (0.154)
79	3.6 (0.142)	None	4.0 (0.157)
80	3.7 (0.146)	–	–

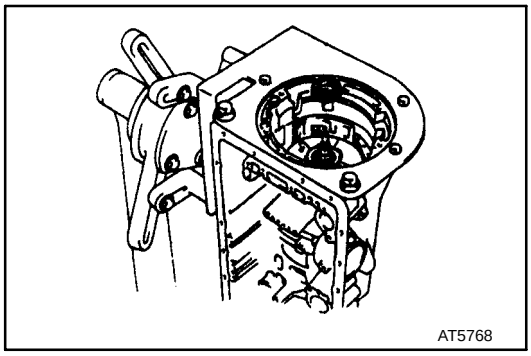

22. INSTALL O/D PLANETARY GEAR UNIT WITH O/D DIRECT CLUTCH AND ONE-WAY CLUTCH

(a) Coat the assembled bearing and race with petroleum jelly and install it onto the O/D support.

Assembled bearing and race diameter mm (in.)

	Inside	Outside
Assembled bearing	33.6 (1.323)	50.3 (1.980)

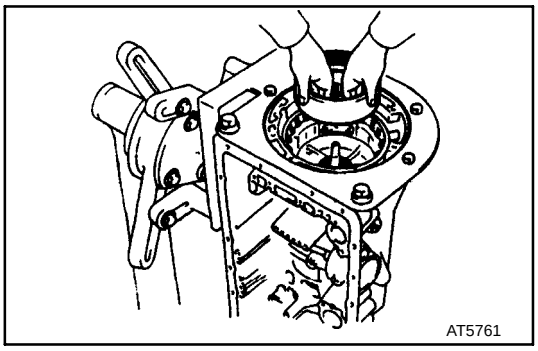

(b) Install the O/D planetary ring gear.

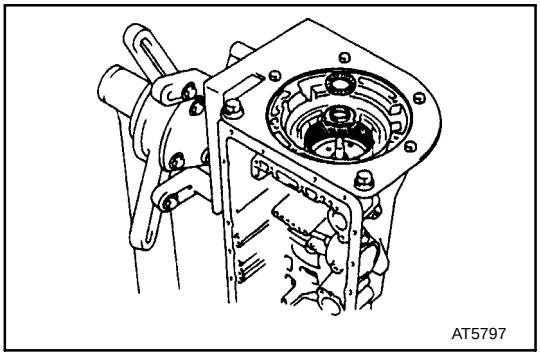

(c) Coat the bearing and race with petroleum jelly and install them onto the planetary ring gear.

Bearing and race diameter mm (in.)

	Inside	Outside
Bearing	25.9 (1.020)	47.0 (1.850)
Race	24.0 (0.945)	48.0 (1.890)

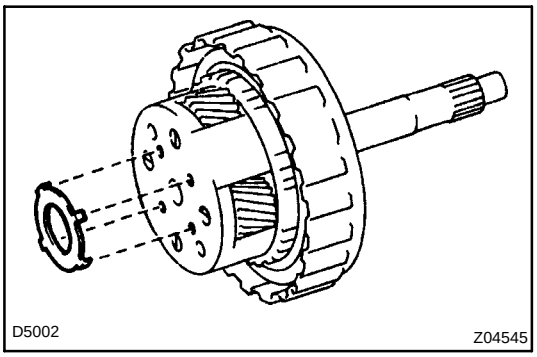

(d) Coat the race with petroleum jelly and install it onto the planetary gear.

Race diameter mm (in.)

	Inside	Outside
Race	27.2 (1.071)	42.0 (1.654)

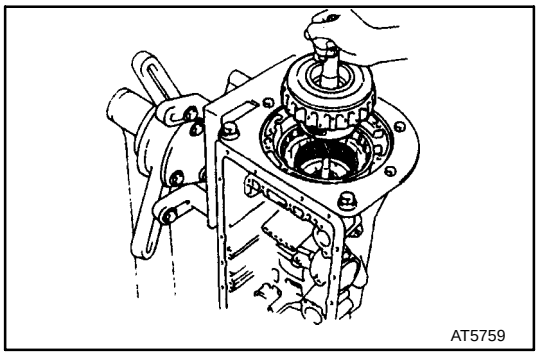

(e) Install the O/D planetary gear with the O/D direct clutch and one-way clutch.

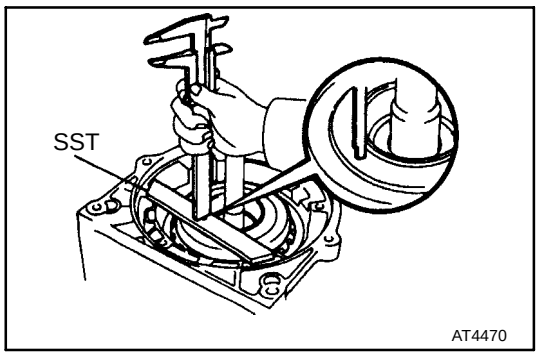

(f) Place SST on the transmission case.

SST 09350-36010 (09350-06090)

(g) Using calipers, measure distance between the tops of SST and the clutch drum.

Standard distance:

15.5 - 16.5 mm (0.610 - 0.650 in.)

If the values are non-standard, check for an improper installation.

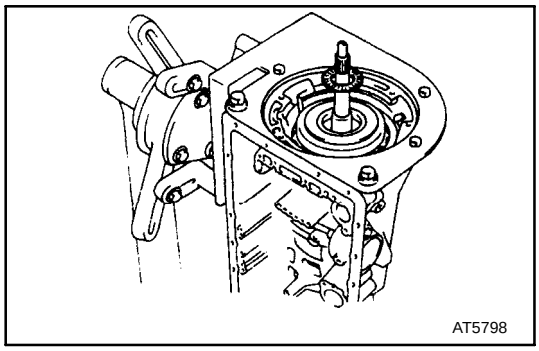

(h) Coat the assembled bearing and race with petroleum jelly and install it onto the O/D direct clutch.

Assembled bearing and race diameter mm (in.)

	Inside	Outside
Assembled bearing	28.8 (1.134)	50.4 (1.984)

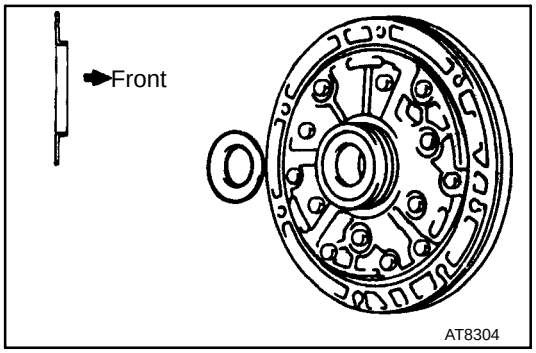

23. INSTALL OIL PUMP INTO CASE

(a) Coat the race with petroleum jelly and install it onto the oil pump.

Bearing diameter mm (in.)

	Inside	Outside
Race	28.1 (1.106)	47.5 (1.870)

(b) Coat a new O-ring with ATF and install it around the pump body.

(c) Place the oil pump through the input shaft, and align the bolt holes of the pump body with the transmission case.

(d) Hold the input shaft, and lightly press the oil pump body to slide the oil seal rings into the O/D direct clutch drum.

NOTICE: Do not push on the oil pump strongly, or the oil seal ring will stick to the direct clutch drum.

(e) Install the 7 bolts.

Torque: 22 N-m (220 kgf-cm, 16 ft-lbf)

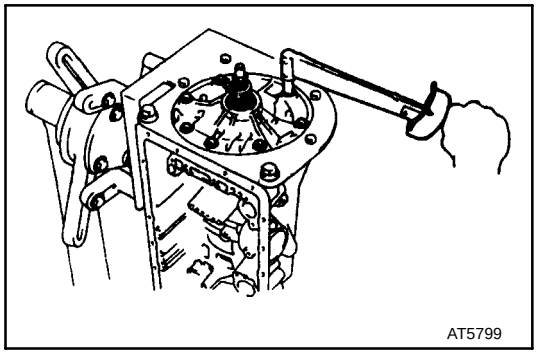

24. CHECK INPUT SHAFT ROTATION

Make sure the input shaft rotates smoothly.

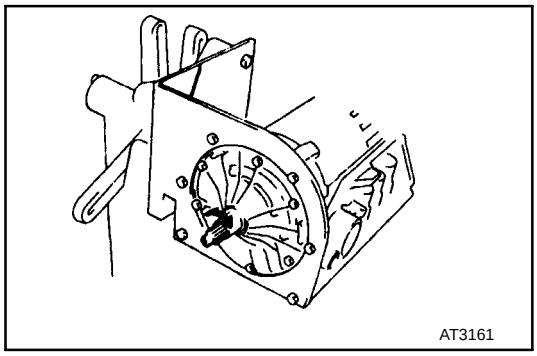

25. INDIVIDUAL PISTON OPERATION INSPECTION

Check for the sound of operation while applying compressed air into the oil hole indicated in the illustration.
HINT: When inspecting the O/D direct clutch, check with the C_0 accumulator piston hole closed.
If there is no noise, disassemble and check the installation condition of the parts.

(1) O/D direct clutch

(2) Direct clutch

(3) Forward clutch

(4) O/D brake

(5) 2nd coast brake

(6) 2nd brake

(7) 1st and reverse brake

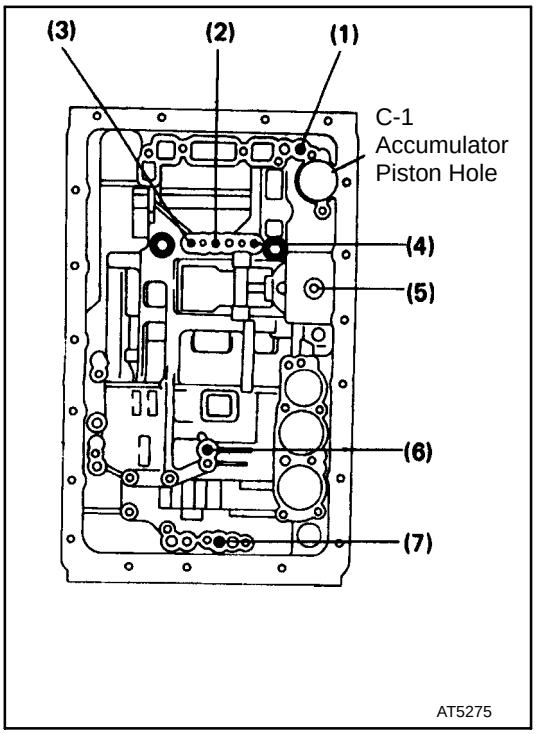

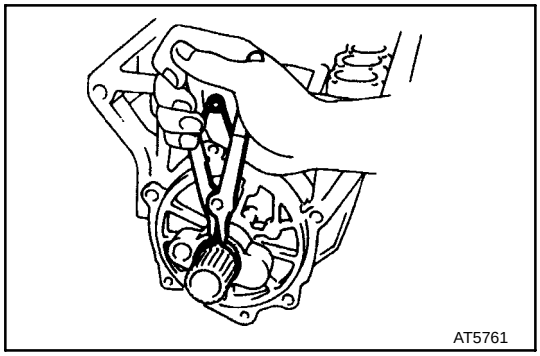

26. INSTALL SPEED SENSOR ROTOR AND KEY

(a) Install the key on the output shaft.

(b) Align the groove of the sensor rotor with the key, install the sensor rotor.

(c) Using snap ring pliers, install the snap ring.

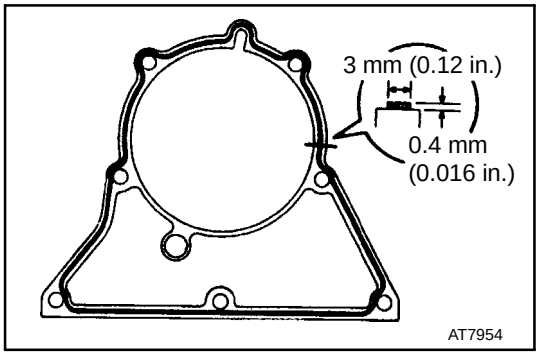

27. INSTALL TRANSFER CASE

(a) Clean contacting surface of any residual packing material using gasoline alcohol.

(b) Apply FIPG to the case.

FIPG: Part No. 08826 - 00090, THREE BOND 1281 or equivalent

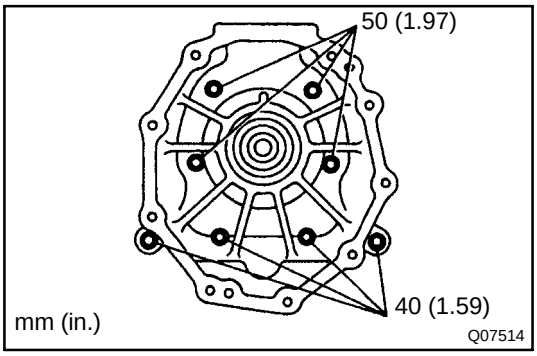

(c) Install the case and torque the 8 bolts.

Torque: 34 N-m (345 kgf-cm, 25 ft-lbf)

HINT: Each bolt length is indicated in the illustration.

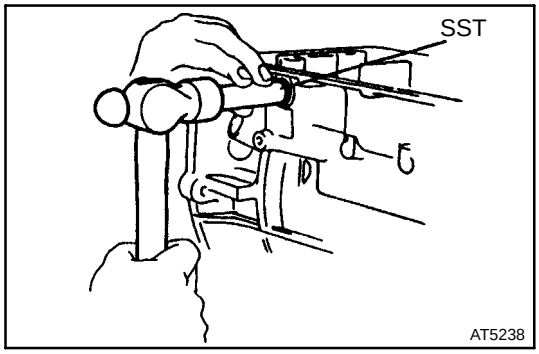

28. INSTALL MANUAL VALVE LEVER, SHAFT AND OIL SEALS

(a) Using SST and a hammer, drive in 2 new oil seals.

SST 09350-30020 (09350-07110)

(b) Coat an oil seal lip with MP grease.

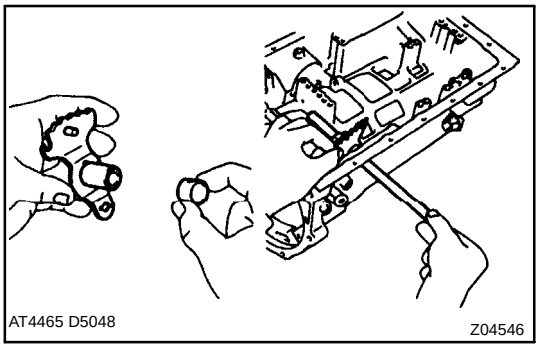

(c) Install a new spacer to the manual valve lever.

(d) Install the manual valve lever shaft to the transmission case through the manual valve lever.

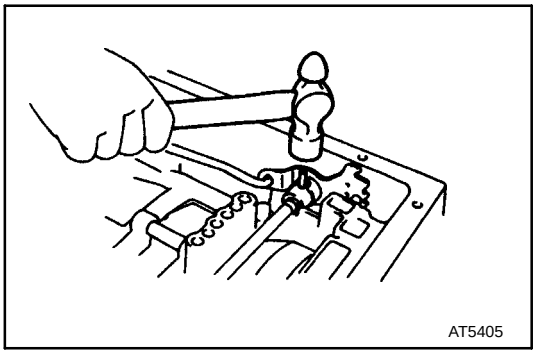

(e) Using a hammer, drive in a new spring pin.

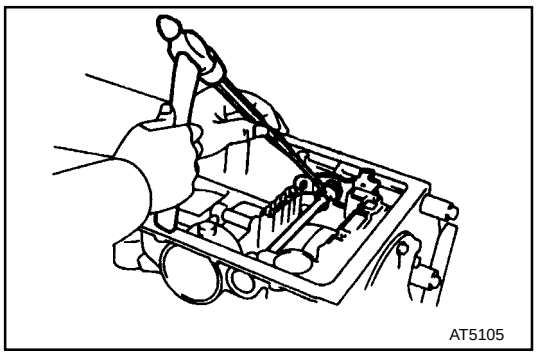

(f) Match the manual valve lever indentation with the spacer hole and caulk them the punch.

(g) Make sure the shaft rotates smoothly.

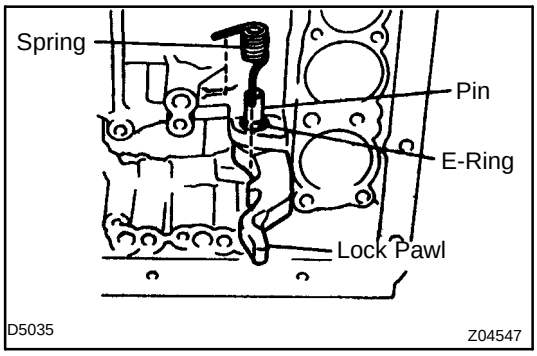

29. INSTALL PARKING LOCK PAWL AND ROD

(a) Install the E-ring to the shaft.

(b) Install the parking dock pawl, shaft and spring.

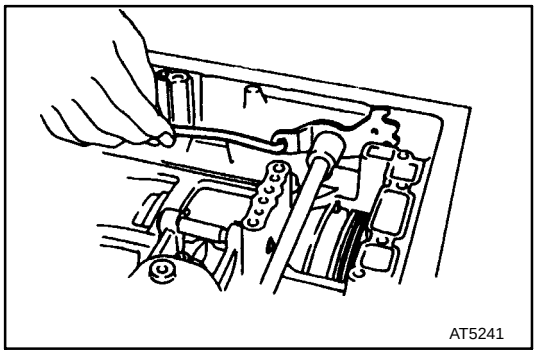

(c) Connect the parking lock rod to the manual valve lever.

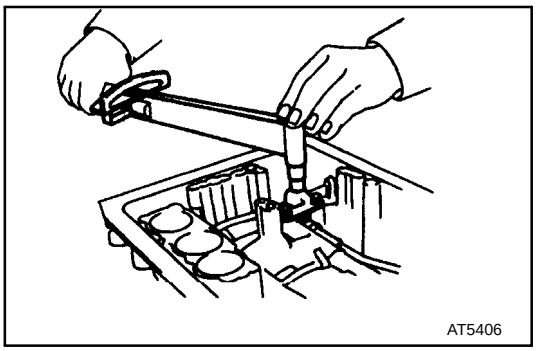

(d) Place the parking lock pawl bracket onto the transmission case and torque the 3 bolts.

Torque: 7.4 N-m (75 kgf-cm, 65 in.-lbf)

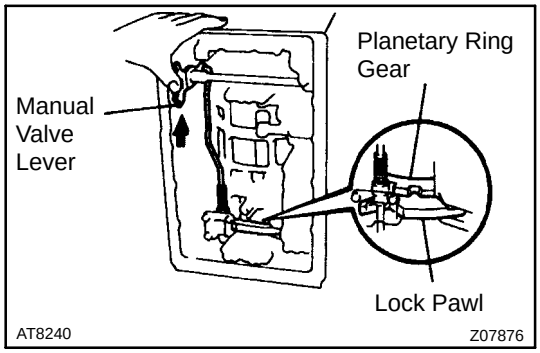

(e) Shift the manual valve lever to the P position, and confirm the planetary ring gear is correctly locked up by the lock pawl.

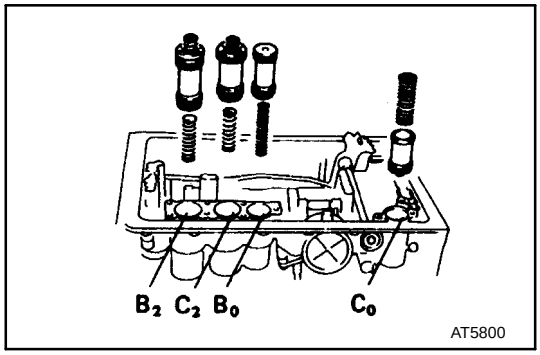

30. INSTALL ACCUMULATOR SPRINGS AND PISTONS

(a) Coat new O-rings with ATF and install them to the pistons.

(b) Install the 4 springs and pistons to the bore.

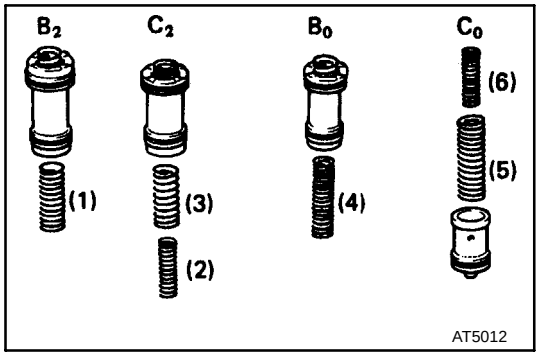

mm (in.)

Spring		Free length	Color
(1) B_2		72.6 (2.858)	Light Gray
(2) C_2	Inner	42.1 (1.657)	Pink
(3) C_2	Outer	73.3 (2.886)	White & Red
(4) B_0		62.0 (2.441)	Green
(5) C_0	Inner	46.0 (1.811)	Yellow
(6) C_0	Outer	74.6 (2.937)	Orange

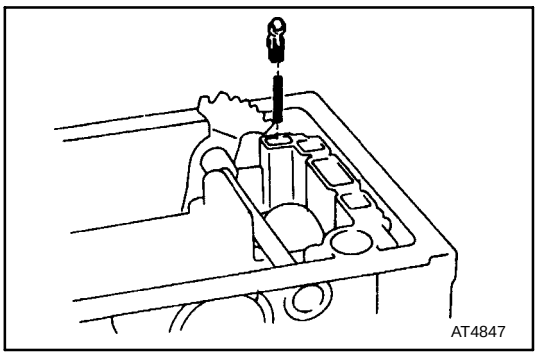

31. INSTALL CHECK BALL BODY AND SPRING

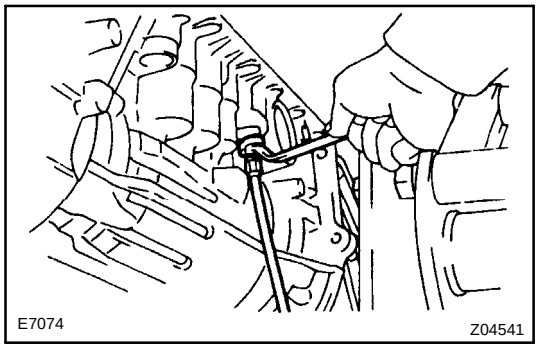

32. INSTALL THROTTLE CABLE

(a) Coat a new O-ring with ATF and install it to the cable.

(b) Install the cable to the case.

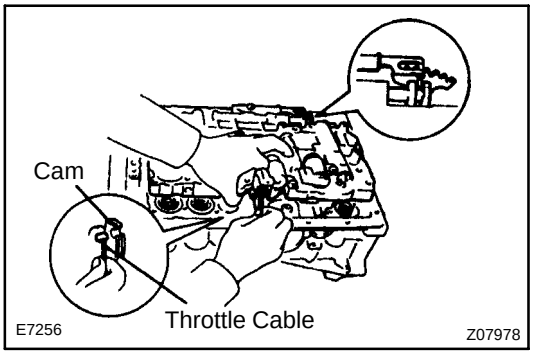

33. INSTALL VALVE BODY

(a) Align the groove of the manual valve to pin of the lever.

(b) Connect the throttle cable to the cam.

(c) Confirm the springs into the accumulator pistons are installed correctly.

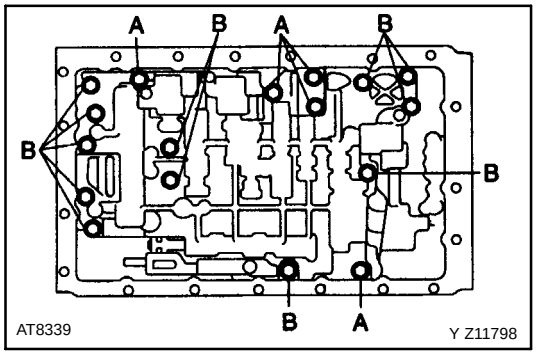

(d) Install the 17 bolts.

Torque: 10 N-m (100 kgf-cm, 7 ft-lbf)

HINT: Each bolt length is indicated in the illustration.

Bolt length:

Bolt A: 23 mm (0.91 in.)
Bolt B: 32 mm (1.26 in.)

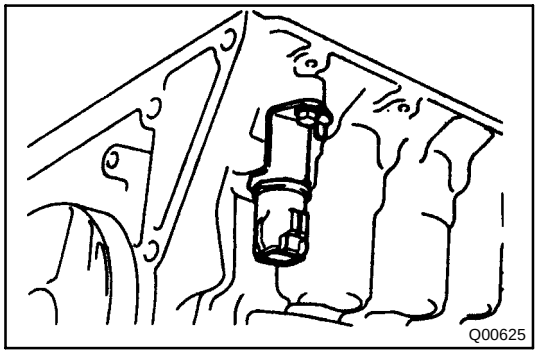

34. INSTALL TRANSMISSION SOLENOID WIRING

(a) Cost a new O-ring with ATF and install it to the grommet.

(b) Insert the solenoid wiring to the case and install the stopper plate.

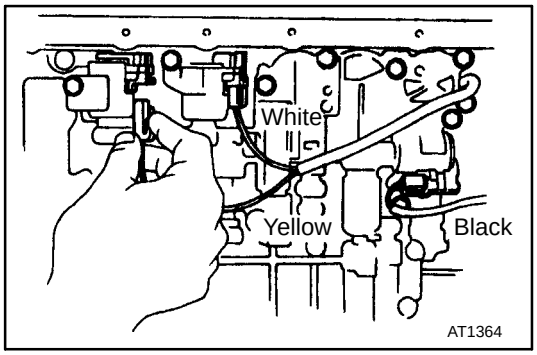

(c) Connect the connectors to the shift solenoid valve No. 1, No. 2 and SL.

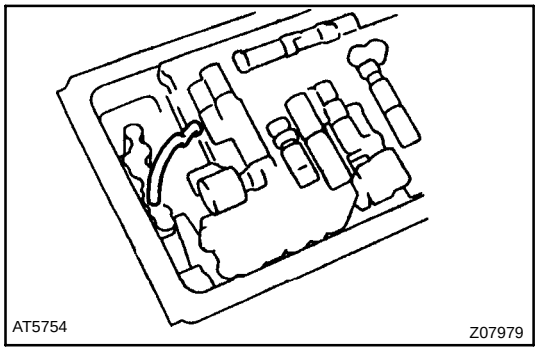

35. INSTALL OIL PIPE

Using a plastic hammer, install the pipe into position.

NOTICE: Be careful not to bend or damage the pipe.

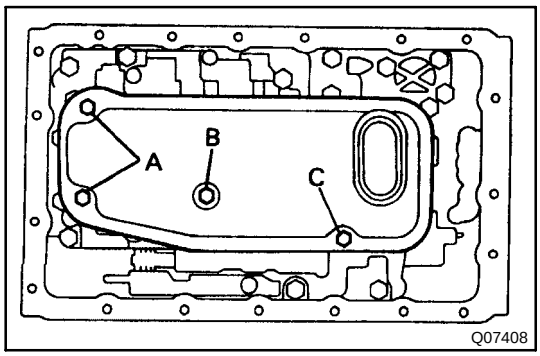

36. INSTALL OIL STRAINER AND GASKETS

Install the oil strainer and torque the 4 bolts.

Torque: 10 N-m (100 kgf-cm, 7 ft-lbf)

Bolt length:

Bolt A: 16 mm (0.63 in.)
Bolt B: 20 mm (0.79 in.)
Bolt C: 28 mm (1.10 in.)

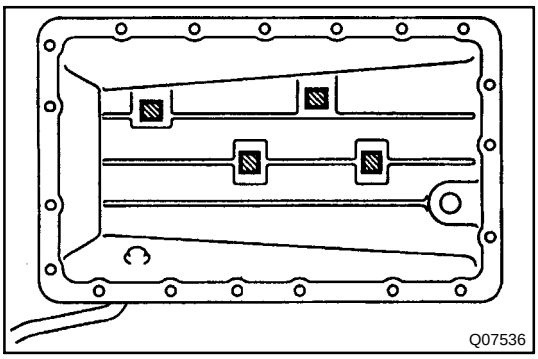

37. INSTALL OIL PAN

(a) Install the 3 magnets.

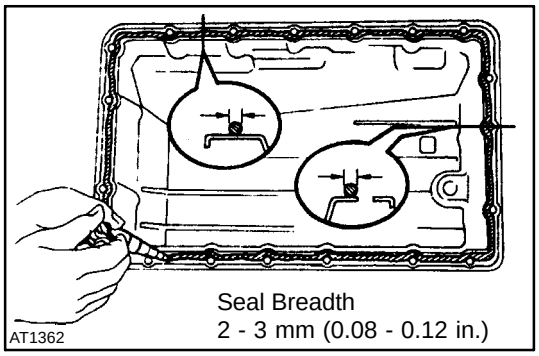

(b) Remove any packing material and be careful not to drop oil on the contacting surfaces of the transmission case and oil pan.

(c) Apply FIPG to the oil pan.

FIPG: Part No. 08826-00090, THREE BOND 1281 or equivalent

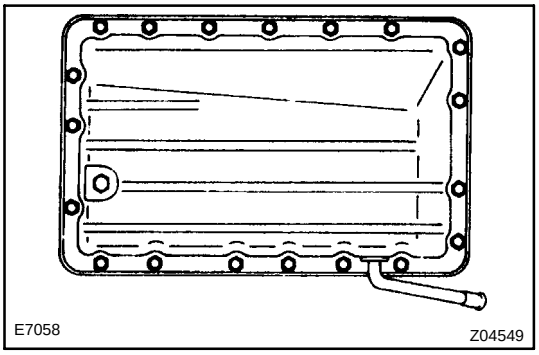

(d) Install and torque the 11 bolts.

Torque: 7.4 N-m (75 kgf-cm, 65 in.-lbf)

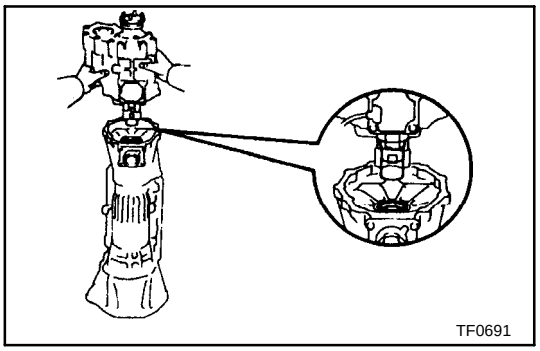

38. INSTALL TRANSFER AND PROPELLER SHAFT UPPER DUST COVER TO TRANSMISSION WITH NEW GASKET

(a) Apply MP grease to the adaptor oil seal.

(b) Place a new gasket to the transfer adaptor.

(c) Install the transfer to the transmission.

HINT: Take care not to damage the oil seal by the input gear spline when installing the transfer.

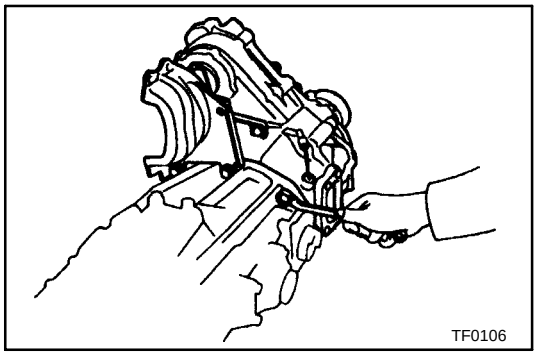

(d) Install and torque the bolts with the propeller shaft upper dust cover.

Torque: 36 N-m (370 kgf-cm, 27 ft-lbf)

(e) Install the dust cover bolt to the bracket.

Torque: 23 N-m (230 kgf-cm, 17 ft-lbf)

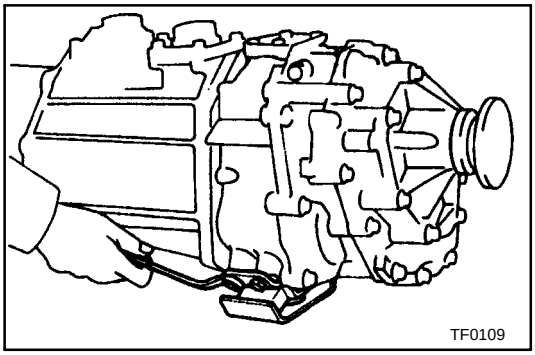

39. INSTALL ENGINE REAR MOUNTING

Torque: 25 N-m (260 kgf-cm, 19 ft-lbf)

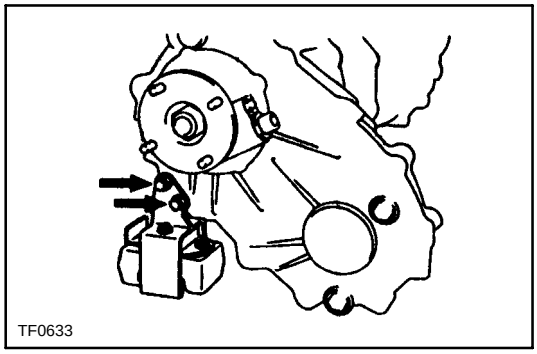

40. INSTALL DYNAMIC DAMPER

Torque: 37 N-m (380 kgf-cm, 27 ft-lbf)

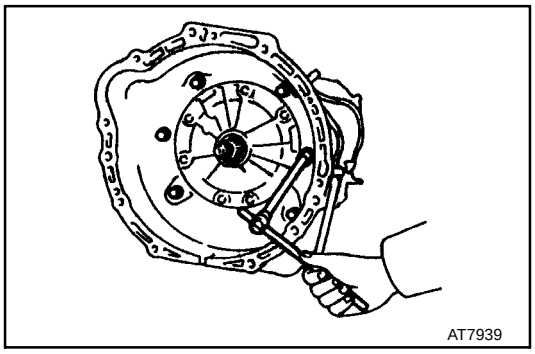

41. INSTALL TRANSMISSION HOUSING

Install and torque the 6 bolts.

Torque:

10 mm bolt	**34 N-m (345 kgf-cm, 25 ft-lbf)**
14 mm bolt	**57 N-m (580 kgf-cm, 42 ft-lbf)**

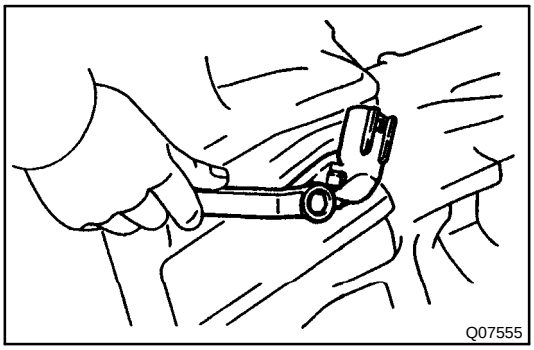

42. INSTALL VEHICLE SPEED SENSOR

(a) Coat a new O-ring with ATF and install it to the sensor.

(b) Install the vehicle speed sensor.

(c) Install the stopper plate.

Torque: 16 N-m (160 kgf-cm, 12 ft-lbf)

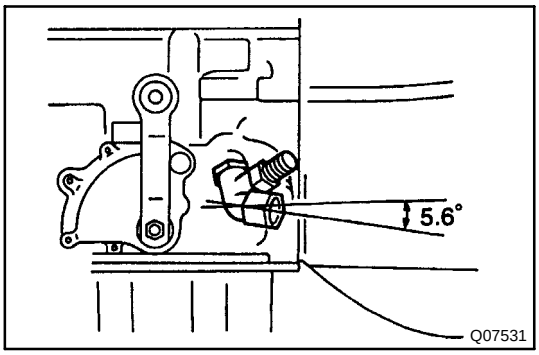

43. INSTALL UNION AND ELBOW

(a) Coat the new O-rings with ATF and install them to the union and elbow.

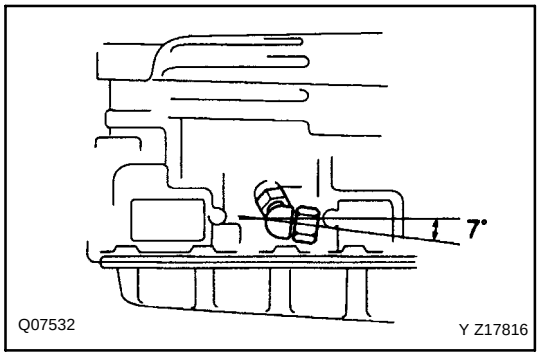

(b) Install the rear elbow.

Torque: 29 N-m (300 kgf-cm, 22 ft-lbf)

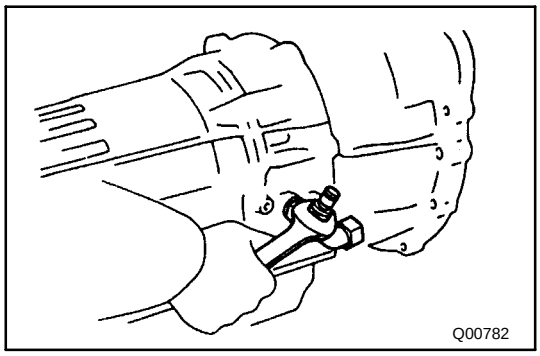

44. INSTALL ATF TEMPERATURE SENSOR

(a) Coat a new O-ring with ATF and install it to the sensor.

(b) Install and torque the ATF temperature sensor.

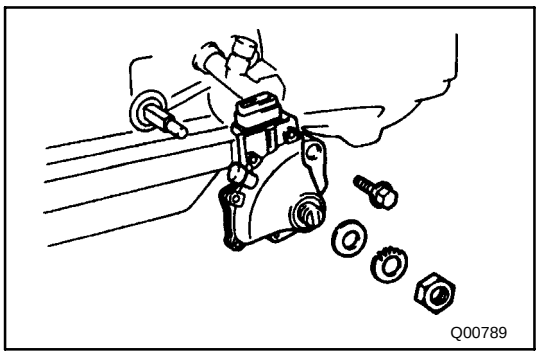

45. INSTALL PARK/NEUTRAL POSITION SWITCH

(a) Install the park/ neutral position switch onto the manual valve lever shaft and temporarily tighten the adjusting bolt.

(b) Install the grommet and a new lock washer. Install and torque the nut.

Torque: 6.9 N-m (70 kgf-cm, 61 in.-lbf)

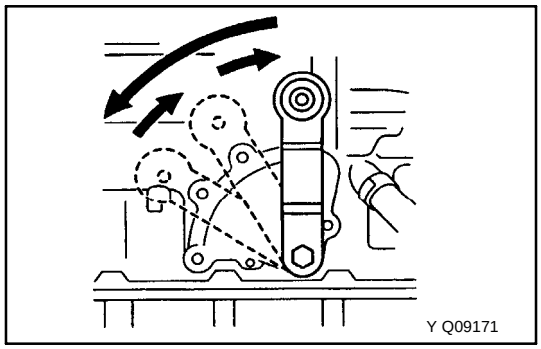

(c) Using the control shaft lever, fully turn the manual lever shaft back and return 2 notches. It is now in neutral.

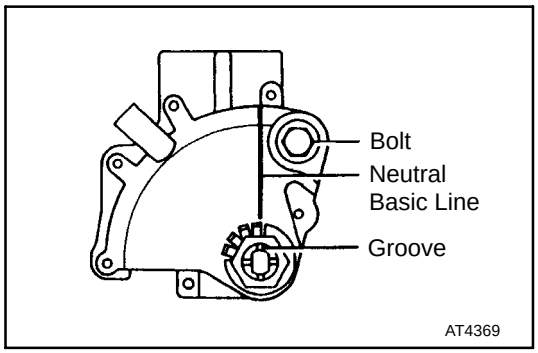

(d) Align the neutral basic line and the switch groove, and tighten the adjusting bolt.

Torque: 13 N-m (130 kgf-cm, 9 ft-lbf)

HINT: Bend at least 2 of the lock washer tabs.

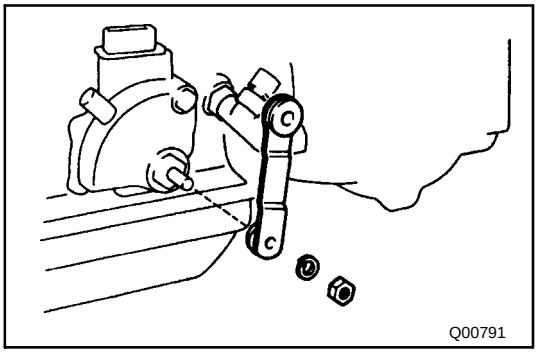

47. INSTALL TRANSMISSION CONTROL SHAFT LEVER

Torque: 16 N-m (160 kgf-cm, 12 ft-lbf)

Welcome to the growing group of value–conscious people who drive Lexus vehicles. We are proud of the advanced engineering and quality construction of each vehicle we build.

This Owner's Manual explains the features of your new Lexus. Please read it and follow the instructions carefully so that you can enjoy many years of safe motoring.

When it comes to service, remember that your Lexus dealer knows your vehicle best and is interested in your complete satisfaction. Your Lexus dealer will provide quality maintenance and any other assistance you may require.

If there is not a Lexus dealer near you, or you need emergency assistance for any reason, please call the following number:

U.S. OWNERS

- When traveling in the U.S. mainland or Canada:

  Lexus Roadside Assistance 1–800–25–LEXUS (Toll–Free)
  (1–800–255–3987)

- HAWAII:

  Lexus Customer Service Assistance 1–800–25–LEXUS (Toll–Free)
  (1–800–255–3987)

Please leave this Owner's Manual in this vehicle at the time of resale. The next owner will need this information also.

All information and specifications in this manual are current at the time of printing. However, because of the Lexus policy of continued product improvement, we reserve the right to make changes at any time without notice.

Please note that this manual applies to all models and explains all equipment, including options. Therefore, you may find some explanations for equipment not installed on your vehicle.

TOYOTA MOTOR CORPORATION

New vehicle warranty

Your new vehicle is covered by the following Lexus limited warranties:

- New vehicle warranty
- Emission control systems warranty
- Others

For further information, please refer to the separate “Owner’s Guide”, “Owner’s Manual Supplement” or “Warranty Booklet”.

Your responsibility for maintenance

It is the owner’s responsibility to make sure the specified maintenance is performed. Section 5 of this Owner’s Manual gives details of these maintenance requirements. Included in Section 6 is general maintenance. For scheduled maintenance information, please refer to the separate “Owner’s Manual Supplement/Maintenance Schedule”.

Accessories, spare parts and modification of your Lexus

A wide variety of non–genuine spare parts and accessories for Lexus vehicles are currently available in the market. You should know that Toyota does not warrant these products and is not responsible either for their performance, repair or replacement, or for any damage they may cause to, or adverse effect they may have on, your Lexus vehicle.

This vehicle should not be modified with non–genuine Lexus products. Modification with non–genuine Lexus products could affect its performance, safety or durability, and may even violate governmental regulations. In addition, damage or performance problems resulting from the modification may not be covered under warranty.

Installation of a mobile two–way radio system

As the installation of a mobile two–way radio system in your vehicle could affect electronic systems such as the multiport fuel injection system/sequential multiport fuel injection system, cruise control system, anti–lock brake system and SRS airbag system, be sure to check with your Lexus dealer for precautionary measures or special instructions regarding installation.

Scrapping of your Lexus

The SRS airbag device in your Lexus contains explosive chemicals. If the vehicle is scrapped with the airbags and left as they are, it may cause an accident such as a fire. Be sure to have the systems of the SRS airbags removed and disposed of by a qualified service shop or by your Lexus dealer before you scrap your vehicle.

On–pavement and off–road driving tips

This vehicle will handle and maneuver differently from an ordinary passenger car because it is also designed for off–road use. As with other vehicles of this type, failure to operate this vehicle correctly may result in loss of control or an accident. Be sure to read “Off–road vehicle precautions” on page 150 and “Off–road driving precautions” on page 152.

HOW TO USE THIS MANUAL

The contents of this manual are explained briefly on this page to help you make the best use of the manual. Please read this page and the rest of the Owner's Manual carefully to make sure you fully understand the operation of your vehicle.

This will help you enjoy safe and comfortable driving.

TABLE OF CONTENTS

The table of contents and the pictorial index provide easy reference to the appropriate pages.

BASIC OPERATION – QUICK REFERENCE

Operation of basic equipment is briefly explained in an easily understandable way for quick reference.

SECTION 1 – INSTRUMENTS AND CONTROLS

The vehicle's equipment is divided into the 7 groups listed below. Use of the equipment is explained, including any points you should pay particular attention to.

1. **Keys and doors**
2. **Switches**
3. **Gauges, meters and service reminder indicators**
4. **Interior equipment**
5. **Exterior equipment**
6. **Comfort adjustment**
7. **Theft deterrent**

SECTION 2 – AIR CONDITIONING AND AUDIO

The features of the vehicle's air conditioning and audio are explained in detail. Be sure to read this section so that you can make full use of them.

SECTION 3 – STARTING AND DRIVING

Starting the engine, driving, stopping, operation of features affecting vehicle handling, hints on vehicle safety and safe driving techniques are all explained. Please read everything in this section, and remember – drive safely!

SECTION 4 – IN CASE OF AN EMERGENCY

This section explains what to do in the event of an urgent situation such as the engine not starting or getting a flat tire, etc. If such a problem occurs, check the contents of this Owner's Manual and follow the instructions given.

SECTION 5 – MAINTENANCE

This section explains the importance of regular maintenance. Regular and periodic inspection and maintenance of your Lexus will help to keep your vehicle in its best condition.

SECTION 6 – SERVICE PROCEDURES AND SPECIFICATIONS

Simple maintenance procedure and service data are provided here for your reference should you wish to perform inspection and maintenance yourself.

INDEX

The page number is listed for each item in the Owner's Manual so that you can rapidly find the item and page you are searching for.

GAS STATION INFORMATION

The information you need to know for appropriate servicing at the gas station is provided here.

QUICK INDEX

This is designed so that you can quickly find the needed information when an urgent situation arises.

Safety symbol

In this manual, you will also see a circle with a slash through it. This means "Do not", "Do not do this", or "Do not let this happen".

Safety and vehicle damage warnings

In this manual you will see CAUTION and NOTICE warnings. These are used in the following ways:

CAUTION

This is a warning against something which may cause injury to people if the warning is ignored. You are informed what you must or must not do in order to avoid or reduce the risk to yourself and other people.

NOTICE

This is a warning against something which may cause damage to the vehicle or its equipment if the warning is ignored. You are informed what you must or must not do in order to avoid or reduce the risk of damage to your Lexus and its equipment.

Your Lexus Owner's Manual provides you with a considerable amount of information. To use this information most effectively, please take the time to familiarize yourself with the contents and use of the manual.

INSTRUMENT PANEL

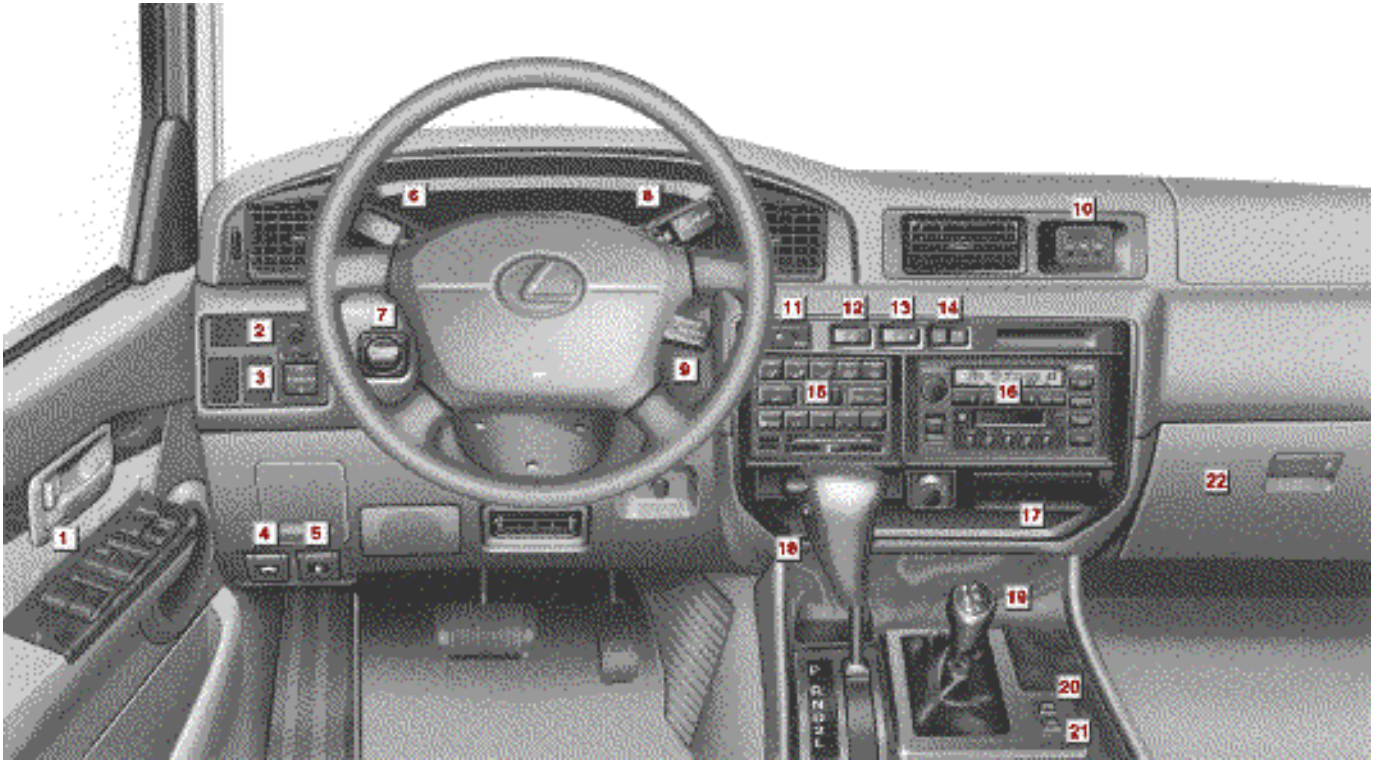

		Page
1	*Door lock switch and power window switches*	*12, 22*
2	*Instrument panel light control knob*	*34*
3	*Power rear view mirror control switch*	*58*
4	*Hood lock release lever*	*44*
5	*Fuel filler door opener*	*44*
6	*Headlight and turn signal switch*	*18*
7	*Front and rear differential lock switch*	*139*
8	*Windshield wiper and washer switch*	*19*
9	*Cruise control switch*	*141*
10	*Clock*	*38*
11	*Theft deterrent indicator light*	*84*
12	*Emergency flasher switch*	*24*
13	*Rear window defogger switch*	*21*
14	*Power antenna switch*	*103*
15	*Automatic air conditioning controls*	*90*
16	*Car audio*	*99*
17	*Ashtray*	*38*
18	*Automatic transmission selector lever*	*131*
19	*Four–wheel drive control lever*	*138*
20	*Driving pattern selector switch*	*133*
21	*Second start mode selector switch*	*137*
22	*Glovebox*	*39*

For detailed information, refer to the description given in each section.

INSTRUMENT CLUSTER

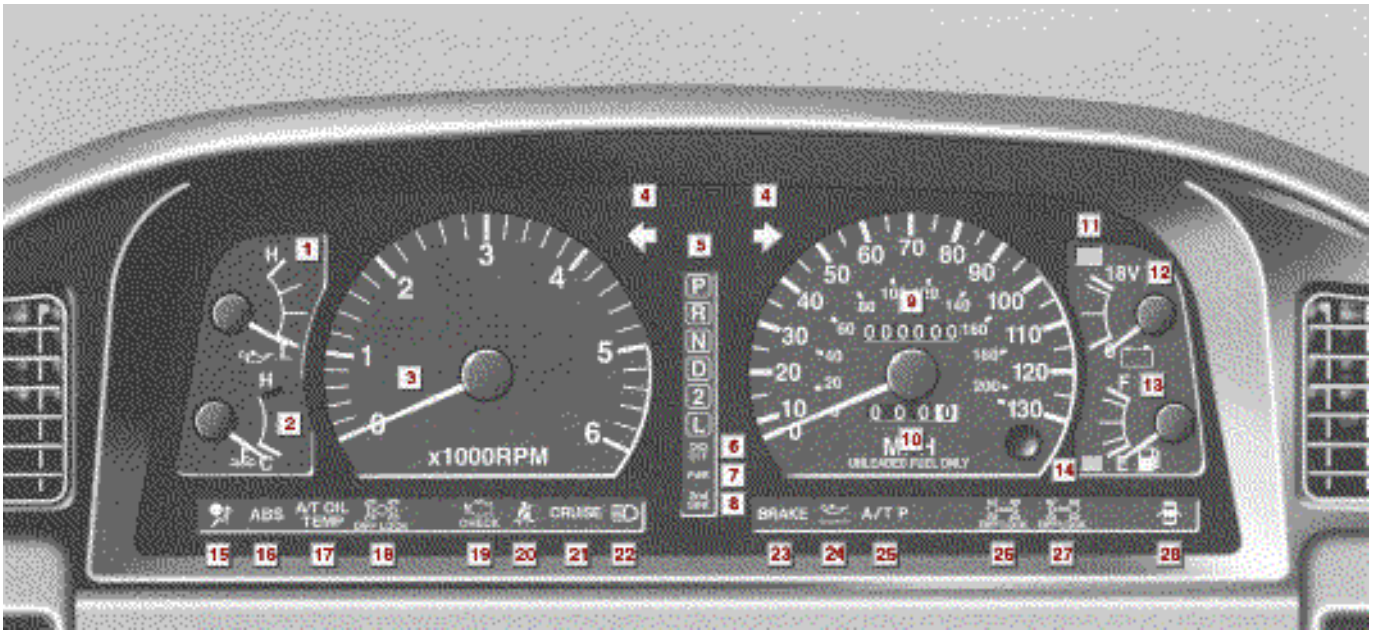

		Page
1	*Oil pressure gauge*	27
2	*Engine coolant temperature gauge*	26
3	*Tachometer*	28
4	*Turn signal indicator light*	18
5	*Automatic transmission indicator lights*	131
6	*Overdrive–off indicator light*	133
7	*“PWR” mode indicator light*	133
8	*Automatic transmission second start indicator light*	137
9	*Odometer*	29
10	*Trip meter*	29
11	*Discharge warning light*	33
12	*Voltmeter*	28
13	*Fuel gauge*	26
14	*Low fuel level warning light*	33
15	*SRS airbag warning light*	31
16	*Anti–lock brake system warning light*	32
17	*Automatic transmission fluid temperature warning light*	32
18	*Center differential lock indicator light*	138
19	*Malfunction indicator lamp*	31
20	*Seat belt reminder light*	31
21	*Cruise control indicator light*	141
22	*Headlight high beam indicator light*	18
23	*Brake system warning light*	30
24	*Low engine oil level warning light*	31
25	*Unengaged “Park” warning light*	32
26	*Front differential lock indicator light*	140
27	*Rear differential lock indicator light*	139
28	*Open door warning light*	32

For detailed information, refer to the description given in each section.

SEAT AND STEERING WHEEL

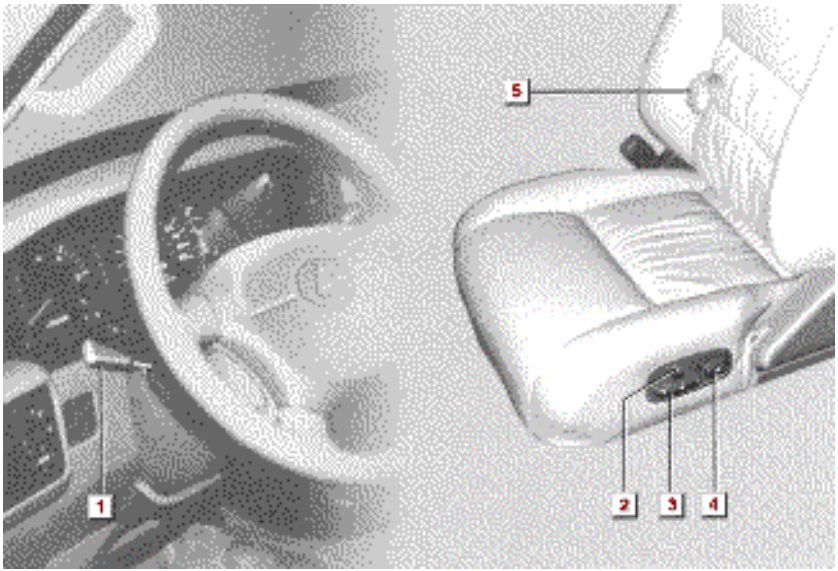

		Page
1	*Tilt steering adjustment lever*	*57*
2	*Seatback angle control switch*	*51, 56*
3	*Seat position, seat cushion angle and height control switch*	*51, 52*
4	*Lumbar support control switch*	*52*
5	*Side support control knob*	*53*

For detailed information, refer to the description given in each section.

EXTERIOR VIEW

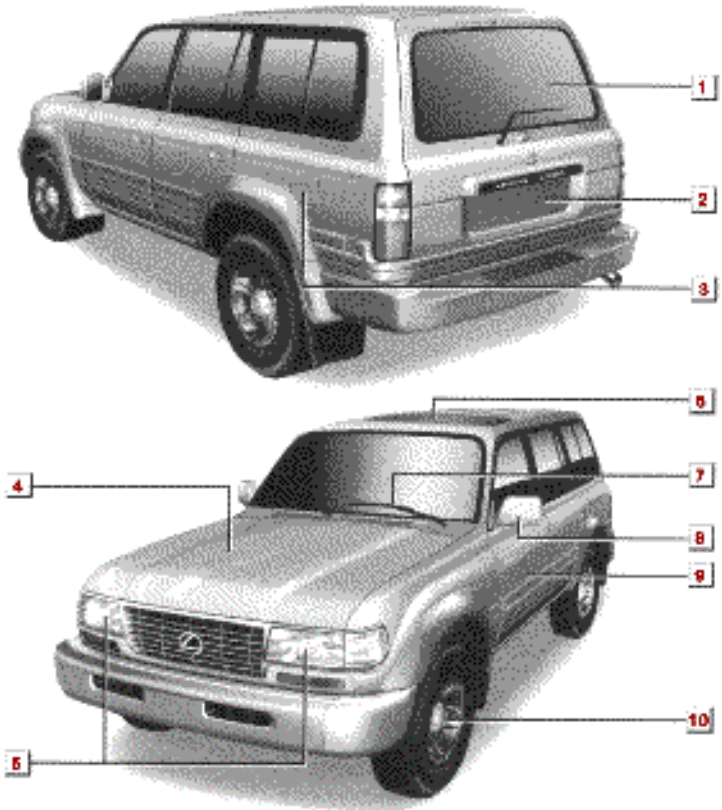

		Page
1	*Rear window defogger*	*21*
2	*Back door*	*14*
3	*Fuel filler door*	*44*
4	*Hood*	*44*
5	*Headlights*	*18, 235*
6	*Moon roof*	*45*
7	*Windshield wiper and washer*	*19, 233*
8	*Outside rear view mirror*	*58*
9	*Side door*	*11*
10	*Tire and wheel*	*213*

For detailed information, refer to the description given in each section.

BASIC OPERATION

QUICK REFERENCE

Driver's seat ---------- 2
Steering wheel ---------- 2
Automatic transmission ---------- 3
Headlight and turn signal switch ---------- 4
Wiper switch ---------- 4

1. DRIVER'S SEAT

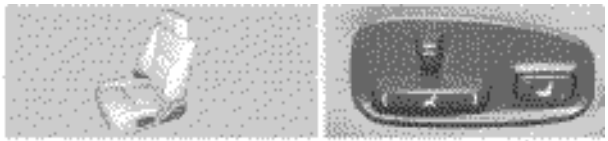

Seat adjustment

	Seat position		
	Seat cushion angle		
	Seat cushion height		
	Seatback angle		
	Lumbar support		
	Side support		
	Head restraint height		
	Head restraint angle		

2. STEERING WHEEL

• TILT STEERING WHEEL

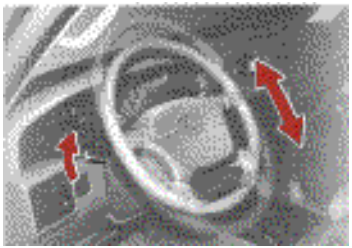

To tilt the steering wheel up or down to the desired angle:

1. Pull the lever up while holding the steering wheel.
2. Push or pull the steering wheel to the desired angle.
3. Release the lever.

3. AUTOMATIC TRANSMISSION

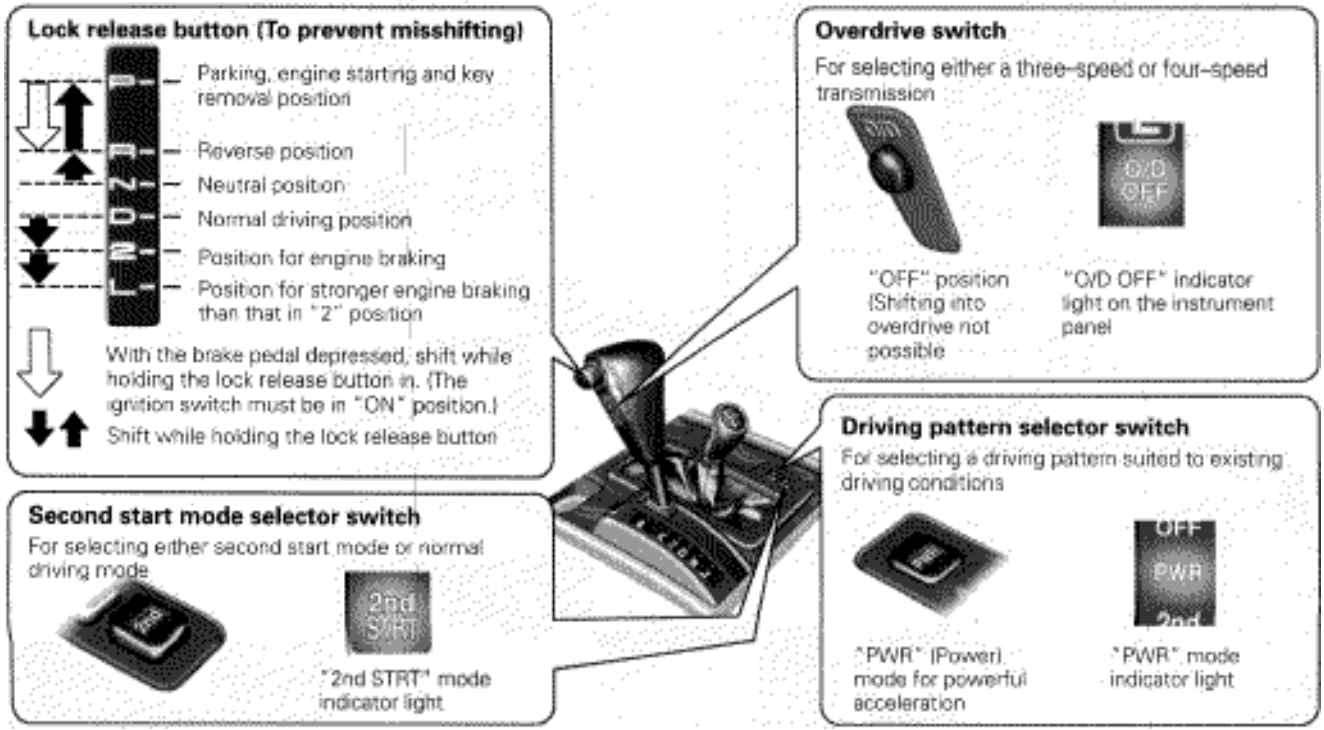

Note: When the cruise control is being used, even if you downshift the transmission, engine braking will not be applied because the cruise control is not cancelled. For the operation to decrease the vehicle speed, see page 143.

4. HEADLIGHT AND TURN SIGNAL SWITCH

- **HEADLIGHT SWITCH**

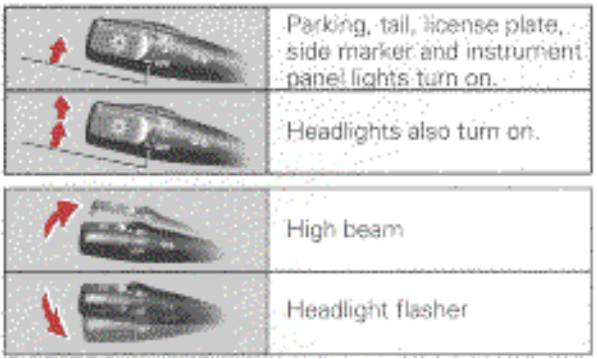

- **TURN SIGNAL SWITCH**

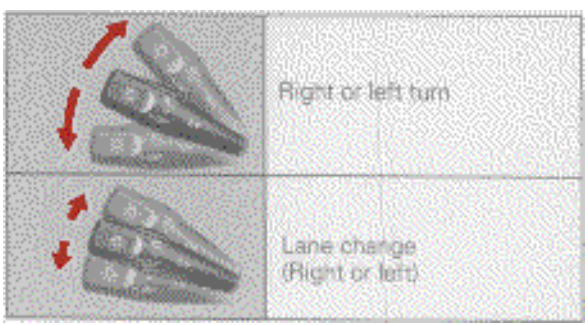

5. WIPER SWITCH

- **Front**

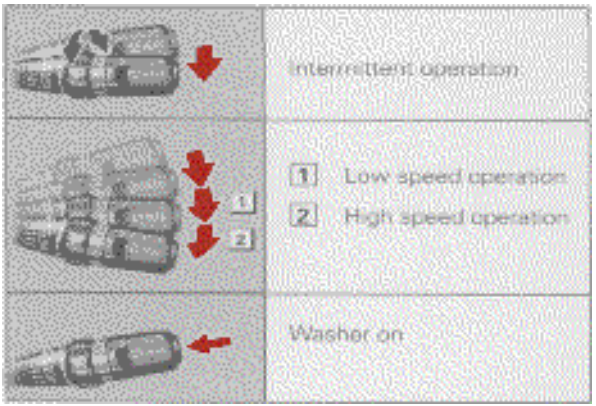

- **Rear**

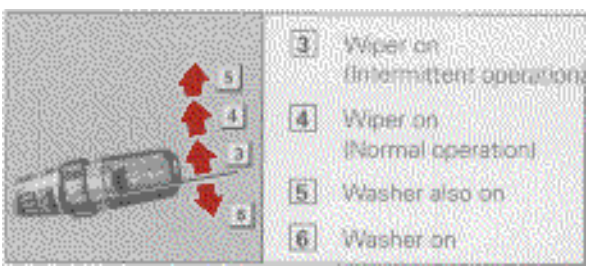

GAS STATION INFORMATION

- **Fuel selection:**
  UNLEADED gasoline, Research Octane Number 91 (Octane Rating 87) or higher
- **Fuel tank capacity:**
  95 L (25.1 gal., 20.9 Imp. gal.)
- **Engine oil:**
  API SH, Energy–Conserving II multigrade engine oil or ILSAC multigrade engine oil.
  Recommended oil viscosity – SAE 5W–30 if normal temperatures are below 38°C (100°F)
  Oil capacity: L (qt., Imp. qt.)
  Drain and refill
  with filter 7.4 (7.8, 6.5)
  without filter 6.9 (7.3, 6.1)
  See page 203 for detailed information.
- **Engine coolant:**
  Capacity: L (qt., Imp. qt.)
  with front heater 12.5 (13.2, 11.0)
  with front and rear heater 13.4 (14.2, 11.8)
  Coolant type– Ethylene–glycol coolant (Do not use alcohol coolant.)
  For checking the engine coolant, see page 205.
  For changing the engine coolant, see the label on the coolant reservoir.
- **Automatic transmission:**
  Fluid type – Automatic transmission fluid DEXRON®–II
- **Tire information:**
  See page 213 through 219 for detailed information.
- **Tire pressure:**
  Tire size: P275/70R16 114H

cold tires
kPa (kgf/cm^2 or bar, psi)

	Vehicle load up to 4 occupants	Vehicle loaded up to vehicle capacity weight
Front tires	220 (2.2, 32)	220 (2.2, 32)
Rear tires	220 (2.2, 32)	220 (2.2, 32)

For sustained high speeds above 160 km/h (100 mph), in countries where such speeds are permitted by law, add 80 kPa (0.9 kgf/cm^2, 0.8 bar, 12 psi) to the front tires and rear tires, but never exceed the maximum cold tire pressure molded on the tire sidewall.

INSTRUMENTS AND CONTROLS

Keys and doors

Keys ---------- 6
Wireless remote control transmitter ---------- 7
Ignition switch–activated automatic door lock/unlock --- 10
Side doors ---------- 11
Side windows ---------- 13
Back door ---------- 14

KEYS

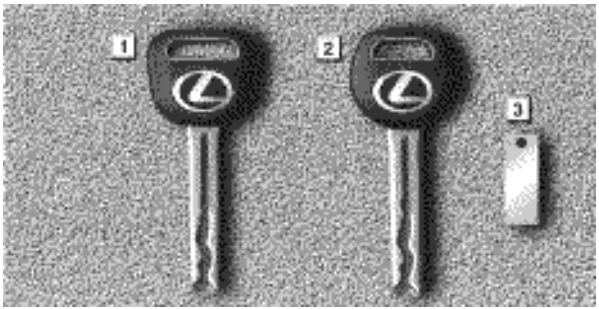

1. **Master key – The master key works in every lock.**
2. **Subkey – The subkey will not open the glovebox.**
3. **Key number plate – Keep the plate in a safe place such as your wallet, not in the vehicle.**

To protect things locked in the trunk or glovebox when you have your vehicle parked, leave the subkey with the attendant.

Since the doors and trunk lid can be locked without a key, you should always carry a spare master key in case you accidentally lock your keys inside the vehicle.

If you should require replacement or additional keys for any reason, contact your Lexus dealer.

You should also put a copy of the key number with your important papers.

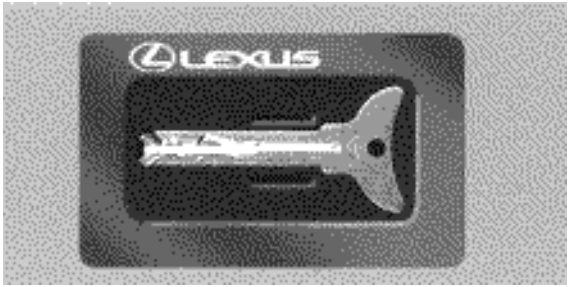

Insert your flat key in its key case as shown. We recommend that you always carry this with you as a spare. Do not leave it in your vehicle.

NOTICE

- ***Do not let the key case become bent as the key may fall out or become bent also.***
- ***The flat key is designed for emergency use only, so do not use it regularly instead of the other master keys.***

WIRELESS REMOTE CONTROL TRANSMITTER

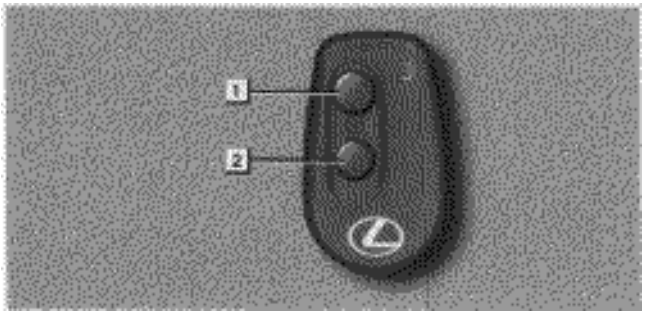

This transmitter has 6 functions.

1. **Locking the doors** 1
2. **Unlocking the doors** 1
3. **Programming the buzzer operation (on or off)** 1 2
4. **Sounding an alarm (Panic Mode)** 1
5. **Arming the "Theft deterrent system"** 1
6. **Disarming the "Theft deterrent system"** 1

The operational range of the wireless remote control is approximately 7.5 meters (25 feet). The effective range may vary with different conditions.

When handling, take care of the following:

- Avoid getting the transmitter wet.
- Avoid striking the transmitter against any other objects.

Locking/unlocking the doors

(a) Locking

After exiting the vehicle, push the top button on the transmitter. All of the doors will lock, and the buzzer will "chirp".

If any door is not securely closed, the vehicle's buzzer will sound for up to 10 seconds, or until all of the doors are closed. After the doors are all securely closed, you must push the transmitter's top button again to lock them. Also, door locking can not be done if the key is still in the ignition switch.

At the same time the doors lock, the tail and marker lights flash once, the interior lights come on for 3 seconds,* and the "Theft deterrent system" arms. For further information, see "Theft deterrent system" on page 84.

*So long as the interior light switch is set to the "DOOR" position.

Note: If the transmitter is used to lock the doors, it must be used to unlock them as well.

The "Theft deterrent system" arms every time the doors are locked by using the transmitter. If you were to use the key to unlock the doors and enter the vehicle, the "Theft deterrent system" will trigger. The system cannot be disarmed by unlocking the doors with a key.

(b) Unlocking

To enter the vehicle, push the top button on the transmitter.* All of the doors will unlock, and the buzzer will "chirp" twice.**

Together with the doors unlocking, the interior lights will come on for 30 seconds or until the vehicle's doors are closed. At the same time, the tail and marker lights will flash twice, ** and the "Theft deterrent system" will disarm.

You have 30 seconds to open a door after using the remote unlock feature. If no door is opened within 30 seconds, they will automatically re–lock, and the "Theft deterrent system" will re–arm.

*If the doors were locked without using the transmitter, you must push the transmitter's top button twice. The first time it is pushed, the "Theft deterrent system" arms.

**If the tail and marker lights flash 3 times and the buzzer "chirps" 3 times, this indicates that the system was triggered and the alarm sounded while you were away from the vehicle.

Turning off the buzzer

The factory setting for the buzzer's operation is ON (the buzzer "chirps" when the doors are locked and unlocked). When the buzzer has been turned off, its operation is affected only during remote control door locking and unlocking.

To change the buzzer operation, follow the steps below:

1. Insert the key into the ignition switch, and turn it to "ON" (not "ACC").

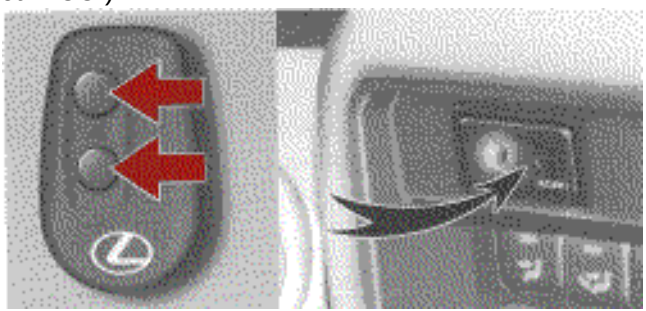

2. Using only one remote control, push and hold both buttons (at the same time) for over 2 seconds, until the status monitor's LED turns on.

YOU MUST PERFORM THE NEXT STEPS WITHIN 30 SECONDS.

3. Select the operating mode.

To turn the buzzer off: Push the bottom remote control transmitter's button twice. (The buzzer "chirps" twice and the exterior lights flash twice.) Turn the ignition switch to the "LOCK" position.* (The buzzer "chirps" 3 times and the exterior lights flash 3 times.)

To turn the buzzer on: Push the bottom remote control transmitter's button once. (The buzzer "chirps" once and the exterior lights flash once.) Turn the ignition switch to the "LOCK" position.* (The buzzer "chirps" 3 times and the exterior lights flash 3 times.)

*If you do not turn the ignition key to "LOCK", or if you exceed 30 seconds during the programming steps, the status monitor's LED will turn off and the previous operation mode will remain unchanged.

Sounding an alarm (Panic Mode)

Pushing and holding the transmitter's top button for over 2 seconds will cause an alarm to sound to deter any person trying to break into or damage your vehicle.

At the same time the alarm sound, the tail and marker lights flash and the interior lights flash.* Also, the doors will lock or unlock (depending on their status when the Panic Mode is activated**). You may activate this alarm at any time, even while driving.

*So long as the interior light switch is set to the "DOOR" position.

**If the doors are locked when Panic Mode is activated, they will unlock, then lock again. If the doors are unlocked when Panic Mode is activated, they will lock, then unlock again.

If you want to stop the alarm, push the transmitter's top button.

Note: Your vehicle's starter is not disabled during the Panic Mode alarm.

For vehicles sold in U.S.A.

FCC ID: HYQWDT – C
MADE IN JAPAN

This device complies with Part 15 of the FCC Rules. Operation is subject to the following two conditions: (1) this device may not cause harmful interference, and (2) this device must accept any interference received, including interference that may cause undesired operation.

CAUTION

Changes or modifications not expressly approved by the party responsible for compliance could void the user's authority to operate the equipment.

IGNITION SWITCH–ACTIVATED AUTOMATIC DOOR LOCK/UNLOCK

For your convenience, your vehicle's doors will automatically lock when the key is inserted into the ignition switch and turned to "ON" or "START". They will unlock when the key is turned back to "LOCK" or "ACC".

Automatic door locking

1. Enter the vehicle and close all doors securely.
2. Insert the key into the ignition switch and turn it to "ON" or "START".

All of the doors will automatically lock. This feature will not work while any door is open; all of the doors must be closed securely.

Automatic door unlocking

1. Turn the key to "ACC" or "LOCK".

The automatic unlock feature will not work if a door is unlocked and opened before the key has been turned back to "LOCK" or "ACC".

The automatic unlocking feature will work only if the doors were automatically locked.

Note: The Automatic door lock/unlock feature will operate only once (automatic lock, then automatic unlock) before a door is opened and closed again.

SIDE DOORS

Locking with key

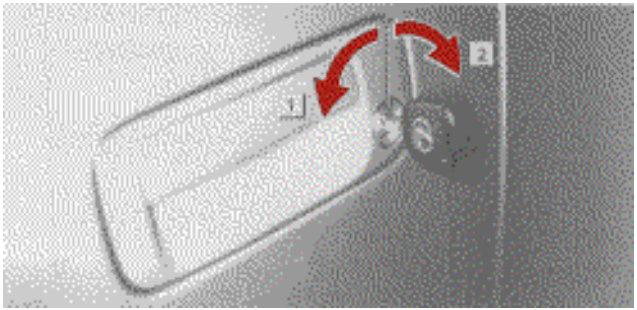

▶ 1 ***Lock*** 2 ***Unlock***

Turn the key towards the front of the vehicle to lock and towards the back to unlock.

All the side doors and back door lock and unlock simultaneously with either front door. In the driver's door lock, turning the key once will unlock the driver's door and twice in succession will unlock all the side doors and back door simultaneously. In the passenger's door lock, turning the key once will unlock all the side doors and back door simultaneously.

Locking with inside lock button

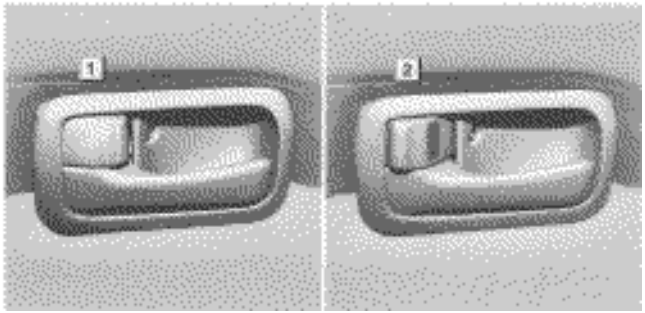

▶ 1 ***Lock*** 2 ***Unlock***

Push in the lock button to lock and unlock the door.

When locked, the door cannot be opened with either the outside or inside door handle.

Closing the door with the lock button pushed in will also lock the door. Be careful not to lock your keys in the vehicle. The door will not lock if the key is left in the ignition switch when closing the front doors.

CAUTION

Before driving, make sure the doors are closed and locked, especially when small children are in the vehicle. Along with the proper use of seat belts, locking the doors helps prevent the driver and passengers from being thrown out from the vehicle during an accident. It also helps prevent the doors from being opened unintentionally.

Locking with power door lock switch

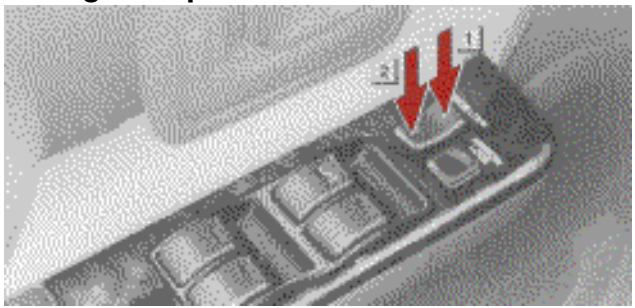

▶ 1 ***Lock*** 2 ***Unlock***

To lock all the side doors and back door simultaneously, push the power door lock switch on the "DOOR LOCK" side. Pushing on the opposite side will unlock them.

The same switch is also equipped on the front passenger's side.

When the front doors are locked from the outside, the switch will not work until either front door is unlocked with the key or lock button.

Locking with rear door child–protector

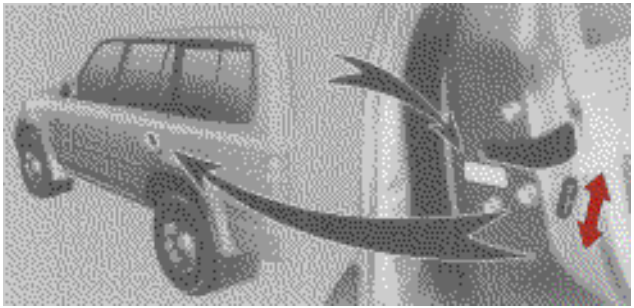

Whenever small children are in the vehicle, lock the rear door so that it does not open from the inside. To do this, move the lever to the “LOCK” position as shown on the label.

SIDE WINDOWS

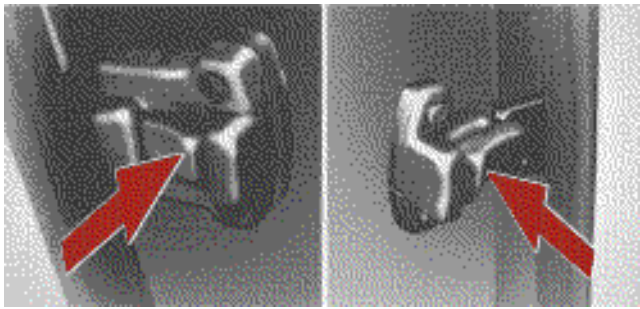

▶ ***Unlock***

Push the lever to unlock and slide the window.

Make sure the window is locked into place after closing.

BACK DOOR

Opening and closing

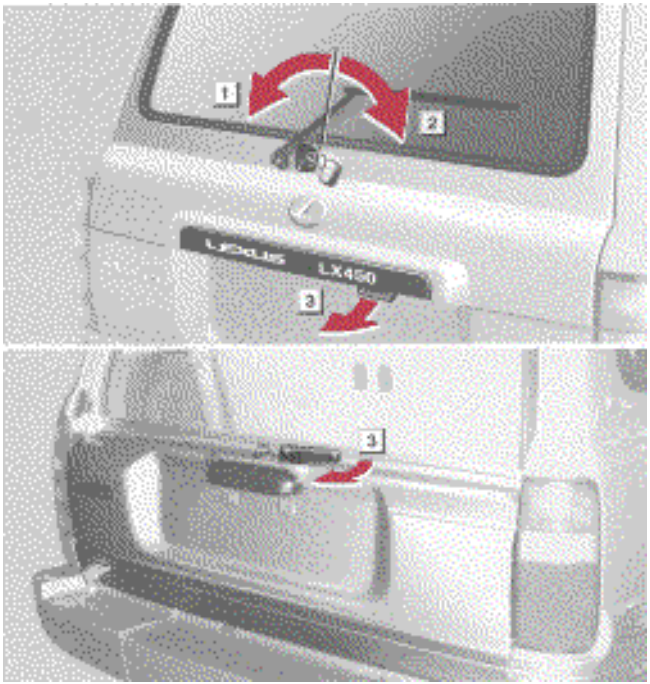

▶ ***Opening from outside*** 1 ***Unlock*** 2 ***Lock*** 3 ***Open***

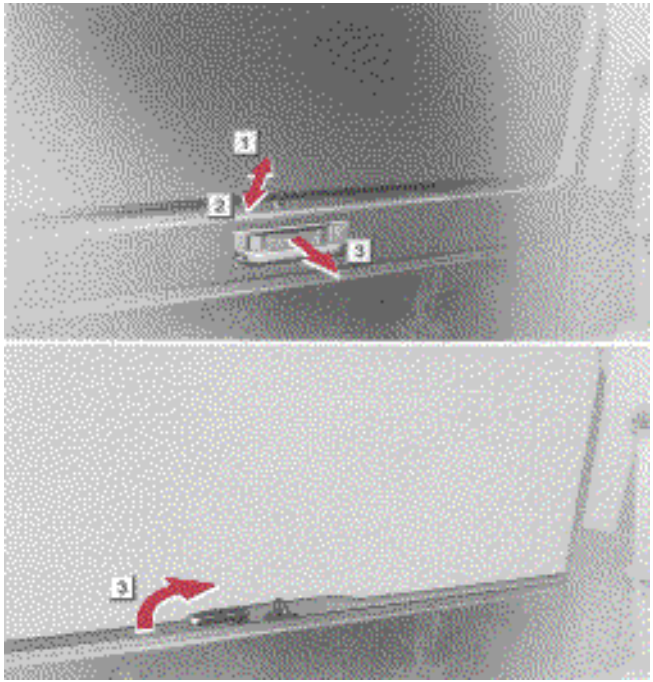

▶ ***Opening from inside*** 1 ***Unlock*** 2 ***Lock*** 3 ***Open***

The back door can be opened as shown.

See “Luggage stowage precautions” on page 41 for precautions to observe in loading luggage.

After closing the back door, try pulling it up to make sure it is securely closed.

Closing the back door with the lock button pushed in will also lock the back door. Be careful not to lock your keys in the vehicle.

The back door lock will be controlled with the power door lock switch. (For instructions, see “Side doors” on page 11.)

CAUTION

Keep the back door closed while driving. This not only keeps the luggage from being thrown out but also prevents exhaust gases from entering the vehicle.

Locking with back door child–protector

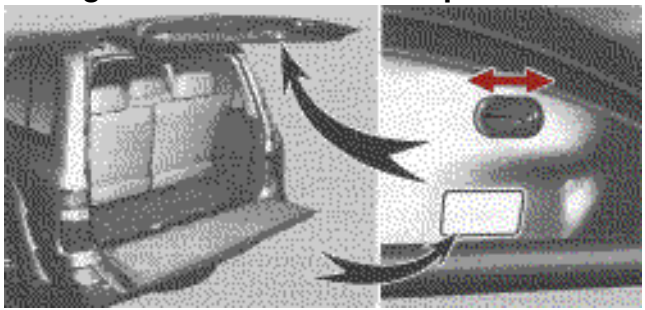

Whenever small children are in the vehicle, lock the back door so that it does not open from the inside. To do this, move the lever to the “LOCK” position as shown on the label.

INSTRUMENTS AND CONTROLS

Switches

Headlight switch ---------- 18
Headlight dimmer and turn signal switch ---------- 18
Windshield wiper and washer switch ---------- 19
Rear window wiper and washer switch ---------- 20
Rear window defogger switch ---------- 21
Power window switches ---------- 22
Emergency flasher switch ---------- 24

HEADLIGHT SWITCH

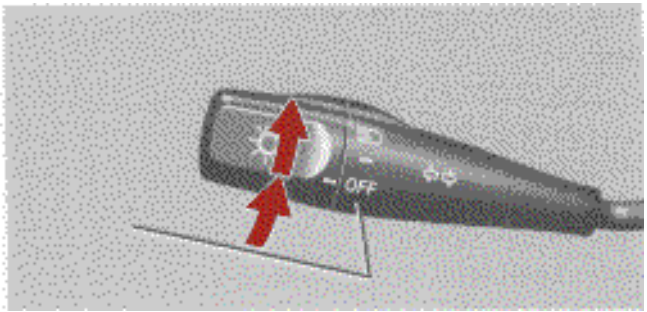

To turn the lights on, twist the knob on the end of the lever.

FIRST CLICKSTOP: Only the parking, tail, license plate, side marker and instrument panel lights turn on.

SECOND CLICKSTOP: Headlights also turn on.

The lights automatically turn off when the driver's door is opened with the ignition key turned to the "ACC" or "LOCK" position. To turn them on again, turn the ignition key to the "ON" position, or turn the headlight switch off and then twist the knob until the first or second clickstop. If you are going to park for over one week, make sure the headlight switch is off.

NOTICE

To prevent the battery from being discharged, do not leave the lights on longer than necessary when the engine is not running.

HEADLIGHT DIMMER AND TURN SIGNAL SWITCH

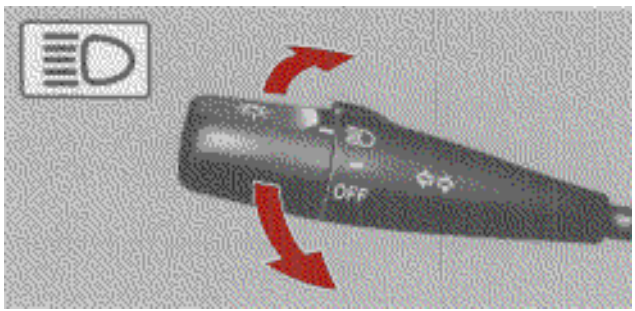

For high beam, push the lever forward. Pull it back for low beam. For the headlight flasher, pull it further back.

A blue light in the instrument cluster indicates high beam or headlight flasher is on.

The headlight flasher works even when the headlight switch is off.

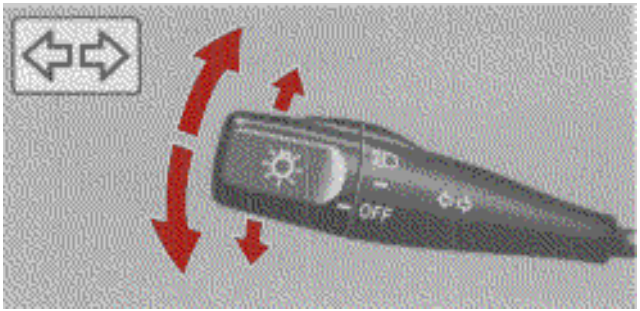

For signaling turns, move the lever up or down in the conventional manner.

The ignition key must be in the “ON” position.

The turn signal is self–cancelling after a turn, but after a lane change, you may have to cancel it by hand. You can also signal a lane change by moving the turn signal lever partway and holding it there. If the green light in the instrument cluster flashes faster than normal, it indicates that the front or rear turn signal bulb has burned out.

WINDSHIELD WIPER AND WASHER SWITCH

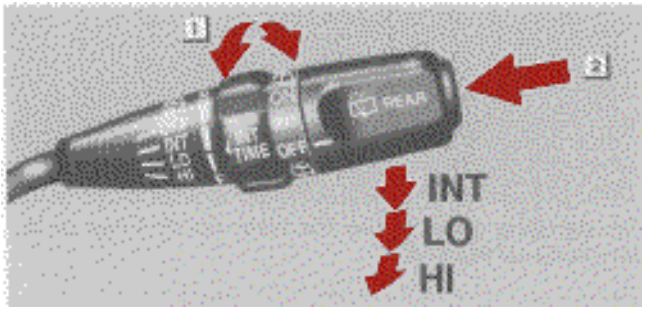

▶ 1 ***Interval adjuster*** 2 ***Washer on***

To turn the wipers on, move the lever down until you reach the desired speed setting.

The ignition key must be in the “ON” position.

There are 3 settings:

“INT” position: Intermittent operation

“LO” position: Low speed operation

“HI” position: High speed operation

Twist the interval adjuster upward to increase the wiping time interval between sweeps, and downward to decrease it.

The wiper lever must be in the “INT” position.

To make the washer squirt, push the button on the end of the lever.

Even if the wiper lever is in the “OFF” position, the wipers will automatically operate a couple of times.

If the washer does not work, check to see whether the washer tank is empty. For information on adding washer fluid, see “Adding washer fluid” on page 233.

In cold weather, warm the windshield with the defroster before using the washer. This will help prevent icing, which could block your vision.

NOTICE
Do not operate the wipers if the windshield is dry. It may scratch the glass.

REAR WINDOW WIPER AND WASHER SWITCH

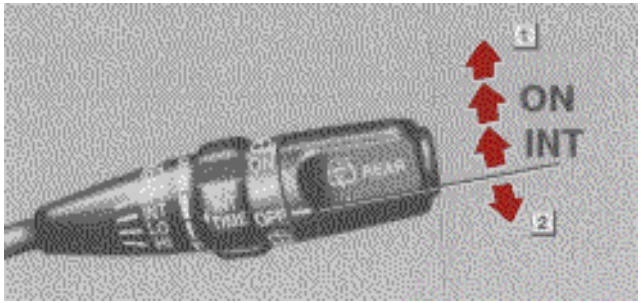

▶ 1 ***Washer on during wiping*** 2 ***Washer on***

To turn the wipers on, twist the knob at the end of the lever.

The ignition key must be in the “ON” position.

There are 2 settings:

“INT” position: Intermittent operation

“ON” position: Low speed operation

To make the washer squirt, twist the knob toward you.

To make the washer squirt while operating in “ON” position, twist the knob forward.

If the washer does not work, check to see whether the washer tank is empty. For information on adding washer fluid, see “Adding washer fluid” on page 233.

NOTICE
Do not operate the rear window wiper if the rear window is dry. It may scratch the glass.

REAR WINDOW DEFOGGER SWITCH

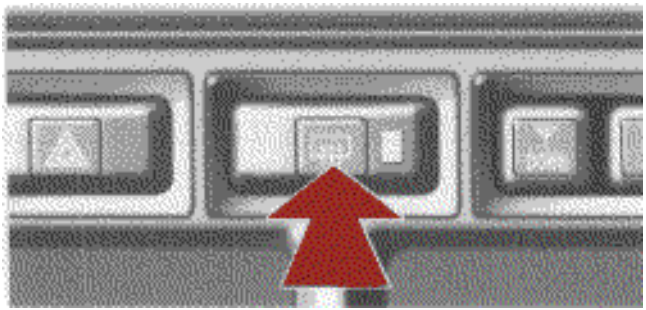

To turn the electric rear window defogger on, push the switch.

The ignition key must be in the “ON” position.

The thin heater wires on the inside of the back window will quickly clear the surface. An indicator light will illuminate to indicate the defogger is operating.

Push the switch once again to turn the defoggers off.

Make sure you turn the defoggers off when the surfaces are clear. Leaving the defoggers on for a long time could cause the battery to discharge, especially during stop–and–go driving. The defoggers are not designed for drying rain water or for melting snow.

NOTICE

- ***To prevent the battery from being discharging, turn the switch on when the engine is running.***
- ***When cleaning the inside of the rear window, be careful not to scratch or damage the heater wires.***

POWER WINDOW SWITCHES

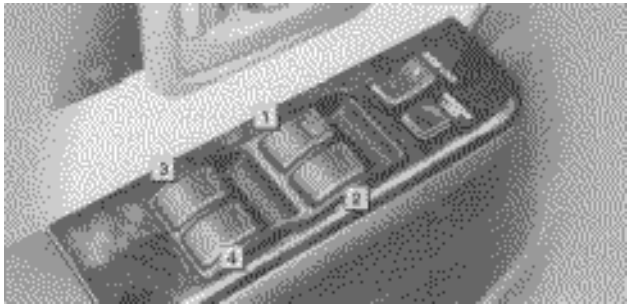

▶ 1 ***For driver's window***

2 ***For front passenger's window***

3 ***For left rear window***

4 ***For right rear window***

To raise or lower the windows, use the switch on each door. The passengers' windows can also be controlled by the switches on the driver's door.

The ignition key must be in the "ON" position. However, even if the ignition key is turned to the "ACC" or "LOCK" position, the window can be operated until either of the front doors is opened (or for about 60 seconds).

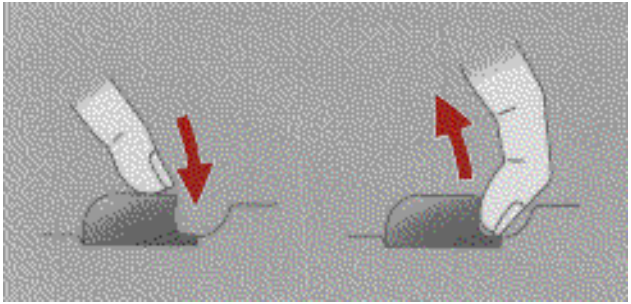

Operating the driver's switch

To lower the window, push the switch halfway down. Pull it up to raise the window. The window glass moves as long as the switch is operated.

To fully lower the driver's window automatically, push the switch fully down.

In automatic operation, the window will fully open even if you let go of the switch. To stop the window partway, lightly pull the switch up and then release it.

Operating the passenger's switches

To lower the window, push the switch down. Pull it up to raise the window. The window moves as long as the switch is operated.

Operating the window lock switch

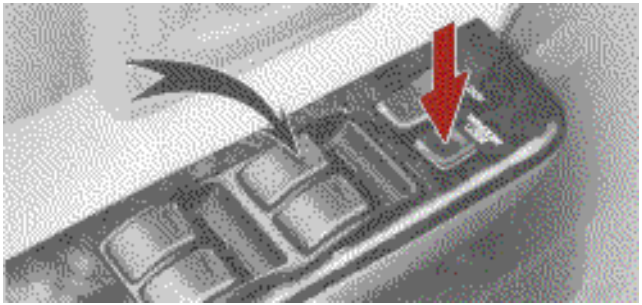

▶ ***Indicator light***

With the window lock switch pressed in, only the driver's window can be raised or lowered.

CAUTION

To avoid serious personal injury, you must do the following.

- **Always make sure the head, hands and other parts of the body of all occupants are kept completely inside the vehicle before you close the power windows. If someone's neck, head or hands gets caught in a closing window, it could result in a serious injury. When anyone closes the power windows, be sure that they operate the windows safely.**
- **When small children are in the vehicle, never let them use the power window switches without supervision. Use the window lock switch to prevent them from making unexpected use of the switches.**
- **Never leave small children alone in the vehicle, especially with the ignition key still inserted. They could use the power window switches and get trapped in a window. Unattended children can become involved in serious accidents.**

EMERGENCY FLASHER SWITCH

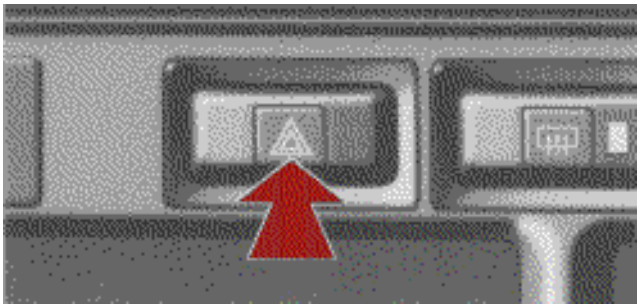

To turn on the emergency flashers, push the switch.

All the turn signal lights will flash. The emergency flashers will work with the engine running or off and with or without the ignition key.

Turn on the emergency flashers to warn other drivers if you must stop your vehicle where it might be a traffic hazard.

Always pull your vehicle as far off the road as possible.

The turn signal light switch will not work when the emergency flashers are in operation.

NOTICE

To prevent the battery from being discharged, do not leave the switch on longer than necessary when the engine is not running.

INSTRUMENTS AND CONTROLS

Gauges, meters and service reminder indicators

Fuel gauge ---------- 26
Engine coolant temperature gauge ---------- 26
Oil pressure gauge ---------- 27
Voltmeter ---------- 28
Tachometer ---------- 28
Odometer and trip meter ---------- 29
Service reminder indicators and warning buzzers ----- 29
Instrument panel light control ---------- 34

FUEL GAUGE

▶ ***Low fuel level warning light***

The gauge is displayed when the ignition switch is on and indicates the approximate quantity of fuel remaining in the tank.

It is a good idea to keep the tank over 1/4 full.

This fuel gauge has a non–return type needle which remains at the last indicated position when the ignition switch is turned off.

If the fuel level approaches “E” or the low fuel level warning light comes on, fill the fuel tank as soon as possible.

If the fuel tank is completely empty, the malfunction indicator lamp comes on. Fill the fuel tank immediately.

The indicator lamp goes off after driving several times. If the indicator lamp does not go off, contact your Lexus dealer as soon as possible.

See the inner back cover for fuel capacity and recommended fuel selection.

ENGINE COOLANT TEMPERATURE GAUGE

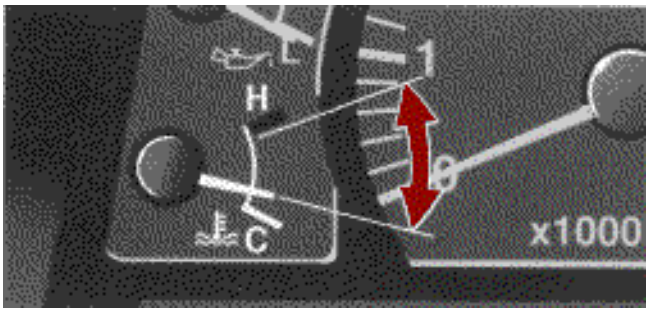

▶ ***Normal range***

The gauge indicates the engine coolant temperature when the ignition switch is on. The engine operating temperature will vary with changes in weather and engine load.

If the needle points to the red zone or higher, stop your vehicle and allow the engine to cool.

Your vehicle may overheat during severe operating conditions, such as:

- Driving up a long hill on a hot day.
- Reducing speed or stopping after high speed driving.

- Idling for a long period with the air conditioning on in stop–and–go traffic.
- Towing a trailer.

NOTICE

- ***Do not remove the thermostat in the engine cooling system as this may cause the engine to overheat. The thermostat is designed to control the flow of coolant to keep the temperature of the engine within the specified operating range.***
- ***Do not continue driving with an overheated engine. See "If your vehicle overheats" on page 167.***

OIL PRESSURE GAUGE

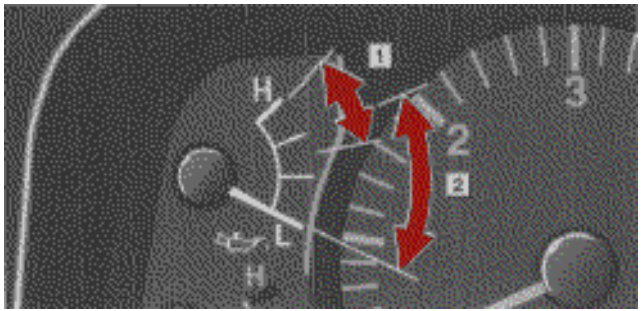

▶ 1 ***Normal driving*** 2 ***Idling***

The oil pressure gauge indicates engine oil pressure when the ignition is on. Check it while driving to make sure the needle is in the proper range.

If the oil pressure should stay below the normal range, pull off the road to a safe place and stop the engine immediately. Call a Lexus dealer or qualified repair shop for assistance.

Oil pressure may not build up when the oil level is too low. The oil pressure gauge is not designed to indicate oil level, and the oil level must be checked using the level dipstick.

NOTICE

Do not drive the vehicle with the oil pressure below the normal range until the cause is fixed – it may ruin the engine.

VOLTMETER

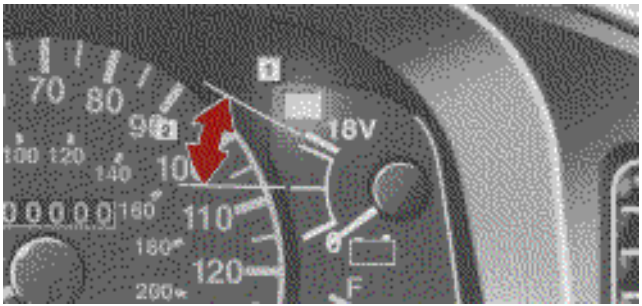

▶ 1 *Discharge warning light* 2 *Normal range*

The voltmeter tells whether the battery is charged or discharged. Check it while the engine is running – the needle should always indicate as shown above.

If the needle reads below or above the normal range while the engine is running, it indicates the charging system needs immediate repair.

However, it is normal for the needle to drop below the normal range during engine starting.

TACHOMETER

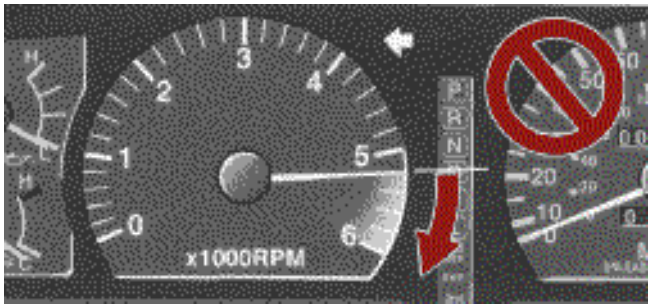

The tachometer indicates engine speed in thousands of rpm (revolutions per minute). Use it while driving to prevent engine overrevving.

Driving with the engine running too fast causes excessive engine wear and poor fuel economy. Remember, in most cases the slower the engine speed, the greater the fuel economy.

NOTICE
Do not let the indicator needle get into the red zone. This may cause severe engine damage.

ODOMETER AND TRIP METER

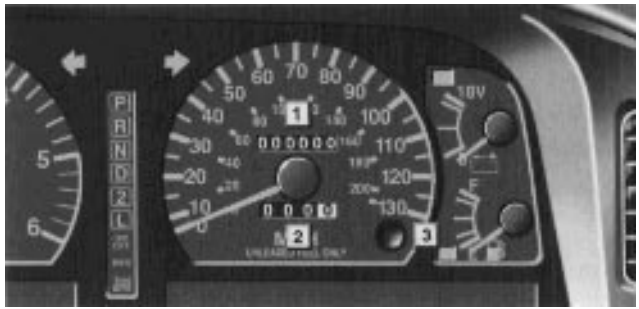

▶ 1 ***Odometer*** 2 ***Trip meter***
3 ***Resetting knob***

The odometer records the total distance the vehicle has been driven. The trip meter may be set to zero to record the distance on each trip. To set the trip meter, press the resetting knob in and release it.

The black digits in white indicate tenths of miles.

SERVICE REMINDER INDICATORS AND WARNING BUZZERS

	IF THIS INDICATOR OR BUZZER COMES ON...	DO THIS.
(a)		If parking brake is off, stop and check.
(b)	(indicator and buzzer)	Fasten seat belts.
(c)		Take vehicle to Lexus dealer immediately.
(d)	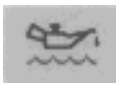	Stop and check.
(e)		Take vehicle to Lexus dealer.

(f)	ABS	Take vehicle to Lexus dealer.
(g)		Close all side doors and back door.
(h)	A/T P	Shift four–wheel drive control out of “N”.
(i)	A/T OIL TEMP	Stop and check.
(j)	Discharge warning light	Stop and check.
(k)	Low fuel level warning light	Fill up tank.
(l)	Key reminder buzzer	Remove key.

(a) Brake System Warning Light

This light has the following tow functions:

Parking brake reminder

If this light is on, make sure the parking brake is fully released. The light should go off.

Low brake fluid level warning

If this light comes on and stays on while you are driving, slow down and pull off the road. Then stop the vehicle carefully. Remember that stopping distance and pedal effort may be increased. There may be a problem somewhere in the brake system. Check the fluid level of the see–through reservoir.

To make sure the parking brake has not caused the warning light to come on, check to see that the parking brake is fully released.

If the brake fluid level is low . . .

At a safe place, test your brakes by starting and stopping.

- If you judge that the brakes still work adequately, drive cautiously to your nearest dealer or shop for repairs.
- If the brakes are not working, have the vehicle towed in for repairs. (For towing information, see page 175.)

CAUTION

It is dangerous to continue driving normally when the brake fluid level is low.

If the brake fluid level is correct . . .

Have the warning system checked by your Lexus dealer.

(b) Seat Belt Reminder Light and Buzzer

Once the ignition key is turned to “ON” or “START”, the reminder light and buzzer come on if the driver’s seat belt is not fastened. Unless the driver fastens the belt, the light stays on and the buzzer stops after about 4 to 8 seconds.

(c) SRS Airbag Warning Light

This indicator comes on when the ignition key is turned to the “ACC” or “ON” position. It goes off after about 6 seconds. This means the SRS airbags are operating properly.

The SRS airbag warning light system monitors the airbag sensor assembly, inflators, warning light, interconnecting wiring and power sources.

If either of the following conditions occurs, this indicates a malfunction somewhere in the parts monitored by the warning light system. Contact your Lexus dealer as soon as possible to service the vehicle.

- The light does not come on as described above or remains on.
- The light comes on while driving.

(d) Low Engine Oil Level Warning Light

This light indicates that the engine oil level needs to be checked. If the light comes on while you are driving on rough roads or steep inclines, take your vehicle to a level spot to see whether the light goes off. If it remains on, check the oil level following the instructions of “Checking the engine oil level” on page 203.

NOTICE
Continued engine operation with low engine oil will damage the engine.

(e) Malfunction Indicator Lamp

This lamp comes on in the following cases.

a. The fuel tank is completely empty. (See “Fuel gauge” on page 26 for instructions.)

b. There is a problem somewhere in your engine electrical system.

If it comes on while you are driving in case b., have your vehicle checked/repaired by your Lexus dealer as soon as possible.

(f) “ABS” Warning Light

This light warns that there is a problem somewhere in your anti–lock brake system.

If the light comes on while you are driving, have your vehicle checked by your Lexus dealer as soon as possible.

The light will come on when the ignition key is turned to “ON”, and will go off after about 3 seconds.

When the “ABS” warning light is on (and the brake system warning light is off), the brake system operates conventionally but without anti–lock function.

However, the anti–lock brake system does not operate when the four–wheel drive control lever is in the “L” position. It is normal operation for the “ABS” warning light to be on at this time.

(g) Open Door Warning Light

This light remains on until all the side doors and back door are completely closed.

(h) Unengaged “Park” Warning Light

This light warns that the transmission “Park” mechanism is not engaged. If the four–wheel drive control is in the “N” position while the selector lever is in the “P” position, the transmission will disengage and the wheels will not lock.

CAUTION

To restore the park function, shift the four–wheel drive control out of “N”.

(i) Automatic Transmission Fluid Temperature Warning Light

This light warns that the automatic transmission fluid temperature is too high.

If this light comes on while you are driving, slow down and pull off the road. Stop the vehicle at a safe place and put the selector lever in “P” and leave the engine idling until the light goes off. If the light goes off, you can start the vehicle again. If the light does not go off, call a Lexus dealer or qualified repair shop for assistance.

NOTICE

Continued driving with the warning light on may damage the automatic transmission.

(j) Discharge Warning Light

This light warns that the battery is being discharged.

If it comes on while you are driving, stop the vehicle, turn off the engine, and check for the cause. Look first at the engine drive belt.

- If it is loose or broken, the generator will not charge the battery properly.
- If the belt is O.K., there is a problem somewhere in the charging system.

The engine ignition will continue to operate, however, until the battery is discharged. Turn off the air conditioning, blower, radio, etc., and drive directly to the nearest Lexus dealer or repair shop.

NOTICE

Do not continue driving if the engine drive belt is broken or loose.

(k) Low Fuel Level Warning Light

This light comes on when the fuel level in the tank becomes nearly empty. Fill the tank as soon as possible.

(l) Key Reminder Buzzer

This buzzer reminds you to remove the key when you open the driver's door with the ignition key in the "ACC" or "LOCK" position.

How to check all the service reminder indicators

(except the low fuel level warning light):

1. Apply the parking brake.
2. Open the door.

The following service reminder indicator should come on. It goes off when you close the door completely.

3. Place the four–wheel drive control lever in "N" position and the selector lever in "P" position.
4. Turn the ignition key to "ACC".

The following service reminder indicator should come on. It goes off after 6 seconds.

5. Turn the ignition key to “ON”.
The following service reminder indicators should come on.

The following service reminder indicator goes off after 3 seconds.

6. Turn the ignition key to “START”.
The following service reminder indicators should come on.

If any service reminder indicator or warning buzzer does not function, either the bulb is burned out or circuit is in need of repair. Have it checked by your Lexus dealer as soon as possible.

INSTRUMENT PANEL LIGHT CONTROL

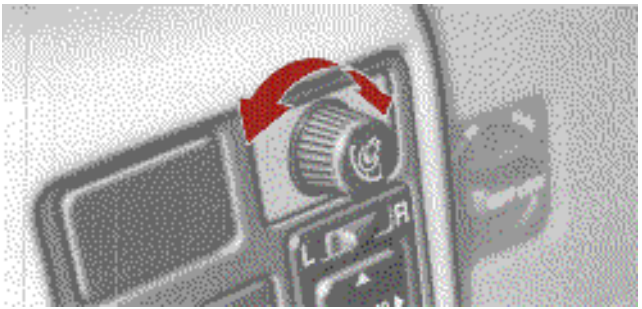

To adjust the brightness of the instrument panel lights, turn the knob.

INSTRUMENTS AND CONTROLS

Interior equipment

Vanity mirrors ---------- 36
Interior lights ---------- 36
Personal lights ---------- 37
Ignition switch light ---------- 37
Clock ---------- 38
Cigarette lighter and ashtray ---------- 38
Glovebox ---------- 39
Floor mat ---------- 40
Tie–down hooks ---------- 41
Luggage stowage precautions ---------- 41

VANITY MIRRORS

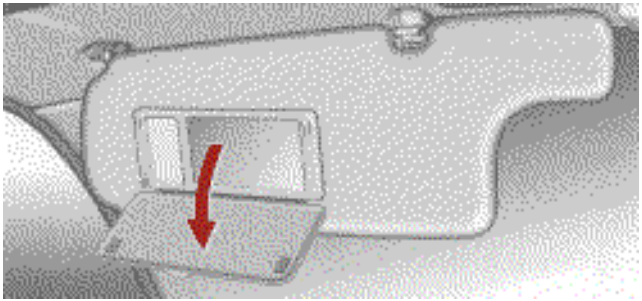

To use the vanity mirrors, swing the sun visor down and open the cover.

The vanity light comes on when you open the cover.

INTERIOR LIGHTS

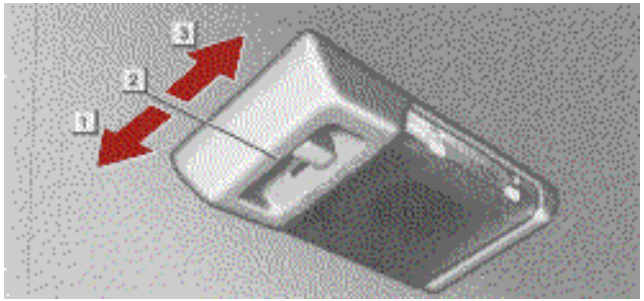

▶ 1 ***On*** 2 ***Off*** 3 ***Door***

To turn on the interior light, slide the switch.

With the switch in the “DOOR” position, the front light comes on when either of the front side doors is opened, and the rear light comes on when either of the rear side doors or back door is opened.

PERSONAL LIGHT

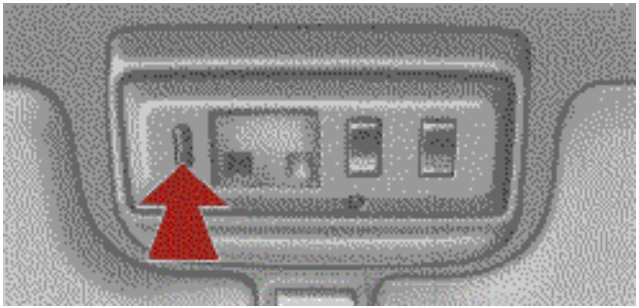

To turn on the personal light, push the switch. To turn it off, push the switch on the opposite side.

IGNITION SWITCH LIGHT

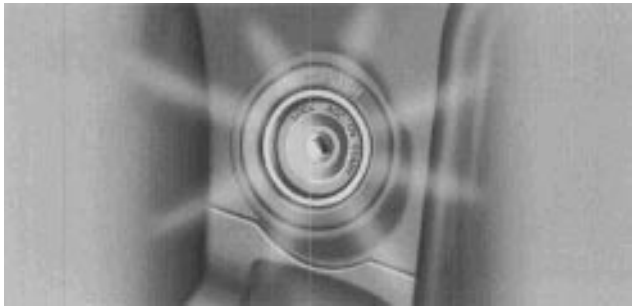

For easy access to the ignition switch, the ignition switch light comes on when the driver's door is opened. The light goes out several seconds later after the driver's door is closed.

CLOCK

The digital clock indicates the time with the ignition key at the “ACC” or “ON” position. To reset the hour, press the “H” button. To reset the minutes, press the “M” button. To adjust the time to the nearest hour, press the “:00” button.

For example, if the “:00” button is pressed when the time is between 9:30 – 9:59 or between 10:01 – 10:29, the time will change to 10:00.

Once the electrical power source has been disconnected from the clock, the time is automatically set to 1:00.

When the headlight switch is turned on, the digital clock indication grows faintly.

CIGARETTE LIGHTER AND ASHTRAY

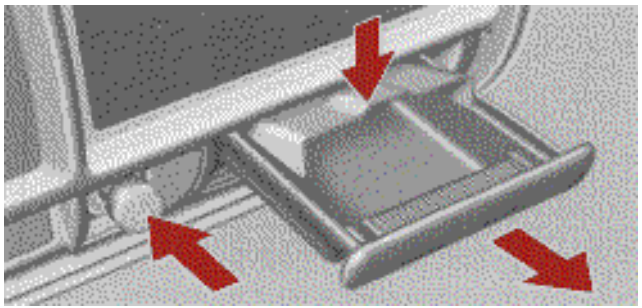

To use the cigarette lighter, press in the cigarette lighter. When it becomes heated, it automatically pops out ready for use.

Do not hold the cigarette lighter pressed in.

If the engine is not running, the ignition key must be in the “ACC” position.

When finished with your cigarette, thoroughly extinguish it in the ashtray to prevent other cigarette butts from catching fire. After using the ashtray, push it back in completely.

To remove the ashtray, press down on the lock spring plate and pull out.

Use a Lexus genuine cigarette lighter or equivalent for replacement.

CAUTION

To reduce the chance of injury in case of an accident or sudden stop while driving, always push the ashtray back in completely after using.

GLOVEBOX

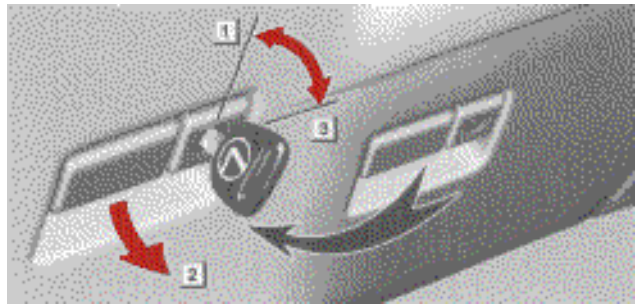

▶ 1 ***Unlock*** 2 ***Open*** 3 ***Lock***

To open the glovebox door, pull the lever. To lock the glovebox door, insert the master key and turn it clockwise.

With the tail lights on, the glovebox light will come on when the glovebox door is open.

CAUTION

To reduce the chance of injury in case of an accident or a sudden stop, always keep the glovebox door closed while driving.

FLOOR MAT

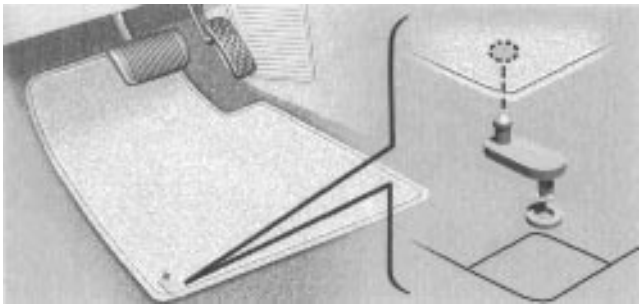

Use a floor mat of the correct size.

If the floor mat has a hole, then it is designed for use with a locking clip. Fix the floor mat and locking clip into the hole in the floor carpet.

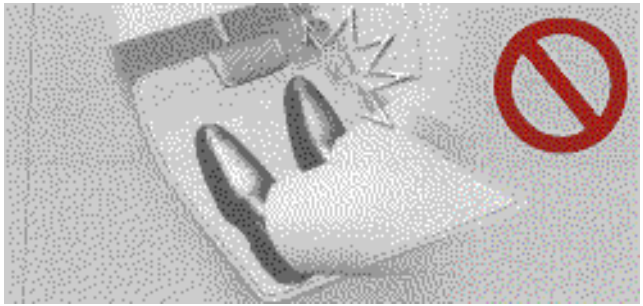

CAUTION

Make sure the floor mat is properly placed on the floor carpet. If the floor mat slips and interferes with the movement of the pedals during driving, it may cause an accident.

TIE–DOWN HOOKS

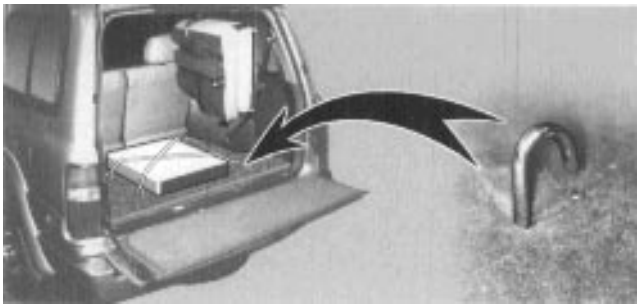

To secure your luggage, use the tie–down hooks as shown above.

See “Luggage stowage precautions” for precautions to observe in loading luggage.

LUGGAGE STOWAGE PRECAUTIONS

When stowing luggage or cargo in or on the vehicle, observe the following:

- Put luggage or cargo in the luggage compartment when at all possible. Be sure all items are secured in place.
- Be careful to keep the vehicle level. Placing the weight as far forward as possible helps maintain vehicle balance.
- For better fuel economy, do not carry unnecessary weight.

CAUTION

- **To prevent luggage or packages from sliding forward during braking, do not stack anything in the luggage compartment higher than the seatbacks. Keep luggage or packages low, as close to the floor as possible.**
- **Never allow anyone to ride in the luggage compartment. It is not designed for passengers. They should ride in their seats with their seat belts properly fastened. Otherwise, they are much more likely to suffer serious bodily injury, in the event of sudden braking or a collision.**

- **Do not drive with objects left on top of the instrument panel. They may interfere with the driver's field of view. Or they may move during sharp vehicle acceleration or turning, and impair the driver's control of the vehicle. In an accident they may injure the vehicle occupants.**

NOTICE

Do not load the vehicle beyond the vehicle capacity weight specified on the tire pressure label.

INSTRUMENTS AND CONTROLS

Exterior equipment

Hood ---------- 44
Fuel tank cap ---------- 44
Moon roof ---------- 45
Rear step bumper ---------- 47

HOOD

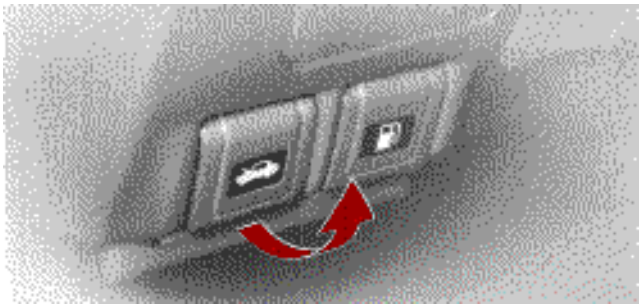

To open the hood, pull the hood lock release lever under the instrument panel. The hood will spring up slightly.

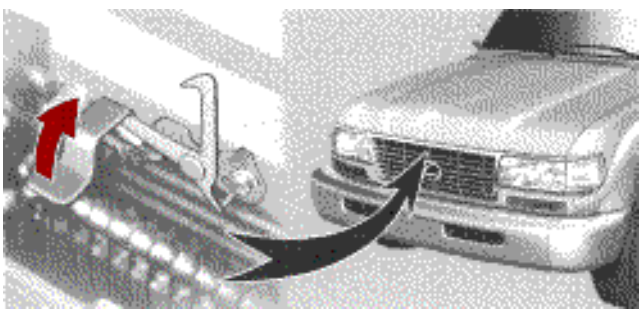

Insert your fingers under the hood, push up the auxiliary catch lever and lift the hood.

Before closing the hood, check to see that you have not forgotten any tools, rags, etc. Then lower the hood and make sure it locks.

FUEL TANK CAP

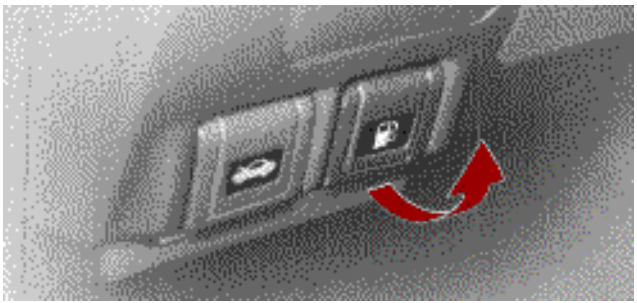

1. To open the fuel filler door, pull the lever under the instrument panel.

CAUTION

- **Do not smoke, cause sparks or allow open flames when refuelling. The fumes are flammable.**
- **When opening the cap, do not remove the cap quickly. In hot weather, fuel under pressure could cause injury by spraying out of the filler neck if the cap is suddenly removed.**

2. To remove the fuel tank cap, turn the cap slowly counterclockwise, then pause slightly before removing it. The removed cap can be stored on the back side of the fuel filler door.

It is not unusual to hear a slight swoosh when the cap is opened. When installing the cap, turn the cap clockwise until you hear a click.

CAUTION

- **Make sure the cap is tightened securely to prevent fuel spillage in case of an accident.**
- **Use only a genuine Lexus fuel tank cap for replacement. It has a built–in check valve to reduce fuel tank vacuum.**

MOON ROOF

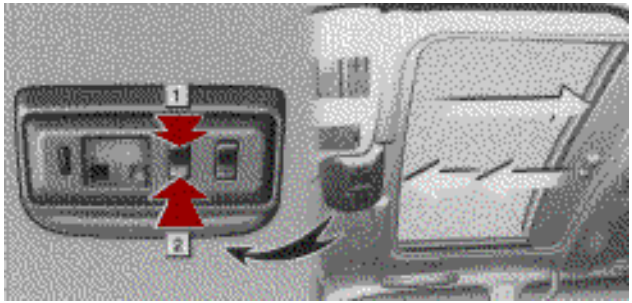

▶ 1 *Open* 2 *Close*

To slide open the moon roof, push the switch on the "OPEN" side.

The moon roof will move while the switch is being pushed and stop when released. The sun shade can be opened or closed manually. However, if you open the moon roof, the sun shade will be opened with the moon roof.

To close the moon roof, push the switch on the "CLOSE" side.

The moon roof will move while the switch is being pushed and stop when released. However, as a precaution, it stops partway before sliding fully closed, except when already more than three–quarters closed. Therefore, release the switch and then push it again to close it completely.

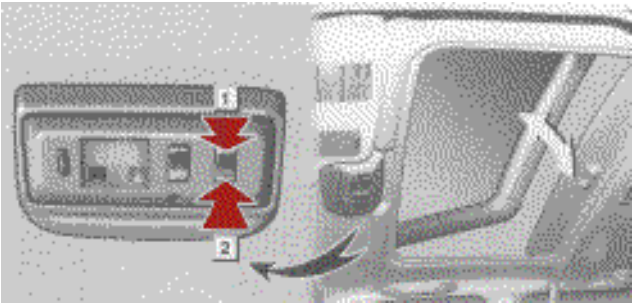

▶ 1 *Tilt up* 2 *Lower*

To tilt up the rear end of the moon roof, push the switch on the “UP” side or on the “DOWN” side to lower it.

To operate the moon roof, the ignition key must be in the “ON” position. However, even if the ignition key is turned to the “ACC” or“LOCK” position, the moon roof can be operated until either of the front doors is opened (or for about 60 seconds).

CAUTION

To avoid serious personal injury, you must do the following.

- **While the vehicle is moving, always keep the head, hands and other parts of the body of all occupants away from the roof opening. Otherwise, you could be seriously injured if the vehicle stops suddenly or if the vehicle is involved in an accident.**
- **Always make sure nobody places his/her head, hands and other parts of the body in the roof opening before you close the roof. If someone’s neck, head or hands gets caught in the closing roof, it could result in a serious injury. When anyone closes the roof, first make sure it is safe to do so.**
- **Never leave small children alone in the vehicle, especially with the ignition key still inserted. They could use the moon roof switches and get trapped in the roof opening. Unattended children can become involved in serious accidents.**
- **Never sit on top of the vehicle around the roof opening.**

REAR STEP BUMPER

The rear step bumper is for rear end protection and easier step–up loading.

CAUTION

- **Do not allow more than one person to get on the rear step bumper at a time. It is designed for only one person.**
- **Never drive the vehicle with anyone on the rear step bumper.**

INSTRUMENTS AND CONTROLS

Comfort adjustment

Front seats ---------- 50
Rear seats ---------- 53
Head restraints ---------- 56
Tilt steering wheel ---------- 57
Outside rear view mirrors ---------- 58
Inside rear view mirror ---------- 59
Seat belts ---------- 60
SRS airbags ---------- 67
Child restraint ---------- 74

FRONT SEATS

Seat adjustment precautions

Adjust the driver's seat so that the foot pedals, steering wheel and instrument panel controls are within easy reach of the driver.

CAUTION

- **Do not adjust the seat while the vehicle is moving as the seat may unexpectedly move and cause the driver to lose control of the vehicle.**
- **Be careful not to hit the seat against a passenger, luggage or the rear seat.**

NOTICE

Do not operate the control switch in more than one dimension at a time. It may cause electrical overload.

Adjusting front seat

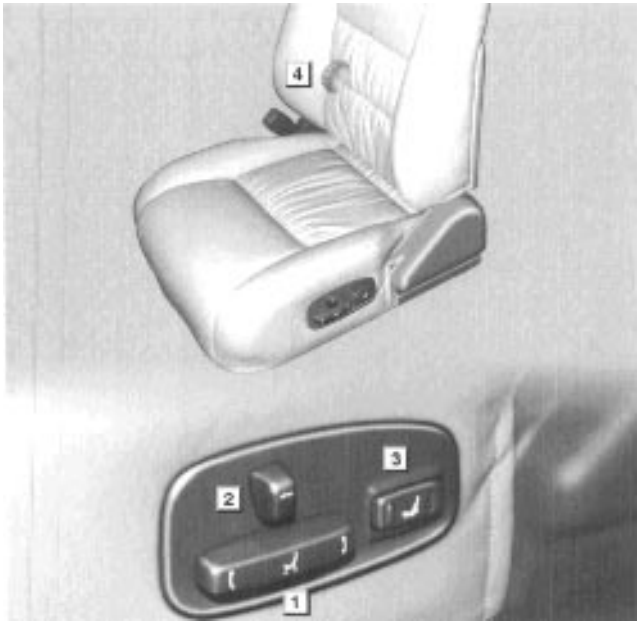

▶ 1 ***Seat position control switch, seat cushion angle and height control switch***

2 ***Seatback angle control switch***

3 ***Lumbar support control switch***

4 ***Side support control knob***

Adjusting seat position

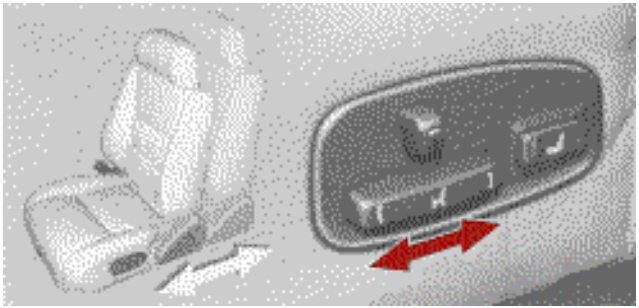

Move the control switch in the desired direction.
Releasing the switch will stop the seat in that position. Do not place anything under the seat. It might interfere with the seat movement.

Adjusting seatback angle

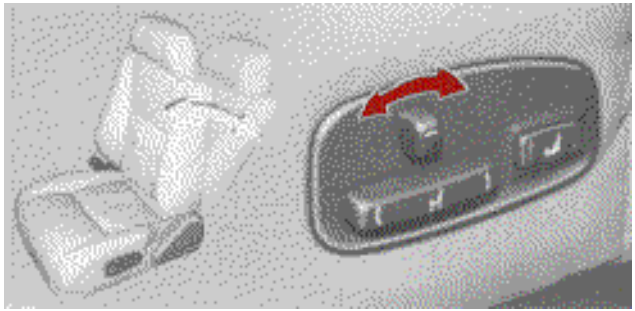

Move the control switch in the desired direction.
Releasing the switch will stop the seatback in that position.

CAUTION

To reduce the risk of sliding under the lap belt during a collision, avoid reclining the seatback any more than needed. The seat belts provide maximum protection when the driver and the passenger are sitting up straight and well back in the seats. If you are reclined, the lap belt may slide past your hips and apply restraint forces directly to the abdomen. Therefore, in the event of a frontal collision, the risk of personal injury may increase with increasing recline of the seatback.

Adjusting seat cushion angle and height

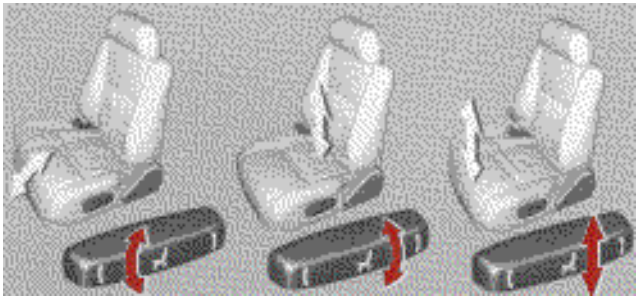

Move the control switch in the desired direction.

Releasing the switch will stop the seat cushion in that position.

Adjusting lumbar support (Driver's seat only)

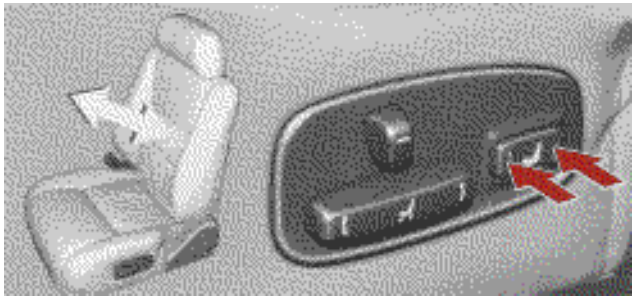

Push the control switch on either side.

The amount of lumbar support will change as long as the switch is pushed.

Adjusting side support control knob (Driver's seat only)

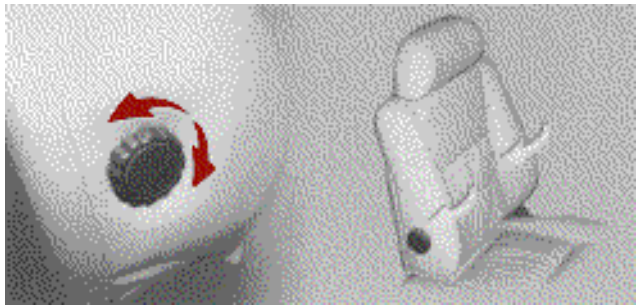

Turn the knob either way.

REAR SEATS

Rear seat precautions

To fold or remove the rear seats, operate the seats as illustrated below. Reverse the procedure to return them. Be sure to follow every indicated step exactly.

CAUTION

- **Any operations should not be made while the vehicle is moving.**
- **When returning seats to their original position:**
  Make sure the seat belts are not twisted or caught under the seat and are arranged in their proper position for ready use.
  Make sure the seat is securely locked by pushing forward and rearward on the top of the seatback or by trying to pull up the edge of the bottom cushion.

Folding up or removing the seats will enlarge the luggage compartment. See "Luggage stowage precautions" on page 41 for precautions to observe in loading luggage.

Folding second seat up

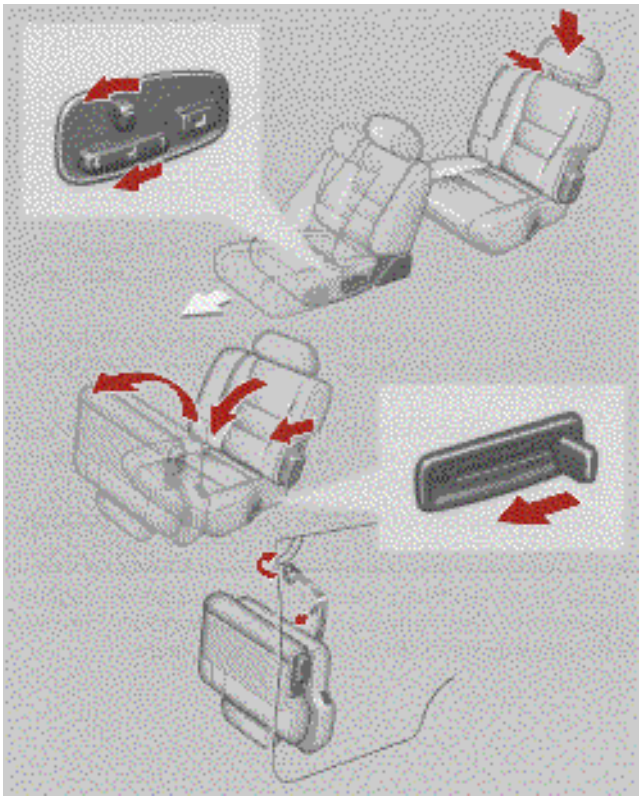

Folding second seat for third seat entry

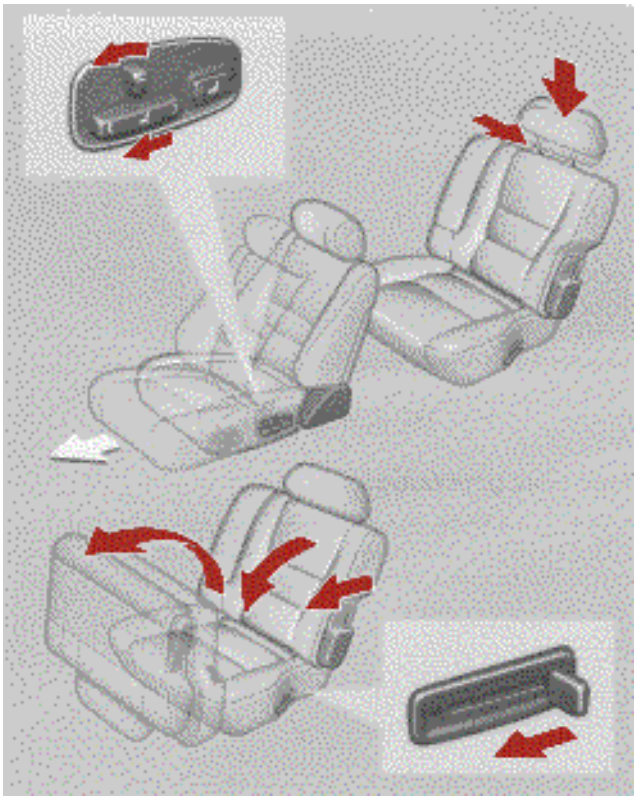

Folding third seat up

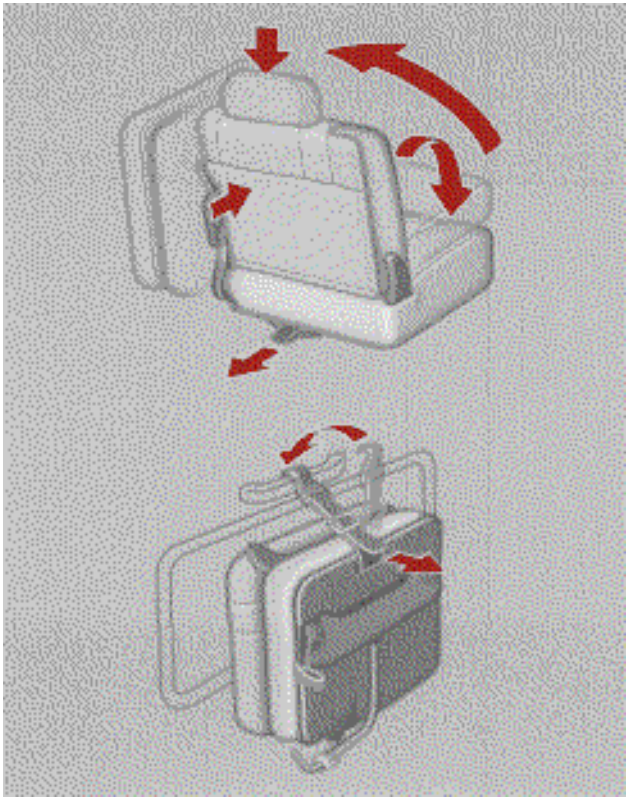

Removing third seat

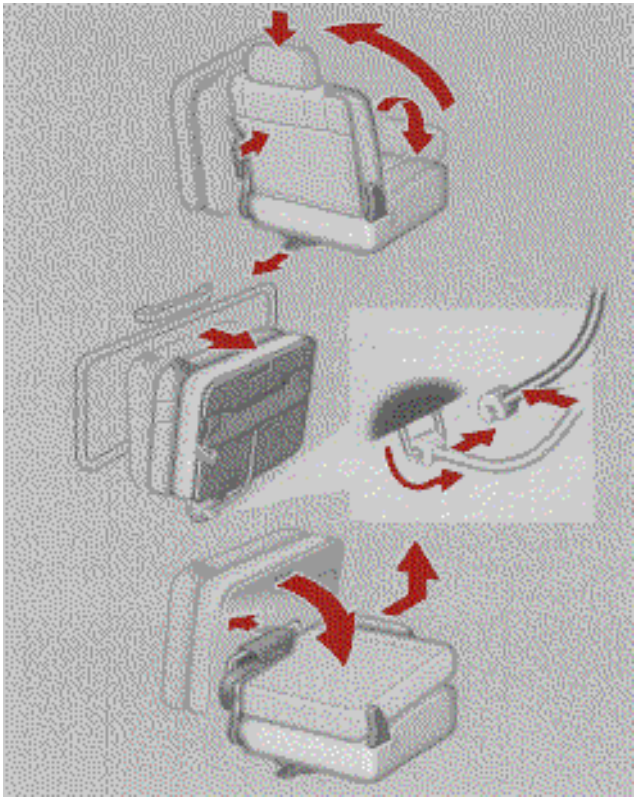

HEAD RESTRAINTS

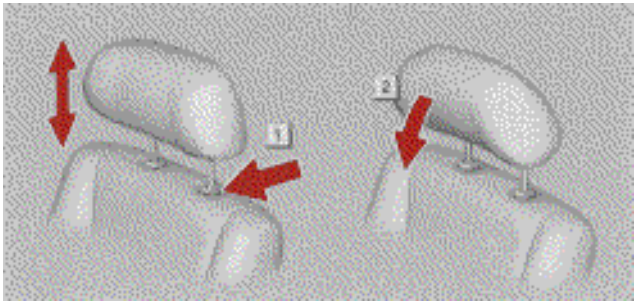

▶ 1 ***Unlock*** 2 ***Forward***

To raise the head restraint, pull it up. To lower it, press the lock release button and push the head restraint down. To move the head restraint forward, pull on the top.

Pulling the top of the head restraint as far as it can go will return it to the upright position.

The head restraint is most effective when it is close to your head. Therefore, using a cushion on the seatback is not recommended.

CAUTION

- **Adjust the top of the head restraint so that it is closest to the top of your ears.**
- **After adjusting the head restraint, make sure it is locked in position.**
- **Do not drive with the head restraints removed.**

TILT STEERING WHEEL

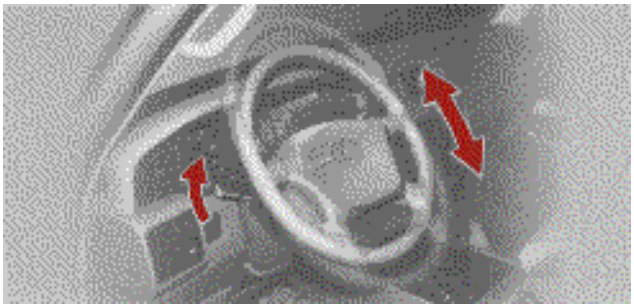

To change the steering wheel angle, hold the steering wheel, pull up the lock release lever, tilt the steering wheel to the desired angle and release the lever.

When the steering wheel is in a low position, it will spring up as you release the lock release lever.

CAUTION

- **Do not adjust the steering wheel while the vehicle is moving.**
- **After adjusting the steering wheel, try moving it up and down to make sure it is locked in position.**

OUTSIDE REAR VIEW MIRRORS

Adjust the mirror so you can just see the side of your vehicle in the mirror.

Be careful when judging the size or distance of any object seen in the outside rear view mirror on the passenger's side. It is a convex mirror with a curved surface. Any object seen in a convex mirror will look smaller and farther away than if seen in a normal flat mirror.

Power rear view mirror control

▶ 1 ***Master switch*** 2 ***Control switch***

To adjust the power rear view mirror, first place the master switch at "L" (left) or "R" (right), and push the control switch on the desired side.

If the engine is not running, the key must be in the "ACC" position for operation of the power rear view mirror.

NOTICE

If ice should jam the mirror, do not operate the control or scrape the mirror face. Use a spray de–icer to free the mirror.

Folding rear view mirrors

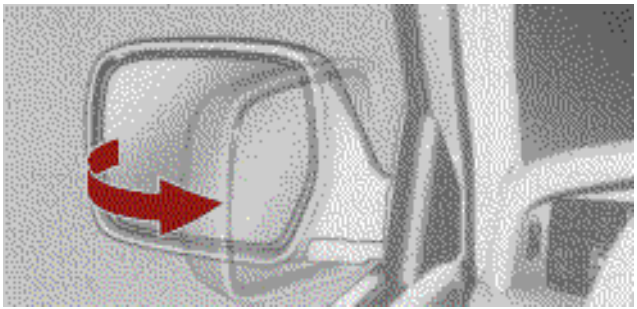

To fold the rear view mirror, push backward.

The rear view mirrors can be folded backward for parking in restricted areas.

INSIDE REAR VIEW MIRROR

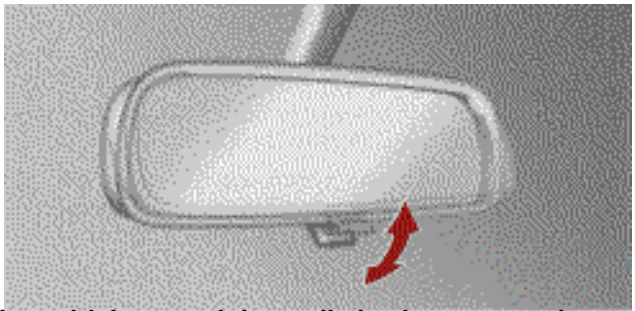

When driving at night, pull the lever toward you to reduce the glare from the headlights of vehicles behind you.

Before adjusting the mirror to the position with most clarity, push the day–night change lever forward (daylight driving position).

Remember that by reducing glare you also lose some rear view clarity.

SEAT BELTS

Seat belt precautions

Lexus recommends that the driver and passengers in the vehicle be properly restrained at all times with the seat belts provided. Failure to do so could increase the chance of injury and/or severity of injury in accidents.

Baby or small child. Use a child restraint system which fits your vehicle. See “Child restraint” for details.

Child. If a child is too large for a child restraint system, the child should sit in the rear seat and must be restrained using the vehicle’s seat belts. According to accident statistics, the child is safer when properly restrained in the rear seat than in the front seat. Do not allow the child to stand up or kneel on either rear or front seats. If the shoulder belt falls across the child’s neck or face, move the child to the center position and use the center lap belt.

Pregnant woman. Lexus recommends the use of a seat belt. Ask your doctor for specific recommendations. The lap belt should be worn securely and as low as possible over the hips and not on the waist.

Injured person. Lexus recommends the use of a seat belt. Depending on the injury, however, first check with your doctor.

CAUTION

Persons should ride in their seats properly wearing their seat belts whenever the vehicle is moving. Otherwise, they are much more likely to suffer serious bodily injury in the event of sudden braking or a collision.

When using the seat belts, observe the following:

- **Use the belt for only one person at a time. Do not use a single belt for two or more people – even children.**
- **Avoid reclining the seatbacks too much. The seat belts provide maximum protection when the seatbacks are in the upright position. (See “Adjusting seatback angle”.)**
- **Be careful not to damage the belt webbing or hardware. Take care that they do not get caught or pinched in the seat or doors.**
- **Inspect the belt system periodically. Check for cuts, fraying, and loose parts. Damaged parts should be replaced. Do not disassemble or modify the system.**
- **Keep the belts clean and dry. If they need cleaning, use a mild soap solution or lukewarm water. Never use bleach, dye, or abrasive cleaners – they may severely weaken the belts.**
- **Replace the belt assembly (including bolts) if it has been used in a severe impact. The entire assembly should be replaced even if damage is not obvious.**

Fastening front and rear outside (second and third seats) seat belts

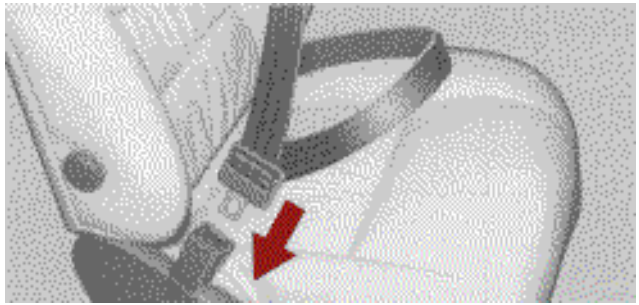

Adjust the seat as needed and sit up straight and well back in the seat. To fasten your belt, pull it out of the retractor and insert the tab into the buckle.

You will hear a click when the tab locks into the buckle.

The seat belt length automatically adjusts to your size and the seat position.

The retractor will lock the belt during a sudden stop or on impact. It also may lock if you lean forward too quickly. A slow, easy motion will allow the belt to extend, and you can move around freely.

When a passenger's shoulder belt is completely extended and is then retracted even slightly, the belt is locked in that position and cannot be extended. This feature is used to hold the child restraint system securely. (For details, see "Child restraint" on page 74.) To free the belt again, fully retract the belt and then pull the belt out once more.

If the seat belt cannot be pulled out of the retractor, firmly pull the belt and release it. You will then be able to smoothly pull the belt out of the retractor.

CAUTION

- **After inserting the tab, make sure the tab and buckle are locked and that the belt is not twisted.**
- **Do not insert coins, clips, etc. in the buckle as this may prevent you from properly latching the tab and buckle.**
- **If the seat belt does not function normally, immediately contact your Lexus dealer.**

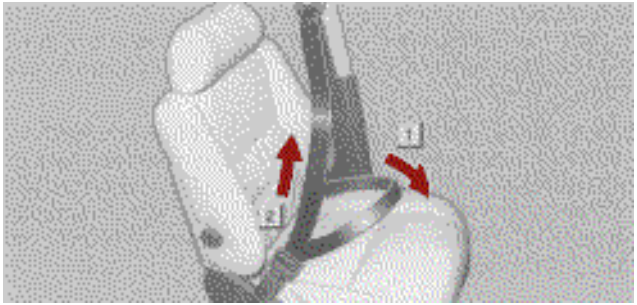

Adjust the position of the lap and shoulder belts.

1 Position the lap belt as low as possible on your hips – not on your waist.

2 Adjust it to a snug fit by pulling the shoulder portion upward through the latch plate.

CAUTION

- **High–positioned lap belts and loose–fitting belts both could increase the chance of injury due to sliding under the lap belt during an accident. Keep the lap belt as low on your hip bone as possible.**
- **For your safety, do not place the shoulder belt under your arm.**

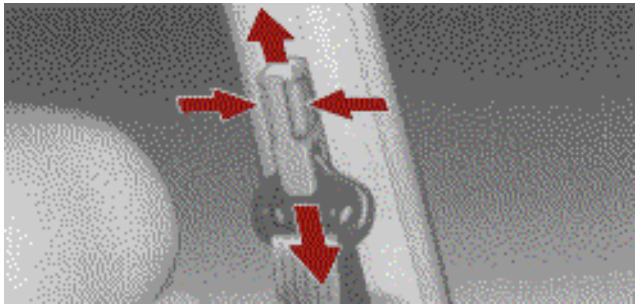

If your vehicle is equipped with an adjustable shoulder anchor, adjust its position to your size.

To raise the anchor position, push the button of the anchor up. To lower the anchor position, pinch the lock release buttons and slide the anchor down. After the adjustment, make sure the anchor is locked in position.

CAUTION

Always make sure the shoulder belt is positioned across the center of your shoulder. The belt should be kept away from your neck, but not falling off your shoulder. Failure to do so could reduce the amount of protection in an accident and increase the chance of injury.

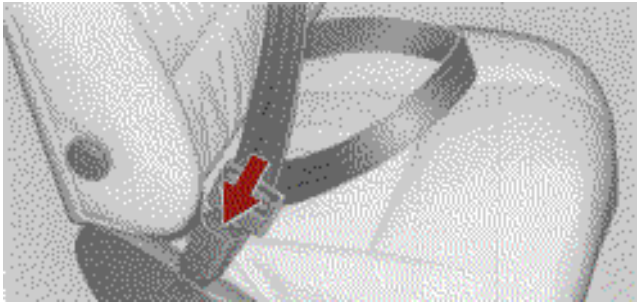

To release the belt, press the buckle release button and allow the belt to retract.

If the belt does not retract smoothly, pull it out and check for kinks or twists. Then make sure it remains untwisted as it retracts.

Rear center (second seat) seat belt

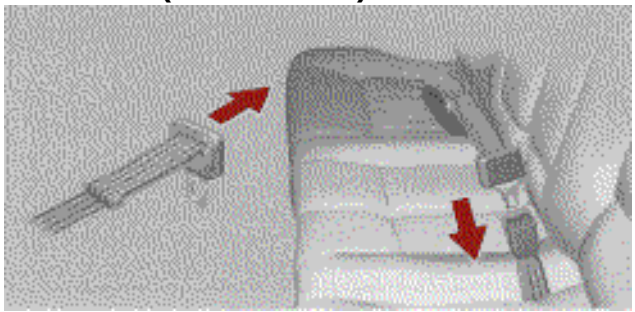

Sit up straight and well back in the seat. To fasten your belt, insert the tab into the buckle.

You will hear a click when the tab locks into the buckle.

If the belt is not long enough for you, hold the tab at a right angle to the belt and pull on the tab.

CAUTION

- **After inserting the tab, make sure the tab and buckle are locked and that the belt is not twisted.**
- **Do not insert coins, clips, etc. in the buckle as this may prevent you from properly latching the tab and buckle.**
- **If the seat belt does not function normally, immediately contact your Lexus dealer.**

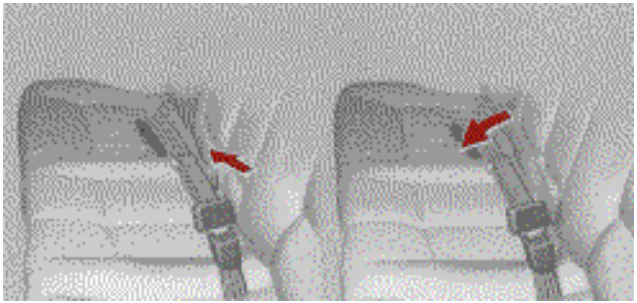

Remove excess length of the belt and adjust the belt position.

To shorten the belt, pull the free end of the belt.

Position the lap belt as low as possible on your hips – not on your waist, then adjust it to a snug fit.

CAUTION

High–positioned and loose–fitting lap belts could increase the chance of injury due to sliding under the lap belt during an accident.

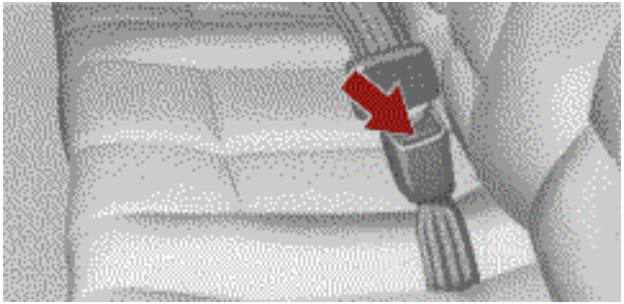

To release the belt, press the buckle release button.

Seat belt extender

If the front or rear outside seat belts cannot be fastened securely because it is not long enough, a personalized seat belt extender is available from your Lexus dealer free of charge.

Please contact your local Lexus dealer so that the dealer can order the proper required length for the extender. Bring the heaviest coat you expect to wear for proper measurement and selection of length. Additional ordering information is available at your Lexus dealer.

CAUTION

When using the seat belt extender, observe the following. Failure to follow these instructions could result in less effectiveness of the seat belt restraint system in case of vehicle accident, increasing the chance of personal injury.

- **Never use the seat belt extender if you can fasten the seat belt without it.**
- **Remember that the extender provided for you may not be safe when used on a different vehicle, or for another person or at a different seating position than the one originally intended for.**

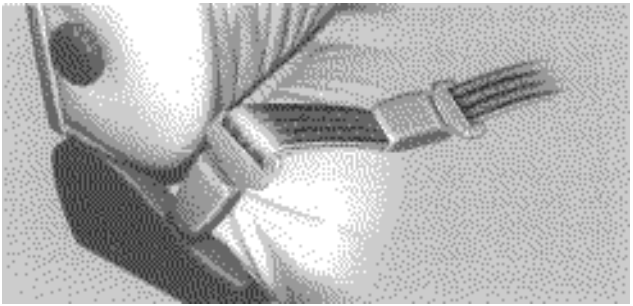

To connect the extender to the seat belt, insert the tab into the seat belt buckle so that the "PRESS" signs on the buckle release buttons of the extender and the seat belt are both facing outward as shown.

You will hear a click when the tab locks into the buckle.

When releasing the seat belt, press on the buckle release button on the extender, not on the seat belt. This helps prevent damage to the vehicle interior and extender itself.

When not in use, remove the extender and store in the vehicle for future use.

CAUTION

- **After inserting the tab, make sure the tab and buckle are locked and that the belt is not twisted.**
- **Do not insert coins, clips, etc. in the buckle as this may prevent you from properly latching the tab and buckle.**
- **If the seat belt does not function normally, immediately contact your Lexus dealer.**

SRS AIRBAGS

The SRS (Supplemental Restraint System) airbags are designed to provide further protection to the driver and front passenger when added to the primary protection provided by the seat belts.

In response to a severe frontal impact, the SRS airbags work together with the seat belts. This prevents or reduces injury by inflating, in order to restrict movement of the head, as well as decrease the likelihood of the driver's or front passenger's head or face directly hitting the steering wheel or dashboard.

The passenger airbag is activated even with no passenger in the front seat.

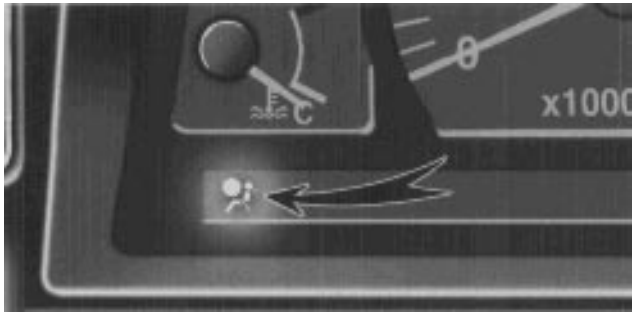

This indicator comes on when the ignition key is turned to the "ACC" or "ON" position. It goes off after about 6 seconds. This means the SRS airbags are operating properly.

The SRS airbag warning light system monitors the airbag sensor assembly, inflators, warning light, interconnecting wiring and power sources.

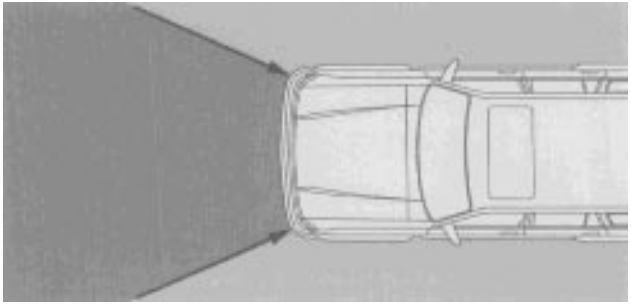

The SRS airbag system is designed to activate in response to a severe frontal impact within the shaded area between the arrows in the illustration.

The SRS airbags will deploy if the severity of the impact is above the designed threshold level, comparable to an approximate 20 km/h (14 mph) collision when impacting straight into a fixed barrier that does not move or deform.

If the severity of the impact is below the above threshold level, the SRS airbags may not deploy.

However, this threshold velocity will be considerably higher if the vehicle strikes an object, such as a parked vehicle or sign pole, which can move or deform on impact, or if it is involved in an underride collision (e.g. a collision in which the nose of the vehicle “underrides”, or goes under, the bed of a truck).

It is possible with collision severity at the marginal level of airbag sensor detection and activation that only one of your vehicle’s two airbags will deploy.

For the safety of all occupants, be sure to always wear seat belts.

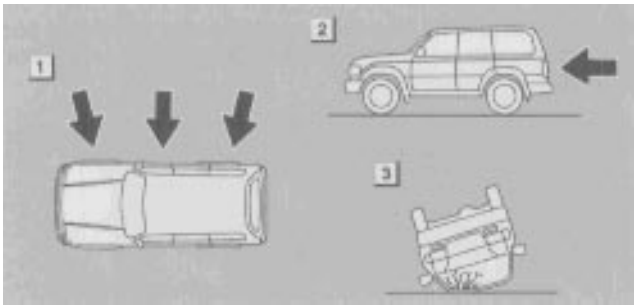

▶ 1 ***Collision from the side***

2 ***Collision from the rear***

3 ***Vehicle roll–over***

The SRS airbags are not designed to inflate if the vehicle is subjected to a side or rear impact, if it rolls over, or if it is involved in a low–speed frontal collision.

▶ 1 ***Airbag sensor assembly***
2 ***Steering wheel pad assembly (airbag and inflator)***
3 ***Passenger airbag module (airbag and inflator)***
4 ***SRS airbag warning light***

The airbag sensor assembly consists of a safing sensor and airbag sensor.

In a severe frontal impact, sensors detect deceleration and the system triggers the airbag inflators. Then a chemical reaction in the inflators momentarily fills the airbags with non–toxic nitrogen gas to help restrain the forward motion of the occupants.

When the airbags inflate, they produce a fairly loud noise and release some smoke along with the nitrogen gas. This is not harmful and does not indicate a fire. Be sure to wash off any residue as soon as possible to prevent minor skin irritation.

Deployment of the airbags happen in a fraction of a second, so the airbags must inflate with considerable force. While the system is designed to reduce serious injuries, it may also cause minor burns or abrasions and swellings.

Parts of the airbag module (steering wheel hub, dashboard) may be hot for several minutes, but the airbags themselves will not be hot. The airbags are designed to inflate only once.

A crash severe enough to inflate the airbags may break the windshield as the vehicle buckles. In vehicles with a passenger airbag the windshield may also be damaged by absorbing some of the force of the inflating airbag.

CAUTION

- **The SRS airbag system is designed only as a supplement to the primary protection of the seat belt systems of the driver and front passenger. The front seat occupants are particularly susceptible to injury if they do not wear their seat belts; when sudden braking or a collision occurs, they may be thrown forward. To obtain further protection in an accident, the driver and all passengers in the vehicle should always wear their seat belts when driving. For instructions and precautions concerning the seat belt system, see “Seat belts” on page 60.**
- **A baby or small child who is too small to use a seat belt should be properly secured in a rear seat using a child restraint system.**

- **Do not use a rear–facing child restraint system in the front seat because the force of the rapid inflation of the passenger airbag may cause severe injury to the child. Vehicles with a passenger airbag display a caution label on the passenger side instrument panel as shown above to remind you not to install a rear–facing child restraint system on the front seat.**

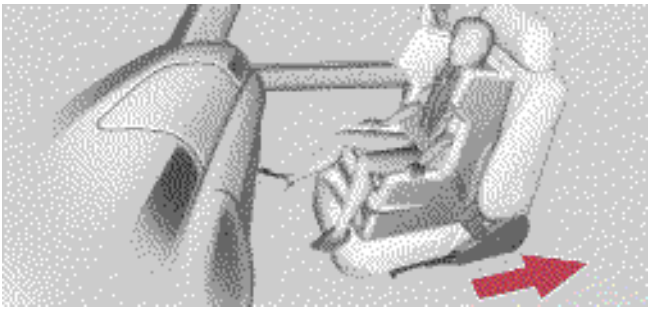

▶ ***Move fully back***

- **When using a forward–facing child restraint system in the front seat, the seat must be moved as far back as possible. For instructions concerning the installation of a child restraint system, see “Child restraint” on page 74.**

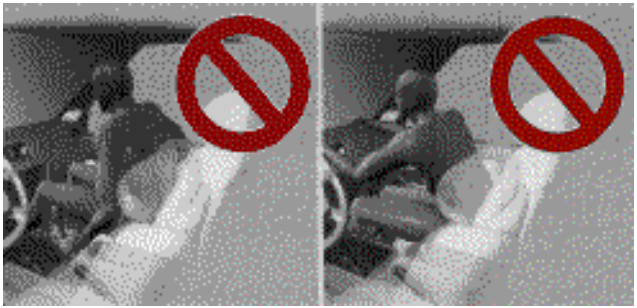

- **Do not sit on the edge of the seat or lean over the dashboard when the vehicle is in use. the airbags inflate with considerable speed and force; you may be severely injured. Sit up straight and well back in the seat, and always use your seat belt.**

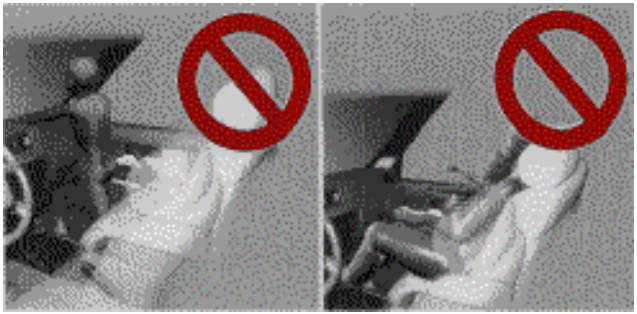

- **Do not allow a child to stand up, or to kneel on the front passenger seat. The airbag inflates with considerable speed and force; the child may be severely injured.**
- **Do not hold a child on your lap or in your arms. Use a child restraint system in the rear seat. For instructions concerning the installation of a child restraint system, see “Child restraint” on page 74.**

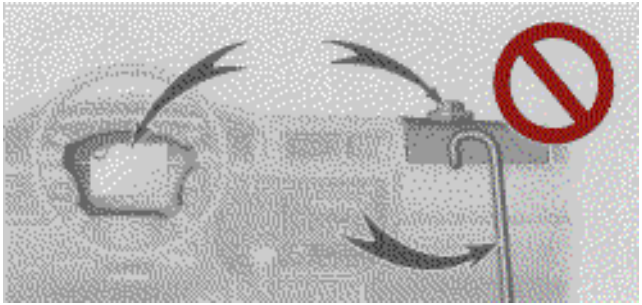

- **Do not put objects on or in front of the dashboard or steering wheel pad that houses the airbag system. They might restrict inflation or cause personal injury as they are projected rearward.**
- **Do not modify, remove or open any component or wiring, such as the steering wheel, column cover, front passenger airbag cover, front passenger airbag or airbag sensor assembly. Doing any of these may cause sudden SRS airbag inflation or disable the system, which could result in personal injury.**

Failure to follow these instructions can result in severe injuries.

NOTICE

Do not perform any of the following changes without consulting your Lexus dealer. Such changes can interfere with proper operation of the SRS airbag system in some cases.

- ***Installation of electronic items such as a mobile two–way radio, cassette tape player or compact disc player.***
- ***Modification of the suspension system.***
- ***Modification of the front end structure.***
- ***Attachment of a grille guard (bull bar, kangaroo bar, etc.), snow plow, winches or any other equipment to the front end.***
- ***Repairs made on or near the front end structure, front console, steering column, steering wheel or dashboard near the front passenger airbag.***

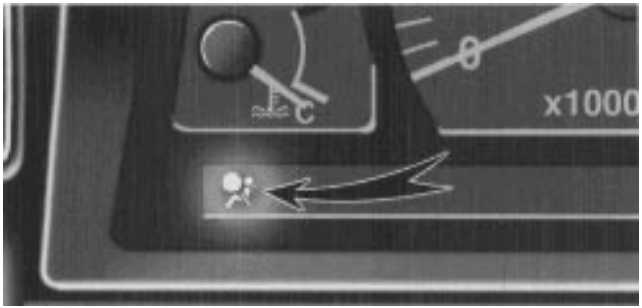

This SRS airbag system has a service reminder indicator to inform the driver of operating problems. If either of the following conditions occurs, this indicates a malfunction of the airbags. Contact your Lexus dealer as soon as possible to service the vehicle.

- The light does not come on when the ignition key is turned to the “ACC” or“ON” position, or remains on.
- The light comes on while driving.

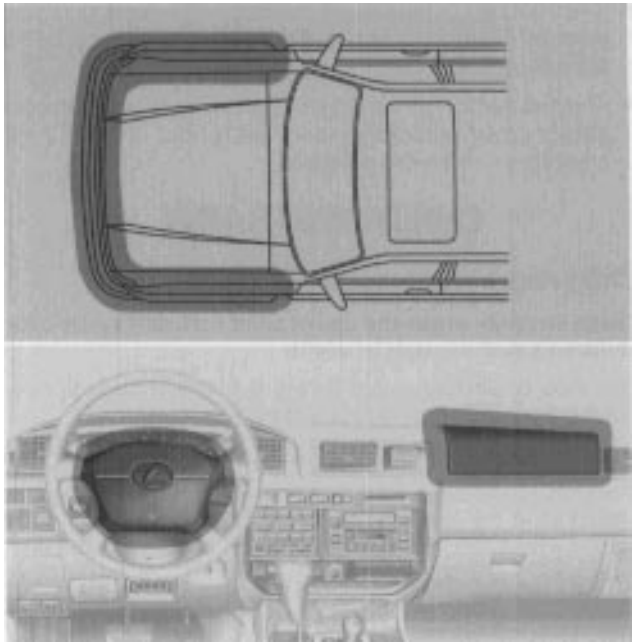

In the following cases, contact your Lexus dealer as soon as possible:

- The SRS airbags have been inflated.

- The front part of the vehicle (shaded in the illustration) was involved in an accident not of the extent to cause the SRS airbags to inflate.
- The pad section of the steering wheel or front passenger airbag cover (shaded in the illustration) is scratched, cracked, or otherwise damaged.

CHILD RESTRAINT

Child restraint precautions

Lexus strongly urges the use of child restraint systems for children small enough to use it.

The laws of all fifty states in the U.S.A. now require the use of a child restraint system.

CAUTION

For effective protection in automobile accidents and sudden stops, children must be properly restrained. Holding a child in your arms is not a substitute for a child restraint system. In an accident, the child can be crushed against the windshield, or between you and the vehicle's interior if you are unrestrained.

Child restraint system

A child restraint system for a small child or baby must itself be restrained on the seat with either the lap belt or the lap portion of the lap/shoulder belt.

The child restraint system should conform to the size of the child and properly fit the vehicle seat. For greater safety, the child restraint system should be installed on the rear seat. According to accident statistics, children are safer when properly restrained in the rear seat than in the front seat.

When installing a child restraint system, follow the instructions provided by the manufacturer of the system. General directions are also provided under the following illustrations.

CAUTION

After installing the child restraint system, make sure it is secured in place. If it is not restrained securely, it may cause injury to the child in the event of a sudden stop or accident.

When not using the child restraint system, keep it secured with the seat belt or place it in the trunk or somewhere other than in the passenger compartment. This will prevent it injuring passengers in the event of a sudden stop or accident.

INSTALLATION ON REAR SEAT CENTER

Do not use a child restraint system which requires the use of a top strap in the second seat center position.

When installing a rear–facing child restraint system, follow the same procedure as when installing a forward–facing child restraint system.

CAUTION

Do not use a rear–facing child restraint system in the rear seat if it interferes with the lock mechanism of the front seats. This may cause severe injury to the child and front passengers in case of sudden braking or a collision.

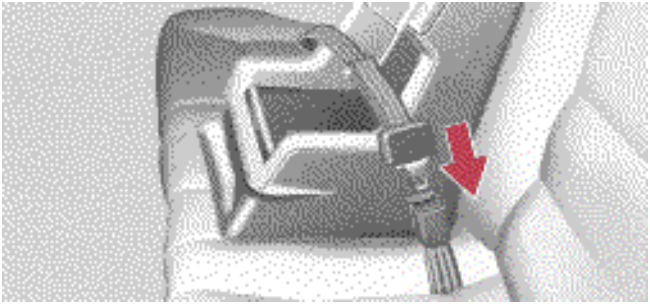

1. Fasten the center lap belt over the child restraint system following the instructions provided by its manufacturer.

CAUTION

- **After inserting the tab, make sure the tab and buckle are locked.**
- **Do not insert coins, clips, etc. in the buckle as this may prevent you from properly latching the tab and buckle.**
- **If the seat belt does not function normally, immediately contact your Lexus dealer.**

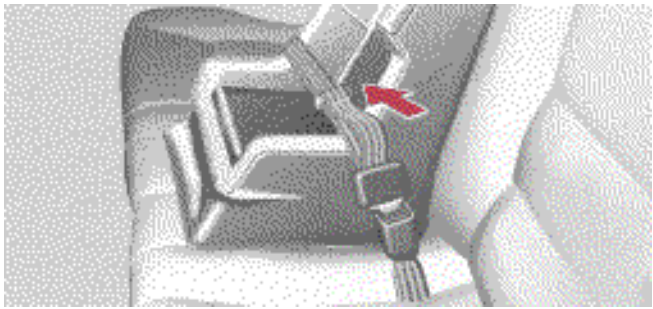

2. Make sure the belt is tight by pulling its free end while you firmly push down the child restraint system.

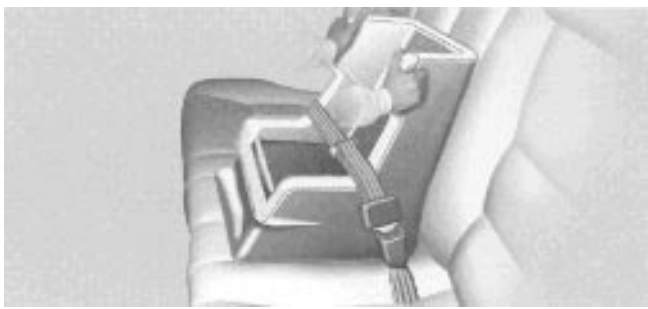

CAUTION

Push and pull the child restraint system in different directions to be sure it is secure.

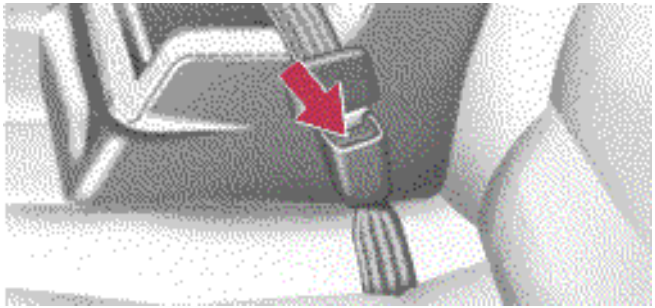

3. To remove the child restraint system, press the buckle–release button.

INSTALLATION ON REAR SEAT OUTSIDE

Do not use a child restraint system which requires the use of a top strap in the second seat outside position.

When installing a rear–facing child restraint system, follow the same procedure as when installing a forward–facing child restraint system.

CAUTION

Do not use a rear–facing child restraint system in the rear seat if it interferes with the lock mechanism of the front seats. This may cause severe injury to the child and front passenger in case of sudden braking or a collision.

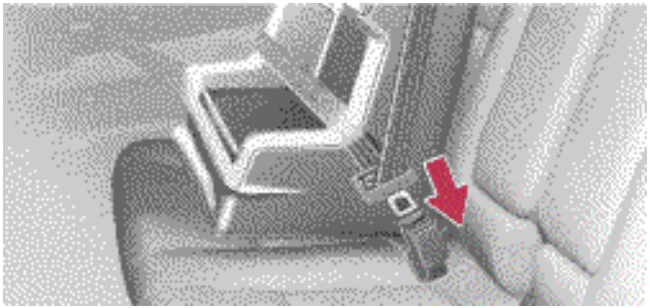

1. Fasten the lap and shoulder belt over the child restraint system following the instructions provided by its manufacturer. Keep the lap portion of the belt tight.

CAUTION

- **After inserting the tab, make sure the tab and buckle are locked.**
- **Do not insert coins, clips, etc. in the buckle as this may prevent you from properly latching the tab and buckle.**
- **If the seat belt does not function normally, immediately contact your Lexus dealer.**

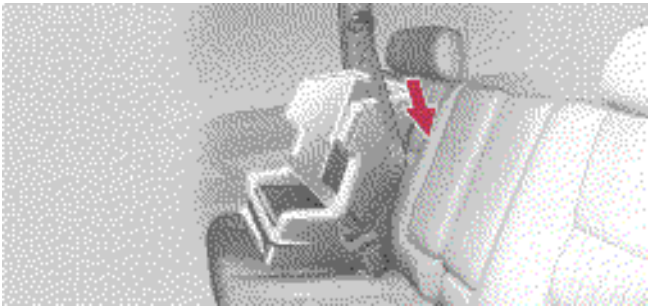

2. Fully extend the shoulder belt to put it in the lock mode.

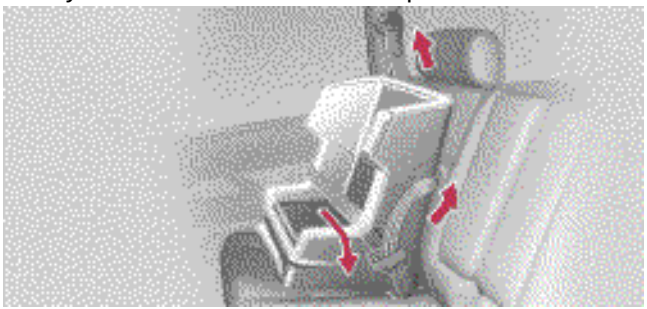

3. Place the shoulder belt between the vehicle seatback and the child restraint system and allow it to retract. To hold the child restraint system securely, let the shoulder belt retract as far as it will go while firmly pushing down the child restraint system.

CAUTION

Make sure the seat belt is securely locked. Also make sure the child restraint system is secure by pushing and pulling it in different directions.

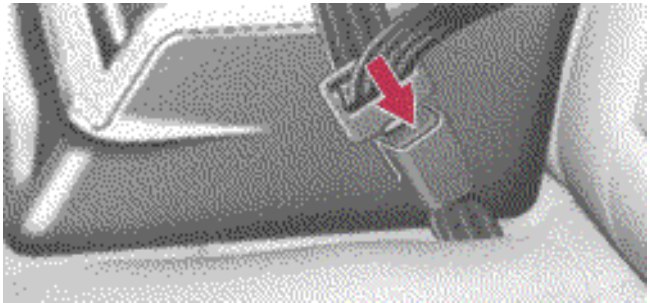

4. To remove the child restraint system, press the buckle–release button and allow the belt to retract.

INSTALLATION ON FRONT SEAT

Lexus recommends installing child restraint systems in the rear seat. Statistics show children are safer when seated in the rear seat.

Do not use a child restraint system which requires use of a top strap in the front seat.

CAUTION

- **Do not use a rear–facing child restraint system in the front seat because the force of the rapid inflation of the passenger airbag may cause severe injury to the child. Vehicles with a passenger airbag display a caution label on the passenger side instrument panel as shown above to remind you not to install a rear–facing child restraint system on the front seat.**

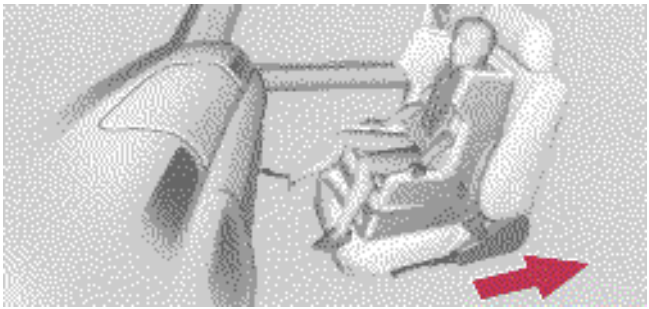

▶ ***Move fully back***

- **When using a forward–facing child restraint system, move the seat as far back as possible.**

1. Fasten the lap and shoulder belt over the child restraint system following the instructions provided by its manufacturer. Keep the lap portion of the belt tight.

CAUTION

- **After inserting the tab, make sure the tab and buckle are locked.**
- **Do not insert coins, clips, etc. in the buckle as this may prevent you from properly latching the tab and buckle.**
- **If the seat belt does not function normally, immediately contact your Lexus dealer.**

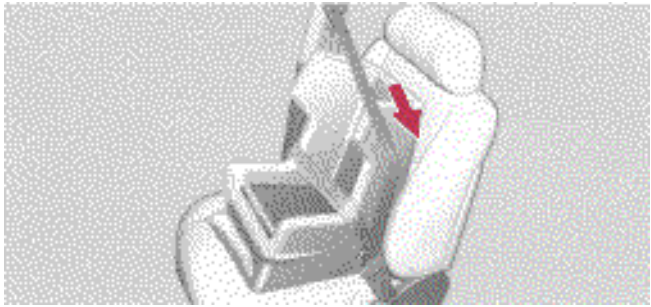

2. Fully extend the shoulder belt to put it in the lock mode.

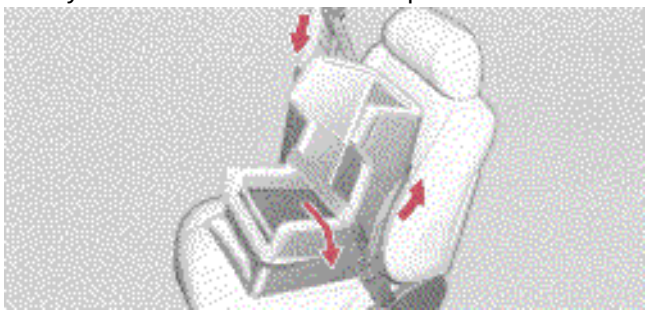

3. Place the shoulder belt between the vehicle seatback and child restraint system and allow it to retract. To hold the child restraint system securely, let the shoulder belt retract as far as it will go while firmly pushing down the child restraint system.

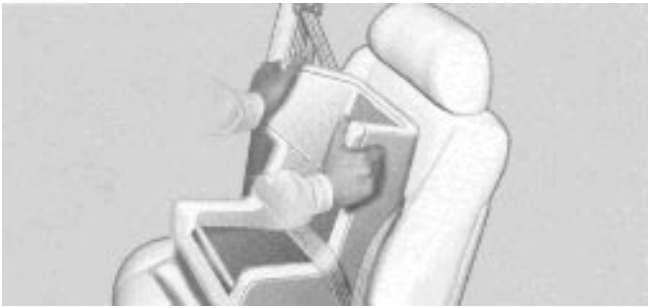

CAUTION

Make sure the seat belt is securely locked. Also make sure the child restraint system is secure by pushing and pulling it in different directions.

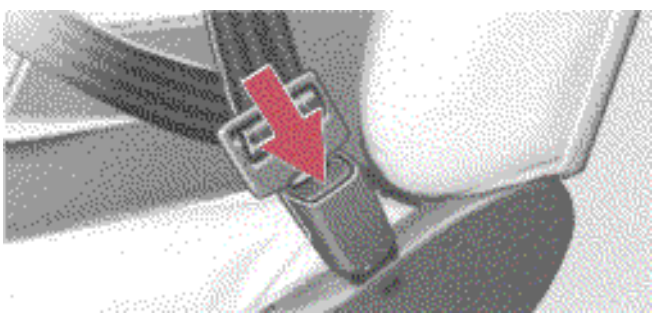

4. To remove the child restraint system, press the buckle release button and allow the belt to retract.

INSTRUMENTS AND CONTROLS

Theft deterrent

Theft deterrent system ---------- 84
Theft prevention labels ---------- 87

THEFT DETERRENT SYSTEM

To deter theft of the vehicle, this system is designed to sound an alarm and keep the engine from being started if any door is opened while the system is armed. An alarm will also sound if window glass is broken or if power to the system is interrupted then restored while it is armed.

When triggered, the vehicle's horn sounds and the exterior and interior lights flash in a unique pattern. Perhaps more importantly, the vehicle's starter is disabled at the same time, preventing engine start.

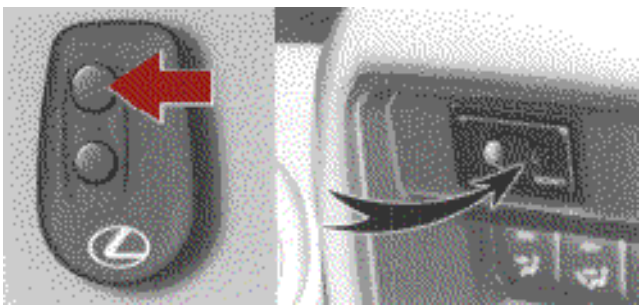

Arming the system

1. Turn the ignition key to the "LOCK" position and remove it. (The system will not arm it the key is left in the ignition switch.)

2. Exit the vehicle and close all of the doors. (The system will not arm if any door is open.)

3. Push the transmitter's top button.

At the same time the "Theft deterrent system" arms, the doors will lock, the tail and marker lights will flash once, and the buzzer will "chirp" once.* Also, the vehicle's interior lights will come on for 3 seconds**, and the status monitor's LED will begin to flash steadily.

After using the transmitter to arm the system and lock the doors, you must use it to unlock the doors and disarm the system. Otherwise, the system will be triggered and an alarm will sound.

Note: Manually locking the doors by key outside the vehicle will not cause the "Theft deterrent system" to arm. The "Theft deterrent system" can only be armed and disarmed using the transmitter.

4. After confirming that the system is armed (tail and marker lights flash once the buzzer "chirps" once), you may depart from the vehicle.

Never leave anyone inside the vehicle when you arm the system, because opening a door will cause the alarm to sound.

* If a door is open when you push the transmitter's top button the "Theft deterrent system" will not arm (and the doors will not lock). Instead, the buzzer will sound for up to 10 seconds or until the open door is closed securely.

** So long as the interior light switch is set to the "DOOR" position.

When the system is armed

ALARM TRIGGERING

While the system is armed, the alarm will sound and the vehicle's starter will be disabled under the following conditions:

- If any of the doors are opened.
- If the window glass is struck and/or broken.
- If power to the system is interrupted (for example, due to a dead battery or a blown fuse) then restored.

After about 1 minute, the alarm will automatically stop and reset, but the vehicle's starter will remain disabled until the system is disarmed.

ALARM TRIGGERING BY THE GLASS BREAKAGE SENSOR

A specially tuned microphone is mounted in the status monitor next to the LED. This microphone is tuned to detect the sound of tapping on or breaking of the vehicle's window glass. The sensor has been specifically adjusted by the factory for your vehicle.

The glass breakage sensor triggers the system in two ways:

1. When the sound of tapping or breaking of glass is detected, the system will first sound the alarm 3 times as a warning.
2. If the glass is tapped on or broken within 5 seconds of the first detection, the system will trigger for about 1 minute.

REACTIVATING THE SYSTEM

After the alarm has been triggered, the system will reset itself. The alarm will sound again under the same circumstances as listed in "Alarm Triggering". Once armed, the system can be triggered and reset 10 times and the alarm will sound. After the system has been triggered 10 times, the alarm will no longer sound, but the vehicle's starter will continue to remain disabled.*

* After disarming then arming the system, the alarm can sound again.

STOPPING THE ALARM

Push the transmitter's top button once.

The alarm will stop, the doors will unlock, and the vehicle's starter will work again.

OR

Insert the key into the ignition switch, and turn it to "ON" twice. ("ON" → "LOCK" → "ON")

The alarm will stop, and the vehicle's starter will work again.

Note: Pushing and holding the transmitter's top button for more than 2 seconds activates the Panic Mode. For additional information, see "Sounding an alarm (Panic Mode)" on page 9.

Disarming the system

Push the transmitter's top button once.

This cancels the system completely, and the doors may be opened.

At the same time the system is cancelled, the doors unlock, the buzzer "chirps" twice and the tail and marker lights flash twice.* Also, the status monitor's LED will stop flashing and the vehicle's interior lights come on for 30 seconds or until all the doors are closed.**

* If the tail and marker lights flash 3 times and the buzzer "chirps" 3 times, this indicates that the system was triggered and the alarm sounded while you were away from the vehicle.

** So long as the interior light switch is set to the "DOOR" position.

Automatic re–arming

When the system is disarmed with the transmitter, all the doors will unlock at the same time. If no door is opened within 30 seconds, they will automatically re–lock and the "Theft deterrent system" will automatically re–arm.

Bypassing the "Theft deterrent system"

If you lock the vehicle's doors in either of the following two ways, you will bypass the "Theft deterrent system" and the system will not be armed:

1. Using the power door lock switch inside the vehicle.
2. Using the key in the door lock cylinder outside the vehicle.

When the system has been bypassed, you may use the transmitter to unlock the doors, but you must push the transmitter's top button twice. (The first time the button is pushed, the "Theft deterrent system" arms.)

Power loss memory

If power to the system is interrupted (or example, due to a dead battery or a blown fuse) then restored, the alarm will sound. The doors will not automatically re–lock it they were unlocked before power was restored.

If power to the system is interrupted then restored while the system is not armed, the feature settings will be retained in memory.

Status Monitor LED

The status monitor's LED gives the following two indications:

FLASHING – The system is armed. You need the transmitter to disarm the system and unlock the doors.

OFF – The system is inactive. You may open any door.

Testing the system

1. Open all of the windows.

2. Arm the system as described in "Arming the system".

The doors lock, and the status monitor's LED will flash.

3. Open a door from the inside

The system will be triggered when the door is opened and the alarm will sound.

4. Push the top button on the remote control transmitter.

This will cancel the alarm.

5. Repeat steps 1 through 4 for the other doors.

If the system does not work properly, have it checked by your Lexus dealer.

THEFT PREVENTION LABELS

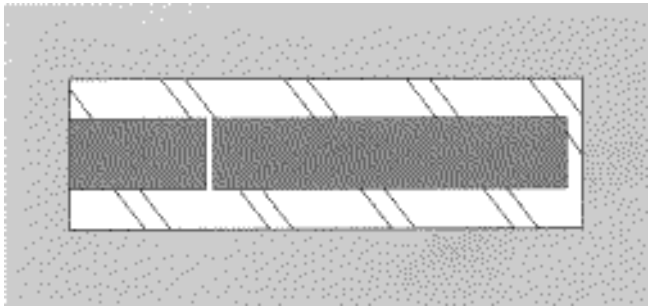

Your new vehicle carries theft prevention labels which are approximately 56 mm (2.20 in.) by 16 mm (0.63 in.).

The purpose of these labels is to reduce the incidence of vehicle thefts by facilitating the tracing and recovery of parts from stolen vehicles. The label is designed so that once it is applied to a surface, any attempt to remove it will result in destroying the integrity of the label. Transferring these labels intact from one part to another will be impossible.

NOTICE

You should not attempt to remove the theft prevention labels as it may violate certain state or federal laws.

SECTION 2

AIR CONDITIONING AND AUDIO

Automatic air conditioning controls ---------- 90
Rear heater controls ---------- 98
Audio system ---------- 99

AUTOMATIC AIR CONDITIONING CONTROLS

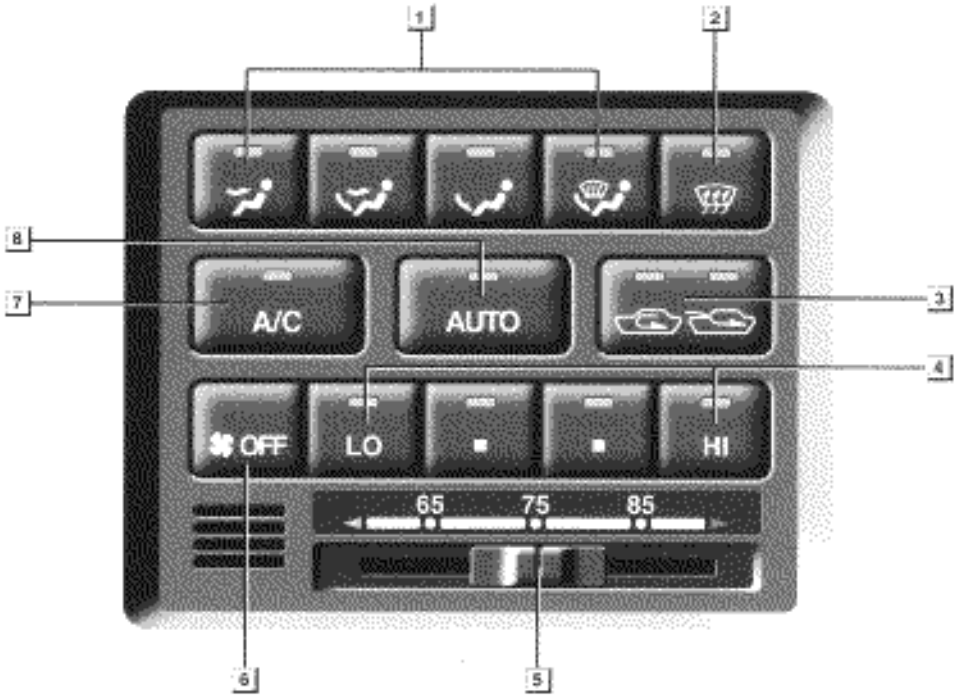

1. ***Air flow control buttons***
2. ***Front windshield button***
3. ***Air intake control button***
4. ***Fan speed control buttons***
5. ***Temperature control lever***
6. ***OFF button***
7. ***Air conditioning on–off button***
8. ***Automatic control button***

The automatic air conditioning automatically maintains the set temperature.

This air conditioning features automatic fan speed and air flow control which automatically selects the most suitable fan speed and air flow to control the temperature. The ignition key must be in the “ON” position.

NOTICE

To prevent the battery from being discharged, do not leave the air conditioning on longer than necessary when the engine is not running.

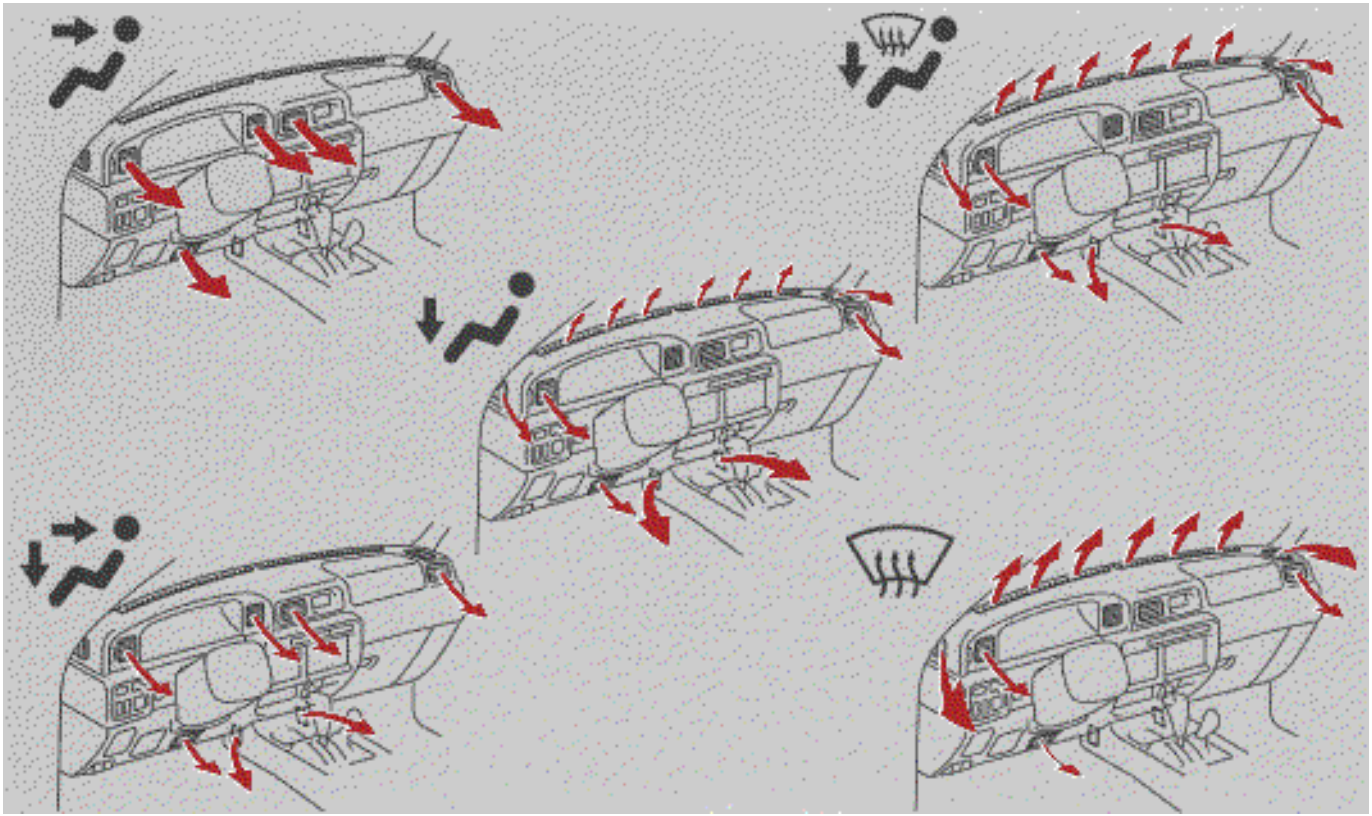

▶ ***Air flow selection***

(a) Climate control

SETTING OPERATION – automatic control

1. Push in the “AUTO” button.

Air flow quantity, switching of the diffusers, on–off of the air conditioning, and switching of the air intake between RECIRCULATED AIR and OUTSIDE AIR are automatically adjusted. The operation status is shown by each indicator light on the button.

When one of the manual control buttons is depressed while operating in automatic mode, the operation corresponding to the button depressed is set. Other conditions continue to be adjusted automatically.

Push the “OFF” button to turn the air conditioning off.

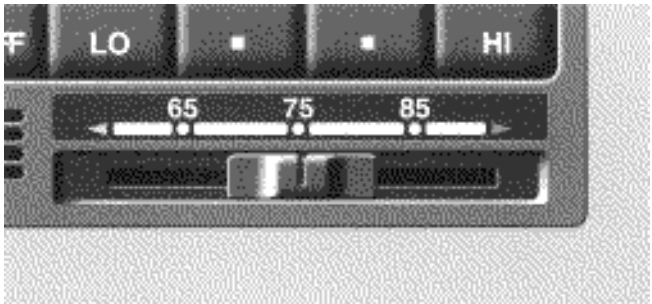

2. Use the temperature control lever to set the desired temperature.

Slide the lever to the right for higher temperature and to the left for lower temperature.

SETTING OPERATION – manual control

If manual air flow selection is desired –

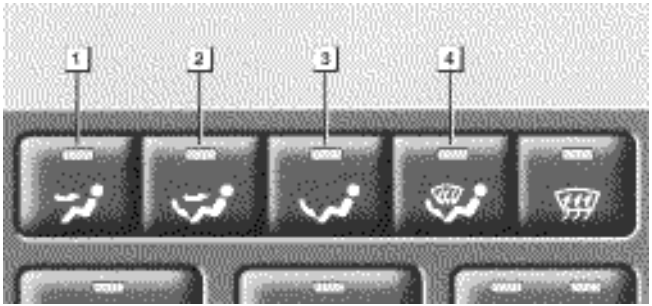

The outlets from which air is delivered can be selected manually by pressing in the appropriate air flow control button. The function of each button is as follows.

1 **Panel** – Air flows mainly from the instrument panel vents.

2 **Bi–level** – Air flows from both the floor vents and the instrument panel vents.

3 **Floor** – Air flows mainly from the floor vents.

4 **Floor/Windshield** – Air flows mainly from the floor vents and windshield vents.

If manual fan speed control is desired –

▶ 1 ***Low speed*** 2 ***Lower middle speed***
3 ***Higher middle speed*** 4 ***High speed***

The fan speed can be set to your desired speed by pushing the appropriate fan speed control button. The higher the fan speed is, the more air is delivered. Pushing the “OFF” button turns off the fan.

To remove exterior windshield frost, use the high speed setting.

If manual switching of air intake is desired –

The air intake control button is used to switch the air intake between the OUTSIDE AIR mode and RECIRCULATED AIR mode.

With the button in the OUTSIDE AIR mode, the OUTSIDE AIR mode indicator light will come on and the system will take fresh outside air into the vehicle.

If quick circulation of cooled air is desired, push the air intake control button for RECIRCULATED AIR. The RECIRCULATED AIR mode indicator light will come on.

For normal use, it is best to keep the air intake control button set to OUTSIDE AIR mode. If recirculated air is used during heating, the windows will fog up more easily.

If manual on–off of the air conditioning is desired –

Push the “A/C” button to turn the air conditioning on and push it again to turn the air conditioning off.

If the system is used for ventilation, heating in dry weather or removing frost or exterior fog on the windshield, turn the air conditioning off once it is no longer required. This will improve fuel economy. The air conditioning can be used for year–round automatic temperature control including cooling and dehumidifying operation.

(b) Windshield defogging and defrosting

To remove interior fog on the windshield –

Push the “FRONT WINDSHIELD” button.

To remove frost or exterior fog on the windshield –

1. Place the temperature control lever at the maximum temperature.
2. Push the “FRONT WINDSHIELD” button.
3. Push the “HI” button of the fan speed control button to obtain a maximum air flow.

When the “FRONT WINDSHIELD” button is pushed while operating in automatic mode, the air conditioning is set to operate and the OUTSIDE AIR mode is set.

If you push the “FRONT WINDSHIELD” button once again while in the FRONT WINDSHIELD mode, the mode then returns to the last mode used.

CAUTION

Do not use the “FRONT WINDSHIELD” button during cooled air operation in extremely humid weather. The difference between the temperature of the outside air and that of the windshield could cause the outer surface of the windshield to fog up blocking your vision.

(c) Operating tips

- Make sure the air inlet grilles in front of the windshield are not blocked by leaves or other obstructions.
- If air flow control is not satisfactory, check the dashboard vents. (See “Side vents” and “Lower vent”.)
- To help cool down the interior after parking in the hot sun, drive for the first few minutes with the windows open. After the excess heat has blown away, close the windows.
- When driving on dusty roads, close all windows. If dust thrown up by the vehicle is still drawn into the vehicle after closing the windows, it is recommended that the air intake control button be left to the OUTSIDE AIR mode and the fan speed control button be pressed to anywhere except the “OFF” button.
- If following another vehicle on a dusty road, or driving in windy and dusty conditions, it is recommended that the air intake control button be temporarily pressed in to the RECIRCULATED AIR mode, which will close off the outside passage and prevent outside air and dust from entering the vehicle interior.

Side vents

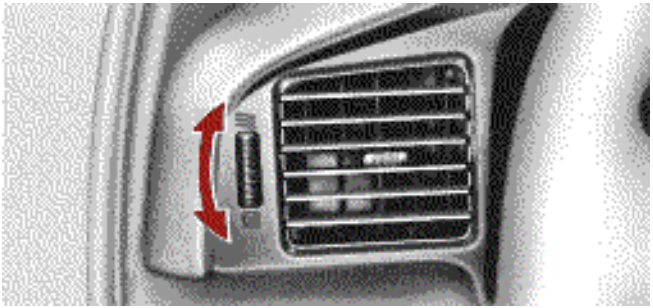

The side vents may be opened or closed as shown.

Lower vent

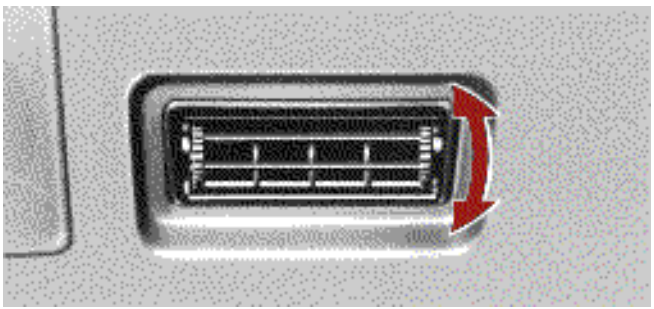

The lower vent may be opened or closed as shown.

REAR HEATER CONTROLS

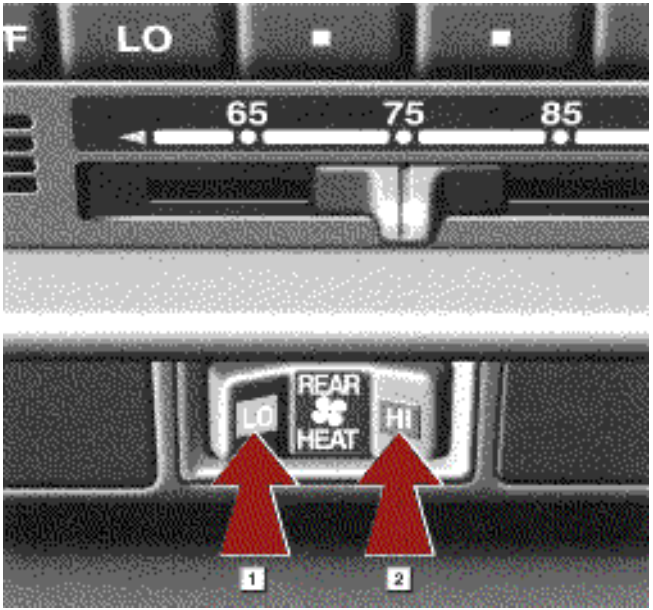

▶ 1 ***Low speed*** 2 ***High speed***

To heat the vehicle interior on the rear side, push the fan speed control switch on either side.

The ignition switch must be in the “ON” position.

Pushing lightly on the opposite side will turn it off.

AUDIO SYSTEM

Quick reference for your audio system

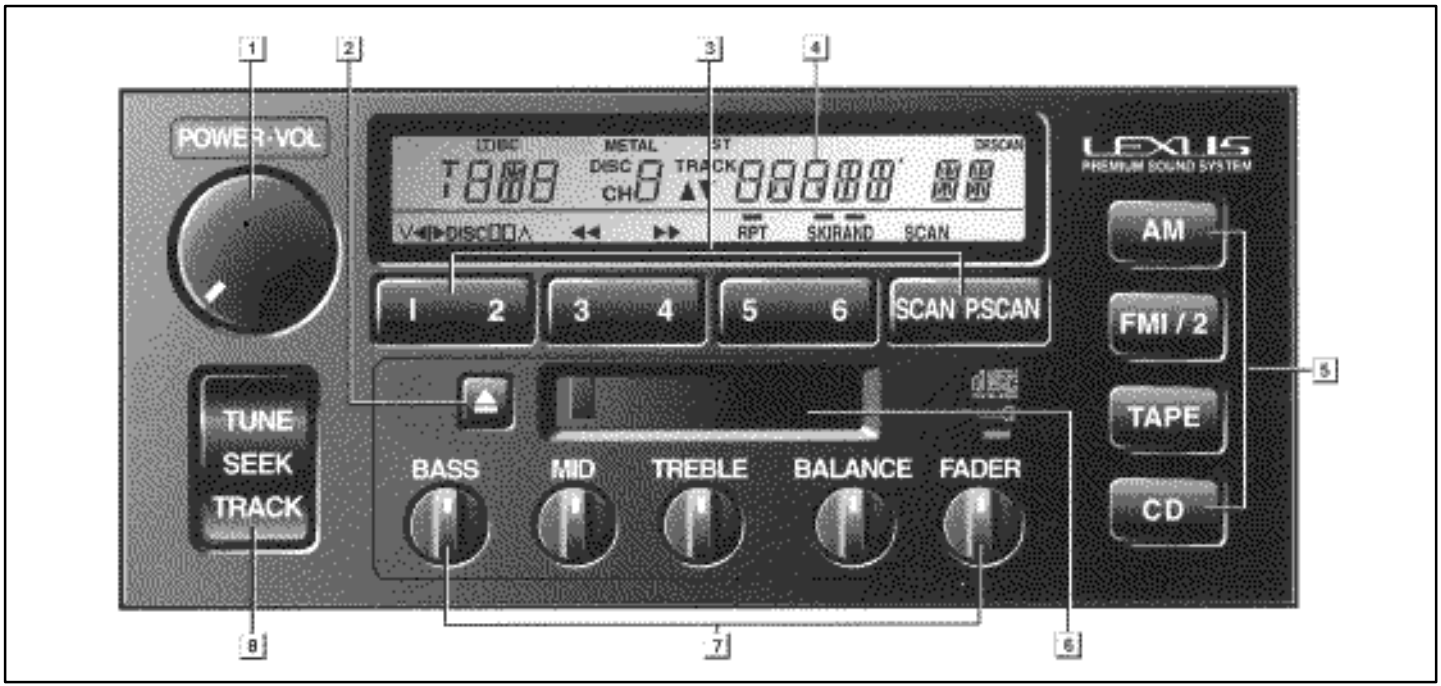

▶ ***The "CD" button works only when your Lexus is equipped with an automatic changer.***

1 **Turning the system on and adjusting volume**
(See page 101 for details.)

2 **Stopping and ejecting a cassette tape**
(See page 107 for details.)

3 **Function buttons**

1–6: Station selector buttons
(See page 105 for details.)

SCAN: Scan tuning
(See page 106 for details.)

P.SCAN: Preset scan tuning
(See page 106 for details.)

4 **Display of functions in TAPE mode**

◀ I ▶: Side change
(See page 108 for details.)

DOLBY NR
(See page 107 for details.)

◀◀: Rewinding
(See page 108 for details.)

▶▶: Fast forwarding
(See page 108 for details.)

RPT: Automatic repeat
(See page 108 for details.)

SKIP: Automatic skip of blank portions of tape
(See page 108 for details.)

SCAN: Scan selection
(See page 109 for details.)

4 **Display of functions in CD mode**

∨ ∧: Disc selection
(See page 112 for details.)

◀◀: Reversing
(See page 114 for details.)

▶▶: Fast forwarding
(See page 114 for details.)

RPT: Automatic repeat
(See page 114 for details.)

RAND: Random access
(See page 114 for details.)

SCAN: Scan selection
(See page 113 for details.)

5 **Mode selectors**
(See page 101 for details.)

6 **Cassette tape slot**
(See page 107 for details.)

7 **Tone and balance knobs**
(See page 102 for details.)

8 **Radio mode:** Frequency tuning
(See pages 104 or 119 for details.)

TAPE mode: Direct access to a desired program
(See page 109 for details.)

CD mode: Direct access to a desired program
(See page 114 for details.)

Using your audio system: some basics

This section describes some of the basic features of the Lexus audio system. Some information may not pertain to your system.

Your audio system works when the ignition key is in the “ACC” or “ON” position.

NOTICE

To prevent the battery from being discharged, do not leave the car audio on longer than necessary when the engine is not running.

(a) Turning the system on and off

Push this knob to turn the audio system on and off. Turn this knob to adjust the volume.

The system turns on in the last mode used.

Push “AM”, “FM1/2”, “TAPE” or “CD” to turn on that mode. The selected mode turns on directly.

Push these buttons if you want to switch from one mode to another.

If the tape or disc is not set, the cassette player or compact disc player does not turn on.

You can turn off the cassette player by ejecting the cassette tape. If the audio system was previously off, then the entire audio system will be turned off when you eject the cassette tape. If another function was previously playing, it will come on again.

In the "TAPE" or "CD" mode, the applicable functions are shown in the lowest part of the display. Push the switch just below to turn on each function.

(b) Tone and balance

How good an audio program sounds to you is largely determined by the mix of the treble, mid–range, and bass levels. In fact, different kinds of music and vocal programs usually sound better with different mixes of treble, mid–range, and bass.

A good balance of the left and right stereo channels and of the front and rear sound levels is also important.

Keep in mind that if you are listening to a stereo recording or broadcast, changing the right/left balance will increase the volume of one group of sounds while decreasing the volume of another.

"BASS" knob: Use this knob to adjust low–pitched tones.

"MID" knob: Use this knob to adjust mid–pitched tones.

"TREBLE" knob: Use this knob to adjust high–pitched tones.

"BALANCE" knob: Use this knob to adjust the sound balance between the right and left speakers.

"FADER" knob: Use this knob to adjust the sound balance between the front and rear speakers.

(c) Your power antenna

The antenna automatically extends when the radio mode is on and retracts when the radio mode is off.

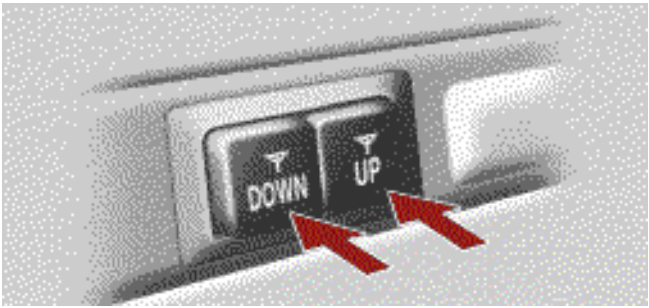

To adjust the height of the antenna manually, push the switch.

Clean the antenna mast periodically with a clean dry cloth.

CAUTION

Before extending the antenna, confirm that no one is close enough to get injured.

NOTICE

To prevent damage to the antenna, make sure it is retracted before driving your vehicle through an automatic car wash.

(d) Your cassette player

When you insert a cassette, the exposed tape should be to the right.

NOTICE

Do not oil any part of the cassette player, and do not insert anything except a cassette tape into the slot.

(e) Your automatic changer

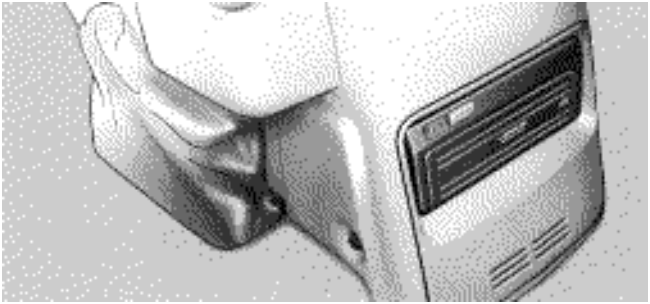

If your Lexus is equipped with an automatic changer, it can play selected discs or continuously play all the discs set in the magazine.

When you set discs into the magazine, make sure they face the correct way. If not, the player will display “ERR” and the disc number.

NOTICE

Never try to disassemble or oil any part of the compact disc player. Do not insert anything except a compact disc into the magazine.

The player is intended for use with 12 cm (4.7 in.) discs only.

Radio operation

(a) Listening to the radio

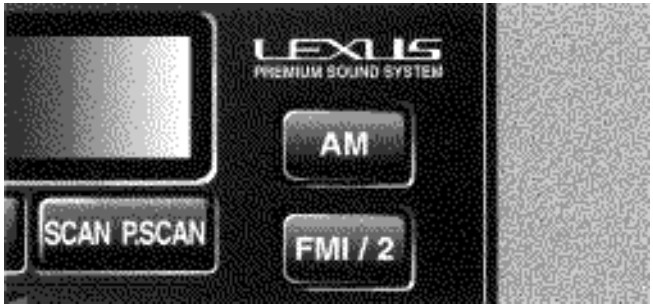

Push these buttons to choose either an AM or FM station.

“AM”, “FM1” or “FM2” appears on the display.

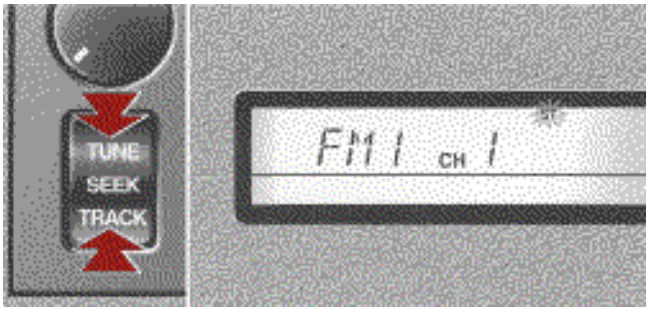

Push this button on the upper side to step up the station band or on the lower side to step down.

Your radio automatically changes to stereo reception when a stereo broadcast is received. “ST” appears on the display. If the signal becomes weak, the radio reduces the amount of channel separation to prevent the weak signal from creating noise. If the signal becomes extremely weak, the radio switches from stereo to mono reception. In this case, “ST” disappears from the display.

(b) Presetting a station

1. **Tune in the desired station.**
2. **Push one of the station selector buttons (1–6) and hold it until a beep is heard. This sets the station to the button and the button number (1–6) appears on the display.**

Each button can store one AM station and two FM stations. To change the preset station to a different one, follow the same procedure.

The preset station memory is cancelled when the power source is interrupted by battery disconnection or a blown fuse.

(c) Selecting a station

Your Lexus has an electronic tuning radio (ETR). Tune in the desired station using one of the following methods.

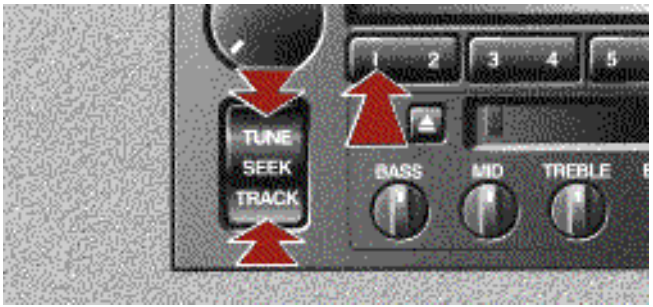

Preset tuning: Push the button (1–6) for the station you want. The button number (1–6) and station frequency appear on the display.

Manual tuning: Push the “TUNE SEEK” button briefly. Each time you push the button, the radio will step up or down to another frequency.

Seek tuning: Push the “TUNE SEEK” button and hold it until you hear a beep. The radio will begin seeking up or down for a station of the nearest frequency and will stop on reception. Each time you push the button, the stations will be searched out one after another.

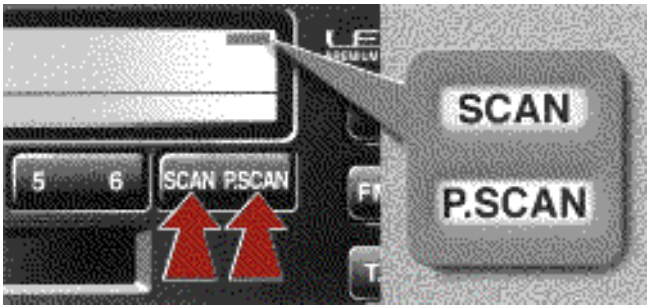

To scan all the frequencies: Push the “SCAN” button. “SCAN” appears on the display. The radio will find the next station up the band, stay there for a few seconds, and then scan again. To select a station, push the “SCAN” button a second time.

To scan the preset stations: Push the “P.SCAN” button. “P.SCAN” appears on the display. The radio will tune in the next preset station up the band, stay there for a few seconds, and then move to the next preset station. To select a station, push the “P.SCAN” button a second time.

Cassette tape player operation

(a) Playing a cassette tape

When you insert a cassette tape, the exposed tape should be to the right.

The player will automatically start when you insert a cassette tape. At this time, “TAPE” appears on the display.

If a metal or chrome equivalent cassette tape is put in the cassette player, the player will automatically adapt to it and “METAL” appears on the display.

To stop or eject the cassette tape, push the “EJECT” button.

Auto–reverse feature: After the cassette player reaches the end of a tape, it automatically reverses and begins to play the other side, regardless of whether the cassette was playing or fast forwarding.

If a cassette is already in the slot, push the “TAPE” button.

Dolby Noise Reduction* feature: If you are listening to a tape that was recorded with Dolby* B or C Noise Reduction, push the button by the double–D symbol until the appropriate symbol appears on the display.

The Dolby B NR mode reduces tape noise by about 10 dB. The Dolby C NR mode reduces tape noise by another 10dB or about 20 dB total. For best sound reproduction, select the same NR mode that was used to record the tape.

To play a tape recorded without Dolby NR, push the button until the symbol disappears from the display.

* Dolby noise reduction manufactured under license from Dolby Laboratories Licensing Corporation. “DOLBY” and the double–0 symbol are trademarks of Dolby Laboratories Licensing Corporation.

(b) Manual program selection

"Program" button: Push the "◀ | ▶" button to select the other side of a cassette tape. The display indicates which side is currently selected (▲ indicates top side, ▼ indicates bottom side).

"Rewind" button: Push the "◀◀" button to rewind a tape. "REW" appears on the display.

To stop rewinding, push the same button or "TAPE" button.

"Fast forward" button: Push the "▶▶" button to fast forward a cassette tape. "FF" appears on the display.

To stop fast forwarding, push the same button or "TAPE" button.

(c) Automatic program selection

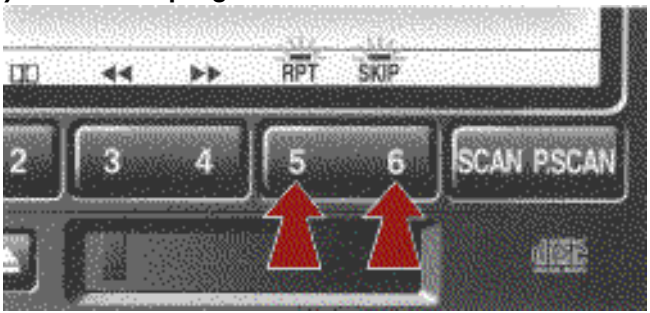

"RPT" button: The repeat feature automatically replays the current program.

Push the "RPT" button while the program is playing. When the program ends, it will automatically be rewound and replayed. Push the button again to turn off the repeat feature.

There must be at least 5 seconds of blank space between programs for the repeat feature to work correctly.

"SKIP" button: The skip feature allows you to fast forward past long stretches of blank tape. This is especially useful at the end of cassettes.

Push the "SKIP" button. The player will automatically skip any blank portions of 15 seconds or more and play the next program. To cancel it, push the button once again.

“SCAN” button: Push the “SCAN” button. “SCAN” appears on the display. The player will fast forward to the next program, play it for 12 seconds, and then scan again. To select a program, push the “SCAN” button a second time.

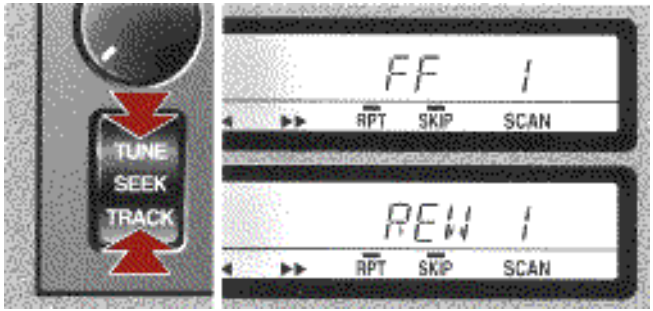

“Automatic program selection” button: The automatic program selection feature allows you to program your cassette player to skip forward or backward to locate the song you want to hear. You can skip up to nine programs at at time.

Push this button on the upper side to skip forward. “FF” and the number will appear on the display. Push the button until the number you want to skip appears on the display. After that, the player will automatically skip forward.

When the end of the tape is reached, the player automatically reverses sides and resumes normal play.

Push this button on the lower side to skip backward. Push the button until “REW” and the number you want to skip appear on the display.

- If you set “REW 1”, the player will rewind to the beginning of the current program.
- When counting the number of programs you want to rewind, remember to count the current program as well. For example, if you want to rewind to a song that is two before the song you are listening to, push this button until “REW 3” appears on the display.

When the beginning of the tape is reached, the player automatically resumes normal play.

There must be at least 5 seconds of black space between programs for this feature to work correctly.

“RPT”, “SKIP” or “Automatic program selection” features: These features may not work well with some spoken word, live or classical recordings.

Compact disc player operation

The compact disc player is an optional accessory that your vehicle is pre–wired to accept. Although your audio system has a CD button, your vehicle may or may not be equipped with a CD player. Please contact your dealer for additional details if you would like to have the optional CD player installed.

(a) Inserting compact discs

1. Push this button to eject the magazine.

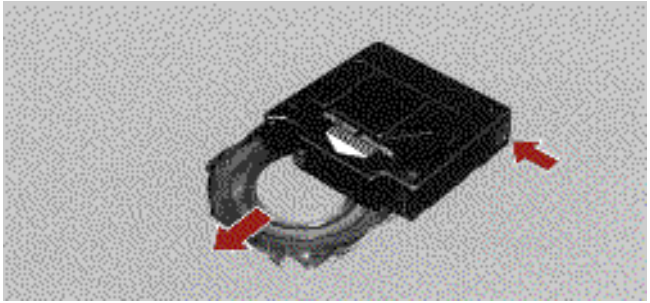

2. Pull out the tray while pushing the lock release button.

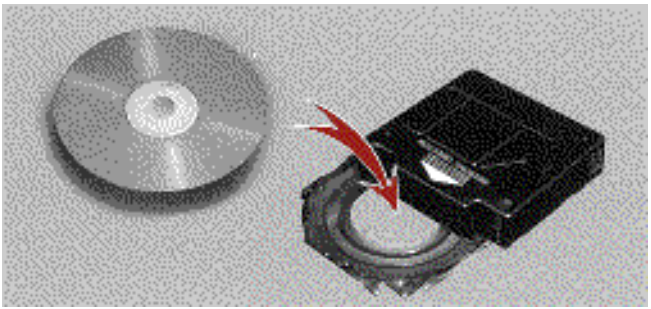

3. Put a disc on the tray with its label face down and push the tray back into the magazine.

If the label faces up, the disc cannot be played. In this case, “ERR” and the disc number appears on the display.

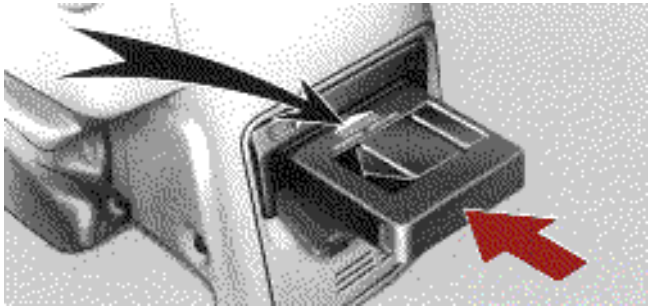

4. Insert the magazine into the player as indicated by the arrow head on the magazine and close the cover.

When the magazine is set completely, the system will be in a “Load” cycle for approximately 20 seconds while the system searches for discs in the magazine. Upon completion of this cycle, the CD unit will be ready to play. If the “CD” button is pushed during the “Load” cycle, “LOAD” appears on the display until the system has completed the load cycle, after which the system will begin normal play.

CAUTION

To reduce the chance of injury in case of an accident or sudden stop, always keep the cover closed while driving.

(b) Playing a compact disc

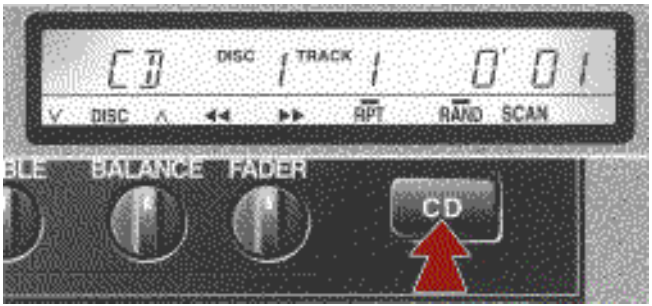

Push the “CD” button if the magazine is already loaded in the player.

“CD” appears on the display.

The discs set in the magazine are played continuously, starting with disc number 1. The disc number of the disc currently being played, the track number and the time from the beginning of the program appear on the display.

When play of one disc ends, the first track of the following disc starts. When play of the final disc ends, play of the first disc starts again.

The player will skip any empty disc trays.

(c) Selecting a desired disc

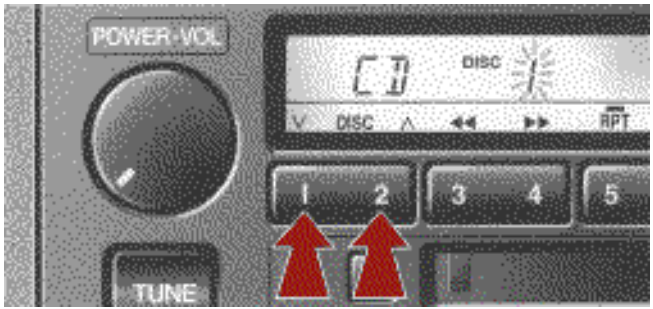

Push the “DISC” button to select the disc number.

Push the button and hold it until the desired disc number appears on the display. When you release the button, the player will start playing the selected disc from the first track.

(d) Searching for a desired track

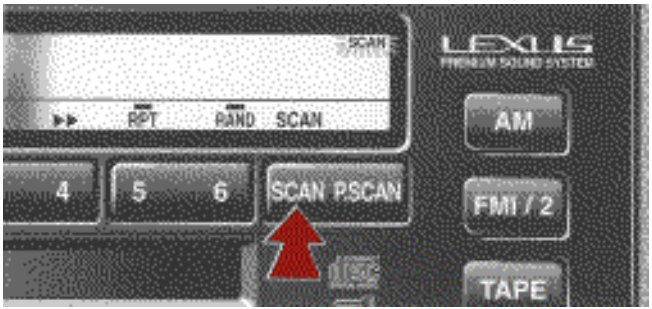

Push the “SCAN” button briefly.

“SCAN” will appear on the display. The compact disc player will play the next track for 10 seconds, then scan again. To select a track, push the “SCAN” button a second time. If the player reaches the end of the disc, it will continue scanning at track 1.

After all the tracks are scanned in one pass, normal play resumes.

(e) Searching for a desired disc

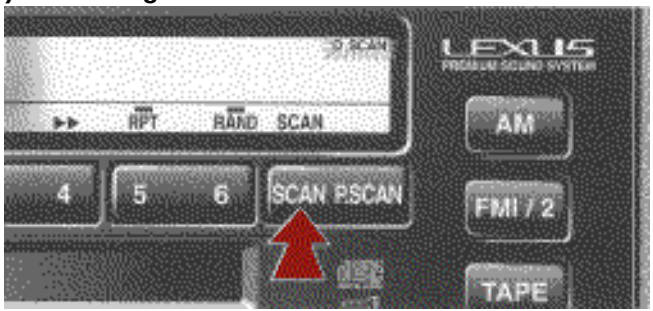

Push the “SCAN” button until you hear a beep.

With “D.SCAN” on the display, the program at the beginning of each disc will be played for 10 seconds. To continue listening to the program of your choice, push the “SCAN” button a second time.

After all the discs in the magazine are scanned in one pass, the scan function is cancelled.

(f) Selecting a desired track

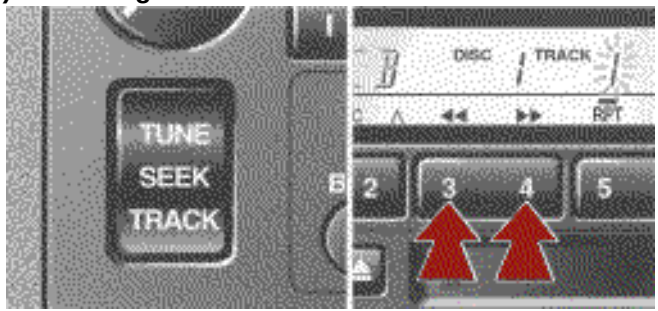

“TRACK” button: Use for direct access to a desired track.

Push either side of the “TRACK” button and hold it until the desired track number appears on the display. As you release the button, the player will start playing the selected track from the beginning.

“Fast forward” button.

Push the “▶▶” button and hold it to fast forward the disc. When you release the button, the compact disc player will resume playing from that position.

“Reverse” button.

Push the “◀◀” button and hold it to reverse the disc. When you release the button, the compact disc player will resume playing.

(g) Other compact disc player functions

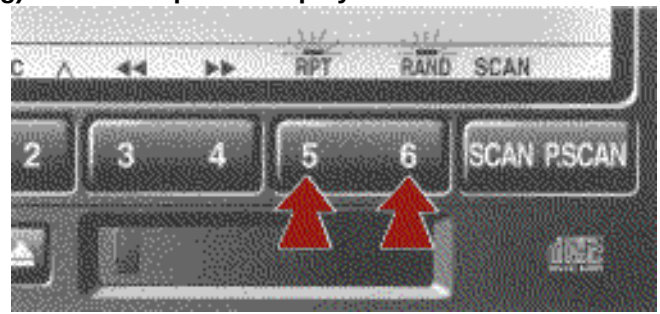

“RPT button”: Use it for automatic repeat of the track you are currently listening to.

Push the button while the track is playing. When the track is finished, the player will automatically go back to the beginning of the track and play the track again. To cancel it, push the button once again.

“RAND” button: Use it for automatic track selection and play by the system.

When the button is pushed, the system selects a track in the discs which are set and plays it. To cancel it, push the button once again.

When a track is skipped or the system is inoperative, push the button to reset.

(h) If the player malfunctions

If “WAIT” appears on the display, audio signals of the disc cannot be read or the system has trouble. Push the “CD” button once again.

If the player does not operate, check that the disc surface is not soiled or damaged. If the disc is O.K., the following two causes are possible.

- Condensation may have occurred on the internal mechanism of the automatic changer. Open the cover to let the air circulate.
- The temperature of the player’s internal mechanism is raised because of high external temperature. Remove the magazine from the player to cool it.

If the player still does not operate, take it to your Lexus dealer.

Car audio system operating hints

NOTICE

To ensure the correct audio system operation:

- ***Be careful not to spill beverages over the audio system or center console in which the audio speaker or the optional CD changer is installed.***
- ***Do not put anything other than a cassette tape or CD magazine into the cassette tape slot or CD changer.***

Radio reception

Usually, the problem with radio reception does not mean there is a problem with your radio – it is just the normal result of conditions outside the vehicle.

For example, nearby buildings and terrain can interfere with FM reception. Power lines or telephone wires can interfere with AM signals. And of course, radio signals have a limited range, and the further you are from a station, the weaker its signal will be. In addition, reception conditions change constantly as your vehicle moves.

Here are some common reception problems that probably do not indicate a problem with your radio:

FM

Fading and drifting stations – Generally, the effective range of FM is about 40 km (25 miles). Once outside this range, you may notice fading and drifting, which increase with the distance from the radio transmitter. They are often accompanied by distortion.

Multi–path – FM signals are reflective, making it possible for two signals to reach your antenna at the same time. If this happens, the signals will cancel each other out, causing a momentary flutter or loss of reception.

Static and fluttering – These occur when signals are blocked by buildings, trees, or other large objects. Increasing the bass level may reduce static and fluttering.

Station swapping – If the FM signal you are listening to is interrupted or weakened, and there is another strong station nearby on the FM band, your radio may tune in the second station until the original signal can be picked up again.

AM

Fading – AM broadcasts are reflected by the upper atmosphere – especially at night. These reflected signals can interfere with those received directly from the radio station, causing the radio station to sound alternately strong and weak.

Station interference – When a reflected signal and a signal received directly from a radio station are very nearly the same frequency, they can interfere with each other, making it difficult to hear the broadcast.

Static – AM is easily affected by external sources of electrical noise, such as high tension power lines, lightening, or electrical motors. This results in static.

Caring for your cassette player and tapes

For high performance from your cassette player and tapes:

Clean the tape head and other parts regularly.

- A dirty tape head or tape path can decrease sound quality and tangle your cassette tapes. The easiest way to clean them is by using a cleaning tape. (A wet type is recommended.)

Use high–quality cassettes:

- Low–quality cassette tapes can cause many problems, including poor sound, inconsistent playing speed, and constant auto–reversing. They can also get stuck or tangled in the cassette player.
- Do not use a cassette if it has been damaged or tangled or if its label is peeling off.
- Do not leave a cassette in the player if you are not listening to it, especially if it is hot outside.
- Store cassettes in their cases and out of direct sunlight.
- Avoid using cassettes with a total playing time longer than 100 minutes (50 minutes per side). The tape used in these cassette is thin and could get stuck or tangled in the cassette player.

Caring for your compact disc player and discs

- Use only compact discs labeled as shown. The player is intended for use with 12 cm (4.7 in.) discs only.
- Extremely high temperature can keep your compact disc player from working. On hot days, use air conditioning to cool the vehicle interior before you listen to a disc.
- Bumpy roads or other vibrations may make your compact disc player skip.
- If moisture gets into your compact disc player, you may not hear any sound even though your compact disc player appears to be working. Remove the magazine from the player and wait until it dries.

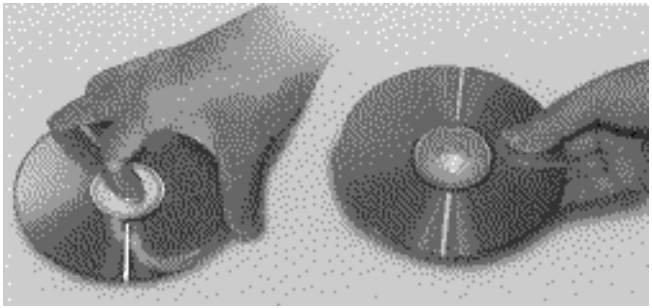

▶ ***Correct*** ▶ ***Wrong***

- Handle compact discs carefully, especially when you set them into the magazine. Hold them on the edge and do not bend them. Avoid getting fingerprints on them, particularly on the shiny side.
- Dirt, scrapes, warping, pin holes, or other disc damage could cause the player to skip or to repeat a section of a track. (To see a pin hole, hold the disc up to the light.)

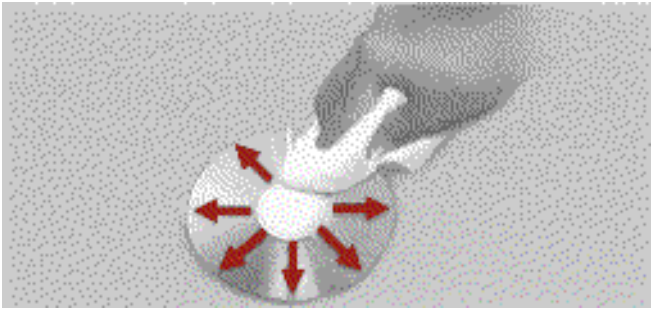

To clean a compact disc: Wipe it with a soft, lint–free cloth that has been dampened with water. Wipe in a straight line from the center to the edge of the disc (not in a circle). Do not use a conventional record cleaner or anti–static device.

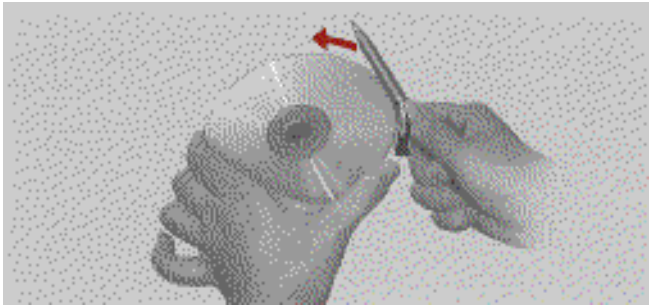

A new disc may have rough edges on its inner and outer perimeter. Remove the rough edges by pressing the side of a ball–point pen or pencil against the inner and outer edges of the disc as shown.

If you continue to play a disc with rough edges, flakes will fall on to the signal side of the disc and cause sound skipping or other problems.

CAUTION

Compact disc players use invisible laser beams which could cause hazardous radiation exposure if directed outside the unit. Be sure to operate the player correctly as instructed.

Anti–theft system

To deter theft of your radio, the system is designed so that the radio unit becomes inoperable if it is stolen from the vehicle.

The system is not preset at the factory. You must input a three–digit identification number decided by you.

NOTICE

If you pushed the wrong buttons on the anti–theft system, the following messages will appear on the display:

- ***"ERR" – You have pushed wrong buttons.***
- ***"1–9" – Indicates the number of errors you have made. You may make up to nine errors, but no more!***
- ***"HELP" – The number of errors you can make was exceeded. The audio system is completely inoperable. Contact your Lexus dealer.***

(a) Setting the anti–theft system

1. Make sure the radio unit is turned off with the ignition switch in "ACC".

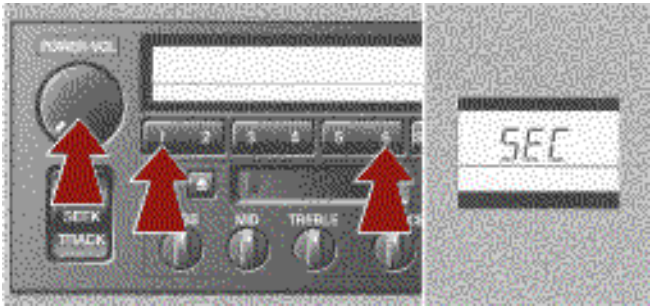

2. While holding the "1" and "6" buttons in, push the "POWER.VOL" knob in until "SEC" appears on the display.

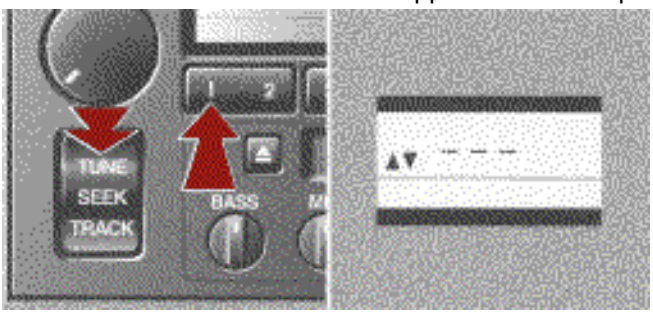

3. Push the "1" button while pushing the upper side of the "TUNE SEEK" button. "——" and the tape operation indicator (▼▲) will appear on the display.

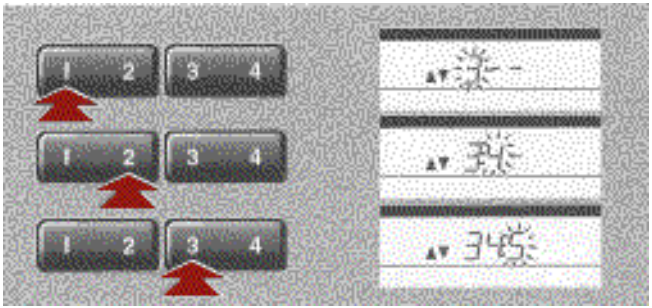

4. Input your identification number by pushing buttons “1”, “2” and “3” the desired number of times. Use the “1” button for the first digit, the “2” button for the second digit and the “3” button for the last digit. For example, if your number is 345, push the “1” button four times, the “2” button five times and “3” button six times. (pushing once will display “0”). If the display returns to “——” while inputting, try again.

We recommend that your identification number be associated with something easy to remember. In case you are unsure of the number, write it in a notebook you normally carry. Do not leave it in your vehicle.

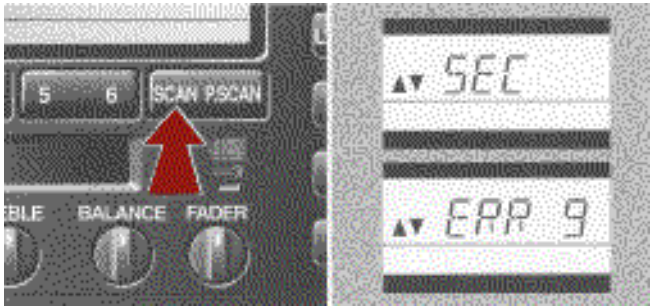

5. With your identification number appearing on the display, push the “SCAN” button and hold it in until “SEC” appears on the display. “SEC” will go off to indicate the system is set. If invalid buttons have been used, “ERR” will appear on the display before “SEC” appears. Try again from step 3.

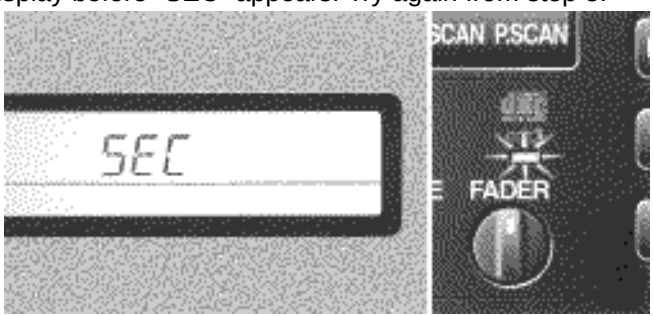

Once the system is set, the indicator light turns on and off with the ignition switch in “LOCK”, and “SEC” will appear each time the ignition switch is turned from “LOCK” to “ACC”.

To change the identification number for some reason, cancel the system (See “(b) Cancelling the anti–theft system”.) and set it again with a new number.

The system will be activated if the electrical power source is disconnected from the radio unit. When the system is activated, the audio system cannot be turned on even after the power supply resumes; “SEC” will appear on the display. If this happens, such as when the battery is discharged, see “(c) If the anti–theft system is activated”.

(b) Cancelling the anti–theft system

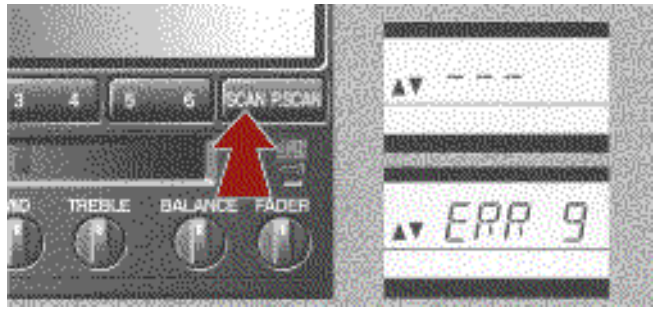

1. Follow step 1 to 4 described in “(a) Setting the anti–theft system”.
2. With your identification number appearing on the display, push the “SCAN” button and hold it in until “——” appears on the display. “——” will go off to indicate the system is cancelled. If invalid buttons have been used, “ERR” will appear on the display and “SEC” appears. Try again from step 3 in “(a) Setting the anti–theft system”.

The number displayed with “ERR” indicates how many errors you have made. You may make up to nine errors, but no more!

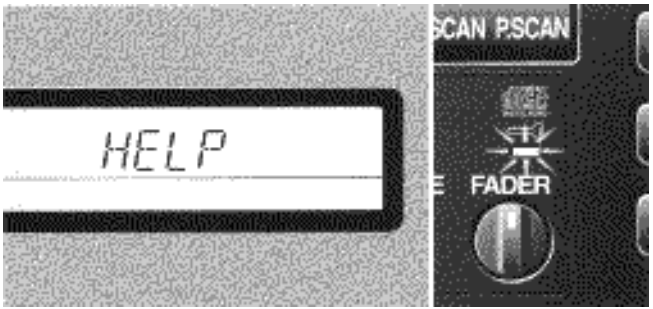

NOTICE

A tenth error will activate the anti–theft system and "HELP" will appear on the display. The audio system will be completely inoperable. At this time, the indicator light also comes on. If this occurs, contact your Lexus dealer.

At the time of resale of your vehicle, cancel the system for the new owner.

(c) If the anti–theft system is activated

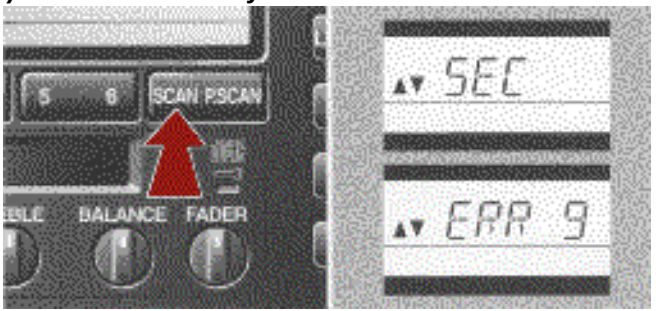

The audio system made inoperable by the activated anti–theft system will be operable if you give it the correct identification number.

1. Follow step 3 and 4 described in "(a) Setting the anti–theft system".
2. With your identification number appearing on the display, push the "SCAN" button and hold it in until "SEC" appears on the display. "SEC" will go off to indicate that the system is reset and the audio system is operable. If invalid buttons have been used, "ERR" will appear on the display before "SEC" appears. Try again from the beginning.

See "(b) Cancelling the anti–theft system" for notes on the number displayed with "ERR".

The number displayed with “ERR” indicates how many errors you have made. You may make up to nine errors, but no more!

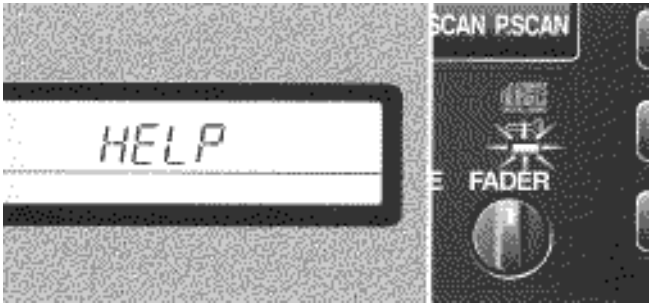

NOTICE

A tenth error will activate the anti–theft system and “HELP” will appear on the display. The audio system will be completely inoperable. At this time, the indicator light also comes on. If this occurs, contact your Lexus dealer.

STARTING AND DRIVING

Starting and driving

Three–way catalytic converter ---------- 126
Engine exhaust caution ---------- 127
Before starting the engine ---------- 128
Ignition switch with steering lock ---------- 128
Parking brake ---------- 129
How to start the engine ---------- 130
Automatic transmission ---------- 131
Four–wheel drive system ---------- 138
Front and rear differential lock system ---------- 139
Cruise control ---------- 141
Brake system ---------- 144
Brake pad wear limit indicators ---------- 146
Types of tires ---------- 147

THREE–WAY CATALYTIC CONVERTER

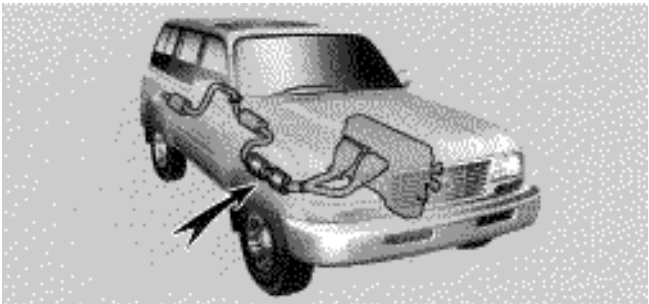

Three–way catalytic converters are emission control devices installed in the exhaust system.

It looks somewhat like a muffler, but its purpose is to reduce pollutants in the exhaust gas.

CAUTION

- **Keep people and combustible materials away from the exhaust pipe while the engine is running. The exhaust gas if very hot.**
- **Do not drive, idle or park your vehicle over anything that might burn easily such as grass, leaves, paper or rags.**

NOTICE

A large amount of unburned gases flowing into the three–way catalytic converter may cause it to overheat and create a fire hazard. To prevent this and other damage, observe the following precautions:

- ***Use only unleaded gasoline.***
- ***Do not drive with an extremely low fuel level; running out of fuel could cause the engine to misfire, creating an excessive load on the three–way catalytic converter.***
- ***Do not allow the engine to run at idle speed for more than 20 minutes.***
- ***Avoid racing the engine.***
- ***Do not push–start or pull–start your vehicle.***
- ***Do not turn off the ignition while the vehicle is moving.***
- ***Keep your engine in good running order. Malfunctions in the engine electrical system, electronic ignition system/distributor ignition system or fuel system could cause an extremely high three–way catalytic converter temperature.***
- ***If the engine becomes difficult to start or stalls frequently, take your vehicle in for a check–up as soon as possible. Remember, your Lexus dealer knows your vehicle and its three–way catalytic converter system best.***

- *To ensure that the three–way catalytic converter and the entire emission control system operate properly, your vehicle must receive the periodic inspections required by the Lexus Maintenance Schedule. For scheduled maintenance information, refer to the separate "Owner's Manual Supplement/Maintenance Schedule".*

ENGINE EXHAUST CAUTION

CAUTION

- **Avoid inhaling the engine exhaust. It contains carbon monoxide, which is a colorless and odorless gas. It can cause unconsciousness or even death.**
- **Make sure the exhaust system has no holes or loose connections. The system should be checked from time to time. If you hit something, or notice a change in the sound of the exhaust, have the system checked immediately.**
- **Do not run the engine in a garage or enclosed area except for the time needed to drive the vehicle in or out. The exhaust gases cannot escape, making this a particularly dangerous situation.**
- **Do not remain for a long time in a parked vehicle with the engine running. If it is unavoidable, however, do so only in an unconfined area and adjust the heating or cooling system to force outside air into the vehicle.**
- **Keep the back door closed while driving. An open or unsealed back door may cause exhaust gases to be drawn into the vehicle. If you must drive with the back door open to accommodate a large object, close the windows, open all the dashboard vents and have the heating or cooling system deliver fresh air into the vehicle by turning the fan to high speed with the air intake control button in the OUTSIDE AIR mode.**
- **To allow proper operation of your vehicle's ventilation system, keep the inlet grilles in front of the windshield clear of snow, leaves, or other obstructions.**
- **If you smell exhaust fumes in the vehicle, drive with the windows open and the trunk lid closed. Have the cause immediately located and corrected.**

BEFORE STARTING THE ENGINE

1. Check the area around the vehicle before entering it.
2. Adjust seat position, seatback angle, head restraint height and steering wheel angle.
3. Adjust inside and outside rear view mirrors.
4. Lock all doors.
5. Fasten seat belts.

Remember to check that the service reminder indicators function when turning the key to “ON”, and check the fuel gauge to see that you have sufficient fuel.

IGNITION SWITCH WITH STEERING LOCK

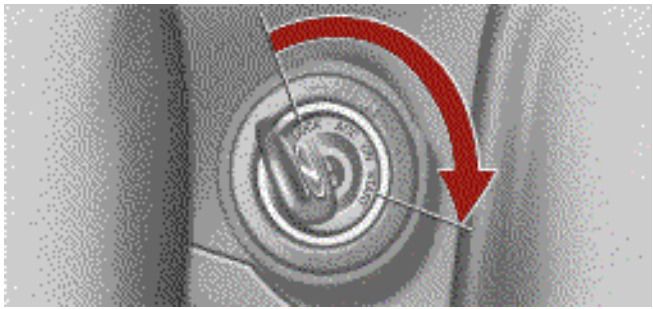

“START” – Starter motor on. The key will return to the “ON” position when released.

For starting tips, see page 130.

“ON” – Engine on and all accessories on.

This is the normal driving position.

NOTICE

Do not leave the key in the “ON” position if the engine is not running. The battery will discharge and the electronic ignition system/distributor ignition system could be damaged.

“ACC” – Accessories such as the radio operate, but the engine is off.

If you leave the key in the “ACC” or “LOCK” position and open the driver’s door, a buzzer will remind you to remove the key.

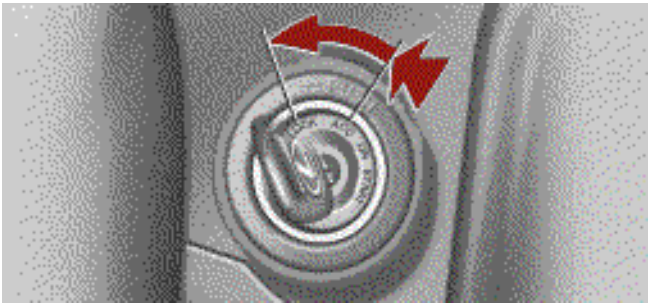

“LOCK” – Engine is off and the steering wheel is locked. The ignition key can be removed only at this position.

To turn the key from “ACC” to the “LOCK” position, you must put the transmission selector lever in the “P” position.

When starting the engine, the key may seem stuck at the “LOCK” position. To free it, first be sure the key is pushed all the way in, and then rock the steering wheel slightly while turning the key gently.

If, in an emergency, you must turn the engine off while the vehicle is moving, turn the key only to “ACC”.

PARKING BRAKE

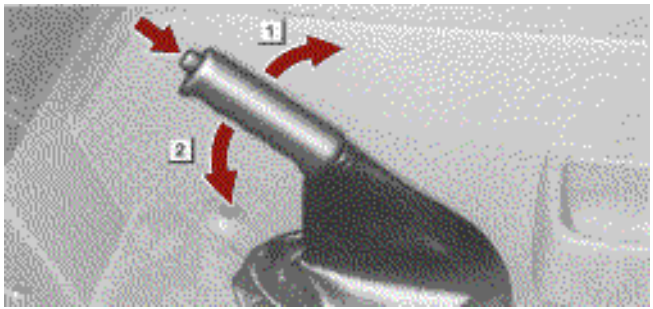

1 **To set: Pull up the lever.**

2 **To release: Pull up the lever slightly, press the thumb button, then lower the lever.**

Before leaving your vehicle, firmly apply the parking brake. For better holding power, first depress the brake pedal and hold it while setting the parking brake.

CAUTION

Before driving, make sure the parking brake is fully released and that the parking brake reminder light is off.

HOW TO START THE ENGINE

Before cranking

1. Apply the parking brake firmly.
2. Turn off unnecessary lights and accessories.
3. Put the selector lever in “P”. If you need to restart the engine while the vehicle is moving, put the selector lever in “N”. A starter safety device will prevent the starter from operating if the selector lever is in any drive position.
4. Depress the brake pedal and hold it to the floor until you are ready to drive off.

Starting the engine

Before starting the engine, be sure to follow the instructions in “Before cranking”.

Normal starting procedure

The multiport fuel injection system/sequential multiport fuel injection system in your engine automatically controls the proper air–fuel mixture for starting. You can start a cold or hot engine as follows:

1. With your foot off the accelerator pedal, crank the engine by turning the key to “START”. Release it when the engine starts.
2. After the engine runs for about 10 seconds, you are ready to drive.

If the weather is below freezing, let the engine warm up for a few minutes before driving. Do not leave the vehicle while the engine is warming up.

If the engine stalls...

Simply restart it, using the correct procedure given in normal starting.

If the engine will not start

See “If your vehicle will not start” on page 164.

NOTICE

- ***Do not crank for more than 15 seconds at a time. This may overheat the starter and wiring systems.***
- ***Do not race a cold engine.***
- ***If the engine becomes difficult to start or stalls frequently, have the engine checked immediately.***

AUTOMATIC TRANSMISSION

Your automatic transmission has a shift lock system to minimize the possibility of incorrect operation. This means you can only shift out of "P" position when the brake pedal is depressed with the ignition switch in "ON" position. (★)

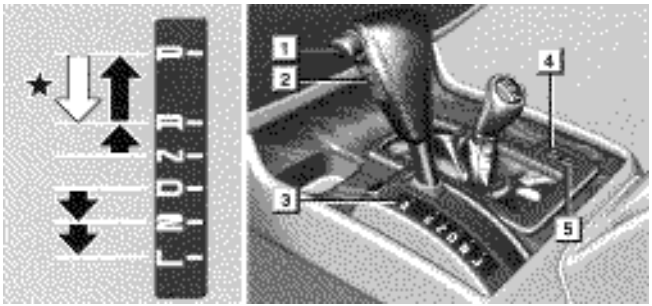

1 **Lock release button**

⇩ With the brake pedal depressed, shift while holding the lock release button in. (The ignition switch must be in the "ON" position)

⬇⬆ Shift while holding the lock release button in.

2 **Overdrive switch**

For selecting either a three–speed or four–speed transmission.

When the cruise control is being used even if you downshift the transmission, engine braking will not be applied because the cruise control is not cancelled. For ways to decrease the vehicle speed, see "Cruise control" on page 141.

3 **Shift position indicator**

The shift position is also displayed on the instrument cluster.

P: Parking, engine starting and key removal position

R: Reverse position

N: Neutral position

D: Normal driving position (Shifting into overdrive possible)

2: Position for engine braking

L: Position for stronger engine braking than that in "2" position

4 **Driving pattern selector switch**

For selecting a driving pattern suited to existing driving condition.

5 **Second start mode selector switch**

For selecting either second start mode or normal driving mode.

Correct use of the automatic transmission is explained in the following parts.

(a) Normal driving
(b) Using engine braking
(c) Using the “2” and “L” positions
(d) Backing up
(e) Parking
(f) Good driving practice
(g) If you cannot shift the selector lever
(h) If the “O/D OFF” indicator light flashes
(i) Driving in “2nd STRT” (second start) mode

(a) Normal driving

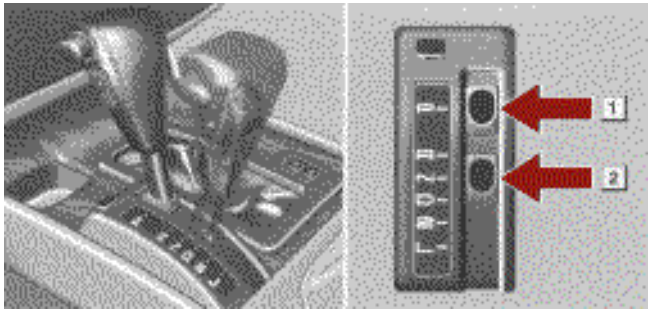

▶ 1 ***“P” (Park) position*** 2 ***“N” (Neutral) position***

1. Start the engine as instructed in “How to start the engine” on page 130.

The transmission must be in “P” or “N”. The engine will not start in any drive position even if the ignition key is turned to “START”.

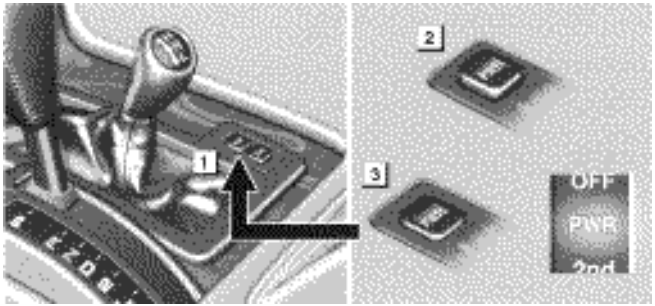

▶ 1 ***Driving pattern selector switch***
2 ***Normal position*** 3 ***Power position***

2. Set the driving pattern selector switch to the NORMAL position.

Your transmission has a driving pattern selector switch which allows you to select either “NORM” or “PWR” to suit your driving condition. For ordinary driving, Lexus recommends that you use the NORMAL position to improve fuel economy.

3. For more powerful acceleration and sporty driving, use the POWER position.

In the POWER position, the “ECT PWR” light in the instrument cluster is on and the transmission is shifted up at higher vehicle speeds and shifted down more responsively than in the NORMAL position.

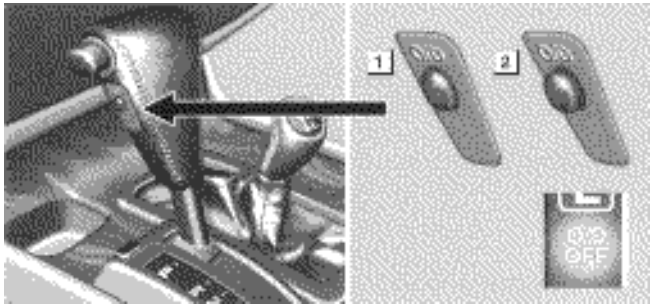

▶ 1 ***ON*** 2 ***OFF***

4. Set the overdrive switch to the ON position.

Always set the overdrive switch to the ON position to improve fuel economy and quiet driving. (See “(b) Using engine braking” and “(f) Good driving practice” for exceptions.)

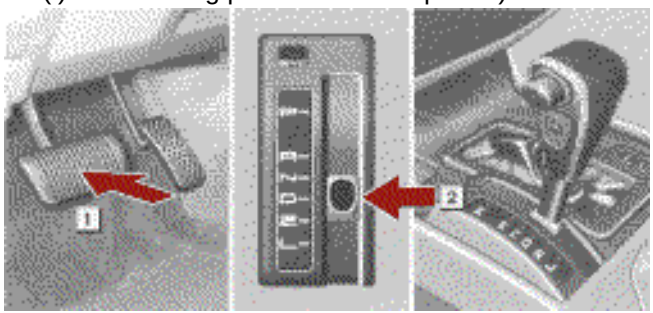

▶ 1 ***“D” (Drive) position*** 2 ***Brake pedal***

5. With your foot holding down the brake pedal, shift the selector lever to “D”.

Always use the “D” position to improve fuel economy and quiet driving. Only in this position, shifting into the overdrive gear is possible. However, while the engine coolant temperature is low, the transmission will not shift into the overdrive gear even in the “D” position. (See “(b) Using engine braking” and “(f) Good driving practice” for exceptions.)

CAUTION

Never put your foot on the accelerator pedal while shifting.

6. Release the parking brake and brake pedal. Depress the accelerator pedal slowly for smooth starting.

In normal cruising, the vehicle will start in the first gear and automatically shift to the most suitable gear for the running conditions.

In “D” position, the automatic transmission system will select the most suitable gear for the running conditions such as hill climbing, hard towing, etc.

If you need to accelerate rapidly while driving, depress the accelerator pedal to the full throttle position. This provides more acceleration by automatically downshifting the transmission to the next lower gear or beyond, depending on the vehicle speed.

If engine braking is needed, such as in descending a long hill, see “(b) Using engine braking”.

(b) Using engine braking

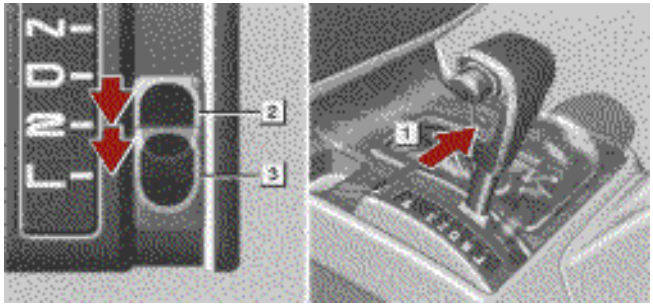

To use the braking power of the engine, downshift the transmission in the way described below.

1. Turn off the overdrive switch. The “O/D OFF“ indicator light will come on and the transmission will downshift to the third gear.
2. Shift into the “2” position. The transmission will downshift to the second gear when the vehicle speed is or becomes lower than 116 km/h (72 mph) and more powerful engine braking will be obtained.
3. Shift into the “L” position. The transmission will downshift to the first gear when the vehicle speed is or becomes lower than 56 km/h (35 mph) and maximum engine braking will be applied.

When the cruise control is being used, even if you downshift the transmission, engine braking will not be applied because the cruise control is not cancelled. For ways to decrease the vehicle speed, see “Cruise control” on page 141.

CAUTION

Be careful when downshifting on a slippery surface. The abrupt change in engine speed could cause the vehicle to spin or skid.

(c) Using the “2” and “L” positions

The “2” and “L” positions are used for strong engine braking as described previously.

With the selector lever in “2” or “L”, you can start the vehicle in motion as with the lever in “D”.

With the selector lever in “2”, the vehicle will start in the first gear and automatically shift to the second gear.

With the selector lever in “L”, the transmission is engaged in the first gear.

NOTICE

- ***Be careful not to overrev the engine. Watch the tachometer to keep engine rpm from going into the red zone. The approximate maximum allowable speed for each position is given below for your reference:***

Transmission	Transfer “L”	Transfer “H”
“2”	44 km/h (27 mph)	109 km/h (67 mph)
“L”	22 km/h (13 mph)	56 km/h (34 mph)

- ***Do not continue hill climbing or hard towing for a long time in the “2” or “L” position. This may cause severe automatic transmission damage from overheating. To prevent such damage, “D” position should be used in hill climbing or hard towing.***

(d) Backing up

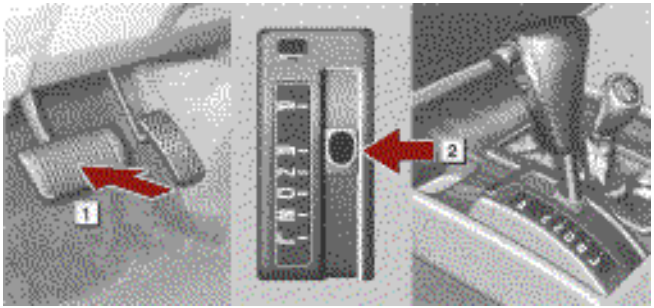

▶ 1 ***"R" (Reverse) position*** 2 ***Brake pedal***

1. Bring the vehicle to a complete stop.
2. With the brake pedal held down with your foot, shift the selector lever to the "R" position.

NOTICE
Never shift into reverse while the vehicle is moving.

(e) Parking

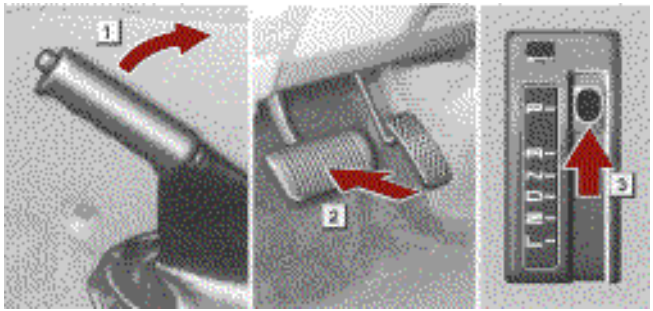

▶ 1 ***Parking brake lever*** 2 ***Brake pedal***
3 ***"P" (Park) position***

1. Bring the vehicle to a complete stop.
2. Apply the parking brake lever fully.
3. With the brake pedal held down with your foot, shift the selector lever to the "P" position.

⚠ **CAUTION**
While the vehicle is moving, never attempt to move the selector lever into "P" under any circumstances. Serious mechanical damage and loss of vehicle control may result.

(f) Good driving practice

- If the transmission repeatedly upshifts and downshifts between the third and overdrive gears when climbing a gentle slope, turn off the overdrive switch. Be sure to turn the switch on immediately after climbing the slope.
- When towing a trailer, in order to maintain efficient engine braking and electrical charging performance, do not use overdrive.

CAUTION

Always keep your foot on the brake pedal while stopped with the engine running. This prevents the vehicle from creeping.

NOTICE

Do not hold the vehicle on an upgrade with the accelerator pedal. This can cause the transmission to overheat. Always use the brake pedal or parking brake.

(g) If you cannot shift the selector lever

If you cannot shift the selector lever even though the brake pedal is depressed, use the shift lock override button. For instructions, see “If you cannot shift automatic transmission selector lever” on page 180.

(h) If the “O/D OFF” indicator light flashes

Contact your Lexus dealer as soon as possible. There may be trouble in the transmission system.

(i) Driving in “2nd STRT” (second start) mode

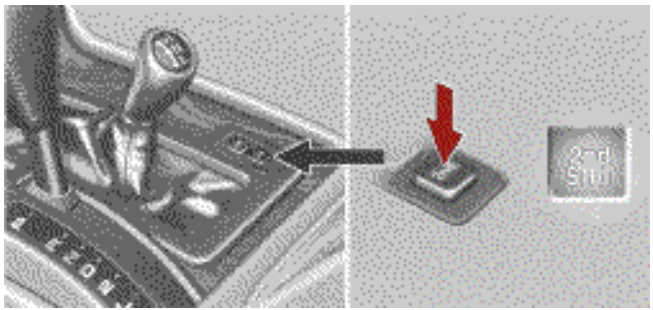

In the “2nd STRT” (second start) mode, the transmission system shifts up from second gear. Use this mode when starting your vehicle in sand, mud, ice or snow.

To set the “2nd STRT” mode, push the “2nd” switch. In the “2nd STRT” mode, the “2nd STRT” indicator light comes on. To cancel the “2nd STRT” mode, push the “2nd” switch again.

The “PWR” mode is automatically cancelled when you push the “2nd” switch.

FOUR–WHEEL DRIVE SYSTEM

(a) Four–wheel drive control

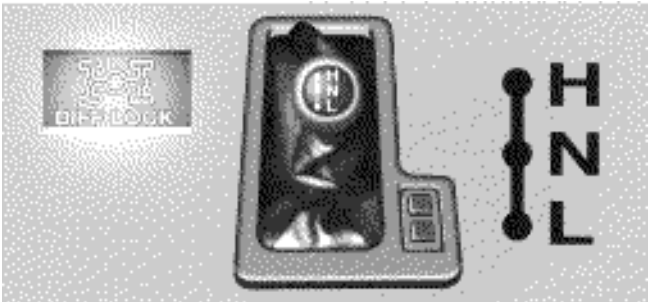

Use the four–wheel drive control lever to select the following transfer modes.

“H” (high speed position, center differential unlocked): Lever at “H”

Use this for normal driving on all types of roads, from dry hard–surfaced roads to wet, icy or snow–covered roads. This position gives greater economy, quietest ride, least wear and better vehicle control.

“N” (neutral position): Lever at “N”

No power is delivered to the wheels. The vehicle must be stopped.

“L” (low speed position, center differential locked): Lever at “L”

Use this for maximum power and traction, when you experience a loss of power, such as wheel slipping or hard pulling, in the “H” position.

The indicator light tells when the center differential lock is engaged. Note that the differential is not still locked as long as the indicator light remains off.

If the indicator light does not come on when the lever is in the “L” position, have your vehicle checked by your Lexus dealer as soon as possible.

See “(b) Shifting procedure (with anti–lock brake system)” for further instructions.

In this position, the anti–lock brake system does not operate. See “Brake system” on page 144.

(b) Shifting procedure

To shift between “H” and “L”, stop the vehicle, put the transmission into “P” or “N” and move the four–wheel drive control lever.

CAUTION

Never move the four–wheel drive control lever if wheels are slipping. Stop the slipping or spinning before shifting.

FRONT AND REAR DIFFERENTIAL LOCK SYSTEM

The front and rear differential lock system is provided for use only when wheel spinning occurs in a ditch or on a slippery or ragged surface.

This differential lock system is effective in case one or either right or left pair of the wheels is spinning.

First shift the four–wheel drive control into “L” with the center differential locked to see if you can move forward. If this does not work, use the front and rear differential lock system also.

CAUTION

Do not use the front and rear differential locks in the conditions other than above. Large steering effort and careful cornering control will be required. Especially use of the front differential lock in addition to the rear will result in extremely difficult steering control and may cause the vehicle to spin suddenly during acceleration or engine braking.

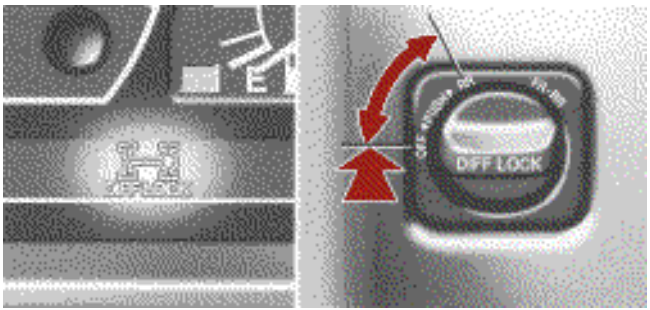

▶ ***Lock rear differential***

To lock the rear differential, push and turn the switch clockwise until it clicks. If this does not help, turn the switch fully clockwise to lock the front differential in addition.

Be sure to stop the wheels before locking the differentials.

For easy locking, turn the lock switch and gently depress the accelerator pedal.

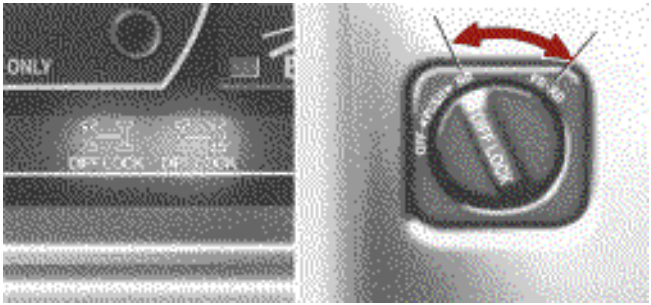

▶ ***Lock front differential***

The indicator light will blink when the switch is turned on. Wait a few seconds for the system to complete operation. After the differential is locked, the light will stop blinking and remain on.

CAUTION

- **Do not lock the differentials until the wheels have stopped spinning. Otherwise, the vehicle may move in an unexpected direction when the differential locks are engaged, resulting in an accident. This may also lead to possible damage to differential lock component parts.**
- **Do not drive over 8 km/h (5 mph) when the differentials are locked.**

To unlock the differentials, turn the switch fully counterclockwise.

Unlock the differentials as soon as the vehicle moves out.

For easy unlocking, slightly turn the steering wheel in either direction while the vehicle is moving.

When each of the differential locks is disengaged, the indicator light will go out.

The differentials will also unlock if you unlock the center differential. Never forget to turn off the switch after using this feature.

To check the indicator bulb, turn the ignition key to the “ON” position, but do not start the engine.

CAUTION

Do not keep driving with the differential lock switch on.

CRUISE CONTROL

The cruise control allows you to cruise the vehicle at a desired speed over 40 km/h (25 mph) with your foot off the accelerator pedal.

Your cruising speed can be maintained although a slight speed change may occur when driving up or down a gradient, within the limits of engine performance. On steeper hills, a great speed change will occur so it is better to drive without the cruise control.

When the cruise control is on, the driving pattern of the automatic transmission is fixed in the normal position, regardless of the position of the selector switch.

CAUTION

- **To help maintain maximum control of your vehicle, do not use the cruise control when driving in heavy or varying traffic, or on slippery (rainy, icy or snow–covered) or winding roads.**
- **Avoid vehicle speed increases when driving downhill. If the vehicle speed is too fast in relation to the cruise control set speed, cancel the cruise control then downshift the transmission to use engine braking to slow down.**

Turning on the system

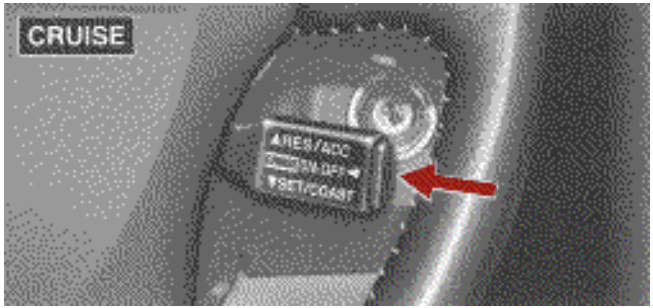

To operate the cruise control, push the main switch. This turns the system on. The indicator light in the instrument cluster shows that you can now set your desired cruising speed. Another push on the switch will turn the system completely off.

When the ignition key is turned off, the main switch is also automatically turned off. To use the cruise control again, push the main switch again to turn it on.

CAUTION

To avoid accidental cruise control engagement, keep the main switch off when not using the cruise control.

Setting at a desired speed

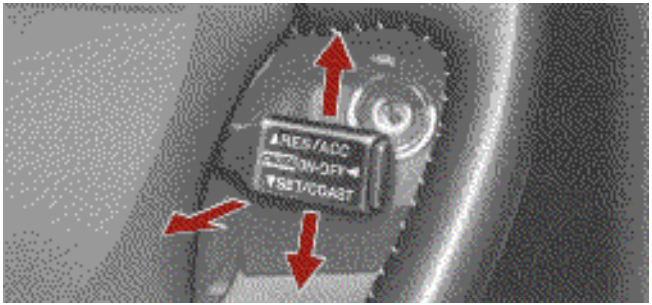

The transmission must be in “D” before you set the cruise control speed.

Bring your vehicle to the desired speed, push the lever down in the “SET/COAST” direction and release it. This sets the vehicle at that speed. If the speed is not satisfactory, tap the lever up for a faster speed, or tap it down for a slower speed. Each tap changes the set speed by 1.6 km/h (1.0 mph). You can now take your foot off the accelerator pedal.

Cancelling the preset speed

You can cancel the preset speed by either of the following:

a. Pulling the control lever in the “CANCEL” direction.

b. Depressing the brake pedal.

If the vehicle speed falls below about 40 km/h (25 mph), the preset speed will be automatically cancelled.

If the vehicle speed drops 16 km/h (10 mph) below the preset speed, the preset speed will also automatically be cancelled.

If the preset speed automatically cancels out for other than these reasons, have your vehicle checked by your Lexus dealer at the earliest opportunity.

Resetting to a faster speed

Pressing the control lever upward in the “RES/ACC” direction and hold it. Release the lever when the desired speed is attained. While the lever is held upward, the vehicle will gradually gain speed.

When the difference between the actual vehicle speed and the set speed is less than 5 km/h (3 mph), the set speed can be increased 1.6 km/h (1 mph) each time by pressing the control lever upward in the “RES/ACC” direction quickly within 0.6 seconds.

However, a quicker way to reset is to accelerate the vehicle and then press the control lever downward in the “SET/COAST” direction.

Resetting to a slower speed

Press the control lever downward in the “SET/COAST” direction and hold it. Release the lever when the desired speed is attained. While the lever is held downward, the vehicle speed will gradually decrease.

When the difference between the actual vehicle speed and the set speed is less than 5 km/h (3 mph), the set speed can be lowered 1.6 km/h (1 mph) each time by pressing the control lever downward in the “SET/COAST” direction quickly within 0.6 seconds.

However, a quicker way to reset is to depress the brake pedal and then press the control lever downward in the “SET/COAST” direction.

Even if you downshift the transmission with the cruise control on, engine braking will not be applied because the cruise control is not cancelled. To decrease the vehicle speed, reset to a slower speed with the cruise control lever or depress the brake pedal. If you use the brake pedal, cruise control is cancelled.

Resuming the preset speed

If the preset speed is cancelled by pulling the control lever or by depressing the brake pedal, pushing the lever up in the “RES/ACC” direction will restore the speed set prior to cancellation. However, once the vehicle speed falls below about 40 km/h (25 mph), the preset speed will not be resumed.

Cruise control failure warning

If the “CRUISE” indicator light in the instrument cluster flashes when using the cruise control, there is some trouble in the cruise control system.

Contact your Lexus dealer and have your Lexus inspected.

BRAKE SYSTEM

The tandem master cylinder brake system is hydraulic system with two separate sub–systems. If either sub–system should fail, the other will still work. However, the pedal will be harder to press, and your stopping distance will be longer. Also, the brake system warning light may come on.

CAUTION

Do not drive your vehicle with only a single brake system. Have your brakes fixed immediately.

Brake booster

The brake booster uses engine vacuum to power–assist the brakes. If the engine should quit while you are driving, you can bring the vehicle to a stop with normal pedal pressure. There is enough reserve vacuum for one or two stops but no more!

CAUTION

- **Do not pump the brake pedal if the engine stalls. Each push on the pedal uses up your vacuum reserve.**
- **Even if the power assist is completely lost, the brakes will still work. But you will have to push the pedal hard – much harder than normal. And your braking distance will be longer.**

Anti–lock brake system

The anti–lock brake system is designed to prevent lock–up of the wheels during sudden braking or braking on slippery road surfaces. This assists the driver in controlling the vehicle under these circumstances.

The anti–lock brake system becomes operative after the vehicle has accelerated to a speed in excess of approximately 10 km/h (6 mph). It stops operating when the vehicle decelerates to a speed below approximately 5 km/h (3 mph).

You may hear a sound in the engine compartment for a few seconds when the engine is started or just after the vehicle is started. This means that the anti–lock brake system is in the self check mode, and does not indicate a malfunction.

When the anti–lock brake system function is in action, you may feel the brake pedal pulsating and hear a noise. In this situation, to let the anti–lock brake system work for you, just hold the brake pedal down more firmly. Do not pump the brake.

The brake pedal pulsation caused by the anti–lock brake system may indicate hazardous road surface conditions. Although the anti–lock brake system assists in providing vehicle control, it is still important to drive with all due care, because the anti–lock brake system cannot overcome the laws of physics that act on your vehicle:

- Braking capability is dependent on tire friction with the road surface.

- Even though the anti–lock brake system is operating, a driver cannot maintain full control on certain slippery road surfaces, when cornering at high speeds, or in violent maneuvers.
- Avoid high speeds on wet roads. The anti–lock brake system cannot eliminate the risk of hydroplaning and loss of tire friction.

Always maintain a safe distance from the vehicle in front of you. Compared with vehicles not fitted with an anti–lock brake system, your vehicle may require a longer stopping distance in the following cases:

- Driving on rough, gravel or snow–covered roads.
- Driving with tire chains installed.
- Driving on roads where the road surface is pitted or has other differences in surface height.

CAUTION

Do not use tires other than the manufacturer's designated tires, and do not mix tires or wheels of different sizes. You may prevent the anti–lock brake system from operating at full effectiveness.

"ABS" warning light

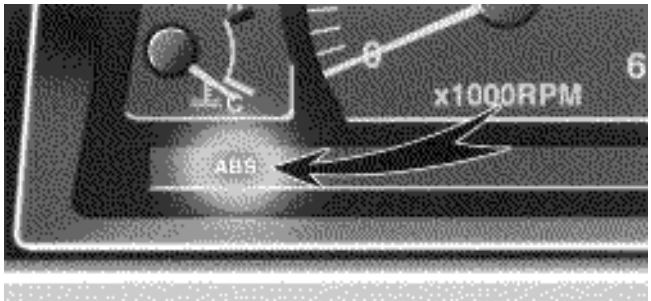

This light comes on when the ignition key is turned to the "ON" position. After about 3 seconds, the light will go off.

When the light is on with the center differential locked (four–wheel drive control lever in the "L" position), it indicates the anti–lock brake system will not operate.

If either of the following conditions occurs, this indicates a malfunction somewhere in the parts monitored by the warning light system. Contact your Lexus dealer as soon as possible to service the vehicle.

- The light does not come on as described above, or remains on.
- The light comes on while driving with the center differential unlocked.
- The light does not come on with the center differential locked.

- The system comes into operation with the center differential locked.

Even if the anti–lock brake system should fail, the brake system will still operate conventionally. Have your vehicle checked by your Lexus dealer as soon as possible.

Drum–in–disc type parking brake system

Your vehicle has a drum–in–disc type parking brake system. This type of brake system needs bedding–down of the brake shoes periodically or whenever the parking brake shoes and/or drums are replaced.

Have your Lexus dealer perform the bedding–down.

BRAKE PAD WEAR LIMIT INDICATORS

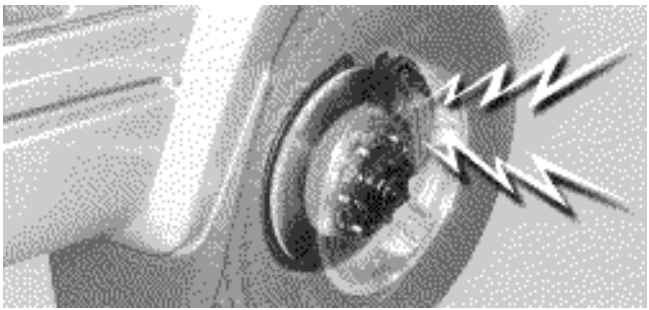

The brake pad wear limit indicators on your disc brakes give a warning noise when the brake pads are worn to the extent that replacement is required.

If you hear a squealing or scraping noise while driving, have the brake pads checked and replaced by your Lexus dealer as soon as possible. Expensive rotor damage can result if the pads are not replaced when needed.

TYPES OF TIRES

Determine what kind of tires your vehicle is originally equipped with.

1. Summer tires

Summer tires are high–speed capability tires best suited to highway driving under dry conditions.

Since summer tires do not have the same traction performance as snow tires, summer tires are inadequate for driving on snow–covered or icy roads. For driving on snow–covered or icy roads, we recommend using snow tires. If installing snow tires, be sure to replace all four tires.

2. All season tires

All season tires are designed to provide better traction in snow and to be adequate for driving in most winter conditions, as well as for use all year round.

All season tires, however, do not have adequate traction performance compared with snow tires in heavy or loose snow. Also, all season tires fall short in acceleration and handling performance compared with summer tires in highway driving.

CAUTION

Do not mix summer and all season tires on your vehicle as this can cause dangerous handling characteristics, resulting in loss of control.

STARTING AND DRIVING

Driving tips

Off–road vehicle precautions ---------- 150
Break–in period ---------- 151
Operation in foreign countries ---------- 151
Tips for driving in various conditions ---------- 151
Off–road driving precautions ---------- 152
Winter driving tips ---------- 154
Trailer towing ---------- 155
How to save fuel and make your vehicle last longer -- 161

OFF–ROAD VEHICLE PRECAUTIONS

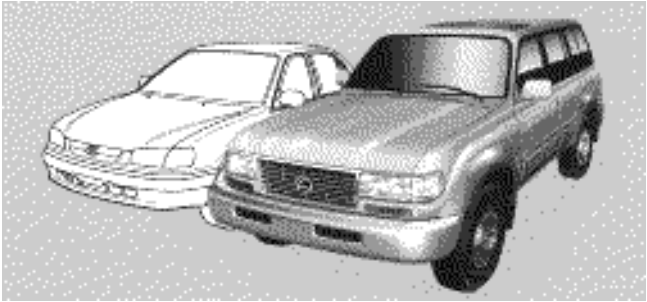

This vehicle is one of the class of vehicles which have higher ground clearance and narrower tread in relation to the height of their center of gravity to make them capable of performing in a wide variety of off–road applications. Specific design characteristics give it a higher center of gravity than ordinary cars. An advantage of the higher ground clearance is a better view of the road allowing you to anticipate problems. It is not designed for cornering at the same speeds as conventional two–wheel drive vehicles any more than low–slung sports cars are designed to perform satisfactorily under off–road conditions.

CAUTION

Always observe the following precautions to minimize the risk of serious personal injury or damage to your vehicle:

- **Avoid sharp turns or abrupt maneuvers, if at all possible. As with other vehicles of this type, failure to operate this vehicle correctly may result in loss of control or vehicle rollover.**
- **Avoid loading any items on the roof that will make the center of gravity even higher.**
- **Always slow down in gusty crosswinds. Because of its high center of gravity, your vehicle is more sensitive to side winds than an ordinary passenger car. Slowing down will allow you to have much better control.**
- **Do not drive horizontally across steep slopes. Driving straight up or straight down is preferred. Your vehicle (or any similar off–road vehicle) can tip over sideways much more easily than forward or backward.**
- **When driving off–road or in rugged terrain, do not drive at excessive speeds, jump the vehicle, or strike objects, etc. This may cause loss of control or vehicle rollover. You are also risking expensive damage to your vehicle's suspension and chassis.**

BREAK–IN PERIOD

Drive gently and avoid high speeds.

You need not follow a break–in schedule with your new Lexus. But following a few simple tips for the first 1600 km (1000 miles) can add to the future economy and long life of your vehicle:

- Do not drive over 88 km/h (55 mph).
- Avoid overrevving. Maintain engine speed between 2000 and 4000 rpm.
- Avoid full–throttle starts.
- Try to avoid hard stops during the first 300 km (200 miles).
- Do not drive for a long time at any single speed, either fast or slow.
- Do not tow a trailer during the first 800 km (500 miles).

OPERATION IN FOREIGN COUNTRIES

If you plan to drive your Lexus in another country . . .

First, comply with the vehicle registration laws.

Second, confirm the availability of the correct fuel (unleaded and minimum octane number).

TIPS FOR DRIVING IN VARIOUS CONDITIONS

- Always slow down in gusty crosswinds. This will allow you much better control.
- Drive slowly onto curbs and, if possible, at a right angle. Avoid driving onto high, sharp–edged objects and other road hazards. Failure to do so can lead to severe tire damage resulting in tire bursts.
- When parking on a hill, turn the front wheels until they touch the curb so that the vehicle will not roll. Apply the parking brake, and place the transmission in “P”. If necessary, block the wheels.
- Washing your vehicle or driving through deep water may get the brakes wet. To see whether they are wet, check that there is no traffic near you and then press the pedal lightly. If you do not feel a normal braking force, the brakes are probably wet. To dry them, drive the vehicle cautiously while lightly pressing the brake pedal with the parking brake applied. If they still do not work safely, pull to the side of the road and call a Lexus dealer for assistance.

CAUTION

- **Before driving off, make sure the parking brake is fully released and that the parking brake reminder light is off.**

- **Do not leave your vehicle unattended while the engine is running.**
- **Do not rest your foot on the brake pedal while driving. It can cause dangerous overheating, needless wear, and poor fuel economy.**
- **To drive down a long or steep hill, reduce your speed and downshift. Remember, if you ride the brakes excessively, they may overheat and not work properly. See page 134.**
- **Be careful when accelerating, upshifting, downshifting or braking on a slippery surface. The abrupt change in engine speed, such as sudden acceleration or engine braking, could cause the vehicle to spin or skid.**
- **Do not drive in excess of the speed limit. Even if the legal speed limit permits it, do not drive over 140 km/h (85 mph) unless your vehicle has high–speed capability tires. Driving over 140 km/h (85 mph) may result in tire failure, loss of control and possible injury. Be sure to consult a tire dealer to determine whether the tires on your vehicle are high–speed capability tires or not before driving at such speeds.**
- **Do not continue normal driving when the brakes are wet. If they are wet, your vehicle will require a longer stopping distance, and it may pull to one side when the brakes are applied. Also, the parking brake will not hold the vehicle securely.**

OFF–ROAD DRIVING PRECAUTIONS

When driving your vehicle off–road, please observe the following precautions to ensure your driving enjoyment and to help prevent the closure of areas to off–road vehicles.

a. Drive your vehicle only in areas where off–road vehicles are permitted to travel.

b. Respect private property. Get owner's permission before entering private property.

c. Do not enter areas that are closed. Honor gates, barriers and signs that restrict travel.

d. Stay on established roads. When conditions are wet, driving techniques should be changed or travel delayed to prevent damage to roads.

For owners in U.S. mainland, Hawaii and Puerto Rico:

To obtain additional information pertaining to driving your vehicle off–road, consult the following organizations.

- State and Local Parks and Recreation Departments
- State Motor Vehicle Bureau
- Recreational Vehicle Clubs
- U.S. Forest Service and Bureau of Land Management

CAUTION

Always observe the following precautions to minimize the risk of serious personal injury or damage to your vehicle:

- **Drive carefully when off the road. Do not take unnecessary risks by driving in dangerous places.**
- **Do not grip the steering wheel spokes when driving off–road. A bad bump could jerk the wheel and injure your hands. Keep both hands and especially your thumbs on the outside of the rim.**
- **Always check your brakes for effectiveness immediately after driving in sand, mud, water or snow.**
- **After driving through tall grass, mud, rock, sand, rivers, etc., check that there is no grass, bush, paper, rags, stone, sand, etc. adhering or trapped on the underbody. Clear off any such matter from the underbody. If the vehicle is used with these materials trapped or adhering to the underbody, a breakdown or fire could occur.**
- **The driver and all passengers should fasten their seat belts whenever the vehicle is moving.**

NOTICE

- ***If driving through water, such as when crossing shallow streams, first check the depth of the water and the bottom of the river bed for firmness. Drive slowly and avoid deep water.***
- ***Take all necessary safety measures to ensure that damage to the engine or other components does not occur.***

  Water entering the engine air intake will cause severe engine damage.

  Water can wash the grease from wheel bearings, causing rusting and premature failure, and may also enter the differentials, transmission and transfer case, reducing the gear oil's lubricating qualities.
- ***Sand and mud that has accumulated in brake drums and around brake discs may affect braking efficiency and may damage brake system components.***
- ***Always perform a maintenance inspection after each day of off–road driving that has taken you through rough terrain, sand, mud, or water. For scheduled maintenance information, refer to the separate "Owner's Manual Supplement/ Maintenance Schedule".***

WINTER DRIVING TIPS

Make sure you have ethylene–glycol antifreeze in the radiator.

NOTICE
Do not use alcohol type antifreeze.

Check the condition of the battery and cables.

Cold temperatures reduce the capacity of any battery, so it must be in top shape to provide enough power for winter starting. Page 224 tells you how to visually inspect the battery. Your Lexus dealer and most service stations will be pleased to check the battery charge level.

Make sure the engine oil viscosity is suitable for the cold weather.

See page 204 for recommended viscosity. Leaving a heavy summer oil in your vehicle during winter months may cause harder starting. If you are not sure about which oil to use, call your Lexus dealer – they will be pleased to help.

Check the electronic ignition system/distributor ignition system for loose connections or obvious damage.

Keep the door locks from freezing.

Squirt lock de–icer or glycerine into the locks to keep them from freezing. To open a frozen lock, try heating the key before inserting it.

Use a washer fluid containing an antifreeze solution.

This product is available at your Lexus dealer and most auto parts stores. Follow the manufacturer's directions for how much to mix with water.

NOTICE
Do not use engine antifreeze or any other substitute (as washer fluid) because it may damage your vehicle's paint.

Do not use your parking brake when there is a possibility it could freeze.

When parking, put the transmission into "P" and block the front wheels. Do not use the parking brake, or snow or water accumulated in and around the parking brake mechanism may freeze the parking brake, making it hard to release.

Keep ice and snow from accumulating under the fenders.

Ice and snow built up under your fenders can make steering difficult. During bad winter driving, stop and check under the fenders occasionally.

Depending on where you are driving, we recommend you carry some emergency equipment.

Some of the things you might put in the vehicle are tire chains, window scraper, bag of sand or salt, flares, small shovel, jumper cables, etc.

TRAILER TOWING

Your vehicle is designed primarily as a passenger–and–load carrying vehicle. Towing a trailer will have an adverse effect on handling, performance, braking, durability and driving economy (fuel consumption, etc.). Your safety and satisfaction depend on the proper use of correct equipment and cautious driving habits. For your safety and the safety of others, you must not overload your vehicle or trailer. Lexus warranties do not apply to damage or malfunction caused by towing a trailer for commercial purposes. Ask your local Lexus dealer for further details before towing.

NOTICE

When towing a trailer, be sure to consult your Lexus dealer for further information on additional requirements.

Weight limits

Before towing, make sure the total trailer weight, gross vehicle weight, gross axle weight and trailer tongue load are all within the limits.

The total trailer weight and tongue load can be measured with platform scales found at a highway weighing station, building supply company, trucking company, junk yard, etc.

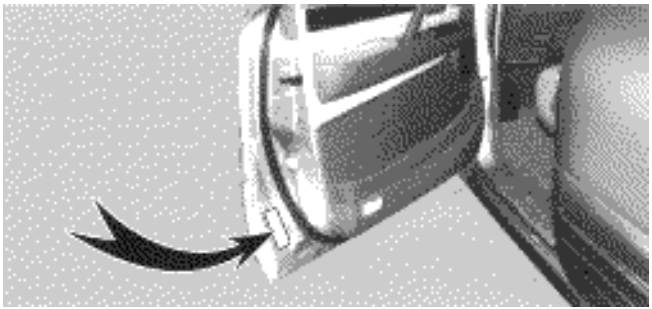

▶ ***Certification label***

CAUTION

- **The total trailer weight (trailer weight plus its cargo load) must not exceed the following. Exceeding this weight is dangerous. If towing a trailer over 907 kg (2000 lb.), it is necessary to use a sway control device with a sufficient capacity.**

Without towing package	**1587 kg (3500 lb.)**
With towing package	**2268 kg (5000 lb.)**

- **The gross combination weight (sum of your vehicle weight plus its load and the total trailer weight) must not exceed the following:**

Without towing package	**4547 kg (10025 lb.)**
With towing package	**5228 kg (11525 lb.)**

- **The gross vehicle weight must not exceed the Gross Vehicle Weight Rating (GVWR) indicated on the Certification Label. The gross vehicle weight is the sum weight of the unloaded vehicle, driver, passengers, luggage, hitch and trailer tongue load. It also includes the weight of any special equipment installed on your vehicle.**
- **The load on either the front or rear axle resulting from distribution of the gross vehicle weight on both axles must not exceed the Gross Axle Weight Rating (GAWR) listed on the Certification Label.**

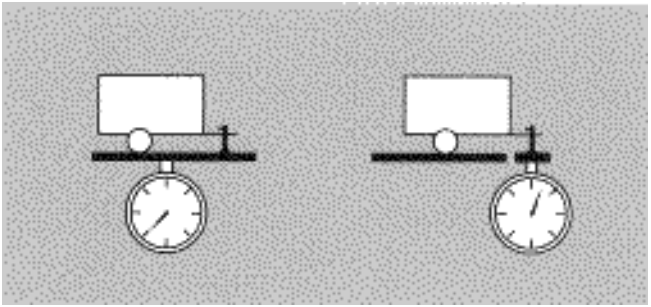

▶ ***Total trailer weight*** ▶ ***Tongue load***

- **The trailer cargo load should be distributed so that the tongue load is 9 to 11% of the total trailer weight, not exceeding the maximum of the following.**

$$\frac{\text{Tongue load}}{\text{Total trailer weight}} \times 100 = 9 \text{ to } 11\%$$

Without towing package	**158 kg (350 lb.)**
With towing package	**226 kg (500 lb.)**

- **Never load the trailer with more weight in the back than in the front. About 60% of the trailer load should be in the front half of the trailer and the remaining 40% in the rear.**

Hitches

- Use only a weight carrying hitch designed for the total trailer weight. Lexus does not recommend using a weight distribution (load equalizing) hitch.
- The hitch must be bolted securely to the vehicle frame and installed according to the hitch manufacturer's instructions.
- The hitch ball and king pin should have a light coat of grease.
- Lexus recommends removing the trailer hitch whenever you are not towing a trailer to reduce the possibility of additional damage caused by the hitch if your vehicle is struck from behind. After removing the hitch, seal any mounting holes in the vehicle body to prevent entry of pollutants such as exhaust fumes, dirt, water, etc.

NOTICE

- ***Install the trailer hitch using only the position recommended by your Lexus dealer. Do not install the trailer hitch on the bumper; this may cause body damage.***
- ***Do not use axle–mounted hitches as they can cause damage to the axle housing, wheel bearings, wheels or tires.***

Brakes and safety chains

- **Lexus recommends trailers with brakes that conform to any applicable federal and state/provincial regulations.**
- **A safety chain must always be used between the towing vehicle and the trailer. Leave sufficient slack in the chain for turns. The chain should cross under the trailer tongue to prevent the tongue from dropping to the ground in case it becomes damaged or separated. For correct safety chain procedures, follow the hitch or trailer manufacturer's recommendations.**

CAUTION

- **If the total trailer weight exceeds 453 kg (1000 lb.), trailer brakes are required.**
- **Never tap into your vehicle's hydraulic system as it will lower its braking effectiveness.**
- **Never tow a trailer without using a safety chain securely attached to both the trailer and the vehicle. If damage occurs to the coupling unit or hitch ball, there is possible danger of the trailer wandering over into another lane.**

Tires

- Ensure that your vehicle's tires are properly inflated. Adjust the tire pressure to the recommended cold tire pressure indicated below:
  Tire pressure, kPa (kgf/cm^2 or bar, psi)

Front	220 (2.2, 32)
Rear	240 (2.4, 35)

- The trailer tires should be inflated to the pressure recommended by the trailer manufacturer in respect to the total trailer weight.

Trailer lights

- Trailer lights must comply with federal, state/provincial and local regulations. See your local recreational vehicle dealer or rental agency for the correct type of wiring and relays for your trailer. Check for correct operation of the turn signals and stop lights each time you hitch up. Direct splicing may damage your vehicle's electrical system and cause a malfunction of your lights.

Break–in schedule

- Lexus recommends that you do not tow a trailer with a new vehicle or a vehicle with any new power train component (engine, transmission, differential, wheel bearing, etc.) for the first 800 km (500) miles) of driving.

Maintenance

- If you tow a trailer, your vehicle will require more frequent maintenance due to the additional load. For this information, please refer to the scheduled maintenance information in the "Owner's Manual Supplement/Maintenance Schedule".
- Retighten all fixing bolts of the towing ball and bracket after approximately 1000 km (600 miles) of trailer driving.

Pre–towing safety check

- Check that your vehicle remains level when a loaded or unloaded trailer is hitched. Do not drive if the vehicle has an abnormal nose–up or nose–down condition, and check for improper tongue load, overload, worn suspension or other possible causes.
- Make sure the trailer cargo is securely loaded so that it cannot shift.
- Check that your rear view mirrors conform to any federal, state/provincial or local regulation. If they do not, install required rear view mirrors appropriate for towing purposes.

Trailer towing tips

When towing a trailer, your vehicle will handle differently than when not towing. The three main causes of vehicle–trailer accidents are driver error, excessive speed and improper trailer loading. Keep these in mind when towing:

- Before starting out, check the operation of the lights and all vehicle–trailer connections. After driving a short distance, stop and recheck the lights and connections. Practice turning, stopping and backing with a trailer in an area away from traffic until you learn the feel.
- Backing with a trailer is difficult and requires practice. Grip the bottom of the steering wheel and move your hand to the left to move the trailer to the left. Move your hand to the right to move the trailer to the right. (This procedure is generally opposite to that when backing without a trailer.) Also, just turn the steering wheel a little at a time, avoiding sharp or prolonged turning. Have someone guide you when backing to reduce the risk of an accident.
- Because stopping distance may be increased, vehicle–to–vehicle distance should be increased when towing a trailer. For each 16 km/h (10 mph) of speed, allow at least one vehicle and trailer length between you and the vehicle ahead. Avoid sudden braking as you may skid, resulting in jackknifing and loss of control. This is especially true on wet or slippery surfaces.
- Avoid jerky starts or sudden acceleration.
- Avoid jerky steering and sharp turns. The trailer could hit your vehicle in a tight turn. Slow down before making a turn to avoid the need of sudden braking.
- Remember that when making a turn, the trailer wheels will be closer than the vehicle wheels to the inside of the turn. Therefore, compensate for this by making a larger than normal turning radius with your vehicle.
- Crosswinds and rough roads will adversely affect handling of your vehicle and trailer, causing sway. Pay attention to the rear from time to time to prepare yourself for being passed by large trucks or buses, which may cause your vehicle and trailer to sway. If swaying happens, firmly grip the steering wheel and reduce speed immediately but gradually. Never increase speed. If it is necessary to reduce speed, brake slowly. Steer straight ahead. If you make no extreme correction with the steering or brakes, your vehicle and trailer will stabilize.
- Be careful when passing other vehicles. Passing requires considerable distance. After passing a vehicle, do not forget the length of your trailer and be sure you have plenty of room before changing lanes.
- In order to maintain efficient engine braking and electrical charging performance, do not use overdrive.

- Because of the added load of the trailer, your vehicle's engine may overheat on hot days (at temperatures over 30°C [85°F]) when going up a long or steep grade with a trailer. If the engine coolant temperature gauge indicates overheating, immediately turn off the air conditioning (if in use), pull your vehicle off the road and stop in a safe spot. See "If your vehicle overheats" on page 167 of this manual.
- Always place wheel blocks under both the vehicle and trailer wheels when parking. Apply the parking brake firmly. Put the transmission in "P". Avoid parking on a slope with a trailer, but if it cannot be avoided, do so only after performing the following:

1. Apply the brakes and keep them applied.
2. Have someone place wheel blocks under both the vehicle and trailer wheels.
3. When the wheel blocks are in place, release your brakes slowly until the blocks absorb the load.
4. Apply the parking brake firmly.
5. Shift into "P" and turn off the engine.

When restarting out after parking on a slope:

1. With the transmission in "P" position, start the engine. Be sure to keep the brake pedal depressed.
2. Shift into the "2", "L" or "R" position.
3. Release the parking brake and brake pedal and slowly pull or back away from the wheel blocks. Stop and apply your brakes.
4. Have someone retrieve the blocks.

CAUTION

- **Do not exceed 72 km/h (45 mph) or the posted towing speed limit, whichever is lower. Because instability (swaying) of a towing vehicle–trailer combination usually increases as the speed increases, exceeding 72 km/h (45 mph) may cause loss of control.**
- **Slow down and downshift before descending steep or long downhill grades. Do not make sudden downshifts.**
- **Avoid holding the brake pedal down too long or too frequently. This could cause the brakes to overheat and result in reduced braking efficiency.**

HOW TO SAVE FUEL AND MAKE YOUR VEHICLE LAST LONGER

Getting more kilometer/mileage from a liter/gallon of fuel is easy – just take it easy. It will help make your vehicle last longer, too. Here are some specific tips on how to save money on both fuel and repairs:

- **Keep your tires inflated at the correct pressure.** Check the pressure every two weeks, or at least once a month. Underinflation causes tire wear and wastes fuel.
- **Do not carry unneeded weight in your vehicle.** Excess weight puts a heavier load on the engine, causing greater fuel consumption.
- **Avoid lengthy warm–up idling.** Once the engine is running smoothly, begin driving – but gently. Remember, however, that on cold winter days this may take a little longer.
- **Accelerate slowly and smoothly.** Avoid jackrabbit starts.
- **Avoid long engine idling.** If you have a long wait and you are not in traffic, it is better to turn off the engine and start again later.
- **Avoid engine overrevving.** Use a gear position suitable for the road on which you are traveling.
- **Avoid continuous speeding up and slowing down.** Stop–and–go driving wastes fuel.
- **Avoid unnecessary stopping and braking.** Maintain a steady pace. Try to time the traffic signals so you only need to stop as little as possible or take advantage of through streets to avoid traffic lights. Keep a proper distance from other vehicles to avoid sudden braking. This will also reduce wear on your brakes.
- **Avoid heavy traffic or traffic jams whenever possible.**
- **Do not rest your foot on the brake pedal.** This causes needless wear, overheating and poor fuel economy.
- **Maintain a moderate speed on highways.** The faster you drive, the greater the fuel consumption. By reducing your speed, you will cut down on fuel consumption.
- **Keep the front wheels in proper alignment.** Avoid hitting the curb and slow down on rough roads. Improper alignment not only causes faster tire wear but also puts an extra load on the engine, which, in turn, wastes fuel.
- **Keep the bottom of your vehicle free from mud, etc.** This not only lessens weight but also helps prevent corrosion.
- **Keep your vehicle tuned–up and in top shape.** A dirty air cleaner, improper valve clearance, dirty plugs, dirty oil and grease, brakes not adjusted, etc. all lower engine performance and contribute to poor fuel economy. For longer life of all parts and lower operating costs, keep all maintenance work on schedule, and if you often drive under severe conditions, see that your vehicle receives more frequent maintenance. (For scheduled maintenance information, please refer to the separate “Owner’s Manual Supplement/Maintenance Schedule”.)

CAUTION

Never turn off the engine to coast down hills. Your power steering and brake booster will not function without the engine running. Also, the emission control system operates properly only when the engine is running.

SECTION 4

IN CASE OF AN EMERGENCY

If your engine stalls while driving ---------- 164
If your vehicle will not start ---------- 164
If your vehicle overheats ---------- 167
If you have a flat tire ---------- 168
If your vehicle needs to be towed ---------- 175
If you cannot shift automatic transmission selector lever ---------- 180
If you lose your keys or lock yourself out ---------- 181

IF YOUR ENGINE STALLS WHILE DRIVING

If your engine stalls while driving....

1. Reduce your speed gradually, keeping a straight line. Move cautiously off the road to a safe place.
2. Turn on your emergency flashers.
3. Try starting the engine again.

If the engine will not start, see “If your vehicle won’t start.”

CAUTION

If the engine is not running, the power assist for the brakes and steering will not work, so steering and braking will be much harder than usual.

IF YOUR VEHICLE WILL NOT START

(a) Simple checks

Before making these checks, make sure you have followed the correct starting procedure instructions in “How to start the engine” on page 130 and that you have sufficient fuel.

If the engine is not turning over or is turning over too slowly –

1. Check that the battery terminals are tight and clean.
2. If the battery terminals are O.K., switch on the interior light.
3. If the light is out, dim or goes out when the starter is cranked, the battery is discharged. You may try jump starting. See “(c) Jump starting” for further instruction.

If the light is O.K., but the engine still will not start, it needs adjustment or repair. Call a Lexus dealer, Roadside Assistance or Customer Service Assistance. (See “Foreword.”)

NOTICE

Do not pull– or push–start the vehicle. It may damage the vehicle or cause a collision when the engine starts. Also the three–way catalytic converter may overheat and become a fire hazard.

If the engine turns over at its normal speed but will not start –

1. Check that all the push–on connectors are tight. (For example, connectors at the distributor and spark plugs)
2. If the connectors are O.K., the engine may be flooded because of repeated cranking. See “(b) Starting a flooded engine” for further instructions.
3. If the engine still will not start, it needs adjustment or repair. Call a Lexus dealer, Roadside Assistance or Customer Service Assistance. (See “Foreword.”)

(b) Starting a flooded engine

If the engine will not start, your engine may be flooded because of repeated cranking.

If this happens, turn the key to “START” with the accelerator pedal held down. Continue this operation for 15 seconds and then stop cranking. Then try starting the engine with your foot off the accelerator pedal.

If the engine does not start after 15 seconds of cranking, release the key, wait a few minutes and try again.

If the engine still will not start, it needs adjustment or repair. Call a Lexus dealer, Roadside Assistance or Customer Service Assistance. (See “Foreword.”)

NOTICE

Do not crank for more than 15 seconds at a time. This may overheat the starter and wiring systems.

(c) Jump starting

To avoid serious personal injury and damage to your vehicle which might result from battery explosion, acid burns, electrical burns, or damaged electronic components, these instructions must be followed precisely.

If you are unsure about how to follow this procedure, we strongly recommend that you seek help from your Lexus dealer, Roadside Assistance or Customer Service Assistance. (See “Foreword”.)

CAUTION

- **Batteries contain sulfuric acid which is poisonous and corrosive. Wear protective safety glasses when jump starting, and avoid spilling acid on your skin, clothing, or vehicle.**
- **If you should accidentally get acid on yourself or in your eyes, remove any contaminated clothing and flush the affected area with water for at least 15 minutes. Then get immediate medical attention. If possible, continue to apply water with a sponge or cloth while en route to the medical office.**
- **The gas normally produced by a battery will explode if a flame or spark is brought near. Use only standardized jumper cables and do not smoke or light a match while jump starting.**

NOTICE

The battery used for boosting must be 12 V. Do not jump start unless you are sure that the booster battery is correct.

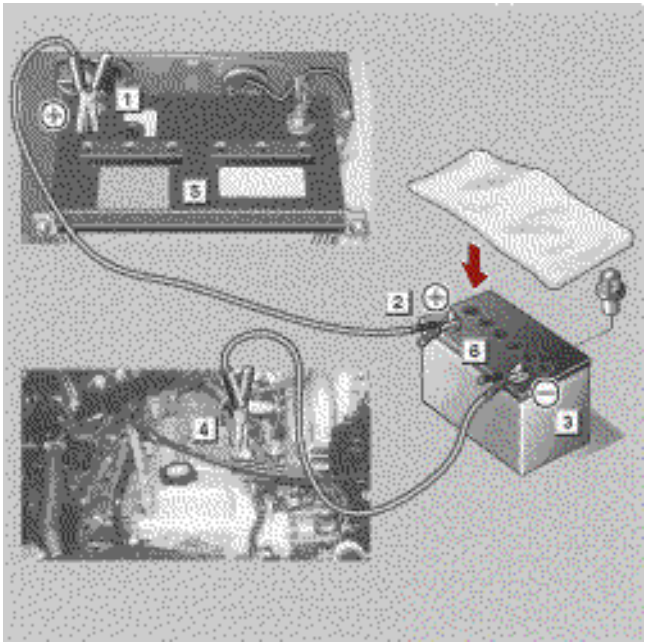

▶ 5 ***Discharged battery*** 6 ***Booster battery***

JUMP STARTING PROCEDURE

1. If the booster battery is installed in another vehicle, make sure the vehicles are not touching. Turn off all unnecessary lights and accessories.

2. If required, remove all the vent plugs from the booster battery. Lay a cloth over the open vents on the booster battery. (This helps reduce the explosion hazard, personal injuries and burns.)

If the booster battery is an extended maintenance interval battery, it is not necessary to remove the vent plugs.

3. If the engine in the vehicle with the booster battery is not running, start it and let it run for about 5 minutes. During jump starting, run the engine at about 2000 rpm with the accelerator pedal lightly depressed.

4. Locate positive (+) and negative (–) terminals of each battery. Connect the jumper cables in the exact order (1 2 3 4) shown in the illustration.

1 Connect a positive (red) jumper cable clamp to the positive (+) terminal of the discharged battery.

2 Connect the clamp at the other end of the positive (red) cable to the positive (+) terminal of the booster battery.

3 Connect a negative (black) cable clamp to the negative (–) terminal of the booster battery.

4 Connect the clamp at the other end of the negative (black) cable to a solid, stationary, unpainted metallic point (e.g. engine hanging hook) away from the battery. Do not connect it to or near any part that moves when the engine is cranked.

NOTICE

When making the connections, do not lean over the battery or accidentally let the jumper cables or clamps touch anything except the correct battery terminals or the ground.

5. Start your engine in the normal way. After starting, run it at about 2000 rpm for several minutes with the accelerator pedal lightly depressed.
6. Carefully disconnect the cables in the exact reverse order: the negative cable and then the positive cable.
7. Carefully dispose of the battery cover cloths which may now contain sulfuric acid.
8. If removed, replace all the battery vent plugs.

If the cause of your battery discharging is not apparent (for example, lights left on), you should have it checked.

IF YOUR VEHICLE OVERHEATS

If your engine coolant temperature gauge indicates overheating, if you experience a loss of power, or if you hear a loud knocking or pinging noise, the engine has probably overheated. You should follow this procedure...

1. Pull safely off the road, stop the vehicle and turn on your emergency flashers. Put the transmission in “P” and apply the parking brake. Turn off the air conditioning if it is being used.
2. If coolant or steam is boiling out of the radiator or reservoir, stop the engine. Wait until the steam subsides before opening the hood. If there is no coolant boiling over or steam, leave the engine running and make sure the engine cooling fan is operating. If it is not, turn the ignition off.

CAUTION

To help avoid personal injury, keep the hood closed until there is no steam. Escaping steam or coolant is a sign of very high pressure.

3. Visually check to see if the engine drive belt (fan belt) is broken or loose. Look for obvious coolant leaks from the radiator, hoses, and under the vehicle. However, note that water draining from the air conditioning is normal if it has been in use.

CAUTION

When the engine is running, keep hands and clothing away from the moving fan and engine drive belts.

4. If the engine drive belt is broken or the coolant is leaking, stop the engine immediately. Call a Lexus dealer, Roadside Assistance or Customer Service Assistance. (See “Foreword”.)

5. If the engine drive belt is O.K., and there are no obvious leaks, you may help the engine cool down more quickly by running it at about 1500 rpm for a few minutes with the accelerator pedal lightly depressed.

6. Check the coolant reservoir. If it is dry, add coolant to the reservoir while the engine is running. Fill it about half full.

CAUTION

Do not attempt to remove the radiator cap when the engine and radiator are hot. Serious injury could result from scalding hot fluid and steam blown out under pressure.

7. After the engine coolant temperature has cooled to normal, again check the coolant level in the reservoir. If necessary, bring it up to half full again. Serious coolant loss indicates a leak in the system. You should have it checked as soon as possible by your Lexus dealer.

IF YOU HAVE A FLAT TIRE

1. Reduce your speed gradually, keeping a straight line. Move cautiously off the road to a safe place – well away from the traffic. Avoid stopping on the center divider of a highway. Park on a level spot with firm ground.
2. Stop the engine and turn on your emergency flashers.
3. Firmly set the parking brake and put the transmission in “P.”
4. Have everyone get out of the vehicle on the side away from traffic.
5. Read the following instructions thoroughly.

CAUTION

When jacking, be sure to observe the following to reduce the possibility of personal injury:

- **Follow jacking instructions.**
- **Use a jack only for lifting your vehicle during wheel changing.**
- **Never get beneath the vehicle when supported by a jack.**
- **Do not start or run the engine while your vehicle is supported by a jack.**

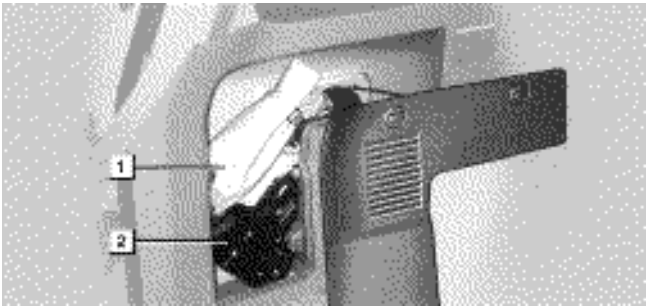

▶ 1 ***Tool bag*** 2 ***Jack***

1. Get the tool, jack and spare tire.

To prepare yourself for an emergency, you should familiarize yourself with the use of the jack and each tool, and their storage locations.

When storing the jack, put it into place and secure to prevent it from flying forward during a collision or sudden braking.

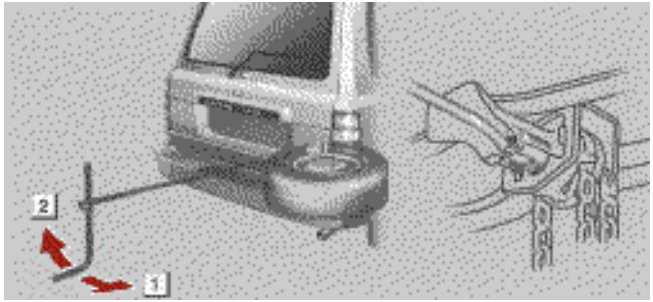

▶ 1 ***Lower*** 2 ***Raise***

To remove the spare tire:

1. Insert the end of the jack handle extension into the lowering screw and turn it counterclockwise with the handle, making sure that the handle remains firmly fitted onto the jack handle extension.
2. After the tire is lowered completely to the ground, remove the holding bracket.

When storing the spare tire, put it in place with the outer side of the wheel facing up. Then secure the tire, taking care that the tire goes straight up without catching on any other part, to prevent it from flying forward during a collision or sudden braking.

2. Block the wheel diagonally opposite the flat tire to keep the vehicle from rolling when it is jacked up.

When blocking a wheel, place a wheel block in front of the front wheels or behind the rear wheels.

▶ ***Paper for protecting surface***

3. Remove the wheel ornament.

Pry off the wheel ornament, using the beveled end of the wheel ornament remover as shown.

CAUTION

Do not try to pull off the ornament by hand. Take due care in handling the ornament to avoid unexpected personal injury.

4. Loosen all the wheel nuts.

Always loosen the wheel nuts before raising the vehicle.

Turn the nuts counterclockwise to loosen them. To get maximum leverage, fit the wrench to the nut so that the handle is on the right side, as shown above. Grab the wrench near the end of the handle and pull up on the handle. Be careful that the wrench does not slip off the nut.

Do not remove the nuts yet – just unscrew them about one–half turn.

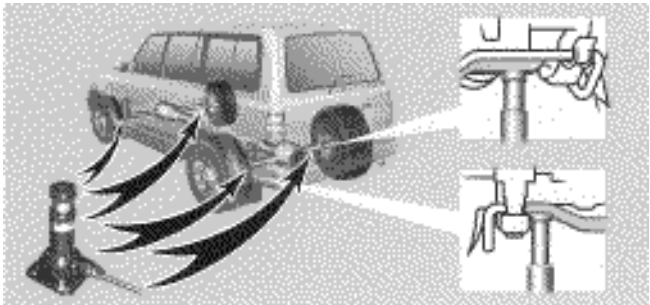

5. Position the jack at the jack points as shown.

Make sure the jack is positioned on a level and solid surface.

JACK POINTS:

Front – Under the front axle housing between the suspension arm and the wheel

Rear – Under the rear axle housing near the wheel

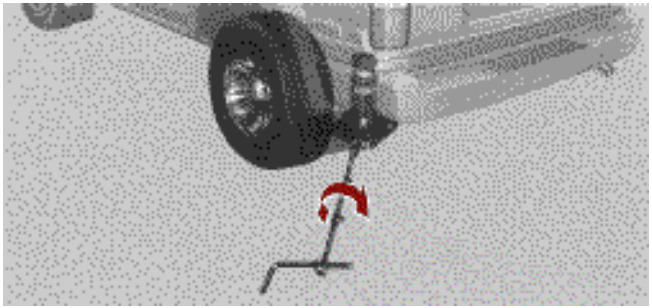

6. After making sure no one is in the vehicle, raise it high enough so that the spare tire can be installed.

Allow for the fact that you need more ground clearance when putting on the spare tire than when removing the flat tire.

To raise the vehicle, insert the jack handle extension into the jack (it is a loose fit) and turn it clockwise with the handle, making sure the handle remains firmly fitted onto the jack handle extension. As the jack touches the vehicle and begins to lift, double–check that it is properly positioned.

CAUTION

Never get under the vehicle when it is supported by the jack alone.

7. Remove the wheel nuts and remove the flat tire.

Lift the flat tire straight off and put it aside.

Roll the spare wheel into position and align the holes in the wheel with the bolts. Then lift up the wheel and get at least the top bolt started through its hole. Wiggle the tire and press it back over the other bolts.

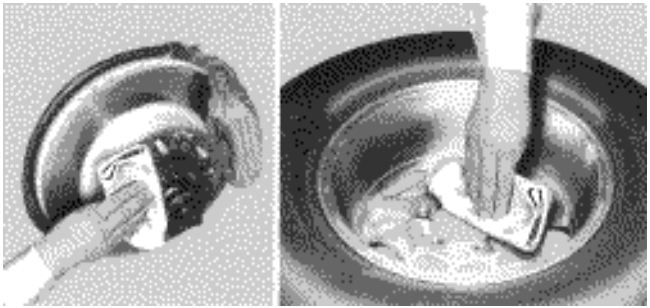

Before putting on the wheel, remove any corrosion on the mounting surfaces with a wire brush or such. Installation of wheels without good metal–to–metal contact at the mounting surface can cause wheel nuts to loosen and eventually cause a wheel to come off while driving. Therefore after the first 1600 km (1000 miles), check to see that the wheel nuts are tight.

8. Reinstall all the wheel nuts finger tight.

Reinstall the wheel nuts and tighten them as much as you can by hand. Press the tire back and see if you can tighten them more.

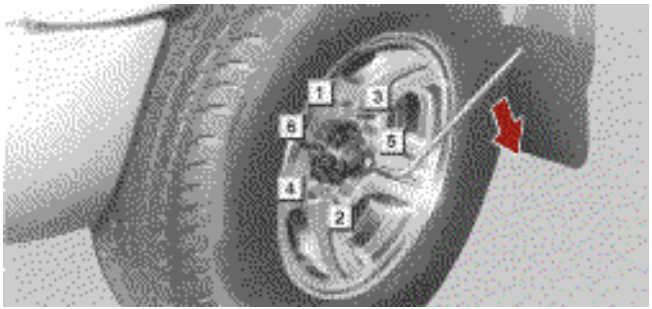

9. Lower the vehicle completely and tighten the wheel nuts.

To lower the vehicle, turn the jack handle extension counterclockwise with the handle, making sure that the handle remains firmly fitted onto the jack handle extension.

Use only the wheel nut wrench to tighten the nuts. Do not use other tools or any additional leverage other than your hands, such as a hammer, pipe or your foot. Make sure the wrench is securely engaged over the nut.

Tighten each nut a little at a time in the order shown. Repeat the process until all the nuts are tight.

CAUTION

As soon as possible after changing wheels, have the wheel nuts tightened by torque wrench at 103 N·m (10.5 kgf·m, 76 ft·lbf.).

10. Reinstall the wheel ornament.

Put the wheel ornament into position and then tap it firmly with the side or heel or your hand to snap it into place.

CAUTION

Take due care in handling the ornament to avoid unexpected personal injury.

11. After changing the wheel, check the air pressure of the replaced tire. Stow all the tools, jack and flat tire securely.

If the pressure of the replaced tire is low, drive slowly to the nearest service station and fill to the correct pressure.

Do not forget to reinstall the tire valve cap as dirt and moisture could get into the valve core and possible cause air leakage. If the cap is missing, put a new one on as soon as possible.

This is the same procedure for changing or rotating your tires.

CAUTION

Before driving, make sure all the tools, jack and flat tire are securely in place in their storage location to reduce the possibility of personal injury during a collision or sudden braking.

IF YOUR VEHICLE NEEDS TO BE TOWED

If towing is necessary, we recommend you have it done by your Lexus dealer or a commercial tow truck service.

Proper equipment will help ensure that your vehicle is not damaged while being towed. Commercial operators are generally aware of the state/provincial and local laws pertaining to towing.

Your vehicle can be damaged if it is towed incorrectly. Although most operators know the correct procedure, it is possible to make a mistake. To avoid damage to your vehicle, make sure the following few precautions are observed. If necessary, show this page to the tow truck driver.

TOWING PRECAUTIONS:

Use a safety chain system for all towing, and abide by the state/provincial and local laws. The wheels and axle on the ground must be in good condition. If they are damaged, use a towing dolly.

1. Using a flat bed truck

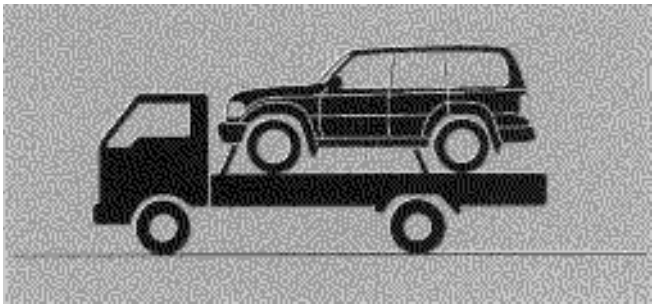

Lexus recommends this as the best method for your vehicle.

• Tie down points

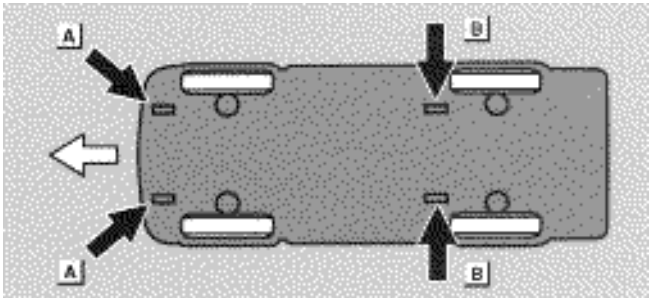

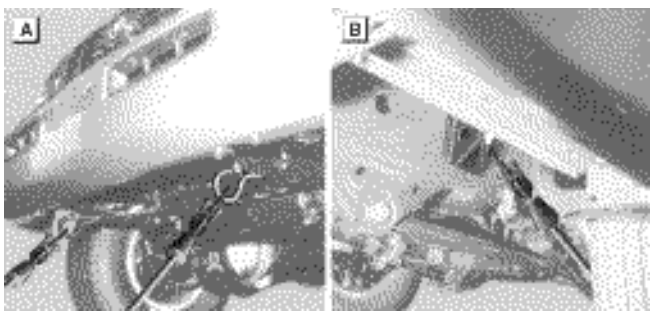

If your Lexus is transported by a flat bed, it should be tied down at locations A and B as shown above.

- **Tie down angle**

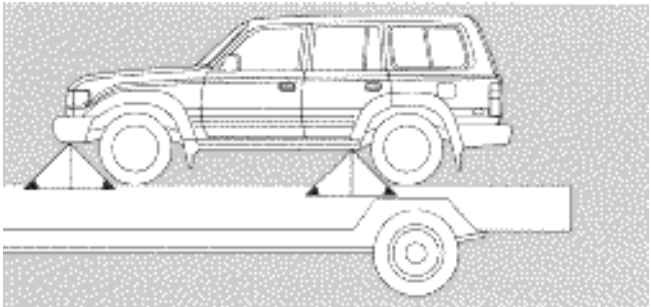

If you use chains or wires to tie down your vehicle, the angles shaded black must be at 45°.

2. Towing with a wheel lift type truck

- **From front**

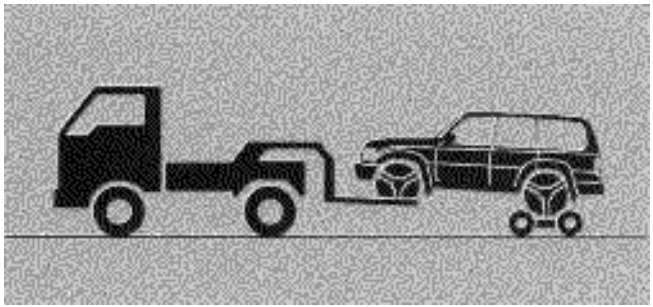

Use a towing dolly under the rear wheels.

NOTICE
Never tow a vehicle with an automatic transmission from the front with rear wheels on the ground, as this may cause serious damage to the transmission.

- **From rear**

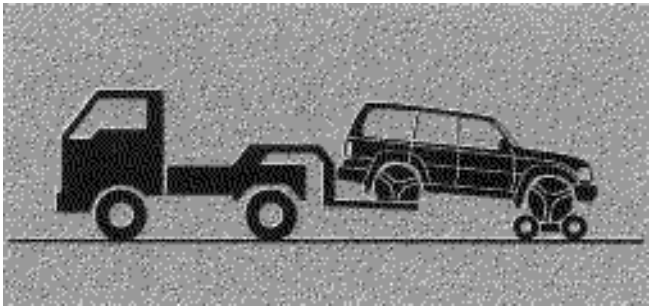

Use a towing dolly under the front wheels.

NOTICE
Never tow a vehicle with an automatic transmission from the rear with front wheels on the ground, as this may cause serious damage to the transmission.

3. Towing with a sling type truck

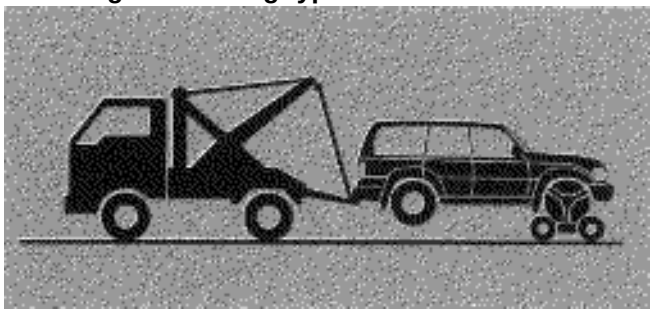

- **From front**

NOTICE
Do not tow with a sling type truck from the front. This may cause body damage.

- **From rear**

Follow the instructions for towing from rear in “2. Towing with wheel lift type truck”.

Emergency towing

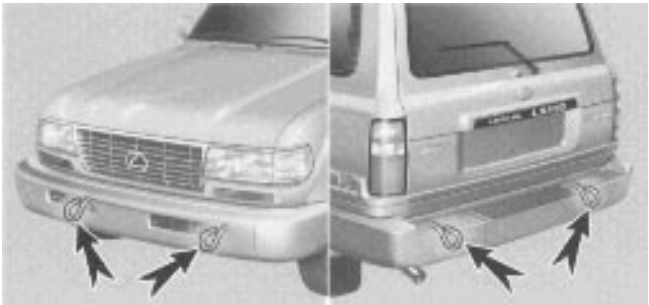

If towing service is not available in an emergency, your vehicle may be temporarily towed by a cable secured to one of the emergency towing eyelets under the front of the vehicle.

A driver must be in the vehicle to steer it and operate the brakes. Towing in this manner may be done only on hard–surfaced roads for a short distance and at low speeds. Also, the wheels, axles, drive train, steering and brakes must all be in good condition.

Before towing, check that the center differential is unlocked. (The indicator light must be off with the ignition off.) Release the parking brake and put the transmission in “N”. The ignition key must be in “ACC” (engine off) or “ON” (engine running).

CAUTION

If the engine is not running, the power assist for the brakes and steering will not work, so steering and braking will be much harder than usual.

IF YOU CANNOT SHIFT AUTOMATIC TRANSMISSION SELECTOR LEVER

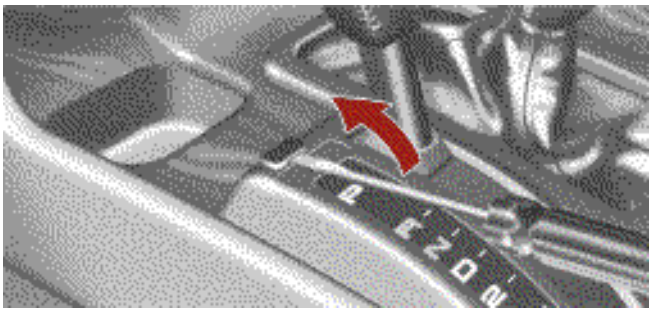

If you cannot shift the selector lever out of “P” position to other positions even though the brake pedal is depressed, use the shift lock override button as follows:

1. Turn the ignition key to “LOCK.” Make sure the parking brake is applied.
2. Pry up the cover with a flat–bladed screwdriver or equivalent.

3. Insert the screwdriver or equivalent into the hole to push down the shift lock override button. You can shift out of “P” position only while pushing the button.
4. Shift into “N” position.
5. Insert the cover.
6. Start the engine. For your safety, keep the brake pedal depressed.

Be sure to have the system checked by your Lexus dealer as soon as possible.

IF YOU LOSE YOUR KEYS OR LOCK YOURSELF OUT

If you need a replacement key, contact your Lexus dealer.

See the suggestions given in “Keys” on page 6.

If your keys are locked in the vehicle and you cannot get a duplicate, many Lexus dealers can assist you. If you must break a window to get in, we suggest breaking the smallest side window because it is the least expensive to replace. Be extremely cautious to avoid cuts from the glass.

SECTION 5

MAINTENANCE

Maintenance requirements ---------- 184
General maintenance ---------- 185
Does your vehicle need repairing? ---------- 188

For scheduled maintenance information, please refer to the separate "Owner's Manual Supplement/Maintenance Schedule".

MAINTENANCE REQUIREMENTS

Your Lexus vehicle has been designed to have fewer maintenance requirements with longer service intervals to save both your time and money. However, each regular maintenance as well as day–to–day care is more important than ever before to ensure smooth, trouble–free, safe, and economical driving.

It is the owner's responsibility to make sure the specified maintenance, including general maintenance services, is performed. Note that both the new vehicle and emission control system warranties specify that proper maintenance and care must be performed. See the Owner's Guide, Owner's Manual Supplement or Warranty Booklet for complete warranty information.

General maintenance

General maintenance items are those day–to–day care practices that are important to your vehicle for proper operation. It is the owner's responsibility to ensure that the general maintenance items are performed regularly.

These checks or inspections can be done either by yourself or your Lexus dealer.

Scheduled maintenance

The scheduled maintenance items listed in the "Owner's Manual Supplement/Maintenance Schedule" are those required to be serviced at regular intervals.

For details of your maintenance schedule, read the separate "Owner's Manual Supplement/Maintenance Schedule."

It is recommended that any replacement parts used for maintenance or for the repair of the emission control system be Lexus supplied.

The owner may elect to use non–Lexus supplied parts for replacement purposes without invalidating the emission control system warranty. However, use of replacement parts which are not of equivalent quality may impair the effectiveness of the emission control systems.

You may also elect to have maintenance, replacement, or repair of the emission control devices and system performed by any automotive repair establishment or individual without invalidating this warranty. See Owner's Guide, Owner's Manual Supplement or Warranty Booklet for complete warranty information.

Where to go for service?

Lexus technicians are well–trained specialists and are kept up to date with the latest service information through technical bulletins, service tips, and in–dealership training programs. They are well informed about the operation of all the systems on your vehicle.

You can be confident that your Lexus dealer's service department performs the best job to meet the maintenance requirements of your vehicle – reliably and economically.

Your copy of the repair order is proof that all required maintenance has been performed for warranty coverage. And if any problems should arise with your vehicle while under warranty, your Lexus dealer will promptly take care of it. Again, be sure to keep a copy of the repair order for any service performed on your Lexus.

What about do–it–yourself maintenance?

Many of the maintenance items are easy to do yourself, if you have a little mechanical ability and a few basic automotive tools. Simple instructions for how to perform them are presented in Section 6.

If you are a skilled do–it–yourself mechanic, the Lexus service manuals are recommended. Please be aware that do–it–yourself maintenance can affect your warranty coverage. See your Owner's Guide, Owner's Manual Supplement or Warranty Booklet for the details.

GENERAL MAINTENANCE

Listed below are the general maintenance items that should be performed at the intervals specified. It is recommended that any problem you notice be brought to the attention of your Lexus dealer or qualified service shop for their advice.

CAUTION

Make these checks only where adequate ventilation can be obtained if you run the engine.

Vehicle exterior

Items listed below should be performed from time to time, unless otherwise specified.

Tire pressure

Check the pressure with a gauge every two weeks, or at least once a month and adjust as shown on the tire pressure label. See page 213 for additional information.

Tire surface

Check the tires carefully for cuts, damage or excessive wear. See page 215 for additional information.

Wheel nuts

When checking the tires, make sure to check the nuts for looseness. Tighten them if necessary.

Tire rotation

Rotate the tires every 5000 km (3000 miles). See page 214 for additional information.

Fluid leaks

Check underneath for leaking fuel, oil, water or other fluid after the vehicle has been parked for a while. If you smell fuel fumes or notice any leak, have the cause found and corrected immediately.

Doors and engine hood

Check that all doors and back door operate smoothly and all latches lock securely. Make sure the engine hood secondary latch secures the hood when the primary latch is released.

Vehicle interior

Items listed below should be checked regularly, e.g. while performing periodic services, cleaning the vehicle, etc.

Lights

Make sure the headlights, stop lights, tail lights, turn signal lights, and other lights are working. Check headlight aim.

Service reminder indicators and warning buzzers

Check that all service reminder indicators and warning buzzers function properly.

Steering wheel

Check that it has the specified freeplay. Be alert for changes in steering condition, such as hard steering, excessive freeplay or strange noise.

Seats

Check that all front seat controls such as seat adjusters, seatback recliner, etc. operate smoothly and that all latches lock securely in any position. Check that the head restraints move up and down smoothly and that the locks hold securely in any latched position. For folding–down rear seatbacks, swing–up rear seat cushions and detachable third seats, check that the latches lock securely.

Seat belts

Check that the seat belt system such as buckles, retractors and anchors operate properly and smoothly. Make sure the belt webbing is not cut, frayed, worn or damaged.

Accelerator pedal

Check the pedal for smooth operation and uneven pedal effort or catching.

Brake pedal

Check the pedal for smooth operation and the proper clearance and freeplay. Check the brake booster function.

Brakes

At a safe place, check that the brakes do not pull to one side when applied.

Parking brake

Check that the pedal has the proper travel and that, on a safe incline, your vehicle is held securely with only the parking brake applied.

Automatic transmission “Park” mechanism

Check the lock release button of the selector lever for proper and smooth operation. On a safe incline, check that your vehicle is held securely with the selector lever in “P” position and all brakes released.

Engine compartment

Items listed below should be checked from time to time, e.g. each time when refueling.

Washer fluid

Make sure there is sufficient fluid in the tank. See page 233 for additional information.

Engine coolant level

Make sure the coolant level is between the Upper and Lower lines on the see–through reservoir when the engine is cool. See page 205 for additional information.

Battery

Your Lexus has a maintenance free battery. You do not have to add distilled water. For longer life of the battery, however, see page 224 for additional information.

Brake fluid level

Make sure the brake fluid level is correct. See page 211 for additional information.

Engine oil level

Check the level on the dipstick with the engine turned off and the vehicle parked on a level spot. See page 203 for additional information.

Power steering fluid level

Check the level on the dipstick. The level should be in the “HOT” or “COLD” range depending on the fluid temperature. See page 212 for additional information.

Exhaust system

Look for cracks, holes and loose supports. If you notice any change in the sound of the exhaust or smell exhaust fumes, have the cause located and corrected immediately. (See engine exhaust cautions in Section 3–1.)

DOES YOUR VEHICLE NEED REPAIRING?

Be on the alert for changes in performances and sounds, and visual tip–offs that indicate service is needed. Some important clues are:

- Engine missing, stumbling, or pinging
- Appreciable loss of power
- Strange engine noises
- A fluid leak under the vehicle (However, water dripping from the air conditioning after use is normal.)
- Change in exhaust sound (This may indicate a dangerous carbon monoxide leak. Drive with the windows open and have the exhaust system checked immediately.)
- Flat–looking tires, excessive tire squeal when cornering, uneven tire wear
- Vehicle pulls to one side when driving straight on a level road
- Strange noises related to suspension movement
- Loss of brake effectiveness, spongy feeling brake pedal, pedal almost touches floors, vehicle pulls to one side when braking
- Engine coolant temperature continually higher than normal
- Engine continually runs hot; oil pressure gauge stays low.

If you notice any of these clues, take your vehicle to your Lexus dealer as soon as possible. It probably needs adjustment or repair.

CAUTION

Do not continue driving with the vehicle unchecked. It could result in serious vehicle damage and possibly personal injury.

SECTION 6 – 1

SERVICE PROCEDURES AND SPECIFICATIONS

Introduction

Vehicle identification ---------- 190
Engine compartment overview---------- 191
Do–it–yourself service precautions ---------- 192
Parts and tools ---------- 193

VEHICLE IDENTIFICATION

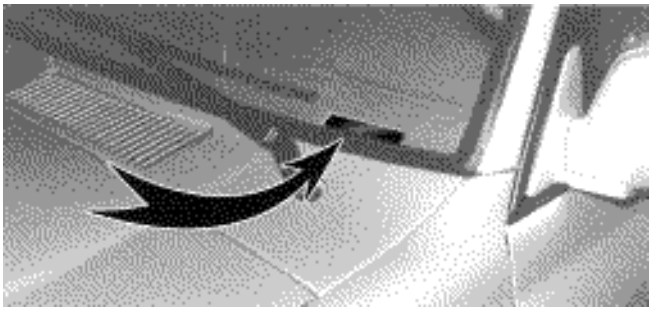

The vehicle identification number (VIN) is the legal identifier for your vehicle. This number is on the left top of the instrument panel and can be seen through the windshield from outside.

This is the primary identification number for your Lexus. It is used in registering the ownership of your vehicle.

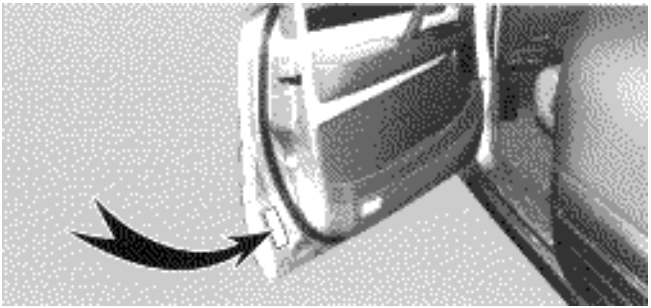

The vehicle identification number (VIN) is also on the Certification Label.

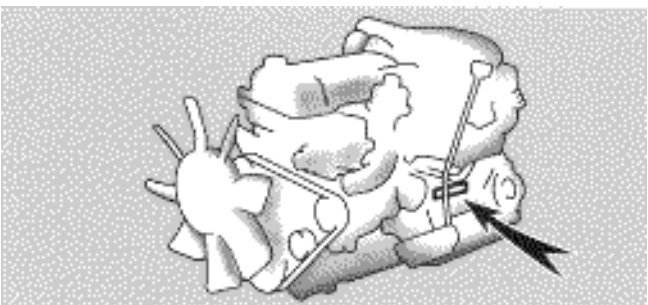

The engine number is stamped on the engine block as shown.

ENGINE COMPARTMENT OVERVIEW

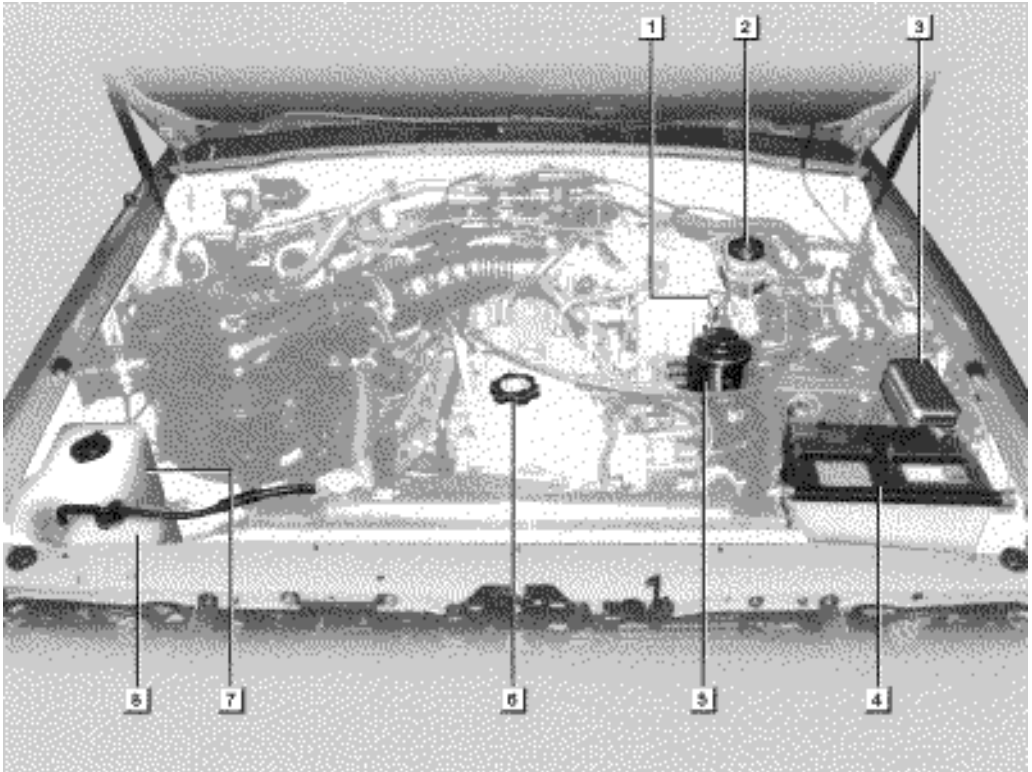

1. *Engine oil level dipstick*
2. *Brake fluid reservoir*
3. *Fuse box*
4. *Battery*
5. *Power steering fluid reservoir*
6. *Engine oil filler cap*
7. *Washer fluid tank*
8. *Engine coolant reservoir*

DO–IT–YOURSELF SERVICE PRECAUTIONS

If you perform maintenance yourself, be sure to follow the correct procedure given in this Section.

You should be aware that improper or incomplete servicing may result in operating problems.

Performing do–it–yourself maintenance during the warranty period may affect your warranty coverage. Read the separate Lexus Warranty statement for details and suggestions.

This Section gives instructions only for those items that are relatively easy for an owner to perform. As explained in Section 5, there are still a number of items that must be performed by a qualified technician with special tools.

For information on tools and parts for do–it–yourself maintenance, see “Parts and tools.”

Utmost care should be taken when working on your vehicle to prevent accidental injury. Here are a few precautions that you should be especially careful to observe:

CAUTION

- **When the engine is running, keep hands, clothing, and tools away from the moving fan and engine drive belt. (Removing rings, watches, and ties is advisable.)**
- **Right after driving, the engine compartment – the engine, radiator, exhaust manifold and power steering fluid reservoir and spark plug boots, etc. – will be hot. So be careful not to touch them. Oil, other fluids and spark plugs may also be hot.**
- **If the engine is hot, do not remove the radiator cap or loosen the drain plugs to prevent burning yourself.**
- **Do not smoke, cause sparks or allow open flames around fuel or the battery. Their fumes are flammable.**
- **Be extremely cautious when working on the battery. It contains poisonous and corrosive sulfuric acid.**
- **Do not get under your vehicle with just the body jack supporting it. Always use automotive jack stands or other solid supports.**
- **Use eye protection whenever you work on or under your vehicle where you may be exposed to flying or falling material, fluid spray, etc.**

NOTICE

- ***Remember that battery and ignition cables carry high currents or voltages. Be careful of accidentally causing a short circuit.***
- ***Before closing the engine hood, check to see that you have not forgotten any tools, rags, etc.***
- ***Do not drive with the air cleaner removed, or excessive engine wear could result. Also backfiring could cause a fire in the engine compartment.***
- ***Do not overfill automatic transmission fluid, transfer oil and power steering fluid, or the transmission, transfer and power steering could be damaged.***
- ***Be careful not to scratch the glass surface with the wiper frame.***

PARTS AND TOOLS

Here is a list of parts and tools you will need to perform do–it–yourself maintenance. Remember all Lexus parts are designed in metric sizes, so your tools must be metric.

Checking the engine oil level

Parts (if level is low):

- API SH, Energy–Conserving II multigrade engine oil or ILSAC multigrade engine oil. For recommended oil viscosity, see page 204.

Tools:

- Rag or paper towel
- Funnel (only for adding oil)

Checking the engine coolant level

Parts (if level is low):

- Ethylene–glycol coolant
- Demineralized or distilled water

Tools:

- Funnel (only for adding coolant)

Checking brake fluid

Parts (if level is low):

- FMVSS No. 116 DOT 3 or SAE J1703 brake fluid

Tools:

- Rag or paper towel
- Funnel (only for adding fluid)

Checking power steering fluid

Parts (if level is low):

- Automatic transmission fluid DEXRON®–II or III

Tools:

- Rag or paper towel
- Funnel (only for adding fluid)

Checking battery condition

Non–maintenance batteries

Tools:

- Warm water
- Baking soda
- Grease
- Conventional wrench (for terminal clamp bolts)

Maintenance type batteries

Parts (if level is low):

- Distilled water

Tools:

- Warm water
- Baking soda
- Grease
- Conventional wrench (for terminal clamp bolts)
- Coin (for vent plugs)
- Funnel (only for adding distilled water)

Checking and replacing the blade type fuses

Parts (if replacement is necessary):

- Fuse with same amperage rating as original

Checking the cartridge type fuses

Parts (if replacement is necessary):

- Genuine Lexus fuse or equivalent with same amperage rating as original

Checking the fusible links

Parts (if replacement is necessary):

- Genuine Lexus fusible link or equivalent with same amperage rating as original

Adding washer fluid

Parts:

- Water
- Washer fluid containing antifreeze (for winter use)

Tools:

- Funnel

SERVICE PROCEDURES AND SPECIFICATIONS

Engine

Specifications ---------- 198
Fuel ---------- 200
Facts about engine oil consumption ---------- 201
Used engine oil ---------- 202
Checking the engine oil level ---------- 203
Checking the engine coolant level ---------- 205

SPECIFICATIONS

– GENERAL

Model	1FZ–FE
Type	6 cylinder in line, 4 cycle, gasoline
Bore and stroke	100.0 X 95.0 mm (3.94 X 3.74 in.)
Displacement	4477 cm^3 (273.1 cu. in.)
Valve clearance (engine cold)	
Intake	0.15 – 0.25 mm (0.006 – 0.010 in.)
Exhaust	0.25 – 0.35 mm (0.010 – 0.014 in.)
Drive belt tension (with Borroughs drive belt tension gauge No. BT–33–73F)	115 $\pm$ 20 lb.

– LUBRICATION SYSTEM

Oil capacity	
Drain and refill	
with filter	7.4 L (7.8 qt., 6.5 Imp. qt.)
without filter	6.9 L (7.3 qt., 6.1 Imp. qt.)
Oil grade	API SH, Energy–Conserving II multigrade engine oil or ILSAC multigrade engine oil
Recommended oil viscosity (SAE):	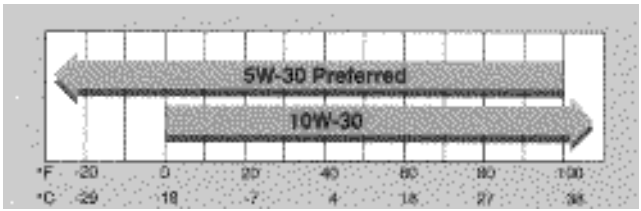 Temperature range anticipated before next oil change

– COOLING SYSTEM

Capacity	
With front heater	12.5 L (13.2 qt., 11.0 Imp. qt.)
With front and rear heater	13.4 L (14.2 qt., 11.8 Imp. qt.)
Coolant type	Ethylene – glycol antifreeze (Do not use alcohol type.)

– FUEL

Fuel type	Only UNLEADED
Research octane number	91 (Octane Rating 87) or higher

– IGNITION SYSTEM

Spark plug	– Make	NIPPONDENSO	K16R–U
		NGK	BKR5EYA
	– Gap		0.8 mm (0.031 in.)

– ELECTRICAL SYSTEM

Battery–	Maintenance type battery		
	Specific gravity reading at 20°C (68°F):		1.280 Fully charged
			1.180 Half charged
			1.080 Discharged
	Charging rates	Quick charge	15A max.
		Slow charge	5A max.
	– Non–maintenance battery		
	Open voltage at 20°C (68°F):		12.7V Fully charged
			12.3V Half charged
			11.9V Discharged
			[Voltage that is checked 20 minutes after the key is removed with all the lights turned off]
	Charging rates		5A max.

FUEL

Fuel type

Your vehicle must use only unleaded gasoline.

To help prevent gas station mix–ups, your Lexus has a smaller fuel tank opening. The special nozzle on pumps with unleaded fuel will fit it, but the larger nozzle on pumps with leaded gas will not.

NOTICE

Do not use leaded gasoline. Use of leaded gasoline will cause the three–way catalytic converter to lose its effectiveness and the emission control system to function improperly. Also, this can increase maintenance costs.

Octane number

Select Research Octane Number 91 (Octane Rating 87) or higher.

Use of unleaded fuel with an octane number or rating lower than stated above will cause persistent heavy knocking. If severe, this will lead to engine damage.

If your engine knocks...

If you detect heavy knocking even when using the recommended fuel, or if you hear steady knocking while holding a steady speed on level roads, consult your Lexus dealer.

However, now and then, you may notice light knocking for a short time while accelerating or driving up hills. This is no cause for concern.

Gasolines containing detergent additives

Lexus recommends use of gasolines that contain detergent additives to avoid build–up of engine deposits.

For further details, ask your Lexus dealer or a local gasoline retailer.

Gasolines containing MTBE

Gasolines that contain MTBE (Methyl Tertiary–Butyl Ether) are available in the market. If you use a gasoline mixed with MTBE, make certain that it does not contain more than 15% of MTBE.

If the use of gasolines containing MTBE causes poor driveability and/or poor fuel economy, you should stop using them.

Gasolines containing alcohol

Gasohol is a mixture of gasoline and ethanol. If you use gasohol in your Lexus, be sure that it is unleaded, has an octane rating no lower than 87 and does not contain more than 10% ethanol. Lexus does not recommend the use of gasolines containing methanol.

If you use gasoline containing methanol, use only gasoline meeting the requirements above and also containing less than 5% methanol with cosolvents and corrosion inhibitors for methanol.

NOTICE

- ***Do not use gasohol other than stated above. It will cause fuel system damage or vehicle performance problems.***
- ***If driveability problems are encountered (poor hot starting, vaporizing, engine knock, etc.), discontinue its use.***
- ***Take care not to spill gasohol during refueling. Gasohol may cause paint damage.***

Fuel tank capacity

95 L (25.1 gal., 20.9 Imp. gal.)

FACTS ABOUT ENGINE OIL CONSUMPTION

Functions of engine oil

Engine oil has the primary function of lubricating and cooling the inside of the engine, and plays a major role in maintaining the engine in proper working order.

Engine oil consumption

It is normal that an engine should consume some engine oil during normal engine operation. The causes of oil consumption in a normal engine are as follows.

- Oil is used to lubricate pistons, piston rings and cylinders. A thin film of oil is left on the cylinder wall when a piston moves downwards in the cylinder. High negative pressure generated when the vehicle is decelerating sucks some of this oil into the combustion chamber. This oil as well as some part of the oil film left on the cylinder wall is burned by the high temperature combustion gases during the combustion process.
- Oil is also used to lubricate the stems of the intake valves. Some of this oil is sucked into the combustion chamber together with the intake air and is burned along with the fuel. High temperature exhaust gases also burn the oil used to lubricate the exhaust valve stems.

The amount of engine oil consumed depends on the viscosity of the oil, the quality of the oil and the way the vehicle is driven.

More oil is consumed by high–speed driving and frequent acceleration and deceleration.

A new engine consumes more oil, since its pistons, piston rings and cylinder walls have not become conditioned.

When judging the amount of oil consumption, keep in mind that the oil may have become diluted, making it difficult to judge the true level accurately.

For example, if a vehicle is used for repeated short trips and consumes a normal amount of oil, the dipstick may not show any drop in the oil level at all, even after 1000 km (600 miles) or more. This is because the oil is gradually becoming diluted with fuel or moisture, making it appear that the oil level has not changed.

The diluting ingredients evaporate out when the vehicle is then driven at high speeds, as on an expressway, making it appear that oil is excessively consumed after driving at high speeds.

Importance of engine oil level check

One of the most important points in proper vehicle maintenance is to keep the engine oil at the optimum level so that oil function will not be impaired. Therefore, it is essential that the oil level be checked regularly. Lexus recommends that the oil level be checked every time you refuel the vehicle.

NOTICE

Failure to check the oil level regularly could lead to serious engine trouble due to insufficient oil.

For detailed information on oil level check, see “Checking the engine oil level” on page 203.

USED ENGINE OIL

CAUTION

- **Used engine oil contains potentially harmful contaminants which may cause skin disorders such as inflammation or skin cancer, so care should be taken to avoid prolonged and repeated contact with it. To remove used engine oil from your skin, wash thoroughly with soap and water.**
- **Do not leave used oil within the reach of children.**
- **Dispose of used oil and used oil filters only in a safe and acceptable manner. Do not dispose of used oil and used oil filters in household trash, in sewers or onto the ground. Call your Lexus dealer or a service station for information concerning recycling or disposal.**

CHECKING THE ENGINE OIL LEVEL

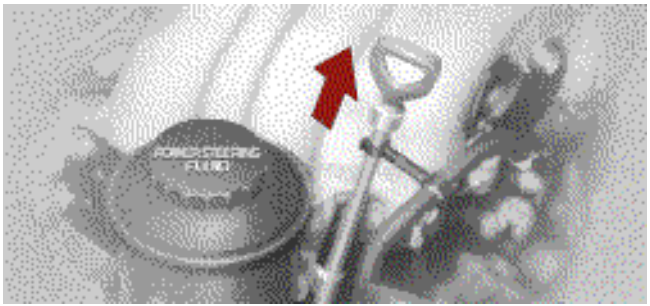

With the engine at operating temperature and turned off, check the oil level on the dipstick.

1. To get a true reading, the vehicle should be on a level spot. After turning off the engine, wait a few minutes for the oil to drain back into the bottom of the engine.
2. Pull out the dipstick, and wipe it clean with a rag.
3. Reinsert the dipstick and push it in as far as it will go, or the reading will not be correct.

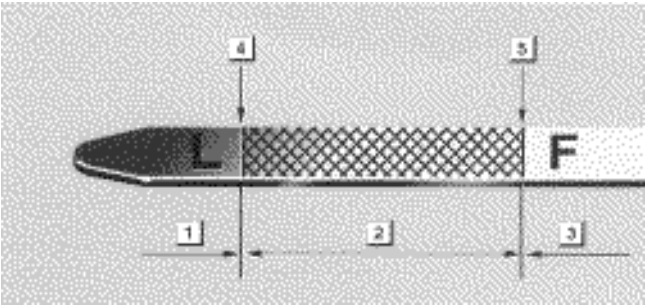

▶ 1 ***Add oil*** 2 ***O.K.*** 3 ***Too full***

4. Pull the dipstick out and look at the oil level on the end. If it is between the full line (5) and the low line (4), it is O.K.

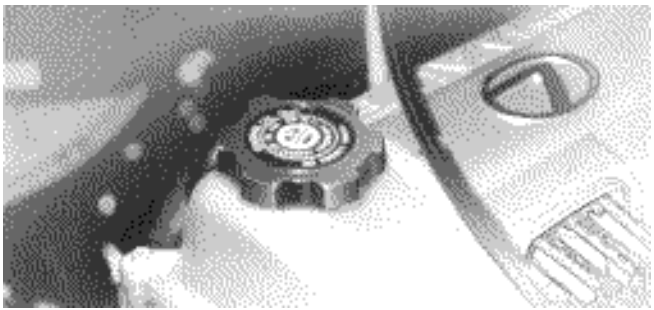

If the oil level is below or only slightly above the low line, add engine oil of the same type as already in the engine.

Remove the oil filler cap and add engine oil a little at a time, checking the dipstick. The approximate quantity of oil needed to fill between the low line and the full line on the dipstick is indicated below for reference.

When the level reaches within the correct range, return the filler cap and turn the cap clockwise until you hear a click.

Oil quantity. L (qt., Imp. qt.) 1.5 (1.6, 1.3)

NOTICE

Avoid overfilling, or the engine could be damaged. Check the oil level on the dipstick once again after adding the oil.

Engine oil selection

Use API SH, Energy–Conserving II multigrade engine oil or ILSAC multigrade engine oil.

Recommended viscosity (SAE):

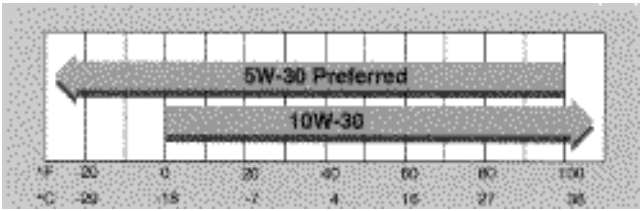

Temperature range anticipated before next oil change

SAE 5W–30 is the best choice for your vehicle, for good fuel economy, and good starting in cold weather.

If you use SAE 10W–30 engine oil in extremely low temperatures, the engine may become difficult to start, so SAE 5W–30 engine oil is recommended.

Oil identification marks

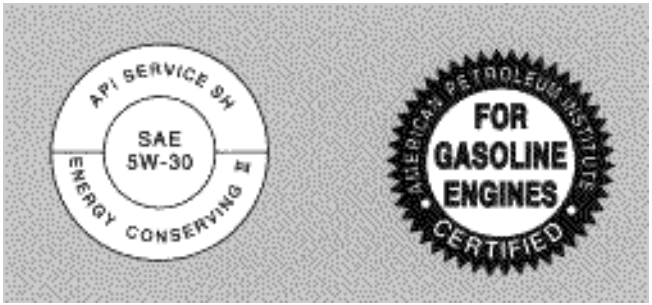

▶ ***API Service Symbol*** ▶ ***ILSAC Certification Mark***

Either or both API registered marks are added to some oil containers to help you select the oil you should use.

- The API Service Symbol is located anywhere on the outside of the container.
  The top portion of the label shows the oil quality by API (American Petroleum Institute) designation such as SH. The center portion of the label shows the SAE viscosity grade such as SAE 5W–30. “Energy–Conserving II,” shown in the lower portion, indicates that the oil has fuel–saving capabilities. Oils marked “Energy–Conserving II” will have higher fuel–saving capabilities than oils marked “Energy–Conserving.”
- The ILSAC (International Lubricant Standardization and Approval Committee) Certification Mark is displayed on the front of the container.

CHECKING THE ENGINE COOLANT LEVEL

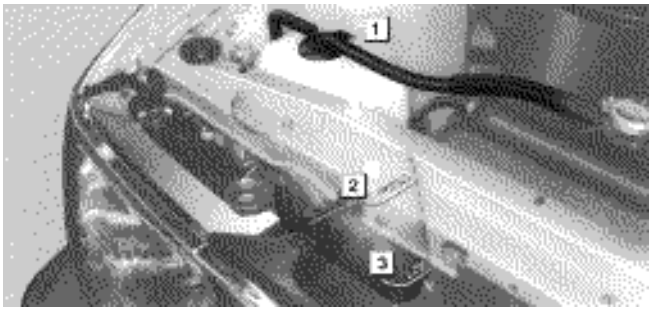

▶ 1 ***Reservoir cap*** 2 ***Upper line*** 3 ***Lower Line***

Park the vehicle at a level spot and look at the see–through coolant reservoir when the engine is cool. The coolant level is satisfactory if it is between the upper and lower lines on the tank. If the level is low, add ethylene–glycol type coolant.

The coolant level in the reservoir will vary with the engine coolant temperature. However, if the level is on or below the lower line, add coolant to bring the level up to the upper line.

Use only ethylene–glycol type coolant. It will prevent freezing and corrosion. Neither supplemental inhibitors nor additives are needed nor recommended. (For information on ethylene–glycol coolant, see also “Engine coolant selection” described below.)

If the coolant level drops within a short time after replenishing, there may be a leak in the system. Visually check the radiator, hoses, reservoir cap, drain cock and water pump.

If you can find no leak, have your Lexus dealer test the cap pressure and check for leaks in the cooling system.

CAUTION

To prevent burning yourself, do not remove the reservoir cap when the engine is hot.

Engine coolant selection

Your coolant must contain ethylene–glycol antifreeze. In addition to preventing freezing and subsequent damage to the engine, this will also prevent corrosion. Further supplemental inhibitors or additives are neither needed nor recommended.

Read the antifreeze container for information on freeze protection. Follow the manufacturer's directions for how much to mix with water. The total capacity of the cooling system is given on page 199. We recommend 50% solution be used for your Lexus, or a sufficient quantity to provide protection to about –35°C (–31°F).

NOTICE

Do not use alcohol type antifreeze or plain water alone.

SERVICE PROCEDURES AND SPECIFICATIONS

Chassis

Specifications ---------- 208
Checking brake fluid ---------- 211
Checking power steering fluid ---------- 212
Checking tire pressure ---------- 213
Rotating tires ---------- 214
Checking and replacing tires ---------- 215
Installing snow tires and chains ---------- 217
Replacing wheels ---------- 218
Aluminum wheel precautions ---------- 219

SPECIFICATIONS

– TRANSFER

Oil capacity	1.7 L (1.8 qt., 1.4 Imp. qt.)
Oil type	Multipurpose gear oil API GL–4 or GL–5
Recommended oil viscosity	SAE 75W–90

– AUTOMATIC TRANSMISSION

Fluid capacity	
Drain and refill	Up to 2.0 L (2.1 qt., 1.8 Imp. qt.)
Fluid type	Automatic transmission fluid DEXRON®–II

– DIFFERENTIAL

Oil capacity	
Front	
With front and rear differential lock system	2.65 L (2.8 qt., 2.3 Imp. qt.)
Without front and rear differential lock system	2.80 L (3.0 qt., 2.5 Imp. qt.)
Rear	3.25 L (3.4 qt., 2.9 Imp. qt.)
Oil type	Hypoid gear oil API GL–5
Oil viscosity	Above –18°C (0°F): SAE 90
	Below –18°C (0°F): SAE 80W or SAE 80W–90

– BRAKES

Pedal clearance	68 mm (2.7 in.) Min.
Pedal freeplay	3 – 6 mm (0.12 – 0.24 in.)
Brake pad wear limit	1.0 mm (0.04 in.)
Parking brake lining wear limit	1.0 mm (0.04 in.)
Parking brake adjustment	7 – 9 clicks
Fluid type	SAE J1703 or FMVSS No. 116 DOT 3

– CHASSIS LUBRICATION

Wheel bearings	Lithium base wheel bearing grease, NLGI No. 2
Steering knuckles	Molybdenum–disulfide lithium base chassis grease, NLGI No. 2
Propeller shafts	Lithium base wheel bearing grease, NLGI No. 2

– STEERING

Freeplay	Less than 40 mm (1.6 in.)
Power steering fluid	Automatic transmission fluid DEXRON®–II or III

– TIRES AND WHEELS

Tire size	P275/70R16 114H
Tire inflation pressure	
Recommended cold tire inflation pressure	
Vehicle load up to four occupants	Front 220 kPa (2.2 kgf/cm^2 or bar, 32 psi) Rear 220 kPa (2.2 kgf/cm^2 or bar, 32 psi)
Vehicle loaded up to vehicle capacity weight	Front 220 kPa (2.2 kgf/cm^2 or bar, 32 psi) Rear 220 kPa (2.2 kgf/cm^2 or bar, 32 psi) For sustained high speeds above 160 km/h (100 mph), in countries where such speeds are permitted by law, add 80 kPa (0.9 kgf/cm^2, 0.8 bar, 12 psi) to the front tires and rear tires, but never exceed the maximum cold tire pressure molded on the tire sidewall.
Wheel size	16 x 8 JJ
Wheel nut torque	103 N·m (10.5 kgf·m, 76 ft·lbf.)

CHECKING BRAKE FLUID

To check the fluid level, simply look at the see–through reservoir. The level should be between the “MAX” and “MIN” lines on the tank.

It is normal for the brake fluid level to go down slightly as the brake pads wear. So be sure to keep the reservoir filled.

If the reservoir needs frequent refilling, it may indicate a serious mechanical problem.

If the level is low, add SAE J1703 or FMVSS No. 116 DOT 3 brake fluid to the brake reservoir.

Remove and replace the reservoir cover by hand. Add brake fluid up to the “MAX” line.

Use only newly opened brake fluid. Once opened, brake fluid absorbs moisture from the air, and excess moisture can cause a dangerous loss of braking efficiency.

CAUTION

Take care when filling the reservoir because brake fluid can harm your eyes and damage painted surfaces. If fluid gets in your eyes, flush your eyes with clean water.

NOTICE

If you spill some of the fluid, be sure to wash it off with water to prevent it from damaging the parts or paintwork.

CHECKING POWER STEERING FLUID

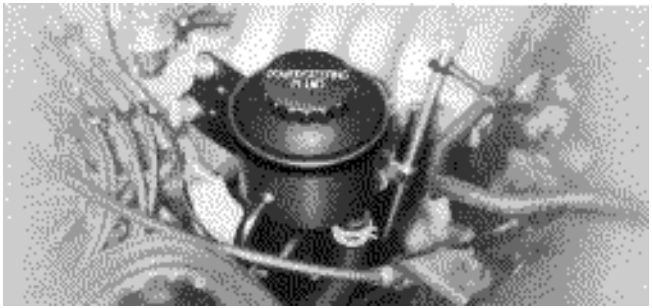

Check the fluid level on the dipstick. If necessary, add automatic transmission fluid DEXRON®–II or III.

If the vehicle has been driven around 80 km/h (50 mph) for 20 minutes (a little more in frigid temperatures), the fluid is hot (60°C–80°C or 140°F–175°F). You may also check the level when the fluid is cold (about room temperature, 10°C–30°C or 50°F–85°F) if the engine has not been run for about five hours.

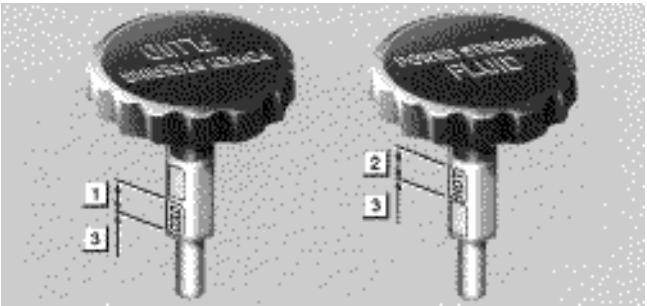

▶ 1 ***If cold O.K.*** 2 ***If hot O.K.*** 3 ***Add fluid***

1. Clean all the dirt off the reservoir.
2. Remove the filler cap by turning it counterclockwise and wipe the dipstick clean.
3. Reinstall the filler cap.
4. Remove the filler cap again and look at the fluid level. If the fluid is cold, the level should be in the “COLD” range on the dipstick. Similarly, if it is hot, the fluid level should be in the “HOT” range. If the level is at the low side of either range, add automatic transmission fluid DEXRON®–II or III to bring the level within the range.
5. After replacing the filler cap, visually check the steering box case, vane pump and hose connections for leaks or damage.

CAUTION

The reservoir may be hot so be careful not to burn yourself.

NOTICE

- ***Avoid overfilling, or the power steering could be damaged.***
- ***When adding the power steering fluid, avoid spilling it. The generator under the power steering reservoir could be damaged if fluid is spilled on it.***

CHECKING TIRE PRESSURE

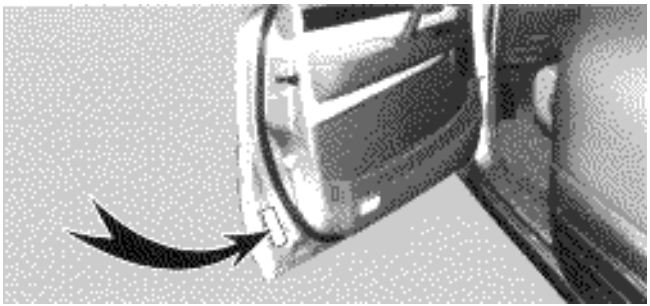

The recommended cold tire pressures, tire size and the vehicle capacity weight are given on the label.

You should check the tire pressures every two weeks, or at least once a month. And don't forget the spare! The pressure for the spare tire should be 220 kPa (2.2 kgf/cm^2 or bar, 32 psi). Incorrect tire pressure can reduce tire life and make your vehicle less safe to drive.

Low tire pressure results in excessive wear, poor handling, reduced fuel economy, and the possibility of blowouts from overheated tires. Also, low tire pressure can cause poor sealing of the tire bead. If the tire pressure is excessively low, there is the possibility of wheel deformation and/or tire separation. So keep your tire pressures at the proper level. If a tire needs frequent refilling, have it checked by your Lexus dealer.

High tire pressure produces a harsh ride, handling problems, excessive wear at the center of the tire tread, and a greater possibility of tire damage from road hazards.

The following instructions for checking tire pressure should be observed:

- **The pressure should be checked only when the tires are cold.** If your vehicle has been parked for at least 3 hours and has not been driven for more than 1.5 km or 1 mile since, you will get an accurate cold tire pressure reading.
- **Always use a tire pressure gauge.** The appearance of the tire can be misleading. Besides, tire pressures that are even just a few pounds off can degrade handling and ride.
- **Do not bleed or reduce tire pressure after driving.** It is normal for the tire pressure to be higher after driving.
- **Never exceed the vehicle capacity weight.** The passengers and luggage weight should be located so that the vehicle is balanced.
- **Be sure to reinstall the tire valve caps.** Without the valve caps, dirt or moisture could get into the valve core and cause air leakage. If the caps have been lost, have new ones put on as soon as possible.

ROTATING TIRES

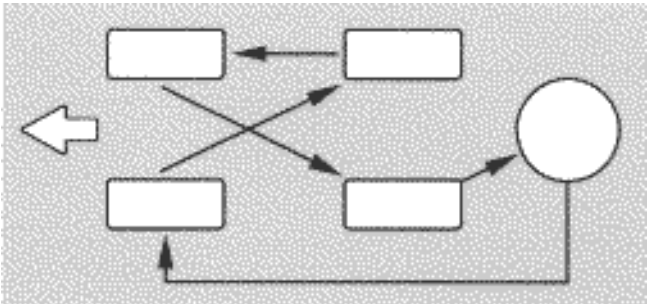

To equalize tire wear and help extend tire life, Lexus recommends that you rotate your tires approximately every 5000 km (3000 miles). However, the most appropriate timing for tire rotation may vary according to your driving habits and road surface conditions.

The wheel assemblies must be rotated as illustrated above.

When rotating tires, check for uneven wear and damage. Abnormal wear is usually caused by incorrect tire pressure, improper wheel alignment, out–of–balance wheels, or severe braking.

Before storing radial, snow or studded tires, mark the direction of rotation and be sure to install them in the same direction when using them again. Tires should be stored in a cool dry place.

CHECKING AND REPLACING TIRES

When to replace your tires

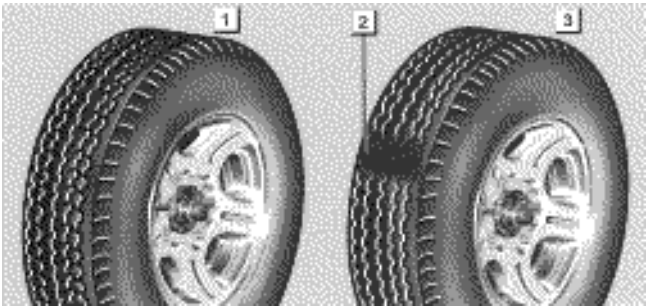

▶ 1 ***New tread*** 2 ***Tread wear indicator***
3 ***Worn tread***

Replace the tires when the tread wear indicators show. The location of the tread wear indicators is shown by the marks molded on the sidewall of each tire.

The tires on your Lexus have built–in tread wear indicators to help you know when the tires need replacement. When the tread depth wears to 1.6 mm (0.06 in.) or less, the indicators will appear. If you can see the indicators in two or more adjacent grooves, the tire should be replaced.

The effectiveness of snow tires is lost if the tread wears down below 4 mm (0.16 in.).

If you have tire damage such as cuts, splits, cracks deep enough to expose the fabric, or bulges indicating internal damage, the tire should be replaced.

If a tire often goes flat or cannot be properly repaired due to the size or location of a cut or other damage, it should be replaced. If you are not sure, consult with your Lexus dealer.

If an air loss occurs while driving, do not continue driving with a deflated tire. Driving even a short distance can damage a tire beyond repair.

Any tires which are over 6 years old must be checked by a qualified technician even if damage is not obvious.

Tires deteriorate with age even if they have never or seldom been used.

This also applies to the spare tire and tires stored for future use.

Uniform tire quality grading

This information has been prepared in accordance with regulations issued by the National Highway Traffic Safety Administration of the U.S. Department of Transportation. It provides the purchasers and/or prospective purchasers of Lexus vehicles with information on uniform tire quality grading.

You Lexus dealer will help answer any questions you may have as you read this information.

DOT quality grades – All passenger vehicle tires must conform to Federal Safety Requirements in addition to these grades. These quality grades are molded on the sidewall.

Treadwear – The treadwear grade is a comparative rating based on the wear rate of the tire when tested under controlled conditions on a specified government test course. For example, a tire graded 150 would wear one and a half (1–1/2) times as well on the government course as a tire graded 100. The relative performance of tires depends upon the actual conditions of their use, however, and may depart significantly from the norm due to variations in driving habits, service practices and differences in road characteristics and climate.

Traction A, B, C – The traction grades from highest to lowest, are A, B and C, and they represent the tire's ability to stop on wet pavement as measured under controlled conditions on specified government test surfaces of asphalt and concrete. A tire marked C may have poor traction performance.

Warning: The traction grade assigned to this tire is based on braking (straight ahead) traction tests and does not include cornering (turning) traction.

Temperature A, B, C – The temperature grades are A (the highest), B, and C, representing the tire's resistance to the generation of heat and its ability to dissipate heat when tested under controlled conditions on a specified indoor laboratory test wheel. Sustained high temperature can cause the material of the tire to degenerate and reduce tire life, and excessive temperature can lead to sudden tire failure. The grade C corresponds to a level of performance which all passenger car tires must meet under the Federal Motor Vehicle Safety Standard No. 109. Grades B and A represent higher levels of performance on the laboratory test wheel than the minimum required by law.

Warning: The temperature grades for this tire are established for a tire that is properly inflated and not overloaded. Excessive speed, underinflation, or excessive loading, either separately or in combination, can cause heat buildup and possible tire failure.

Tire selection

When replacing a tire, use only the same size and construction as originally installed and with the same or greater load capacity.

Using any other size or type of tire may seriously affect handling, ride, speedometer/odometer calibration, ground clearance, and clearance between the body and tires or snow chains.

Do not mix radial, belted, or conventional tires on your vehicle.

It can cause dangerous handling characteristics, resulting in loss of control. If you need to change from conventional tires to radial tires or vice versa, replace them as a set.

INSTALLING SNOW TIRES AND CHAINS

When to use snow tires or chains

Snow tires or chains are recommended when driving on snow or ice.

On wet or dry roads, conventional or radial tires provide better traction than snow or studded tires.

Snow tire selection

If you need snow tires, select the same size, construction and load capacity as the original tires on your Lexus.

Do not use tires other than stated above. Since your vehicle has radial tires as original equipment, make sure your snow tires also have radial construction. Do not install studded tires without first checking local regulations for possible restrictions.

Snow tire installation

Snow tires should be installed on all wheels.

Installing snow tires on the rear wheels only can lead to an excessive difference in road grip capability between the front and rear tires which could cause loss of vehicle control.

CAUTION

- **Do not drive with the snow tires incorrectly inflated.**
- **Never drive over 105 km/h (65 mph) with any type of snow tires.**

Tire chain selection

Regulations regarding the use of tire chains vary according to location or type of road. Always check the local regulations before installing chains.

Use SAE Class “S” type radial tire chains, with the exception of radial cable chains or V–bar type chains.

Chain installation

Install the chains on the rear tires as tightly as possible. Do not use tire chains on the front tires. Retighten chains after driving 0.5 – 1.0 km (1/4 – 1/2 mile).

When installing chains on your tires, carefully follow the instructions of the chain manufacturer.

If wheel covers are used, they will be scratched by the chain band, so remove the covers before putting on the chains.

CAUTION

- **Do not exceed 50 km/h (30 mph) or the chain manufacturer’s recommended speed limit, whichever is lower.**
- **Drive carefully avoiding bumps, holes, and sharp turns, which may cause the vehicle to bounce.**
- **Avoid sharp turns or locked–wheel braking, as use of chains may adversely affect vehicle handling.**

REPLACING WHEELS

When to replace your wheels

If you have wheel damage such as bending, cracks or heavy corrosion, the wheel should be replaced.

If you fail to replace damaged wheels, a tire may slip off a wheel or they may cause loss of handling control.

Replacement with used wheels is not recommended as they may have been subjected to rough treatment or high mileage and could fail without warning. Also, bent wheels which have been straightened may have hidden structural damage and therefore should not be used. Never use an inner tube in a leaking wheel which is designed for a tubeless tire.

Wheel selection

When replacing wheels, care should be taken to ensure that they are equivalent to those removed in load capacity, diameter, rim width, and offset.

Correct replacement wheels are available at your Lexus dealer.

A wheel of a different size or type may adversely affect handling, wheel and bearing life, brake cooling, speedometer/odometer calibration, stopping ability, headlight aim, bumper height, vehicle ground clearance, and tire or snow chain clearance to the body and chassis.

ALUMINUM WHEEL PRECAUTIONS

- After driving your vehicle the first 1600 km (1000 miles), check that the wheel nuts are tight.
- If you have rotated, repaired, or changed your tires, check that the wheel nuts are still tight after driving 1600 km (1000 miles).
- When using tire chains, be careful not to damage the aluminum wheels.
- Use only the Lexus wheel nuts and wrench designed for your aluminum wheels.
- When balancing your wheels, use only Lexus balance weights or equivalent and a plastic or rubber hammer.
- As with any wheel, periodically check your aluminum wheels for damage. If damaged, replace immediately.

SERVICE PROCEDURES AND SPECIFICATIONS

Electrical components

Specifications ---------- 222
Checking battery condition ---------- 224
Battery recharging precautions ---------- 229
Checking and replacing the blade type fuses -------- 229
Checking the cartridge type fuses ---------- 231
Checking the fusible links ---------- 232
Adding washer fluid ---------- 233
Checking the headlight aim ---------- 233
Replacing light bulbs ---------- 235

SPECIFICATIONS

– FUSE LOCATIONS

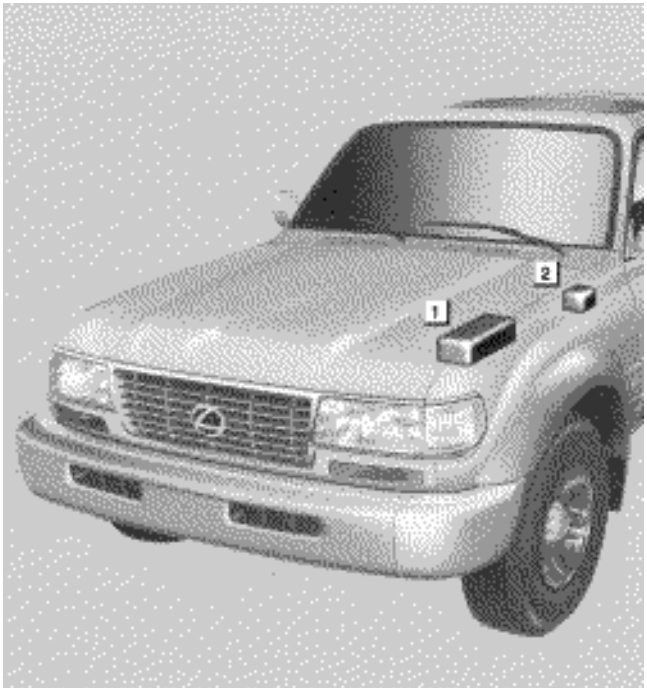

▶ 1 *Engine compartment*
2 *Driver's side instrument panel*

– FUSES

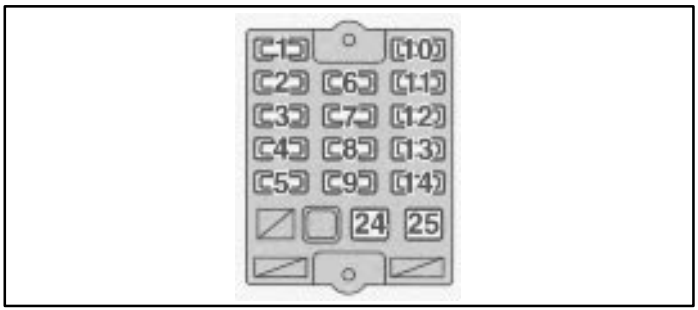

▶ *Driver's side instrument panel*

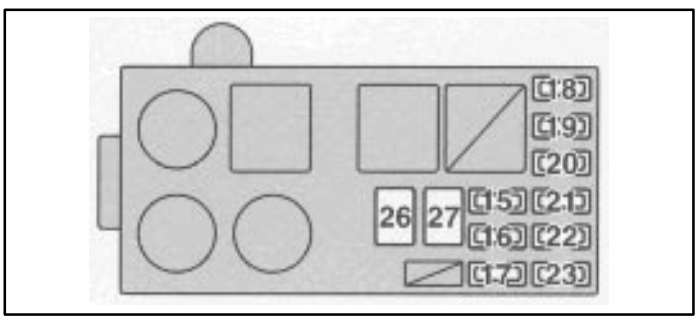

▶ *Engine compartment*

No.	Fuse	AMPERE	CIRCUIT
1	CIG	15	Cigarette lighter, Power rear view mirrors, Digital clock display, Radio, Cassette tape player, Power antenna, Automatic transmission shift lock system, SRS airbag system
2	TAIL	15	Tail lights, License plate lights, Parking and front side marker lights, Instrument panel lights, Clock, Glovebox light
3	OBD	15	On–board diagnosis system
4	STOP	10	Stop lights, Multiport fuel injection system/sequential multiport fuel injection system, Cruise control cancel device, Automatic transmission shift lock system
5	DEFOG	20	Rear window defogger
6	WIPER	20	Windshield wipers and washer, Rear window wiper and washer
7	GAUGE	10	Gauges and meters, Service reminder indicators and warning buzzers (except discharge and open door warning lights), Back–up lights
8	TURN	7.5	Turn signal lights
9	ECU–IG	15	Cruise control system
10	ECU–B	10	SRS airbag system
11	REAR–HTR	20	Air conditioning system
12	IGN	7.5	Multiport fuel injection system/sequential multiport fuel injection system, Emission control system, SRS airbag system
13	A.C	10	Air conditioning system
14	DIFF	30	Differential lock system
15	CHARGE	7.5	Charging system, Discharge warning light
16	EFI	15	Multiport fuel injection system/sequential multiport fuel injection system
17	CDS–FAN	20	No circuit
18	HEAD (RH)	15	Right–hand headlights
19	HEAD (LH)	15	Left–hand headlights
20	RADIO	20	Audio system
21	TEL	15	Telephone
22	HAZ–HORN	15	Emergency flashers, Horns

No.	Fuse	AMPERE	CIRCUIT
23	DOME	10	Interior lights, Personal light, Luggage compartment light, Ignition switch light, Open door warning light, Clock, Radio, Cassette tape player, Power antenna, Vanity lights
24	FL HEATER	40	Air conditioning system
25	FL POWER	30	Power windows, Power door lock system, Electric moon roof
26	AM 1	50	All components in “CIG”, “WIPER”, “GAUGE”, “TURN”, “ECU–IG”, “REAR–HTR”, “IGN”, “DIFF” and “FL POWER” circuits
27	ABS	60	Anti–lock brake system

CHECKING BATTERY CONDITION

Precautions

CAUTION

BATTERY PRECAUTIONS

The battery produces flammable and explosive hydrogen gas.

- **Do not cause a spark by contacting the battery terminals with tools.**
- **Do not smoke or light a match near the battery.**

The electrolyte contains poisonous and corrosive sulfuric acid.

- **Avoid contact with eyes, skin or clothes.**
- **Never inhale or swallow electrolyte.**
- **Wear protective safety glasses when working near the battery.**
- **Keep children away from the battery.**

EMERGENCY MEASURES

- **If electrolyte gets in your eyes, flush your eyes with clean water for at least 15 minutes and get immediate medical attention. If possible, continue to apply water with a sponge or cloth while traveling to the medical office.**

- **If electrolyte gets on your skin, thoroughly wash the contacted area. If you feel a pain or burn, get medical attention immediately.**
- **If electrolyte gets on your clothes, there is a possibility of its soaking through to your skin, so immediately take off the exposed clothing and follow the procedure above, if necessary.**
- **If you happen to swallow electrolyte, drink a large quantity of water or milk. Follow with milk of magnesia, beaten raw egg or vegetable oil. Then go immediately for emergency help.**

Checking battery exterior

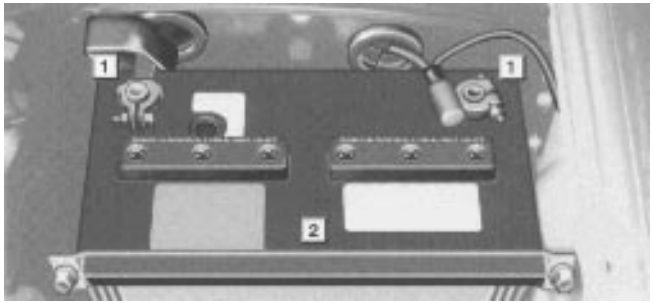

▶ 1 ***Terminals*** 2 ***Hold–down clamp***

Check the battery for corroded or loose connections, cracks, or loose hold–down clamps.

1. If the battery is corroded, wash it off with a solution of warm water and baking soda. Coat the terminals with grease to prevent further corrosion.
2. If the connections are loose, tighten the clamp bolts – but do not overtighten.
3. Tighten the hold–down clamp only enough to keep the battery firmly in place. Overtightening may damage the battery case.

NOTICE

- ***Make sure the engine and all accessories are turned off before performing maintenance.***
- ***When checking the battery, remove the ground cable first and reinstall it last.***
- ***Be careful not to cause a short circuit with tools.***
- ***Take care no solution gets into the battery when washing it.***

Checking battery fluid

There are 2 types of batteries: maintenance type and non–maintenance type.

A non–maintenance battery has “MAINTENANCE FREE BATTERY” on its top. A maintenance type battery does not have such indication.

Maintenance type battery

Check the fluid condition by the fluid level lines on the side of the battery. Or if the battery has a hydrometer on its top, you can also check the hydrometer.

Non–maintenance battery

Check the battery condition by the hydrometer on top of the battery.

(a) Checking by the fluid level lines (Maintenance type battery only)

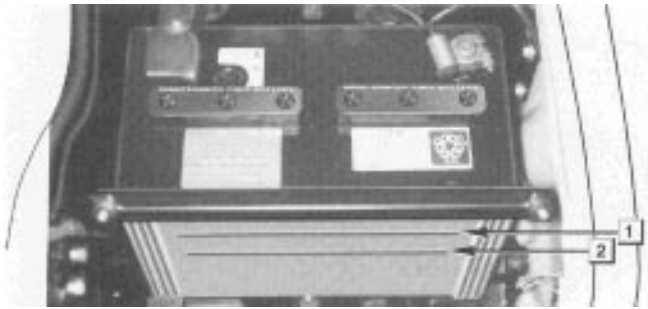

▶ 1 ***Upper line*** 2 ***Lower line***

The fluid (electrolyte) level must be between the upper and lower lines.

When checking the fluid level, look at all six cells, not just one or two.

If the level is lower than the lower line, add distilled water. (See “Adding distilled water” on page 228.)

(b) Checking by the hydrometer

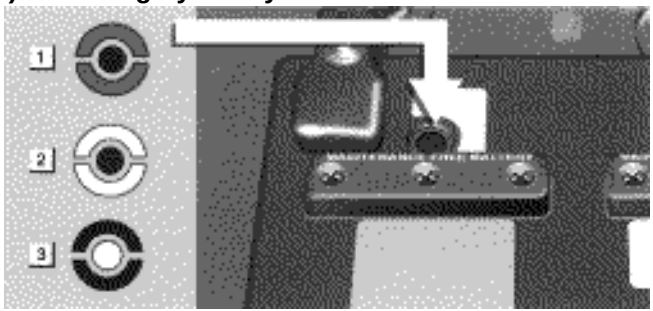

Check the battery condition by the hydrometer color.

Maintenance type battery

1 BLUE – Good condition

2 WHITE – Charging necessary. Have the battery checked by your Lexus dealer.

3 RED – Add distilled water. (See “Adding distilled water” on page 228.)

Non–maintenance type battery

1 BLUE – Good condition.

2 WHITE – Charging necessary. Have the battery checked by your Lexus dealer.

3 RED – Have the battery checked by your Lexus dealer.

NOTICE

(For non–maintenance type battery):
Do not refill the battery with water.

Adding distilled water (Maintenance type battery only)

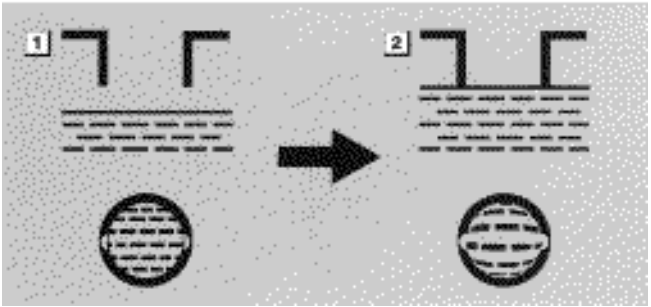

▶ 1 ***Low*** 2 ***O.K.***

1. Remove the vent plugs.
2. Add distilled water to cells needing fluid.

If the side of the battery is covered, check the water level by looking down directly above the cell as illustrated above.

3. Retighten the vent plugs securely.

NOTICE

- ***Do not overfill the cells. Excess electrolyte could squirt out of the battery during heavy charging, causing corrosion or damage.***
- ***Use a cover on the battery for longer life.***

BATTERY RECHARGING PRECAUTIONS

During recharging, the battery is producing hydrogen gas.

Therefore, before recharging:

1. Maintenance type batteries – Remove the vent plugs.
2. If recharging with the battery installed on the vehicle, be sure to disconnect the ground cable.
3. Make sure the power switch on the recharger is off when connecting the charger cables to the battery and when disconnecting them.

CAUTION

- **Always charge the battery in an unconfined area. Do not charge the battery in a garage or closed room where there is not sufficient ventilation.**
- **Non–maintenance batteries: Only do a slow charge (5A or less). Charging at a quicker rate is dangerous. The battery may explode causing personal injuries. Maintenance type batteries: Be sure to remove the vent plugs before recharging.**

NOTICE

Never recharge the battery while the engine is running. Also, make sure all accessories are turned off.

CHECKING AND REPLACING THE BLADE TYPE FUSES

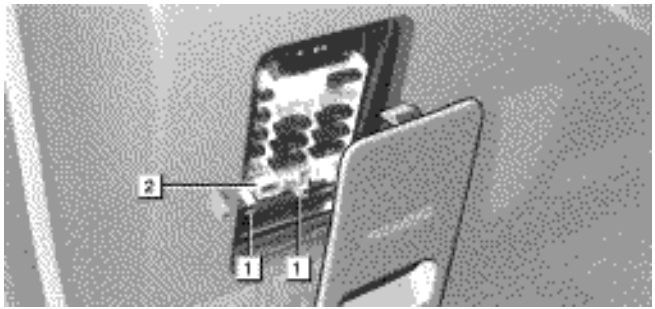

▶ ***Driver's side kick panel***

1 ***Spare fuses*** 2 ***Pull–out tool***

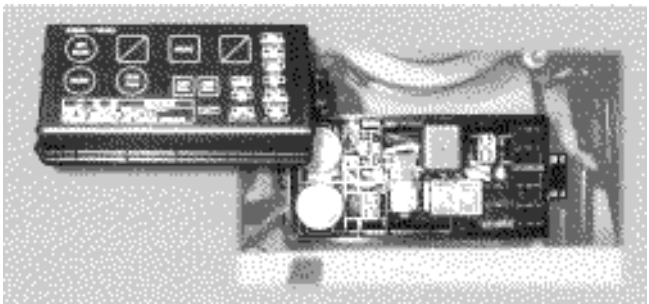

▶ ***Engine compartment***

1. Turn the ignition switch off and open the fuse box lid.

Determine which fuse may be causing the problem. The lid of the fuse box shows the name of the circuit for each fuse.

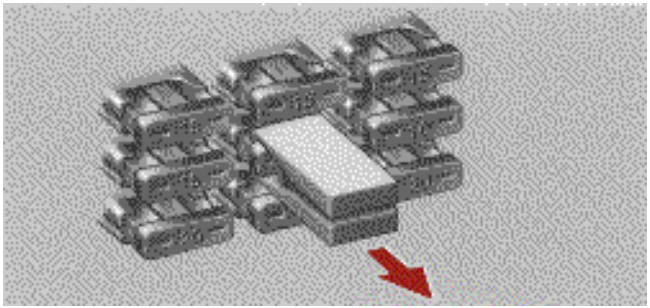

2. Make sure the inoperative component is turned off. Pull the suspected fuse straight out with the pull–out tool and check it. If it has blown, push a new fuse into the clips.

a. Look carefully at the fuse. If the thin wire is broken, the fuse has blown. If you are not sure or if it is too dark to see, try replacing the suspected fuse with one of the same value that you know is good.

b. Only Install a fuse with the amperage rating designated on the fuse box lid.

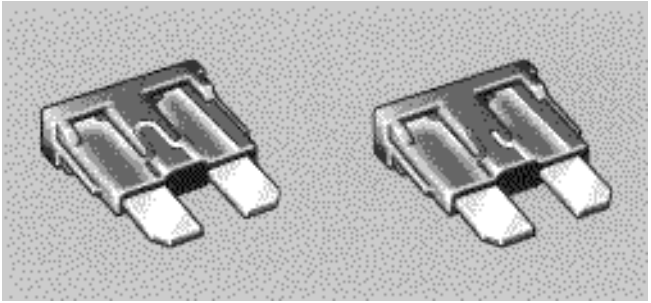

▶ ***Good*** ▶ ***Blown***

If you do not have a spare fuse, in an emergency you can pull out the “CIG,” “DOME” or “A.C” fuse, which may be dispensable for normal driving, and use it if its amperage rating is the same.

If you cannot use one of the same amperage, use one lower than, but as close as possible to, the amperage. If the amperage is lower than that specified, the fuse might blow out again but this does not indicate anything wrong. Be sure to get the correct fuse as soon as possible and return the substitute to its original clips.

It is a good idea to purchase a set of spare fuses and keep them in your vehicle for emergencies.

If the new fuse immediately blows out, there is a problem with the electrical system. Have your Lexus dealer correct it as soon as possible.

CAUTION

Never use a fuse with a higher amperage rating, or any other object, in place of a fuse. This may cause extensive damage and possibly a fire.

CHECKING THE CARTRIDGE TYPE FUSES

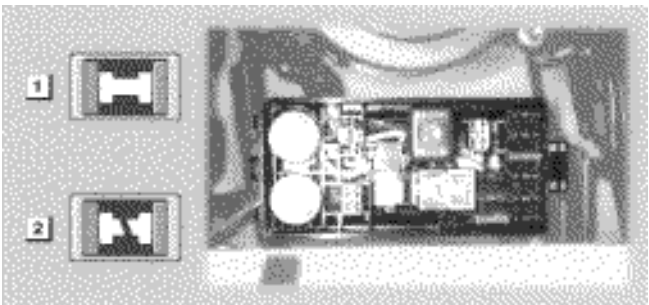

▶ 1 *Good* 2 *Melted*

If the headlights or other electrical components do not work and the blade type fuses are O.K., check the cartridge type fuses. If any of the cartridge type fuses are blown, they must be replaced.

If there is an overload in the circuits from the battery, the fuses are designed to blow before the entire wiring harness is damaged.

NOTICE

Before replacing the fuses, have the cause of electrical overload determined and repaired by your Lexus dealer.

CAUTION

Always use a genuine Lexus fuse or equivalent for replacement. Never install an ordinary wire – even for a temporary fix. This may cause extensive damage and possibly a fire.

CHECKING THE FUSIBLE LINKS

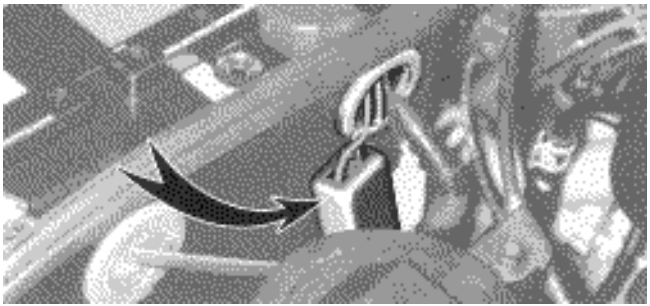

▶ *Fusible links*

If the headlights or other electrical components do not work and the fuses are O.K., check the fusible links. If any of the links is melted, it must be replaced.

If there is an overload in the circuits from the battery, the fusible links are designed to melt before the entire wiring harness is damaged.

NOTICE

- ***Before replacing the fusible links, have the cause of electrical overload determined and repaired by your Lexus dealer.***
- ***Always use a genuine Lexus fusible link or equivalent for replacement. Never install a wire – even for a temporary fix. It may cause extensive damage and possibly a fire.***

ADDING WASHER FLUID

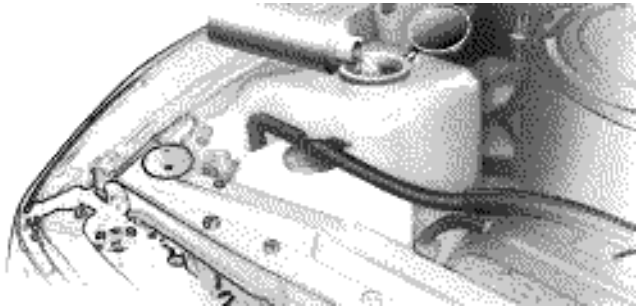

If any washer does not work, the washer tank may be empty. Add washer fluid.

You may use plain water as washer fluid. However, in cold areas where temperatures range below the freezing point, use washer fluid containing antifreeze. This product is available at your Lexus dealer and most auto parts stores. Follow the manufacturer's directions for how much to mix with water.

NOTICE
Do not use engine antifreeze or any other substitute because it may damage your vehicle's paint.

CHECKING THE HEADLIGHT AIM

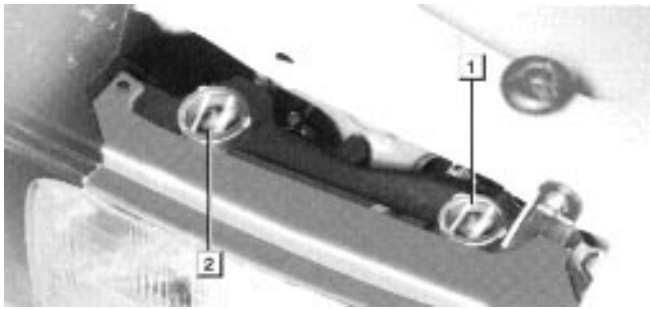

▶ 1 ***Beam angle gauge (vertical movement)***

2 ***Beam angle gauge (horizontal movement)***

Before checking the headlight aim:

1. Be sure that the body around the headlight is not deformed.
2. Park the vehicle on a level spot.
3. The driver gets into the driver's seat and puts the vehicle in a state readying for a driving (with a full tank).
4. Bounce the vehicle several times.

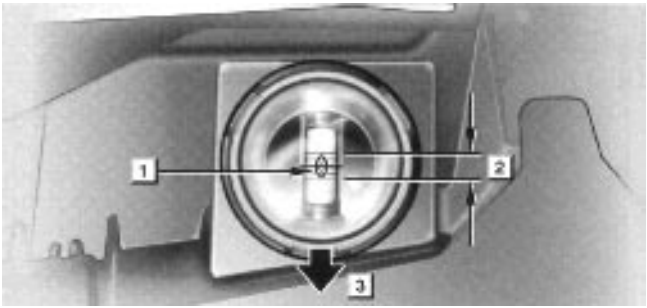

▶ 1 ***Bubble*** 2 ***Acceptable range*** 3 ***Front***

Vertical movement gauge: The bubble of the gauge should not deviate from the center of the gauge by more than two marks to either side of the gauge.

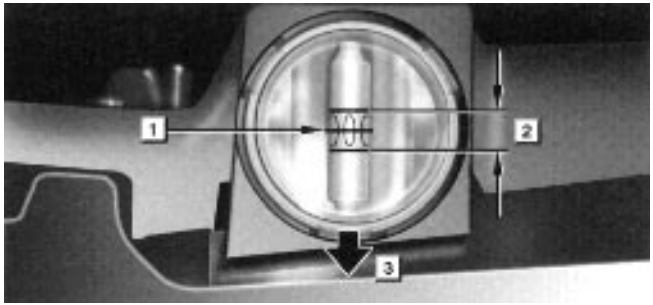

▶ 1 ***Mark*** 2 ***Acceptable range*** 3 ***Front***

Horizontal movement gauge: The red mark should not deviate by more than one mark to either side of the gauge.

If the error is over the value specified above, take the vehicle to your Lexus dealer to adjust the headlight aim.

REPLACING LIGHT BULBS

The illustration on the following pages show the locations of light bulbs. If it is necessary to replace a bulb, take your vehicle to your Lexus dealer as soon as possible. Use bulbs with the bulb numbers and wattage ratings given in the table.

CAUTION

Halogen bulbs have pressurized gas inside and require special handling. They can burst or shatter if scratched or dropped. Hold a bulb only by its plastic or metal case. Do not touch the glass part of a bulb with bare hands.

NOTICE

Only use a bulb of the listed type.

LIGHT LOCATION

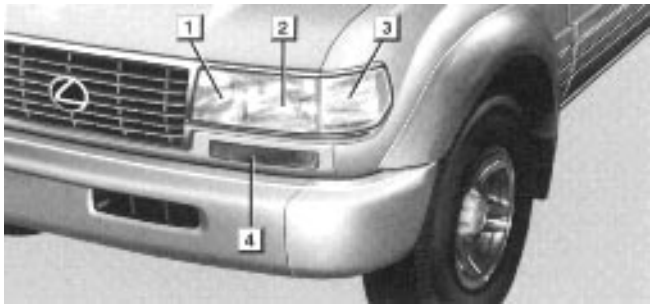

	Light Bulbs	Bulb No.	W	Type
1	Headlights (inner)	9005	65	B
2	Headlights (outer)	9006	55	A
3	Parking and front side marker lights	168	5	D
4	Front turn signal lights	1156	27	C

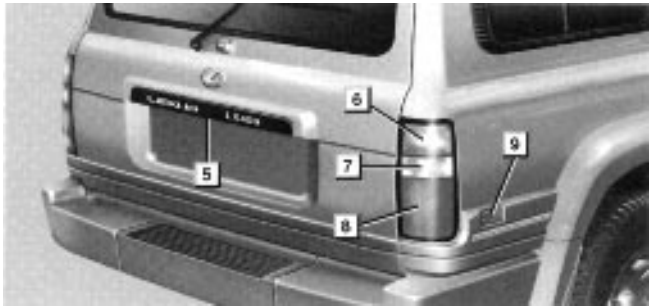

	Light Bulbs	Bulb No.	W	Type
5	License plate lights	168	5	D
6	Rear turn signal lights	1156	27	C
7	Back–up lights	1156	27	C
8	Stop and tail lights	1157	27/8	C
9	Rear side marker lights	194	3.8	D

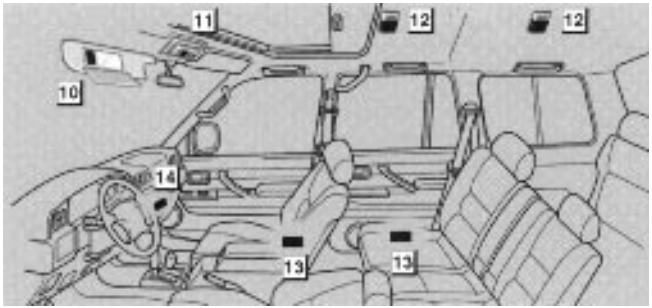

	Light Bulbs	Bulb No.	W	Type
10	Vanity lights	–	3	E
11	Personal light	–	10	C
12	Interior lights	–	10	E
13	Door courtesy light	–	3	D
14	Glovebox light	–	1.4	D

A: HB4 halogen bulbs
B: HB3 halogen bulbs
C: Single end bulbs
D: Wedge base bulbs
E: Double end bulbs

SERVICE PROCEDURES AND SPECIFICATIONS

Body

Specifications ---------- 238
Protecting your vehicle from corrosion ---------- 239
Washing and waxing ---------- 240
Cleaning the interior ---------- 241

SPECIFICATIONS

– DIMENSIONS AND WEIGHT

Overall length	4820 mm (189.8 in.)
Overall width	1930 mm (76.0 in.)
Overall height	1860 mm (73.2 in.)*1 1870 mm (73.6 in.)*2
Wheelbase	2850 mm (112.2 in.)
Tread – Front	1595 mm (62.8 in.)
– Rear	1600 mm (63.0 in.)
Vehicle capacity weight (occupants + luggage)	524 kg (1155 lb.)

*1: Unladen vehicle plus 2 occupants *2: Unladen vehicle

– FUEL TANK

Capacity	95 L (25.1 gal., 20.9 Imp. gal.)

PROTECTING YOUR VEHICLE FROM CORROSION

Proper care of your Lexus can help ensure long–term corrosion prevention.

The most common causes of corrosion to your vehicle are:

- The accumulation of road salt, dirt and moisture in hard–to–reach areas under the vehicle.
- Chipping of paint or undercoating caused by minor accidents or by stones and gravel.

The following conditions will cause or accelerate corrosion of your vehicle, so it is important to keep your vehicle, particularly the underside, as clean as possible and to repair any damage to paint or protective coatings as soon as possible.

- The presence of road salt or dust control chemicals, salt in the air near the sea coast, industrial air pollution.
- High humidity, especially at temperatures just above freezing point.
- Certain parts of your vehicle are wet or damp for an extended period of time, even though other parts of the vehicle are dry.
- Components of the vehicle which are prevented from quick–drying due to lack of proper ventilation are exposed to high temperature.

To help prevent corrosion on your Lexus, follow these guidelines:

Keep your vehicle clean by regular washing. In addition, observe the following points.

- If you drive on salted roads in the winter or if you live near the ocean, you should hose off the undercarriage at least once a month to minimize corrosion.
- High pressure water or steam is effective for cleaning the vehicle’s underside and wheel housings. Pay particular attention to these areas as it is difficult to see all the mud and dirt. It will do more harm than good to simply wet the mud and debris without removing them. The lower edge of doors, rocker panels and frame members have drain holes which should not be allowed to clog with dirt as trapped water in these areas can cause corrosion.
- Wash the underside of the vehicle thoroughly when winter is over.

See “Washing and waxing” for more tips.

Check the condition of your vehicle’s paint and trim. If you find any chips or scratches in the paint, touch them up immediately to prevent corrosion from starting. If the chips or scratches have gone through the bare metal, have a qualified body shop make the repair.

Check the interior of your vehicle. Water and dirt can accumulate under the floor mats and could cause corrosion. Occasionally check under the mats to make sure the area is dry. Be particularly careful when transporting chemicals, cleansers, fertilizers, salt, etc. These should be transported in proper containers. If a spill or leak should occur, immediately clean and dry the area.

Use mud shields on your wheels. If you drive on salted or gravel roads, mud shields help protect your vehicle. Full–size shields, which come as near to the ground as possible, are the best. We recommend that the fittings and the area where the shields are installed be treated to resist corrosion. Your Lexus dealer will be happy to assist in supplying and installing the shields if they are recommended for your area.

Do not park your vehicle in a damp, poorly ventilated garage. If you wash your vehicle in the garage, or if you drive it in covered with water or snow, your garage may be so damp it will cause corrosion. Even if your garage is heated, a wet vehicle can corrode if the ventilation is poor.

WASHING AND WAXING

Washing your Lexus by hand

Work in the shade and wait until the vehicle body is not hot to the touch.

1. Rinse off loose dirt with a hose. Remove any mud or road salt from the underside of the vehicle or in the wheel wells.
2. Wash with a mild car–wash soap, mixed according to the manufacturer's instructions. Use a soft cotton mitt and keep it wet by dipping it frequently into the wash water. Do not rub hard – let the soap and water remove the dirt.

Aluminum wheels: Use only a mild soap or neutral detergent.

Urethane bumpers and side moldings: Wash carefully. Do not scrub with abrasive cleaners. The bumper and side molding faces are soft.

Road tar: Remove with turpentine or cleaners that are marked safe for painted surfaces.

NOTICE

Do not use gasoline or strong solvents, which may be toxic or cause damage.

3. Rinse thoroughly – dried soap can cause streaking. In hot weather you may need to rinse each section right after you wash it.

4. To prevent water spots, dry the vehicle using a clean soft cotton towel. Do not rub or press hard – you might scratch the paint.

Automatic car wash

Your vehicle may be washed in an automatic car wash, but remember that the paint can be scratched by some type of brushes, unfiltered washing water, or the washing process itself. Scratching reduces paint durability and gloss, especially on darker colors. The manager of the car wash should be able to advise you whether the process is safe for the paint on your vehicle.

Waxing your Lexus

Polishing and waxing is recommended to maintain the original beauty of your Lexus' finish.

1. Always wash and dry the vehicle before you begin waxing, even if you are using a combined cleaner and wax.
2. Use a good quality polish and wax. If the finish has become extremely weathered, use a car–cleaning polish, followed by a separate wax. Carefully follow the manufacturer's instructions and precautions. Be sure to polish and wax the chrome trim as well as the paint.
3. Wax the vehicle again when water does not bead but remains on the surface in large patches.

CLEANING THE INTERIOR

CAUTION

Do not wash the vehicle floor with water, or allow water to get onto the floor when cleaning the vehicle interior or exterior. Water may get into audio components or other electrical components above or under the floor carpet (or mat) and cause a malfunction; and it may cause body corrosion.

Leather Interior

Remove dirt using a soft cloth dampened with 5% solution of neutral detergent for wool. Then thoroughly wipe off all traces of detergent with a clean damp cloth.

After cleaning or whenever any part of the leather gets wet, dry with a soft clean cloth. Allow the leather to dry in a ventilated shaded area.

NOTICE

- ***If a stain should fail to come out with a neutral detergent, apply a cleaner that does not contain an organic solvent.***
- ***Never use organic substances such as benzine, alcohol or gasoline, or alkaline or acid solutions for cleaning the leather as these could cause discoloring.***
- ***Use of a nylon brush or synthetic fiber cloth, etc. may scratch the fine grained surface of the leather.***
- ***Mildew may develop on soiled leather upholstery. Be especially careful to avoid oil spots. Try to keep your upholstery always clean.***
- ***Long exposure to direct sunlight may cause the leather surface to harden and shrink. Keep your vehicle in a shaded area, especially in the summer.***
- ***The interior of your vehicle is apt to heat up on hot summer days, so avoid placing on the upholstery items made of vinyl or plastic or containing wax as these tend to stick to leather when warm.***
- ***Improper cleaning of the leather upholstery could result in discoloration or staining.***

Synthetic Leather Areas (Part of door panels)

The synthetic leather areas may be easily cleaned with a mild soap or detergent and water.

First vacuum over the upholstery to remove loose dirt. Then, using a sponge or soft cloth, apply the soap solution to the synthetic leather. After allowing it to soak in for a few minutes to loosen the dirt, remove the dirt and wipe off the soap with a clean damp cloth. If all the dirt does not come off, repeat the procedure. Commercial foaming–type cleaners are also available which work well. Follow the manufacturer's instructions.

NOTICE

Do not use solvent, thinner, gasoline or window cleaner on the interior.

Carpets, Windows and Seat Belts

Begin by vacuuming thoroughly to remove as much dirt as possible. Several types of foam cleaners are available; some are in aerosol cans and others are powders or liquids which you mix with water to produce a foam. To shampoo the carpets, use a sponge or brush to apply the foam. Rub in overlapping circles. Do not apply water – the best results are obtained by keeping the carpet as dry as possible. Read the shampoo instructions and follow them closely.

The seat belts may be cleaned with mild soap and water or with lukewarm water.

Use a cloth or sponge. As you are cleaning, check the belts for excessive wear, fraying or cuts.

NOTICE

- ***Use a good foam–type shampoo to clean the carpets.***
- ***Do not use dye or bleach on the belts – it may weaken them.***
- ***The windows may be cleaned with any household window cleaner.***
- ***When cleaning the inside of the rear window, be careful not to scratch or damage the heater wires.***

Air Conditioning Control Panel, Car Audio, Instrument Panel, Console Panel, and Switches

Use a soft damp cloth for cleaning.

Soak a clean soft cloth in water or lukewarm water then lightly wipe off any dirt.

NOTICE

- ***Do not use organic substances (solvents, kerosene, alcohol, gasoline, etc.) or alkaline or acidic solutions. These chemicals can cause discoloring, staining or peeling of the surface.***
- ***If you use cleaners or polishing agents, make sure their ingredients do not include the substances mentioned above.***
- ***If you use a liquid car freshener, do not spill the liquid onto the vehicle's interior surfaces. It may contain the ingredients mentioned above. Immediately clean any spill using the method mentioned above.***

If you have any questions about the cleaning of your Lexus, your local Lexus dealer will be pleased to answer them.

SECTION 7

REPORTING SAFETY DEFECTS FOR U.S. OWNERS

Reporting safety defects for U.S. owners ---------- 247

REPORTING SAFETY DEFECTS FOR U.S. OWNERS

If you believe that your vehicle has a defect which could cause a crash or could cause injury or death, you should immediately inform the National Highway Traffic Safety Administration (NHTSA) in addition to notifying Toyota Motor Sales, U.S.A., Inc. (Toll–free: 1–800–25–LEXUS).

If NHTSA receives similar complaints, it may open an investigation, and if it feels that a safety defect exists in a group of vehicles, it may order a recall and remedy campaign. However, NHTSA cannot become involved in individual problems between you, your dealer, or Toyota Motor Sales, U.S.A., Inc.

To contact NHTSA, you may either call the Auto Safety Hotline toll–free at 1–800–424–9393 (or 366–0123 in Washington, D.C., area) or write to: NHTSA, U.S. Department of Transportation, Washington, D.C. 20590. You can also obtain other information about motor vehicle safety from the Hotline.

Owner's Manual for Airbag Manual ON–OFF Switches

CAUTION

You must review this Owner's Manual in order to determine whether you are permitted to operate this vehicle with the airbag turned off. If the special circumstances do not exist, then the airbag(s) should be turned ON to avoid serious personal injuries to front seat passengers.

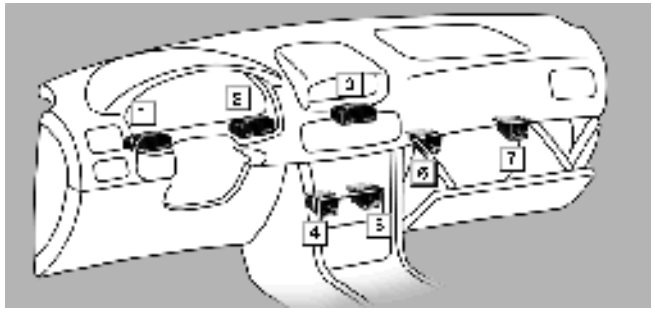

▶ 1 , 2 or 3 *OFF indicator light*
4 or 6 *Manual ON–OFF switch for driver airbag*
5 or 7 *Manual ON–OFF switch for passenger airbag*

This vehicle has been modified to include airbag manual ON–OFF switch(es). The switch(es) turn(s) the airbag OFF when needed, and is located in the glove compartment or in the console area.

"OFF" indicator(s) indicate the airbag status. They are located on the right or left side of the instrument meter cluster or in front of the center clock on the dashboard.

Switches are available for passenger and driver airbags. On vehicles equipped with side airbags, a switch to turn OFF the front passenger airbag will also simultaneously turn OFF the side airbag on that side only. The side airbag for the driver can not be turned off with any switch.

▶ 1 *AIRBAG warning light* 2 *OFF indicator light*
The illustration shown above is an example of the indicators for driver, passenger and side airbags.

To check the airbag manual ON–OFF system status, turn the ignition switch to the "ACCESSORY" position or the "ON" position. The "AIRBAG" warning light and the "OFF" indicator light should go on for approximately 5 seconds. If the airbag manual ON–OFF switch(es) are turned off, the "OFF" indicator will continue to illuminate, and if the airbag manual ON–OFF switch(es) are turned on, the "OFF" indicator will not illuminate.

▶*ON position* ▶*OFF position*

The illustration shown above is an example of the driver airbag manual ON–OFF switch

To turn OFF an airbag, insert your ignition key into the airbag manual ON–OFF switch located in the glove compartment or in the console area, and turn the switch counterclockwise to the "OFF" position. Remove the ignition key from the airbag manual ON–OFF switch, and insert the key in the ignition switch and turn to the "ACCESSORY" or "ON" position. The "OFF" indicator should illuminate to let you know that the airbag is off. The airbag will remain OFF until you turn it back on again, and the "OFF" indicator will stay on to remind you that the airbag is OFF.

CAUTION

If the airbag is turned off for a person who is not in a risk group identified by the United States government, that person will not have the extra protection of an airbag. In a crash, the airbag would not be able to inflate and help protect the person sitting there from death or serious personal injuries. Do not turn off the airbag unless the person sitting there is in a risk group.

To turn ON an airbag, insert your ignition key into the airbag manual ON–OFF switch located in the glove compartment or in the console area, and turn the switch clockwise to the "ON" position. Remove the ignition key from the airbag manual ON–OFF switch, and insert the key in the ignition switch and turn to the "ACCESSORY" or "ON" position. The "OFF" indicator should NOT illuminate to let you know that the airbag is on. The airbag will remain ON until you turn it back off again. If the airbag manual ON–OFF system has some failure,

- **Do not put an "at risk" person in front of an airbag.**
- **Take your vehicle to an authorized Toyota/Lexus Dealer to have it repaired.**

U.S. OWNERS: The U.S. Department of Transportation will authorize an airbag to be turned OFF ONLY FOR THE FOLLOWING AT RISK OCCUPANTS.

CANADIAN OWNERS: The Transport Canada has set the application for an airbag to be turned OFF ONLY FOR THE FOLLOWING AT RISK OCCUPANTS, and asks the customers to self–certificate whether they are the applicants of those below.

DRIVER SIDE	PASSENGER SIDE
Medical Condition. The driver has a medical condition which, according to his or her physician: ● Causes the driver airbag to pose a special risk for the driver; and ● Makes the potential harm from the driver airbag in a crash greater than the potential harm from turning off that airbag and allowing the driver, even if belted, to hit the steering wheel, dashboard, or windshield in a crash.	**Infant.** I transport an infant (less than 1 year old) who must ride in the front seat because: ● My vehicle has no rear seat; ● My vehicle has a rear seat too small to accommodate a rear–facing infant seat; or ● The infant has a medical condition which, according to the infant's physician, makes it necessary for the infant to ride in the front seat so that the driver can constantly monitor the child's condition.
Distance from driver airbag. Despite taking all reasonable steps to move back from the driver airbag, the driver is not able to maintain a 10–inch distance from the center of his or her breastbone to the center of the driver airbag cover.	**Child age 1 to 12.** A child age 1 to 12 must ride in the front seat because: ● My vehicle has no rear seat; ● Although children ages 1 to 12 ride in the rear seat(s) whenever possible, children ages 1 to 12 sometimes must ride in the front because no space is available in the rear seat(s) of my vehicle; or ● The child has a medical condition which, according to the child's physician, makes it necessary for the child to ride in the front seat so that the driver can constantly monitor the child's condition.

DRIVER SIDE	PASSENGER SIDE
	Medical condition. A passenger has a medical condition which, according to his or her physician: ● Causes the passenger airbag to pose a special risk for the passenger; and ● Makes the potential harm from the passenger airbag in a crash greater than the potential harm from turning off that airbag and allowing the passenger, even if belted, to hit the dashboard, or windshield in a crash.

Your vehicle has been designed to take advantage of the life saving and injury preventing benefits of the airbag supplemental restraint system (SRS). Turning off the SRS can reduce the occupant protection which your vehicle safety systems can provide to you in certain accidents and increase the likelihood of serious personal injuries. Your specific vehicle may be equipped with occupant restraint design features such as energy absorbing belt loops, seat belt webbing clamps, seat belt webbing material, and sewing pattern as well as the other features which were selected for your vehicle to be used together with an operational SRS. Depending on the type of accident, the operation of these many safety features could be affected resulting in serious personal injuries when the SRS is turned off.

U.S. OWNERS:Please contact your nearest dealer, the Toyota/Lexus toll–free Customer Assistance Number or the NHTSA at (800) 424–9393 if you have any questions concerning the use and operation of your airbag switch(es) or restraint systems.

CANADIAN OWNERS: Please contact your nearest dealer, the Toyota/Lexus toll–free Customer Assistance Number or the Transport Canada at (800) 333–0371 if you have any questions concerning the use and operation of your airbag switch(es) or restraint system.

Section 1

Introduction to Engine Control Systems

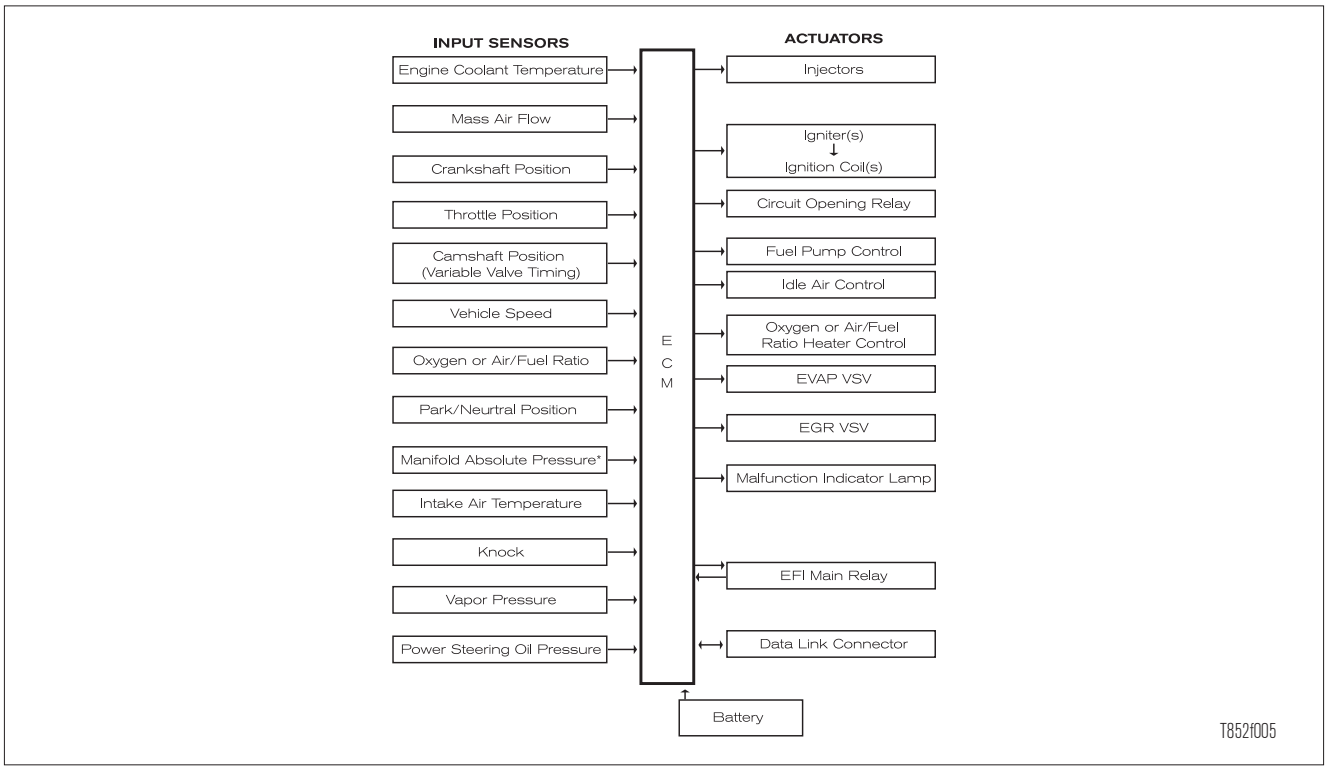

Lesson Objectives

1. Identify major control systems/components
2. Locate needed engine control systems service information
3. Familiar with engine control systems terms

Notes

Section 1

Introduction to Engine Control Systems

Basic Engine Operation

The need to achieve high power output, high fuel economy, and the lowest amount of emission gases from today's engines has led to very sophisticated engine control systems. A computer, referred to as an Engine Control Module (ECM), manages a variety of engine systems. These systems are basically divided into the following areas:

- Air induction systems.
- Fuel system.
- Ignition system.
- Exhaust/Emission control system.

All the above and other systems are controlled or sensed by the ECM. The ECM with its sensors and actuators is often referred to as the electronic control system. It is important to keep in mind while diagnosing engine concerns that the fundamentals of engine operation (correct mixture of air and fuel sufficiently compressed and ignited at the proper time) are not different. The following is an overview of these systems.

Basic Air Induction System

The amount of air is measured and the air is controlled for efficient engine operation. The idle air control valve is not used on electronic throttle controlled systems.

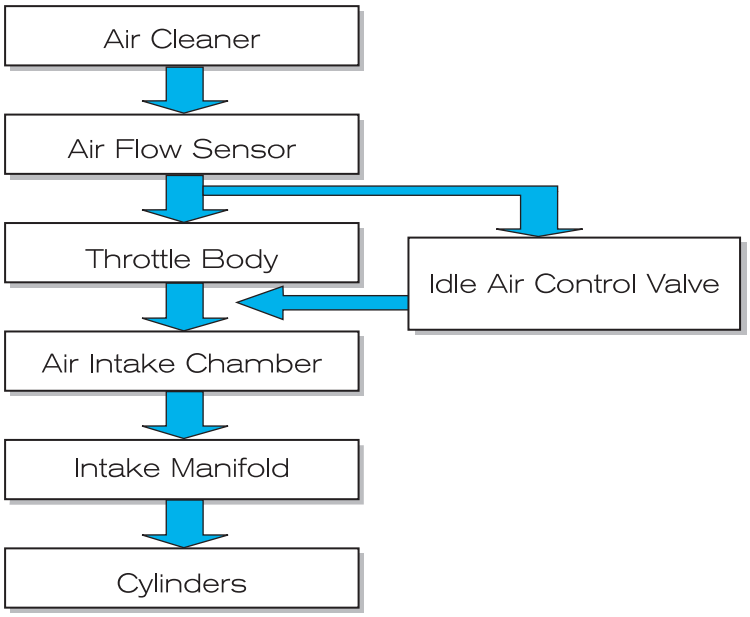

Fig. 1-01

L852f001

Air Induction System

Air filtered by the air cleaner is measured by the air flow sensor (commonly called the mass air flow sensor). The volume of air is regulated by the throttle valve. The idle air control valve regulates the amount of air bypassing the throttle valve to adjust idle speed. The air intake chamber and intake manifold are tuned for efficient engine operation.

There are many variations on the basic air induction system. The Acoustic Controlled Induction System (ACIS) modifies air intake runner length for greater efficiency. Variable valve timing changes valve overlap for better engine efficiency.

Basic Fuel Injection System

Based on signals received, the ECM calculates how long and when to turn on the injectors to deliver the correct amount of fuel.

**The location of the pressure regulator varies with system. When excess fuel is returned to the fuel tank (return type) the pressure regulator is after the injectors. On the returnless fuel system, the pressure regulator is in the fuel tank.*

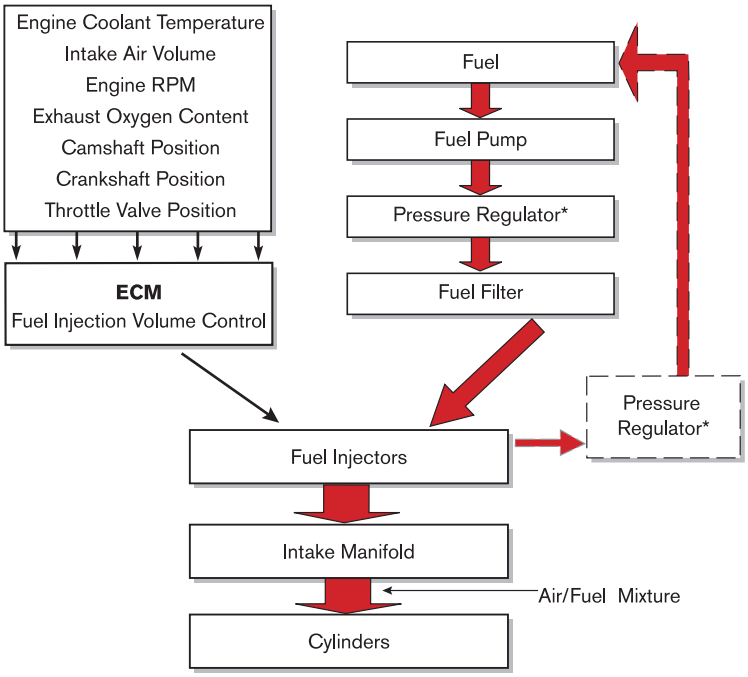

Fig. 1-02

T852f002

Fuel System

The fuel system needs to deliver the correct volume of fuel to the cylinders under a variety of conditions.

Fuel is pressurized by the fuel pump and flows to the fuel injectors. A pressure regulator, located in the fuel tank or after the injectors, regulates fuel pressure. The ECM controls when and how long the fuel injectors are on. The injectors, when on, allow fuel to flow into the intake manifold. The ECM calculates how much fuel to be injected based on a variety of parameters, primarily temperature and intake air volume.

There are other components used on a fuel injection system to modify its operation and are covered in the fuel system section.

Basic Ignition System

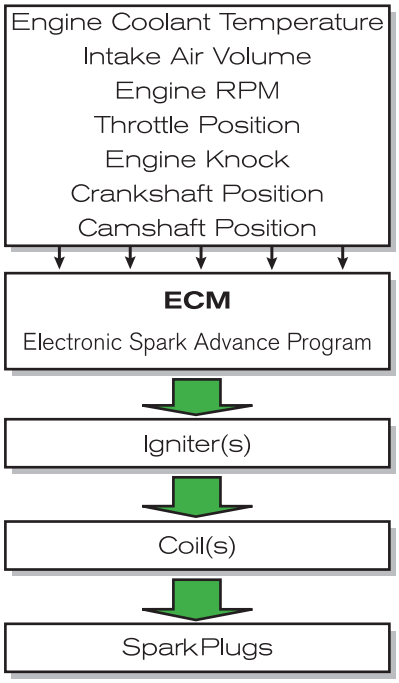

Fig. 1-03
T852f003

Ignition Systems

Based on engine operating conditions, the ECM determines when to ignite the air/fuel mixture according to its programming. The igniter turns the ignition coil(s) on and off based on a signal from the ECM. The high voltage needed to create the spark is generated in the coil(s).

Exhaust and Emission Systems

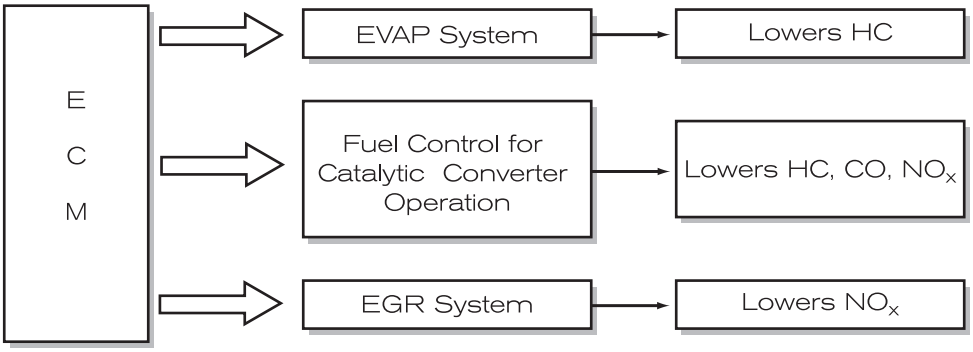

Fig. 1-04
T852f004

Exhaust and Emission Systems

The ECM manages systems and components to meet regulations. The evaporative system (EVAP) prevents gasoline vapors (HC) from entering the atmosphere. The fuel control program adjusts the air/fuel ratio so the catalytic converter runs at peak efficiency. This lowers hydrocarbons (HC), carbon monoxide (CO), and oxides of nitrogen (NO_x). The exhaust gas recirculation system (EGR) also helps to lower NO_x.

Other Systems

Engine components that were once mechanically controlled are now electronically controlled. The goal is better engine efficiency and vehicle safety. Some of these systems are:

- Electronic Throttle Control-intelligent (ETCS-i) - the ECM adjusts throttle opening according to driver demand and vehicle conditions. This enhances vehicle performance and safety.

- Acoustic Control Induction System (ACIS) - the ECM will vary the effective intake runner length for better engine performance.

- Variable Valve Timing-intelligence (VVT-i) - the ECM adjusts when the valves open to provide better fuel economy, horsepower, and lower emissions.

There is no doubt that these systems will be modified and new systems added as new models are introduced.

Another significant trend is the integration of individual systems. For example, the ECM works in coordination with the Vehicle Stability Control system to provide better vehicle control in slippery conditions.

Basic Electronic Engine Control System

The following chart shows a basic electronic engine control system. Sensors provide the needed data. The ECM will will send the appropriate signal to the actuators.

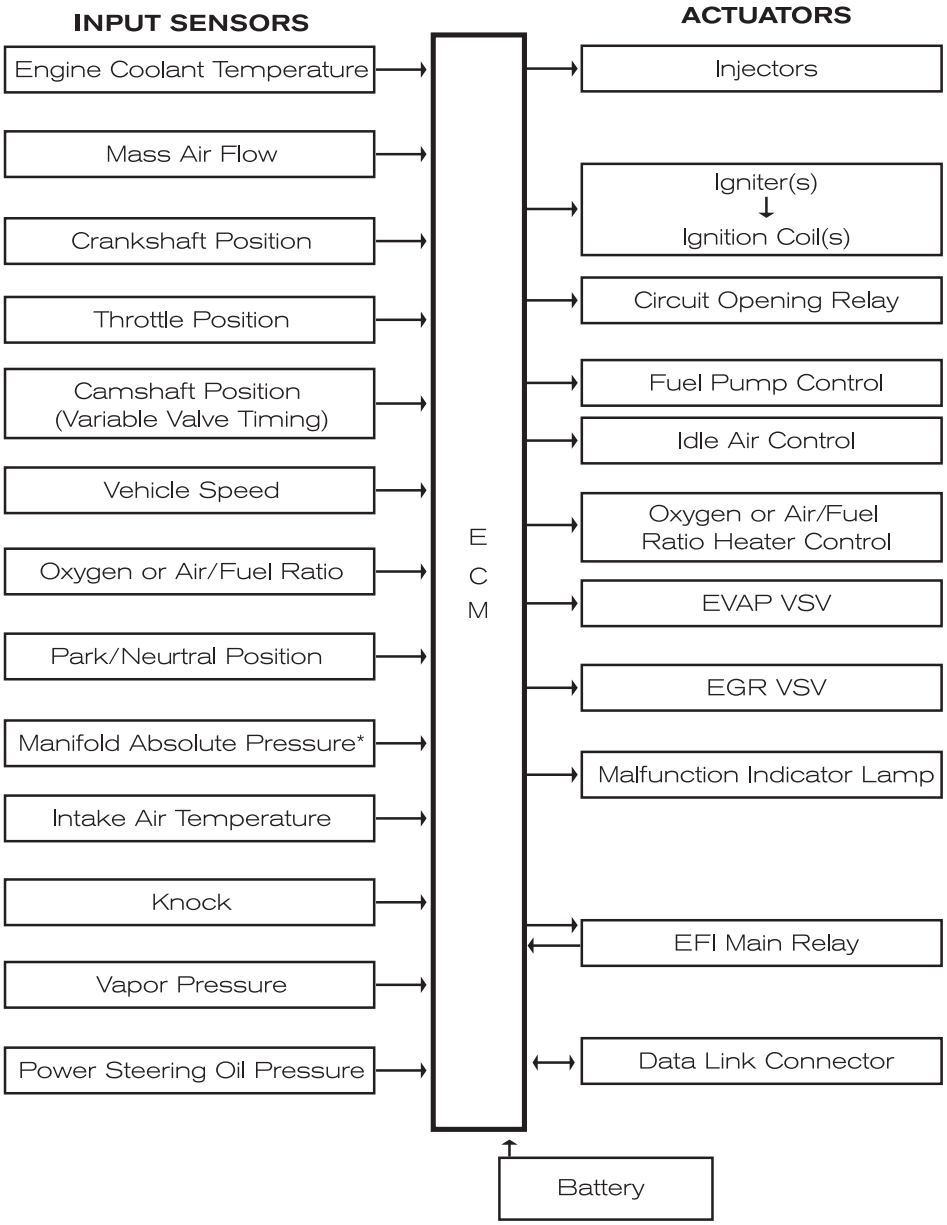

**Mass Air Flow (MAF) sensor equipped engines do not use a manifold absolute pressure sensor. All Lexus engines use MAF sensors.*

Fig. 1-05

T852f005

Electronic Engine Control Systems

The electronic engine control system consists of sensors that detect various engine conditions, a computer called the Electronic Control Module (ECM), and numerous actuators that control a variety of engine components.

Accurate diagnosis of the electronic engine control system consists of several elements:

- fundamental knowledge of how the system works
- finding the correct repair information
- correctly interpreting data from the engine control system
- performing the proper tests accurately

To understand how the ECM controls various engine functions, the electronic control system is divided into three sections:

- input
- process
- output

Electronic Control System

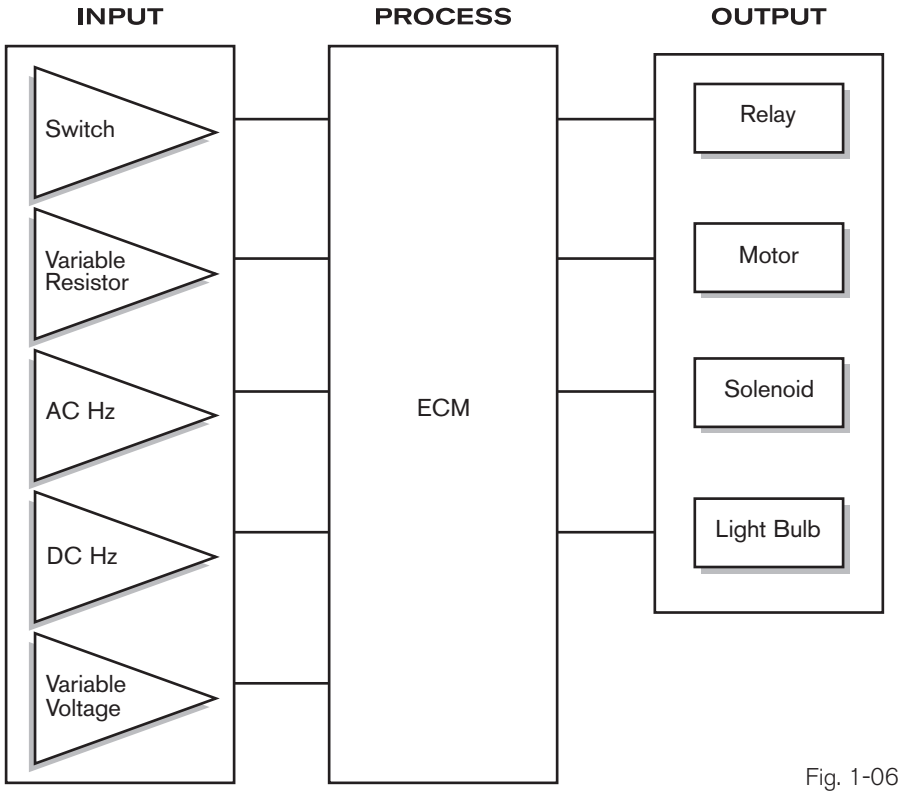

Fig. 1-06

T852f006

Inputs

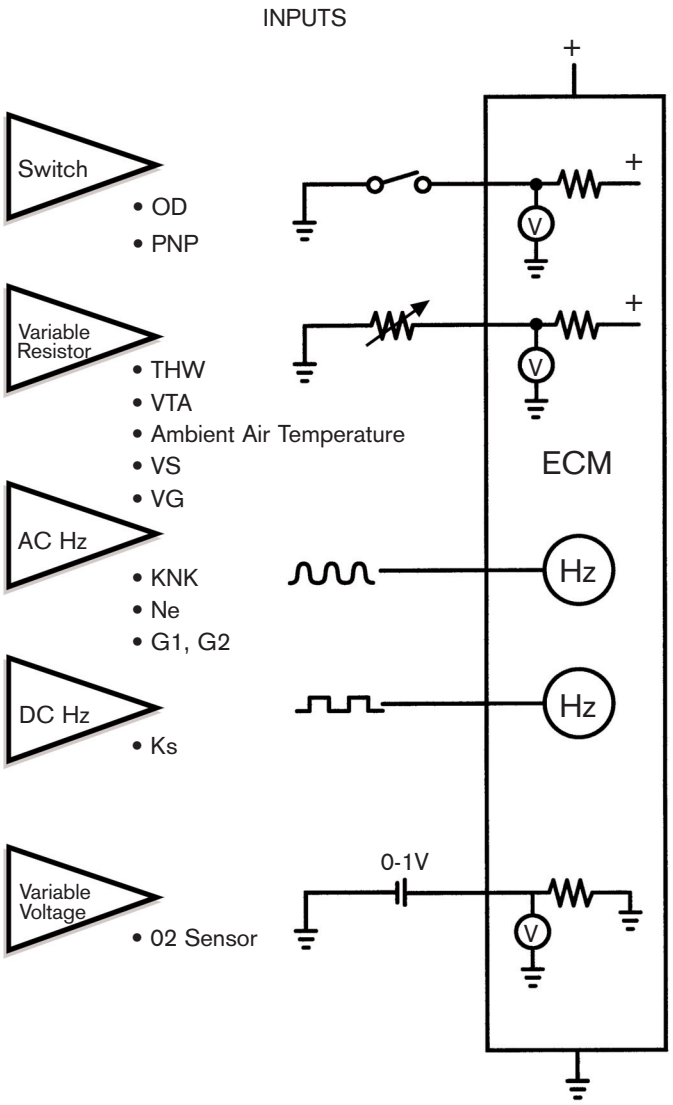

Fig. 1-07
T852f007

Inputs Sensors are used to convert engine operating conditions like temperature, rpm, throttle position, and other parameters into electrical signals which the ECM constantly monitors. Electronic circuits built into the ECM sense some circuits, (like the electrical load circuit) for proper operation. With this data, the ECM has sufficient information to run the programs that operate the engine and emission control systems.

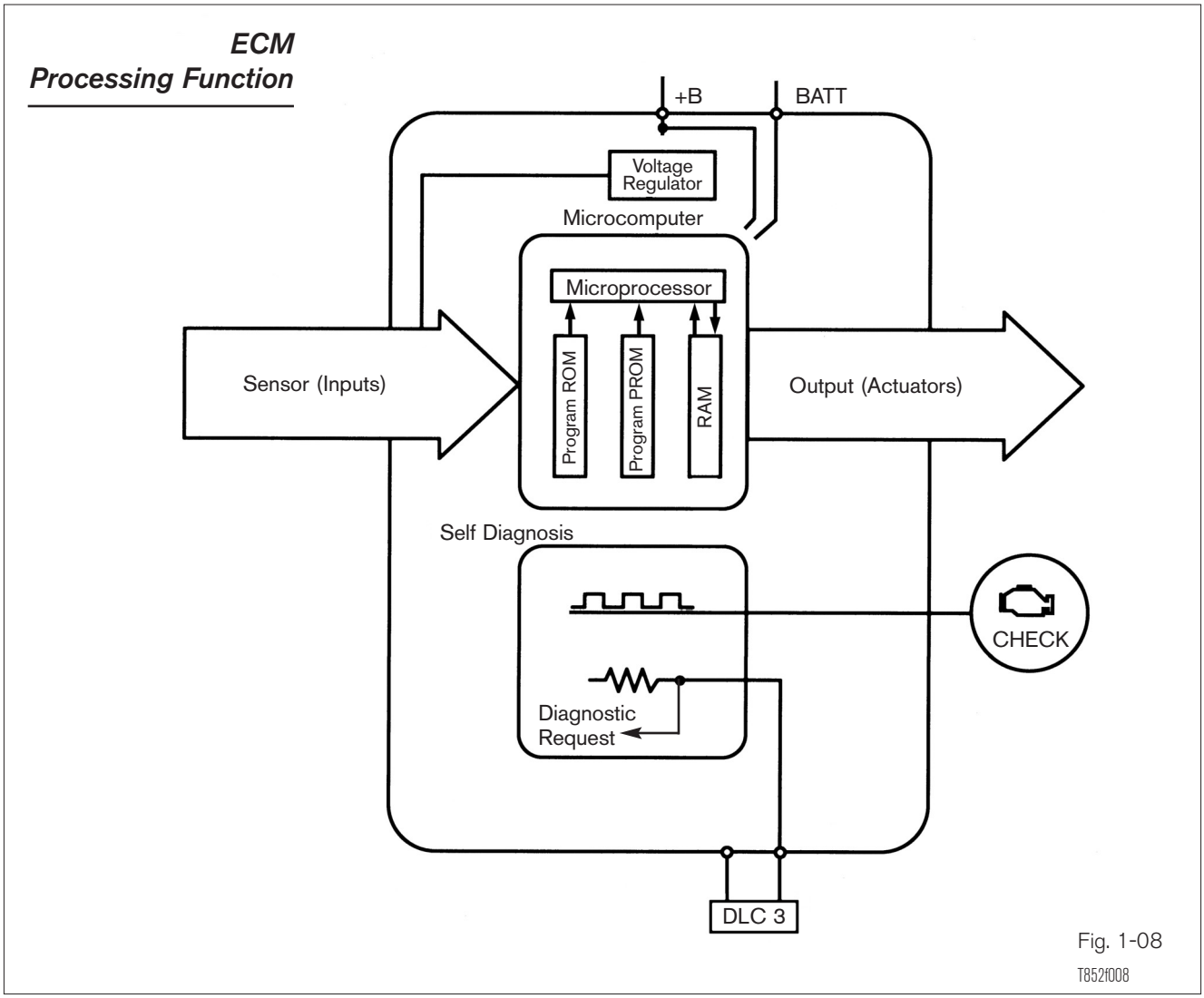

Fig. 1-08

Engine Control Module (ECM)

The ECM processes the input signals, arrives at a decision based on its programming, and carries out the needed action. The ECM also stores in its memory vehicle/engine information to make certain the vehicle performs as prescribed, Diagnostic Trouble Codes (DTC) and other diagnostic information. The ECM may also control other functions such as transmission/transaxle control.

The latest ECMs also contain the vehicle information number (VIN), calibration identification (CAL ID), and calibration verification. This is done to insure the calibration settings are correct for that vehicle/engine.

ECMs should be handled with care. Electronic components are sensitive to electrostatic discharge (static electricity). Always follow the recommended procedures when handling these components.

Output Actuators and Devices

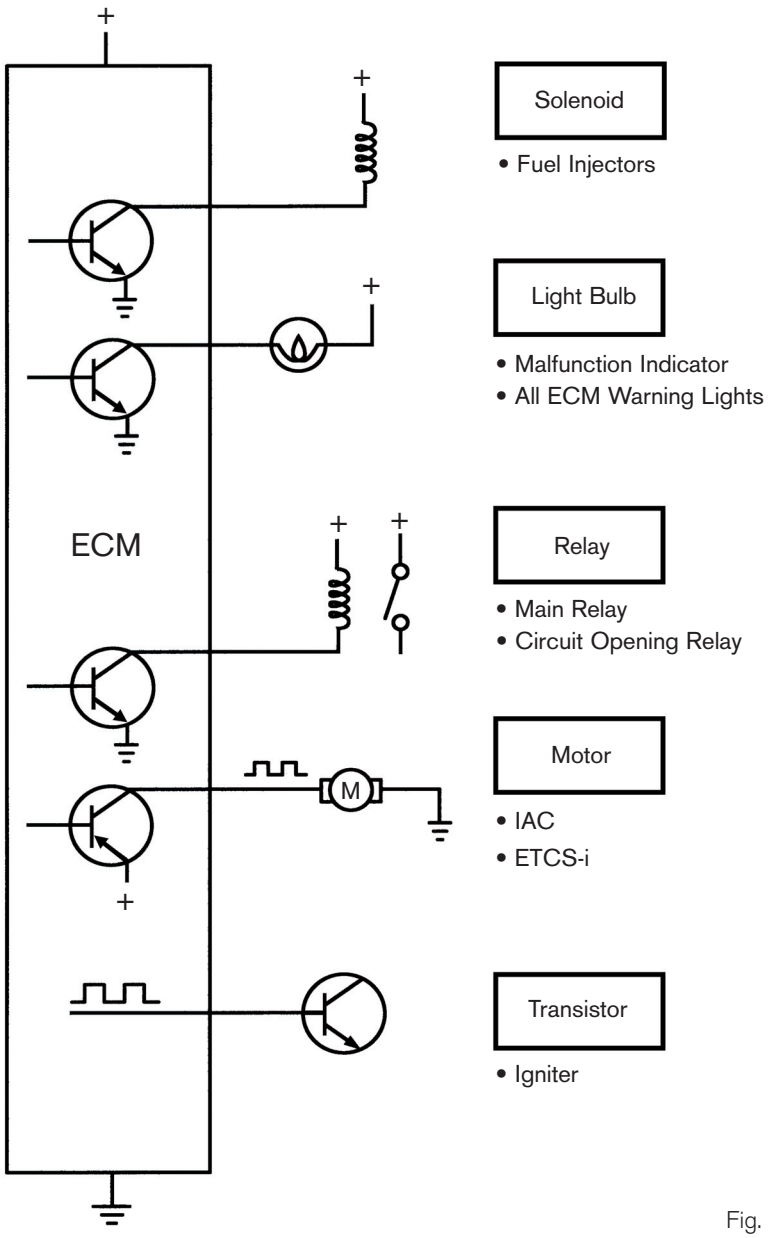

Fig. 1-09

T852f009

Outputs (Actuators)

Output commands are sent from the microprocessor inside the ECM to the various output driver transistors. The output drivers then turn on or off, causing the actuator (output) device to turn on or off.

Types of output actuators are:

- Solenoids - Fuel Injectors, Vacuum Switching Valves (VSV)
- Relays - Circuit Opening Relay

- Transistors - Igniter
- Lights - Malfunction Indicator Light (MIL)
- Motors - Electronic Throttle Control Motor
- Heater(s) - Oxygen and Air/Fuel Ratio sensor heaters
- Clutch - Electronic Throttle Control

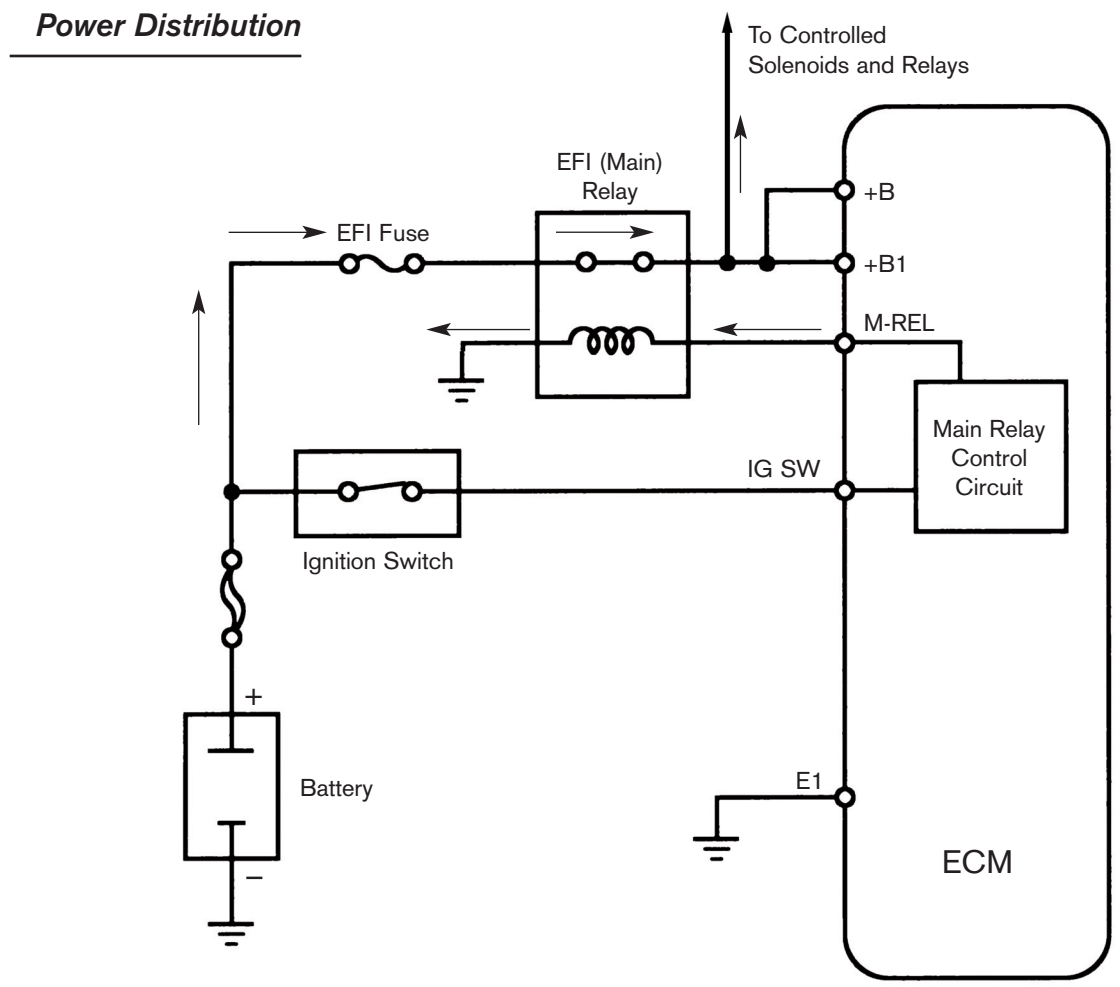

Fig. 1-10
T852f010

Power Distribution

When the ignition switch is turned on, current is supplied to the ECM initializing the computer program, and supplying electrical current to all of the system controlled solenoids, relays, and motors. The current operating the ECM returns to ground through E1. Without a properly

operating power distribution circuit, the ECM and engine will not function and there will be no communication with the Diagnostic Tester.

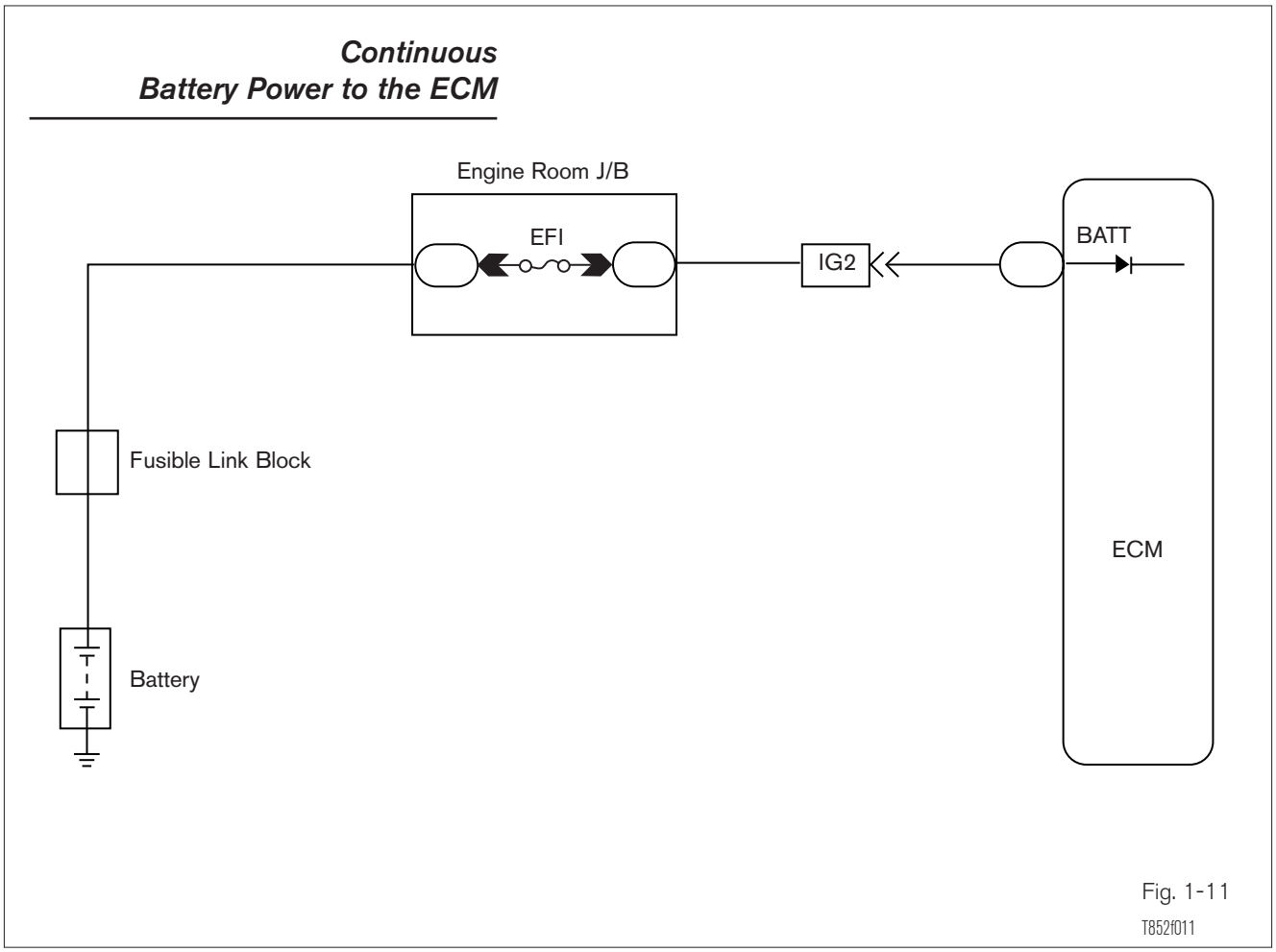

Fig. 1-11

The ECM also has another battery power line used to store DTCs, ignition timing, fuel trim, and other values stored in memory. If there is no power at this terminal, DTCs and other stored memory values are erased.

Voltage Control Signal

The ECM sends out a regulated voltage of 5 volts on the voltage control (VC or VCC) signal line. This voltage is used for many sensors such as temperature sensors, position sensors, throttle position sensors, etc.

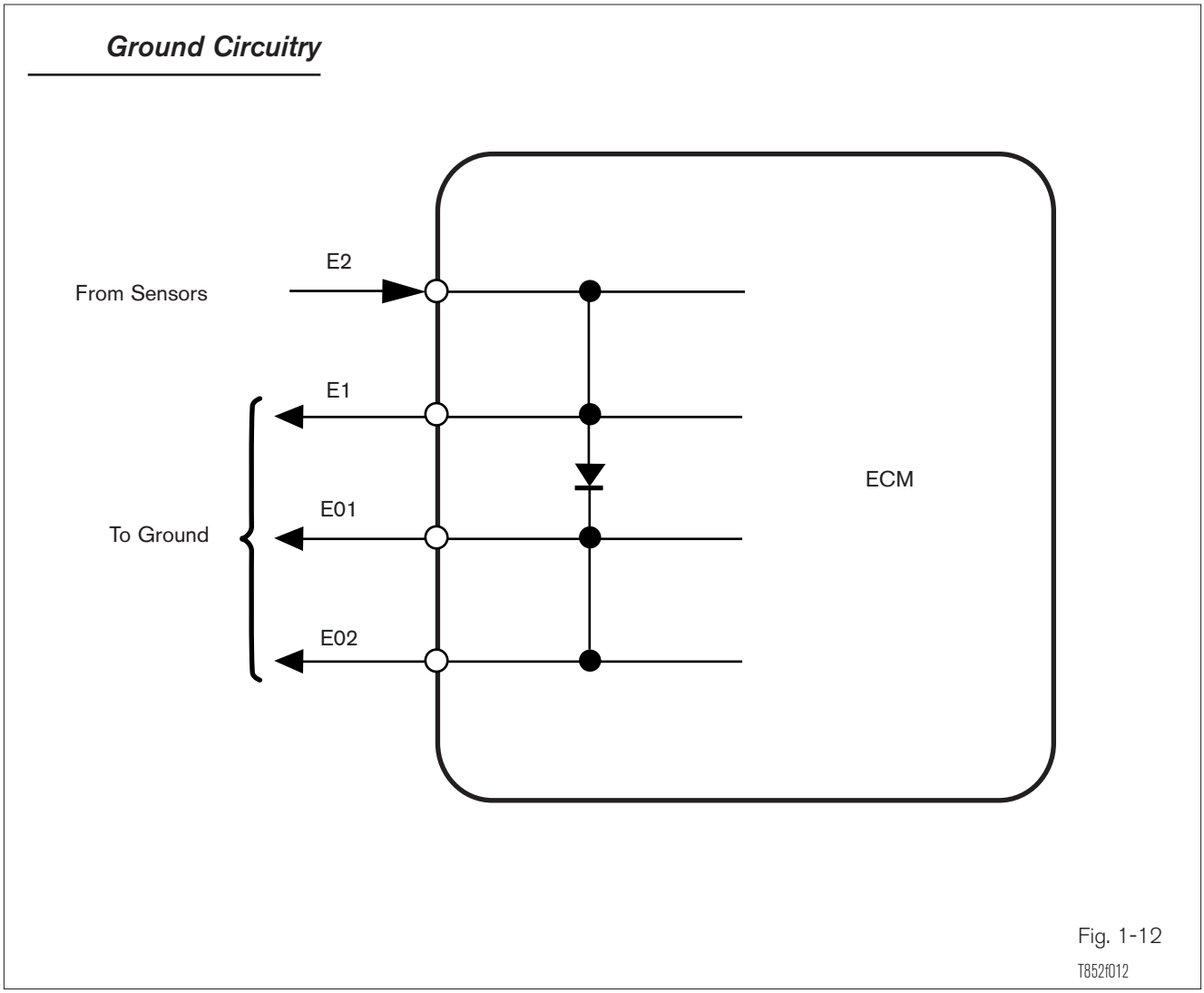

Ground Circuits

The ground circuit is equally as important as the power circuits. The ECM has multiple grounds, and is usually the ground path for sensors and actuators. The number of grounds will vary with engine and model year.

Ground circuits are often checked by measuring the voltage drop, and the wires are checked for continuity.

Despiking/ Clamping Circuits

When a circuit that carries a large current is suddenly turned off, a high voltage is induced in the coil windings found in relays and solenoids. This high voltage spike can damage the transistor in the ECM, generate a false signal in other circuits, or generate radio noise. A diode or resistor prevents these things from happening. The diode or resistor is connected in parallel to the coil winding limiting the high

voltage spike. An ECM that is frequently being replaced for the same cause may have a damaged despiking diode/resistor in the circuit.

Despiking/Clamping Circuits

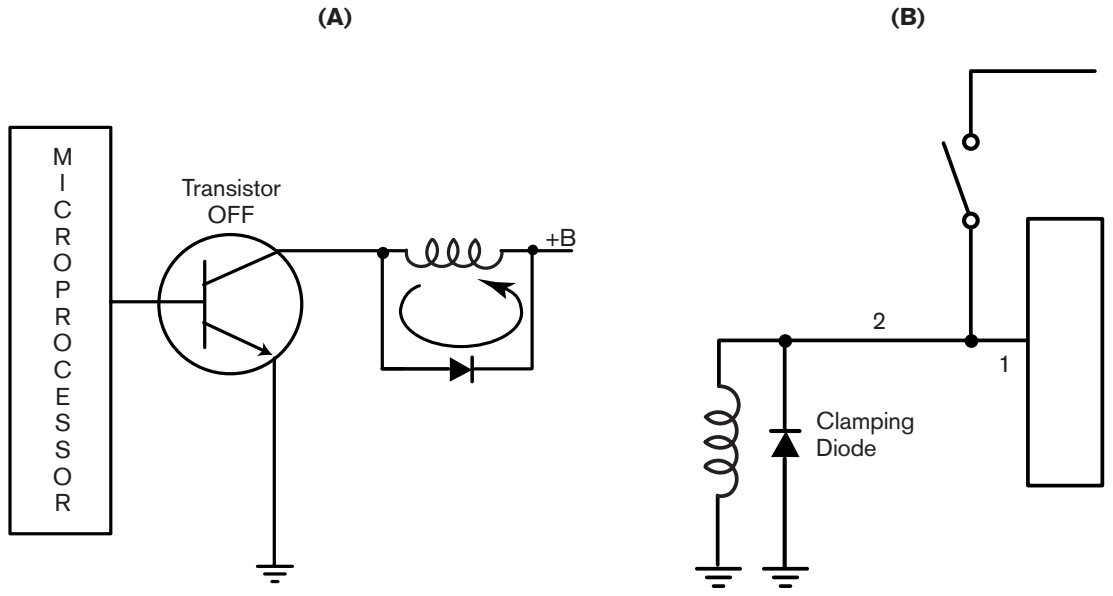

Fig. 1-13

T852f396/T852f014

Clamping Diode

(A) During normal operation (circuit on) the diode is connected with a polarity that will not allow it to conduct. When the circuit is turned off, the collapse of the magnetic field across the coil induces a voltage in the opposite direction. The diode conducts this induced voltage preventing a voltage spike and damage to the ECM.

(B) With the switch closed, current flows in circuit 2 energizing the coil. Circuit 1 tells the ECM the circuit is on. The diode will not conduct current as this time.

When the switch is turned off the magnetic field around the coil collapses. This collapse generates a voltage in the coil with opposite polarity (top-negative, bottom-positive). This polarity is correct for the diode to conduct, so current will flow through the diode. This will prevent voltage from building on circuits B and A and prevent high voltage from damaging the ECM.

Resistor Clamping Circuit

A resistor can be used for the same purpose. The resistor has a very high resistance in relation to the circuit (400-600 Ohms). The resistor provides an alternative path preventing the high voltage spike

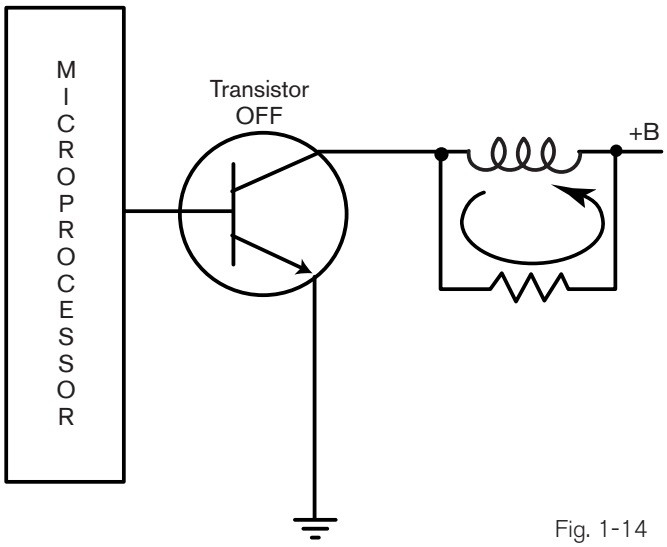

Fig. 1-14

T852f015

Diagnostic Link Connectors

Three types are shown here. DLC1 is found under the engine hood. DLC2 is found in the passenger compartment, drivers side. DLC3 is found within a foot (right or left) of the steering column.

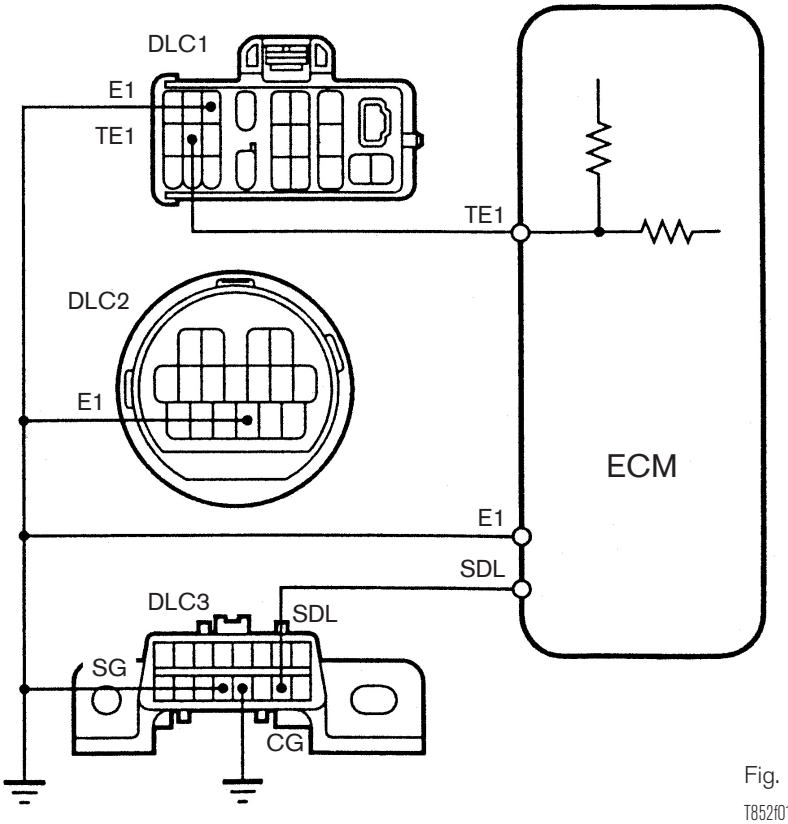

Fig. 1-15

T852f016

Diagnostic Link Connectors

The Diagnostic Link Connector (DLC) provides a way to communicate with the ECM and simplifies many diagnostic procedures.

Three types of DLCs have been used, and some years will have all three. OBD II regulations require a standard DLC for vehicles, and it is referred to as DLC3.

EngineControl System Diagnostic Information

Knowing where to find the information can save you time. The following is an explanation of the information resources are needed for accurate and timely repairs.

Repair Manual

The Repair Manual (RM) contains the following sections (note: this section follows the 1996 and newer format).

Introduction (IN)

This section contains how to troubleshoot ECU controlled systems, the abbreviations used and a glossary of terms. You will find the troubleshooting procedures and where to find more information.

Diagnostics (DI)

This part is the most used section for diagnosing engine control system concerns.

- **Pre-Check** contains an overview of obtaining DTCs and Freeze Frame. Also, it describes what to do if there is no communication between the ECM and Diagnostic Tester.
- The **Fail-Safe Chart** is used indicating ECM strategy when certain DTCs are set.
- The **Basic Inspection Section** is a fundamental check of air, fuel, and spark.
- **Engine Operating Condition** explains the items displayed on the Diagnostic Tester and show normal condition signals.
- The **Diagnostic Trouble Code Chart** displays all the applicable DTCs for that engine, possible trouble areas, and the page to turn to to diagnose the DTC.
- **Parts Location** shows a picture of the vehicle where the major components are found.
- **Terminals of the ECM** shows a view of the ECM and its connectors as you would view them. This view is NOT in the EWD. This is a very useful view for knowing which circuit to to find and test. You will also

find the wire colors, signal acronym and standard voltages at each terminal.

- **Problem Symptoms table** is used when there is no DTC displayed to direct you to the appropriate area.

- **Circuit Inspection** is where the DTCs are diagnosed. At the end of this section, after the last DTC diagnosis, you may find the Starter Signal Circuit, IACV Control Circuit, ECM Power Source Circuit and Fuel Pump Control Circuit diagnosis.

Emission Control (EC)

Shows component checks of emission system components such as the EVAP canister, EGR system, etc.

Sequential Fuel Injection (SFI)

This section contains the component check for the sensors and actuators of the fuel injection system. Here you will find how to remove and test components.

Ignition System (IG)

This section shows how to check ignition system components.

Electrical Wiring Diagram Manual (EWD)

The EWD manual provides you sections and overall view of the engine control system with power circuits, ground circuit, connectors and associated numbers, and a brief description of operation. Because the wires are provided in color, it is often easier to use the EWD to locate components and related signals by wire color, then use the ECM connector view in the DI section to determine where to connect a DVOM or oscilloscope.

Diagnostic Tester Manual

This manual comes when a Diagnostic Tester is purchased. Updates are provided when the software card is updated. This manual provides you with operation of the tester in a variety of modes.

Technical Service Bulletins (TSB)

These bulletins provide you with the latest solutions and corrections that are not provided in the Repair Manual.

Hotline Support

The hotline is for those problems when you need advice when all other methods did not lead to a solution. It is critical that you provide and record all DTCs, conditions when symptoms occur, and what has been done to repair the concern. Accurate information is vital - write it down.

Technical Information System (TIS)

This networked computer system will provide you with all the above information in one location. The significant advantages of TIS is that large quantities of the latest information can be retrieved from one source, and the information can be accessed by a variety of methods.

History of On-Board Diagnostics

This section is a summary of emission control regulations and will provide background on the regulations that relate to On Board Diagnostics. The emphasis is placed on the differences between On Board Diagnostics, generation 1 (OBD) and On Board Diagnostics, generation 2 (OBD II).

Federal and state efforts to improve air quality over the years have created regulations that influence the design of the emission and engine control systems on all vehicles. Standards are set to provide regulation, monitoring, and enforcement to achieve mandated goals. On Board Diagnostics (OBD) monitor the vehicle's systems and components and report failures through Diagnostic Trouble Codes (DTC). The state of California has been instrumental in setting emission standards. For this reason, systems have appeared on California vehicles before appearing on vehicles sold in other states (Federal Vehicles). Today federal and state standards may vary, but the equipment and monitoring systems are essentially the same.

OBD Objectives

The primary objective of OBD systems is to reduce vehicle emissions and the possibility of further damaging emission components by detecting and reporting a malfunction. To meet that objective:

- The driver is alerted of a malfunction in the emission control system by the Malfunction Indicator Lamp (MIL).
- All vehicles are certified to meet or exceed emission standards. OBD systems are designed to monitor and report malfunctions when emission output will exceed mandated standards.

OBD (On-Board Diagnostic System, Generation 1)

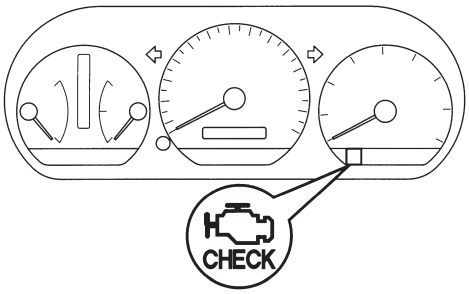

- Current related checks (open or short)
- Limited system monitoring (A/F & EGR)
- Minimal use of rationality checks
- Limited DTCs
- Limited use of Serial Data
- System and component names not standardized
- DTCs not standardized

Fig. 1-16
T852f017

OBD (On-Board Diagnostic System, Generation 1)

In April 1985, the California Air Resources Board (CARB) approved On-Board Diagnostic system regulations, referred to as OBD. These regulations were phased in beginning in 1988 to include cars and light trucks marketed in the State of California. They required that the engine control module (ECM) monitor critical emission related components for proper operation and illuminate a Malfunction Indicator Lamp (MIL) on the instrument panel when a Malfunction was detected.

Although the OBD regulations initially apply to California emissions certified vehicles, some or all of the OBD system features are found on Federal emissions certified vehicles as well.

The OBD system uses Diagnostic Trouble Codes (DTC) and fault isolation logic charts in the repair manual to assist technicians in determining the likely cause of engine control and emissions system malfunctions.

The basic objectives of this regulation are twofold:

1. To improve in-use emissions compliance by alerting the vehicle operator when a malfunction exists.

2. To aid repair technicians in identifying and repairing malfunctioning circuits in the emissions control system.

OBD applies to systems that are considered most likely to cause a significant increase in exhaust emissions when a malfunction occurs. Commonly, this includes:

- All major engine sensors
- The fuel metering system
- Exhaust gas recirculation (EGR) function

Components and circuits are monitored for continuity, shorts, and in some cases, normal parameter range. OBD systems were normally limited to the detection of an open or short in a sensor circuit.

OBD Malfunction Indicator Light (MIL)

A Malfunction Indicator Lamp (MIL) is required to serve as a visual alert to the driver of a malfunction in the system. When a malfunction occurs, the MIL remains illuminated as long as the fault is detected and goes off once normal conditions return, leaving a Diagnostic Trouble Code (DTC) stored in the ECM memory.

OBD Diagnostic Trouble Codes (DTC)

Diagnostic Trouble Codes or DTCs are generated by the on-board diagnostic system and stored in the ECM memory. They indicate the circuit in which a fault has been detected. DTC information remains stored in the ECM long-term memory regardless of whether a continuous (hard) fault or intermittent fault caused the code to set. Lexus products with OBD store a DTC in the ECM long-term memory until power is removed from the ECM. In most cases, the EFI fuse powers this long term (keep alive) memory.

OBD II (On-Board Diagnostic System, Generation 2)

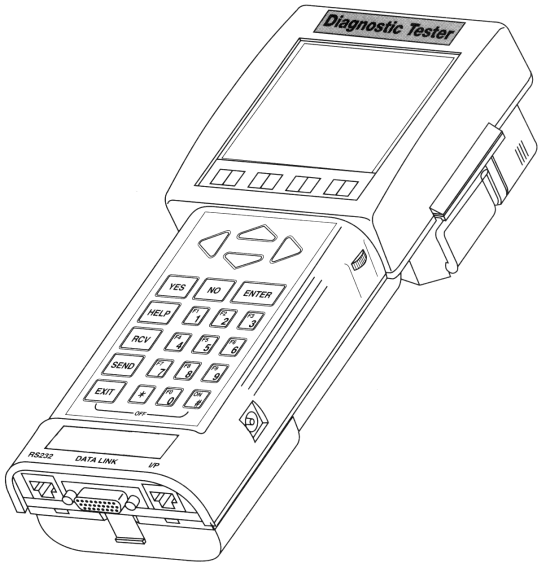

- Circuit continuity and out of range values monitored
- Systems monitored
- Rationality checks used (logic)
- Expanded DTCs
- Freeze Frame Data stored with DTC
- Serial Data required
- Active Tests
- Standards established

Fig. 1-17
T852f018

OBD II (On-Board Diagnostic System, Generation 2)

Although OBD supplies valuable information about a number of critical emissions related systems and components, there were several important items not incorporated into the OBD standard because of technical limitations at the time. Since the introduction of OBD, several technical breakthroughs have occurred and stricter emissions standards were mandated.

As a result of these technical breakthroughs and because existing Inspection and Maintenance Diagnostic programs proved less effective than desired in detecting critical emissions control system defects under normal operation, a more comprehensive OBD system was developed under the direction of CARB called OBD II.

OBD II, which was phased in the 1994 through 1996 model years, added catalyst efficiency monitoring, engine misfire detection, evaporative system monitoring, secondary air system monitoring, and

EGR system flow rate monitoring. Additionally, a serial data stream consisting of twenty basic data parameters and a common system of diagnostic trouble codes was adopted.

The goal of OBD II is to monitor the effectiveness of the major emission control systems and to turn on the Malfunction Indicator Light (MIL) when a malfunction is detected. For example, the ECM diagnostic system monitors the engine cylinder misfire. If the rate of cylinder misfire is out of range, the MIL will illuminate and a DTC will set. In addition, if the ECM detects misfire conditions severe enough to damage the catalytic converter the MIL will blink.

The ECM diagnostic system monitors malfunctions in the powertrain that either provides input to (directly or indirectly), or receives commands from the ECM. Components or systems are monitored that effect emissions output. These monitors are designed to detect malfunctions in the powertrain and report when there is a system or component failure.

OBD II Standardization

OBD regulations and technical standards have been developed with the cooperation of the automotive industry and the Society of Automotive Engineers (SAE). A number of applicable SAE J standards were developed to implement an OBD II plan that was acceptable to all manufacturers. The following list is an example of the areas of standardization:

- ISO 9141, (International Standards Organization) Serial Data Protocol
- J1850, Serial Data Protocol
- J1930, Terms and Definitions
- J1962, Standard OBD II Diagnostic Connector
- J1978, Generic Scan Tool
- J1979, Diagnostic Test Mode and Basic Serial Data Stream
- J2008, Electronic Service Information Access and Data Format
- J2012, Diagnostic Codes and Messages
- J2190, Enhanced Diagnostic Test Modes and Serial Data Streams

Access to all OBD II data is made by connecting an OBD II compatible scan tool to a standardized Data Link Connector (DLC) located under the left side of the instrument panel. The standards for data, the scan tool, diagnostic test modes, diagnostic trouble codes, and everything related to the introduction of the OBD II regulation was established by the Society of Automotive Engineers and adopted by the government and the manufacturers.

NOTE A glossary of SAE J1930 and Lexus terms and definitions can be found in the Introduction section of the Repair Manual.

OBD II Monitors

The goal of the OBD II regulation is to provide the vehicle with an on-board diagnostic system capable of continuously monitoring the efficiency of the emissions, the control system, and to improve diagnosis and repair efficiency when system failures occur.

As an example, OBD II systems test the operation of the oxygen sensor, exhaust gas recirculation system, and so forth, whenever conditions permit. It is the function of the ECM to monitor these systems and components and perform necessary tests to assure that the emission systems are operating properly.

Beginning with the 2000 model year, manufacturers will be required to phase-in diagnostic strategies to monitor the thermostat on vehicles so equipped for proper operation. In addition, beginning with the 2002 model year, manufacturers will begin to phase-in diagnostic strategies to monitor the PCV system on vehicles so equipped for system integrity.

OBD II Malfunction Indicator Light (MIL)

When a malfunction occurs and meets the criteria to set a Diagnostic Trouble Code (DTC), the MIL illuminates and remains illuminated as long as the fault is detected. A DTC is then stored in the ECM memory. The MIL will be turned off after 3 warm-up cycles once normal conditions return.

OBD II Diagnostic Trouble Codes (DTC)

Unlike OBD Diagnostic Trouble Codes, OBD II codes have been standardized by SAE. They indicate the circuit, and the system in which a fault has been detected. Once the condition returns to normal, the DTC remains as an active code for 40 drive cycles. The code will be automatically erased after 40 cycles, but will remain in the ECM history until cleared.

Each DTC is assigned a number to indicate the circuit, component, or system area that was determined to be at fault. The numbers are organized such that different codes related to a particular sensor or system are grouped together.

OBD II Diagnostic Trouble Code Chart

	First Digit	Second Digit	Third Digit	Fourth & Fifth Digit
	Prefix Letter of DTC Indicates Component Group Area	SAE or Controlled 0 = SAE	Powertrain DTC Subgroup	Area or Component Involved
	P = Powertrain	1 = Manufacturer	0 = Total System	
	B= Body		1 = Fuel & Air Metering	
	C = Chassis		2 = Fuel & Air Metering	
	U = Network Communication		3 = Ignition System or Misfire	
			4 = Auxiliary Emission Controls	
			5 = Speed, Idle & Auxiliary Inputs	
			6 = ECM & Auxiliary Inputs	
			7 = Transmission	
Example			8 = Transmission	
Fuel Trim Malfunction	**P**	**0**	**1**	**71**

Fig. 1-18

OBD II DTC Freeze Frame

The DTC screen may have additional information available such as freeze frame data and help screens.

Manufacturer Enhanced OBD II

OBD II regulations allow the manufacturer to add additional information to the data stream and DTCs. A "1" in the second digit of the DTC code indicates it is a manufacturer specific DTC. Lexus has an enhanced data stream, which consists of 60 or more additional data words. As new systems are created, additional data is added to the data stream.

OBD	OBD II
Current related checks (open or short)	Circuit continuity and out of range values monitored
Limited system monitoring (A/F & EGR)	Systems monitored
Minimal use of rationality checks	Rationality checks used (logic)
Limited DTCs	Expanded DTCs
Limited use of Serial Data	Freeze Frame Data stored with DTC
System and component names not standardized	Serial Data required
DTCs not standardized	Active Tests
MIL will turn off if problem corrects itself	Standards established
DTC must be cleared from memory	MIL stays on until 3 consecutive trips have passed without the problem re-occurring
	DTC erased after 40 warm-up cycles
	OBD II can detect malfunctions that do not effect driveability

Fig. 1-19

Inputs - Sensors

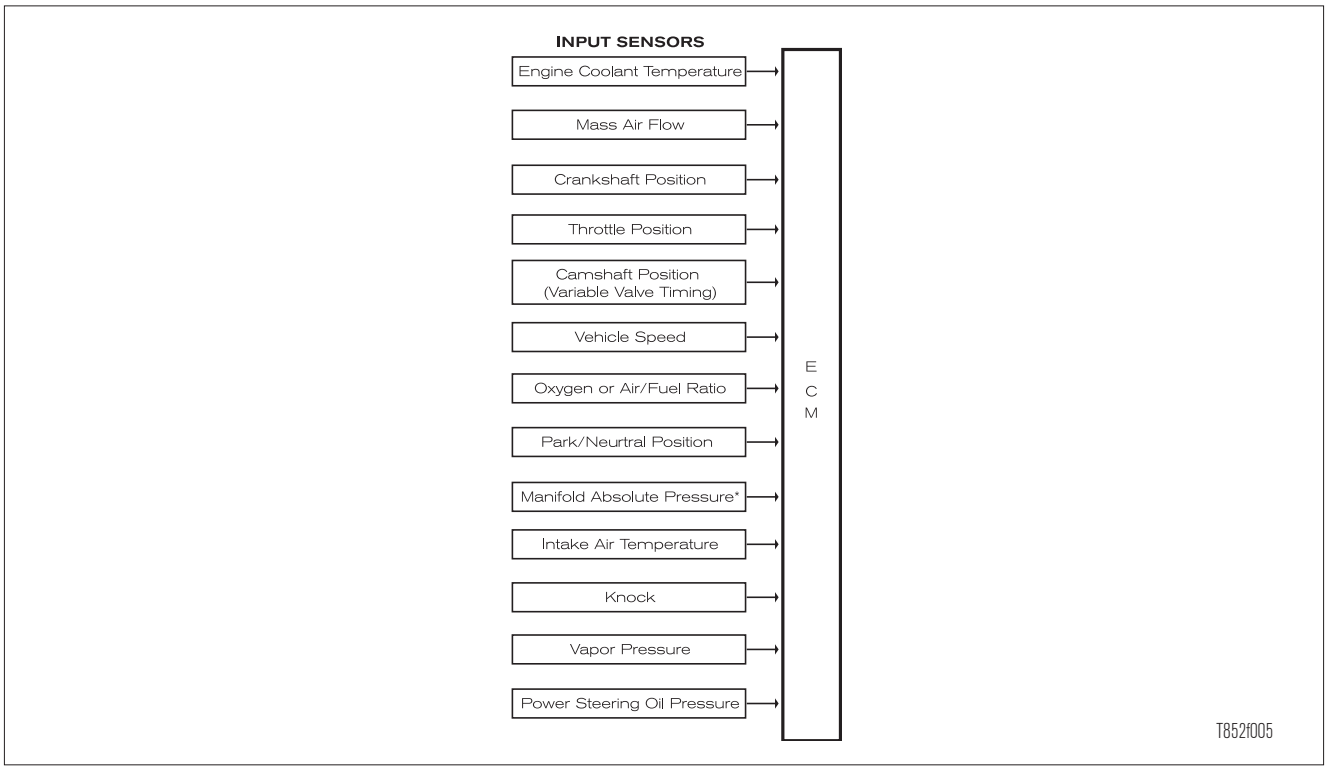

Lesson Objectives

1. Determine the condition of input sensors and circuit based on their signal output
2. Determine the root cause of the failure(s) using appropriate diagnostic procedures

Notes

Inputs - Sensors

Position/Mode Sensors and Switches

For many components, it is important that the ECM know the position and/or mode of the component. A switch is used as a sensor to indicate a position or mode. The switch may be on the supply side or the ground side of a circuit.

Power Side Switch

On a power side switch, with the switch open, there is no voltage at the ECM.

Fig. 2-01
L852f019

Switch Closed

With the switch closed, voltage is present at the ECM.

Fig. 2-02
L852f020

Power Side Switch Circuit

A power side switch is a switch located between the power supply and load. Sometimes the power side switch is called hot side switch because it is located on the hot side, that is, before the load, in a circuit. The Stop Lamp switch is a good example. When the brake pedal is depressed, the Stop Lamp switch closes sending battery voltage to the ECM. This signals the ECM that the vehicle is braking.

The following switches act as switches for the ECM. Usually, they are power side switches. Note in the figure(s) their location between the battery and ECM. Many switches that commonly use battery voltage as the source are:

- Ignition Switch
- Park/Neutral Switch
- Transfer Low Position Detection Switch
- Transfer Neutral Position Detection Switch
- Transfer 4WD Detection Switch

Stop Lamp Switch

The ECM receives a voltage signal when the brake pedal is depressed.

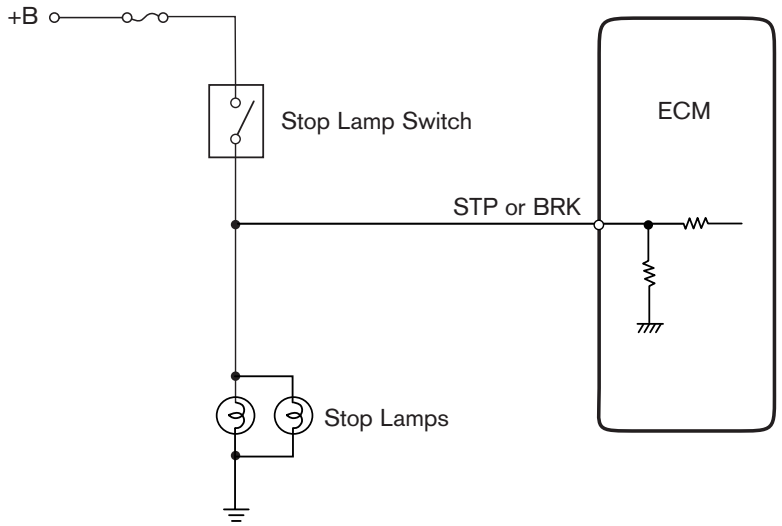

Fig. 2-03
T852f021

DVOM Check

A DVOM will measure 0 volts with the switch open.

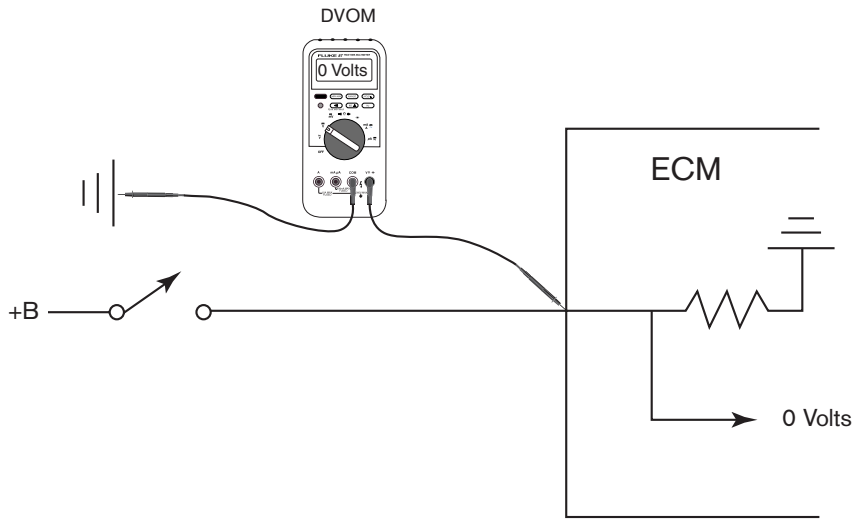

Fig. 2-04
L852f022

DVOM Check

Here the DVOM reads supply voltage when the switch closes. This indicates to the ECM a change has taken place. Using the DVOM confirms the circuit and switch are good.

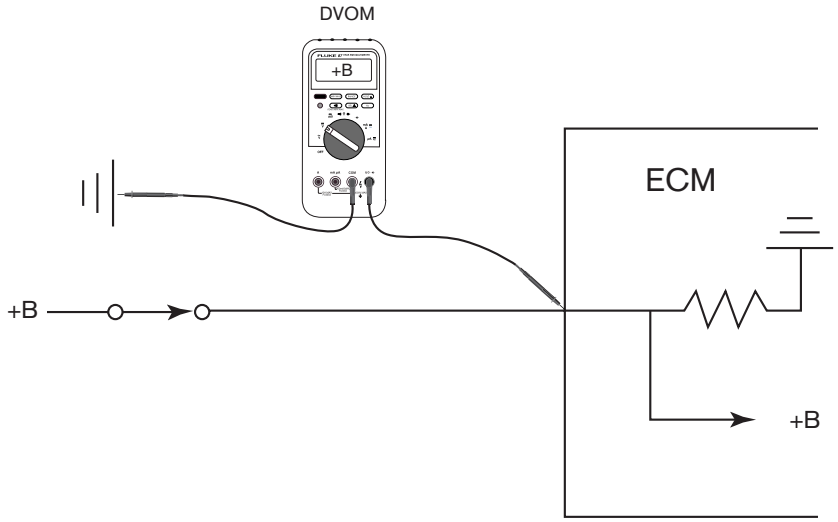

Fig. 2-05
L852f023

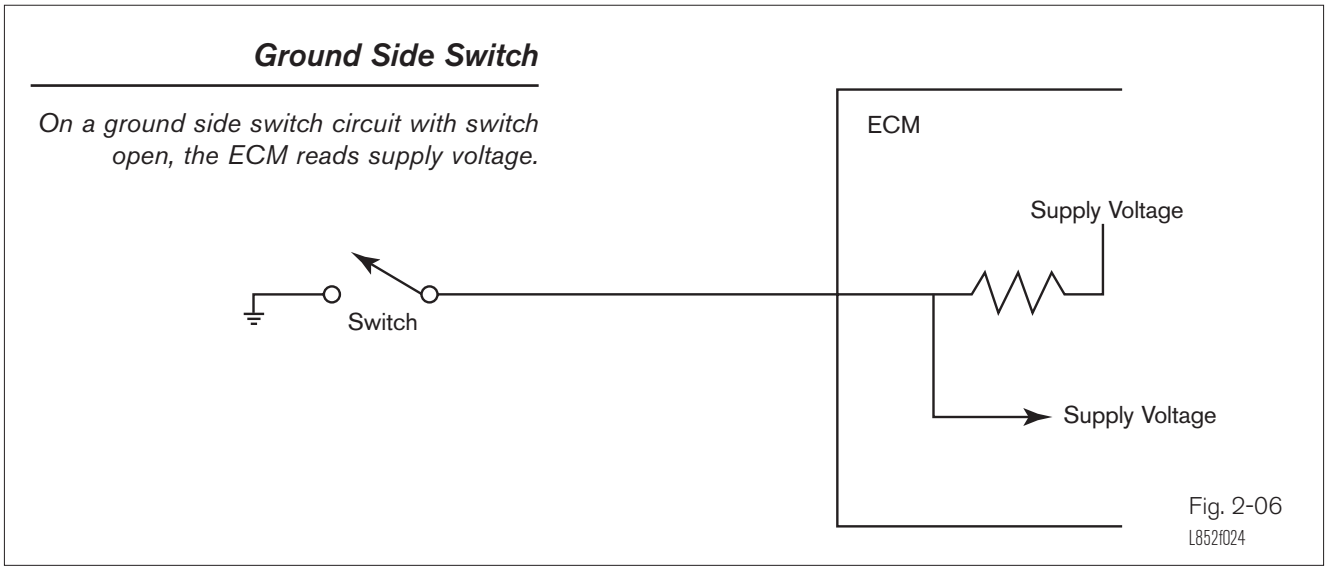

Fig. 2-06
L852f024

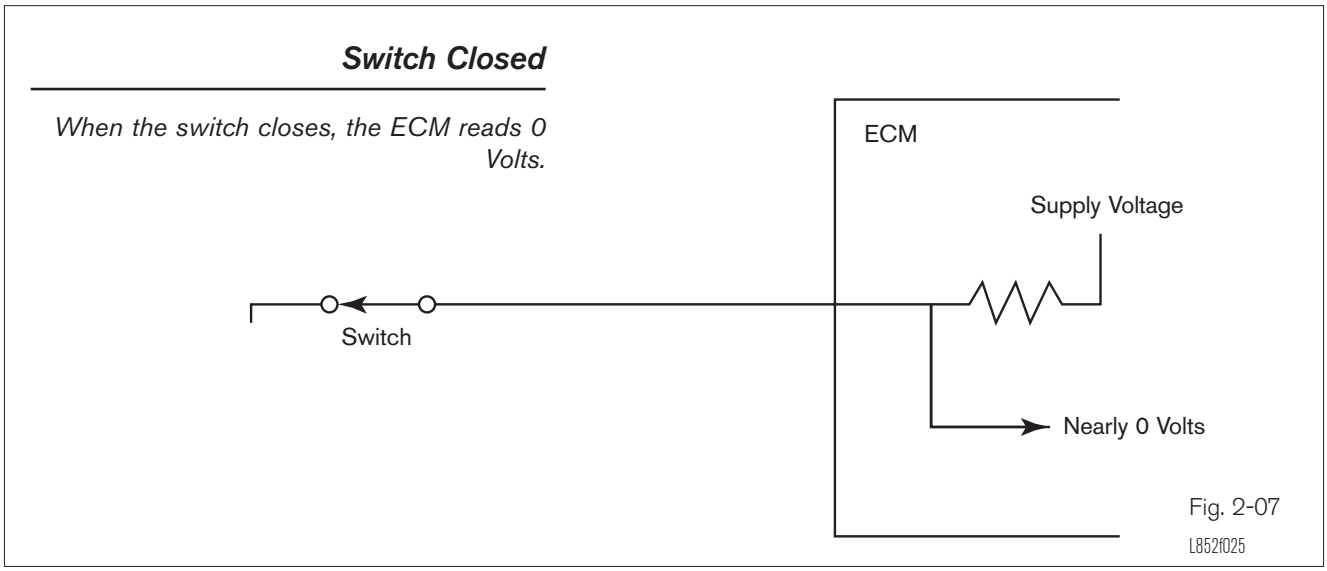

Fig. 2-07
L852f025

Ground Side Switch Circuit

A ground side switch is located between the load and ground in a circuit. Inside the ECM there is resistor (load) connected in series to the switch. The ECM measures the available voltage between the resistor and switch. When the switch is open, the ECM reads supply voltage. When the switch is closed, voltage is nearly zero.

The following switches are typically found on the ground side of the circuit:

- TPS Idle Contact Switch uses a 12 volt reference voltage from the ECM (IDL signal)
- Power Steering Pressure Switch
- Overdrive Switch

DVOM Check

A DVOM will measure supply voltage when the switch is open.

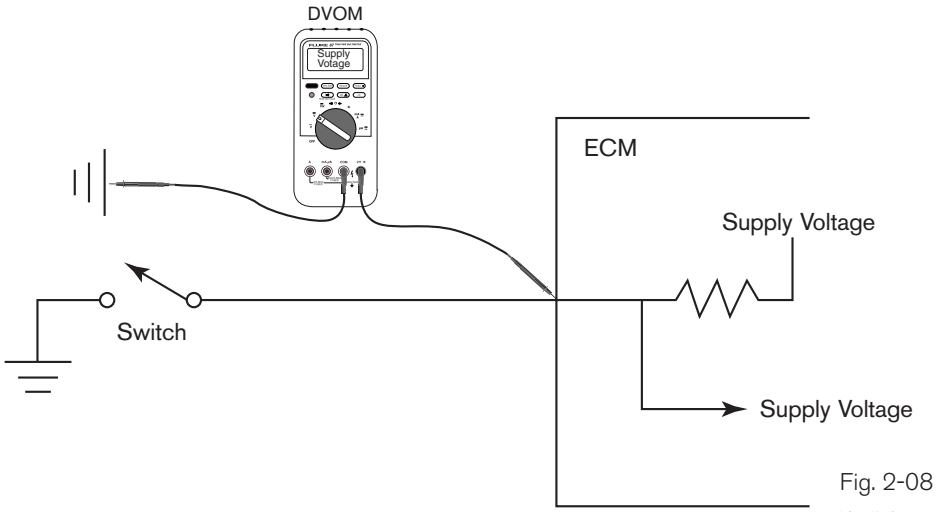

Fig. 2-08
L852f026

DVOM Check

When the switch closes, the DVOM measures nearly 0 Volts. Using the DVOM confirms the circuit is good.

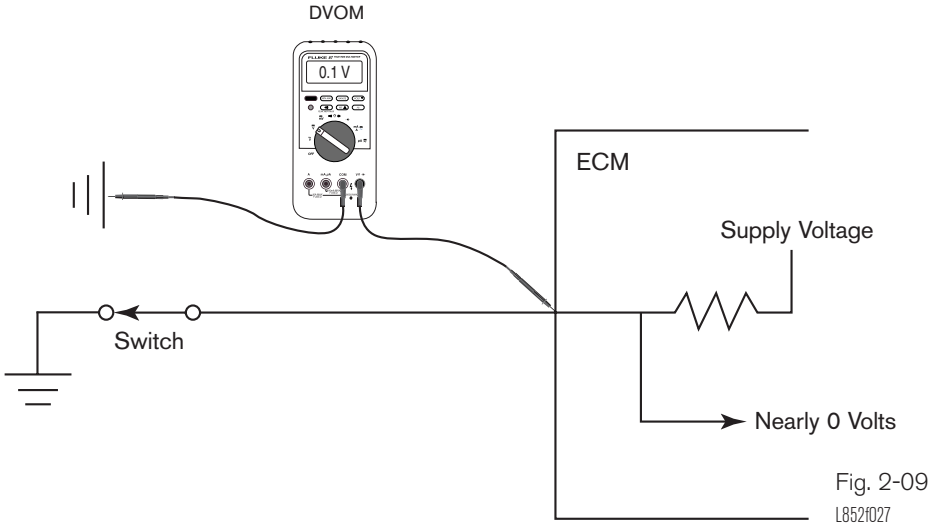

Fig. 2-09
L852f027

STA Mode

When the ignition switch is turned to the Start position, battery voltage is applied to the STA terminal. This drawing is a general representation, there are many variations.

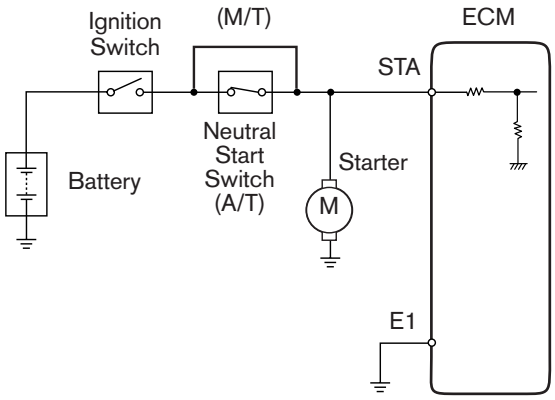

Fig. 2-10
T852f028

Electrical Load Signal

The ELS circuit signals the ECM when a significant electrical load has been placed on the charging system, such as when the defogger or tail lamp circuit is on.

The ELS signal will be low when both circuits are off. If either circuit or both circuits are on, the ELS signal goes to battery voltage. The diodes are used to isolate the circuit.

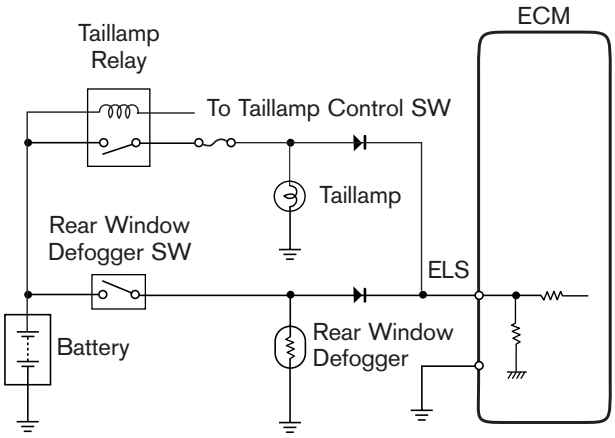

Fig. 2-11

T852f029

A/C Signal

The A/C signal is used by the ECM to stabilize the idle speed, modify ignition timing, and modify deceleration fuel cut parameters when the compressor is running. In the event the signal malfunctions, idle quality may suffer and driveability during deceleration could be affected.

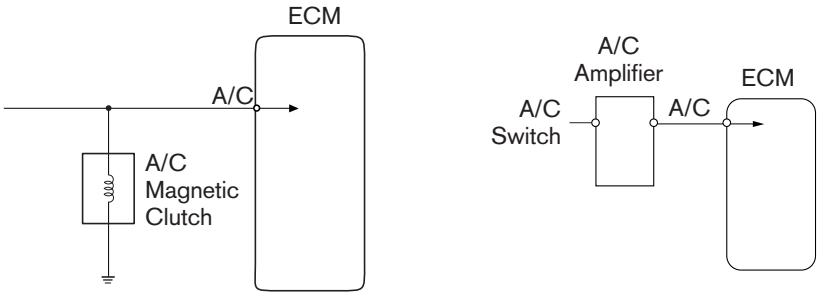

Fig. 2-12

T852f030/T852f031

Overdrive Circuit

The O/D circuit is a ground side switched circuit. When the switch is turned on, overdrive is cancelled and the light illuminates.

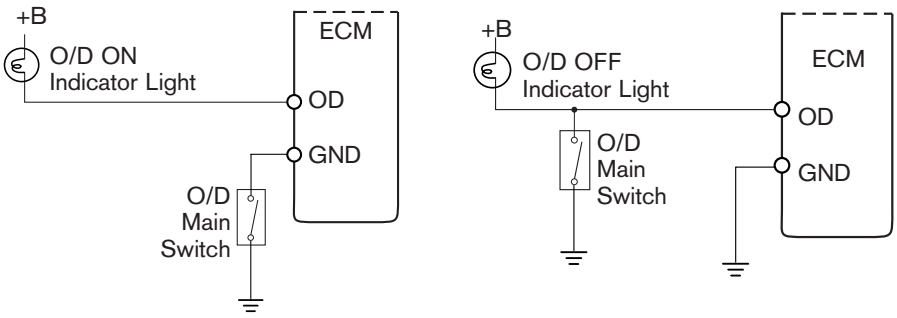

Fig. 2-13

T852f032/T852f349

Temperature Sensors

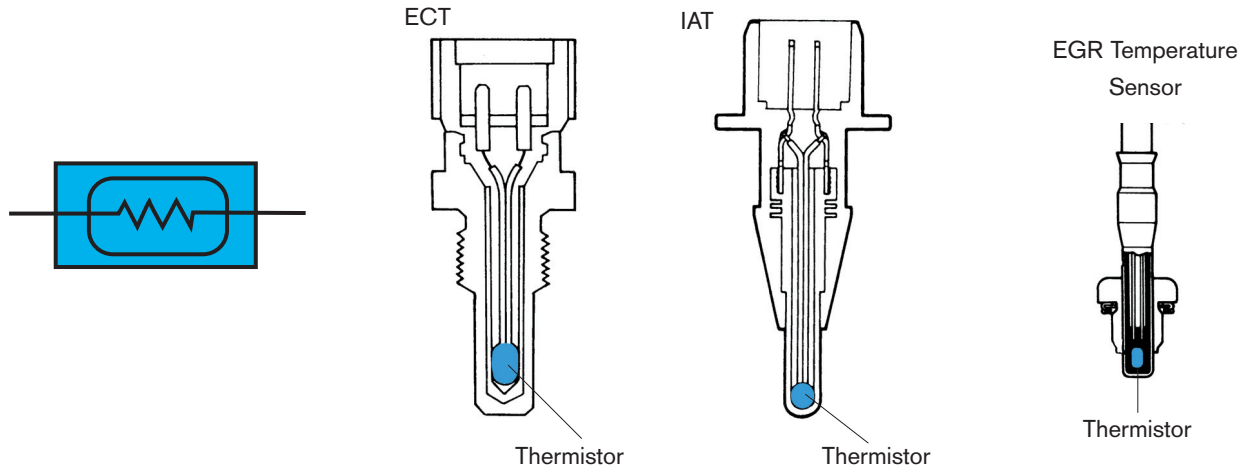

Fig. 2-14

T852f033/T852f034
T852f035/T852f036

Temperature Sensors

The ECM needs to adjust a variety of systems based on temperatures. It is critical for proper operation of these systems that the engine reach operating temperature and the temperature is accurately signaled to the ECM. For example, for the proper amount of fuel to be injected the ECM must know the correct engine temperature. Temperature sensors measure Engine Coolant Temperature (ECT), Intake Air Temperature (IAT) and Exhaust Gas Recirculation (EGR), etc.

ECT Circuit

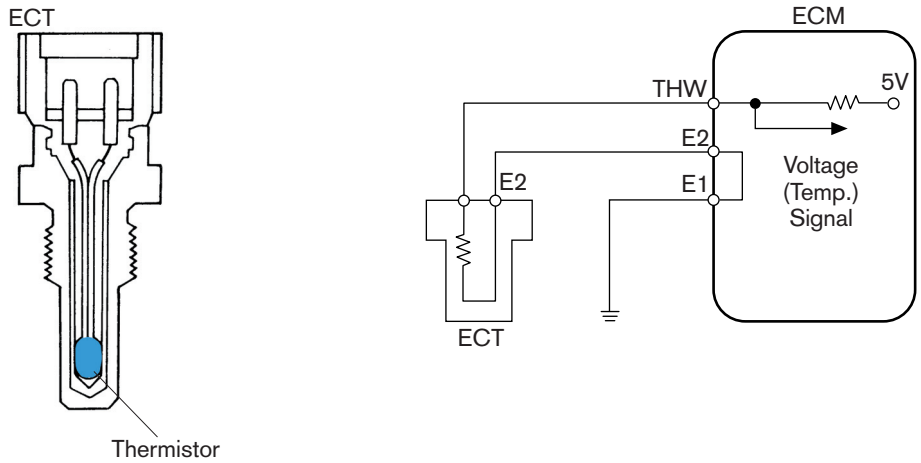

Fig. 2-15

T852f034/T852f037

Engine Coolant Temperature (ECT) Sensor

The ECT responds to change in engine coolant temperature. By measuring engine coolant temperature, the ECM knows the average temperature of the engine. The ECT is usually located in a coolant passage just before the thermostat. The ECT is connected to the THW terminal on the ECM.

The ECT sensor is critical to many ECM functions such as fuel injection, ignition timing, variable valve timing, transmission shifting, etc. Always check to see if the engine is at operating temperature and that the ECT is accurately reporting the temperature to the ECM.

IAT Circuit

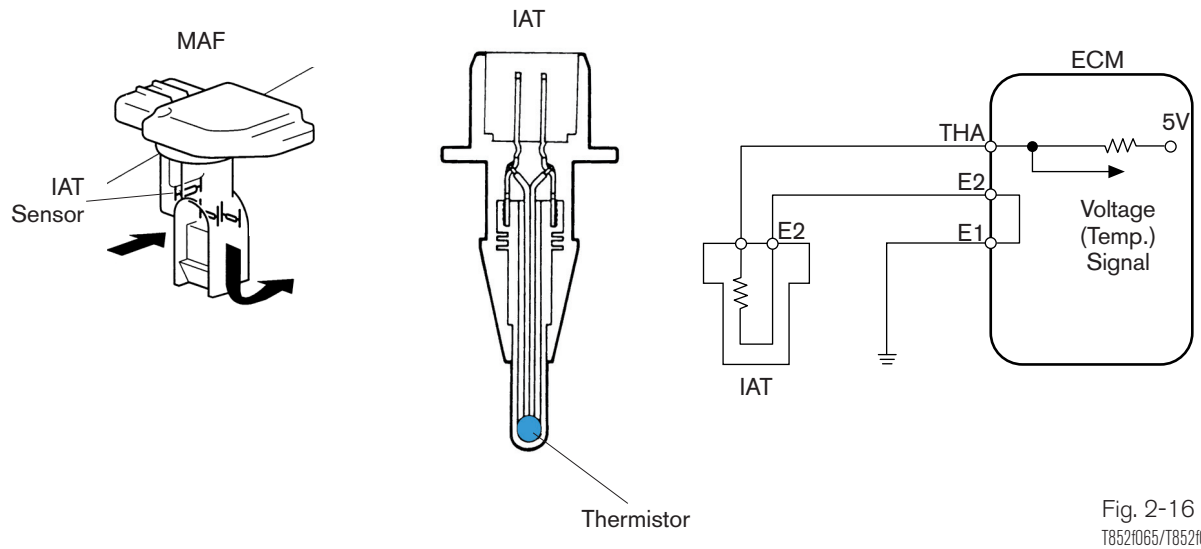

Fig. 2-16
T852f065/T852f035
T852f038

Intake Air Temperature (IAT) Sensor

The IAT detects the temperature of the incoming air stream. On vehicles equipped with a MAP sensor, the IAT is located in an intake air passage. On Mass Air Flow sensor equipped vehicles, the IAT is part of the MAF sensor. The IAT is connected to the THA terminal on the ECM. The IAT is used for detecting ambient temperature on a cold start and intake air temperature as the engine heats up the incoming air.

NOTE

One strategy the ECM uses to determine a cold engine start is by comparing the ECT and IAT signals. If both are within 8°C (15°F) of each other, the ECM assumes it is a cold start. This strategy is important because some diagnostic monitors, such as the EVAP monitor, are based on a cold start.

EGR Temperature Circuit

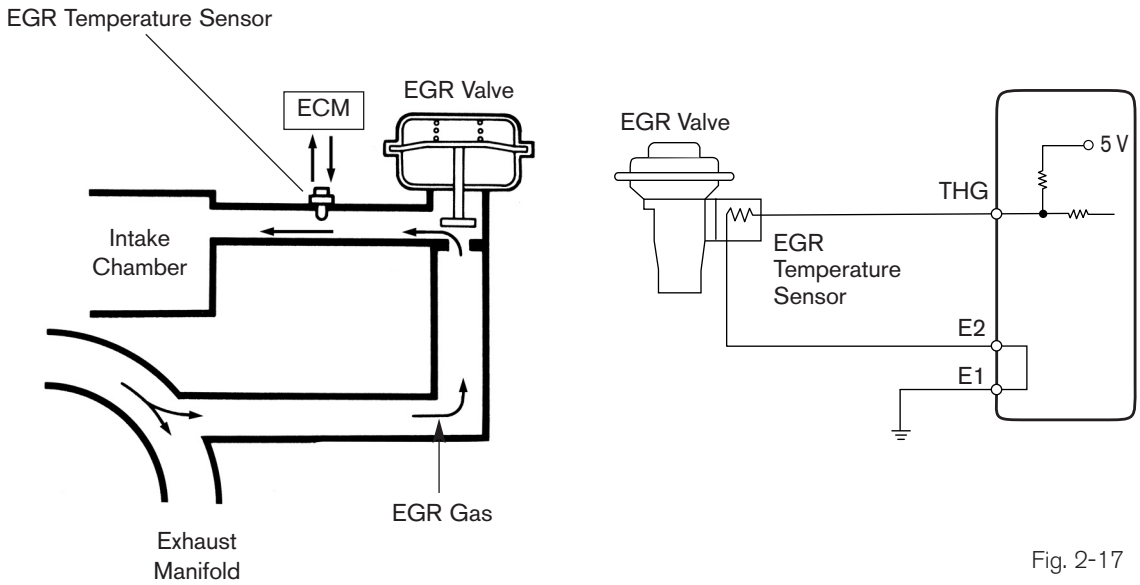

Fig. 2-17

T852f039/T852f040

Temperature Graph

As temperature increases, sensor resistance and the voltage signal decreases. Note that at the upper end of the temperature/resistance scale, ECT resistance changes very little.

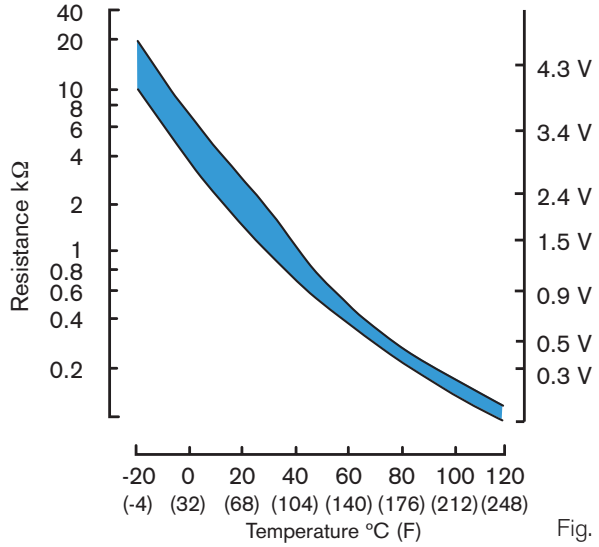

Fig. 2-18

T852f041

Exhaust Gas Recirculation (EGR) Temperature Sensor

The EGR Temperature Sensor is located in the EGR passage and measures the temperature of the exhaust gases. The EGR Temp sensor is connected to the THG terminal on the ECM. When the EGR valve opens, temperature increases. From the increase in temperature, the ECM knows the EGR valve is open and that exhaust gases are flowing.

ECT, IAT, & EGR Temperature Sensor Operation

Though these sensors are measuring different things, they all operate in the same way. From the voltage signal of the temperature sensor, the ECM knows the temperature. As the temperature of the sensor heats up, the voltage signal decreases. The decrease in the voltage signal is caused by the decrease in resistance. The change in resistance causes the voltage signal to drop.

The temperature sensor is connected in series to a fixed value resistor. The ECM supplies 5 volts to the circuit and measures the change in voltage between the fixed value resistor and the temperature sensor.

When the sensor is cold, the resistance of the sensor is high, and the voltage signal is high. As the sensor warms up, the resistance drops and voltage signal decreases. From the voltage signal, the ECM can determine the temperature of the coolant, intake air, or exhaust gas temperature.

The ground wire of the temperature sensors is always at the ECM, usually terminal E2. These sensors are classified as thermistors.

Temperature Sensor Diagnostics

Temperature sensor circuits are tested for:

- opens
- shorts
- available voltage
- sensor resistance

The Diagnostic Tester data list can reveal the type of problem. An open circuit (high resistance) will read the coldest temperature possible. A shorted circuit (low resistance) will read the highest temperature possible. The diagnostic procedure purpose is to isolate and identify the temperature sensor from the circuit and ECM.

High resistance in the temperature circuit will cause the ECM to think that the temperature is colder than it really is. For example, as the engine warms up, ECT resistance decreases, but unwanted extra resistance in the circuit will produce a higher voltage drop signal. This will most likely be noticed when the engine has reached operating temperatures. Note that at the upper end of the temperature/resistance scale, ECT resistance changes very little. Extra resistance in the higher temperature can cause the ECM to think the engine is approximately 20°F ≈ 30°F colder than actual temperature. This will cause poor engine performance, fuel economy, and possibly engine overheating.

Solving Open Circuit Problems

A jumper wire and Diagnostic Tester are used to locate the problem in an open circuit.

Open Circuit Test at Sensor

A jumper wire is inserted in the circuit as shown in the Repair Manual; the temperature should go high (hot). If it does, the circuit and the ECM must be good, and the temperature sensor or connector is at fault.

If the temperature did not go high (hot), then the problem is with the circuit or ECM.

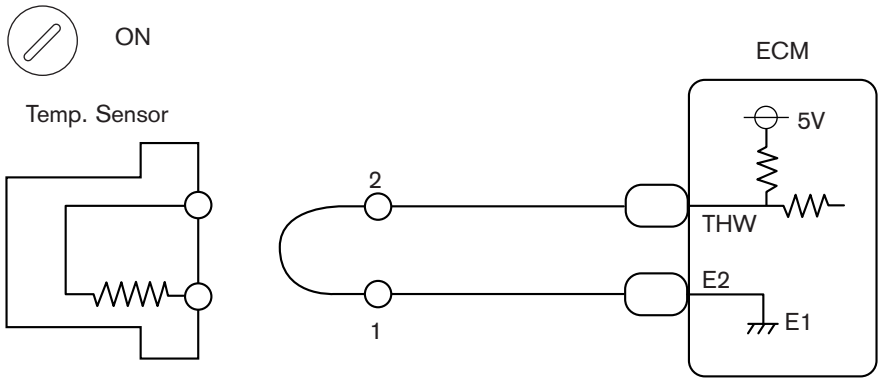

Fig. 2-19

T852f042

Open Circuit Test at ECM

To isolate if the problem is with the circuit or the ECM, a jumper wire is inserted between the temperature (such as THW) terminal and ground (E2), and the temperature should go high. If it does, the problem is in the circuit. If it did not go high, the fault is either in the connection or ECM.

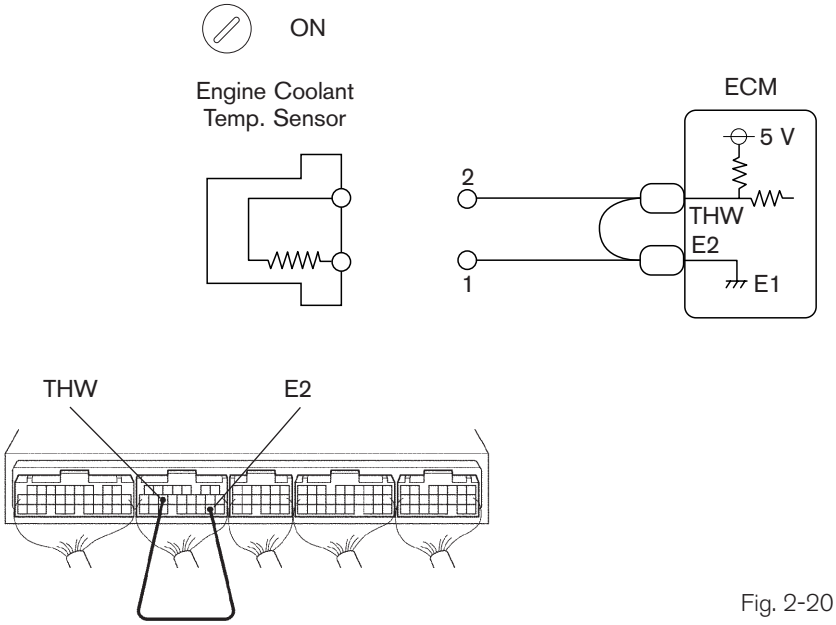

Fig. 2-20

T852f043/T852f044

Solving Shorted Circuit Problems

Creating an open circuit at different points in the temperature circuit will isolate the short. The temperature reading should go extremely low (cold) when an open is created.

Short Circuit Testing

To confirm if the circuit or ECM is at fault, first disconnect the connector at the ECM. Temperature should go low (cold). If it does, the harness or connector is at fault. If not, the problem is with the ECM.

Disconnecting the connector at the ECT should cause the temperature reading to go low (cold). If it does, the problem is in the sensor. If not, the problem is in the circuit harness.

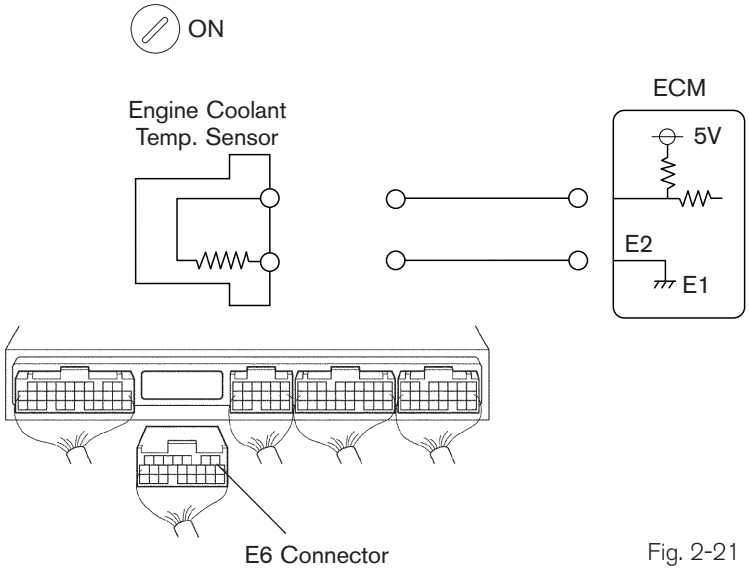

Fig. 2-21

T852f045/T852f046

Temperature Sensor Component Testing

A temperature sensor is tested for accuracy by comparing the resistance of the sensor to the actual temperature. The RM contains the procedure and specifications. To insure accuracy, you must have an accurate thermometer and good electrical connections to the DVOM.

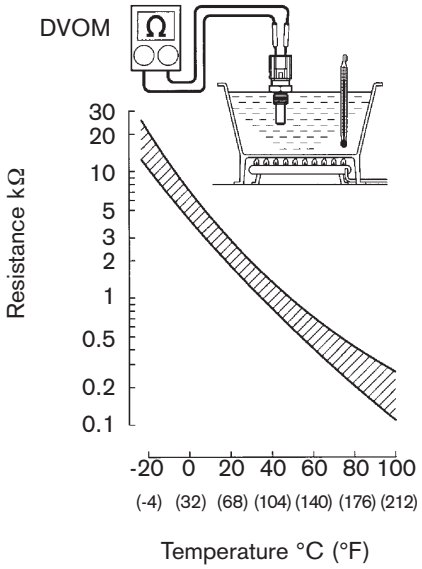

Fig. 2-22

T852f047

Position Sensor

As the wiper arm moves the signal voltage output changes. From this voltage, the ECM is able to determine position.

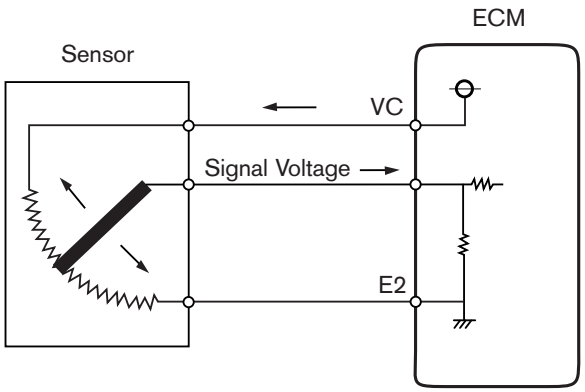

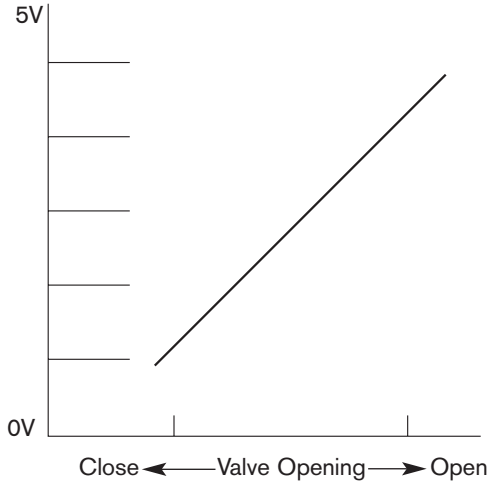

Fig. 2-23

T852f048/T852f049

Position Sensors

In many applications, the ECM needs to know the position of mechanical components. The Throttle Position Sensor (TPS) indicates position of the throttle valve. Accelerator Pedal Position (APP) sensor indicates position of the accelerator pedal. Exhaust Gas Recirculation (EGR) Valve Position Sensor indicates position of the EGR Valve. The vane air flow meter uses this principle.

Electrically, these sensors operate the same way. A wiper arm inside the sensor is mechanically connected to a moving part, such as a valve or vane. As the part moves, the wiper arm also moves. The wiper arm is also in contact with a resistor. As the wiper arm moves on the resistor, the signal voltage output changes. At the point of contact the available voltage is the signal voltage and this indicates position. The closer the wiper arm gets to VC voltage, the higher the signal voltage output. From this voltage, the ECM is able to determine the position of a component.

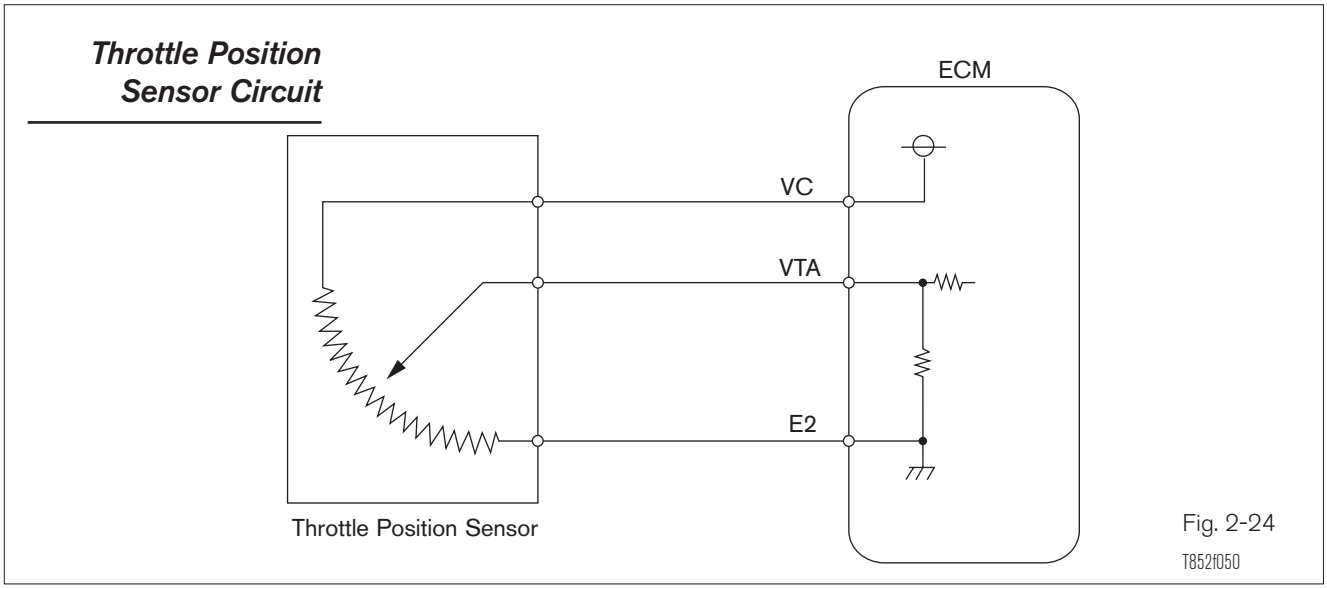

Fig. 2-24

Throttle Position Sensor

The TPS is mounted on the throttle body and converts the throttle valve angle into an electrical signal. As the throttle opens, the signal voltage increases.

The ECM uses throttle valve position information to know:

- engine mode: idle, part throttle, wide open throttle.
- when to switch off AC and emission controls at Wide Open Throttle (WOT).
- air-fuel ratio correction.
- power increase correction.
- fuel cut control.

The basic TPS requires three wires. Five volts are supplied to the TPS from the VC terminal of the ECM. The TPS voltage signal is supplied to the VTA terminal. A ground wire from the TPS to the E2 terminal of the ECM completes the circuit.

At idle, voltage is approximately 0.6 - 0.9 volts on the signal wire. From this voltage, the ECM knows the throttle plate is closed. At wide open throttle, signal voltage is approximately 3.5 - 4.7 volts.

Inside the TPS is a resistor and a wiper arm. The arm is always contacting the resistor. At the point of contact, the available voltage is the signal voltage and this indicates throttle valve position. At idle, the resistance between the VC (or VCC) terminal and VTA terminal is high, therefore, the available voltage is approximately 0.6 - 0.9 volts. As the contact arm moves closer the VC terminal (the 5 volt power voltage), resistance decreases and the voltage signal increases.

TPS With Idle Contact Switch Circuit

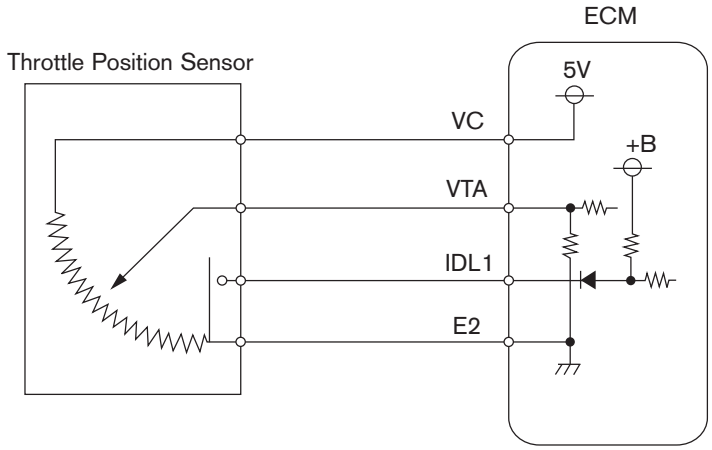

Fig. 2-25
T852f051

TPS With IDL

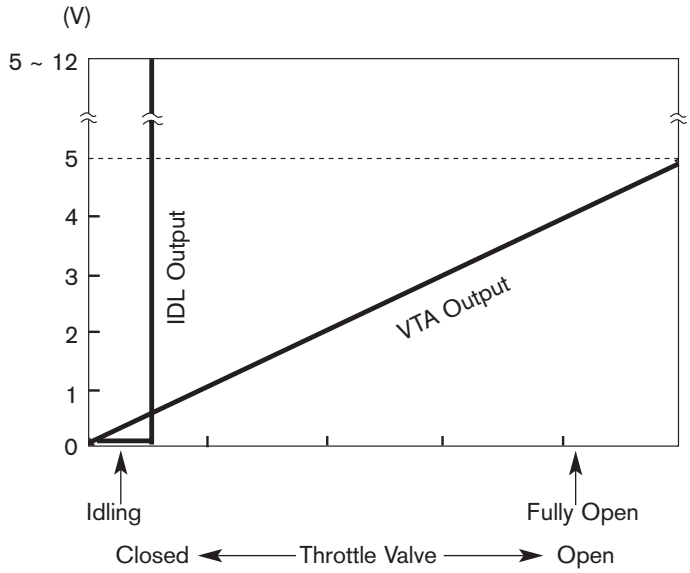

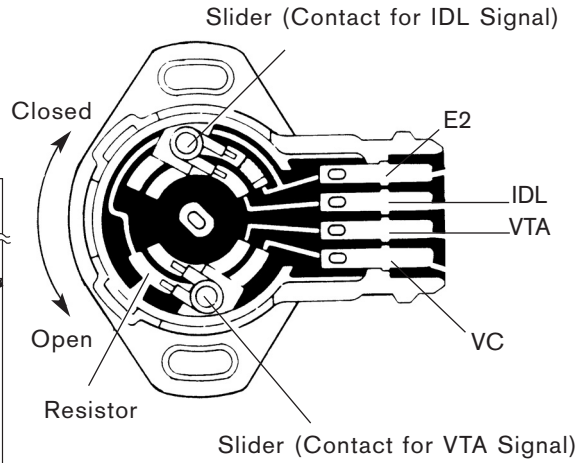

Fig. 2-26
T852f053/T852f052

Some TPS incorporate a Closed Throttle Position switch (also called an idle contact switch). This switch is closed when the throttle valve is closed. At this point, the ECM measures 0 volts and there is 0 volts at the IDL terminal. When the throttle is opened, the switch opens and the ECM reads +B voltage at the IDL circuit.

TPS in the ETCS-i System

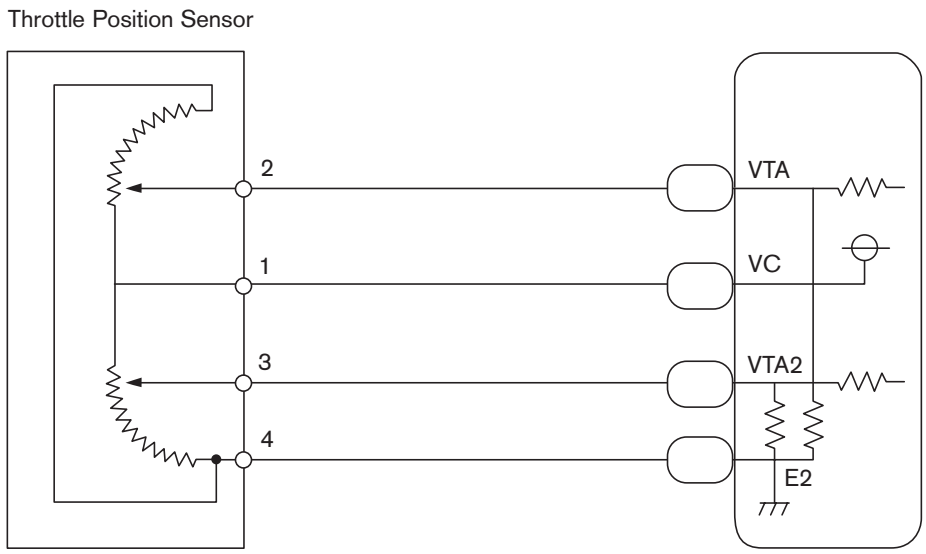

Fig. 2-27

T852f054

The TPS on the ETCS-i system has two contact arms and two resistors in one housing. The first signal line is VTA and the second signal line is VTA2.

TPS Signal Voltages

Note that VTA2 reaches its upper limit earlier than VTA.

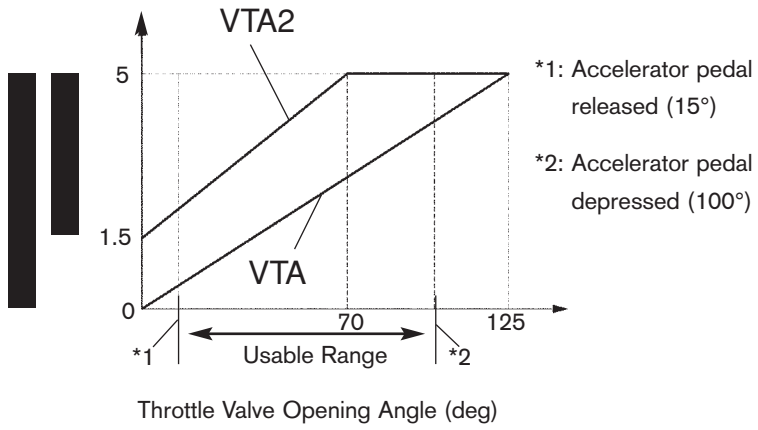

Fig. 2-28

T852f055

VTA2 works the same, but starts at a higher voltage output and the voltage change rate is different from VTA. As the throttle opens the two voltage signals increase at a different rate. The ECM uses both signals to detect the change in throttle valve position. By having two sensors, ECM can compare the voltages and detect problems.

Accelerator Pedal Position (APP) Sensor

The APP sensor is mounted on the throttle body of the ETCS-i. The APP sensor converts the accelerator pedal movement and position into two electrical signals. Electrically, the APP is identical in operation to the TPS.

EGR Valve Position Sensor

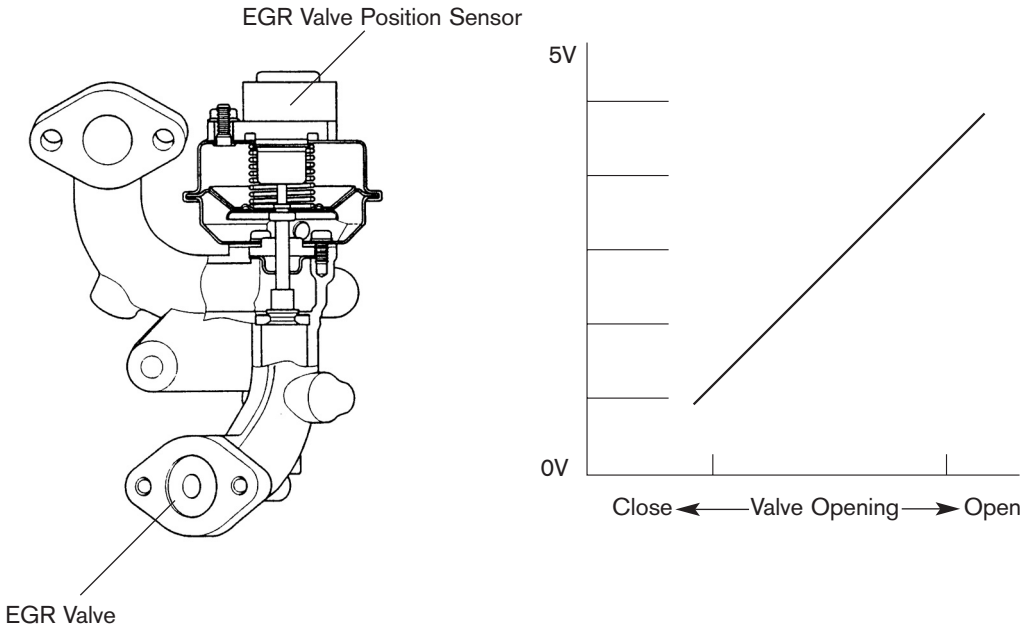

Fig. 2-29

T852f056/T852f049

EGR Valve Position Sensor

The EGR Valve Position Sensor is mounted on the EGR valve and detects the height of the EGR valve. The ECM uses this signal to control EGR valve height. The EGR Valve Position Sensor converts the movement and position of the EGR valve into an electrical signal. Operation is identical to the TPS except that the signal arm is moved by the EGR valve.

Position Sensor Diagnostics

The following explanations are to help you with the diagnostic procedures in the Repair Manual.

Diagnostic Tester

Comparing the position of the sensor to Diagnostic Tester data is a convenient way of observing sensor operation. For example, with the TPS, the lowest percentage measured with Key On/Engine Off is with the throttle valve at its minimum setting, and the highest percentage will be at Wide Open Throttle.

Checking Supply Voltage Between Terminal VC and Body Ground

Disconnecting the sensor connector and measuring the voltage at the VC terminal you should get about 5 volts. If you get this reading it confirms that the wire is good and ECM is providing the correct voltage. If not, the problem may be with the circuit or ECM.

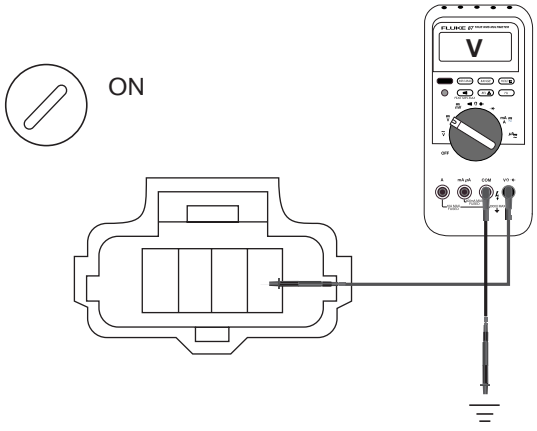

Fig. 2-30
T852f057

Check Voltage Between Terminals VC and E2 of ECM Connector

This test confirms that the ECM is putting out the necessary supply voltage. You would do this test if you did not measure 5 volts at the VC terminal at the TPS connector. If you get 5 volts at the ECM connector, the problem is in the harness. If you did not get 5 volts, the ECM is at fault.

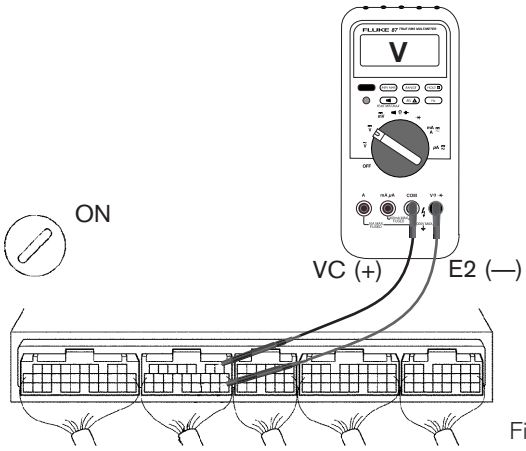

Fig. 2-31
T852f058

Inspect Throttle Position Sensor On some models, you will find TPS checks in the Throttle Body on Vehicle Inspection in the SF Section.

TPS Resistance Check

A DVOM is used to measure the resistance of the sensor at the specified terminal location.

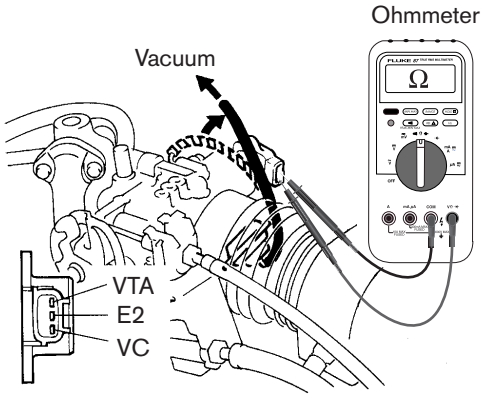

Fig. 2-32
T852f059

TPS Total Resistance Check

This resistance test is measuring total resistance.

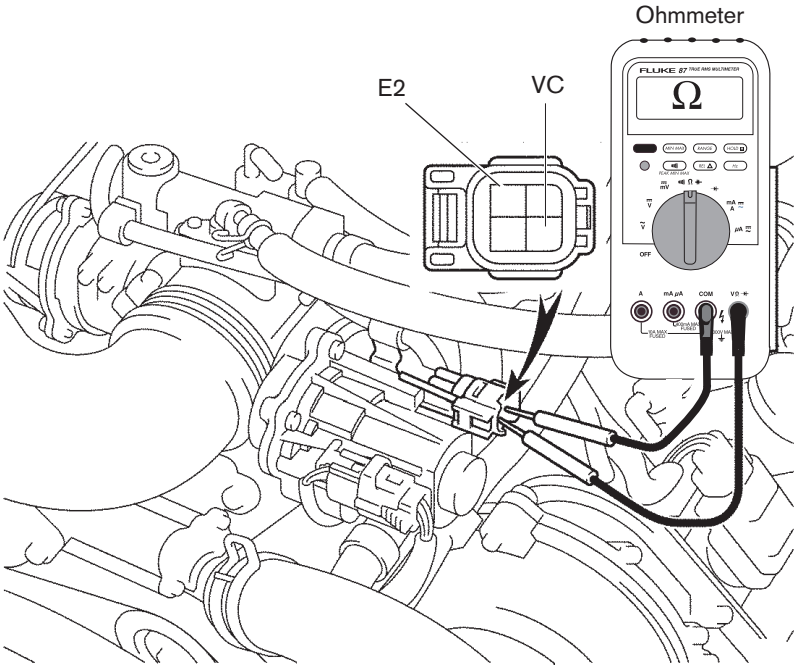

Fig. 2-33

T852f060

Check Voltage Between Terminals VTA and E2 of ECM Connector

This test is to determine if the circuit or the ECM is at fault. If voltage readings are in specifications, the ECM may be at fault. (Intermittent problems in the circuit or sensor may also be the problem.) If voltage readings are not in specifications, there is an open or short in the harness and connector between ECM and TPS on the VTA or E2 line.

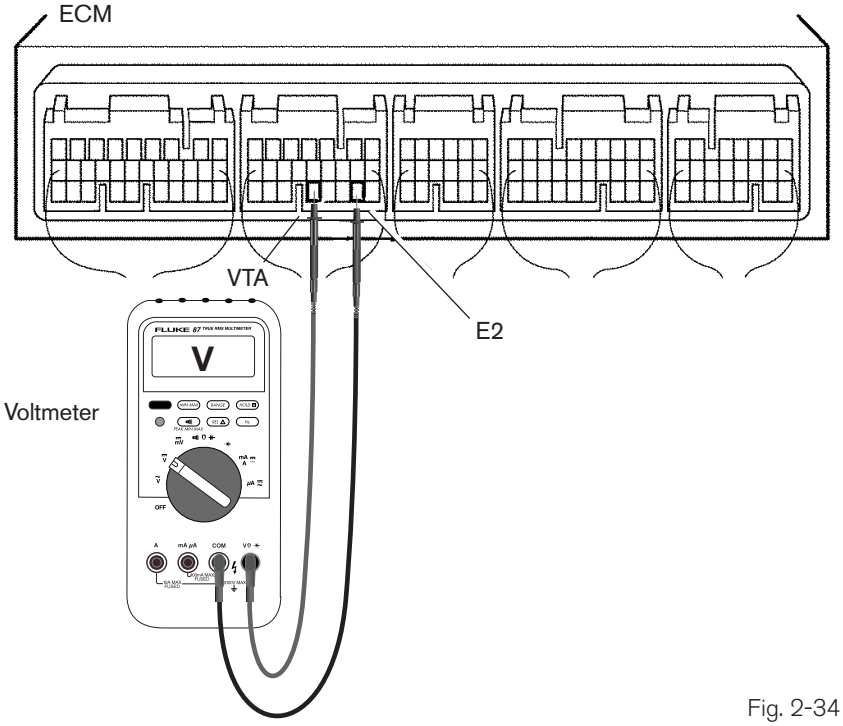

Fig. 2-34

T852f061

Air Flow Sensor

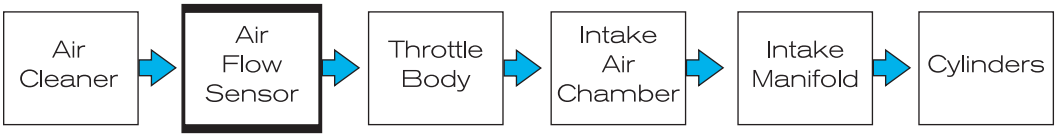

Fig. 2-35
T852f062

Mass Air Flow (MAF) Sensors

The Mass Air Flow Sensors converts the amount of air drawn into the engine into a voltage signal. The ECM needs to know intake air volume to calculate engine load. This is necessary to determine how much fuel to inject, when to ignite the cylinder, and when to shift the transmission. The air flow sensor is located directly in the intake air stream, between the air cleaner and throttle body where it can measure incoming air.

There are different types of Mass Air Flow sensors. The vane air flow meter and Karman vortex are two older styles of air flow sensors and they can be identified by their shape. The newer, and more common is the Mass Air Flow (MAF) sensor.

Hot Wire MAF Sensor

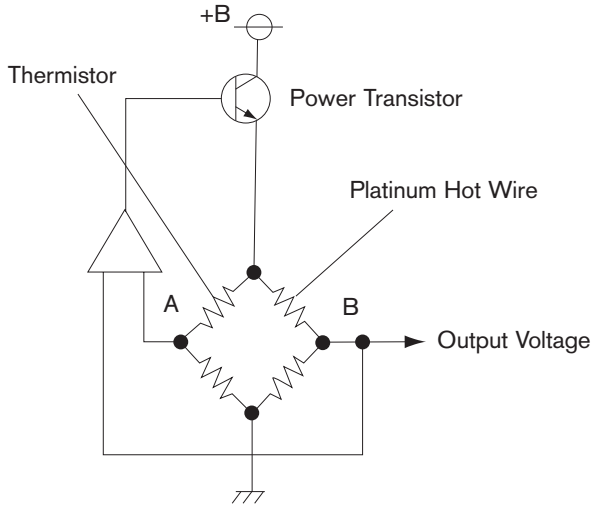

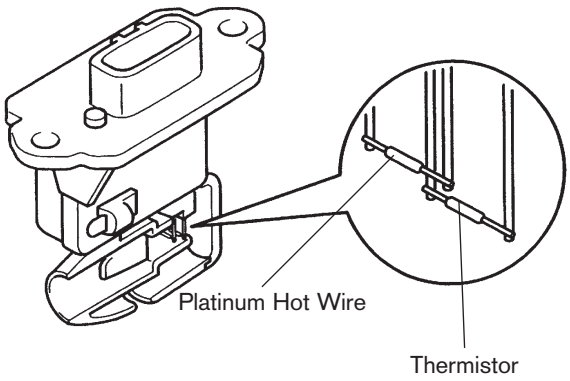

Fig. 2-36
T852f063/T852f064

Mass Air Flow Sensor: Hot Wire Type

The primary components of the MAF sensor are a thermistor, a platinum hot wire, and an electronic control circuit.

The thermistor measures the temperature of the incoming air. The hot wire is maintained at a constant temperature in relation to the thermistor by the electronic control circuit. An increase in air flow will

cause the hot wire to lose heat faster and the electronic control circuitry will compensate by sending more current through the wire. The electronic control circuit simultaneously measures the current flow and puts out a voltage signal (VG) in proportion to current flow.

MAF Sensor Signal Voltage

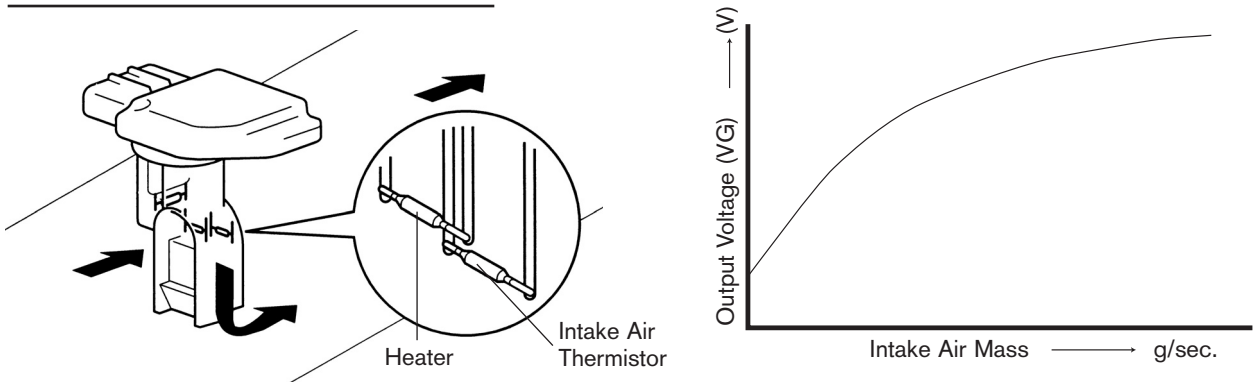

Fig. 2-37

T852f065/T852f066

This type of MAF sensor also has an Intake Air Temperature (IAT) sensor as part of the housing assembly. Its operation is described in the IAT section of Temperature Sensors. When looking at the EWD, there is a ground for the MAF sensor and a ground (E2) for the IAT sensor.

MAF Sensor Circuit

Note that the EFI relay feeds the MAF sensor battery voltage. The MAF has a ground just for the MAF sensor portion.

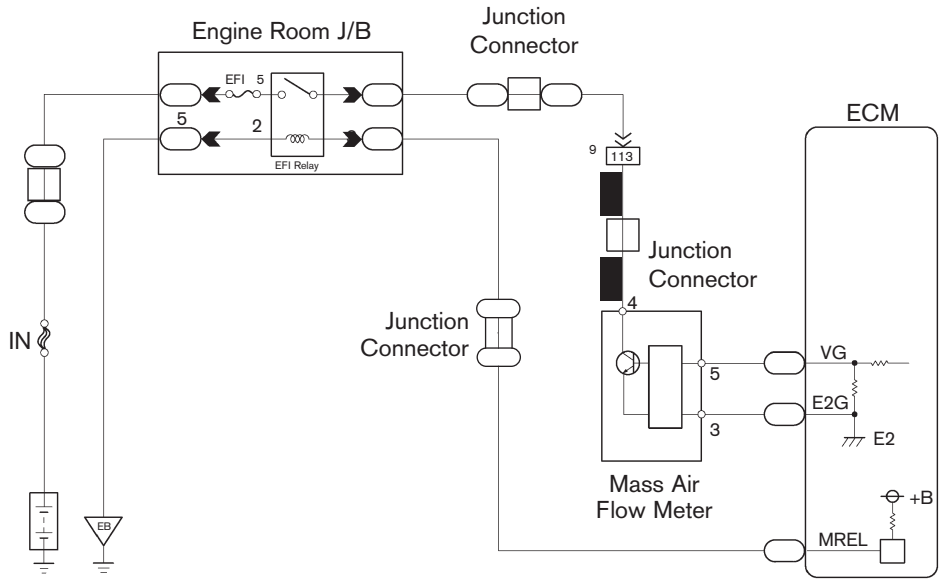

Fig. 2-38

T852f067

Diagnosis

Diagnosis of the MAF sensor involves visual, circuit, and component checks. The MAF sensor passage must be free of debris to operate properly. If the passage is plugged, the engine will usually start, but run poorly or stall and may not set a DTC.

MAF Supply Voltage

The +B terminal supplies voltage for the MAF Sensor. VG is the MAF signal line and E2G is the ground. THA terminal supplies 5 Volts for the IAT sensor and E2 is the ground.

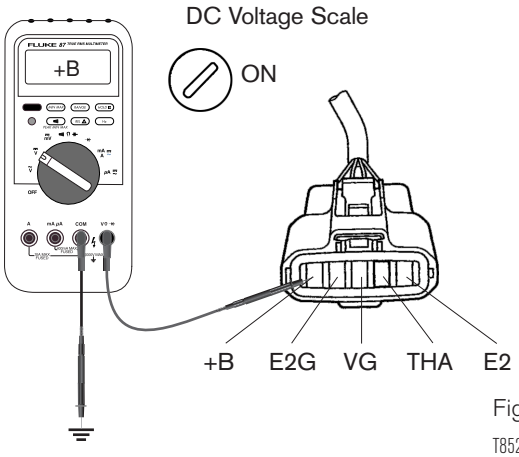

Fig. 2-39

T852f068

MAF Ground Circuit

MAF ground circuit check is performed with an ohmmeter.

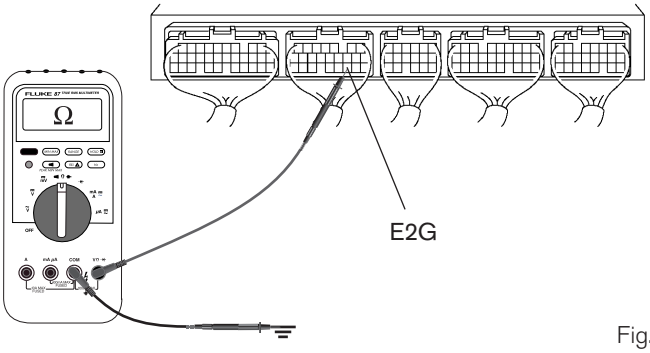

Fig. 2-40

T852f069

Checking MAF Operation

Most MAF sensors can be checked by supplying power and a ground to the right terminals, connecting a voltmeter to the signal (VG) wire, and blowing air through the sensor.

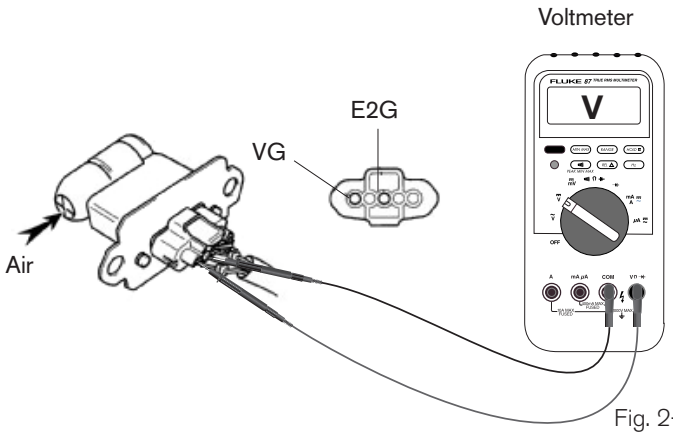

Fig. 2-41

T852f070

Vane Air Flow Meter

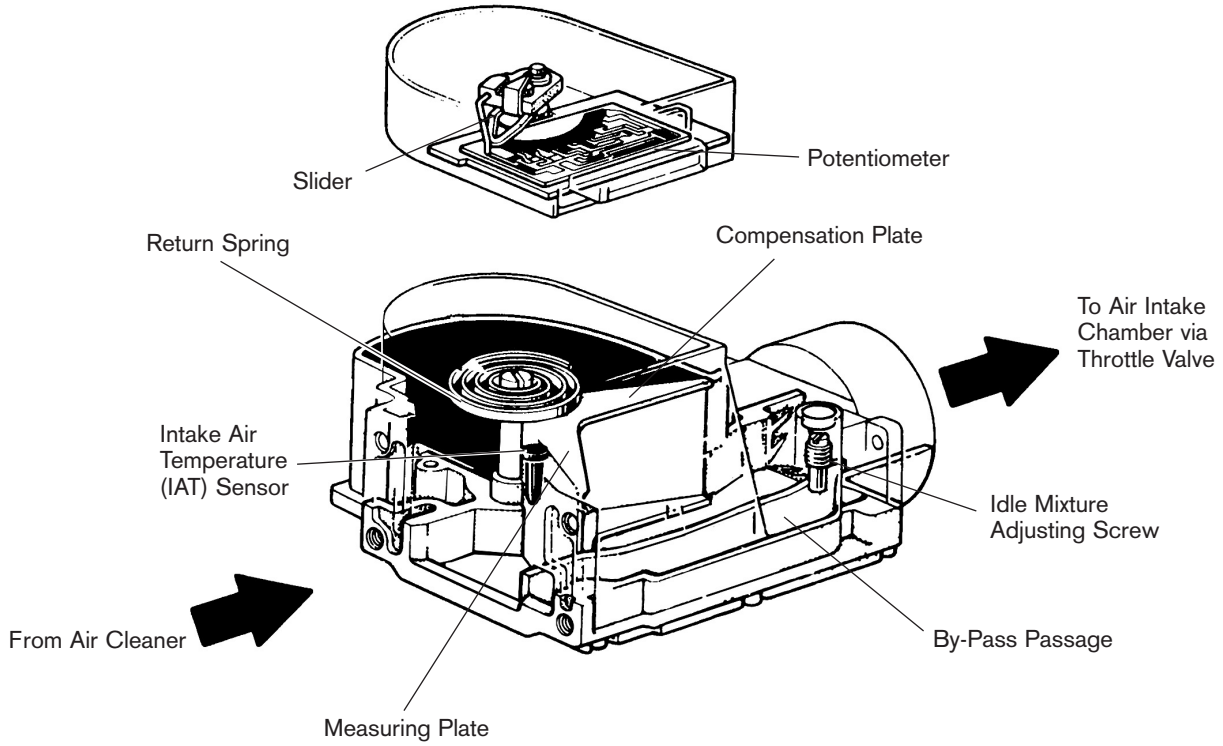

Fig. 2-42
T852f071

Vane Air Flow Meter

The Vane Air Flow Meter provides the ECM with an accurate measure of the load placed on the engine. The ECM uses it to calculate basic injection duration and basic ignition advance angle. Vane Air Flow Meters consist of the following components:

- Measuring Plate
- Compensation Plate
- Return Spring
- Potentiometer
- Bypass Air Passage
- Idle Adjusting Screw (factory adjusted)
- Fuel Pump Switch
- Intake Air Temperature (IAT) Sensor

VAF Meter Operation

The measuring plate is deflected in proportion to the volume of intake air flow. The damping chamber helps reduce rapid movement of the measuring plate.

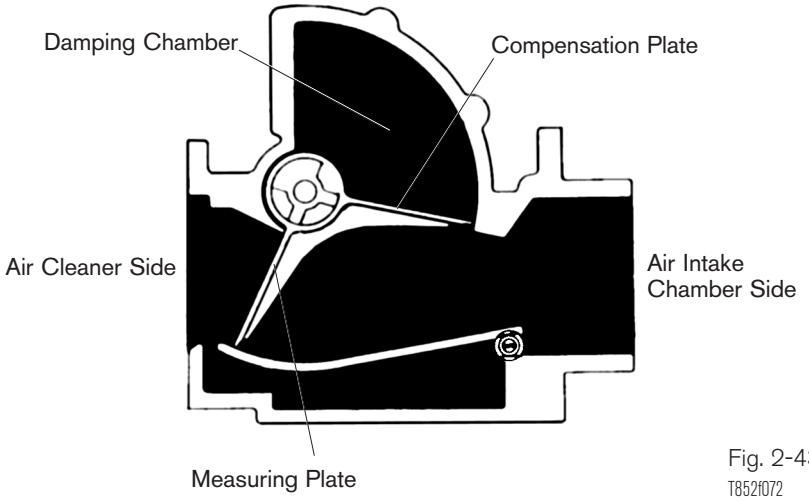

Fig. 2-43
T852f072

During engine operation, intake air flow reacts against the measuring plate (and return spring) and deflects the plate in proportion to the volume of air flow passing the plate. A compensation plate (which is attached to the measuring plate) is located inside a damping chamber and acts as a "shock absorber" to prevent rapid movement or vibration of the measuring plate.

Movement of the measuring plate is transferred through a shaft to a slider (movable arm) on the potentiometer. Movement of the slider against the potentiometer resistor causes a variable voltage signal back to the VS terminal at the ECM. Because of the relationship of the measuring plate and potentiometer, changes in the VS signal will be proportional to the air intake volume.

VAF Meter Circuit

The potentiometer inside the VAF provides a variable voltage signal to the ECM.

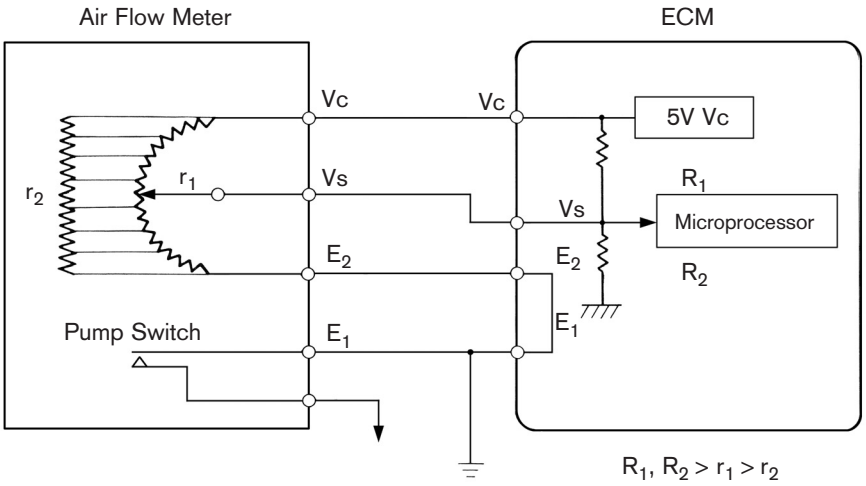

Fig. 2-44
T852f073

The R2 resistor (connected in parallel with R1) allows the meter to continue to provide a VS signal in the event that an open occurs in the main potentiometer (r1). The Vane Air Flow Meter also has a fuel pump switch built into the meter that closes to maintain fuel pump operation once the engine has started and air flow has begun.

The meter also contains a factory adjusted idle adjusting screw that is covered by a tamper-resistant plug. The repair manual does not provide procedures on resetting this screw in cases where it has been tampered with.

VAF Signal Voltage

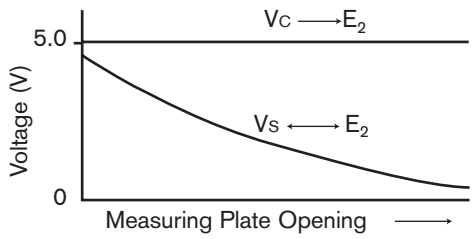

Fig. 2-45

T852f074/T852f075

Karman Vortex Air Flow Meter

Uses a moveable mirror and phototransistor to measure intake air flow. This type of meter operates without restricting air flow.

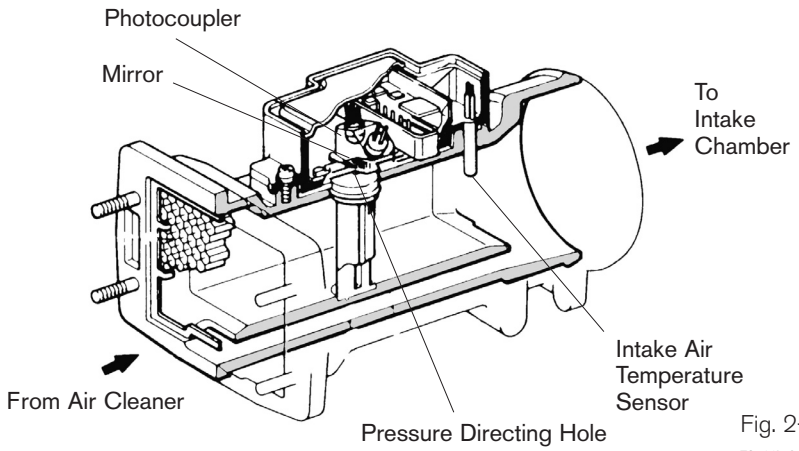

Fig. 2-46
T852f076

Karman Vortex Air Flow Meter

This air flow meter provides the same type of information (intake air volume) as the Vane Air Flow Meter. It consists of the following components:

- Vortex Generator
- Mirror (metal foil)
- Photo Coupler (LED and photo transistor)

Karman Vortex Air Flow Meter Operation

Intake air flow reacting against the vortex generator creates a swirling effect to the air downstream, very similar to the wake created in the water after a boat passes. This wake or flutter is referred to as a "Karman Vortex." The frequencies of the vortices vary in proportion to the intake air velocity (engine load).

Karman Vortex Operation

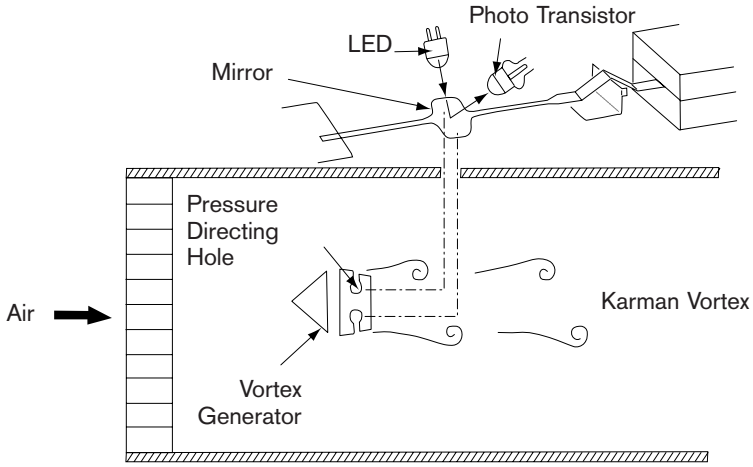

Fig. 2-47
T852f077

The vortices are metered into a pressure directing hole from which they act upon the metal foil mirror. The air flow against the mirror causes it to oscillate in proportion to the vortex frequency. This causes the illumination from the photo coupler's LED to be alternately applied to and diverted away from a photo transistor. As a result, the photo transistor alternately grounds or opens the 5-volt KS signal to the ECM.

Karman Vortex Air Flow Meter Circuit

This type of meter generates a 5 Volt square wave signal that varies in frequency.

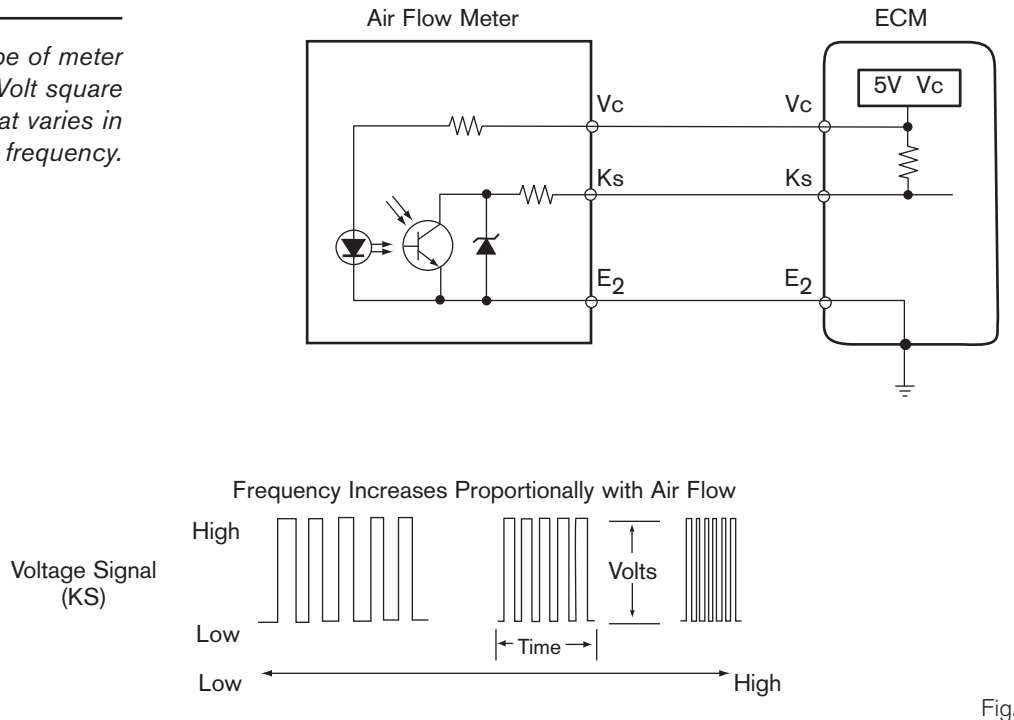

Fig. 2-48

T8521078

This creates a 5 volt square wave signal that increases frequency in proportion to the increase in intake air flow. Because of the rapid, high frequency nature of this signal, accurate signal inspection at various engine operating ranges requires using a high quality digital multimeter (with frequency capabilities) or oscilloscope.

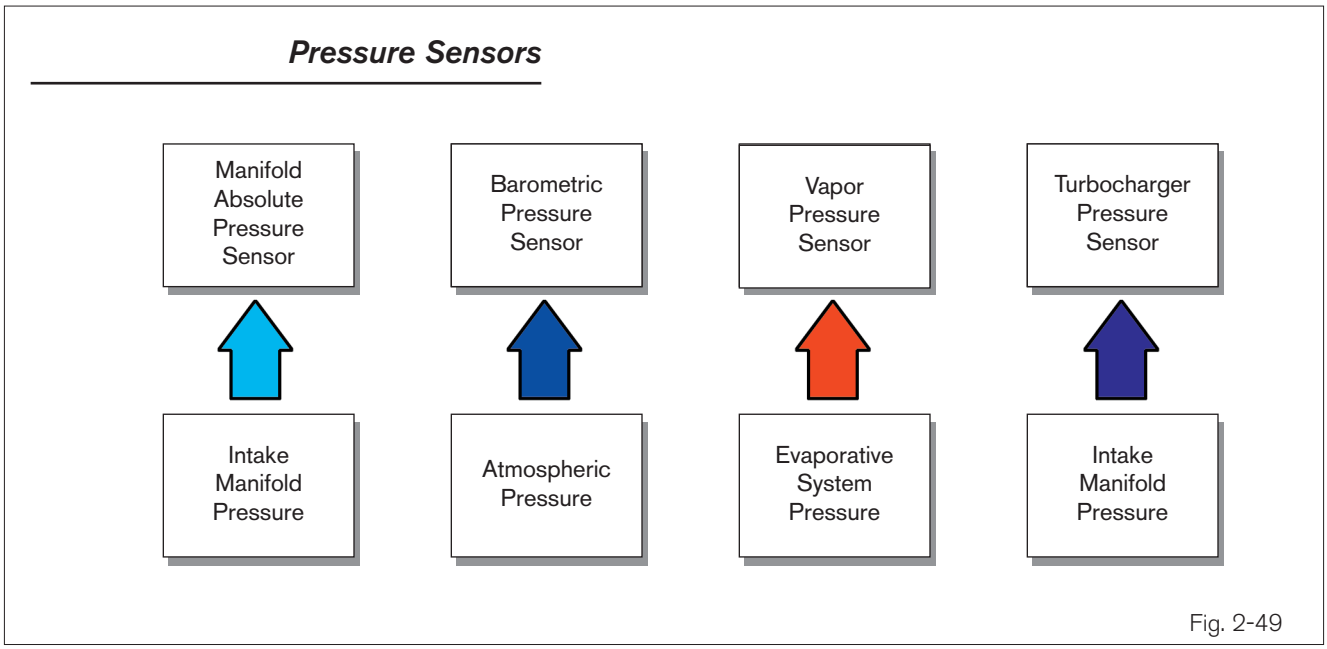

Fig. 2-49

Pressure Sensors

Pressure sensors are used to measure intake manifold pressure, atmospheric pressure, vapor pressure in the fuel tank, etc. Though the location is different, and the pressures being measured vary, the operating principles are similar.

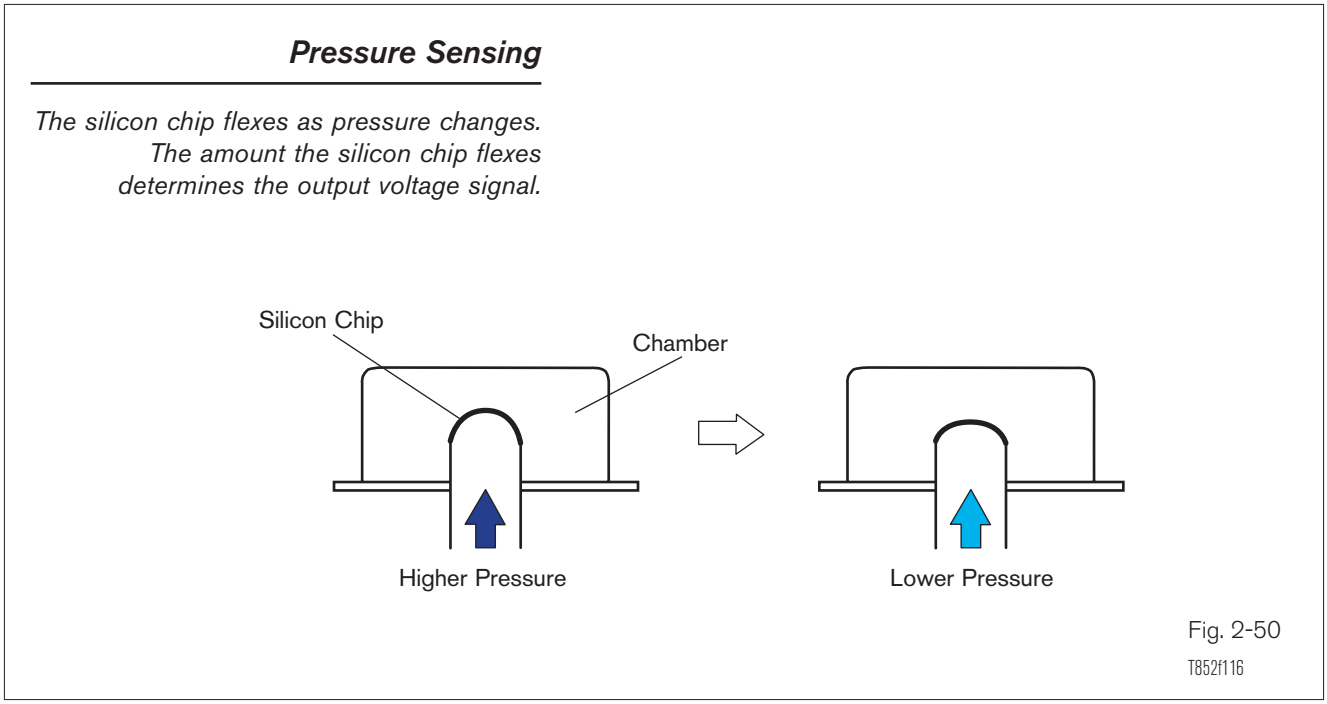

Fig. 2-50

T852f116

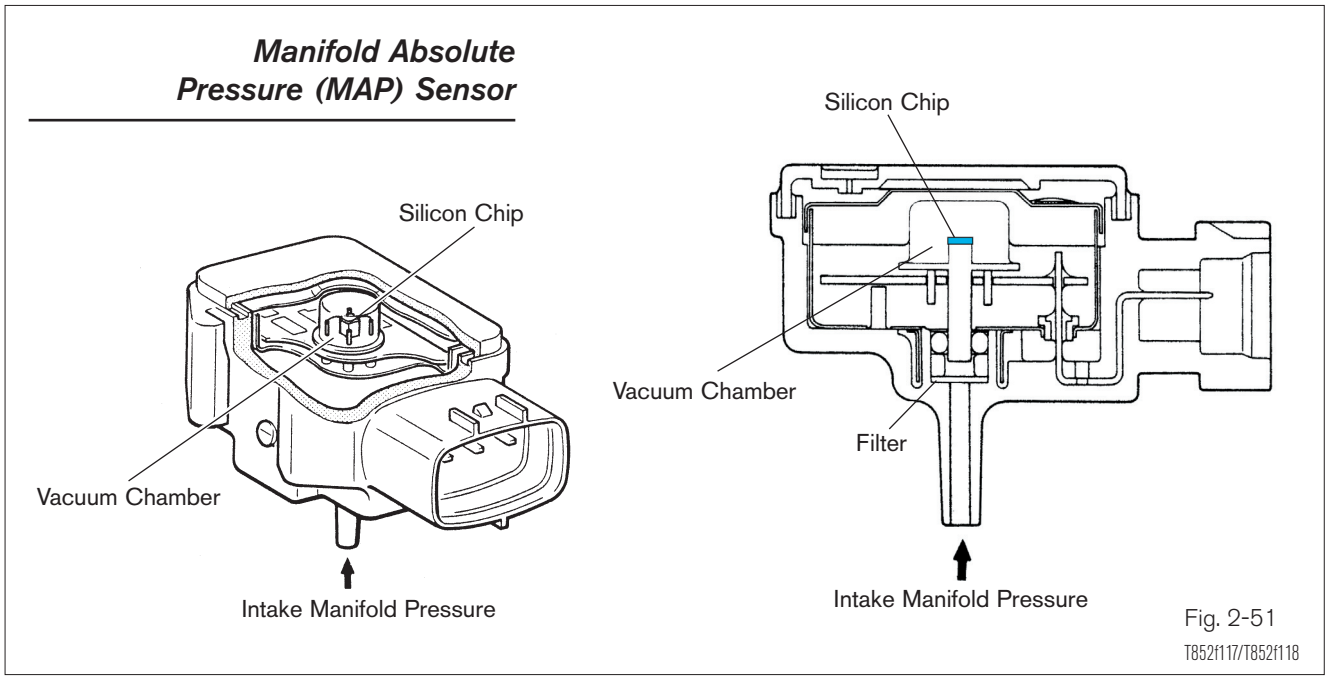

Fig. 2-51
T852f117/T852f118

Manifold Absolute Pressure (MAP) Sensor

Lexus engines do not use a MAP sensor, but they are found on many other makes. This section is for your understanding of this common sensor.

In the Manifold Absolute Pressure (MAP) sensor there is a silicon chip mounted inside a reference chamber. On one side of the chip is a reference pressure. This reference pressure is either a perfect vacuum or a calibrated pressure, depending on the application. On the other side is the pressure to be measured. The silicon chip changes its resistance with the changes in pressure. When the silicon chip flexes with the change in pressure, the electrical resistance of the chip changes. This change in resistance alters the voltage signal. The ECM interprets the voltage signal as pressure and any change in the voltage signal means there was a change in pressure.

Intake manifold pressure is directly related to engine load. The ECM needs to know intake manifold pressure to calculate how much fuel to inject, when to ignite the cylinder, and other functions. The MAP sensor is located either directly on the intake manifold or it is mounted high in the engine compartment and connected to the intake manifold with vacuum hose. It is critical the vacuum hose not have any kinks for proper operation.

MAP Sensor Operation

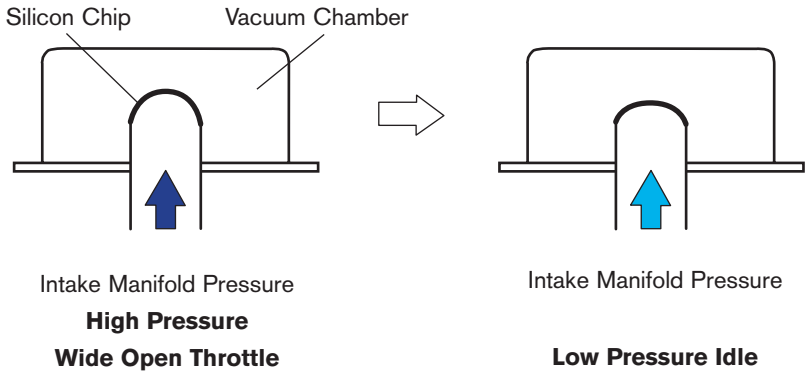

Fig. 2-52
T852f116

The MAP sensor uses a perfect vacuum as a reference pressure. The difference in pressure between the vacuum pressure and intake manifold pressure changes the voltage signal. The MAP sensor converts the intake manifold pressure into a voltage signal (PIM).

Pressure vs. MAP Voltage Signal

As intake manifold pressure rises, the voltage signal increases.

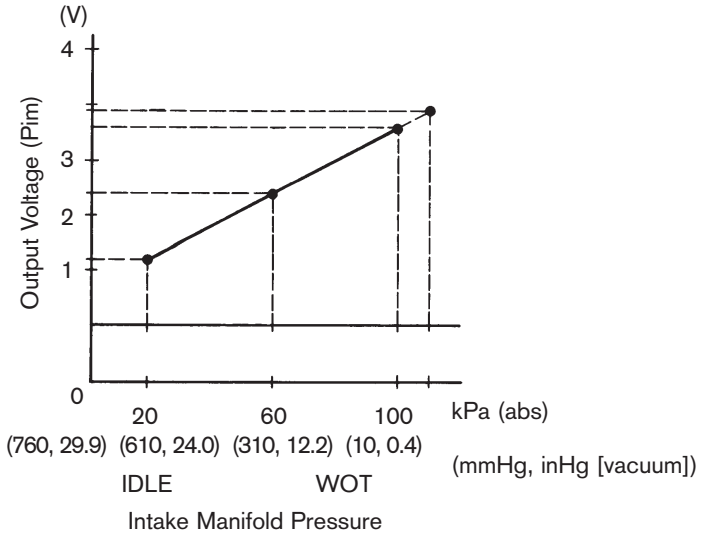

Fig. 2-53
T852f119

MAP Sensor Circuit

The ECM measures this voltage signal at the PIM terminal. This sensor receives 5 Volts from the ECM on the VC (or VCC) line. The ground for the sensor is through a ground wire to the ECM (usually terminal E2).

The PIM signal will be 5 Volts if the PIM wire is disconnected.

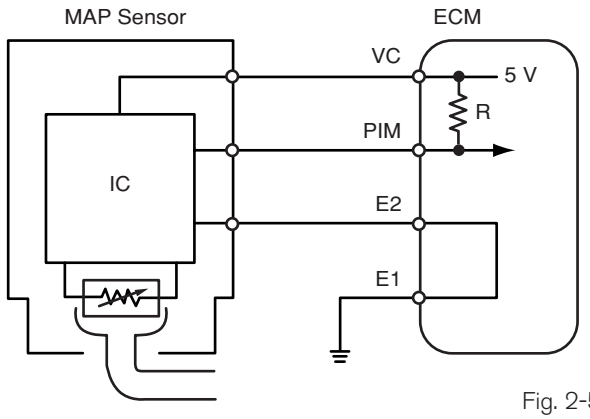

Fig. 2-54
T852f1120

The MAP sensor voltage signal is highest when intake manifold pressure is highest (ignition key ON, engine off or when the throttle is suddenly opened). The MAP sensor voltage signal is lowest when intake manifold pressure is lowest on deceleration with throttle closed.

MAP Sensor Diagnosis

The MAP sensor can cause a variety of driveability problems since it is an important sensor for fuel injection and ignition timing.

Visually check the sensor, connections, and vacuum hose. The vacuum hose should be free of kinks, leaks, obstructions and connected to the proper port.

The VC (VCC) wire needs to supply approximately 5 volts to the MAP sensor. The E2 ground wire should not have any resistance.

Sensor calibration and performance is checked by applying different pressures and comparing to the voltage drop specification.

MAP Sensor Performance Check

The chart is representative of testing the MAP sensor. Voltage drop is calculated. Refer to Repair Manual for procedure.

Applied Vacuum					
kPa	13.3	26.7	40.0	53.5	66.7
mmHg	100	200	300	400	500
in. Hg.	3.94	7.87	11.81	15.75	19.69
Voltage Drop V	0.3 — 0.5	0.7 — 0.9	1.1 — 1.3	1.5 — 1.7	1.9 — 2.1

Fig. 2-55

Barometric Pressure Sensor Operation

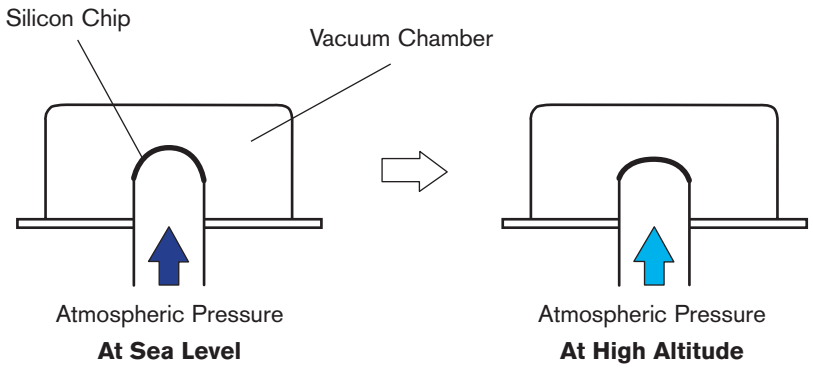

Fig. 2-56

T852f116

Barometric Pressure Sensor

The Barometric Pressure Sensor, sometimes called a High Altitude Compensator (HAC), measures the atmospheric pressure. Atmospheric pressure varies with weather and altitude. At higher elevations the air is less dense, therefore, it has less pressure. In addition, weather changes air pressure. This sensor operates the same as the MAP sensor except that it measures atmospheric pressure. It is located inside the ECM. If it is defective, the entire ECM must be replaced.

Vapor Pressure Sensor

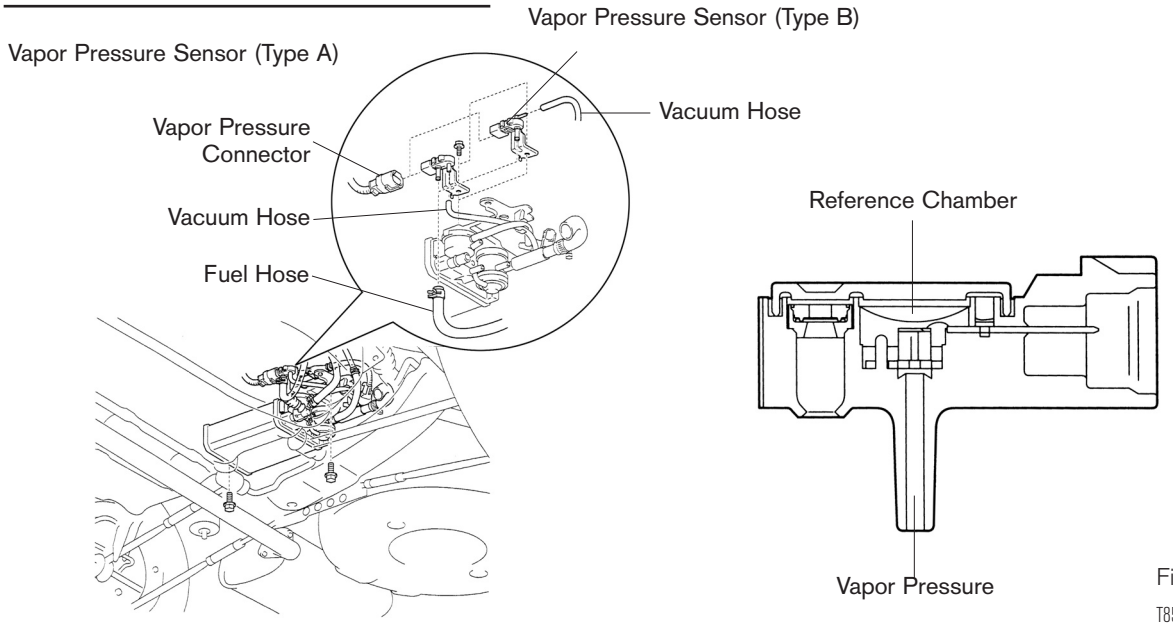

Fig. 2-57
T852f122/T852f123

Vapor Pressure Sensor

The Vapor Pressure Sensor (VPS) measures the vapor pressure in the evaporative emission control system. The Vapor Pressure Sensor may be located on the fuel tank, near the charcoal canister assembly, or in a remote location.

Vapor Pressure Sensor Operation

The pressure inside the reference chamber changes with atmospheric pressure. The reference chamber pressure uses a small flexible diaphragm exposed to atmospheric pressure. This causes the reference pressure to increase with an increase in atmospheric pressure. Using this method allows the vapor pressure reading to be calibrated with atmospheric pressure.

The VPS is extremely sensitive to changes in pressure. 1.0 psi = 51.7 mmHg

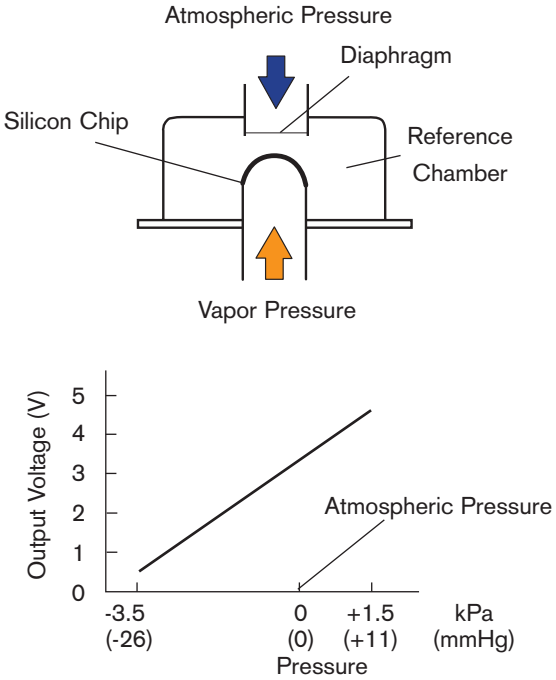

Fig. 2-58
T852f385/T852f124

This sensor uses a silicon chip with a calibrated reference pressure on one side of the chip, the other side of the chip is exposed to vapor pressure. Changes in vapor pressure cause the chip to flex and vary the voltage signal to the ECM. The voltage signal out depends on the difference between atmospheric pressure and vapor pressure. As vapor pressure increases the voltage signal increases. This sensor is sensitive to very small pressure changes (1.0 psi = 51.7 mmHg).

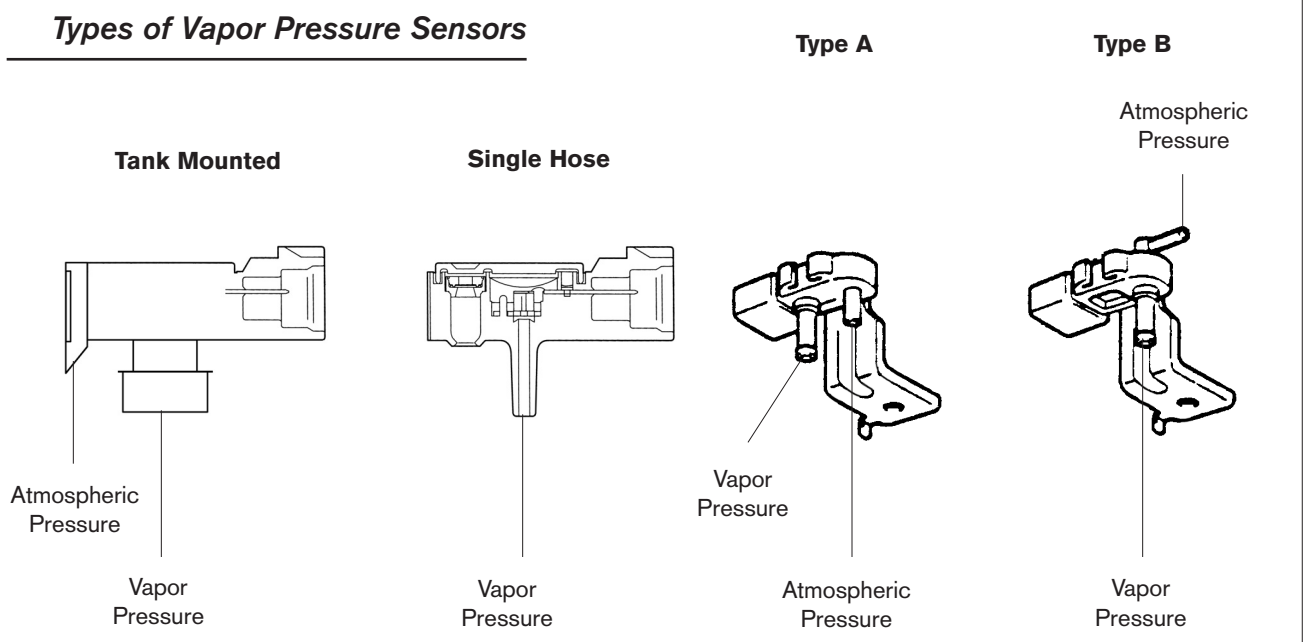

Fig. 2-59

T852f331/T852f123
T852f337/T852f338

Vapor pressure sensors come in variety of configurations. When the VPS is mounted directly on the fuel pump assembly, no hoses are required. For remote locations, there may be one or two hoses connected to the VPS. If the VPS uses one hose, the hose is connected to vapor pressure. In the two hose configuration, one hose is connected to vapor pressure, the other hose to atmospheric pressure. It is important that these hoses are connected to the proper port. If they are reversed, DTCs will set.

VPS Electrical Circuit

The ECM receives this voltage signal at the PTNK terminal. This sensor receives 5 volts from the ECM on the VC line. The ground for the sensor is through a ground wire to the ECM (usually terminal E2).

The PTNK signal will be 5 volts if the PTNK wire is disconnected.

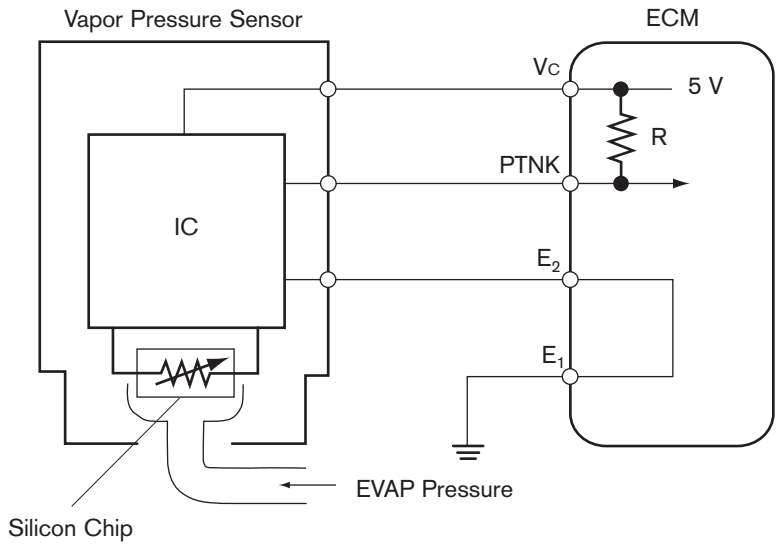

Fig. 2-60
T852f013

VPS Diagnosis

Check all hoses for proper connection, restrictions, and leaks. Check the VC and E2 voltages. Apply the specified pressure and read sensor voltage output. The vapor pressure sensor is calibrated for the pressures found in the EVAP system, so apply only the specified amount to prevent damaging the sensor.

Position/ Speed Sensors

Position/speed sensors provide information to the ECM about the position of a component, the speed of a component, and the change in speed of a component. The following sensors provide this data:

- Camshaft Position Sensor (also called G sensor)
- Crankshaft Position Sensor (also called NE sensor)
- Vehicle Speed Sensor

Position/Speed Sensors

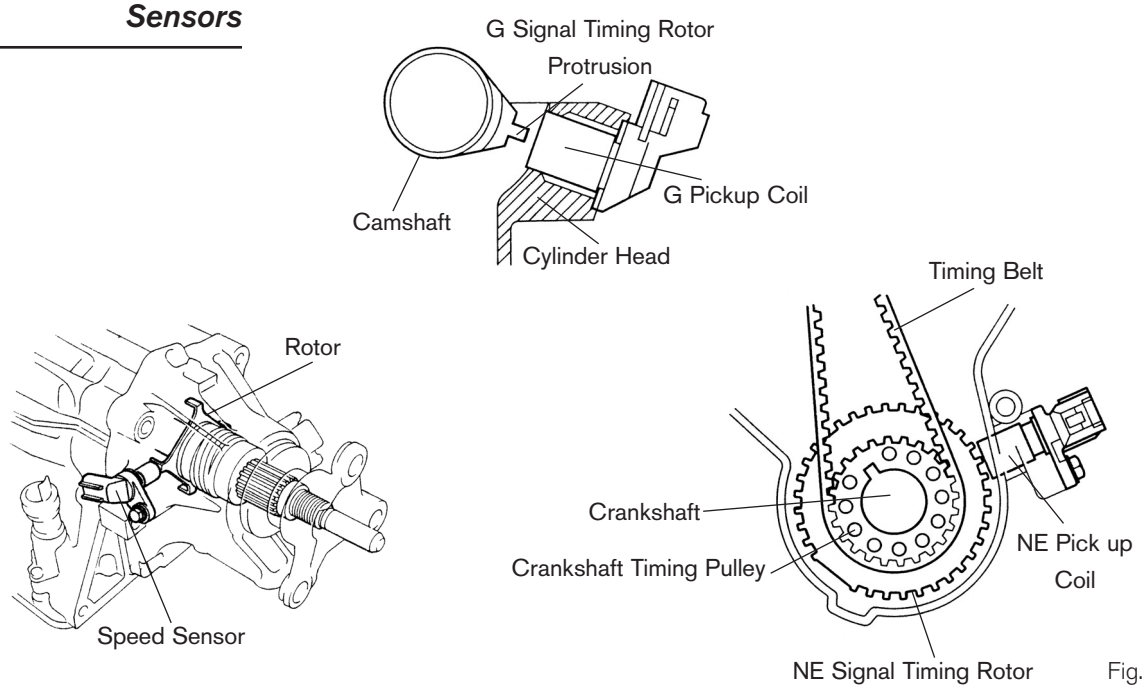

Fig. 2-61

T852f095/T852f096
T852f097

Pick-Up Coil (Variable Reluctance) Type Sensors

The Camshaft Position Sensor, Crankshaft Position Sensor, and one type of vehicle speed sensor are of the pick-up coil type sensor.

This type of sensor consists of a permanent magnet, yoke, and coil. This sensor is mounted close to a toothed gear called a rotor. As each tooth moves by the sensor, an AC voltage pulse is induced in the coil. Each tooth produces a pulse. As the gear rotates faster more pulses are produced. The ECM determines the speed the component is revolving based on the number of pulses. The number of pulses in one second is the signal frequency.

Pick-Up Coil (Variable Reluctance) Sensor

Rotor speed determines the signal frequency. The faster the rotor revolves the higher the frequency.

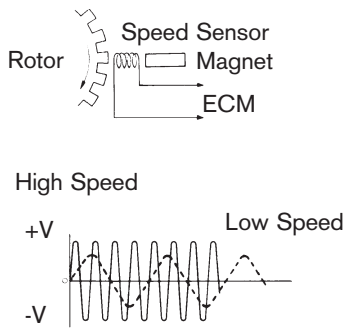

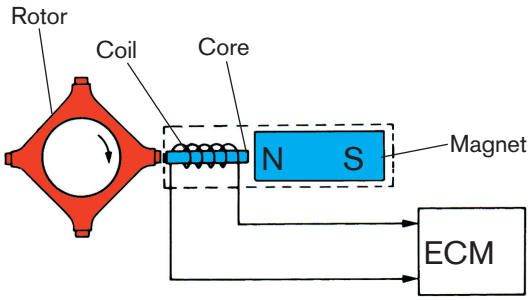

Fig. 2-62

T852f098/T852f099

The distance between the rotor and pickup coil is critical. The further apart they are, the weaker the signal.

Not all rotors use teeth. Sometimes the rotor is notched, which will produce the same effect.

These sensors generate AC voltage, and do not need an external power supply. Another common characteristic is that they have two wires to carry the AC voltage.

The wires are twisted and shielded to prevent electrical interference from disrupting the signal. The EWD will indicate if the wires are shielded.

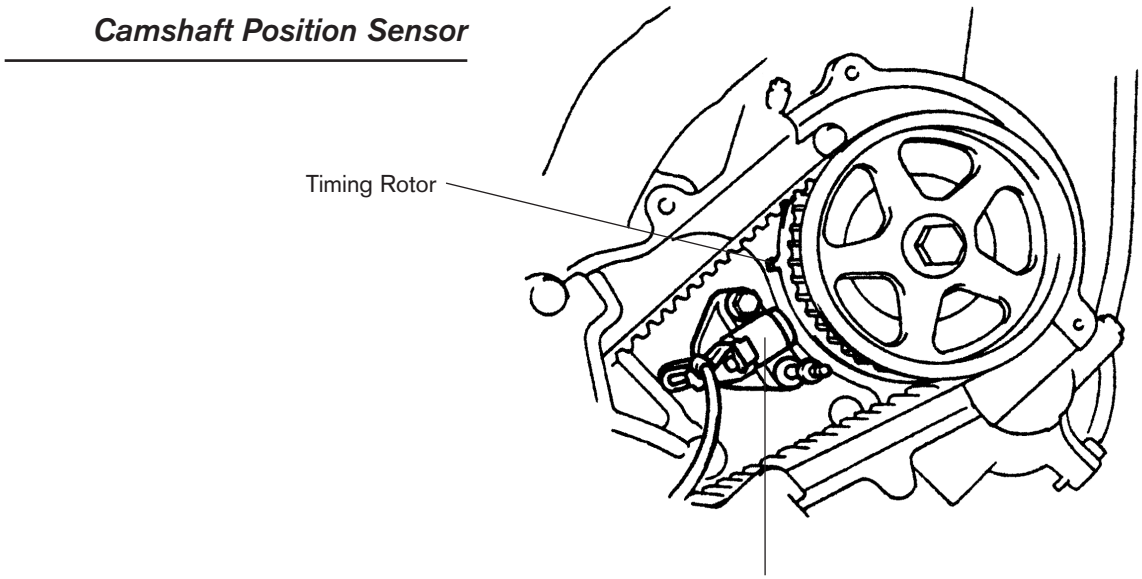

Fig. 2-63
T852f100

Camshaft Position Sensor (G Sensor) Variable Valve Timing Position Sensor

By knowing the position of the camshaft, the ECM can determine when cylinder No. 1 is on the compression stroke. The ECM uses this information for fuel injection timing, for direct ignition systems and for variable valve timing systems.

This sensor is located near one of the camshafts. With variable valve timing V-type engines, there is one sensor for each cylinder bank. On distributor ignition systems, it is often called the G sensor and is located in the distributor.

Voltage

An AC signal is generated that is directly proportional to camshaft speed. That is, as the camshaft revolves faster the frequency increases.

The terminal on the ECM is designated with a letter G, and on some models a G and a number, such as G22 is used.

Some variable valve timing systems call the Camshaft Position Sensor the Variable Valve Timing Position Sensor. See section on variable valve timing systems for more information.

Crankshaft Position Sensor (NE Sensor)

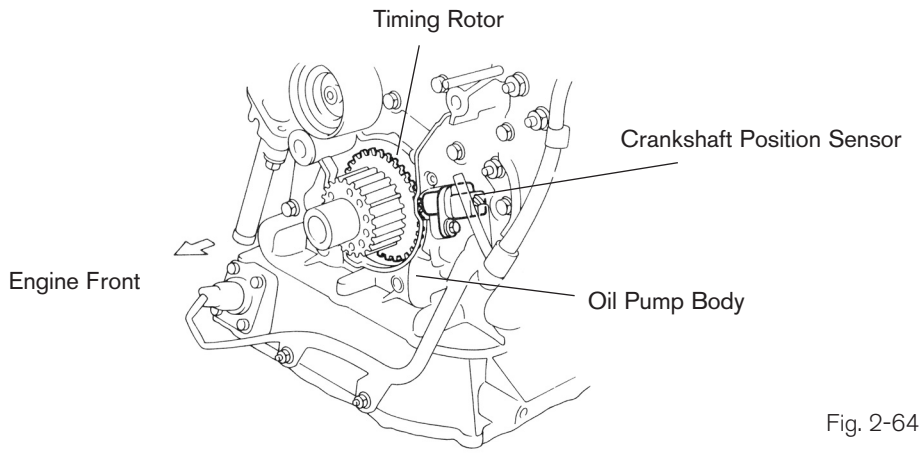

Fig. 2-64
T852f101

Crankshaft Position Sensor (NE Sensor)

The ECM uses crankshaft position signal to determine engine RPM, crankshaft position, and engine misfire. This signal is referred to as the NE signal. The NE signal combined with the G signal indicates the cylinder that is on compression and the ECM can determine from its programming the engine firing order. See Section 3 on ignition systems for more information.

NE and G Signals

The periodic gap in the NE signal is because there are teeth missing in the timing rotor. The gap is used by the ECM as reference to crankshaft position. When combined with the G signal, the ECM can determine cylinder position and stroke.

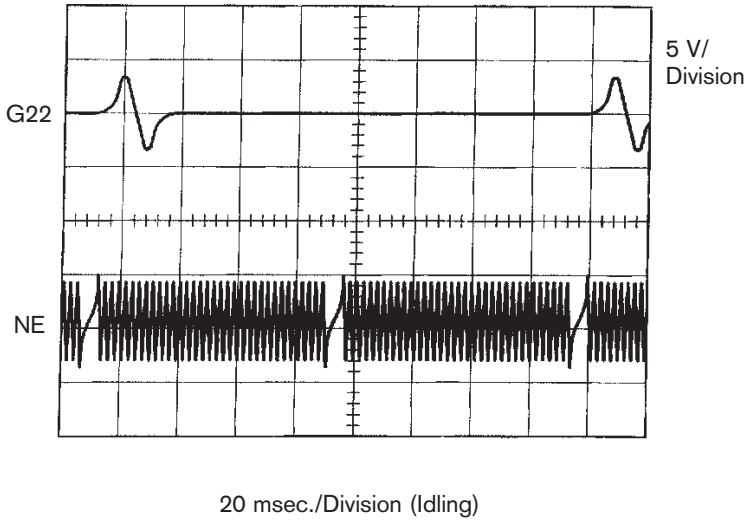

Fig. 2-65
T852f102

Vehicle Speed Sensor Signal Circuit Combinations

There are different configurations by which the vehicle speed sensor signal reaches the ECM.

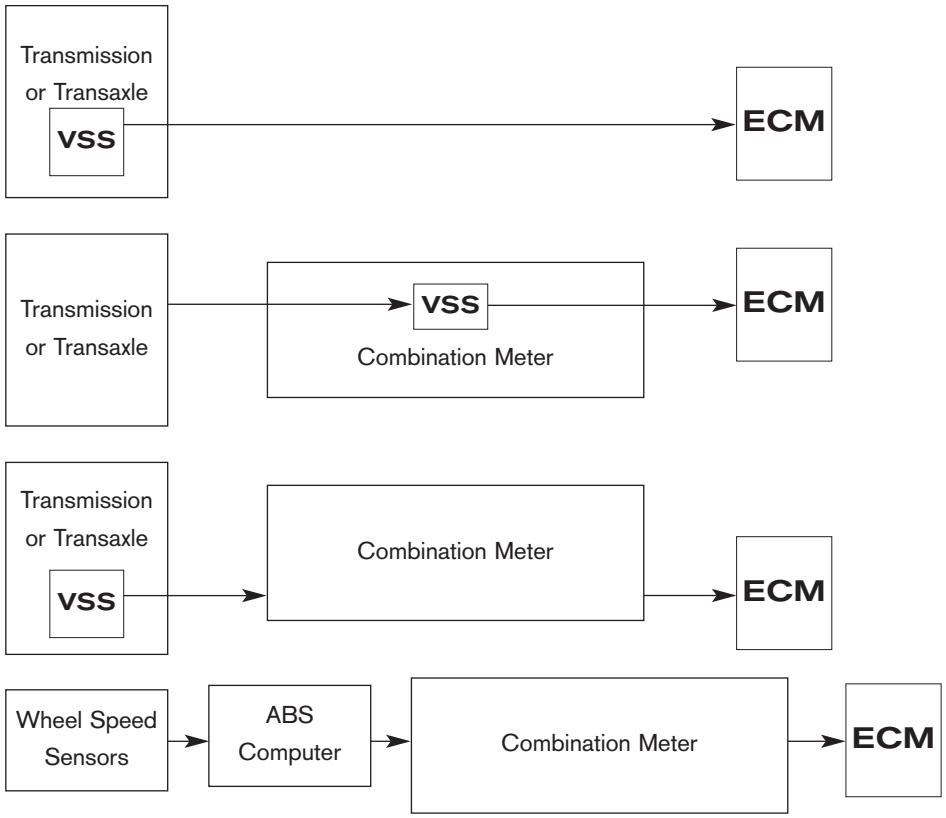

Fig. 2-66

Vehicle Speed Sensor (VSS)

The ECM uses the Vehicle Speed Sensor (VSS) signal to modify engine functions and initiate diagnostic routines. The VSS signal originates from a sensor measuring transmission/transaxle output speed or wheel speed. Different types of sensors have been used depending on models and applications.

On some vehicles, the vehicle speed sensor signal is processed in the combination meter and then sent to the ECM.

On some anti-lock brake system (ABS) equipped vehicles, the ABS computer processes the wheel speed sensor signals and sends a speed sensor signal to the combination meter and then to the ECM. You will need to consult the EWD to confirm the type of system you are working on.

Pick-Up Coil (Variable Reluctance) Type

This type of VSS operates on the variable reluctance principle discussed earlier and it is used to measure transmission/transaxle output speed or wheel speed depending on type of system.

VSS Mounted in Transaxle

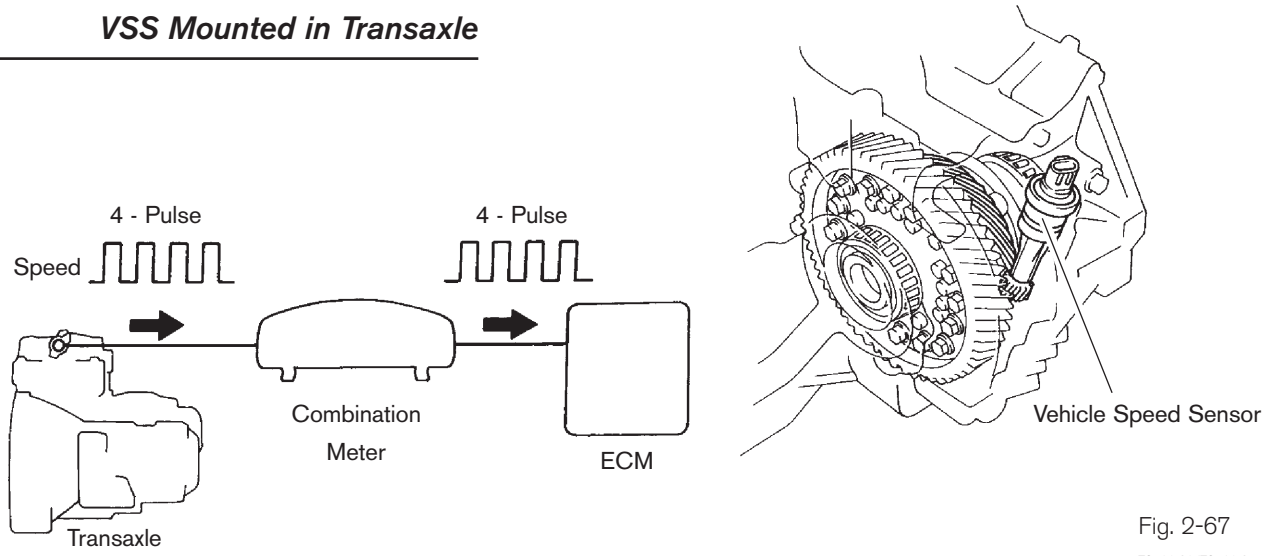

Fig. 2-67
T852f103/T852f104

VSS Mounted in Transmission

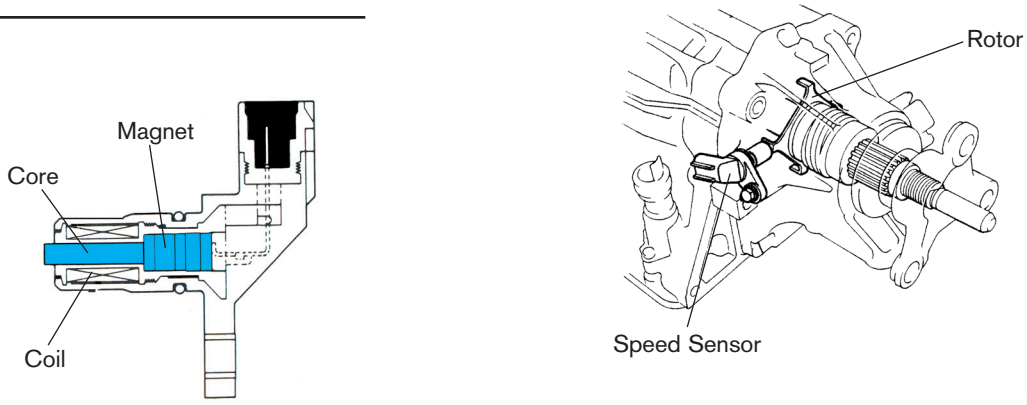

Fig. 2-68
T852f105/T852f095

MRE Type VSS

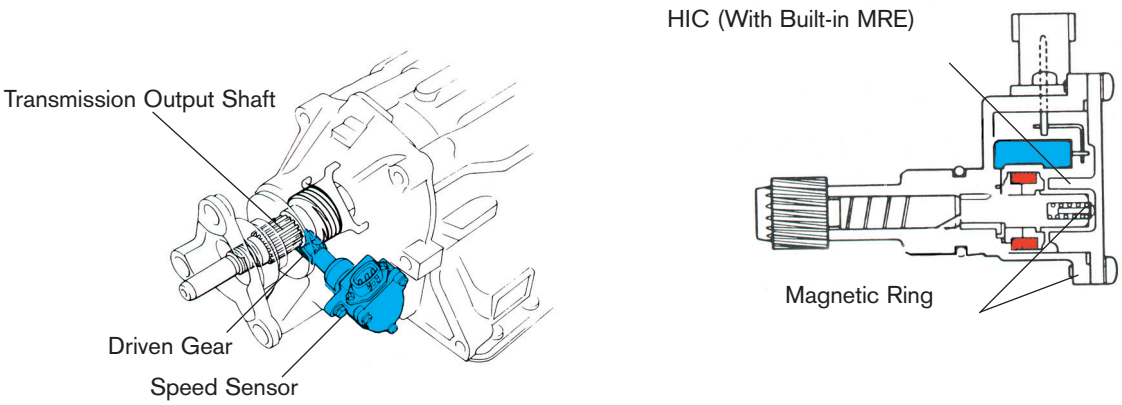

Fig. 2-69
T852f106/T852f107

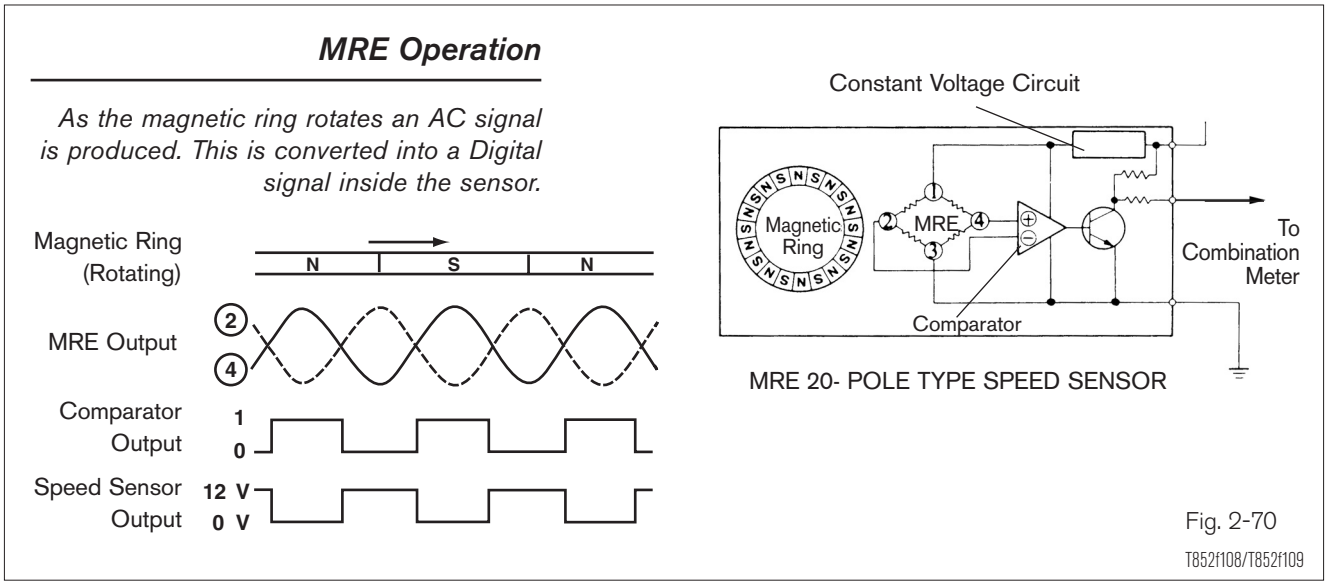

Magnetic Resistance Element (MRE) Type

The MRE is driven by the output shaft on a transmission or output gear on a transaxle. This sensor uses a magnetic ring that revolves when the output shaft is turning. The MRE senses the changing magnetic field. This signal is conditioned inside the VSS to a digital wave. This digital wave signal is received by the Combination meter, and then sent to the ECM. The MRE requires an external power supply to operate.

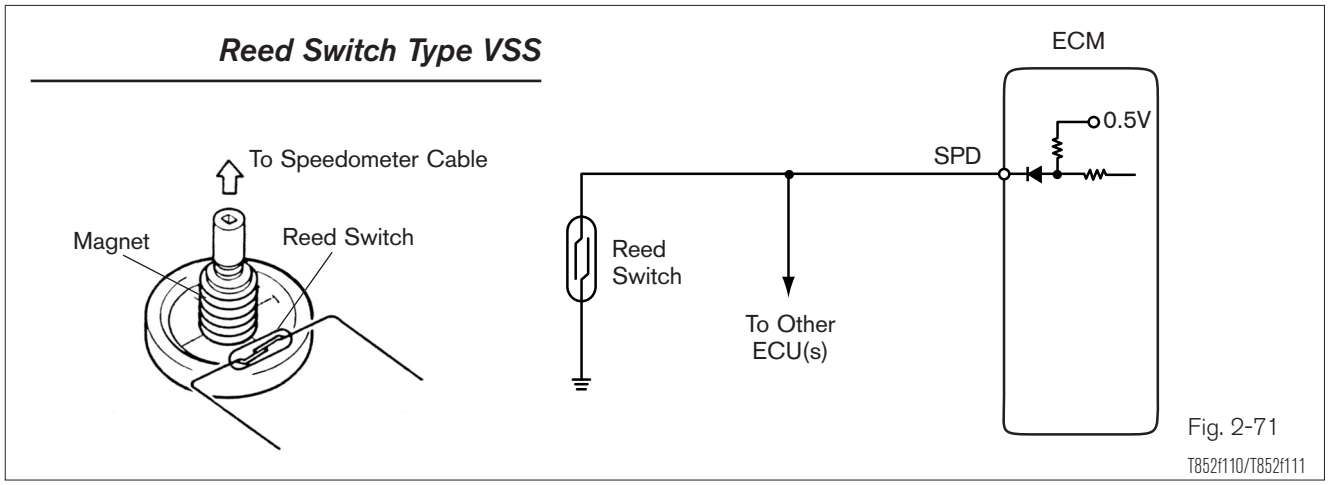

Reed Switch Type

The reed switch type is driven by the speedometer cable. The main components are a magnet, reed switch, and the speedometer cable. As the magnet revolves the reed switch contacts open and close four times per revolution. This action produces 4 pulses per revolution. From the number of pulses put out by the VSS, the combination meter/ECM is able to determine vehicle speed.

Oxygen Sensor Location

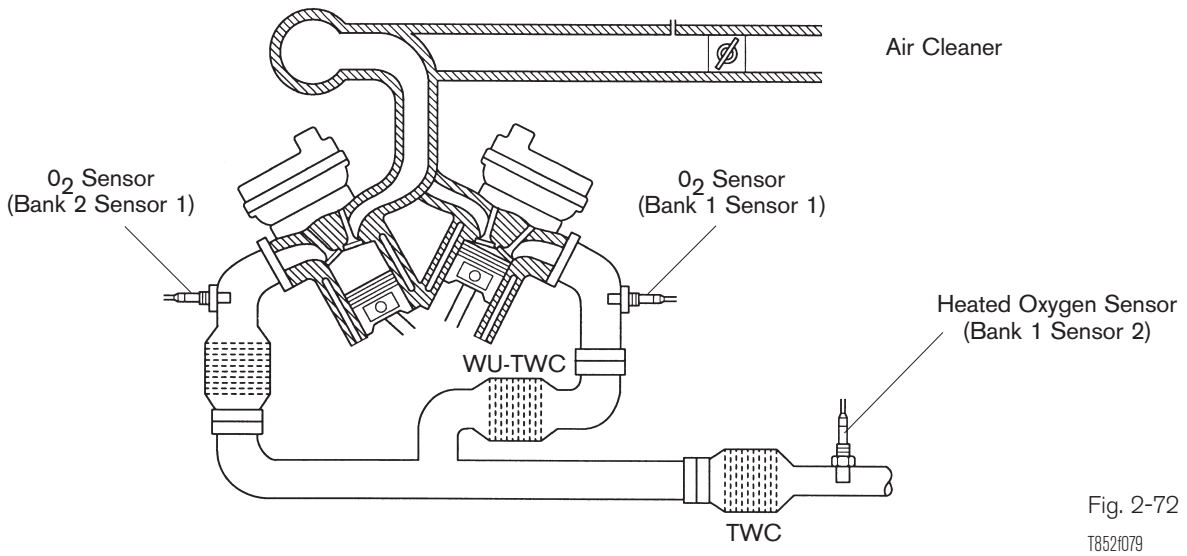

Fig. 2-72
T852f079

Oxygen and Air/Fuel Ratio Sensors

The ECM uses an oxygen sensor to ensure the air/fuel ratio is correct for the catalytic converter. Based on the oxygen sensor signal, the ECM will adjust the amount of fuel injected into the intake air stream.

There are different types of oxygen sensors, but two of the more common types are:

- the narrow range oxygen sensor, the oldest style, simply called the oxygen sensor
- wide range oxygen sensor, the newest style, called the air/fuel ratio (A/F) sensor

OBD II vehicles require two oxygen sensors: one before and one after the catalytic converter. The oxygen sensor, or air/fuel ratio sensor, before the catalytic converter is used by the ECM to adjust the air/fuel ratio. This sensor in OBD II terms is referred to as sensor 1. On V-type engines one sensor will be referred to as Bank 1 Sensor 1 and the other as Bank 2 Sensor 1. The oxygen sensor after the catalytic converter is used by the ECM primarily to determine catalytic converter efficiency. This sensor is referred to as sensor 2. With two catalytic converters, one sensor will be Bank 1 Sensor 2 and the other is Bank 2 Sensor 2.

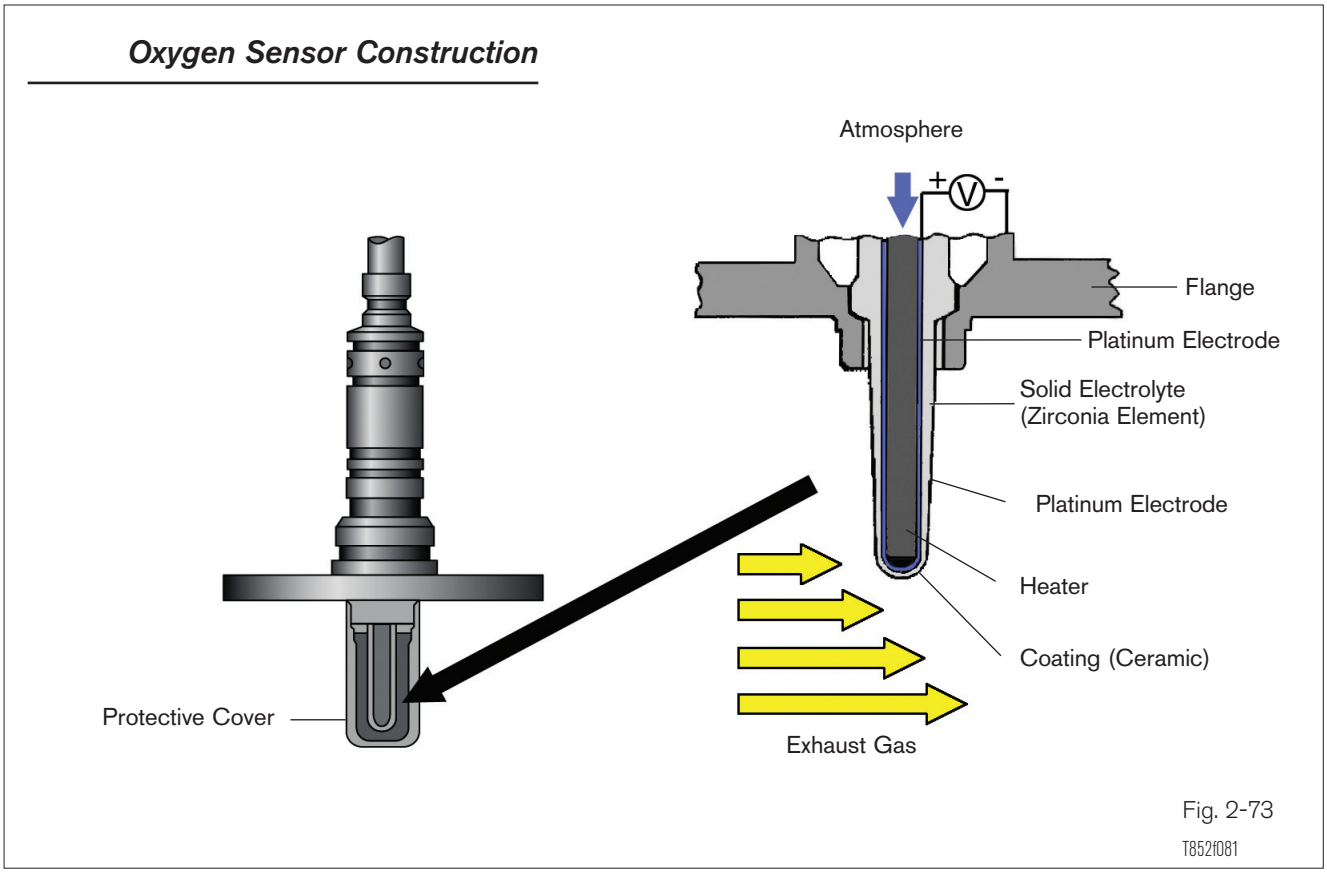

Oxygen Sensor

This style of oxygen sensor has been in service the longest time. It is made of zirconia (zirconium dioxide), platinum electrodes, and a heater. The oxygen sensor generates a voltage signal based on the amount of oxygen in the exhaust compared to the atmospheric oxygen. The zirconia element has one side exposed to the exhaust stream, the other side open to the atmosphere. Each side has a platinum electrode attached to Zirconium dioxide element.

The platinum electrodes conduct the voltage generated. Contamination or corrosion of the platinum electrodes or zirconia elements will reduce the voltage signal output.

Oxygen Sensor Operation

When there is less oxygen in the exhaust, there is a large difference in oxygen content when compared to the atmospheric side. This produces a higher voltage signal. When there is more oxygen in the exhaust, there is a small difference and the voltage output is low.

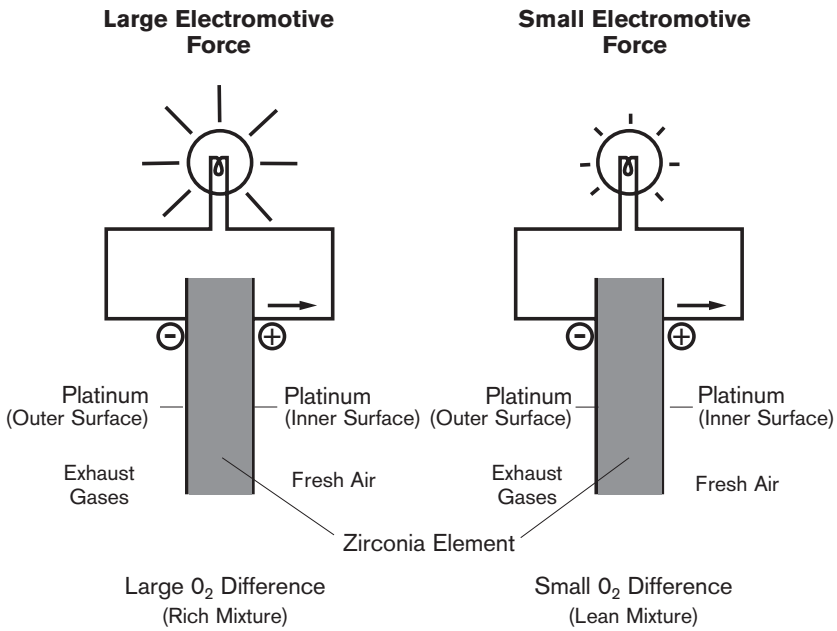

Operation Principles of Oxygen Sensor

Fig. 2-74

T852f082

Operation When exhaust oxygen content is high, oxygen sensor voltage output is low. When exhaust oxygen content is low, oxygen sensor voltage output is high. The greater the difference in oxygen content between the exhaust stream and atmosphere, the higher the voltage signal.

Exhaust Oxygen Content	Oxygen Sensor Output	Air/Fuel Ratio Judged To Be
Low →	High, Above 0.45 volts →	Rich
High →	Low, Below 0.45 volts →	Lean

From the oxygen content, the ECM can determine if the air/fuel ratio is rich or lean and adjusts the fuel mixture accordingly. A rich mixture consumes nearly all the oxygen, so the voltage signal is high, in the range of 0.6 - 1.0 volts. A lean mixture has more available oxygen after combustion than a rich mixture, so the voltage signal is low, 0.4 - 0.1 volts. At the stoichiometric air/fuel ratio (14.7:1), oxygen sensor voltage output is approximately 0.45 volts.

Oxygen Sensor Voltage Range

The oxygen sensor is unable to detect how rich or lean the air/fuel mixture is.

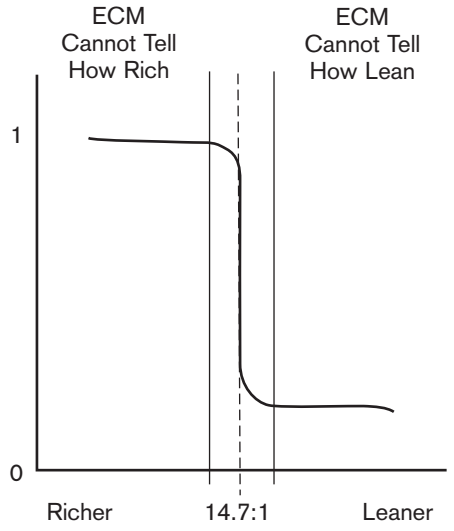

Fig. 2-75

T852f083

Small changes in the air/fuel ratio from the stoichiometric point radically changes the voltage signal. This type of oxygen sensor is sometimes referred to as a narrow range sensor because it cannot detect the small changes in the exhaust stream oxygen content produced by changes in the air/fuel mixture. The ECM will continuously add and subtract fuel producing a rich/lean cycle. Refer to Closed Loop Fuel Control in the Fuel Injection section for more information.

NOTE

Think of the oxygen sensor as a switch. Each time the air/fuel ratio is at stoichiometry (14.7:1) the oxygen sensor switches either high or low.

Oxygen Sensor Output vs. Temperature

When cold, the oxygen sensor acts as a resistor until it reaches operating temperature. At operating temperature, the oxygen sensor acts as a battery. For accurate signal output, it is essential that the oxygen sensor is kept at high temperatures.

In the figure, the rich mixture is not accurately measured until oxygen sensor has reached operating temperature.

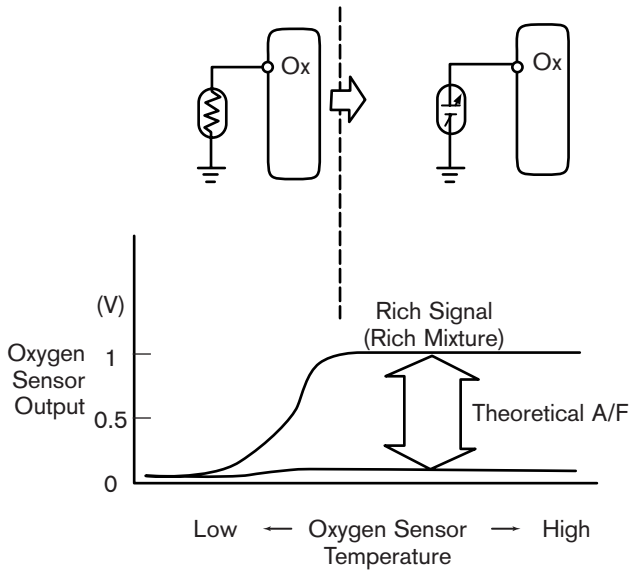

Fig. 2-76

T852f084

The oxygen sensor will only generate an accurate signal when it has reached a minimum operating temperature of 400°C (750°F). To quickly warm up the oxygen sensor and to keep it hot at idle and light load conditions, the oxygen sensor has a heater built into it. This heater is controlled by the ECM. See Oxygen Sensor Heater Control for more information.

Types of Oxygen Signals

Normal Signal

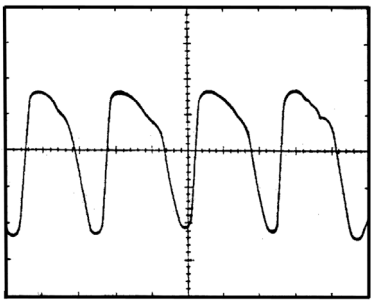

Abnormal Signals

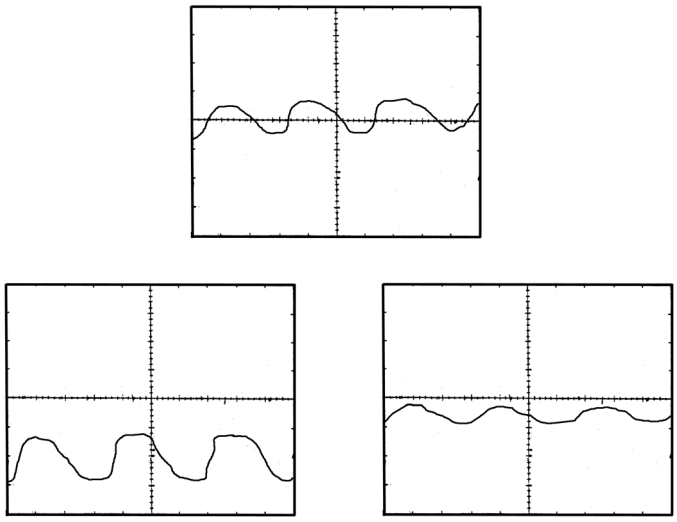

Fig. 2-77

T852f389/T852f390
T852f391/T852f392

Air/Fuel Ratio Sensor

The A/F sensor voltage signal is relatively proportional to exhaust oxygen content. Note that when the air/fuel ratio is leaner, the ECM monitored voltage is higher.

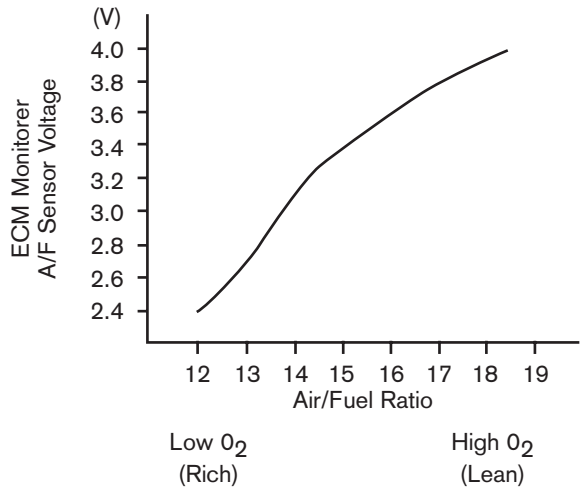

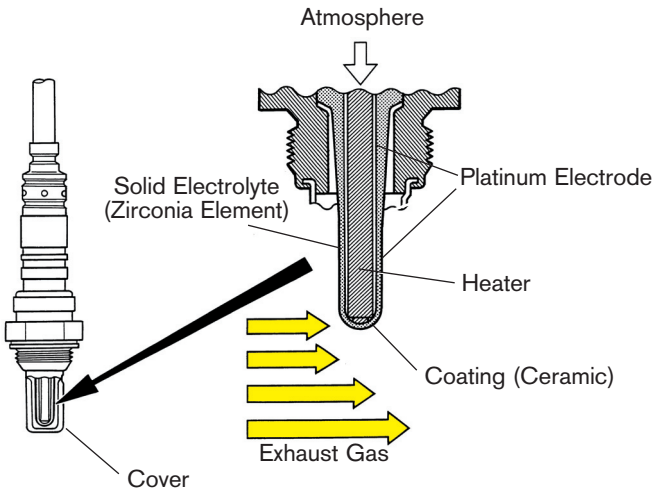

Fig. 2-78

T852f085/T852f086

Air/Fuel Ratio Sensor

The Air/Fuel Ratio (A/F) sensor is similar to the narrow range oxygen sensor. Though it appears similar to the oxygen sensor, it is constructed differently and has different operating characteristics.

The A/F sensor is also referred to as a wide range or wide ratio sensor because of its ability to detect air/fuel ratios over a wide range.

The advantage of using the A/F sensor is that the ECM can more accurately meter the fuel reducing emissions. To accomplish this, the A/F sensor:

- operates at approximately 650°C (1200°F), much hotter than the oxygen sensor 400°C (750°F).
- changes its current (amperage) output in relation to the amount of oxygen in the exhaust stream.

A/F Sensor Detecting Circuit

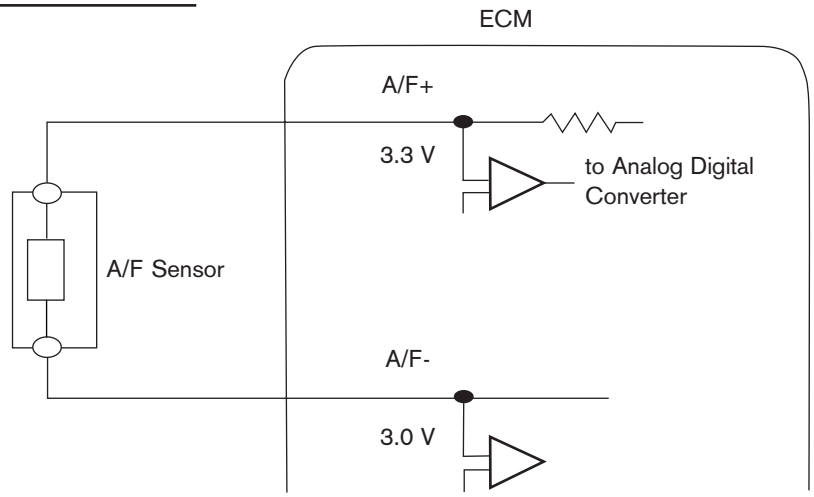

Fig. 2-79
T852f087

Operation A detection circuit in the ECM detects the change and strength of current flow and puts out a voltage signal relatively proportional to exhaust oxygen content.

NOTE This voltage signal can only be measured by using the Diagnostic Tester or OBD II compatible scan tool. The A/F sensor current output cannot be accurately measured directly. If an OBD II scan tool is used, refer to the Repair Manual for conversion, for the output signal is different.

The A/F sensor is designed so that at stoichiometry, there is no current flow and the voltage put out by the detection circuit is 3.3 volts. A rich mixture, which leaves very little oxygen in the exhaust stream, produces a negative current flow. The detection circuit will produce a voltage below 3.3 volts. A lean mixture, which has more oxygen in the exhaust stream, produces a positive current flow. The detection circuit will now produce a voltage signal above 3.3 volts.

Exhaust Oxygen Content	Current Flow	Voltage Signal	Air/Fuel Mixture Judged To Be:
Low Oxygen Content →	- Direction →	Below 3.3 Volts →	Rich
Stoichiometry →	0 →	3.3 Volts →	14.7:1
High Oxygen Content →	+ Direction →	Above 3.3 Volts →	Lean

NOTE The A/F sensor voltage output is the opposite of what happens in the narrow range oxygen sensor. Voltage output through the detection circuit increases as the mixture gets leaner.

Also, the voltage signal is proportional to the change in the air/fuel mixture. This allows the ECM to more accurately judge the exact air/fuel ratio under a wide variety of conditions and quickly adjust the amount of fuel to the stoichiometric point. This type of rapid correction is not possible with the narrow range oxygen sensor. With an A/F sensor, the ECM does not follow a rich lean cycle. Refer to Closed Loop Fuel Control in the Fuel Injection chapter for more information.

HINT Think of the A/F sensor as a generator capable of changing polarity. When the fuel mixture is rich (low exhaust oxygen content), the A/F generates current in the negative (-) direction. As the air/fuel mixture gets leaner (more oxygen content), the A/F sensor generates current in the positive (+) direction. At the stoichiometric point, no current is generated.

The detection circuit is always measuring the direction and how much current is being produced. The result is that the ECM knows exactly how rich or lean the mixture is and can adjust the fuel mixture much faster than the oxygen sensor based fuel control system. Therefore, there is no cycling that is normal for a narrow range oxygen sensor system. Instead, A/F sensor output is more even and usually around 3.3 volts.

Oxygen Sensor Diagnosis Service

There are several factors that can affect the normal functioning of the oxygen sensor. It is important to isolate if it is the oxygen sensor itself or some other factor causing the oxygen sensor to behave abnormally. See Course L874 Technician Handbook book for more information.

A contaminated oxygen sensor will not produce the proper voltages and will not switch properly. The sensor can be contaminated from engine coolant, excessive oil consumption, additives used in sealants, and the wrong additives in gasoline. When lightly contaminated, the sensor is said to be "lazy," because of the longer time it takes to switch from rich to lean and/or vice versa. This will adversely affect emissions and can produce driveability problems.

Many factors can affect the operation of the oxygen sensor, such as a vacuum leak, an EGR leak, excessive fuel pressure, etc.

It is also very important that the oxygen sensor and heater electrical circuits be in excellent condition. Excessive resistance, opens, and shorts to ground will produce false voltage signals.

In many cases, DTCs or basic checks will help locate the problem.

Oxygen Sensor Heater Circuit

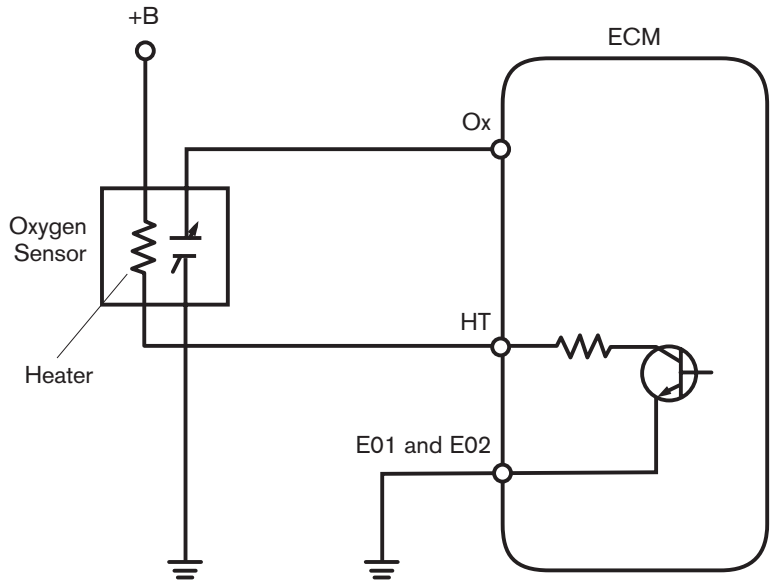

Fig. 2-80
T852f088

Oxygen Sensor Heater

For the oxygen sensor to deliver accurate voltage signals quickly, the sensor needs to be heated. A PTC element inside the oxygen sensor heats up as current passes through it. The ECM turns on the circuit based on engine coolant temperature and engine load (determined from the MAF or MAP sensor signal). This heater circuit uses approximately 2 amperes.

The heater element resistance can be checked with a DVOM. The higher the temperature of the heater, the greater the resistance.

The oxygen sensor heater circuit is monitored by the ECM for proper operation. If a malfunction is detected, the circuit is turned off. When this happens, the oxygen sensor will produce little or no voltage, and possibly set DTC P0125.

Heater Diagnosis

The heater can be checked for resistance with a DVOM. The higher the temperature, the higher the resistance.

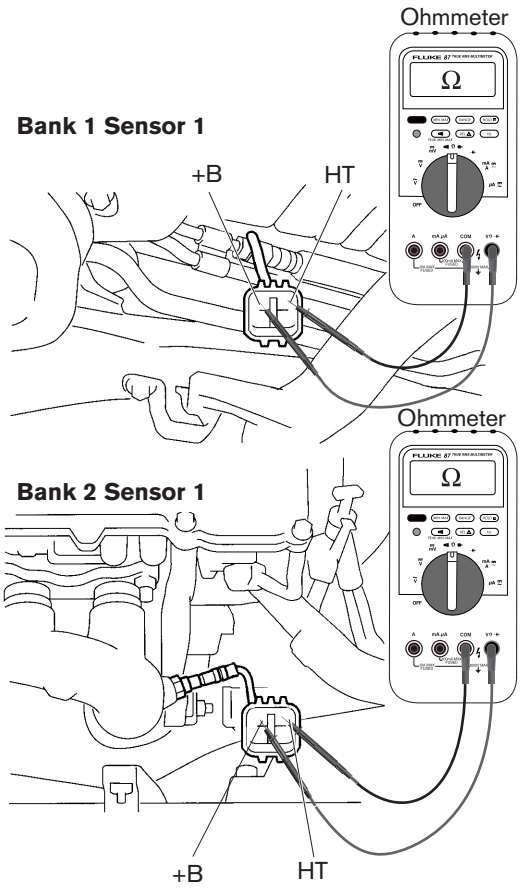

Fig. 2-81
T852f350

Air/Fuel Ratio Heater Circuit

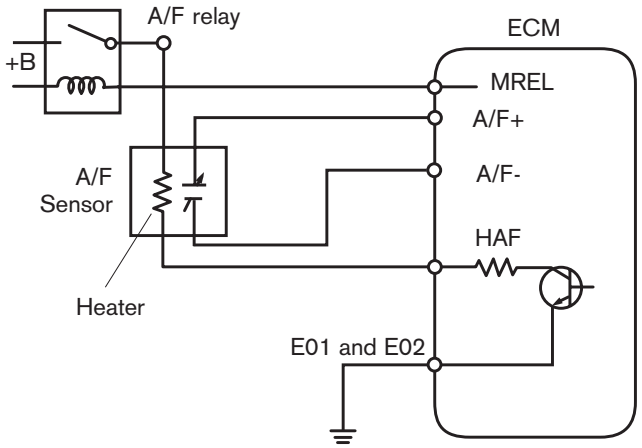

Fig. 2-82
T852f091

Air/Fuel Ratio Sensor Heater

This heater serves the same purpose as the oxygen sensor heater, but there are some very important differences.

Engines using two A/F sensors use a relay, called the A/F relay, which is turned on simultaneously with the EFI Relay. This heater circuit carries up to 8 amperes (versus 2 amperes for O_2 heater) to provide the additional heat needed by the A/F sensor.

This heater circuit is duty ratio controlled pulse width modulator (PMW) circuit. When cold, the duty ratio is high. The circuit is monitored for proper operation. If a malfunction is detected in the circuit, the heater is turned off. When this happens, the A/F sensor will not operate under most conditions and DTC P0125 will set.

Air/Fuel Ratio Sensor Heater Diagnosis

Diagnosis of the heater is similar to the oxygen sensor. Since the A/F sensor requires more heat, the heater is on for longer periods of time and is usually on under normal driving conditions.

Because the heater circuit carries more current, it is critical that all connections fit properly and have no resistance.

The relay is checked in the same manner as other relays.

Knock Sensor

The Knock Sensor detects engine knock and sends a voltage signal to the ECM. The ECM uses the Knock Sensor signal to control timing.

Engine knock occurs within a specific frequency range. The Knock Sensor, located in the engine block, cylinder head, or intake manifold is tuned to detect that frequency.

Knock Sensor Location

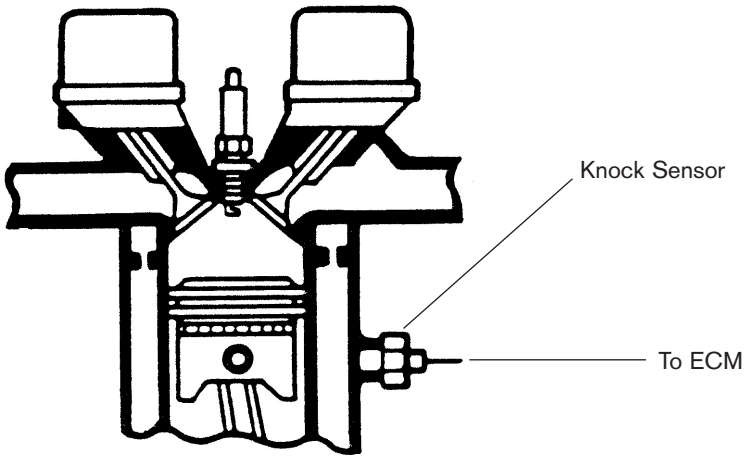

Fig. 2-83
T852f112

Inside the knock sensor is a piezoelectric element. Piezoelectric elements generate a voltage when pressure or a vibration is applied to them. The piezoelectric element in the knock sensor is tuned to the engine knock frequency.

Knock Sensor

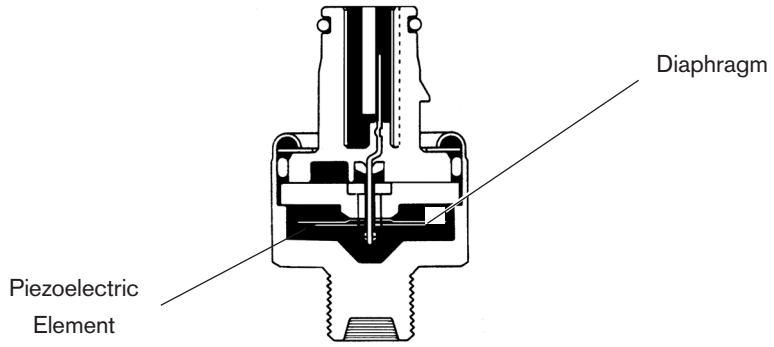

Fig. 2-84
T852f113

Knock Sensor Voltage Generation

When knock occurs, the voltage output increases.

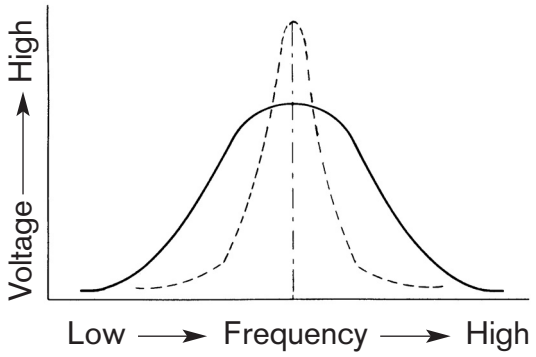

Fig. 2-85
T852f114

Knock Sensor

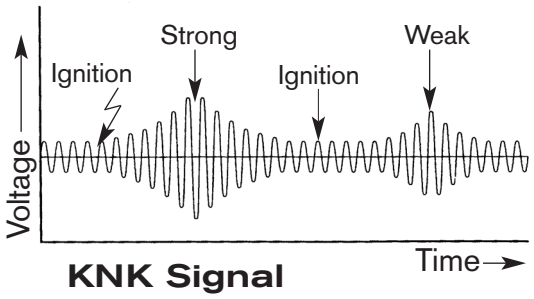

Fig. 2-86
T852f115

The vibrations from engine knocking vibrate the piezoelectric element generating a voltage. The voltage output from the Knock Sensor is highest at this time.

Notes

WORKSHEET 2–1
Position/Mode Switches and Circuits

Vehicle	Year/Prod. Date	Engine	Transmission

Technician Objectives

With this worksheet, you will learn to test position/mode circuits using the required tools and equipment, retrieve and apply the needed service information, retrieve and interpret service data information.

Tools and Equipment

- Vehicle Repair Manual
- Vehicle EWD
- Diagnostic Tester
- Hand Tool Set

Section 1

The ECM needs to know the position of a component or when a circuit is being activated. A switch connected to the ECM is often used. The switch can be electrically connected to the ECM in two fundamental ways:

- The switch is between the Battery and ECM.
- The switch is between the ECM and Ground.

Section 2

Switch Between Battery and ECM

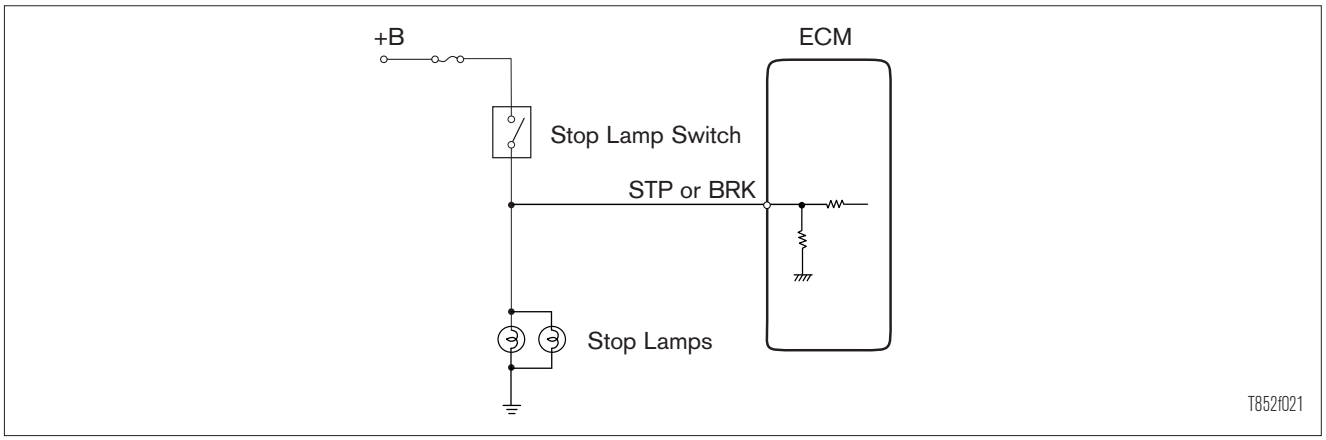

When the switch is located between the battery and ECM, the switch controls the voltage to the ECM. A very common example is the Stop Lamp Switch. When the driver steps on the brake, the switch closes completing the circuit. The ECM detects battery voltage and "knows" the vehicle is braking.

1. Connect the Diagnostic Tester to the ECM, scroll to Stop Light Switch and observe the reading.
2. Step on the brake and note the change.
3. Using the appropriate EWD and/or RM, locate the STP terminal.

   STP Connector No: _____ Pin No: _____ Wire Color: _____

4. Connect the positive (+) lead of the DVOM to the STP terminal, the Negative (-) lead to ground. Switch the DVOM to DC Volts.
   note the voltage reading: _____

5. Step on the brake, and note the voltage reading: _____
   Compare the Diagnostic Tester reading to the DVOM reading with brake ON/OFF. What is the difference?

   _____

Switch Between Battery And Ground

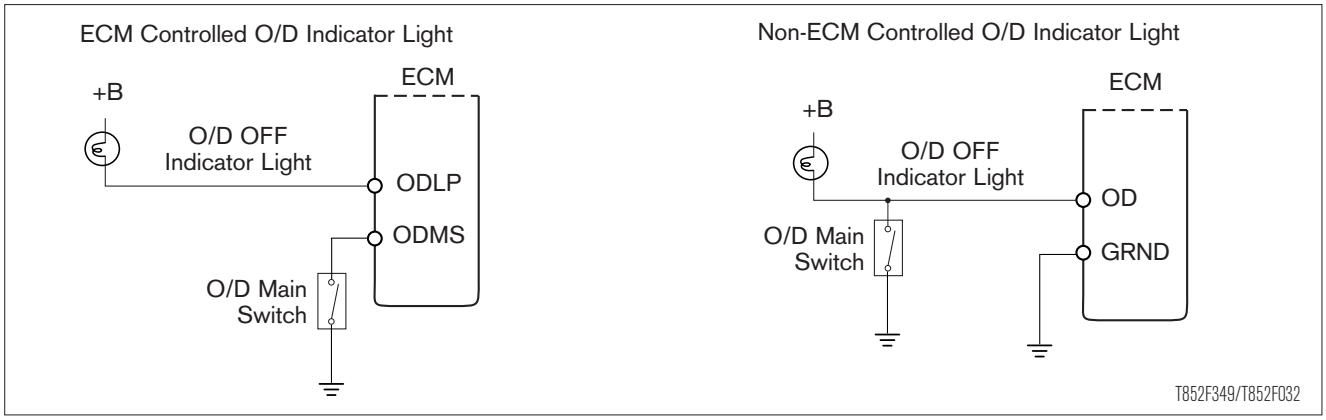

6. When the switch is located between the ECM and Ground, the switch controls the voltage to ground. An example is the Overdrive (O/D) main switch. (If O/D is unavailable, select another vehicle).

7. Connect the Diagnostic Tester to the ECM, scroll to O/D Switch, and observe the reading.

8. Locate the Overdrive(O/D) main switch terminal.

   Connector No: _____ Pin No: _____ Wire Color: _____

9. Predict the voltage at the Overdrive (O/D) main switch terminal with the Light Off _____ and with the light On _____.

10. Connect the positive (+) lead of the DVOM to the O/D main switch terminal, the negative (-) lead to ground. Switch the DVOM to DC Volts.

O/D Switch Position	Voltage @ ECM	Diagnostic Tester Shows
O/D Switch OFF		
O/D Switch ON		

Switch Position

As a rule, the EWD shows the switch in it's natural, at rest position. Most switches connected to the ECM are normally open switches, regardless if they are on the power or ground side.

The stop light switch is a normally open switch. The switch closes when the brake pedal; is stepped on.
From the EWD, locate the switches connected to the ECM. Identify if they are:

- Power side/ground side switched.
- Normally open/closed.

Fill in the Chart Blanks:

Section 3

Switch	Power/Ground Side	Normally Open/Closed	Voltage Signal at Rest	Voltage When Activated
Stop Light				
OD				
Power Steering				

Mode Circuits

There are times when the ECM needs to know what systems are being activated. For example, when the engine is being started, the ECM receives a signal at the STA terminal.

At the designated vehicle, locate the starter (STA) and electric load circuit (ELS) connected to the ECM and terminals. Connect the Diagnostic Tester and DVOM to the appropriate terminals. Try to predict the voltages in each state and compare to the readings.

Circuit	PREDICT The Voltage Signal with Circuit ON	PREDICT The Voltage Signal with Circuit OFF	ACTUAL DVOM Reading		ACTUAL Diagnostic Tester	
			ON	OFF	ON	OFF
STA						
ELS						
4WD						

Notes

Position/Mode Switches and Circuits

Name _____ Date _____

Review this sheet as you are doing the worksheet. Check each category after completing the worksheet and instructor presentation. Ask the instructor if you have questions. The comments section is for you to write where to find the information, questions, etc.

Topic	*I have questions*	*I know I can*	Comment
Locate components in the switch sensing circuits using the EWD and RM.			
Find wire colors, pin numbers in the switch sensing circuit using the EWD and RM.			
Identify a normally closed and normally open switch.			
Identify the switch sensors and position from the Data List.			
Measure the voltage signal of the switch sensor at the ECM.			
Test a power side switch and compare to specifications to determine condition.			
Test a ground side switch and compare to specifications to determine condition.			
Check and retrieve relevant DTCs.			
Describe the difference between a power side and ground side switched circuit.			
Describe the difference between a normally closed and normally open switch.			

Notes

WORKSHEET 2–2
Temperature Sensors

Vehicle	Year/Prod. Date	Engine	Transmission

Technician Objectives

With this worksheet, you will learn to test temperature sensors and circuits using the required tools and equipment, retrieve and apply the needed service information, retrieve and interpret service data information.

Tools and Equipment

- Vehicle Repair Manual
- Vehicle EWD
- Diagnostic Tester & DVOM
- Hand Tool Set
- Vehicle at room temperature

Section 1

Engine Coolant Temperature (ECT) and Intake Air Temperature (IAT) Operation

1. Connect the Diagnostic Tester and go to the Data List. Observe and record the IAT and ECT temperature. Do they match?

   _____

   Why is this important?

   _____

2. Using the Repair Manual/EWD, locate the THW and E2 terminals.

   THW Connector No. _____ Pin No. _____ Wire Color _____

   E2 Connector No. _____ Pin No. _____ Wire Color _____

3. Connect the positive (+) lead of the DVOM to the THW terminal and the negative (-) lead to terminal E2. With the ignition key in the run position, record the voltage: _____

4. Using the Repair Manual/EWD locate the THA terminal.

   THA Connector no. _____ Pin No. _____ Wire Color _____

5. Move only the positive (+) lead of the DVOM to the THA terminal and record the voltage.

   _____

   HOLD the IAT sensor in your hand. What happened to the voltage and temperature?

   _____

6. Turn the Ignition key off.

7. Disconnect the IAT at the sensor. Using the test lead connector and DVOM, measure the resistance of the IAT. Does it match the Repair Manual chart?

   _____

8. HOLD the IAT sensor in your hand? What happened to the resistance and temperature?

   _____

9. Reconnect the IAT.

Section 2

Make sure the Parking Brake is securely set and exhaust hose is connected.

Connect the positive (+) lead of the DVOM to the THW terminal and the negative (-) lead to terminal E2.

Start the engine and observe the ECT reading on the Diagnostic Tester and the DVOM voltage reading. Plot the temperature and voltage on the chart below.

Temp (°F)	80	90	100	110	120	130	140	150	160	170	180
Volts											

Complete the following:

1. As the engine gets warmer, the ECT voltage signal is: _____

2. As the engine gets warmer, ECT resistance is: _____

3. Note the difference in voltage every 10°F. What happened to the change in voltage signal the last 40°F?

   _____

4. Shut the engine off, then turn the ignition key on. What should happen to ECT voltage signal?

   _____

5. Does the DVOM and Diagnostic Tester confirm your prediction?

   _____

Section 3

The following exercises will help you understand the Repair Manual diagnostic procedures.

Create an Open Circuit Fault

1. Disconnect the IAT (or ECT) at the sensor, and record the temperature and circuit voltage at the ECM:

   _____

Create a Short Circuit Fault

1. At the sensor connector, use a wire to connect the two terminals together and record the sensor temperature reading and voltage.

2. At the sensor connector, ground the TH_ wire. Is the reading approximately the same?

   _____

3. What DTC was created?

   _____

Repair Manual Logic

1. A customer vehicle comes in with DTC P0115, the Diagnostic Tester reads -40°(F). You would look for what type of circuit fault?

   _____

2. What step would you take next?

   _____

Section 4

Solving Open Circuit Faults

1. An open in the ECT or IAT will read on the DT: _____; DVOM _____

This step determines if the fault is with ECT or the circuit.

A jumper wire is inserted at the sensor connector. This creates a shorted circuit and the temperature should go high (hot). If it does:

What must be good?

_____

What must be at fault?

_____

If the temperature did not go high (hot), then the problem is with:

_____

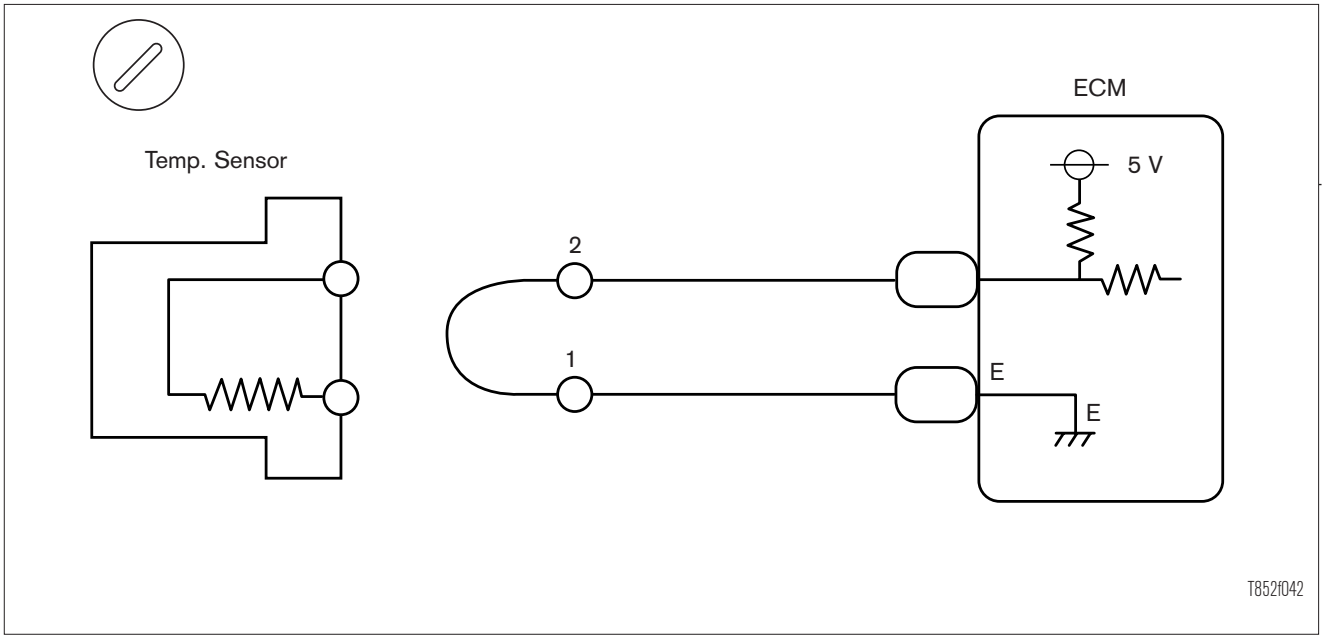

Next, determine if the problem is with the circuit or the ECM.

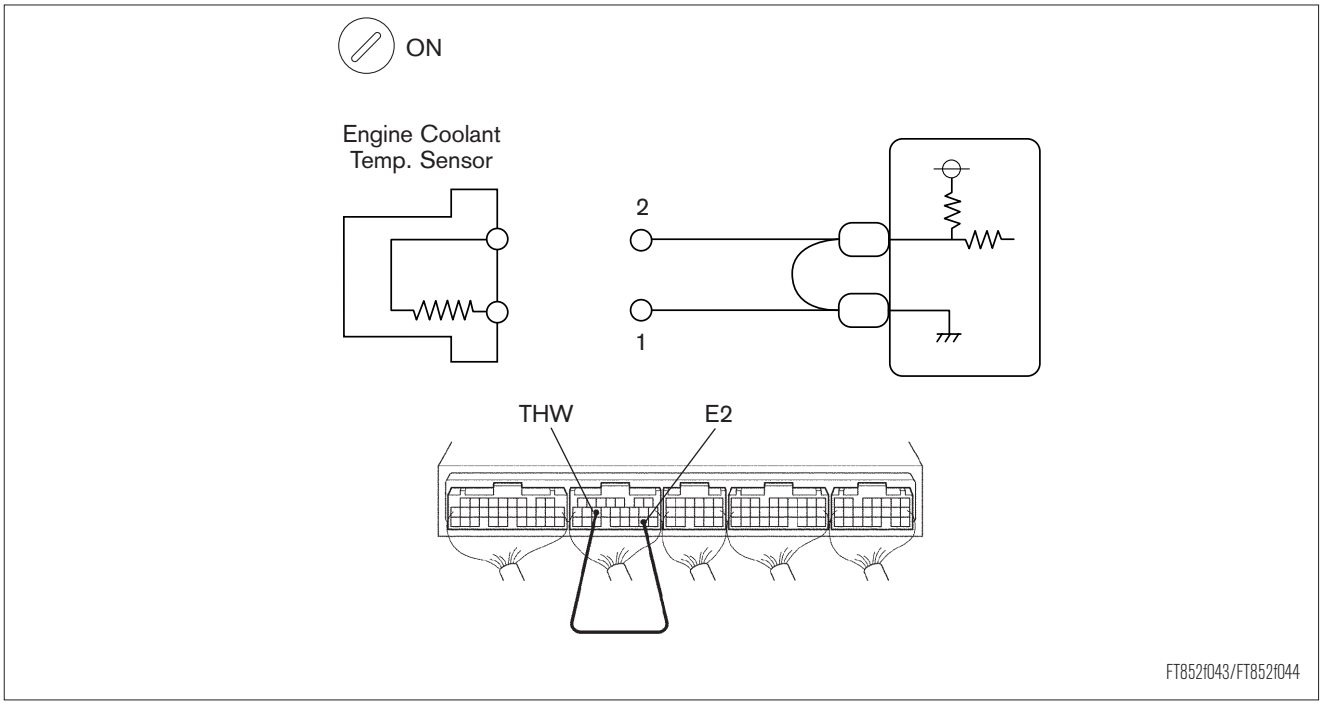

With a jumper wire between the THW terminal and E2 at the ECM, temperature should go high.

If it does, the problem is in:

_____

If it does not go high it is either the:

_____

Solving Shorted Circuit Faults

1. A shorted ECT or IAT will read on the DT: _____; DVOM _____

   Disconnecting the temperature sensor creates an open circuit and the temperature should go extremely low (cold). If it does, _____ must have been shorted to ground.

   If not, the problem must be with the

   _____ or _____ .

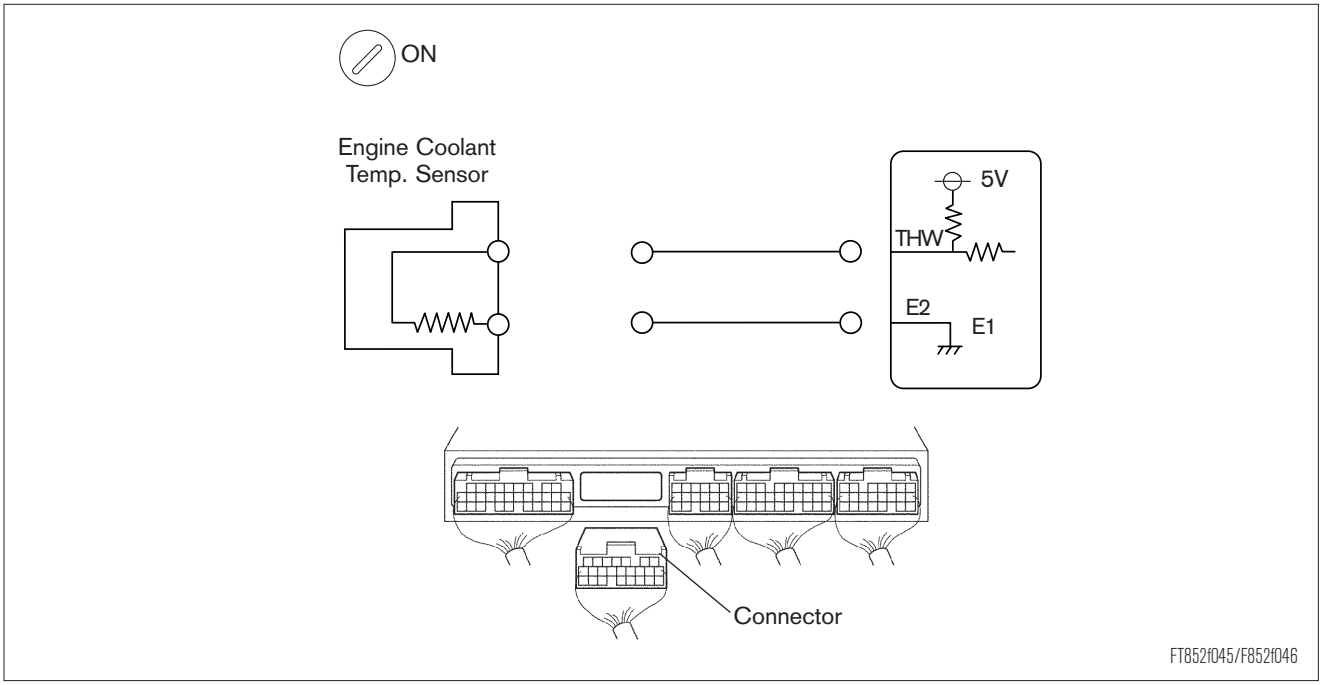

With the connector at the ECM disconnected, temperature should go low (cold). If it does, the fault is:

_____

If not, the problem is with:

_____

Temperature Sensors

Name _____ Date _____

Review this sheet as you are doing the worksheet. Check each category after completing the worksheet and instructor presentation. Ask the instructor if you have questions. The comments section is for you to write where to find the information, questions, etc.

Topic	*I have questions*	*I know I can*	Comment
Locate components in the temperature sensing circuits using the EWD and RM.			
Find wire colors, pin numbers in the temp. sensing circuit using the EWD and RM.			
Locate the temperature reading from the Data List.			
Measure the voltage drop of the sensor.			
Test VC (supply voltage) and compare to specifications to determine condition.			
Test E (ground line) and compare to specifications to determine condition.			
Test sensor resistance and compare to specifications to determine condition.			
Check and retrieve relevant DTCs.			
Describe purpose of ECT and IAT.			
Describe ECM strategy if the ECT and IAT circuit fails.			

Notes

WORKSHEET 2–3
Position Sensors

Vehicle	Year/Prod. Date	Engine	Transmission

Technician Objectives

With this worksheet, you will learn to test position sensors and circuits using the required tools and equipment, retrieve and apply the needed service information, retrieve and interpret service data information.

Tools and Equipment

- Vehicle Repair Manual
- Vehicle EWD
- Diagnostic Tester
- Hand Tool Set with DVOM
- Vehicle at room temperature
- Pencil

Section 1

The ECM needs to know the position of some components such as throttle valve position, EGR valve height, etc.

1. At the bottom of this page, draw a dark line approximately 1/4" wide. Connect the supply leads to VC and E2. Attach the DVOM ground lead to vehicle ground. Turn the ignition key on. With positive (+) lead of the DVOM touching VC, the DVOM should read 5V. Now slowly move the positive (+) lead on the drawn line towards E2 and note the DVOM reading. What happened to the voltage as the lead moved closer to E2?

   _____

   The strength of the voltage signal is how the ECM determines the position of the component.

Section 2

2. With the Diagnostic Tester connected to the vehicle, turn the ignition switch to ON and note the throttle position. Slowly depress the throttle and note the change on the Diagnostic Tester.

3. Connect a DVOM between the VTA and E2 terminals. Slowly depress the throttle and note the voltage on the DVOM. Did the voltage increase with throttle opening?

Just like the beginning exercise you did, the ECM measures position by the strength of the voltage signal.

The ECM sends 5 volts to the TPS on the VC wire. Voltage is then divided between the signal wire (VTA) and ground (E2). The closer the signal arm moves to the supply voltage, the higher the voltage signal.

Repair Manual Checks

The following explanations describe common diagnostic procedures found in the Repair Manual on throttle position sensors. You may find discrepancies with the order in the RM.

Diagnostic Tester

1. Compare throttle position to the Diagnostic Tester data at idle and WOT.
2. Do the readings match specifications?

_____

Check voltage between terminal VC of the TPS and body ground.

1. Disconnect the TPS connector and measure the voltage at the VC terminal. It should be about 5 volts. If you get this reading it confirms that the wire is good and ECM is providing the correct voltage. If not, the problem may be with the circuit or ECM.

2. With the TPS disconnected, what did the DT read? _____

Check voltage between terminals VC and E2 of ECM connector.

This test confirms that the ECM is putting out the necessary supply voltage. You would do this test if you did not measure 5 volts at the VC terminal at the TPS connector.
If you get 5 volts at the ECM connector, the problem is in the

_____.

If you did not get 5 volts, the ECM is at fault.

Inspect Throttle Position Sensor

On some models, you will find TPS checks in the Throttle Body On Vehicle Inspection in the SF Section.

1. With DVOM measure the resistance of the TPS at the specified terminal locations. What terminals are used?

_____

2. Does the TPS meet specifications?

_____

Check voltage between terminals VTA and E2 of ECM connector.

This test is the same as in the exercise you did above. This test is to determine if the circuit or the ECM is at fault. If voltage readings are in specifications, the ECM may be at fault. (Intermittent problems in the circuit or TPS may also be the problem.) If voltage readings are not in spec., there may be an open or short in harness and connector between ECM and TPS on the VTA or E2 line.

1. If the VTA line were shorted to ground, what would the voltage reading be?

_____

2. If the VTA line were open, what would the voltage reading be?

_____

3. What test(s) can be made to determine the difference?

_____

4. If the E2 line were open, VTA voltage will be approximately?

_____

Position Sensors

Name _____ Date _____

Review this sheet as you are doing the worksheet. Check each category after completing the worksheet and instructor presentation. Ask the instructor if you have questions. The comments section is for you to write where to find the information, questions, etc.

Topic	*I have questions*	*I know I can*	Comment
Locate components in the position sensing circuits using the EWD and RM.			
Find wire colors and pin numbers in the position sensing circuit using the EWD and RM.			
Locate the TPS/EGR VPS reading from the Data List.			
Measure the voltage signal of the sensor.			
Test VC (supply voltage) and compare to specifications to determine condition.			
Test E (ground line) and compare to specifications to determine condition.			
Test sensor resistance and compare to specifications to determine condition.			
Check and retrieve relevant DTCs.			
Describe purpose of TPS/EGR VPS.			
Describe ECM strategy if the TPS circuit fails.			

Notes

WORKSHEET 2–4
Mass Airflow (MAF) Sensors

Vehicle	Year/Prod. Date	Engine	Transmission

Technician Objectives

With this worksheet, you will learn to test MAF sensor and circuits using the required tools and equipment, retrieve and apply the needed service information, retrieve and interpret service data information.

Tools and Equipment

- Vehicle Repair Manual
- Vehicle EWD
- Diagnostic Tester & DVOM
- Hand Tool Set

Section 1

The MAF sensor is needed by the ECM to measure the volume of air entering the engine. From the air volume measurement, the ECM can inject the correct amount of fuel and adjust the ignition timing.

List each terminal on the MAF connector and explain the purpose.

Terminal	Purpose

Section 2

MAF Operation

1. With the DT, select the MAF reading from the Data List.

   _____

2. Locate MAF signal wire at:

   ECM connector: _____ Terminal: _____ Wire Color: _____

3. Connect the positive (+) lead of the DVOM to MAF signal terminal. Connect negative (-) lead to E2.
4. Slowly accelerate the engine in the increments shown and record voltage and grams/sec.

RPM	Idle	1000	1250	1500	1750	2000	2250	2500	2750	3000
G/S										
Volts										

5. What happened to airflow and voltage as RPMs increased?

_____

6. When finished, shut the engine off.
7. Remove the MAF from the air induction hose, but leave electrically connected. Start the engine. What happened?

_____

8. If the MAF sensor were plugged with debris, what is the most likely engine symptom?

_____

Section 3

MAF Sensor Component Check

According to the Repair Manual, perform the MAF test procedure for operation.

1. What indicates a good MAF sensor?

_____

2. What DTCs are related to the MAF circuit?

_____

3. What MAF DTC is a one trip? Two trip?

_____

4. What are the Detecting Conditions for the one trip? Two trip?

_____

5. Does this have a Fail-Safe condition?

_____

Mass Airflow (MAF) Sensors

Name _____ Date _____

Review this sheet as you are doing the worksheet. Check each category after completing the worksheet and instructor presentation. Ask the instructor if you have questions. The comments section is for you to write where to find the information, questions, etc.

Topic	*I have questions*	*I know I can*	Comment
Locate components in the MAF circuit using the EWD and RM.			
Find wire colors, pin numbers in the MAF circuit using the EWD and RM.			
Locate the MAF reading from the Data List.			
Measure the voltage signal of the sensor.			
Test supply voltage and compare to specifications to determine condition.			
Test E (ground line) and compare to specifications to determine condition.			
Test sensor performance and compare to specifications to determine condition.			
Check and retrieve relevant DTCs.			
Describe purpose of the MAF sensor.			
Describe ECM strategy if the MAF circuit fails.			

Notes

WORKSHEET 2–5
Position/Speed Sensors

Vehicle	Year/Prod. Date	Engine	Transmission

Technician Objectives

With this worksheet, you will learn to test camshaft and crankshaft sensors using the required tools and equipment, retrieve and apply the needed service information, retrieve and interpret service data information.

Tools and Equipment

- Vehicle Repair Manual
- Vehicle EWD
- Diagnostic Tester
- DVOM
- Hand Tool Set

Section 1

The ECM needs to know position and speed of many components such as the engine crankshaft, camshaft, vehicle speed, transmission, etc.

Camshaft Position (Variable Valve Timing) Sensor

1. Connect the Diagnostic Tester Autoprobe and DVOM to the camshaft sensor circuit at the ECM.

   ECM terminals: _____
2. Set the Diagnostic Tester to the Oscilloscope/autoprobe function, refer to Repair Manual for settings

   Connect DVOM and set to AC volts, Hz.
3. Start the engine and draw or print the waveform at IDLE. What is the frequency? _____

IDLE

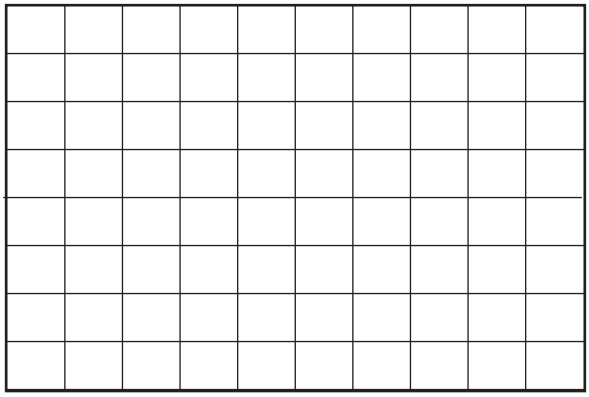

2000 RPM

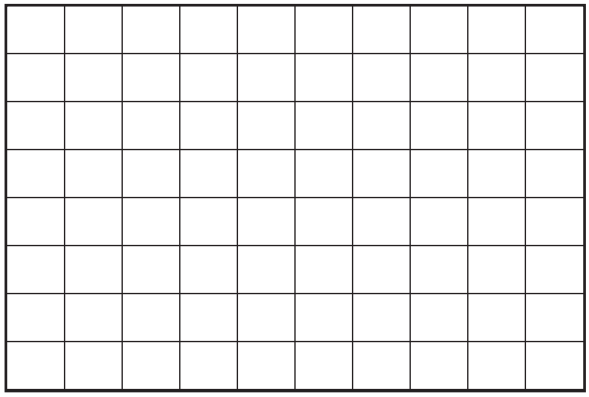

4. Does the waveform match the Repair Manual waveform?

   _____
5. Raise engine RPM to 2000. What happened to the waveform and frequency?

   _____

Crankshaft Position Sensor

1. Connect the Diagnostic Tester Autoprobe and DVOM to the crankshaft position sensor signal.
   ECM terminals: _____
2. Start the engine and at idle RPM note the waveform.
3. Does the waveform match the Repair Manual waveform?

   _____

4. Draw or print the waveform at IDLE. What is the frequency? _____

IDLE

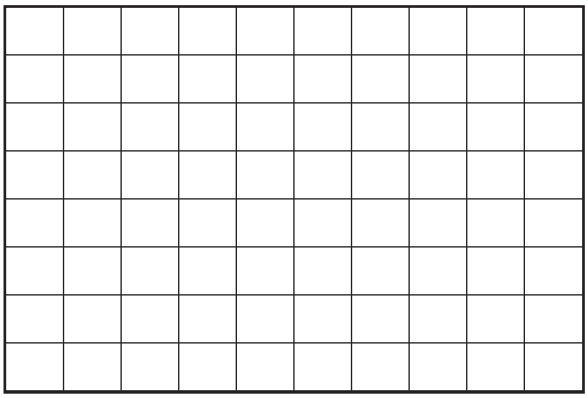

2000 RPM

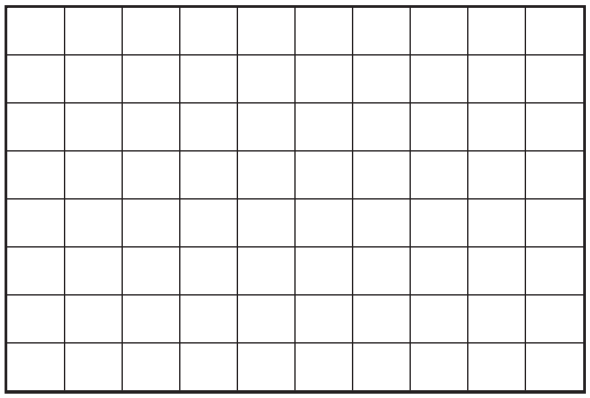

5. Raise engine RPM to 2000. What happened to the waveform and frequency?

   _____

6. What sections in the RM contain diagnostic information on these sensors?

   _____

7. What are the coil resistance specifications for the crankshaft and camshaft position sensors?

   _____

Position/Speed Sensors

Name _____ Date _____

Review this sheet as you are doing the worksheet. Check each category after completing the worksheet and instructor presentation. Ask the instructor if you have questions. The comments section is for you to write where to find the information, questions, etc.

Topic	*I have questions*	*I know I can*	Comment
Locate components in the crankshaft and camshaft sensing circuits using the EWD and RM			
Find wire colors, pin numbers in the crankshaft and camshaft sensing circuits using the EWD and RM			
Locate the crankshaft and camshaft readings from the Data List			
Measure the voltage signal of the sensors with a DVOM			
Observe the voltage signal pattern of the sensors with an oscilloscope			
Test wires for continuity and compare to specifications to determine condition			
Test sensor resistance and compare to specifications to determine condition			
Check and retrieve relevant DTCs			
Describe purpose of crankshaft and camshaft sensors			
Describe ECM strategy if the crankshaft circuit fails			
Describe ECM strategy if the camshaft circuit fails			

Notes

WORKSHEET 2–6
Oxygen Sensor

Vehicle	Year/Prod. Date	Engine	Transmission

Technician Objectives

With this worksheet, you will learn to test oxygen sensor and circuits using the required tools and equipment, retrieve and apply the needed service information, retrieve and interpret service data information.

Tools and Equipment

- Vehicle Repair Manual
- Vehicle EWD
- Diagnostic Tester
- DVOM
- Hand Tool Set

Section 1

Disconnect the oxygen sensor connector. Using a DVOM, measure the heater element resistance and compare to specifications.

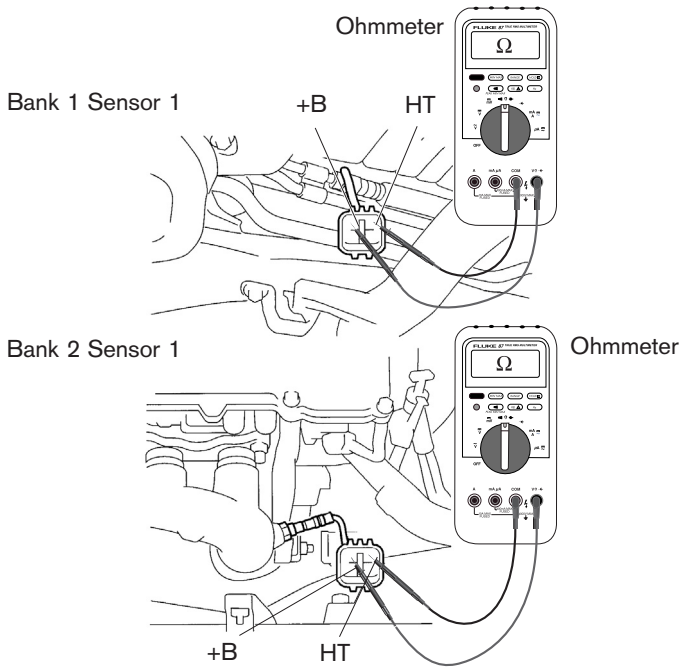

Heater Resistance Test

T852f350

1. Record resistance readings B1S1 _____ ohm, B2S1 _____ ohms.

   Was the resistance within specification?

   _____

2. Use the EWD to trace the oxygen sensor heater circuit. What component supplies power to the oxygen sensor heater?

   _____

3. With the key on and engine off, at the HTL or HTR terminal of the ECM, measure oxygen sensor heater voltage: _____
4. Start the engine. What happened as the engine warmed up?

   _____

   _____

5. What DTCs could set if the heater did not work?

   _____

Section 2

Oxygen Sensor Signal

1. Connect the Diagnostic Tester and scroll to the oxygen sensor.
2. Locate the oxygen sensor terminal on the ECM. Connect the positive (+) lead of the DVOM to the oxygen sensor signal terminal, connect the negative (-) lead to E2. Set the DVOM to the DC scale.
3. With vehicle in park, exhaust hose connected, parking brake set, start the engine. Note that initial readings will change based on engine temperature.
4. After the engine has warmed up, record the oxygen sensor signal at idle. Are the readings normal?

   _____

5. Briefly snap the throttle wide open and release. What happened to the oxygen sensor signal?

   _____

6. Hold the engine at 2,500 RPM. What happened to Oxygen sensor readings?

   _____

7. With the Diagnostic Tester, go to the O2S/RPM check. (Instructions found in Diagnostic Toolset manual.) Raise engine to 1000 RPM. Draw the pattern on the following graph.

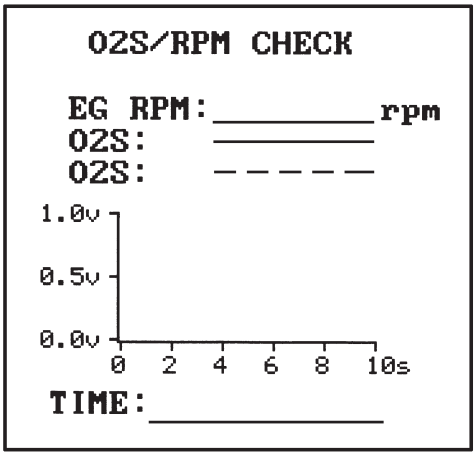

T852f359

Raise engine to 2500 RPM. Draw the pattern on the following graph.

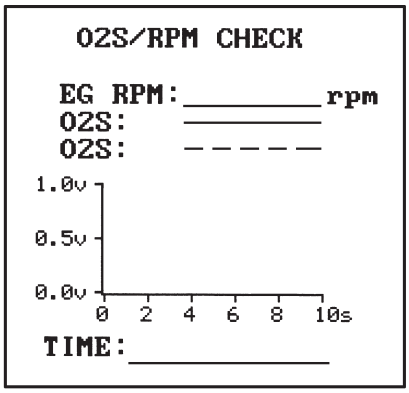

T852f359

1. What happened to oxygen sensor frequency?

   _____

2. With the engine at idle, create an intake manifold vacuum leak, by disconnecting a vacuum hose. What happened to the O2 sensor reading?

   _____

3. Reconnect the vacuum hose. What happened?

   _____

Section 3

Oxygen Sensor Response

With the engine at operating temperature, go to Data List and note the oxygen sensor voltage signal and Fuel Trim.

1. Disconnect a vacuum hose. Was there a change to oxygen voltage signal and Short Term Fuel Trim?

   _____

2. Reconnect vacuum hose.
3. **Predict** what **will** happen to oxygen sensor signal voltage if more fuel is added?

   _____

4. Go to Injector Volume Active test. Add fuel using the Active Test to increase injector duration. What happened to oxygen sensor voltage signal?

   _____

5. Decrease injector duration. What happened to oxygen sensor signal voltage?

   _____

Section 4

Oxygen Sensor Signal Using AutoProbe

1. Connect AutoProbe to the Diagnostic Tester and calibrate according to the Diagnostic Tester manual. Go to oscilloscope screen. Set the time and voltage according to the instructor's directions. (typically 1 second and 0.2 volts)
2. Connect the AutoProbe to the oxygen sensor signal wire at the ECM. Start the engine and observe the pattern.
3. Draw the pattern. TIME setting _____, VOLT setting _____.

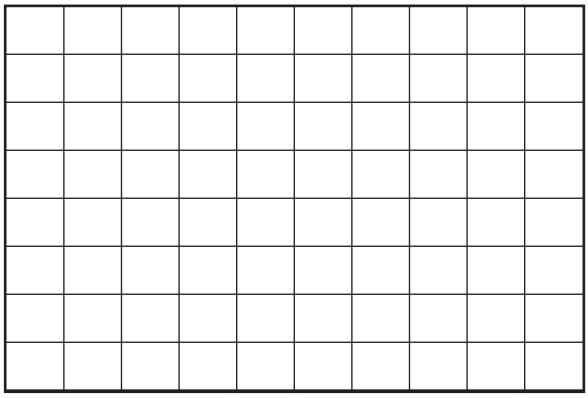

4. What is the major difference between using the AutoProbe and the OS2 Check?

_____

_____

Oxygen Sensor

Name _____ Date _____

Review this sheet as you are doing the worksheet. Check each category after completing the worksheet and instructor presentation. Ask the instructor if you have questions. The comments section is for you to write where to find the information, questions, etc.

Topic	*I have questions*	*I know I can*	Comment
Locate components in the oxygen sensing circuits using the EWD and RM			
Find wire colors, pin numbers in the oxygen sensing circuits using the EWD and RM			
Locate the oxygen sensor readings from the Data List			
Measure the voltage signal of the sensor with DVOM and compare to specifications to determine condition			
Test sensor performance with oscilloscope and compare to specifications to determine condition			
Test heater supply voltage and compare to specifications to determine condition			
Test ground lines and compare to specifications to determine condition			
Check and retrieve relevant DTCs			
Describe purpose of the front oxygen sensor(s)			
Describe ECM strategy if the front oxygen sensor circuit(s) fails			

Notes

WORKSHEET 2–7
Air/Fuel Ratio Sensor

Vehicle	Year/Prod. Date	Engine	Transmission

Technician Objective

With this worksheet, you will learn to test A/F sensor and circuits using the required tools and equipment, retrieve and apply the needed service information, retrieve and interpret service data information.

Tools and Equipment

- Vehicle Repair Manual & EWD
- Diagnostic Tester & DVOM
- Hand Tool Set Vacuum Pump
- Vehicle

Section 1

A/F Sensor Heater

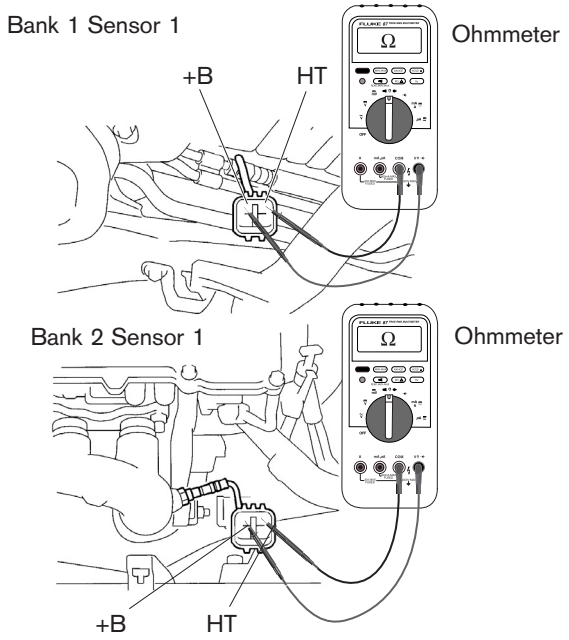

Heater Resistance Test

T852f350

1. Disconnect the A/F sensor connector. Using a DVOM, measure the heater element resistance.

   Record resistance readings B1S1: _____ ohms, B2S1 _____ ohms.

   Was the resistance within specification?

   _____

2. Reconnect A/F sensor. With the key on and engine off, measure A/F sensor heater voltage and body ground.

   _____

3. With the engine cold connect a DVOM and AutoProbe to the A/F sensor heater terminal at the ECM. Go to oscilloscope screen. Set the time and voltage according to the instructor's directions.

   Start the engine and observe the DVOM voltage and oscilloscope pattern.

   What was the voltage at start? _____ Warm idle? _____

   Draw the pattern. TIME setting: _____ VOLT setting: _____

   Increase engine RPM to 2500. Draw the pattern.

4. What happened to the pattern?

   _____

5. Use the EWD to trace the A/F Sensor Heater circuit. What turns on the A/F sensor heater relay?

   _____

6. These tests confirm the operation of which components and continuity of which circuits?

   _____

7. What DTCs could set if the heater did not work?

   _____

Section 2

A/F Sensor Response

Connect the Diagnostic Tester. With the engine at operating temperature, go to Data List, USER DATA and select one of the A/F sensors, Short Term Fuel Trim, and select ENTER. Select F4.

1. Record A/F sensor engine idling. Briefly, snap the throttle wide open and release. What happened?

   _____

2. Disconnect a vacuum hose. Was there a change to A/F voltage signal and Short Term Fuel Trim?

   _____

3. Reconnect vacuum hose.
4. **Predict** what **will** happen to A/F signal voltage if more fuel is added?

   _____

5. Go to Injector Volume Active Test. Increase injector duration. What happened to A/F sensor voltage signal?

   _____

6 Decrease injector duration. What happened to A/F sensor signal voltage?

   _____

Notes

Name _____ Date _____

Review this sheet as you are doing the worksheet. Check each category after completing the worksheet and instructor presentation. Ask the instructor if you have questions. The comments section is for you to write where to find the information, questions, etc.

Topic	*I have questions*	*I know I can*	Comment
Locate components in the A/F Ratio sensing circuits using the EWD and RM			
Find wire colors, pin numbers in the A/F Ratio sensing circuits using the EWD and RM			
Locate the A/F ratio sensor readings from the Data List and compare to specs. to determine condition			
Test sensor performance and compare to specifications to determine condition			
Test heater resistance and compare to specifications to determine condition			
Test heater supply voltage and compare to specifications. to determine condition			
Test ground lines and compare to specs. to determine condition			
Check and retrieve relevant DTCs			
Describe purpose of the A/F sensor(s)			
Describe ECM strategy if the A/F sensor circuit(s) fails			

Notes

WORKSHEET 2–8
Knock Sensor

Vehicle	Year/Prod. Date	Engine	Transmission

Technician Objectives

With this worksheet, you will learn to test knock sensor and circuit using the required tools and equipment, retrieve and apply the needed service information, retrieve and interpret service data information.

Tools and equipment

- Vehicle Repair Manual
- Vehicle EWD
- Diagnostic Tester
- Hand Tool Set

Section 1

The knock sensor is will generate a signal, based on the strength and frequency of the knocking sound caused spontaneous combustion. Engine mechanical noises, such as a worn connecting rod may also be the cause.

Section 2

1. Locate and connect the Autoprobe to the knock sensor terminal on the ECM according to the Repair Manual.
2. Accelerate the engine to the RPM specified in the manual or per instructor's recommendation. Connect DVOM and set to AC volts, Hz. Start the engine and draw or print the waveform.
3. Note the DVOM reading: _____

   Draw the waveform pattern.

4. Does the waveform match the Repair Manual waveform?

   _____

5. What is the frequency? _____

6. List any other test method(s) for the knock sensor.

_____

7. For DTC P0325, what are the Detecting Conditions?

_____

_____

_____

8. Is it 1 or 2 trip logic detection?

_____

Ignition Systems

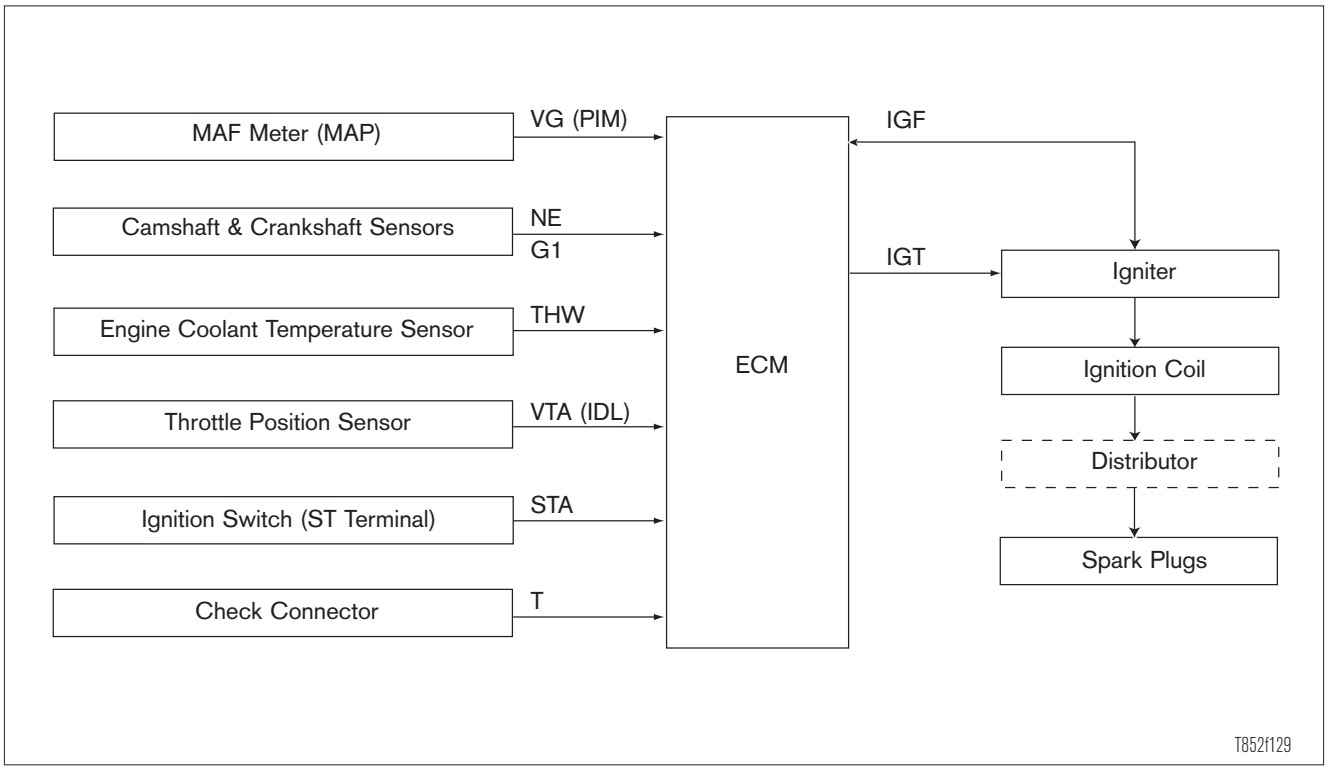

Lesson Objectives

1. Determine the condition of the ignition system based on relevant input sensor signals and output signals
2. Determine the root cause of a failure(s) in the ignition system using appropriate diagnostic procedures

Notes

Ignition Systems

Ignition System Overview

The purpose of the ignition system is to ignite the air/fuel mixture in the combustion chamber at the proper time. In order to maximize engine output efficiency, the air-fuel mixture must be ignited so that maximum combustion pressure occurs at about 10° after top dead center (TDC).

However, the time from ignition of the air-fuel mixture to the development of maximum combustion pressure varies depending on the engine speed and the manifold pressure; ignition must occur earlier when the engine speed is higher and later when it is lower. In early systems, the timing is advanced and retarded by a governor in the distributor.

Combustion Pressure and Duration

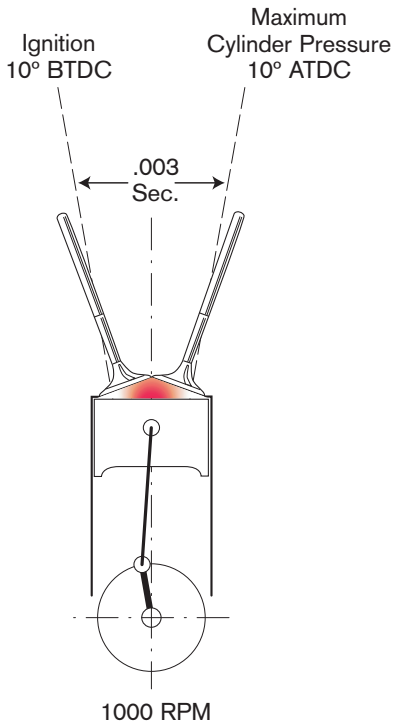

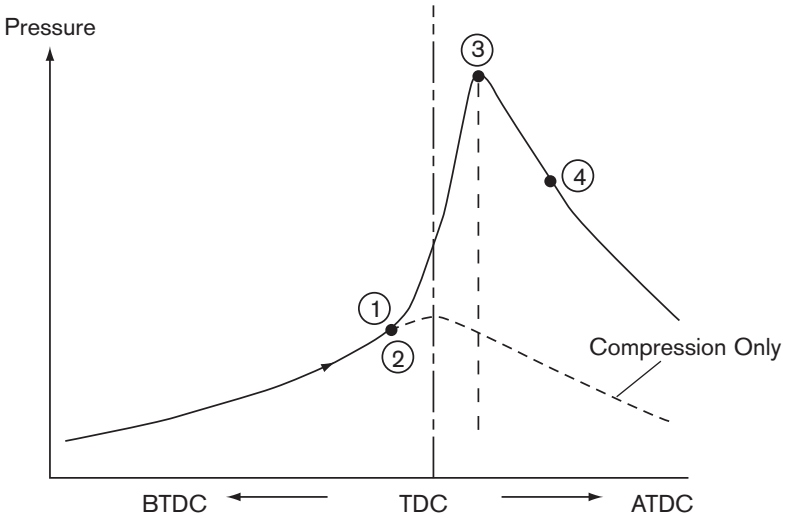

① Ignition
② Combustion Start (Flame Propagation Start)
③ Maximum Combustion Pressure
④ End of Combustion

COMBUSTION PROCESS

Fig. 3-01
T852f125/T852f126

Ignition Advance

Ignition must occur earlier so that the cylinder achieves maximum cylinder pressure as engine RPMs increase.

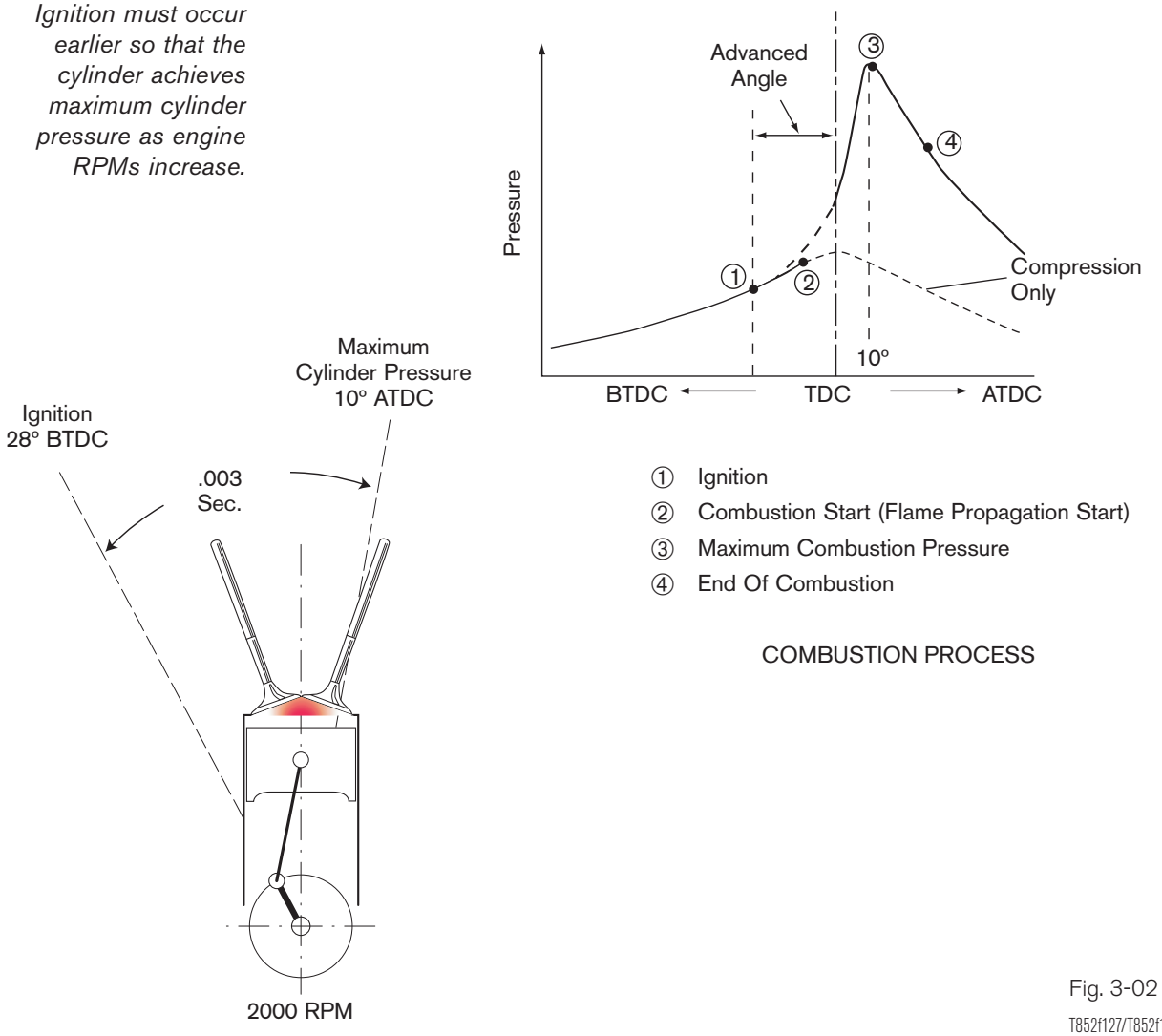

Fig. 3-02

T852f127/T852f128

Furthermore, ignition must also be advanced when the manifold pressure is low (i.e. when there is a strong vacuum). However, optimal ignition timing is also affected by a number of other factors besides engine speed and intake air volume, such as the shape of the combustion chamber, the temperature inside the combustion chamber, etc. For these reasons, electronic control provides the ideal ignition timing for the engine.

ESA Block Diagram

The distributor is not used on Distributorless and Direct Ignition Systems.

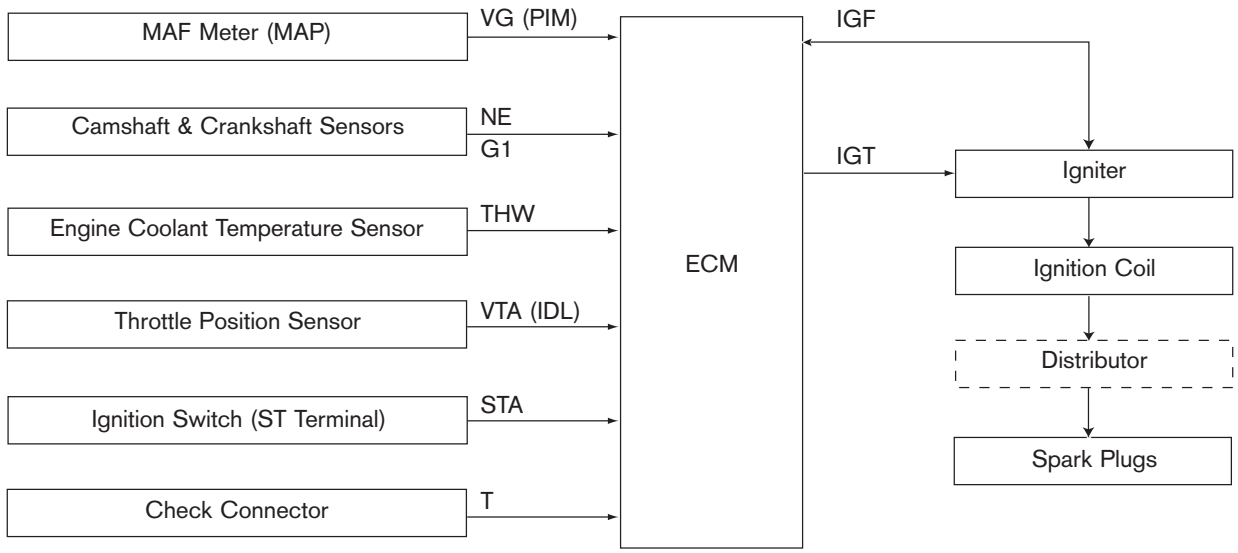

Fig. 3-03
T852f129

Electronic Spark Advance Overview

In the Electronic Spark Advance (ESA) system, the engine is provided with nearly ideal ignition timing characteristics. The ECM determines ignition timing based on sensor inputs and on its internal memory, which contains the optimal ignition timing data for each engine running condition. After determining the ignition timing, the ECM sends the ignition Timing signal (IGT) to the igniter. When the IGT signal goes off, the Igniter will shut off primary current flow in the ignition coil producing a high voltage spark (7kV - 35kV) in the cylinder.

Since the ESA always ensures optimal ignition timing, emissions are lowered and both fuel efficiency and engine power output are maintained at optimal levels.

Types of Ignition Systems

Ignition systems are divided into three basic categories:

- Distributor
- Distributorless Ignition System (DLI) Electronic Ignition
- Direct Ignition System (DIS)

Essential Ignition System Components

Regardless of type, the essential components are:

- Crankshaft sensor (Ne signal)
- Camshaft sensor (also called Variable Valve Timing sensor) (G signal)
- Igniter
- Ignition coil(s), harness, spark plugs
- ECM and inputs

Ignition Spark Generation

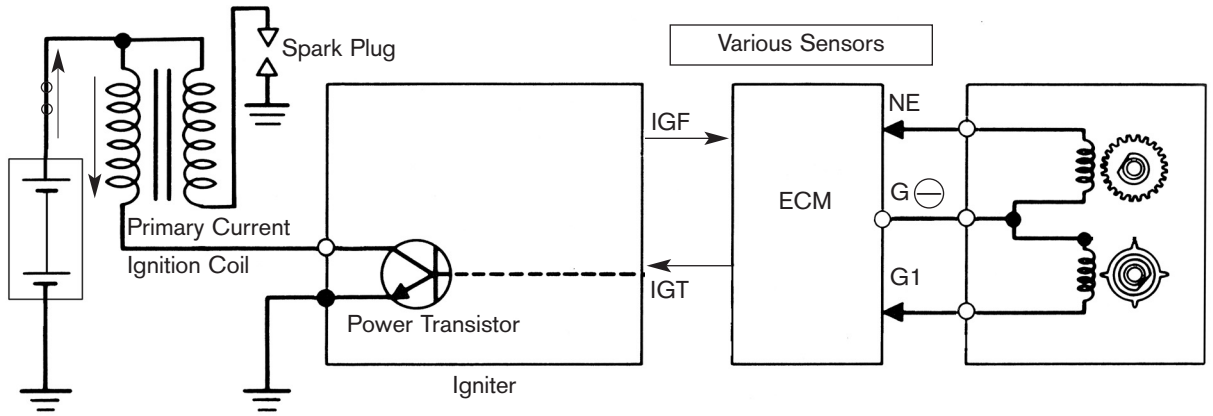

Fig. 3-04
T852f130

Ignition Spark Generation

The ignition coil must generate enough power to produce the spark needed to ignite the air/fuel mixture. To produce this power, a strong magnetic field is needed. This magnetic field is created by the current flowing in the primary coil. The primary coil has a very low resistance (approximately 1-4 ohms) allowing current flow. The more current, the stronger the magnetic field. The power transistor in the igniter handles the high current needed by the primary coil.

Another requirement to produce high voltages is that the current flow in the primary coil must be turned off quickly. When the transistor in the igniter turns off, current flow momentarily stops and the magnetic field collapses. As the rapidly collapsing magnetic field passes through the secondary winding, voltage (electrical pressure) is created. If sufficient voltage is created to overcome the resistance in the secondary circuit, there will be current flow and a spark generated.

NOTE The higher the resistance in the secondary circuit, the more voltage that will be needed to get the current to flow and the shorter spark duration. This is important when observing the ignition spark pattern.

IGT Signal

The IGT signal determines when ignition will occur.

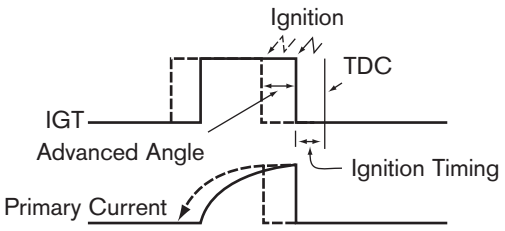

Fig. 3-05
T852f131

IGT Signal

The primary coil current flow is controlled by the ECM through the Ignition Timing (IGT) signal. The IGT signal is a voltage signal that turns on/off the main transistor in the igniter. When IGT signal voltage drops to 0 volts, the transistor in the igniter turns off. When the current in the primary coil is turned off, the rapidly collapsing magnetic field induces a high voltage in the secondary coil. If the voltage is high enough to overcome the resistance in the secondary circuit, there will be a spark at the spark plug.

IGC

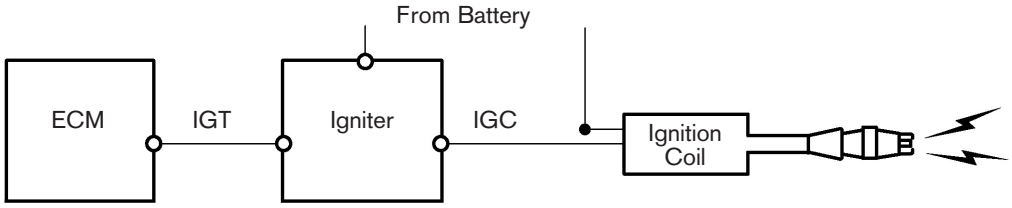

Fig. 3-06
T852f132

IGC

On some ignition systems, the circuit that carries the primary coil current is called IGC. IGC is turned on and off by the igniter based on the IGT signal.

Igniter

The primary function of the igniter is to turn on and off the primary coil current based on the IGT signal received from the ECM. The igniter or ECM may perform the following functions:

- Ignition Confirmation (IGF) signal generation unit
- Dwell angle control
- Lock prevention circuit
- Over voltage prevention circuit
- Current limiting control
- Tachometer signal

It is critical that the proper igniter is used when replacing an igniter. The igniters are matched to the type of ignition coil and ECM.

IGF Signal

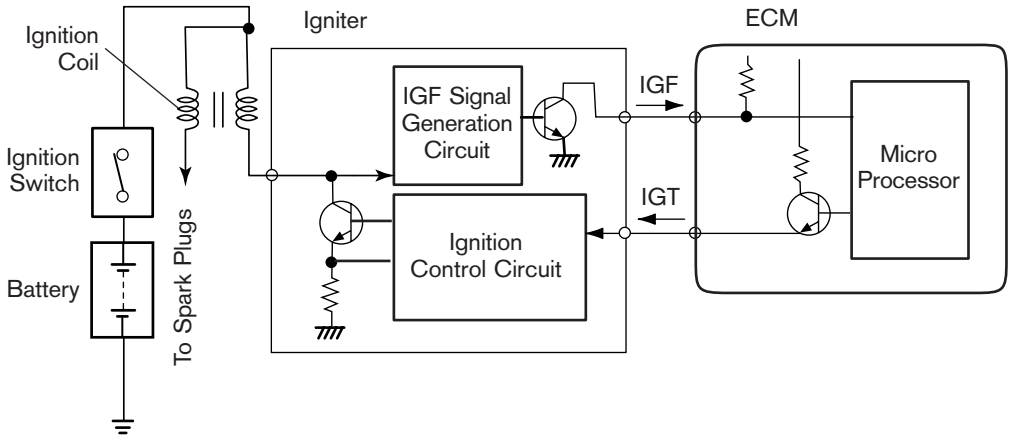

Fig. 3-07
T852f133

IGF Signal

The IGF signal is used by the ECM to determine if the ignition system is working. Based on IGF, the ECM will keep power supplied to the fuel pump and injectors on most ignition systems. **Without IGF, the vehicle will start momentarily, then stall. However, with some Direct Ignition Systems with the igniter in the coil, the engine will run.**

IGF Signal Detection Using CEMF

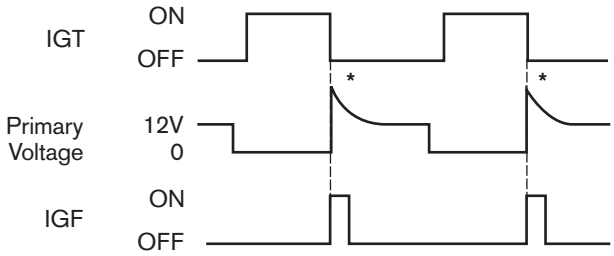

*The Counter Electromotive Force

Fig. 3-08
T852f134

IGF Signal Detection using CEMF There are two basic methods of detecting IGF. Early systems used the Counter Electromotive Force (CEMF) created in the primary coil and circuit for generating the IGF signal. The collapsing magnetic field produces a CEMF in the primary coil. When CEMF is detected by the igniter, the igniter sends a signal to the ECM. This method is no longer used.

IGF Detection through Primary Current

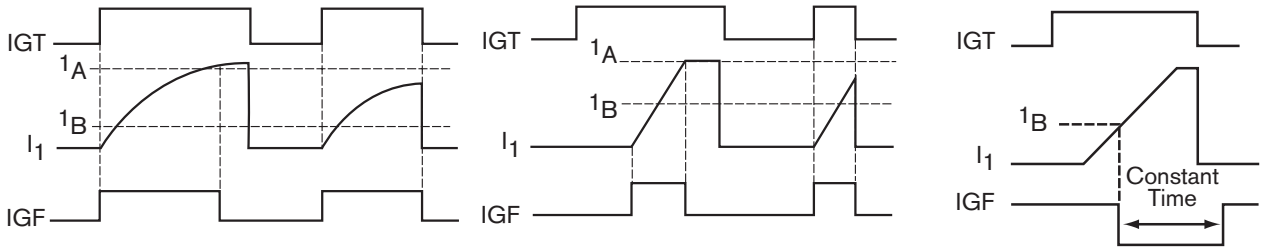

I_1 Primary current
I_A Maximum current level for successful spark generation
I_B Minimum current level for successful spark generation

Fig. 3-09
T852f135/T852f136
T852f137

IGF Detection Using Primary Current Method The primary current level method measures the current level in the primary circuit. The minimum and maximum current levels are used to turn the IGF signal on and off. The levels will vary with different ignition systems. Regardless of method, the Repair Manual shows the scope pattern

or provides you with the necessary voltage reading to confirm that the igniter is producing the IGF signal.

Lack of an IGF on many ignition systems will produce a DTC. On some ignition systems, the ECM is able to identify which coil did not produce an IGF signal and this can be accomplished by two methods.

The first method uses an IGF line for each coil.

With the second method, the IGF signal is carried back to the ECM on a common line with the other coil(s). The ECM is able to distinguish which coil is not operating based on when the IGF signal is received. Since the ECM knows when each cylinder needs to be ignited, it knows from which coil to expect the IGF signal.

IGF Circuit (8 Cylinder Engine)

Note that there are only two IGF lines for eight cylinders. Because the ECM knows when the coil is triggered, it knows when to expect the IGF signal. This capability allows the ECM to correctly identify the cylinder and set the appropriate DTC.

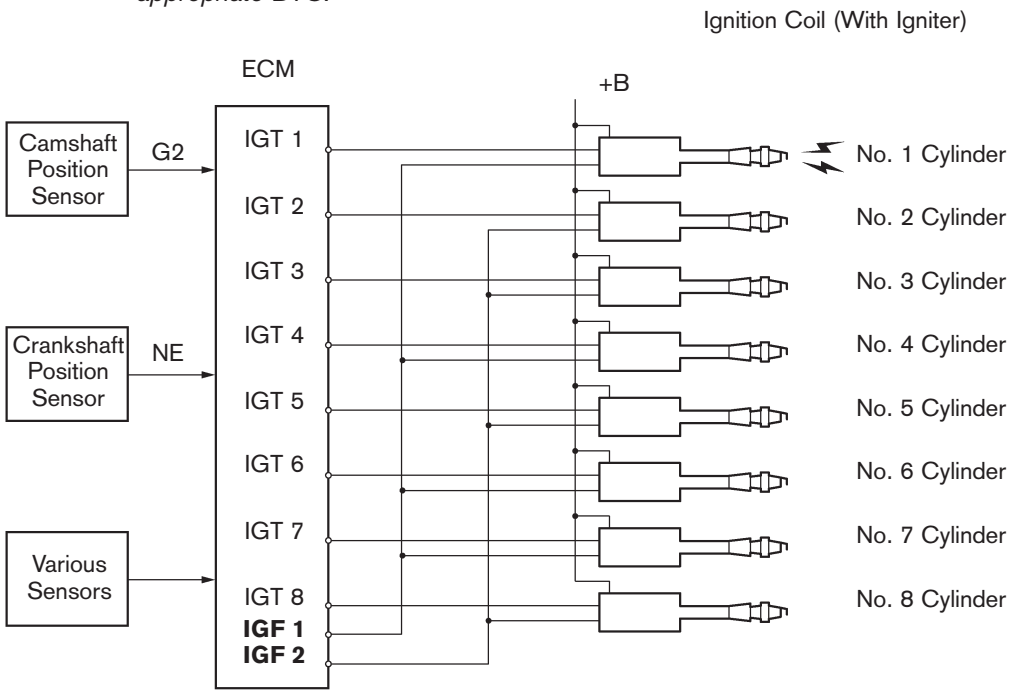

Fig. 3-10

T852f138

Dwell Angle Control

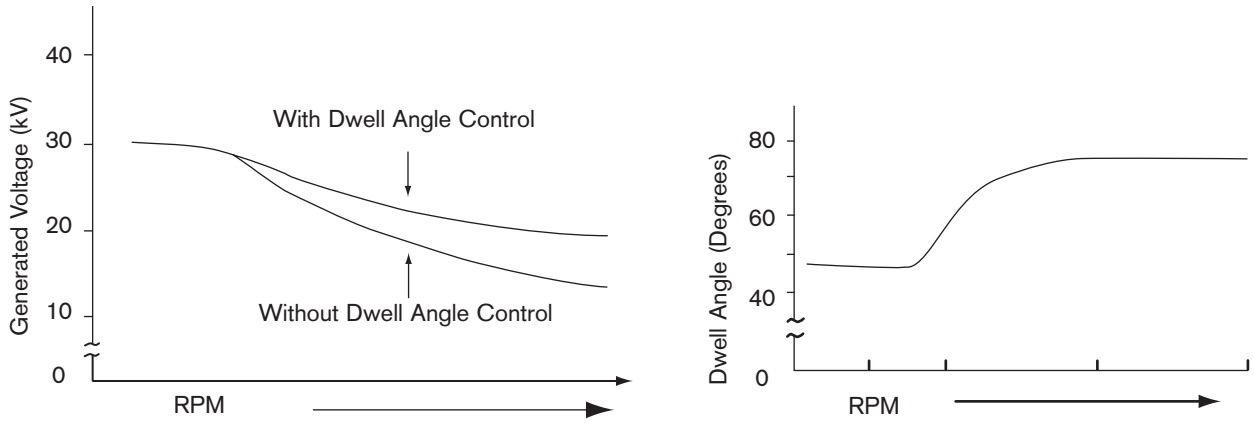

Fig. 3-11

T852f139/T852f140

Dwell Angle Control This circuit controls the length of time the power transistor (current flow through the primary circuit) is turned on.

The length of time during which current flows through the primary coil generally decreases as the engine speed rises, so the induced voltage in the secondary coil decreases.

Dwell angle control refers to electronic control of the length of time during which primary current flows through the ignition coil (that is, the dwell angle) in accordance with distributor shaft rotational speed.

At low speeds, the dwell angle is reduced to prevent excessive primary current flow, and increased as the rotational speed increases to prevent the primary current from decreasing.

Lock Prevention Circuit This circuit forces the power transistor to turn off if it locks up (if current flows continuously for a period longer than specified), to protect the ignition coil and the power transistor.

Over Voltage Prevention Circuit This circuit shuts off the power transistor(s) if the power supply voltage becomes too high, to protect the ignition coil and the power transistor.

Current Limiting (Over Current Prevention)

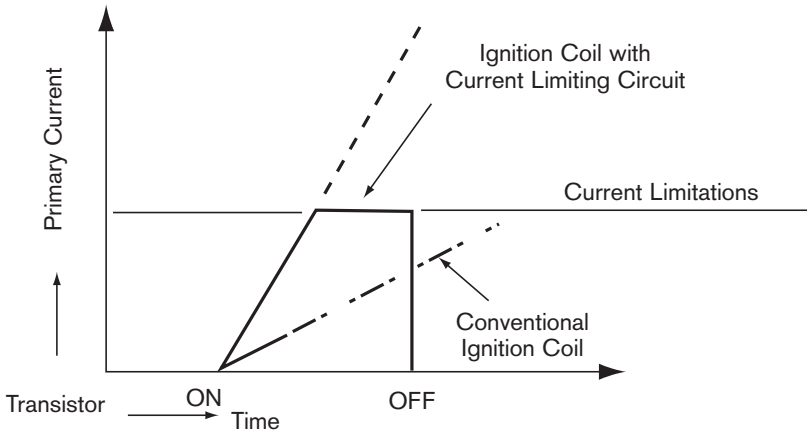

CURRENT LIMITING CONTROL

Fig. 3-12
T852f141

Current Limiting (Over Current Prevention)

Current limiting control is a system that improves the rise of the flow of current in the primary coil, ensuring that a constant primary current is flowing at all times, from the low speed to the high speed range, and thus making it possible to obtain a high secondary voltage.

The coil's primary resistance is reduced improving the current rise performance, and this will increase the current flow. But without the current limiting circuit, the coil or the power transistor will burn out. For this reason, after the primary current has reached a fixed value, it is controlled electronically by the igniter so that a larger current will not flow.

Since the current-limiting control limits the maximum primary current, no external resistor is needed for the ignition coil.

NOTE

Since igniters are manufactured to match ignition coil characteristics, the function and construction of each type are different. For this reason, if any igniter and coil other than those specified are combined, the igniter or coil may be damaged. Therefore, always use the correct parts specified for the vehicle.

Tachometer Signal

On some systems the Tach signal is generated in the igniter.

NE Signal and G Signal

Though there are different types of ignition systems, the use of the NE and G signals is consistent. The NE signal indicates crankshaft position and engine RPM.

The G signal (also called VVT signal) provides cylinder identification. By comparing the G signal to the NE signal, the ECM is able to identify the cylinder on compression. This is necessary to calculate crankshaft angle (initial ignition timing angle), identify which coil to trigger on Direct Ignition System (independent ignition), and which injector to energize on sequential fuel injection systems.

As ignition systems and engines evolved, there have been modifications to the NE and G signal. Timing rotors have different numbers of teeth. For some G signal sensors, a notch is used instead of a tooth to generate a signal. Regardless, you can determine what style is used by visually examining the timing rotor or consulting the Repair Manual. Many of the different styles are represented with their respective ignition system.

Ignition Advance Angle

As engine RPM increases, ignition must begin earlier.

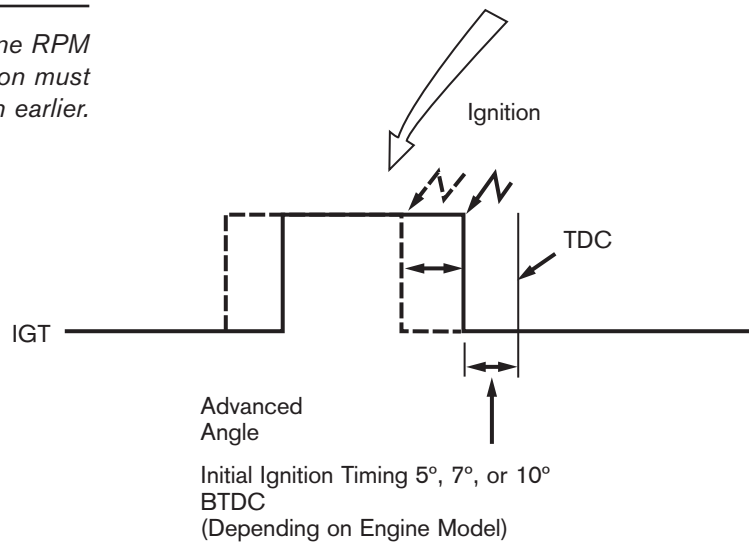

Fig. 3-13

T852f142

Electronic Spark Advance Operation

For maximum engine output efficiency, the air/fuel mixture must be ignited so that maximum combustion pressure occurs approximately 10°-15° after TDC. As engine RPM increases, there is less time for the mixture to complete its combustion at the proper time because the piston is traveling faster. The ECM controls when the spark occurs through the IGT signal. By varying the time the IGT signal is turned off, the ECM changes ignition spark timing.

Ignition Advance Modes and Corrections

The ECM calculates the IGT signal on time based on engine operating modes and conditions. The IGT signal is based primarily on the crankshaft position sensor signal, engine load, temperature, knock sensor, etc.

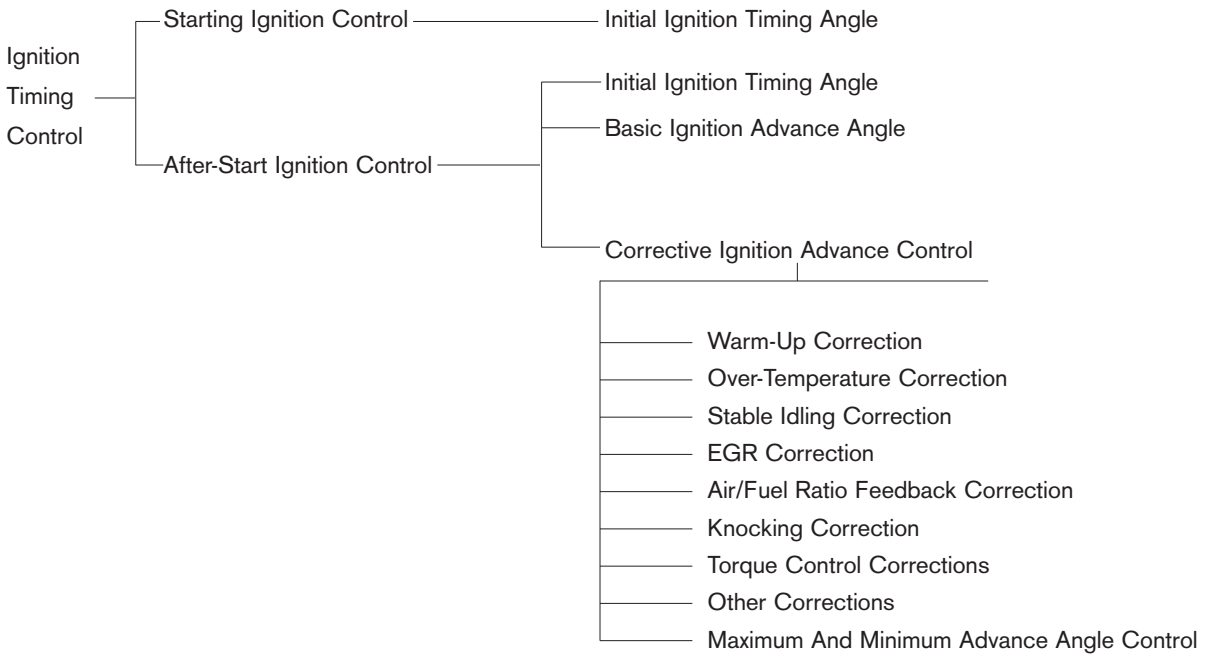

Fig. 3-14

Starting Ignition Control

Ignition timing control consists of two basic elements:

- Ignition control during starting.
- After-start ignition control.

Ignition Control During Starting

Ignition control during starting is defined as the period when the engine is cranking and immediately following cranking. The ignition occurs at a fixed crankshaft angle, approximately 5º-10º BTDC, regardless of engine operating conditions and this is called the initial timing angle.

Since engine speed is still below a specified RPM and unstable during and immediately after starting, the ignition timing is fixed until engine operation is stabilized.

The ECM recognizes the engine is being cranked when it receives the NE and G signal. On some models, the starter (STA) signal is also used to inform the engine is being cranked.

Initial Ignition Timing Angle

This angle is calculated from the first NE signal that follows a G signal. The ignition occurs at a fixed crankshaft angle, approximately 5°-10° BTDC, regardless of engine operating conditions, and this is called the initial timing angle.

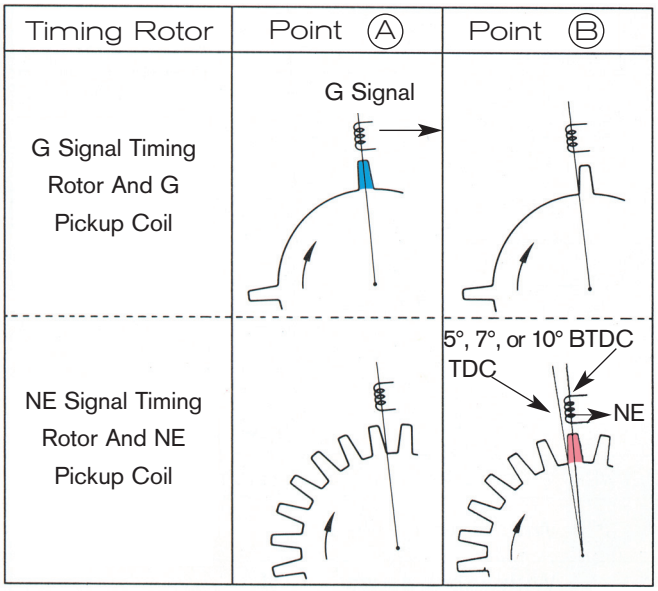

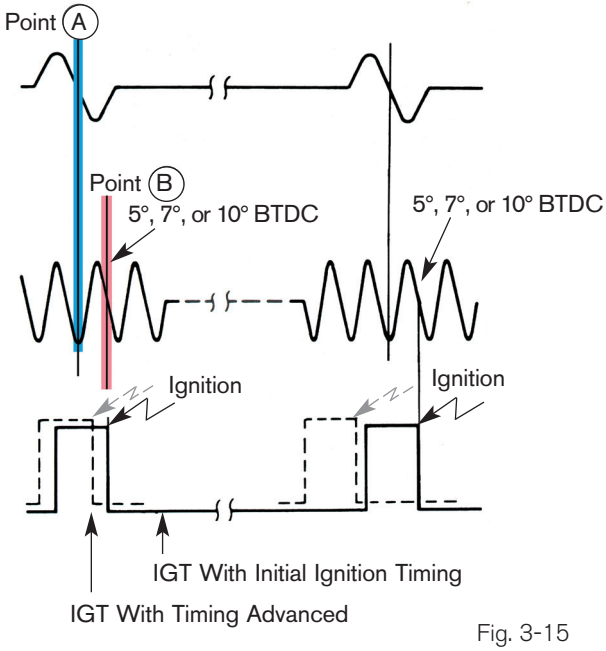

Fig. 3-15
T852f143/T852f144

Initial Ignition Timing Angle Symbol

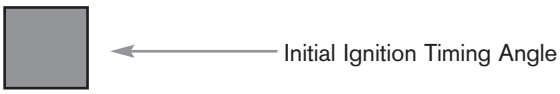

Fig. 3-16
T852f145

After-Start Ignition Control

After-start ignition control will calculate and adjust ignition timing based on engine operating conditions. The calculation and adjustment of ignition timing is performed in a series of steps, beginning with basic ignition advance control.

Various corrections are added to the initial ignition timing angle and the basic ignition advance angle during normal operation.

After-start ignition control is carried out during normal operation.

The various corrections (that are based on signals from the relevant sensors) are added to the initial ignition timing angle and to the basic ignition advance angle (determined by the intake air volume signal or intake manifold pressure signal) and by the engine speed signal:

Ignition timing = initial ignition timing angle

+ basic ignition advance angle

+ corrective ignition advance angle

During normal operation of after-start ignition control, the Ignition Timing (IGT) signal calculated by the microprocessor in the ECM and is output through the back-up IC.

Ignition Advance Angles

When spark ignition occurs is a result of a calculation based on initial timing angle plus the basic ignition angle plus additional corrections.

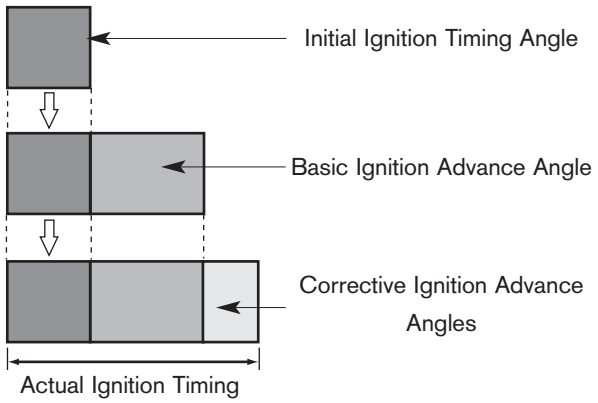

Fig. 3-17

T852f146

Basic Ignition Advance Control

The ECM selects the basic ignition advance angle from memory based on engine speed, load, throttle valve position, and engine coolant temperature.

Relevant Signals:

- Intake air volume (VS, KS, or VG) (Intake manifold pressure (PIM))
- Engine speed (NE)
- Throttle position (IDL)
- Engine Coolant Temperature (THW)

Corrective Ignition Advance Control

The Corrective Ignition Advance Control makes the final adjustment to the actual ignition timing. The following corrective factors are not found on all vehicles.

Warm Up Correction

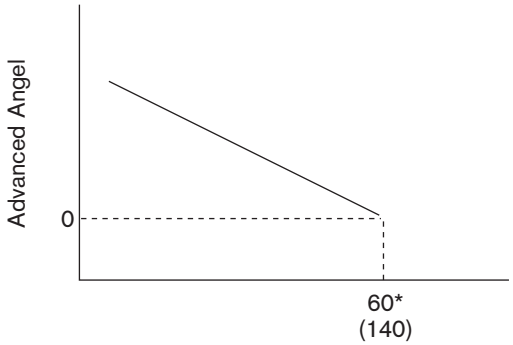

*Depending on the Engine Model.

Fig. 3-18
T852f147

Warm-Up Correction

The ignition timing is advanced to improve driveability when the coolant temperature is low. In some engine models, this correction changes the advance angle in accordance with the intake air volume (intake manifold pressure) and can advance approximately 15° (varies with engine model) by this correction during extremely cold weather.

Over Temperature

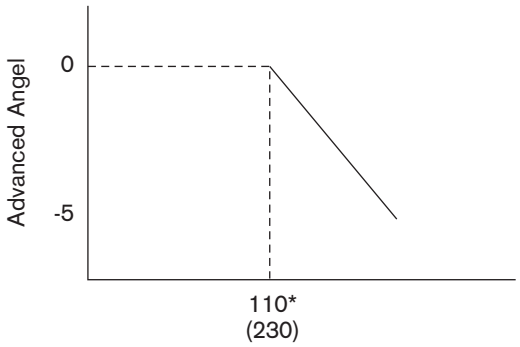

*Depending on the Engine Model.

Fig. 3-19
T852f148

Over Temperature Correction

To prevent knocking and overheating, the ignition timing is retarded when the coolant temperature is extremely high. The timing may be retarded approximately 5° by this correction.

Relevant Signals:

- Engine Coolant Temperature (ECT) - THW

The following may also be used on some engine models:

- MAF (VS, KS, or VG)
- Engine Speed - NE signal
- Throttle position VTA or (IDL)

Stable Idling Correction

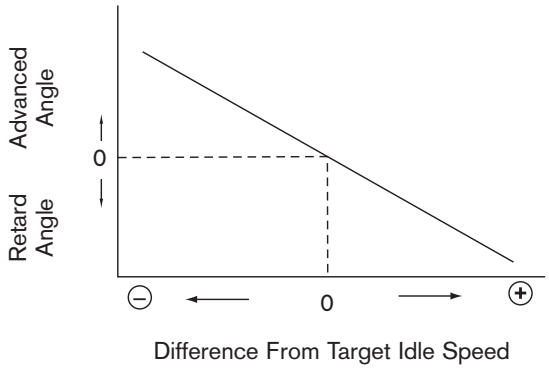

Fig. 3-20
T852f149

Stable Idling Correction

When the engine speed during idling has fluctuated from the target idle speed, the ECM adjusts the ignition timing to stabilize the engine speed. The ECM is constantly calculating the average engine speed. If the engine speed falls below the target speed, the ECM advances the ignition timing by a predetermined angle. If the engine speed rises above the target speed, the ECM retards the ignition timing by a predetermined angle.

This correction is not executed when the engine exceeds a predetermined speed.

In some engine models, the advance angle changes depending on whether the air conditioner is on or off. In other engine models, this correction only operates when the engine speed is below the target engine speed.

Relevant Signals:

- Engine Speed (NE)
- TPS (VTA or IDL)
- Vehicle Speed (SPD)

EGR Correction

When EGR is operating, the ignition timing is advanced according to intake air volume and engine RPM to improve driveability. EGR has the effect of reducing engine knocking, therefore the timing can be advanced.

Relevant Signals:

- Engine Speed (NE)
- TPS (VTA or IDL or PSW)
- Intake air volume (VS, KS, or VG) (Intake manifold pressure (PIM))

Torque Control Correction

This correction reduces shift shock and the result is that the driver feels smoother shifts. With an electronically-controlled transaxle, each clutch and brake in the planetary gear unit of the transmission or transaxle generates shock to some extent during shifting. In some models, this shock is minimized by delaying the ignition timing when gears are upshifted. When gear shifting starts, the ECM retards the engine ignition timing to reduce the engine torque. As a result, the shock of engagement and strain on the clutches and brakes of the planetary gear unit is reduced and the gear shift change is performed smoothly. The ignition timing angle is retarded a maximum of approximately 20° by this correction. This correction is not performed when the coolant temperature or battery voltage is below a predetermined level.

Relevant Signals:

- Engine Speed (NE)
- TPS (VTA or IDL or PSW)
- ECT (THW)
- Battery voltage (+B)

Knock

When the spark plug ignites the air/fuel mixture, cylinder pressure increases. If the increase in heat and pressure is high enough, the air/fuel mixture will ignite at a location other than the spark plug. This is referred to as spontaneous combustion and produces engine knock.

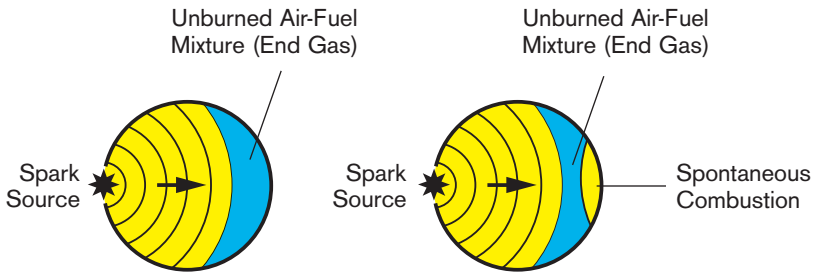

Fig. 3-21

T852f150

Knock Correction

Engine knock, if severe enough, can cause engine damage. Combustion chamber design, gasoline octane, air/fuel ratio, and ignition timing all affect when knock will occur. Under most engine conditions, ignition timing needs to be near the point when knock occurs to achieve the best fuel economy, engine power output, and lowest exhaust emissions. However, the point when knock occurs will vary from a variety of factors. For example, if the gasoline octane is too low, and ignition takes place at the optimum point, knock will occur. To prevent this, a knock correction function is used.

Engine Knock Control Loop

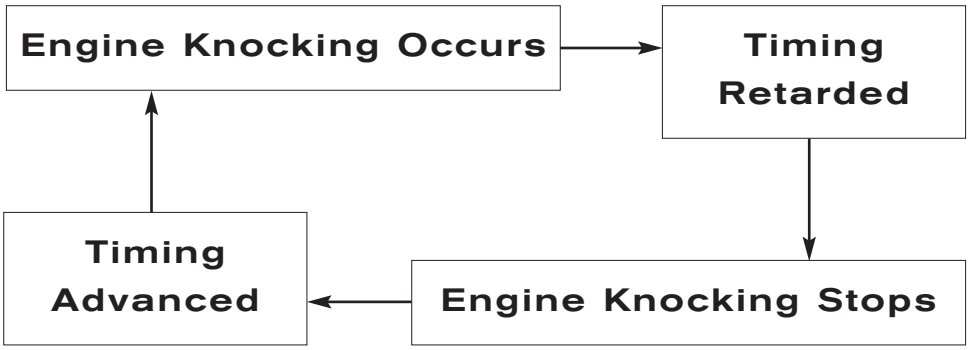

Fig. 3-22

Engine Knock Control

The ECM retards the timing in fixed steps until the knock disappears. When the knocking stops, the ECM stops retarding the ignition timing and begins to advance the timing in fixed steps.

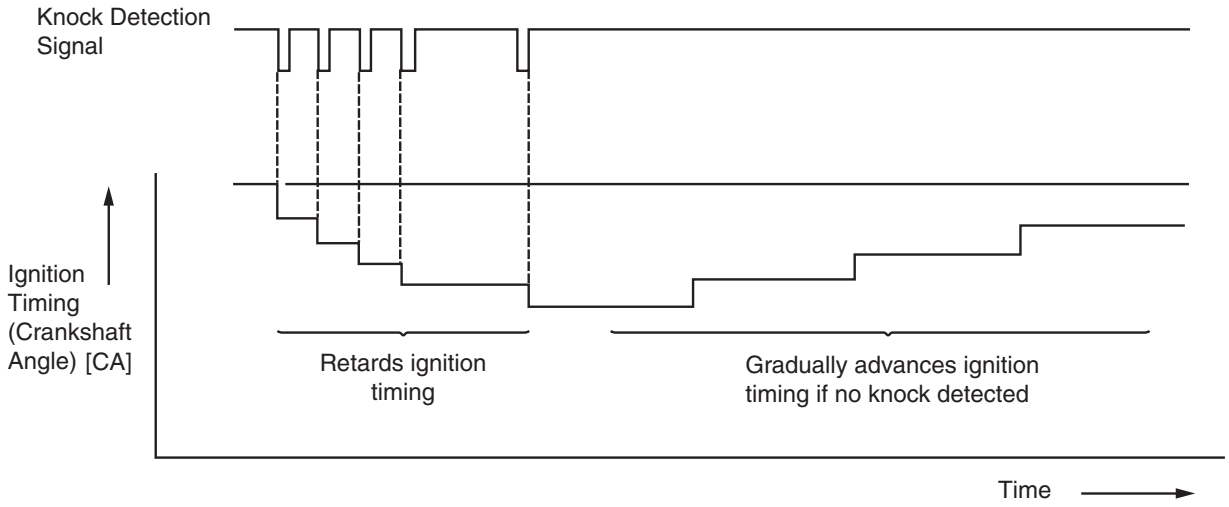

Fig. 3-23
T852f151

When engine knocking occurs, the knock sensor converts the vibration from the knocking into a voltage signal that is detected by the ECM. According to its programming, the ECM retards the timing in fixed steps until the knock disappears. When the knocking stops, the ECM stops retarding the ignition timing and begins to advance the timing in fixed steps. If the ignition timing continues to advance and knocking occurs, ignition timing is again retarded.

Knock Signal Identification

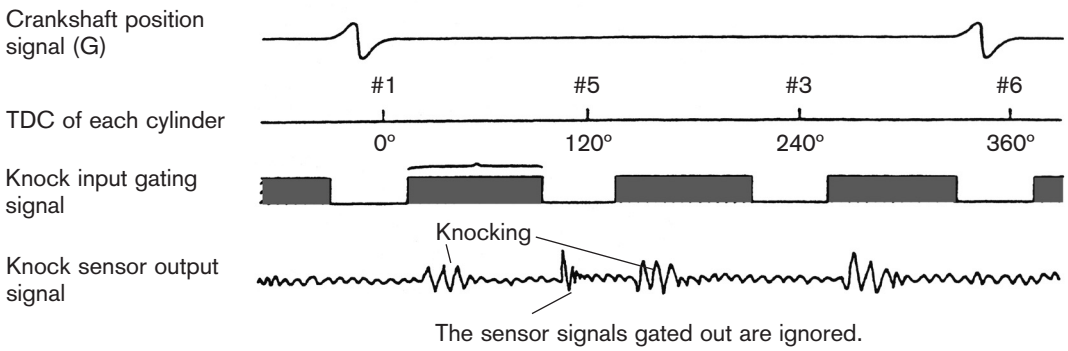

Fig. 3-24
T852f152

The ECM is able to determine which cylinder is knocking by when the knock signal is received. The ECM knows the cylinder that is in the power stroke mode based on the NE and G signals. This allows the ECM to filter any false signals.

Some mechanical problems can duplicate engine knocking. An excessively worn connecting rod bearing or a large cylinder ridge will produce a vibration at the same frequency as engine knocking. The ECM in turn will retard the timing.

Air/Fuel Ratio Correction

The engine is especially sensitive to changes in the air - fuel ratio when it is idling, so stable idling is ensured by advancing the ignition timing at this time in order to match the fuel injection volume of air - fuel ratio feedback correction.

This correction is not executed while the vehicle is being driven.

Relevant Signals:

- Oxygen or A/F sensor
- TPS (VTA or IDL)
- Vehicle Speed (SPD)

Other Corrections

Engines have been developed with the following corrections added to the ESA system (in addition to the various corrections explained so far), in order to adjust the ignition timing with extremely fine precision.

Transition Correction - During the transition (change) from deceleration to acceleration, the ignition timing is either advanced or retarded temporarily in accordance with the acceleration.

Cruise Control Correction - When driving downhill under cruise control, in order to provide smooth cruise control operation and minimize changes in engine torque caused by fuel cut-off because of engine braking, a signal is sent from the Cruise Control ECU to the ECM to retard the ignition timing.

Traction Control Correction - This retards the ignition timing, thus lowering the torque output by the engine, when the coolant temperature is above a predetermined temperature and the traction control system is operating.

Acoustic Control Induction System (ACIS) Correction - When the engine speed rises above a predetermined level, the ACIS operates. At that time, the ECM advances the ignition timing simultaneously, thus improving output.

Maximum and Minimum Ignition Advance Control

If the actual ignition timing (basic ignition advance angle + corrective ignition advance or retard angle) becomes abnormal, the engine will be adversely affected. To prevent this, the ECM controls the actual advance so that the sum of the basic ignition and corrective angle cannot be greater or less than preprogrammed minimum or maximum values.

Approximately, these values are:

- MAX. ADVANCE ANGLE: 35°-45°
- MIN. ADVANCE ANGLE: 10°-0°

Advance angle = Basic ignition advance angle + Corrective ignition advance angle

Distributor System

There are many variations of distributor ignition systems

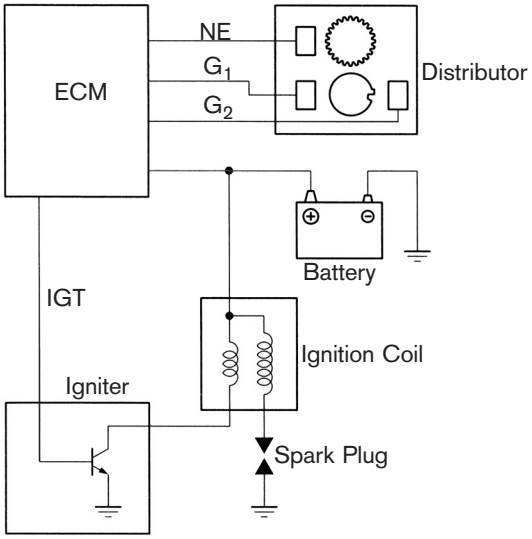

Fig. 3-25
T852f153

Distributor Ignition (DI) Systems

The NE signal is generated by the Crankshaft Position Sensor (also called engine speed sensor). The G signal is generated by the Camshaft Position sensor that may be located in the distributor or on the engine.

Distributor

This distributor has two G signal pick up coils and an NE signal rotor.

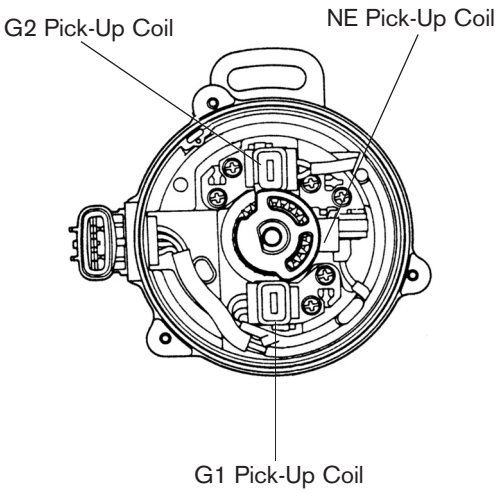

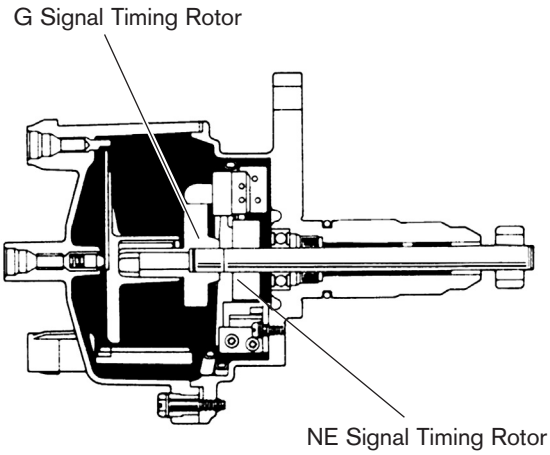

Fig. 3-26
T852f154/T852f155

Distributor System Circuit

The IGT signal turns the igniter on and off at the correct time for ignition to occur.

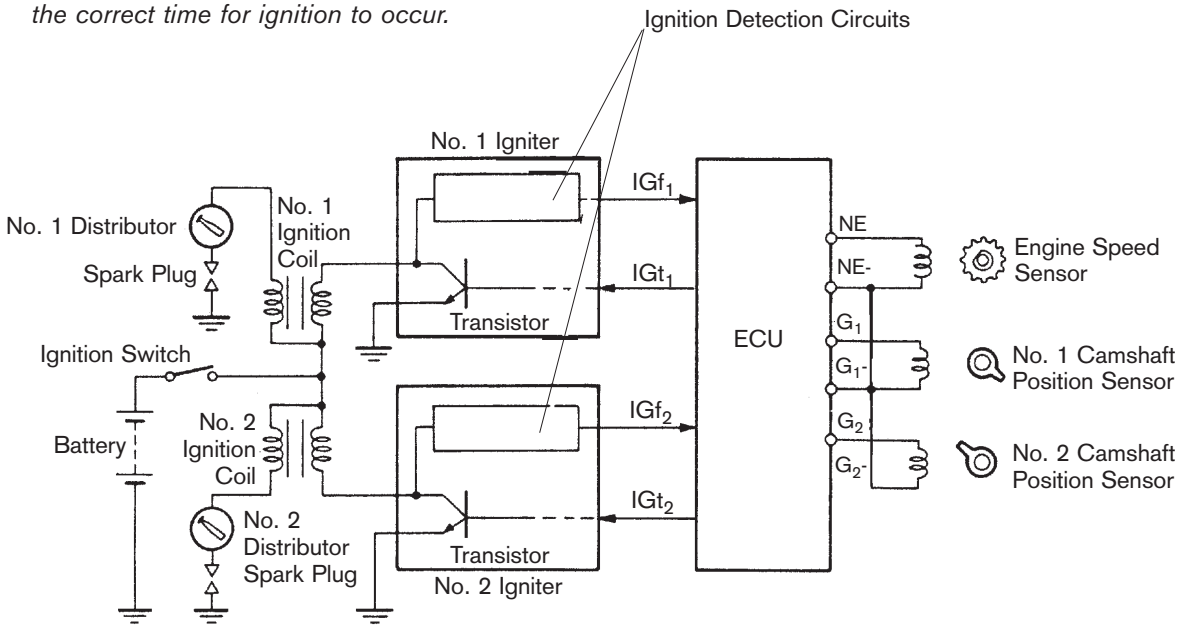

NOTE: Two igniters are used in the engine, one each for four cylinders. No. 1 igniter ignites cylinders 1, 4, 6 and 7 and No. 2 igniter ignites cylinders 2, 3, 5, 8.

Fig. 3-27

L852f801

Distributor System Components

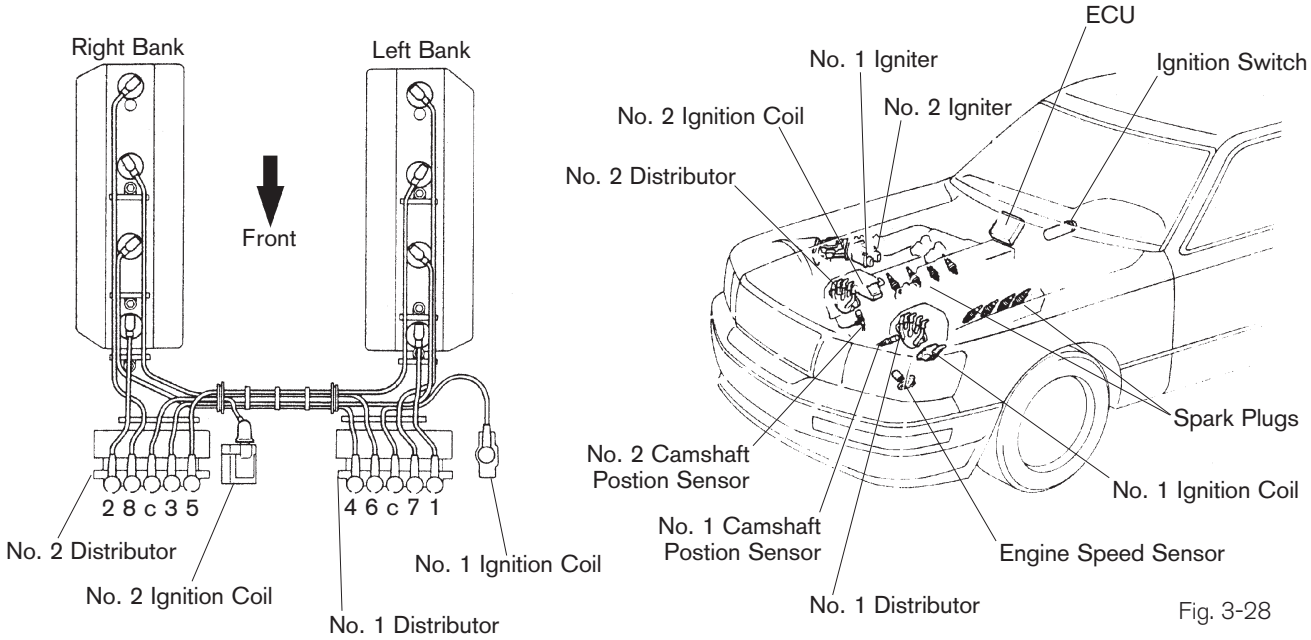

Fig. 3-28

L852f802/L852f803

At the appropriate time during cylinder compression, the ECM sends a signal called IGT to the igniter. This will turn on the transistor in the igniter sending current through the primary winding of the ignition coil. At the optimum time for ignition to occur, the ECM will turn off IGT and the transistor will turn off current flow through the primary winding. The induced current will travel through the coil wire, to the distributor cap, rotor, to the distributor terminal the rotor is pointing at, high tension wire, spark plug, and ground. The rotor position determines the cylinder that receives the spark.

Firing Order

The firing order can be found in the New Car Features book. The cylinders are identified as follows:

- V-8 engine cylinders are numbered with odd numbered cylinders on the left bank and even numbered cylinders on the right bank.
- V-6 engine cylinders are numbered with even numbered cylinders on left bank and odd numbered cylinders on the right bank.
- In-line 6 engines are numbered consecutively 1-6, with the number 1 cylinder at the front.

Many times, original equipment distributor caps have the firing order molded into the cap.

Firing Order

Engine Configuration	Firing Order
V-8	1-8-4-3-6-5-7-2
V-6	1-2-3-4-5-6
In-line 6	1-5-3-6-2-4

Fig. 3-29

V-6 Cylinder Identification

Note that the cylinder numbering is opposite the V-8.

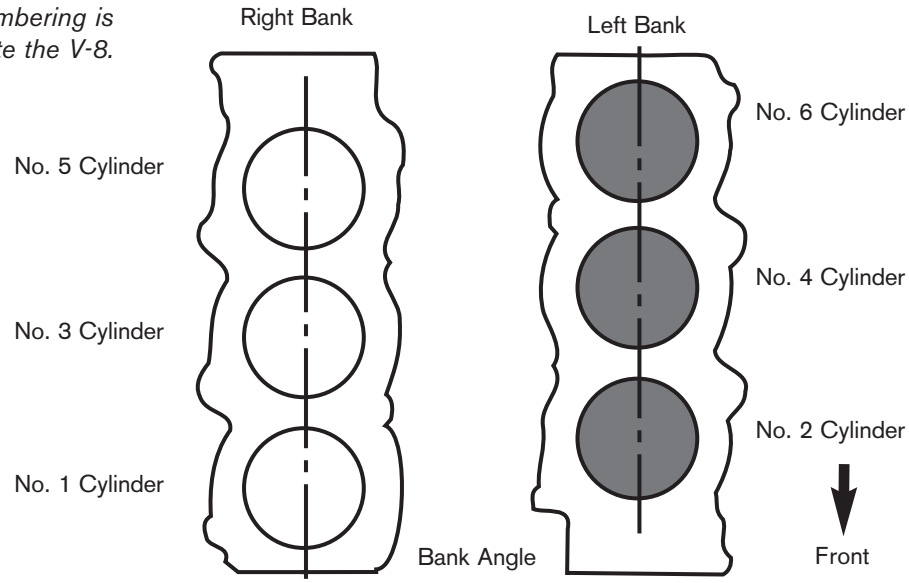

Fig. 3-30

T852f157

V-8 Cylinder Identification

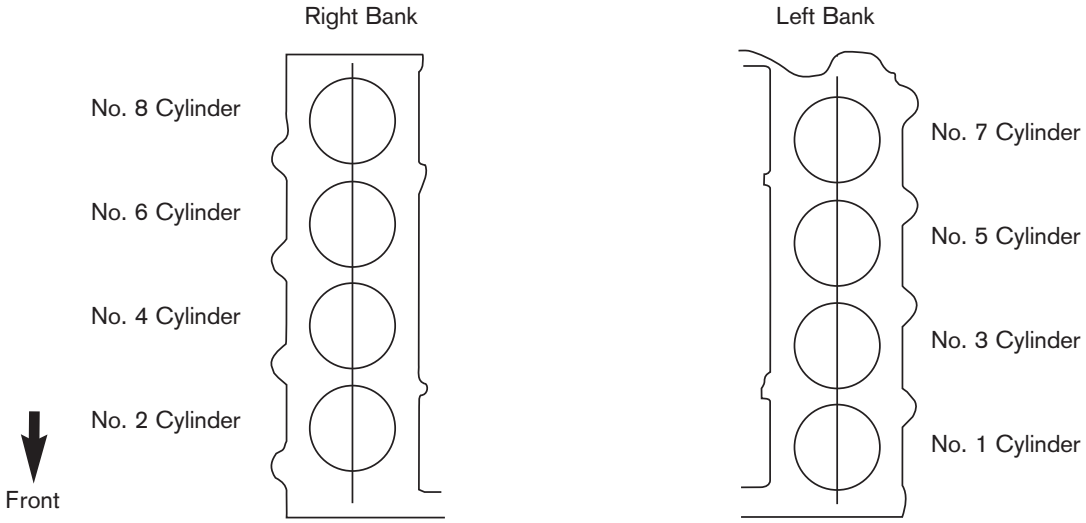

Fig. 31

T852f158

Distributorless & Direct Ignition Systems Overview

Essentially, a Distributorless Ignition System is an ignition system without a distributor. Eliminating the distributor improved reliability by reducing the number of mechanical components. Other advantages are:

- Greater control over ignition spark generation - There is more time for the coil to build a sufficient magnetic field necessary to produce a spark that will ignite the air/fuel mixture. This reduces the number of cylinder misfires.

- Electrical interference from the distributor is eliminated - Ignition coils can be placed on or near the spark plugs. This helps eliminate electrical interference and improve reliability.

- Ignition timing can be controlled over a wider range - In a distributor, if too much advance is applied the secondary voltage would be directed to the wrong cylinder.

All of the above reduce the chances of cylinder misfires and consequently, exhaust emissions.

Distributorless Ignition System

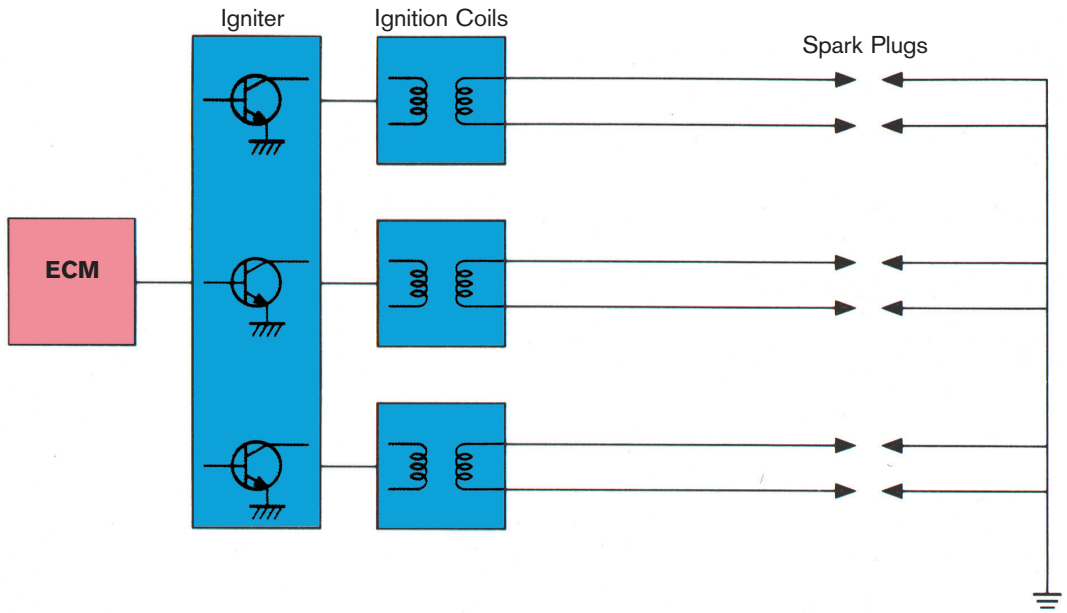

Fig. 3-32
T852f159

Distributorless Ignition systems are usually defined as having one ignition coil with two spark plug wires for two cylinders. Distributorless Ignition Systems use a method called simultaneous ignition (also called waste spark) where an ignition spark is generated from one ignition coil for two cylinders simultaneously.

Direct Ignition System Independent Ignition

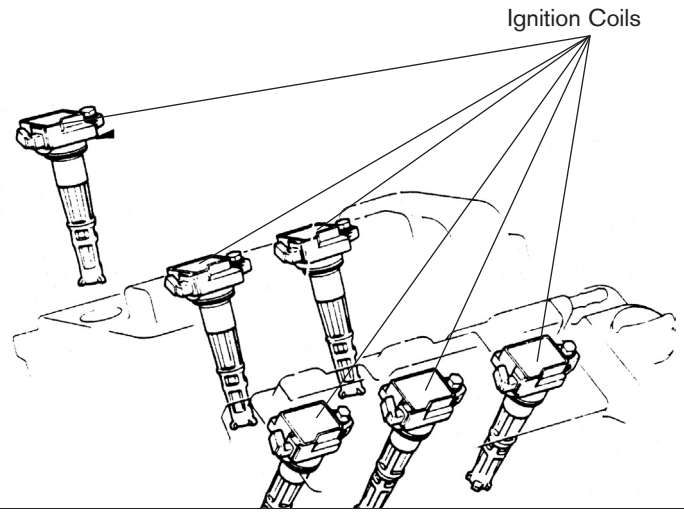

Fig. 3-33
T852f160

Direct Ignition System Circuit

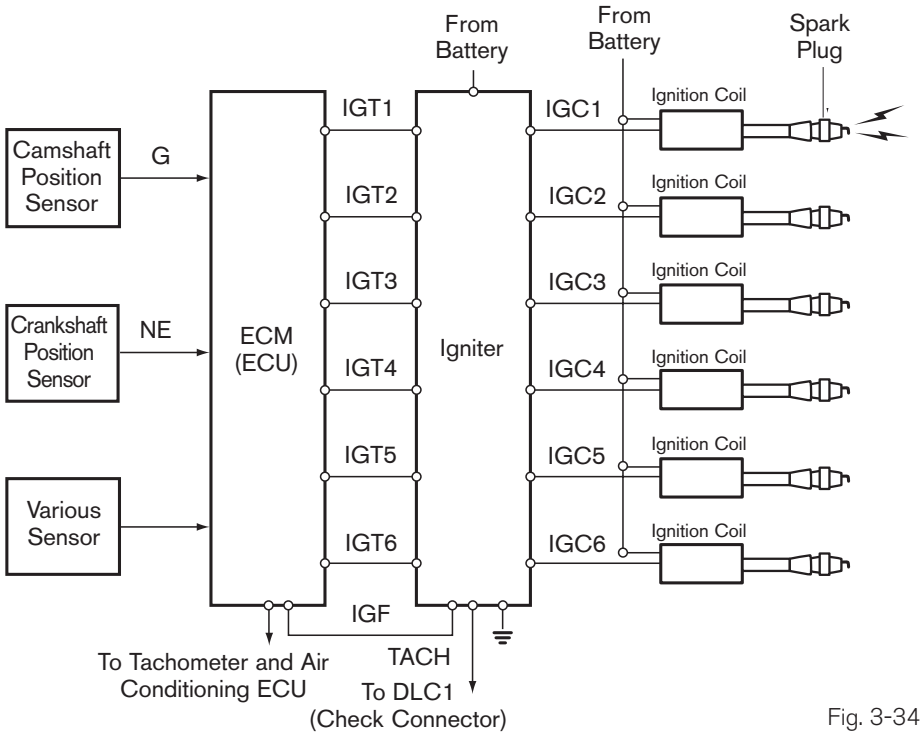

Fig. 3-34
T852f161

Direct Ignition Systems (DIS) have the ignition coil mounted on the spark plug. DIS can come in two forms:

- **Independent ignition** - one coil per cylinder.
- **Simultaneous ignition** - one coil for two cylinders. In this system an ignition coil is mounted directly to one spark plug and a high tension cord is connected to the other spark plug. A spark is generated in both cylinders simultaneously.

Direct Ignition System (DIS) Simultaneous Ignition

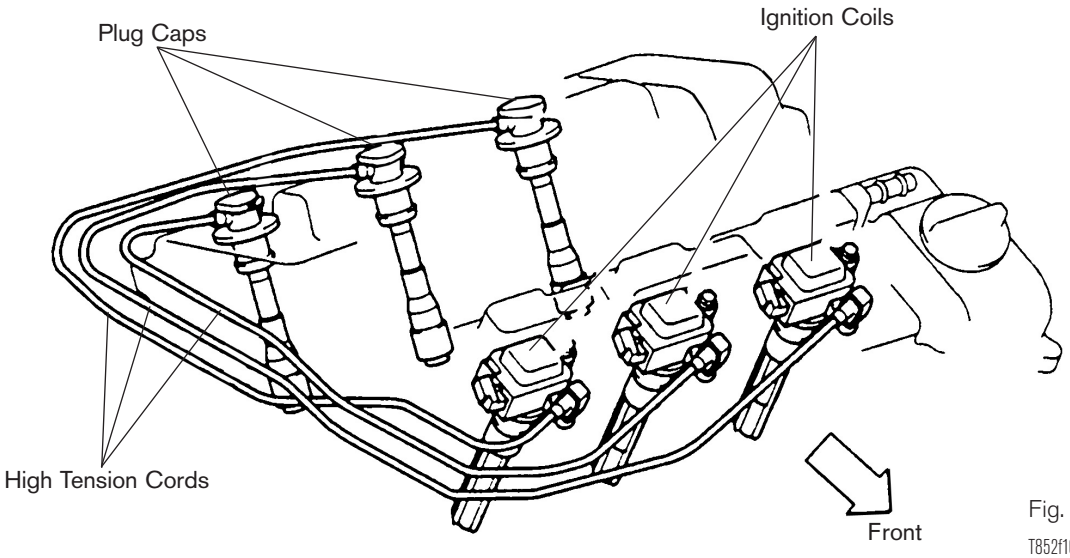

Fig. 3-35
T852f162

Distributorless Ignition System Circuit

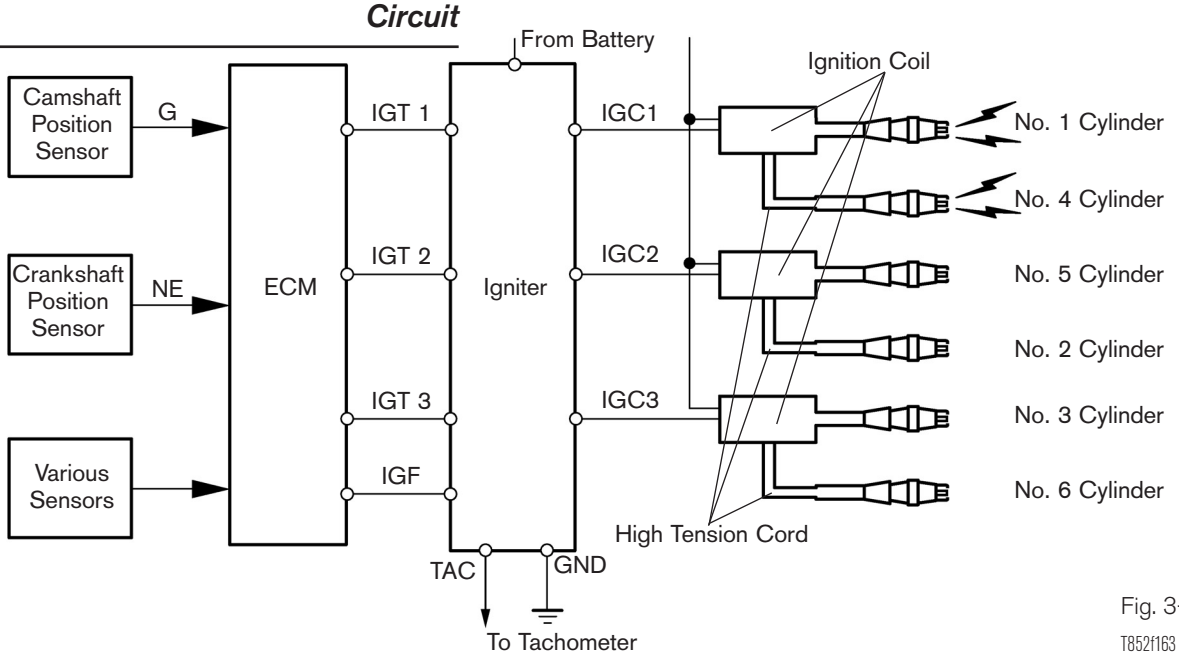

Fig. 3-36
T852f163

Distributorless (Simultaneous Ignition) Operation

Distributorless Ignition Systems and Direct Ignition Systems that use one coil for two cylinders use a method known as simultaneous ignition. With simultaneous ignition systems, two cylinders are paired according to piston position. This has the effect simplifying ignition timing and reducing the secondary voltage requirement.

For example, on a V-6 engine, on cylinders one and four, the pistons occupy the same cylinder position (both are at TDC and BDC at the same time), and move in unison, but they are on different strokes. When cylinder one is on the compression stroke, cylinder four is on the exhaust stroke, and vice versa on the next revolution.

Simultaneous Ignition Sequence

Two cylinders simultaneously will have spark, though only one cylinder will be on the compression stroke. Note that cylinders 2 and 5 both have spark, but cylinder No. 5 is compression. One crankshaft revolution later cylinder No. 3 is on compression.

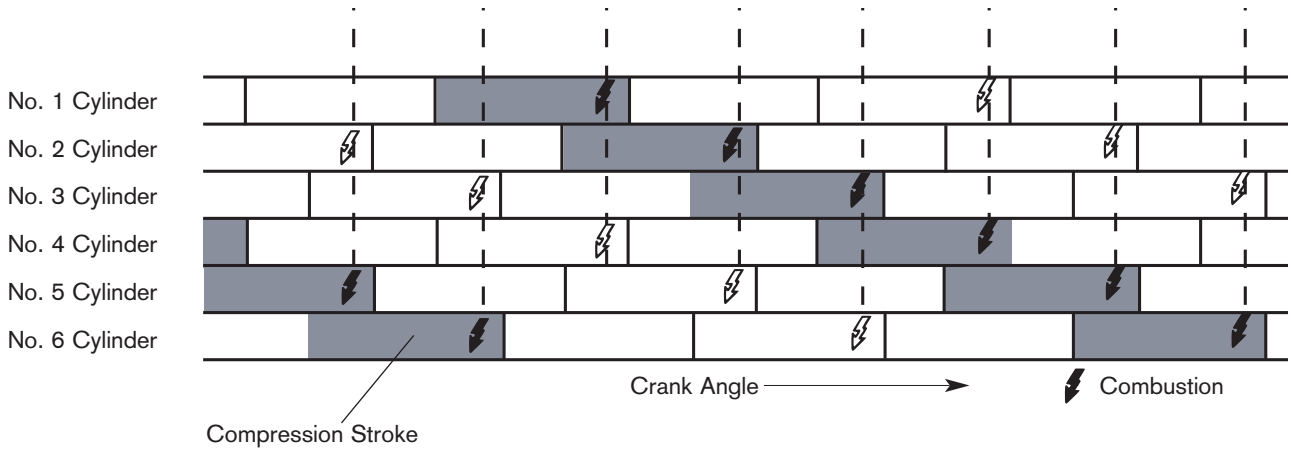

Fig. 3-37
T852f164

The high voltage generated in the secondary winding is applied directly to each spark plug. In one of the spark plugs, the spark passes from the center electrode to the side electrode, and at the other spark plug the spark is from the side to the center electrode.

Simultaneous Ignition Current Flow

One spark plug will always have the spark going from the center to side electrode, the other spark plug from the side to center electrode.

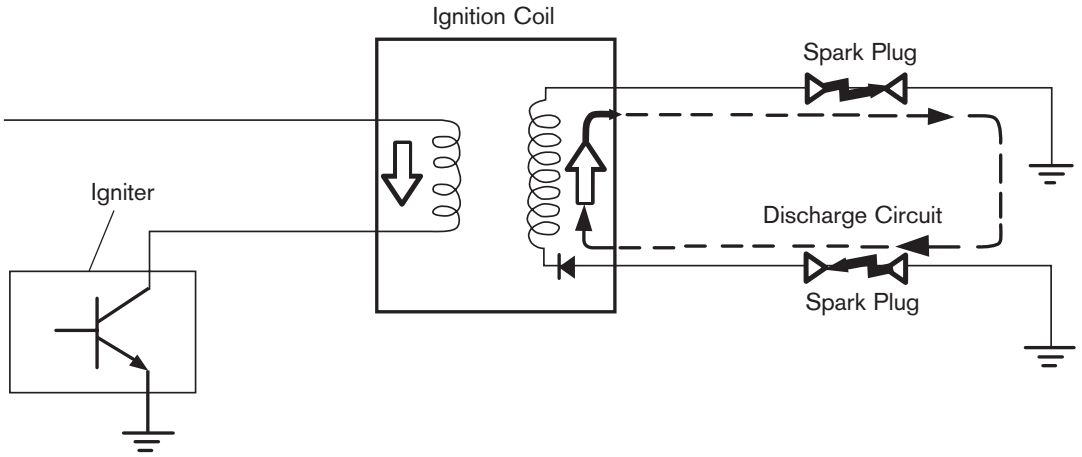

Fig. 3-38
T852f165

Typically, the spark plugs with this style of ignition system are platinum tipped for stable ignition characteristics.

The voltage necessary for a spark discharge to occur is determined by the spark plug gap and compression pressure. If the spark plug gap between both cylinders is equal, then a voltage proportional to the cylinder pressure is required for discharge. The high voltage generated is divided according to the relative pressure of the cylinders. The cylinder on compression will require and use more of the voltage discharge than the cylinder on exhaust. This is because the cylinder on the exhaust stroke is nearly at atmospheric pressure, so the voltage requirement is much lower.

When compared to a distributor ignition system, the total voltage requirement for distributorless ignition is practically the same. The voltage loss from the spark gap between the distributor rotor and cap terminal is replaced by the voltage loss in the cylinder on the exhaust stroke in the Distributorless Ignition System.

Direct Ignition System (DIS)

As DIS has evolved, there have been changes to the function and location of the igniter. With independent ignition DIS, there may be one igniter for all cylinders or one igniter per cylinder. On simultaneous ignition DIS there is one igniter for all coils. The following gives an overview of the different types used on various engines.

1MZ-FE 94 DIS

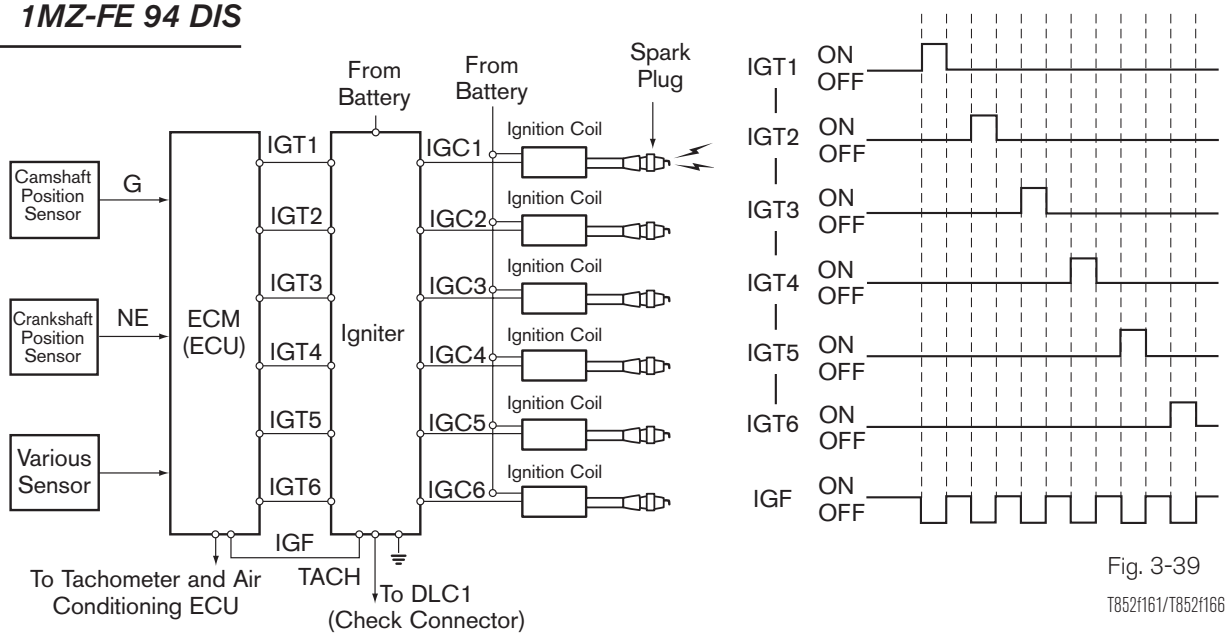

Fig. 3-39

T852f161/T852f166

1MZ-FE 94 DIS

This DIS uses one igniter for all coils. The IGF signal goes low when IGT is turned on. The coils in this system use a high voltage diode for rapid cutoff of secondary ignition. If a coil is suspected of being faulty, swap with another coil.

1MZ-FE 94 DIS Igniter

With one igniter for all coils, there are 6 IGT signal wires used to signal the igniter. Primary current flows through the IGC wires.

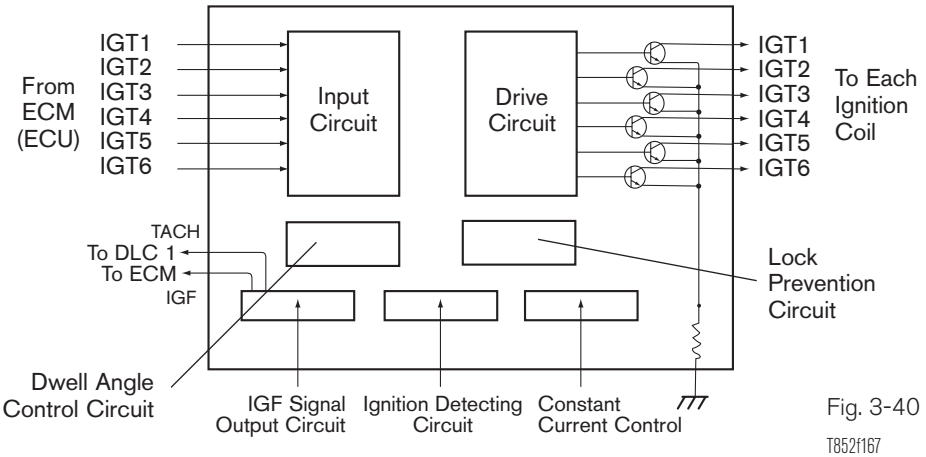

Fig. 3-40

T852f167

Ignition Coil with Diode

With the diode in the circuit, it is recommended to swap coils to test for a faulty coil.

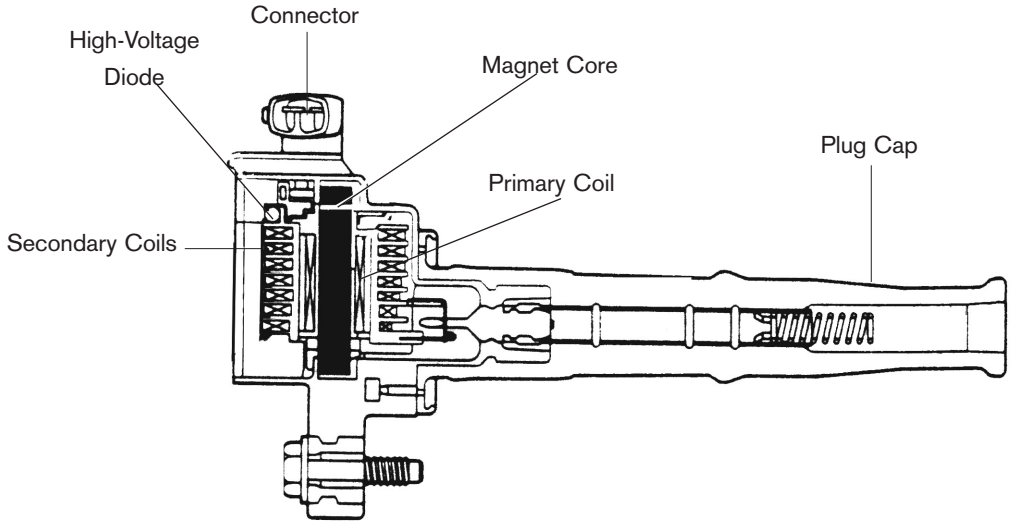

Fig. 3-41
T852f168

High Voltage Diode

The diode is in the secondary circuit.

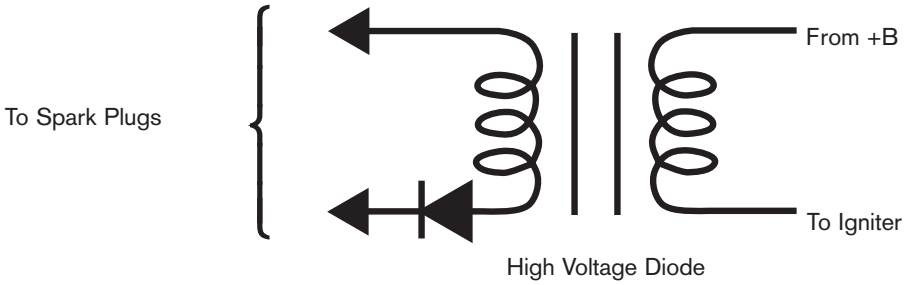

Fig. 3-42
T852f169

1MZ-FE with DIS Simultaneous Ignition

This system uses three IGT signals to trigger the ignition coils in the proper sequence. When a coil is turned on, IGF goes low.

1MZ-FE with DIS Simultaneous Ignition

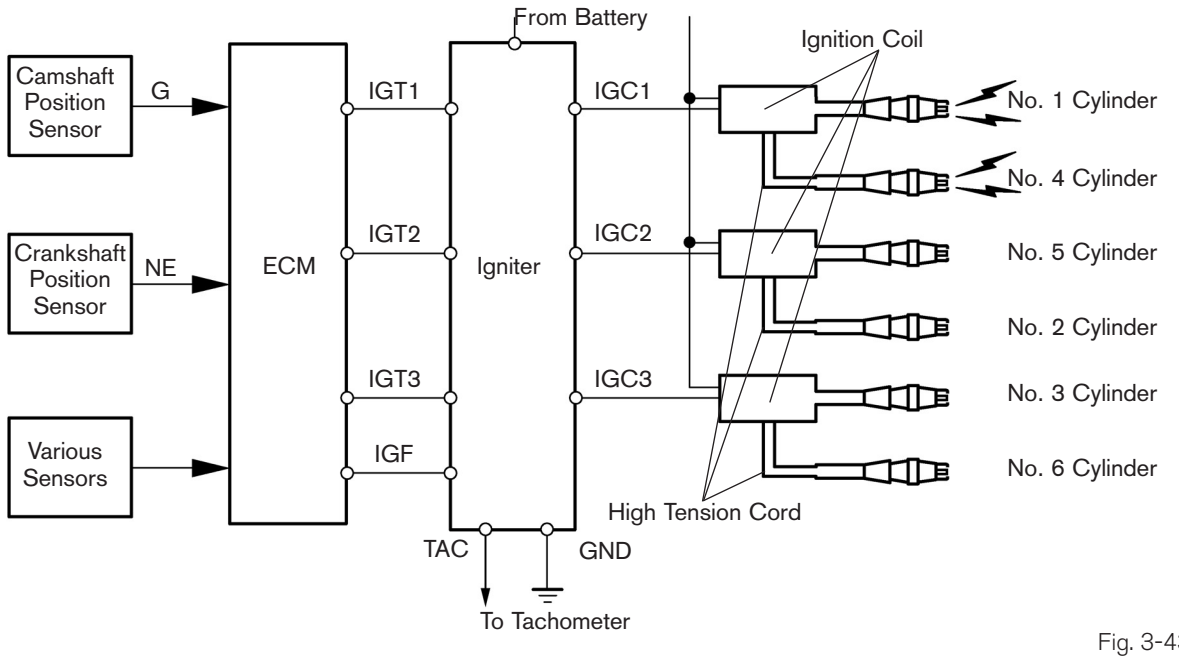

Fig. 3-43

T852f163

Igniter

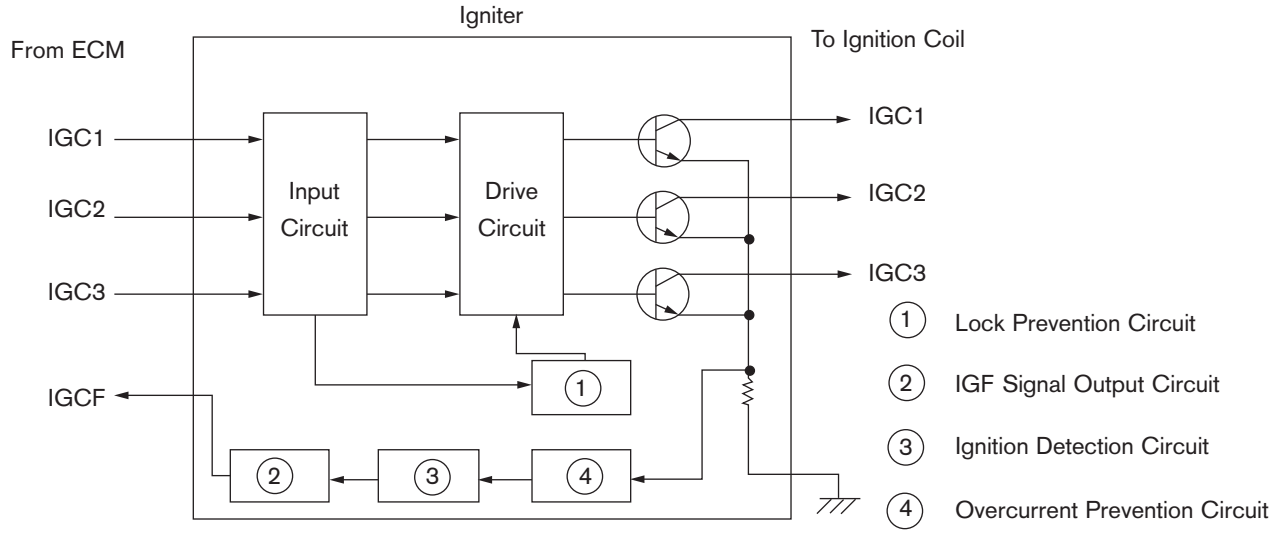

Fig. 3-44

T852f170

V-6 Igniter Sequence

When a coil is turned on, IGF goes low.

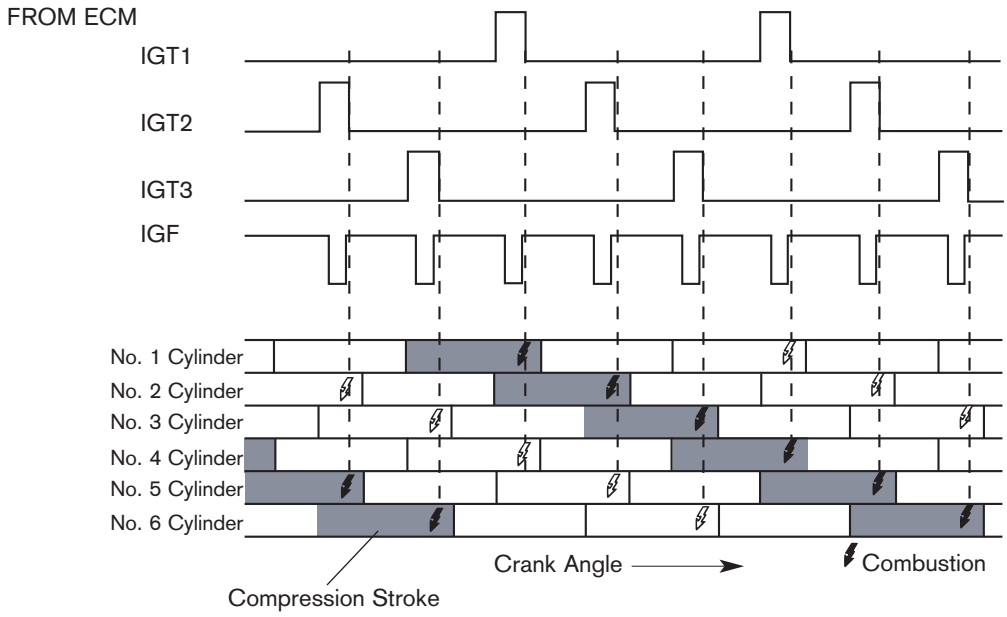

Fig. 3-45

T852f164

In-Line 6 Cylinder

The in-line 6 has a different firing order and cylinders are paired differently.

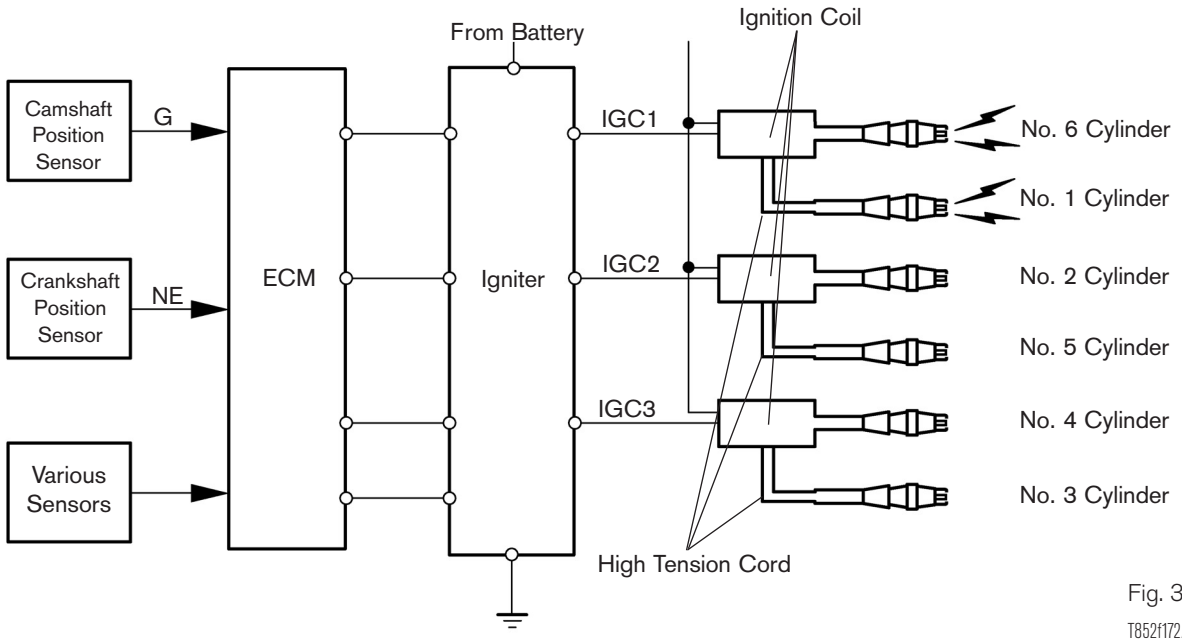

Fig. 3-46

T852f172/T852f173

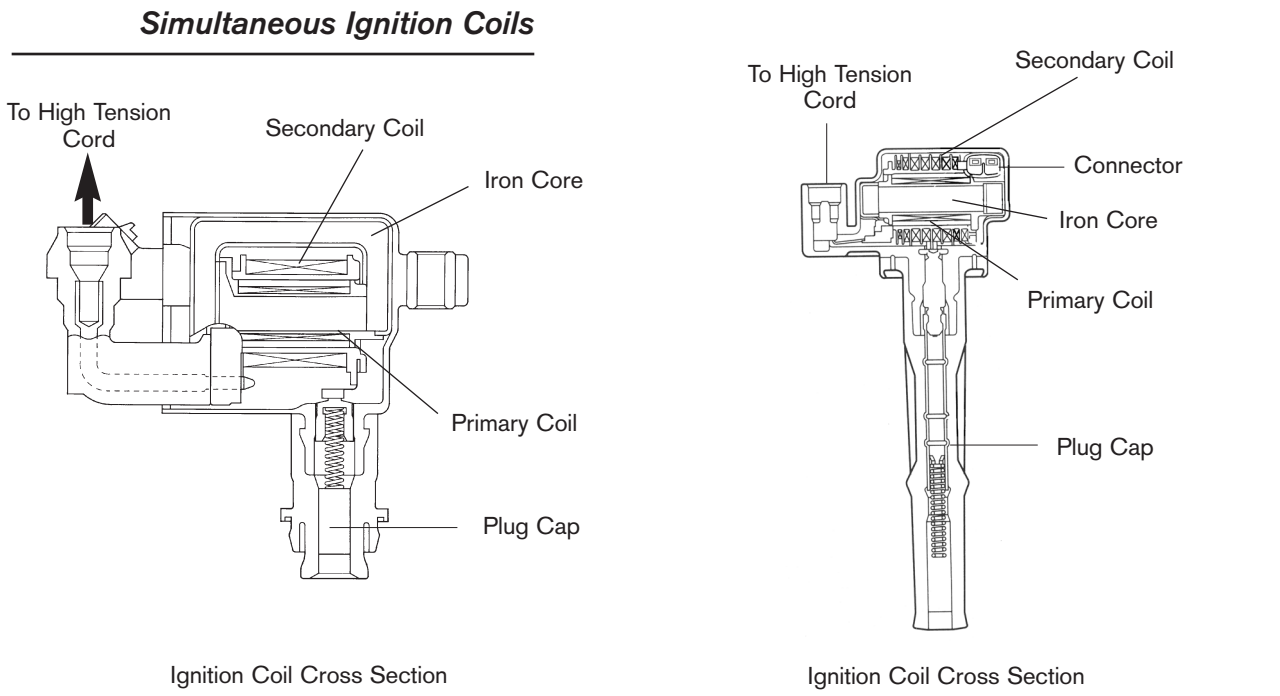

Fig. 3-47

T852f174/T852f175

DIS with Independent Ignition

The DIS with independent ignition has the igniter built into the coil. Typically, there are four wires that make up the primary side of the coil:

- +B
- IGT signal
- IGF signal
- Ground

The ECM is able to distinguish which coil is not operating based on when the IGF signal is received. Since the ECM knows when each cylinder needs to be ignited, it knows from which coil to expect the IGF signal.

The major advantages of DIS with independent ignition are greater reliability and less chance of cylinder misfire.

V-6 1MZ-FE with DIS

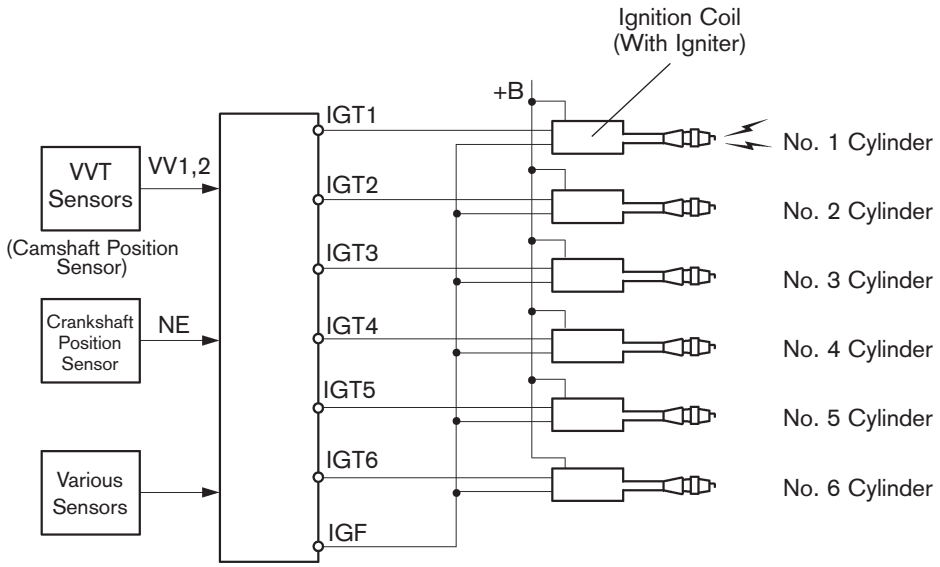

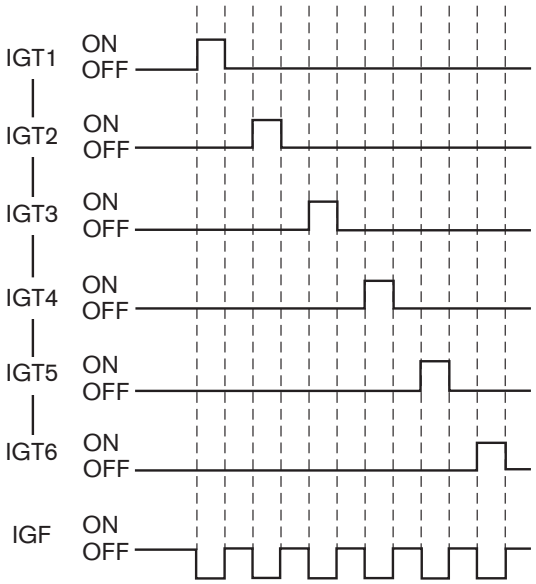

Fig. 3-48

T852f176/T852f166

Ignition Coil with Integrated Igniter

This style is used on DIS with independent ignition.

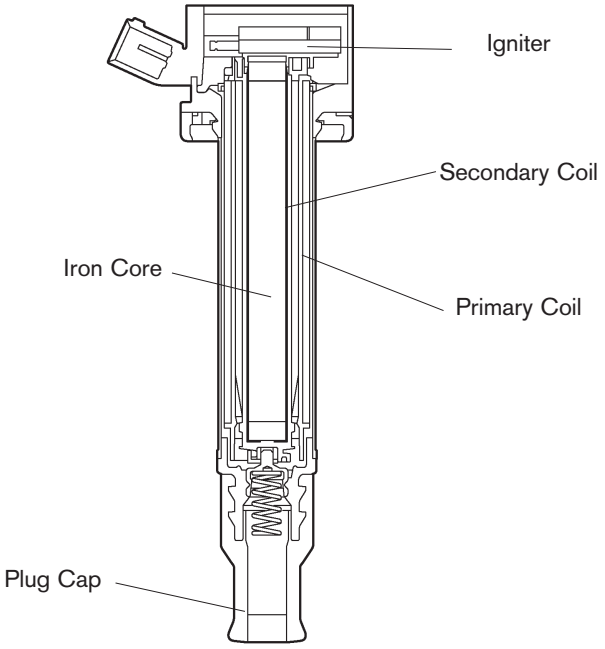

Ignition Coil Cross Section

Fig. 3-49

T852f171

V-8 with DIS

Each coil is controlled by a separate IGT signal.

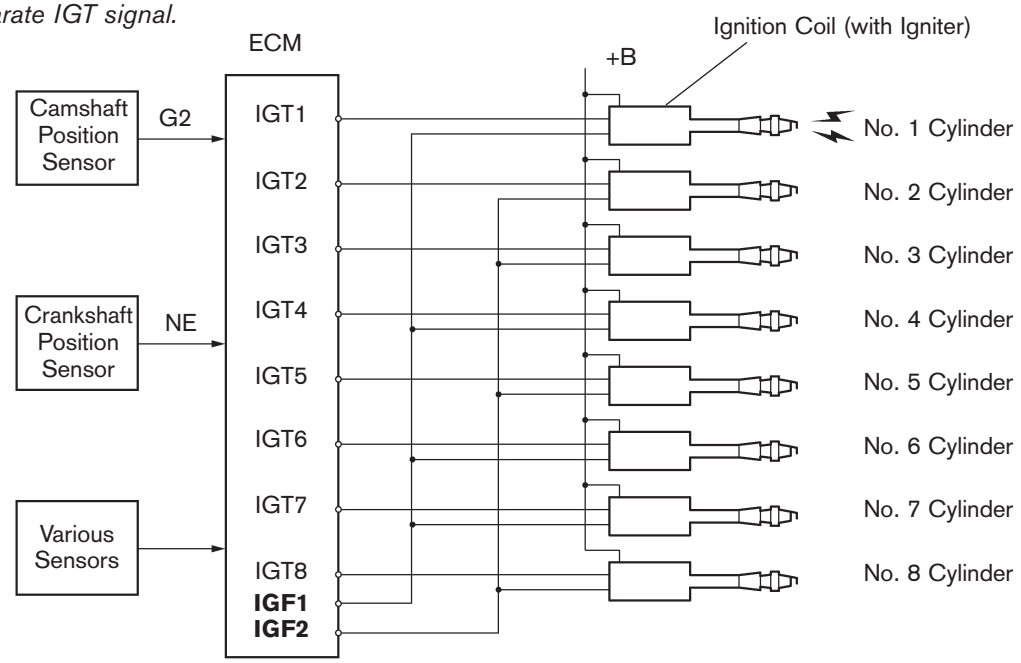

Fig. 3-50

T852f138

3UZ-FE Ignition System

The IGF signal is carried back to the ECM by four IF lines. Each IF line is connected to cylinder pairs on the same back. This is done for increased sensitivity and control.

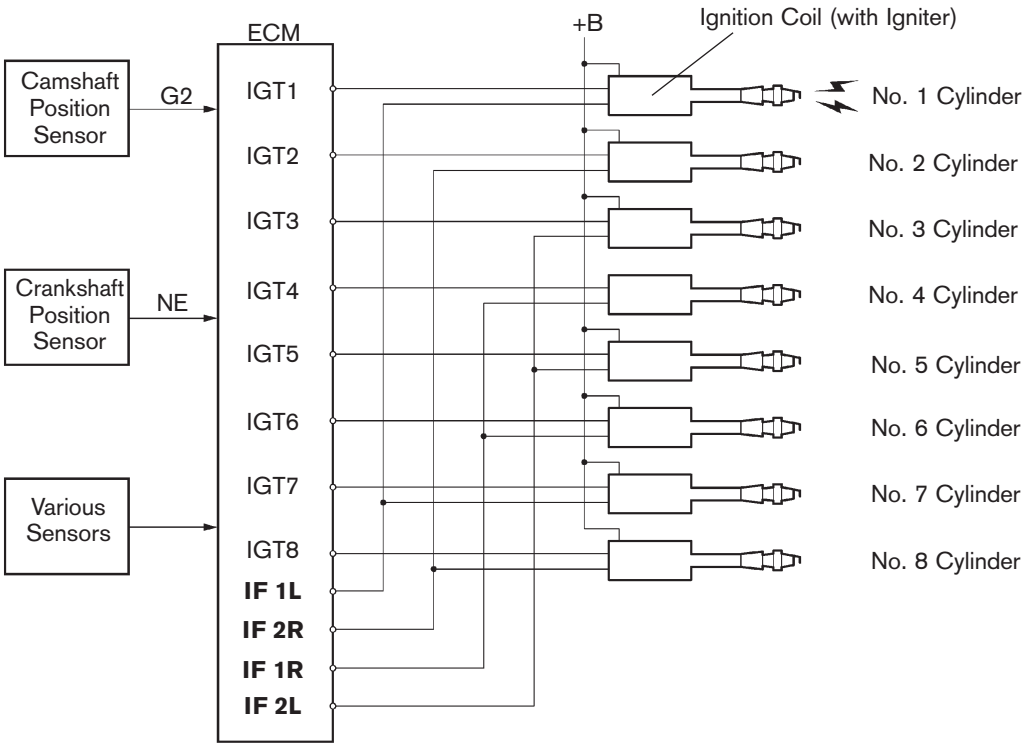

Fig. 3-51

L852f804

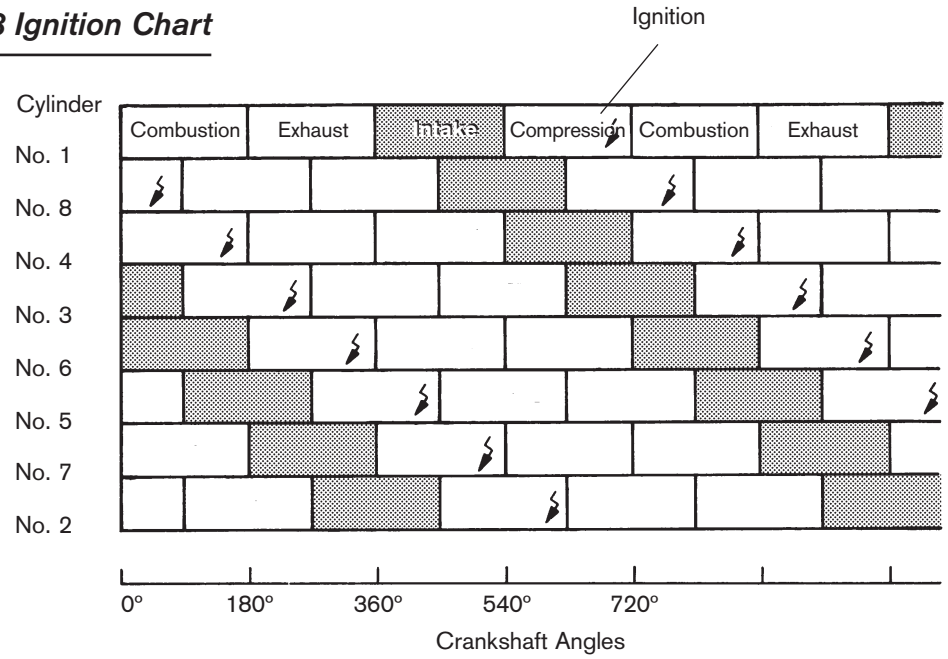

Fig. 3-52
T852f177

Ignition Advance Service

Though the Diagnostic Tester shows the computed ignition, advance, using a timing light confirms that advance took place and the timing marks are in the correct position.

With Distributor Ignition Systems, the point at which ignition occurs may vary because the base reference point can be moved. It is critical that the base reference point be set to factory specifications.

With DLI and DIS, the base reference point is determined by the Crankshaft Position Sensor and rotor, which is non-adjustable.

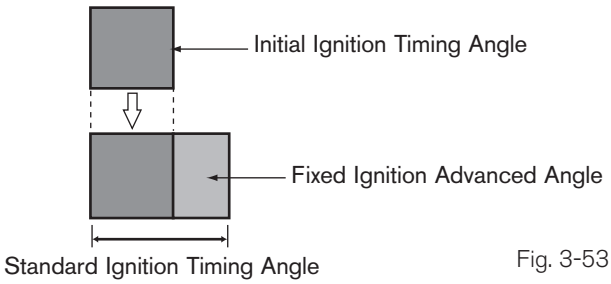

Fig. 3-53
T852f178

The angle to which the ignition timing is set during ignition timing adjustment is called the "standard ignition timing." It consists of the initial ignition timing, plus a fixed ignition advance angle (a value that is stored in the ECM and output during timing adjustment regardless of the corrections, etc., that are used during normal vehicle operation).

Ignition Timing Adjustment

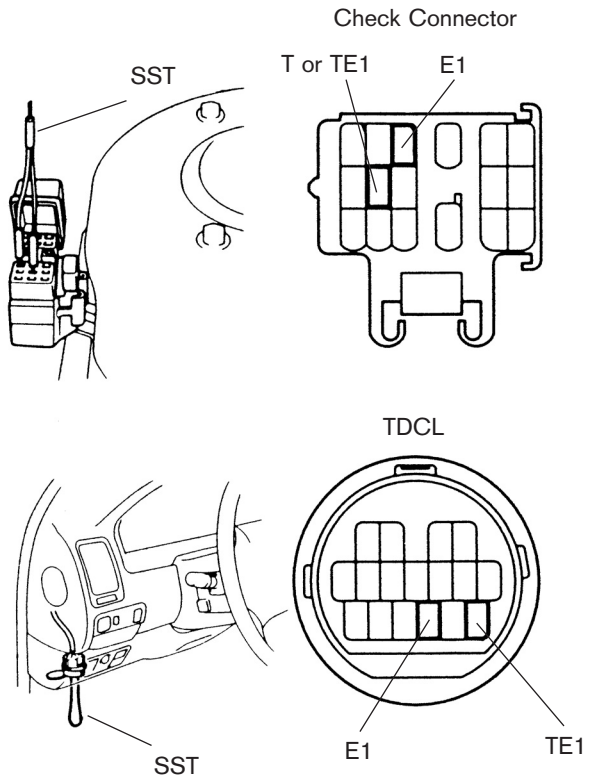

Fig. 3-54
T852f179

Ignition timing adjustment is initiated by connecting terminal T1 (or TE1) of the check connector or TDCL with terminal E1, with the idle contacts on. This will cause the standard ignition timing signal to be output from the back-up IC in the same way as during after-start ignition control.

The standard ignition timing angle differs depending on the engine model. When tuning up the engine, refer to the repair manual for the relevant engine.

NOTE Even if terminal T1 or TEl and terminal El are connected, the ignition timing will not be fixed at the standard ignition timing unless the idle contacts are on.

Where the G and NE signal generators are in a fixed position (distributorless or direct ignition systems), ignition timing cannot be adjusted.

Diagnostics

When the igniter is built into the ignition coil, it is not possible to do a resistance check of the primary coil winding. A bad primary winding will have to be determined by checking other functions of the coil and the ignition circuit.

DTC 1300 series will set, depending on the engine and type of ignition system, when the ECM does NOT receive the IGF signal. IGF confirms the primary circuit of the ignition system is working. Lack of IGF signal indicates a malfunction in the primary circuit or IGF signal related components.

If the DTC 1300 is set based on IGF, visually check the ignition system and then check for spark. If spark is present, the engine will start then stall when the ECM does not detect IGF (EXCEPT on some engines equipped with DIS with integrated igniter). In addition, when spark is present this confirms the secondary and primary circuits are good. The problem is most likely with the IGF circuitry.

WORKSHEET 3–1
Ignition System

Vehicle	Year/Prod. Date	Engine	Transmission

Technician Objectives

With this worksheet, you will learn to locate and test ignition power and ground circuits, igniter, secondary ground circuits, and timing using the required tools and equipment, retrieve and apply the needed service information, and retrieve and interpret service data information.

Tools and Equipment

- Vehicle Repair Manual
- Vehicle EWD
- Diagnostic Tester
- Hand Tool Set

Section 1

1. What is the engine firing order?

_____

2. According to the EWD, match the ignition coil to the engine cylinder(s) and IGT wire color (may be called IGC on some older ignition systems).

_____

Ignition Coil	Cylinder	IGT Wire Color

3. List any fuses and relays that supply the igniter and ignition coil(s).

_____

Section 2

1. According to the Repair Manual, perform an ignition timing check. Use the Diagnostic Tester for readings. What happened to ignition timing?

_____

Section 3

1. If the ignition coil puts out a spark, but there is a DTC 1300, what part of the ignition circuit do you need to check?

_____

2. For no spark coming from all ignition coils condition, list four possible components.

_____

3. What method is used to determine if the coil is defective?

_____

4. For OBD II vehicles. Disconnect the injector connector from any cylinder. Start the engine. With the DT, use Data List to bring up cylinder misfire. Does the DT show the cylinder misfire? What indicates a misfiring cylinder?

_____

Section 4

IGT & IGF Signals

1. Set the Diagnostic Tester to the Oscilloscope function, refer to Repair Manual for settings. Start the engine and draw or print the waveform at between IDLE and 1500 RPM, whichever provides the best signal.

IGT

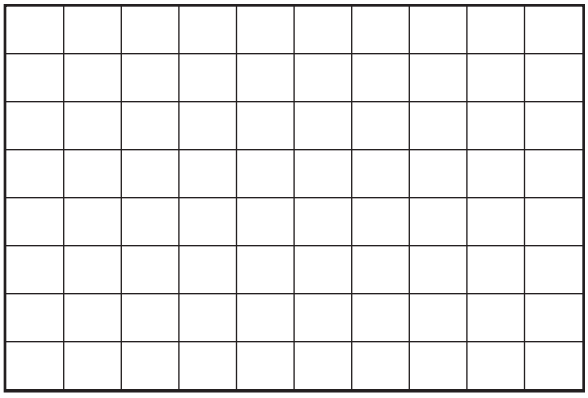

IGF

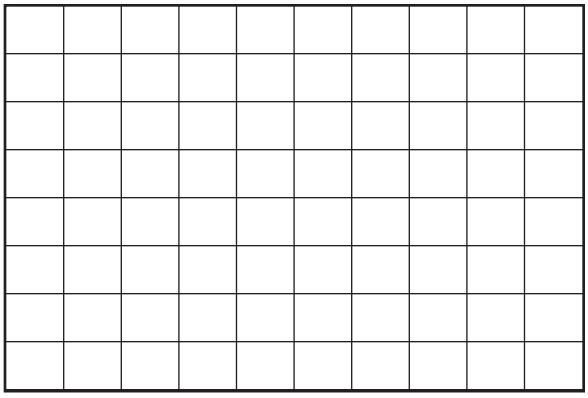

2. Does the waveform match the Repair Manual waveform?

_____

3. With a DVOM, what is the voltage specification for checking IGF?

_____

Notes

Ignition System

Name _____ Date _____

Review this sheet as you are doing the worksheet. Check each category after completing the worksheet and instructor presentation. Ask the instructor if you have questions. The comments section is for you to write where to find the information, questions, etc.

Topic	I have questions	I know I can	Comment
Locate components in the ignition system using the EWD and RM			
Find wire colors, pin numbers in the ignition system using the EWD and RM			
Locate the ignition system components readings from the Data List			
Measure the IGF voltage signal with a DVOM			
Check base ignition timing and adjust if applicable			
Observe the IGF and IGT voltage signal pattern with an oscilloscope			
Test ignition system power circuits for voltage and ground side for continuity			
Test wires for continuity/resistance and compare to specifications to determine condition			
Test ignition coil(s) and compare to specifications to determine condition			
Check and retrieve relevant DTCs			
Describe purpose of IGT and IGF signal			

Notes

Fuel Systems

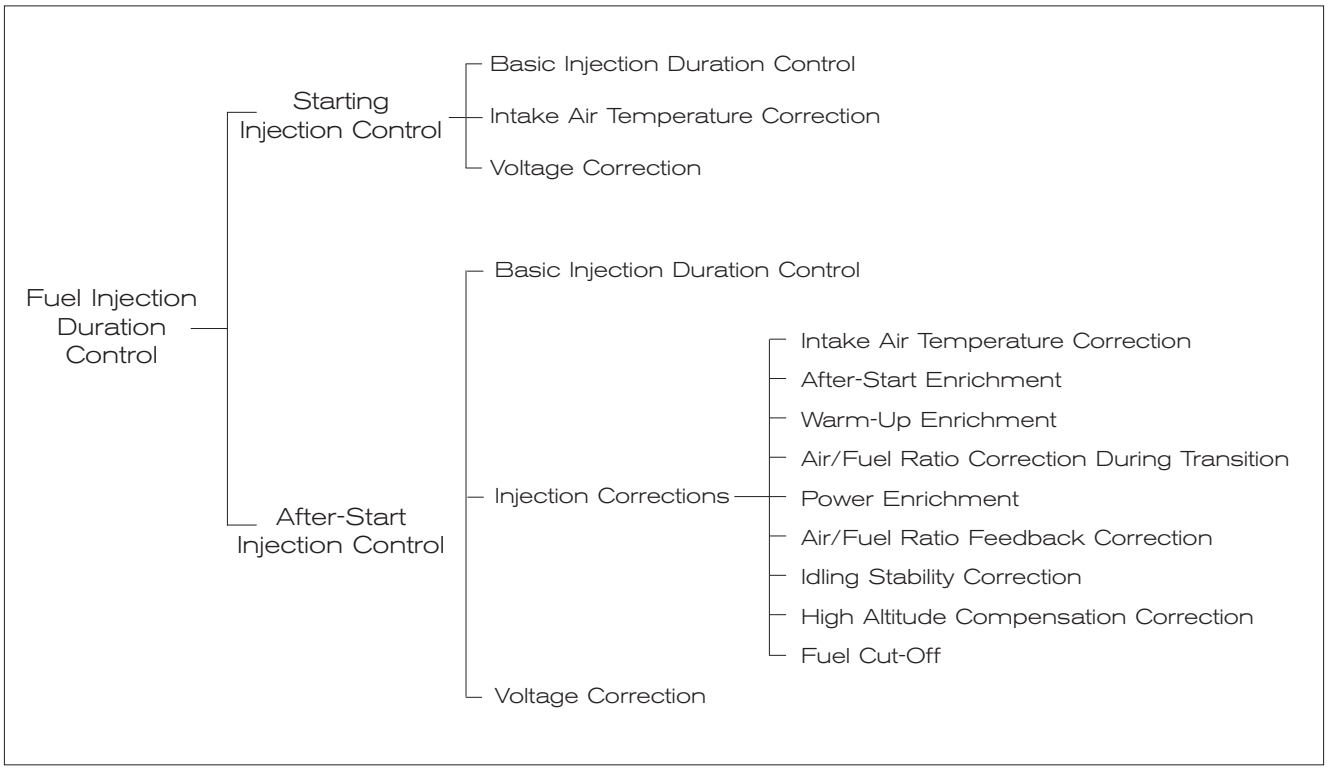

Lesson Objectives

1. Determine the condition of the fuel delivery system based on fuel pressure
2. Determine the root cause of a failure(s) in the fuel delivery system using appropriate diagnostic procedures
3. Determine the condition of the fuel injection system based on engine data
4. Determine the root cause of a failure(s) in the fuel injection system using the appropriate diagnostic procedures

Notes

Fuel Systems

Fuel Injection System

The purpose of the fuel injection system is to precisely inject a metered amount of fuel at the correct time. Based on the input sensor signals, the ECMs programming will decide when to turn each injector on and off.

Fuel Delivery System

The purpose of the fuel delivery system is to quietly deliver the proper volume of fuel at the correct pressure. The fuel delivery system must also meet emission and safety regulations. Major components are:

- Fuel Pump
- Fuel Pump ECU
- Pressure Regulator
- Fuel Pressure Control Circuit
- Fuel Lines
- Fuel Tank
- Fuel Filter
- Pulsation Damper
- Fuel Injectors
- Inertia Switch

Return Fuel Delivery System

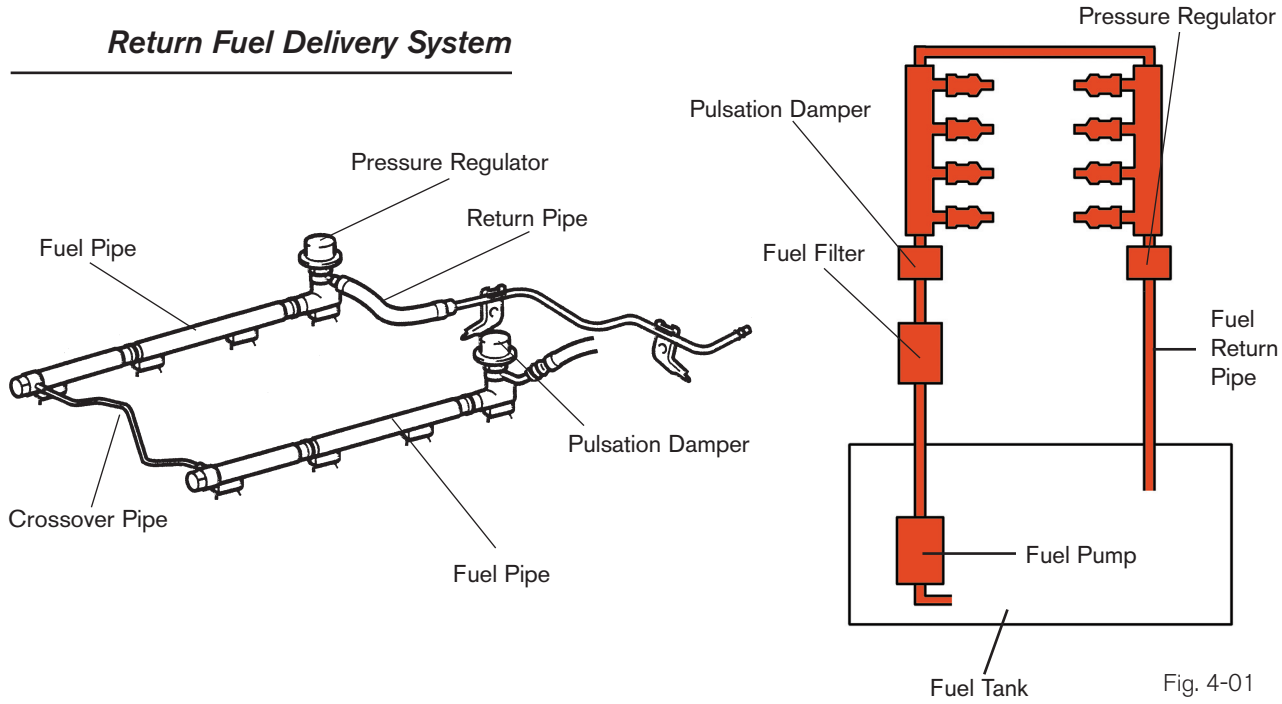

Fig. 4-01

T852f180/T852f181

Return Fuel Delivery System

When the fuel pump is activated by the ECM, pressurized fuel flows out of the tank, through the fuel filter to the fuel rail and up to the pressure regulator. The pressure regulator maintains fuel pressure in the rail at a specified value. Fuel in excess of that consumed by engine operation is returned to the tank by a fuel return line. A pulsation damper, mounted on the fuel rail, is used on many engines to dampen pressure variations in the fuel rail. The injectors, when turned on by the ECM, deliver fuel into the intake manifold. When the fuel pump is turned off by the ECM, a check valve in the fuel pump closes maintaining a residual pressure in the fuel system.

Returnless Fuel Delivery System

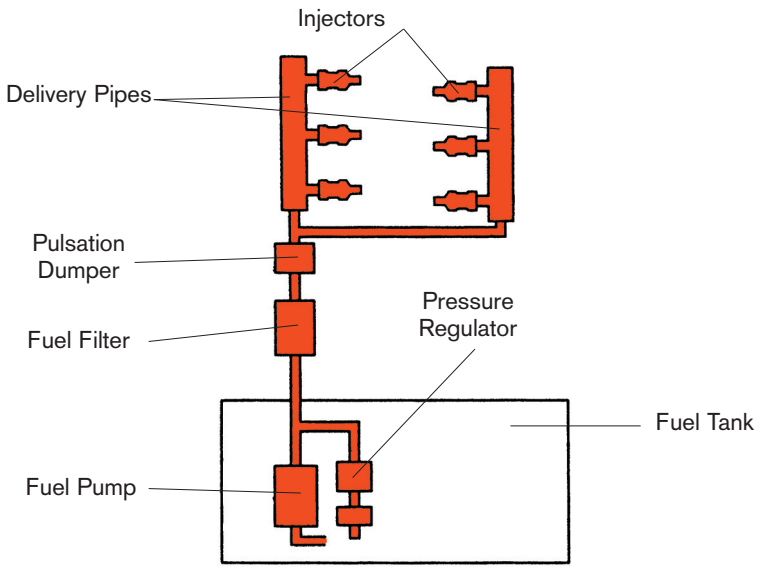

Fig. 4-02

T852f182

Returnless Fuel Delivery System

When the fuel pump is activated by the ECM, pressurized fuel flows from the pump to the pressure regulator. At the pressure regulator excess fuel is directed to the bottom of the fuel tank and pressurized fuel is sent out of the fuel tank, through the fuel filter, pulsation damper, and into the fuel rail. When the ECM turns on the injectors fuel is delivered into the intake manifold.

Fuel pressure in this system is maintained at a constant and higher pressure, 44-50 psi (301-347 kPa) than the return fuel system. ECM programming and a higher fuel pressure eliminates the need for a vacuum modulated pressure regulator.

The returnless fuel delivery system was adopted because it lowers evaporative emissions since no heated fuel is returned to the fuel tank. On the return fuel delivery system, fuel heated by the engine returns to the fuel tank and has warmer fuel creating more fuel vapors.

Fuel Pump

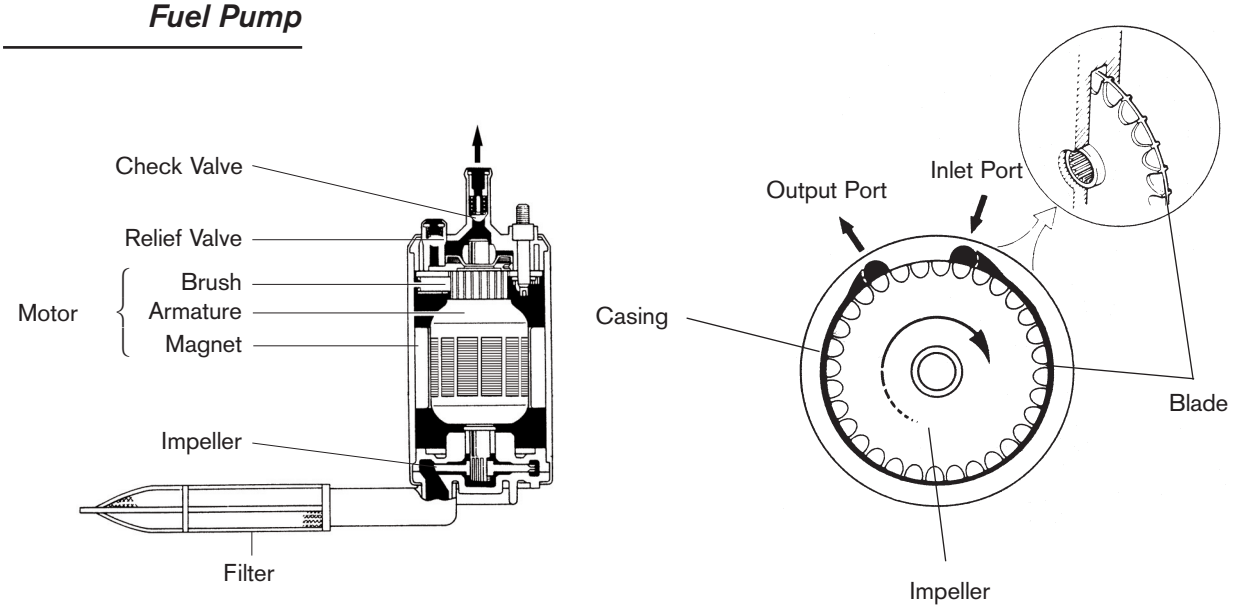

Fig. 4-03

T852f183/T852f184

Fuel Pump The fuel pump is mounted in the tank and immersed in fuel. The fuel cools and lubricates the pump. When current flows through the motor, the armature and impeller rotate. The impeller draws fuel in through a filter and discharges pressurized fuel through the outlet port. The fuel pump's pumping capacity is designed to exceed engine requirements. This insures that there will always be enough fuel to meet engine demands.

An outlet check valve, located in the discharge outlet, maintains a residual fuel pressure in the fuel system when the engine is off. This improves starting characteristics and reduces vapor-lock. Without residual fuel pressure, the system would have to be pressurized each time the engine was started and this would increase engine starting (cranking) time. When a hot engine is shut off, fuel temperature in the lines around the engine increases. Keeping the system pressurized increases the boiling point of the fuel and prevents the fuel from vaporizing.

A pressure relief valve will open if the fuel system becomes restricted. This is a safety device to prevent the fuel lines from rupturing and damage to the pump.

On many models the fuel pump is part of the fuel pump assembly. This assembly contains the filters, pressure regulator (returnless fuel system only), sending unit, and fuel pump. Many of the components can be serviced separately.

Typical Fuel Pump Assembly

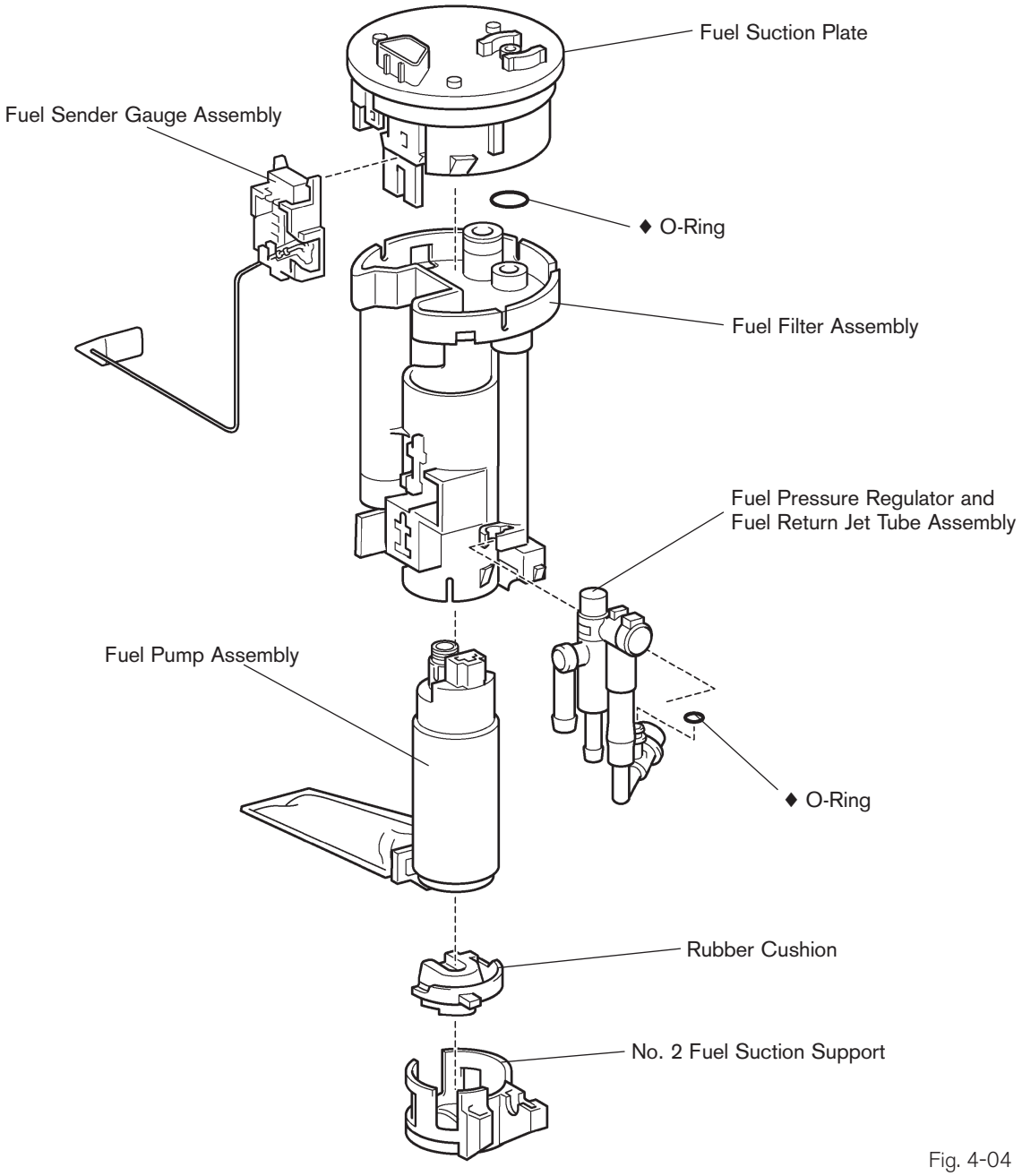

Fig. 4-04

T852f185

Jet Pump

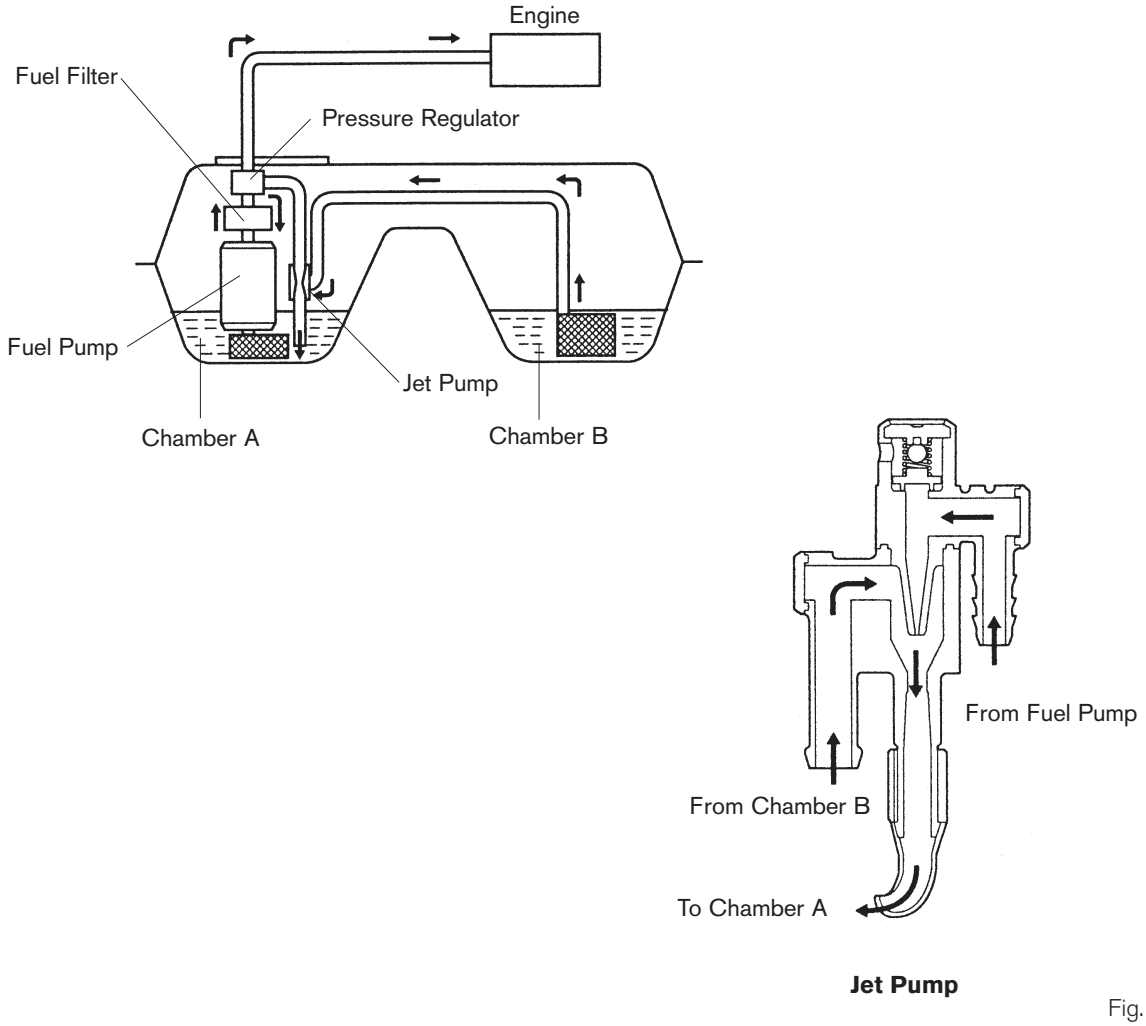

Jet Pump

Fig. 4-05

T852f186/T852f187

Jet Pump The jet pump is an additional pump used when the fuel tank bottom is divided into two chambers. Excess fuel flowing through the fuel return passes through a venturi. This creates a low pressure area around the venturi, and this action will draw the fuel out of Chamber B, and sends it into Chamber A.

Fuel Pump Control

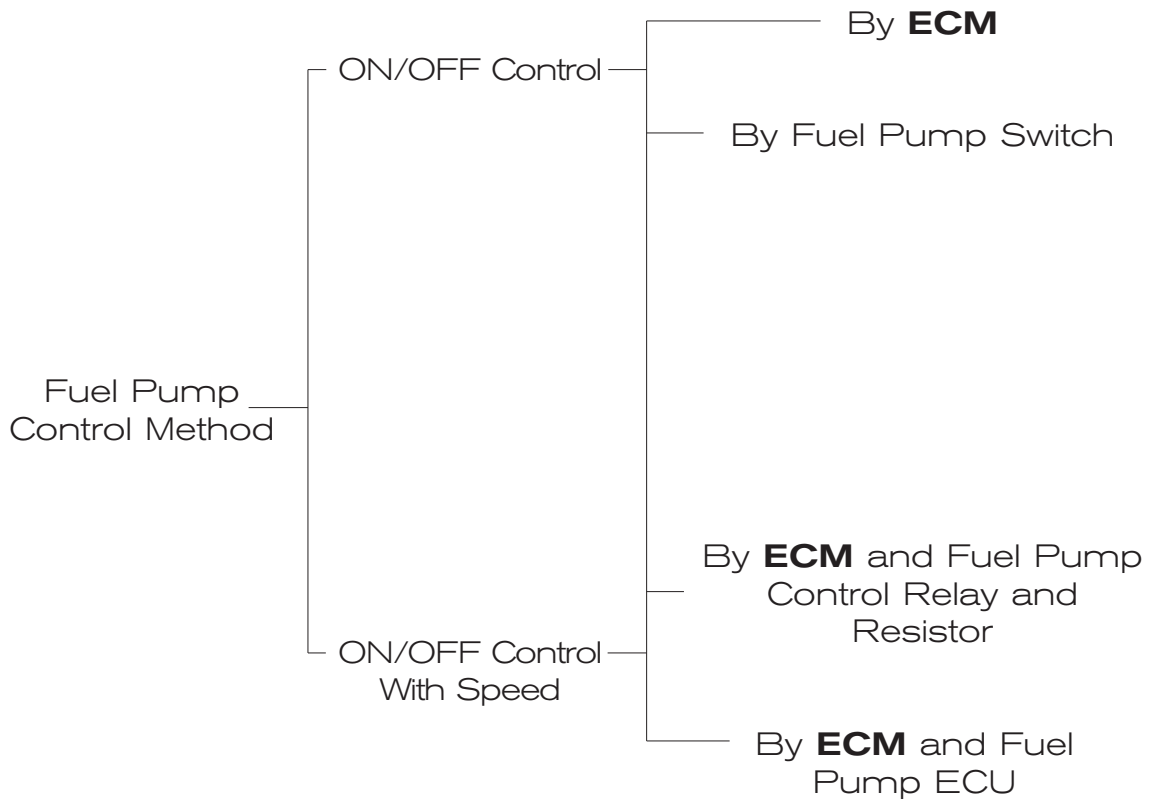

Fig. 4-06

Fuel Pump Controls

A variety of fuel pump control circuits and controls have been used over the years. The following basic methods are:

- ON/OFF Control by ECM
- ON/OFF Control by Fuel Pump Switch
- ON/OFF Two Speed Control with a Resistor
- ON/OFF Two Speed Control with Fuel Pump ECU
- ON/OFF Three Speed Control with Fuel Pump ECU

The most accurate way of determining the type of fuel control circuit is to look up the circuit in the appropriate EWD.

The following describes the basic methods of fuel pump control. An essential point to remember is that the fuel pump operates only when the engine is cranking or running.

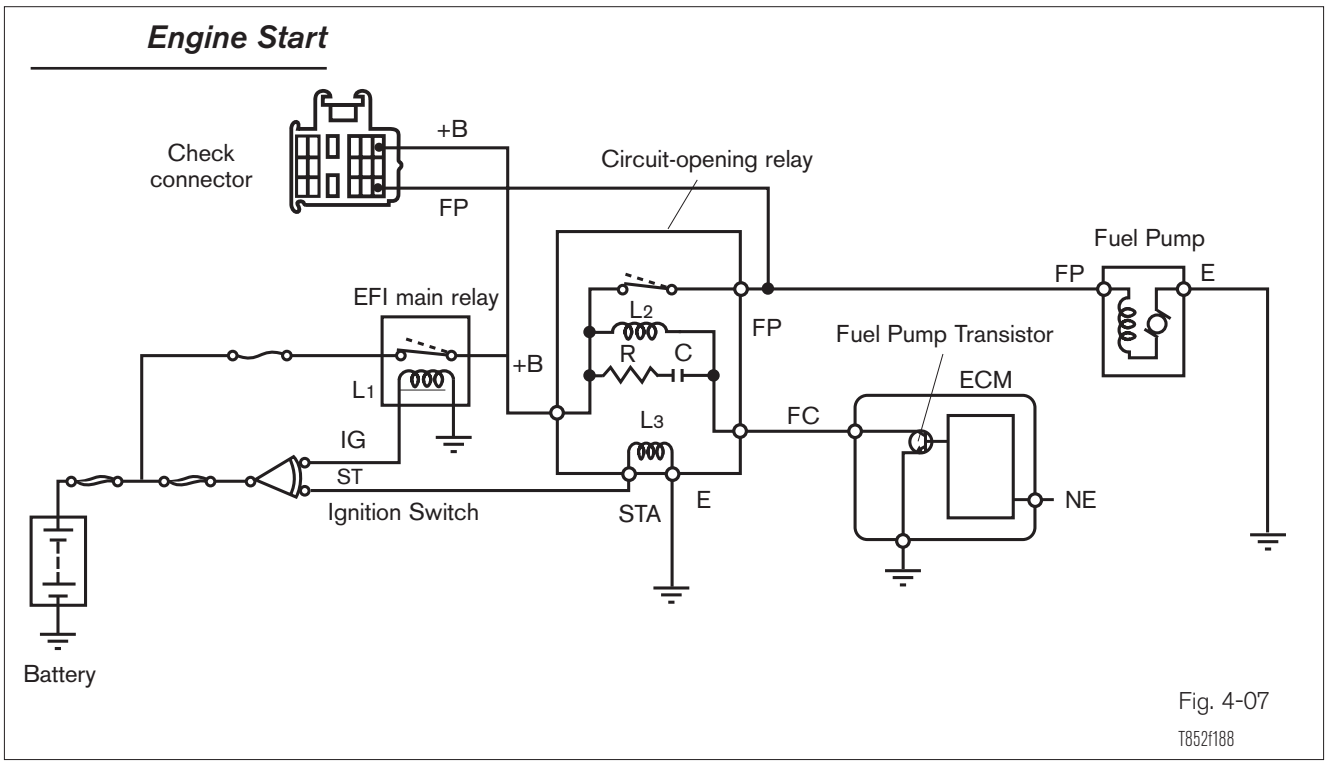

Fig. 4-07

T852f188

ON/OFF Control by ECM

The following is an explanation of how the fuel pump circuit is activated.

Engine Start

When the engine is cranking, current flows from the IG terminal of the ignition switch to the L1 coil of the EFI main relay, turning the relay on. At the same time, current flows from the ST terminal of the ignition switch to the L3 coil of the circuit opening relay, turning it on to operate the fuel pump. The fuel pump is now supplying fuel to the fuel injection system.

NOTE The circuit opening relay in this example is ground side switched.

Engine Running

Once the engine starts and the ignition key is moved to the ON (IG) position, current to the L3 coil is shut off, but the ECM will keep the fuel pump on through coil L2 as long as the ECM receives an NE signal. If the NE signal is lost at any time after starting, the ECM turns the fuel pump off.

Engine Stopped

When the engine stops, the NE signal to the ECM stops. This turns off the transistor, thereby cutting off the flow of current to the L2 coil of the circuit opening relay. As a result, the circuit opening relay opens turning off the fuel pump.

NOTE

The resistor R and the capacitor C in the circuit-opening relay are for the purpose of preventing the relay contacts from opening when current stops flowing in coil L2 due to electrical noise (fuel pumps controlled by the ECM) or to sudden drops in the intake air volume (fuel pumps controlled by fuel pump switch). They also serve to prevent sparks from being generated at the relay contacts. On some models, an L3 coil is not provided in the circuit-opening relay.

Fuel Pump Control Switch

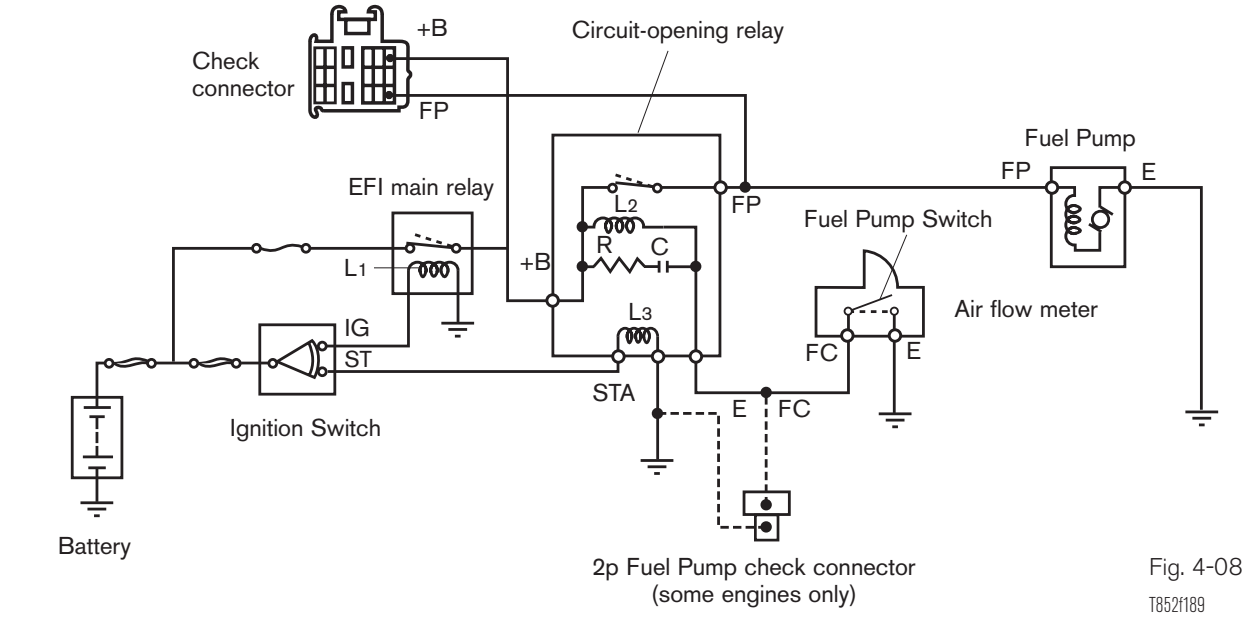

Fig. 4-08

T852f189

ON/OFF Control by Fuel Pump Switch

The fuel pump switch is found on older vehicles using a Vane Air Flow Meter. The air moves the vane when the engine is running closing the fuel pump switch. The following is an explanation of circuit operation.

Engine Start

When the engine is cranking, current flows from the IG terminal of the ignition switch to the L1 coil of the EFI main relay, turning the relay on. Current also flows from the ST terminal of the ignition switch to the L3 coil of the circuit-opening relay, turning it on to operate the fuel pump. After the engine starts, the cylinders begin drawing in air, causing the measuring plate inside the air flow meter to open. This turns on the fuel pump switch, which is connected to the measuring plate, and current flows to the L2 coil of the circuit-opening relay.

Engine Running

After the engine starts and the ignition switch is turned from ST back to IG, current flowing to the L3 coil of the circuit-opening relay is cut off. However, current continues to flow to the L2 coil while the engine is running due to the fuel pump switch inside the air flow meter being on. As a result, the circuit-opening relay stays on, allowing the fuel pump to continue operating.

Engine Stopped

When the engine stops, the measuring plate completely closes and the fuel pump switch is turned off. This cuts off the flow of current to the L2 coil of the circuit-opening relay. As a result, the circuit-opening relay goes off and the fuel pump stops operating.

Two Speed Fuel Pump Control

Large displacement engines require a higher volume of fuel during starting and heavy load conditions than small displacement engines. High capacity fuel pumps are used to meet the demand, but they produce more noise and consume more power. To overcome these disadvantages and increase pump life, a two speed fuel pump control is used.

ON/OFF Two Speed Control with a Resistor

This type uses a double contact relay and a series limiting resistor.

Two Speed Fuel Pump Control with Resistor at Low Speed

When the engine is idling, or under normal driving conditions (when a small amount of fuel is required), the ECM turns on the fuel pump control relay. The relay switches to contact B, sending current through the resistor. This reduces the available current and voltage to the fuel pump, causing it to run at low speed.

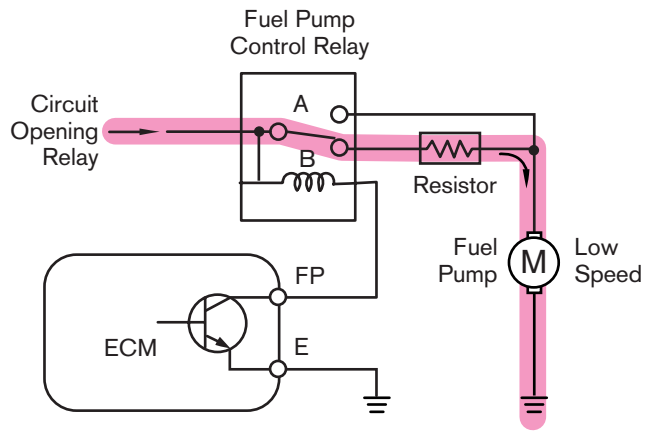

Fig. 4-09

T852f190

High Speed

When the engine is operating at high speeds or under heavy loads, the ECM turns off the fuel pump control relay. The relay switches to contact A, and the current to the fuel pump flows directly to the pump bypassing the resistor, causing the fuel pump to run at high speed.

The fuel pump also runs at high speed while the engine is starting.

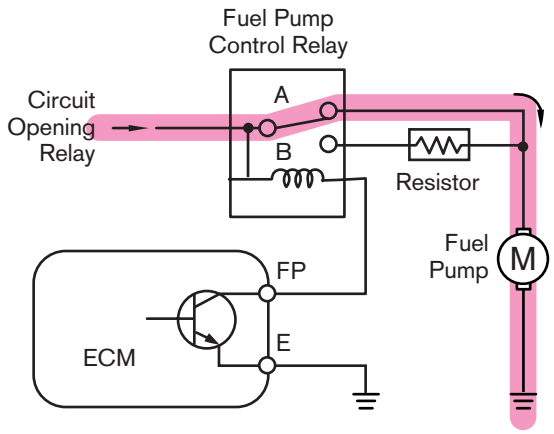

Fig. 4-10
T852f191

Two Speed Control with Fuel Pump ECU

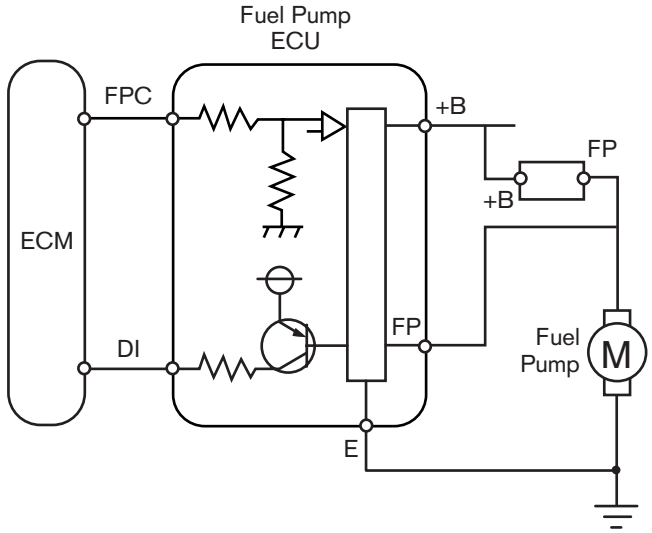

Fig. 4-11
T852f192

ON/OFF Two Speed Control with Fuel Pump ECU

This type is similar to other systems, but uses a Fuel Pump ECU. In this system, however, ON-OFF control and speed control of the fuel pump is performed entirely by the Fuel Pump ECU based on signals from the ECM. In addition, the Fuel Pump ECU is equipped with a fuel pump system diagnosis function. When trouble is detected, signals are sent from the Dl terminal to the ECM.

High Speed During starting and heavy load condition, the ECM sends a HI signal (about 5 volts) to the FPC terminal of the Fuel Pump ECU. The Fuel Pump ECU then supplies full battery power to the fuel pump.

Low Speed After the engine starts, during idle and light loads, the ECM outputs a low signal (about 2.5 volts) to the Fuel Pump ECU. Then, the Fuel Pump ECU supplies less voltage (about 9 volts) to the fuel pump.

Three Speed Fuel Pump Control

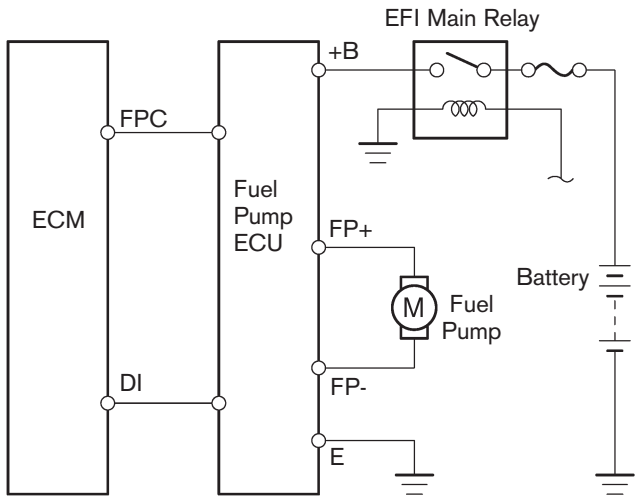

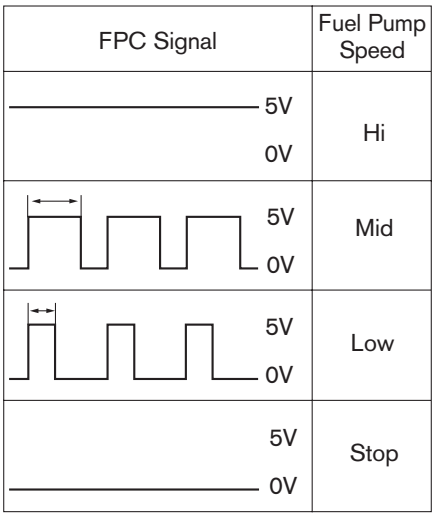

Fig. 4-12

T852f193/T852f194

Three Speed Fuel Pump Control

With this system, the fuel pump is controlled in 3 steps (high speed, medium speed, and low speed).

High Speed When the engine is operating under a heavy load at high RPM or starting, the ECM sends a 5 volt signal to the fuel pump ECU. The fuel pump ECU then applies battery power to the fuel pump causing the fuel pump to operate at high speed.

Medium Speed Under heavy loads at low speed, the ECM sends a 2.5 volt signal to the fuel pump control. The fuel pump ECU applies about 10 volts to the fuel pump. This is considered medium speed.

Low Speed When idling or under light loads, the ECM sends a 1.3 volt signal to the fuel pump ECU. The fuel pump ECU applies 8.5 volts to the fuel pump, preventing excessive noise and decreasing power consumption.

Fuel Pump Inertia Switch

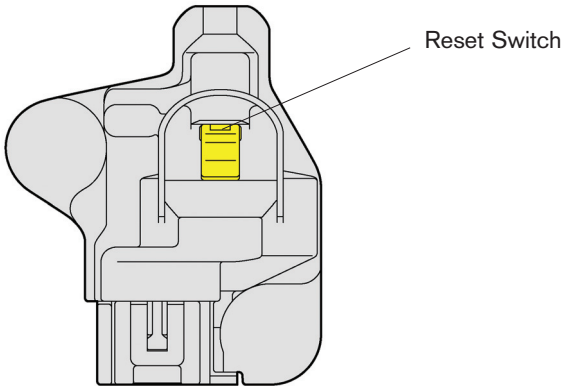

Fig. 4-13
T852f195

Inertia Switch

The fuel pump inertia switch shuts off the fuel pump when the vehicle is involved in a collision, minimizing fuel leakage.

Inertia Switch Location

The inertia switch is mounted on the floor pan.

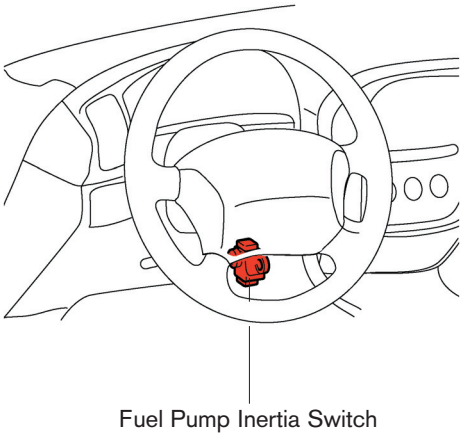

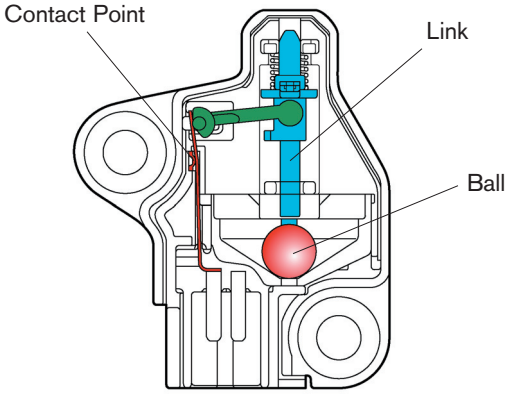

Cross Section

Fig. 4-14
T852f196/T852f197

Fuel Pump Inertia Circuit

Electrically, the fuel pump inertia switch is located between the ECM and Fuel Pump ECU.

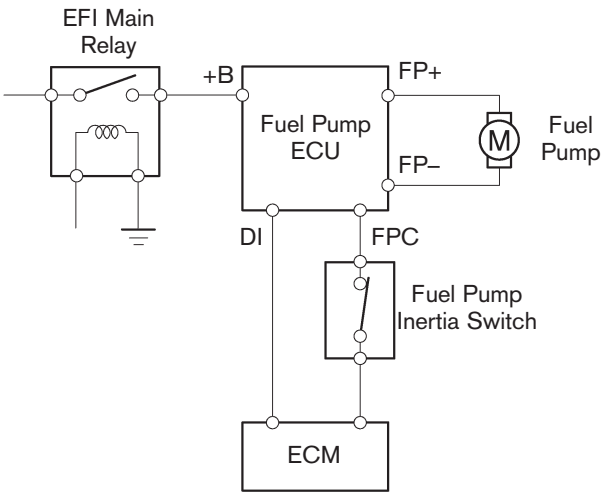

Fig. 4-15
T852f198

Inertia Switch Operation

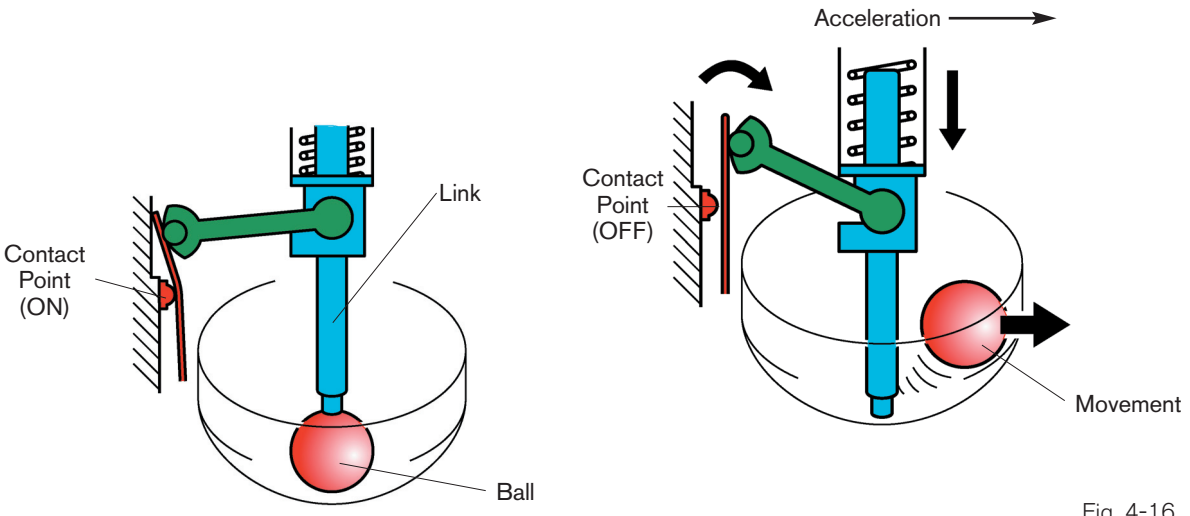

Normal **Detecting a Collision**

Fig. 4-16
T852f200/T852f199

Operation The inertia switch consists of a ball, spring loaded link, contact point, and reset switch. If the force of the collision exceeds a predetermined value, the ball will move causing the spring loaded link to drop opening the contact point. This opens the circuit between the ECM and Fuel Pump ECU causing the fuel pump to turn off. If the fuel pump inertia switch has been tripped, it can be reset by pushing up on the reset switch for at least 1 second.

Pressure Regulators

The pressure regulator must consistently and accurately maintain the correct fuel pressure. This is important because the ECM does not measure fuel system pressure. It assumes the pressure is correct. There are two basic types of pressure regulators.

Modulated Pressure Regulators

The return fuel delivery system uses a pressure regulator located on the fuel pressure rail between the fuel pressure rail and the return line to the fuel tank. There are two types of pressure regulators. One type is modulated by vacuum, the other by atmospheric pressure.

Vacuum Modulated Pressure Regulator

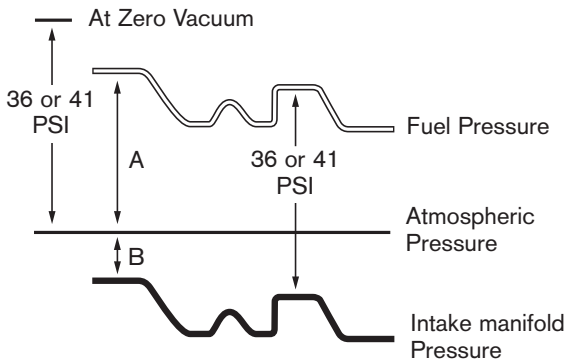

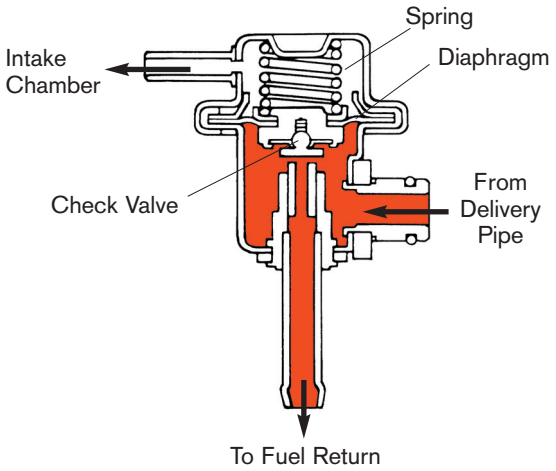

Intake Manifold Pressure	**Low**	**HIgh**
Effective Spring Tension	**Small**	**Large**
Fuel Pressure	**Low**	**High**
Injection Volume	**Same**	**Same**

Fig. 4-17

T852f201/T852f202

Vacuum Modulated Pressure Regulator

To maintain precise fuel metering, the vacuum modulated pressure regulator maintains a constant pressure differential across the fuel injector. This means that fuel rail pressure will always be at a constant value above manifold absolute pressure.

Low intake manifold pressure (idle for example) pulls on the diaphragm decreasing spring pressure. This allows more fuel to return to the fuel tank decreasing pressure in the fuel rail. Opening the throttle increases manifold pressure. With less vacuum on the diaphragm spring pressure will increase restricting fuel flow to the fuel tank. This increases pressure in the fuel rail.

Atmospheric Modulated Pressure Regulator

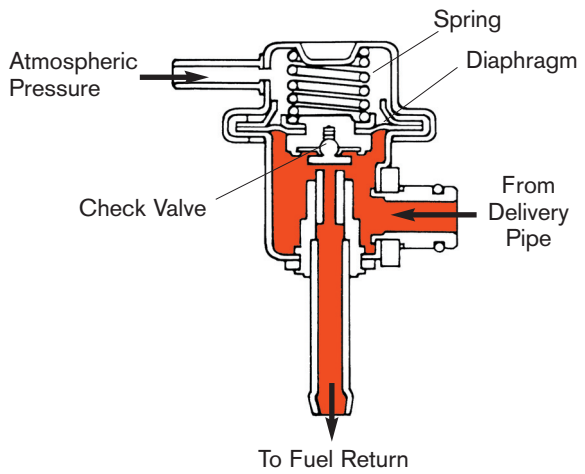

Fig. 4-18
T852f202

Atmospheric Modulated Pressure Regulator

This type is not used on Lexus engines. The following information is for your reference. The atmospheric modulated pressure regulator modifies fuel pressure with changes in atmospheric pressure. A hose is connected from the pressure regulator to the air intake hose between the air filter and throttle plate. Spring pressure and atmospheric pressure keep the fuel pressure at a constant value, 226-265 kPa (38-44 psi). As air pressure changes, such as climbing from low to high altitude, fuel rail pressure decreases because there is less force on the diaphragm.

Constant Pressure Regulator

The O-Ring must be properly seated to prevent leakage.

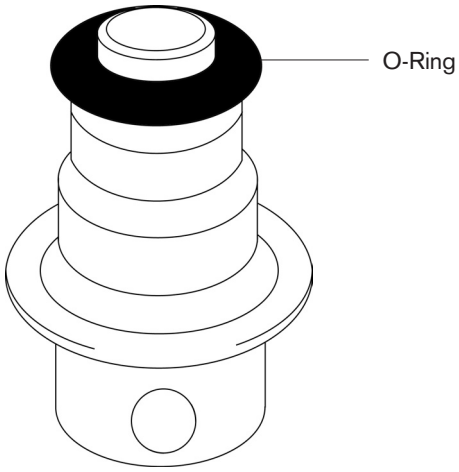

Fig. 4-19
T852f203

Constant Pressure Regulator (Returnless Fuel Delivery System)

The Returnless Fuel Delivery System uses a constant pressure regulator located above the fuel pump in the fuel tank. This type of regulator maintains a constant fuel pressure regardless of intake manifold pressure. Fuel pressure is determined by the spring inside the regulator. Fuel from the fuel pump overcomes spring pressure and some fuel is bypassed into the fuel tank. Fuel pressure is non-adjustable.

High Temperature (Pressure Up) Fuel Pressure Control

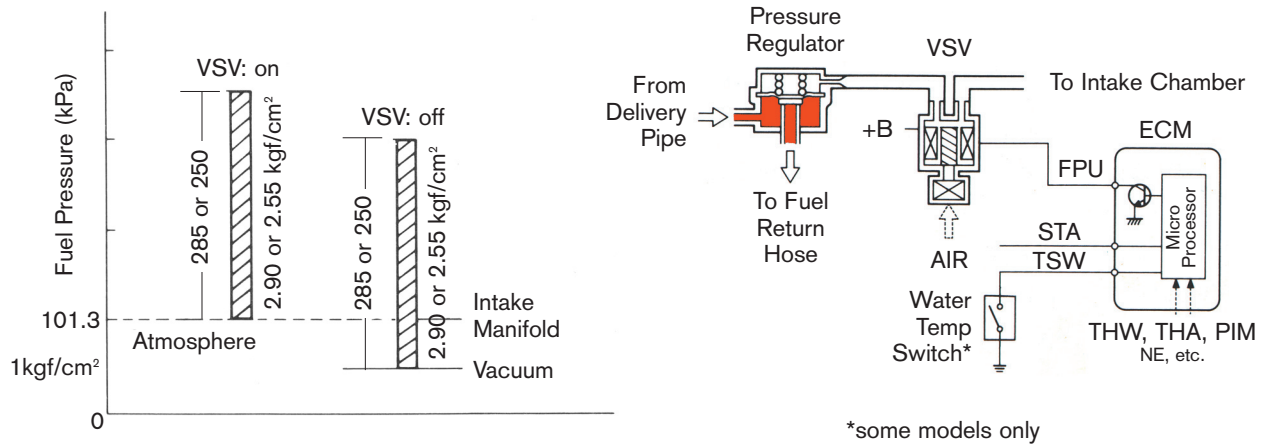

Fig. 4-20

T852f204/T852f205

High Temperature (Pressure Up) Fuel Pressure Control

Some engines are equipped with a high temperature fuel pressure control to prevent vapor lock for easier starting and better driveability. A three way VSV is connected to the fuel pressure regulator vacuum line. Under normal conditions, the VSV is off and engine vacuum regulates the pressure regulator. If the engine is started when the coolant temperature is 85°C (185°F) or higher and the intake air temperature is above predetermined level, the ECM will turn on the VSV. Engine vacuum is closed off and atmospheric pressure is applied to the pressure regulator diaphragm. This increases fuel pressure preventing vapor lock. Once the engine is started, the VSV may remain on for about 120 seconds.

Fuel Delivery Components

Fuel Lines And Connectors

Today's vehicles use a variety of materials and connectors for fuel lines. Steel and synthetic materials are used, depending on location and model year. It is critical that the correct procedures be followed when servicing the fuel lines.

Connectors can be the threaded type or the quick connector style.

Styles of Quick Connectors

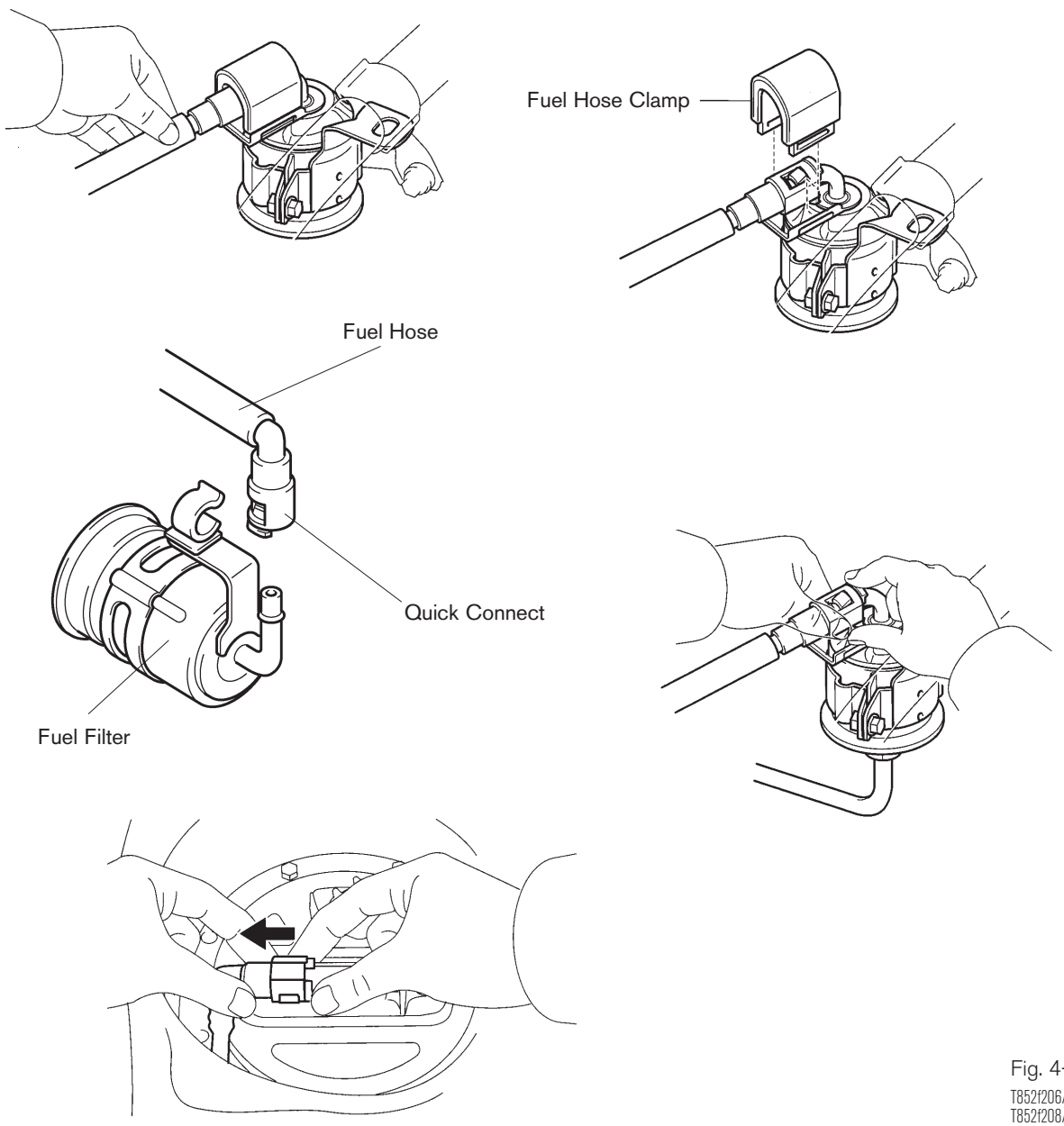

Fig. 4-21
T852f206/T852f207
T852f208/T852f209
T852f210

Fuel Tank

The fuel tank is designed to safely contain the fuel and evaporative emissions. Typically, it houses the fuel pump assembly and rollover protection valves.

Fuel Filters

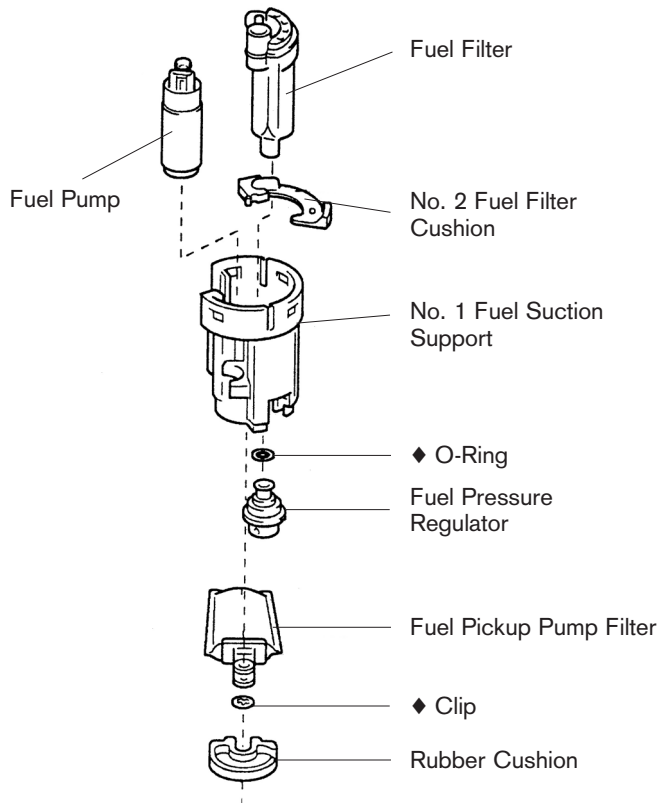

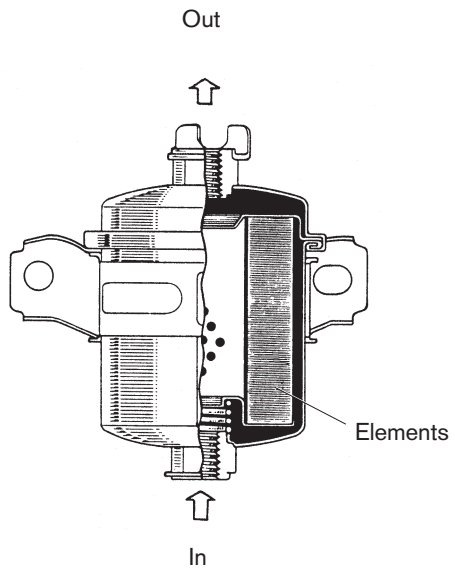

Discharge External Style Fuel Filter

Fig. 4-22

T852f211/T852f212

Fuel Filters

Typically, there are two fuel filters in the fuel delivery system. The first filter is the fuel pump filter located on the suction side of the fuel pump. This filter prevents debris from damaging the fuel pump. The second filter, located between the pump and fuel rail, removes dirt and contaminates from the fuel before it is delivered to the injectors. This filter removes extremely small particles from the fuel, the injectors require extremely clean fuel.

The filter may be located in the fuel tank as part of the fuel pump assembly or outside the tank in the fuel line leading to the fuel rail. The filter is designed to be maintenance-free with no required service replacement.

A restricted fuel filter will prevent fuel from reaching the injectors. Therefore, the engine may be hard starting, surge, or have low power under loads. A completely clogged filter will prevent the engine from starting.

Pulsation Damper

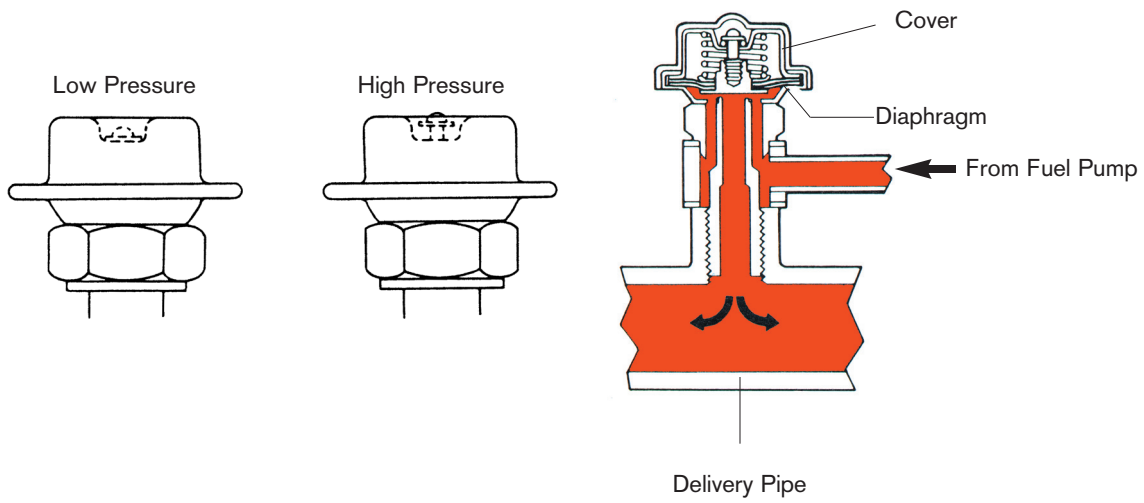

Fig. 4-23
T852f213/T852f214

Pulsation Damper

The rapid opening and closing of the fuel injectors cause pressure fluctuations in the fuel rail. The result is that the amount of injected fuel will be more or less than the desired amount. Mounted on the fuel rail, the pulsation damper reduces these pressure fluctuations. When pressure suddenly begins to increase the spring loaded diaphragm retracts slightly increasing fuel rail volume. This will momentarily prevent fuel pressure from becoming too high. When pressure suddenly begins to drop, the spring loaded diaphragm extends, slightly decreasing effective fuel rail volume. This will momentarily prevent fuel pressure from becoming too low. Not all engines require the use of a pulsation damper.

The screw mounted at the top of the damper provides an easy check for fuel system pressure. When the screw is up it means the fuel rail is pressurized. Under most conditions, this check is adequate. The screw is non-adjustable and it is used to calibrate the damper at the factory.

Fuel Injector

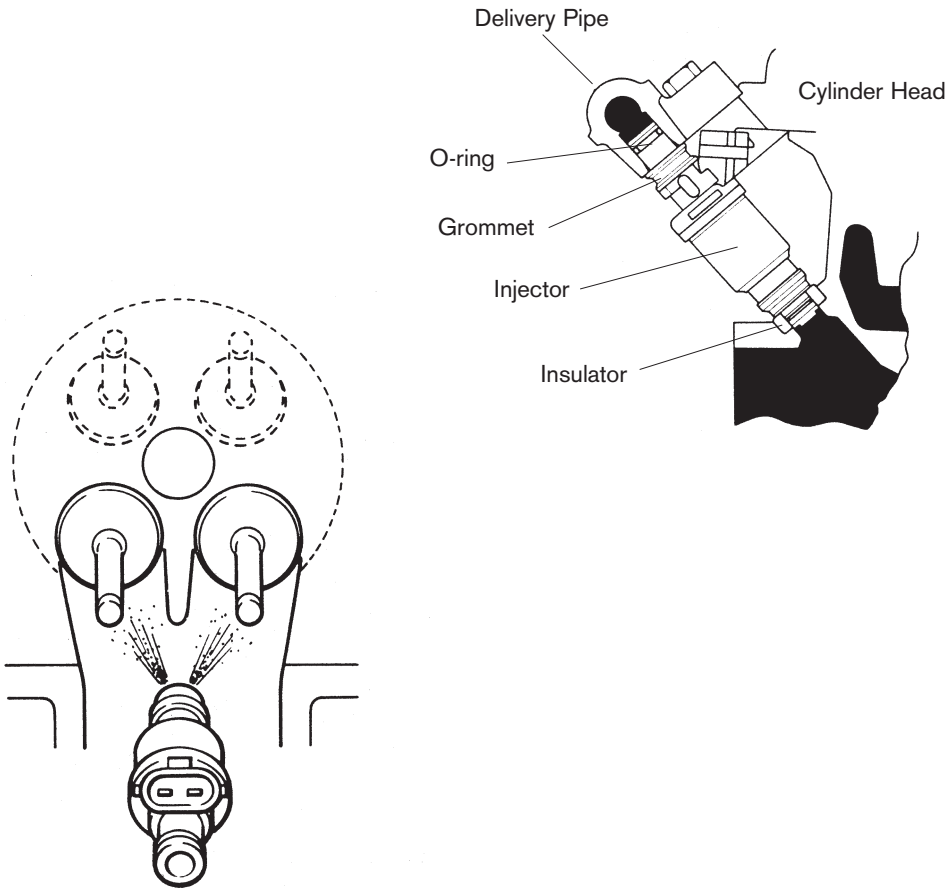

Fig. 4-24
T852f215/T852f216

Fuel Injection Operation

The fuel injector, when turned on by the ECM, atomizes and directs fuel into the intake manifold.

Fuel Injectors

There is one injector per cylinder mounted in the intake manifold before the intake valve(s). The injectors are installed with an insulator/seal on the manifold end to insulate the injector from heat and prevent atmospheric pressure from leaking into the manifold. The fuel delivery pipe secures the injector. An O-ring between the delivery pipe and injector prevents the fuel from leaking.

Different Styles of Fuel Injectors

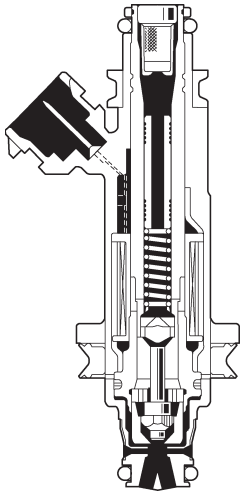

Compact 4 Hole Type

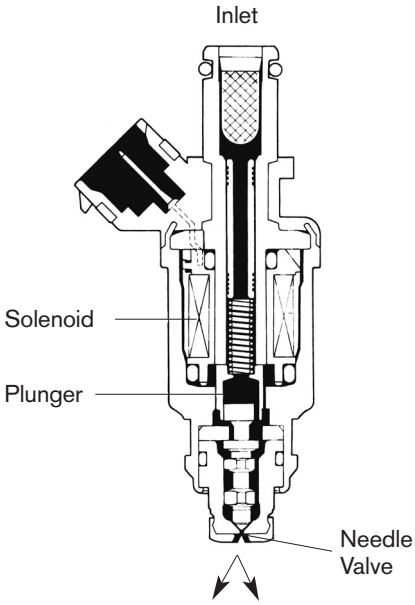

Top Feed Type

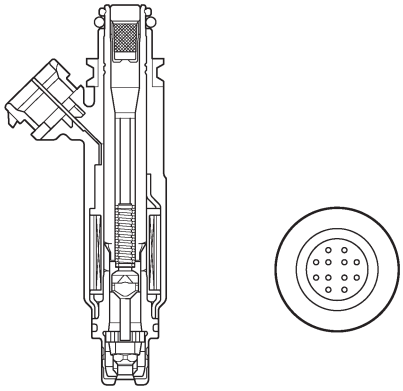

12 Hole Type

Fig. 4-25

T852f217/T852f218
L852f818

Different engines require different injectors. Injectors are designed to pass a specified amount of fuel when opened. In addition, the number of holes at the tip of the injector varies with engines and model years. When replacing an injector it is critical that the correct injector be used.

Air Assist Fuel Injector

The one on the right is for the air assist system. During idle air is directed Into the air gallery. The smaller tubes increase the air velocity and therefore mixes easily with the fuel for better combustion.

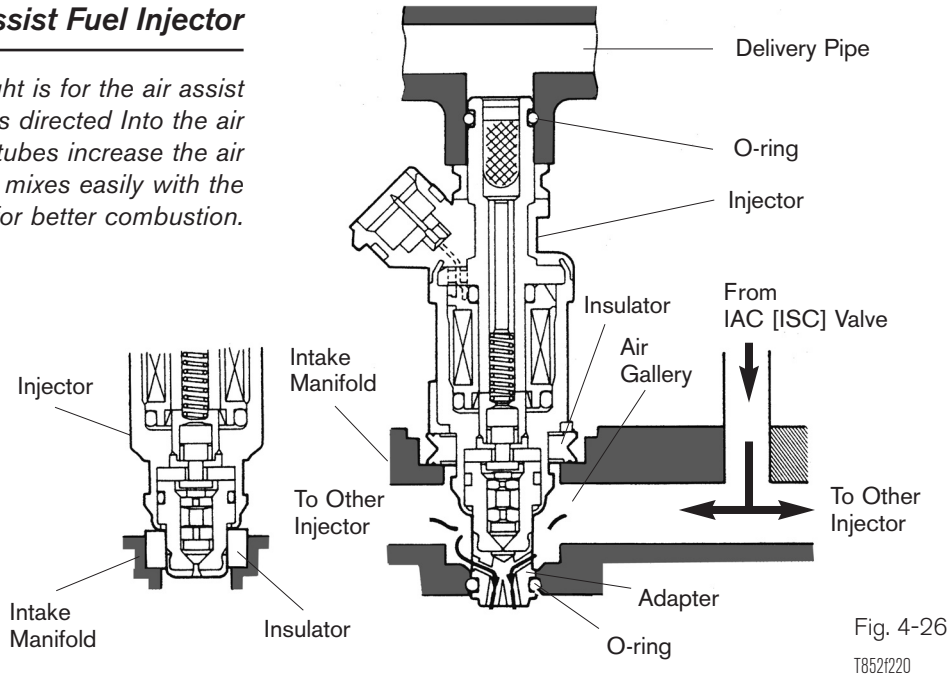

Fig. 4-26

T852f220

Inside the injector is a solenoid and needle valve. The fuel injector circuit is a ground switched circuit. To turn on the injector, the ECM turns on a transistor completing a path to ground. The magnetic field pulls the needle valve up overcoming spring pressure and fuel now flows out of the injector. When the ECM turns off the circuit, spring pressure will force the needle valve onto its seat, shutting off fuel flow.

Grouped Injection

This is one style of grouped injection.

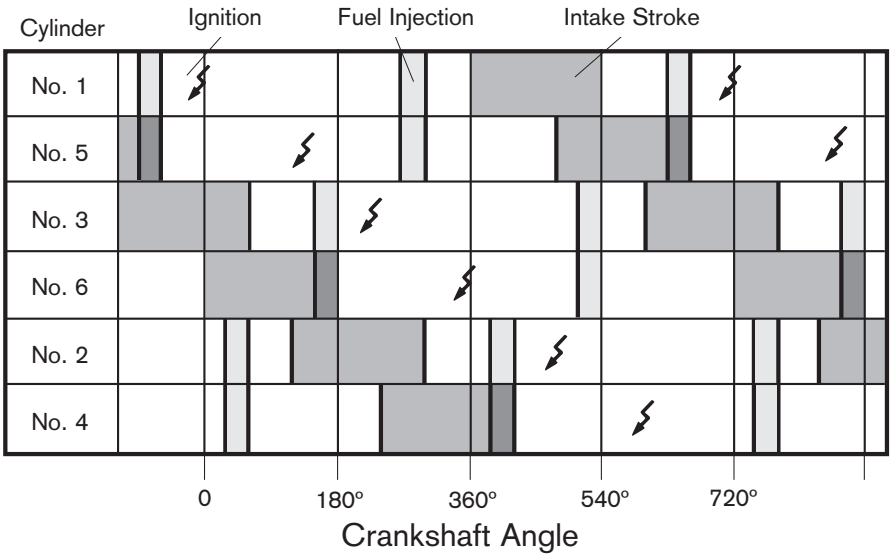

Fig. 4-27

T852f221

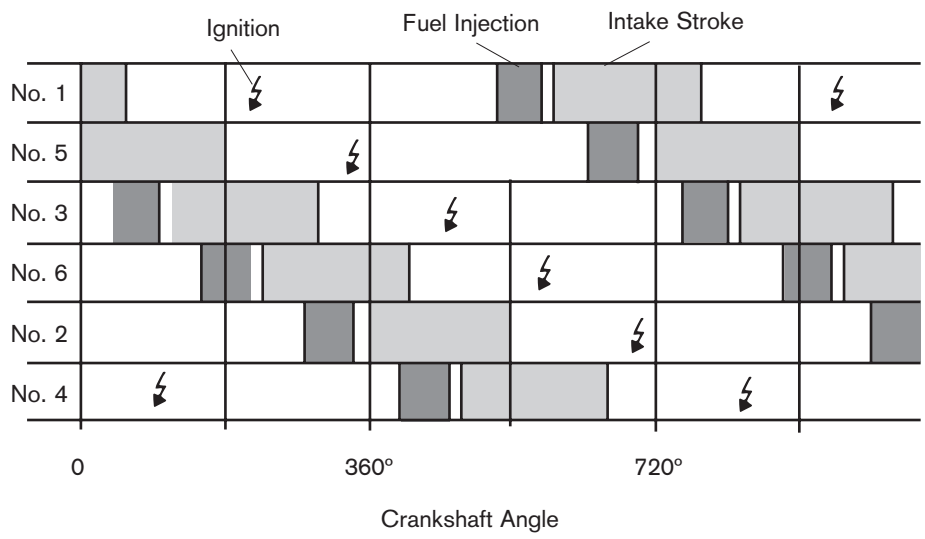

Fig. 4-28
T852f222

Injector Timing/Drive Circuits

The design of the injector drive circuit and ECM programming determines when each injector delivers fuel in relation to the operating cycle of the engine. If the injectors are turned on according to the crankshaft position angle, it is called synchronous injection. That is, the injectors are timed to turn on according to crankshaft position. Depending on engine application, the three main types of synchronous injection designs are: Simultaneous, Grouped, or Sequential. In all these types, voltage is supplied to the injectors from the ignition switch or EFI main relay and the ECM controls injector operation by turning on the driver transistor grounding the injector circuit. Simultaneous and grouped are the oldest styles, and are no longer used.

On simultaneous, all injectors are pulsed at the same time by a common driver circuit. Injection occurs once per engine revolution, just prior to TDC No. 1 cylinder. Twice per engine cycle, one-half of the calculated fuel is delivered by the injectors. With grouped drive circuits, injectors are grouped in combinations. There is a transistor driver for each group of injectors. On sequential drive circuits, each injector is controlled separately and is timed to pulse just before the intake valve opens.

There are times when the ECM needs to inject extra fuel into the engine regardless of crankshaft position and this is called asynchronous injection. Asynchronous injection is when fuel is injected into all cylinders simultaneously when predetermined conditions exist without relation to the crankshaft angle. Two common conditions are starting and acceleration.

NOTE The EWD injector circuit can identify if the injection system is a grouped or sequential system. A sequential system will have one injector per injector driver.

Injector Wave Pattern

Injection duration, when the injector is turned on and off, can be seen on the oscilloscope wave pattern.

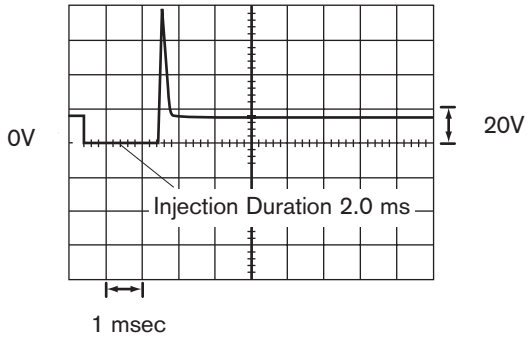

• **Engine running condition: Idling.**

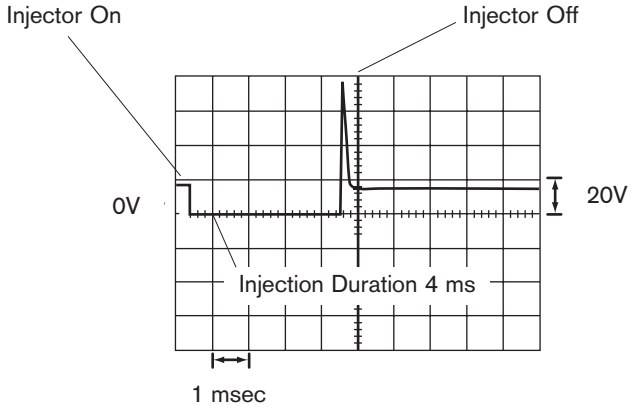

• **Engine running condition: Heavy Load.**

Fig. 4-29

T852f223/T852f224

Fuel Injection Volume Control

The amount of fuel injected depends on fuel system pressure and the length of time the injector is turned on. Fuel system pressure is controlled by the pressure regulator, and injector on time is controlled by the ECM. The time the injector is on is often called duration or pulse width, and it is measured in milliseconds (ms). Cold starting requires the highest pulsewidth. Pulsewidth is dependent primarily on **engine load and engine coolant temperature**. The higher the engine load and the more the throttle is opened to let air in, the pulsewidth increases. The ECM determines the duration based on the input sensor signals, engine conditions, and its programming.

Fuel Injection Duration Control Modes and Corrections

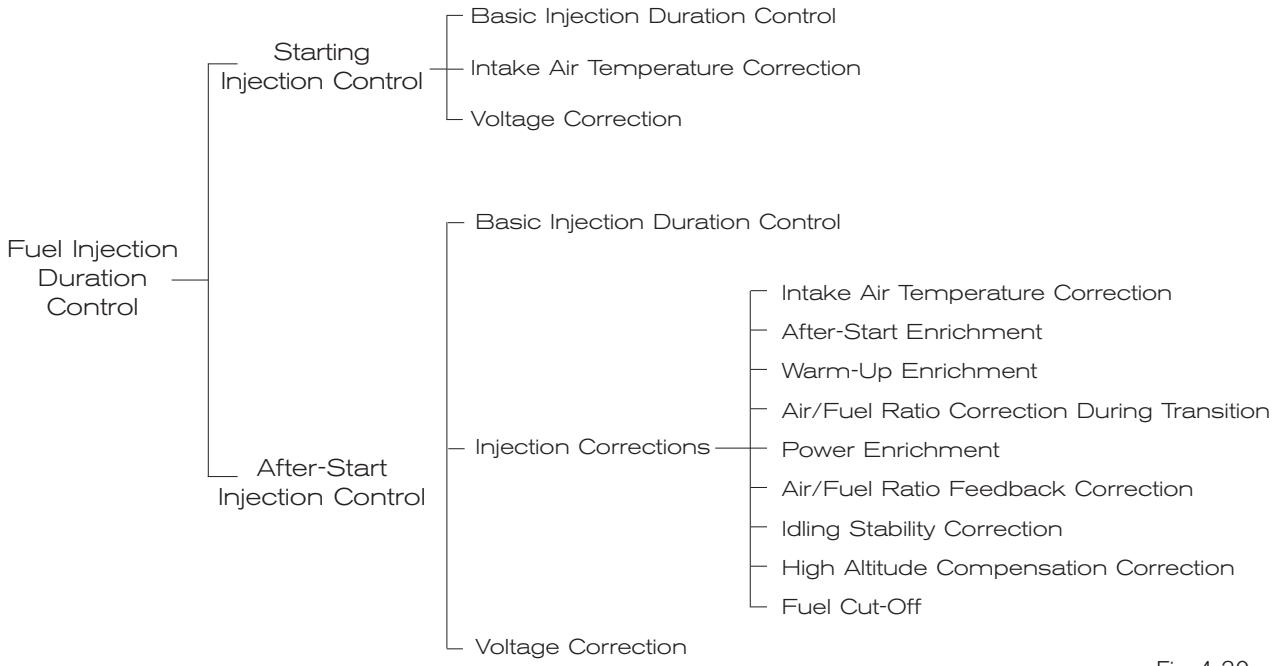

Fig. 4-30

Injection Start Mode

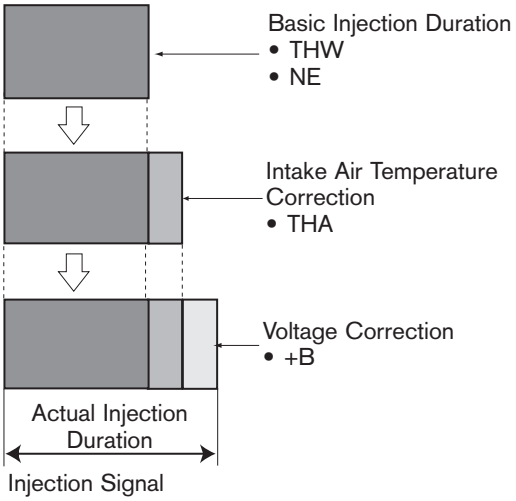

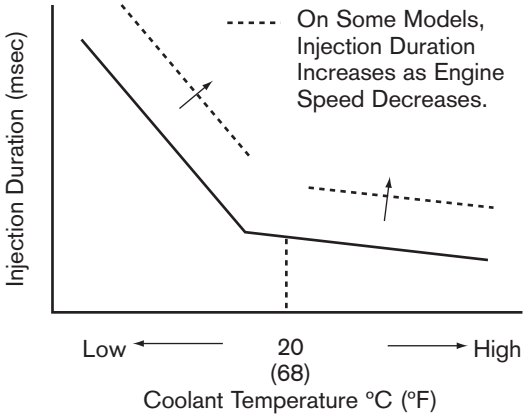

Fig. 4-31

T852f225/T852f226

Start Mode When the ignition switch is in the Start position, the ECM receives a voltage signal at the STA terminal. The ECM determines basic injection duration based on the ECT (THW) signal. On MAP sensor equipped engines the ECM will then modify this duration based on the IAT (THA) signal.

The ECM will adjust the duration based on battery voltage. During cranking, battery voltage is much lower causing the injector valve to lift slowly. The ECM corrects for this by increasing injection duration.

When the ECM receives the NE signal (Crankshaft Position Sensor), all the injectors are turned on simultaneously. This insures there is enough fuel for starting the engine. Note that below freezing, injection duration increases drastically to overcome the poor vaporization characteristics of fuel at these temperatures.

After Start Injection Control Mode

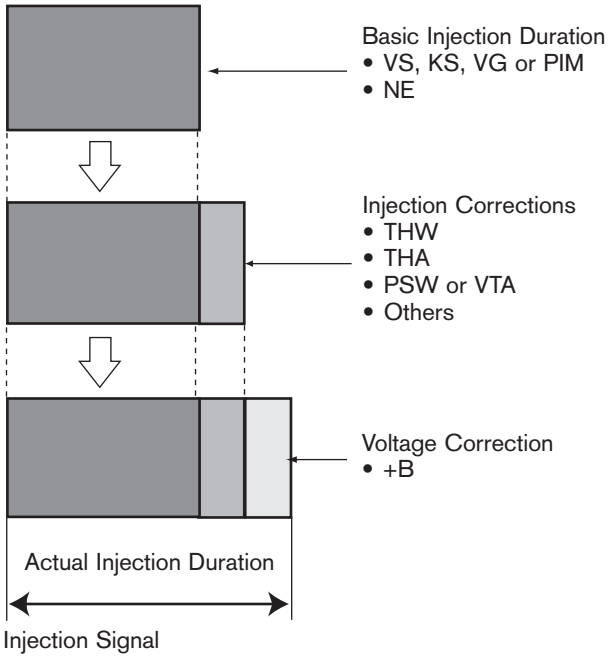

Fig. 4-32
T852f225

Engine Running (After Start) Injection Duration Control

Total fuel injection duration is determined in three basic steps:

- Basic injection duration
- Injection corrections
- Voltage correction

Basic injection duration is based on air volume and engine RPM. Air volume on MAF equipped engines is determined by the MAF voltage signal.

On MAP sensor equipped engines, the ECM calculates air volume based on the PIM signal, engine RPM, THA signal, and volumetric efficiency values stored in the ECM.

Injection corrections adjust the basic injection duration to accommodate different engine modes and operating conditions. It is based on a variety of input signals.

Voltage correction adjusts the injection duration to compensate for differences in the electrical system voltage.

After Start Enrichment & Warm Up Correction

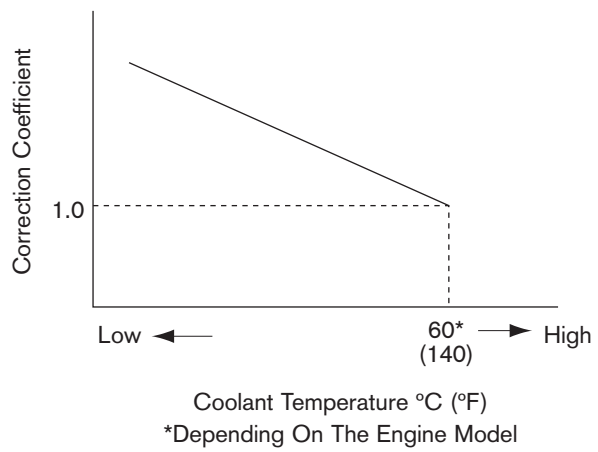

Fig. 4-33
T852f227

After Start Enrichment Immediately after starting (engine speed above a predetermined level), the ECM supplies an extra amount of fuel for a certain period of time to stabilize engine operation.

This correction volume is highest immediately after the engine has started and gradually decreases. The maximum correction volume value is based on engine coolant temperature. The hotter the engine, the less volume of fuel injected.

Warm-Up Enrichment A rich fuel mixture is needed to maintain driveability when the engine is cold. The ECM injects extra fuel based on engine coolant temperature. As the engine coolant warms up, the amount of warm-up enrichment decreases. Depending on the engine, warm-up enrichment will end at approximately 50°C–80°C (122°F–176°F).

If the ECM is in Fail-Safe Mode for DTC P0115, the ECM substitutes a temperature value, usually 80°C (176°F).

Correction Based on Intake Air Temperature (MAP Sensor Equipped Engines)

Lexus does not use a MAP sensor. This is only for reference.

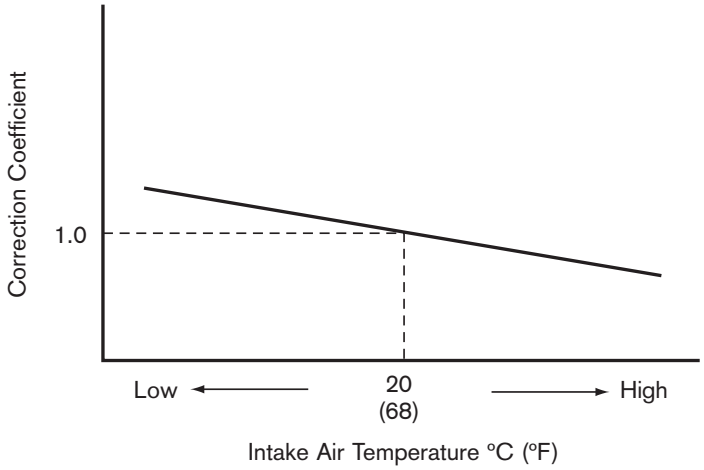

Fig. 4-34

T852f228

Correction Based on Intake Air Temperature (MAP Sensor Equipped Engines)

The density of the intake air decreases as temperature increases. Based on the IAT (THA) signal, the ECM adjusts the fuel injection duration to compensate for the change in air density. The ECM is programmed so that at 20°C (68°F), no correction is needed. Below 20°C (68°F), duration is increased, above 20° (68°F), duration is decreased.

If the ECM is in Fail-Safe Mode for DTC P0110, the ECM substitutes a temperature value of 20°C (68°).

Power Enrichment Correction

When the ECM determines the engine is operating under moderate to heavy loads, the ECM will increase the fuel injection duration. The amount of additional fuel is based on the MAF or MAP sensors, TPS, and engine RPM. As engine load (and air volume) increases, fuel injection duration increases. As engine RPM increases, injection frequency increases at the same rate.

Acceleration Correction

On initial acceleration, the ECM extends the injection duration richening the mixture to prevent a stumble or hesitation. The duration will depend on how far the throttle valve travels and engine load. The greater the throttle travel and engine load, the longer the injection duration.

Deceleration Fuel Cut

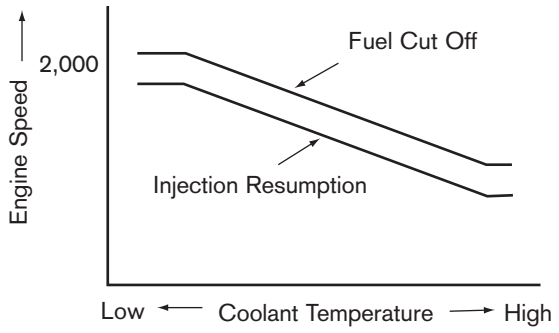

Fig. 4-35
T852f229

Deceleration Fuel Cut

During closed throttle deceleration periods from moderate to high engine speeds, fuel delivery is not necessary or desirable. To prevent excessive decel emissions and improve fuel economy, the ECM will not open the injectors under certain decel conditions. The ECM will resume fuel injection at a calculated RPM.

Referring to the graph, fuel cut-off and resumption speeds are variable, depending on coolant temperature, A/C clutch status, and the STA signal. Essentially, when extra engine loads are present, the ECM will begin fuel injection earlier.

Fuel Tau Cut is a mode employed on some engines during long deceleration time with the throttle valve closed. During these times, excess oxygen would enter the catalytic converter. To prevent this, the ECM will very briefly pulse the injectors.

Engine Over-Rev Fuel Cutoff

To prevent engine damage, a rev-limiter is programmed into the ECM. Any time the engine RPM exceeds the pre-programmed threshold, the ECM shuts off the injectors. Once RPM falls below the threshold, the injectors are turned back on. Typically, the threshold RPM is slightly above the engine's redline RPM.

Vehicle Over-Speed Fuel Cutoff

On some vehicles, fuel injection is halted if the vehicle speed exceeds a predetermined threshold programmed into the ECM. Fuel injection resumes after the speed drops below this threshold.

Battery Voltage Correction

With lower battery voltage, a longer injector ON time is needed.

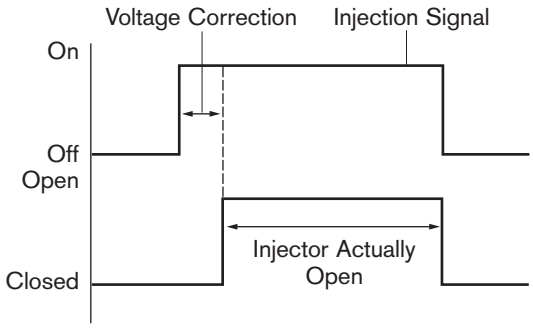

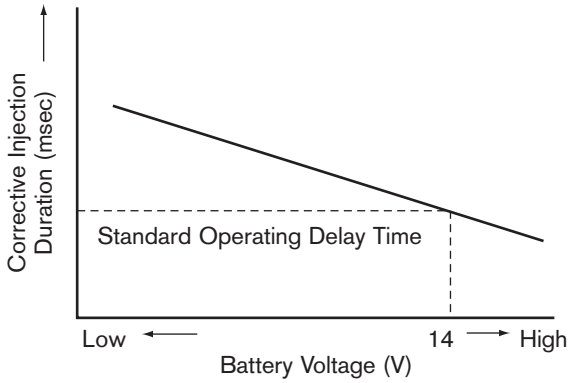

Fig. 4-36

T852f230/T852f231

Battery Voltage Correction

The applied voltage to the fuel injector will affect when the injector opens and the rate of opening. The ECM monitors vehicle system voltage and will change the injection on time signal to compensate. If system voltage is low, the injection on time signal will be longer, but the actual time the injector is open will remain the same (if system voltage were higher).

High Altitude Compensation

To compensate for less air at higher altitudes, fuel injection duration is decreased.

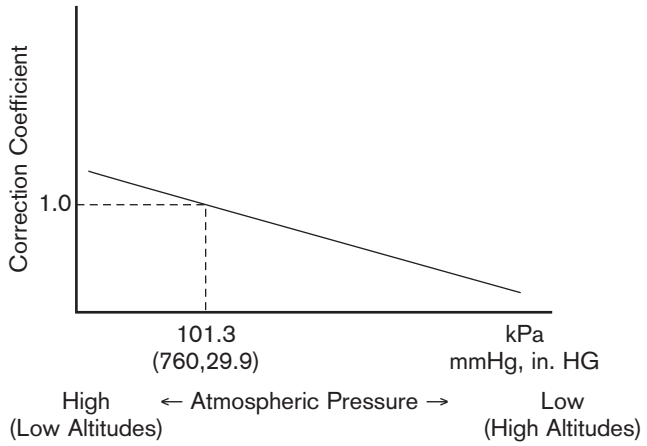

Fig. 4-37
T852f232

EVAP Purge Compensation

When the evaporative purge valve is on, fumes from the charcoal canister are drawn into the intake manifold. The ECM will compensate based on the oxygen sensor output and shorten the injector pulse width.

Closed Loop Systems

A system that controls its output by monitoring its output is said to be a closed loop system. An example of a closed loop system is the vehicle's charging system. The voltage regulator adjusts the voltage output of the alternator by monitoring alternator voltage output. If voltage is too low, the voltage regulator will increase alternator output. Without the voltage regulator, alternator output could not be adjusted to match the electrical loads. Many systems are closed loop systems. Some other examples are: cruise control, ignition system knock control, idle speed control, and closed loop air/fuel ratio correction control. When the ECM corrects the air/fuel ratio based on the oxygen or air/fuel ratio sensor, the system is said to be in closed loop.

Open Loop Systems

An open loop system does not monitor its output and make adjustments based on its output. The temperature control in a vehicle not equipped with automatic air conditioning serves as an example.

Closed Loop Fuel Control

The ECM needs to monitor the exhaust stream and adjust the air/fuel ratio so that the catalytic converter will operate at peak efficiency, reducing regulated emission gases. Measuring the amount of oxygen remaining after combustion is a means to indicate the air/fuel ratio. A richer mix-

ture will consume more oxygen during combustion than a leaner mixture. The oxygen sensor or air/fuel ratio sensor measures the amount of oxygen remaining after combustion in the exhaust stream. From this information, the ECM will control the injection duration to achieve the desired, ideal air/fuel ratio of 14.7:1. This is necessary so the catalytic converter will operate at peak efficiency.

NOTE The engine operation often requires different air/fuel ratios for starting, maximum power, and maximum fuel economy. The 14.7:1 ratio is for catalytic converter efficiency.

Stoichiometry and Catalyst Efficiency

Catalytic converter efficiency is nearly 100% when the air/fuel ratio is approximately 14.7:1.

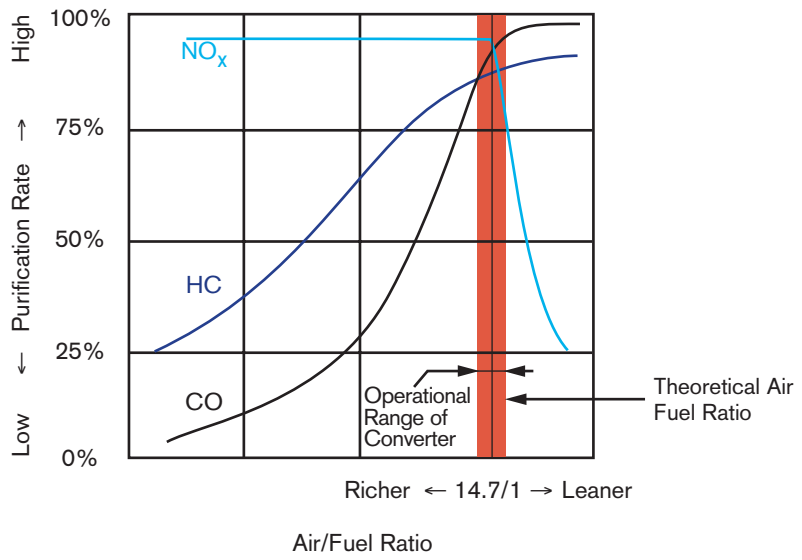

Fig. 4-38

T852f233

Stoichiometry and Catalyst Efficiency

For the catalytic converter to operate at peak efficiency, the air/fuel ratio must be at the ideal stoichiometric ratio of 14.7 parts air to one part fuel as measured by weight. This why the ECM tries to maintain a 14.7 to 1 ratio whenever possible.

Open Loop Mode

When in open loop, the ECM does not use the oxygen sensor or A/F sensor to adjust the injector duration.

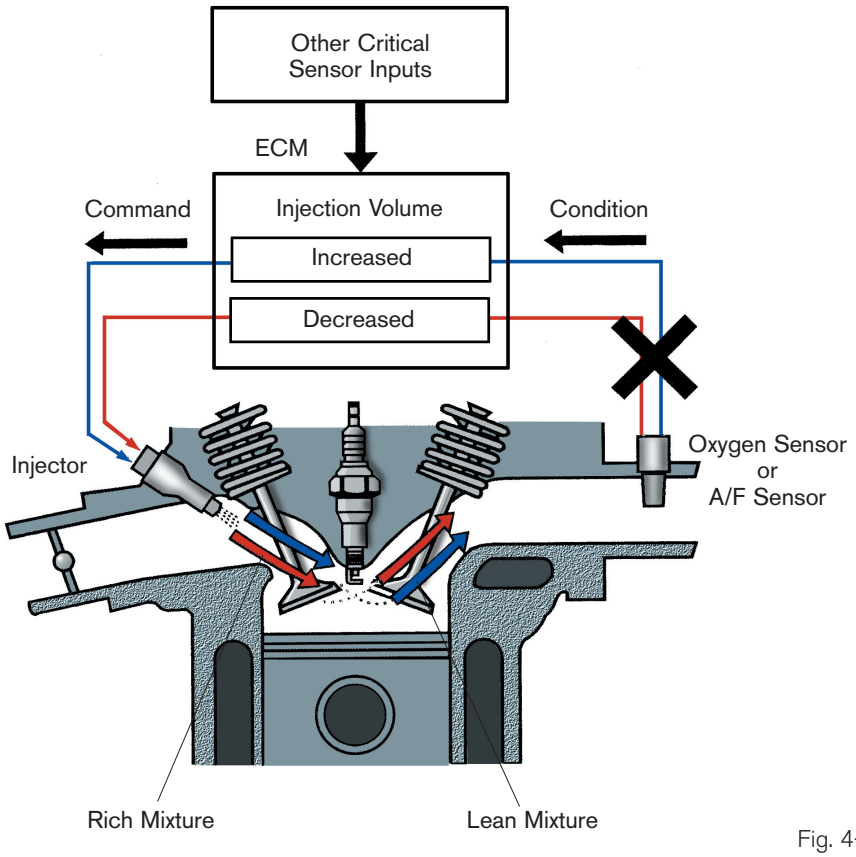

Fig. 4-39

T852f234

Open Loop Mode The ECM will be in open loop mode when:

- starting the engine
- the engine is cold
- hard acceleration
- during fuel cut-off
- wide open throttle

If the engine will not go into closed loop mode, the problem may be insufficient engine temperature, no response from the oxygen sensor or air/fuel sensor, or the heater circuit is inoperative. Usually, no response from the oxygen or A/F sensor will set DTC P0125.

If there is a driveability problem only in closed loop, anything that disrupts air/fuel ratio, the oxygen or A/F sensor circuit may be the cause.

Closed Loop Fuel Control

Now, the ECM will adjust injector duration using the oxygen sensor or A/F sensor signal.

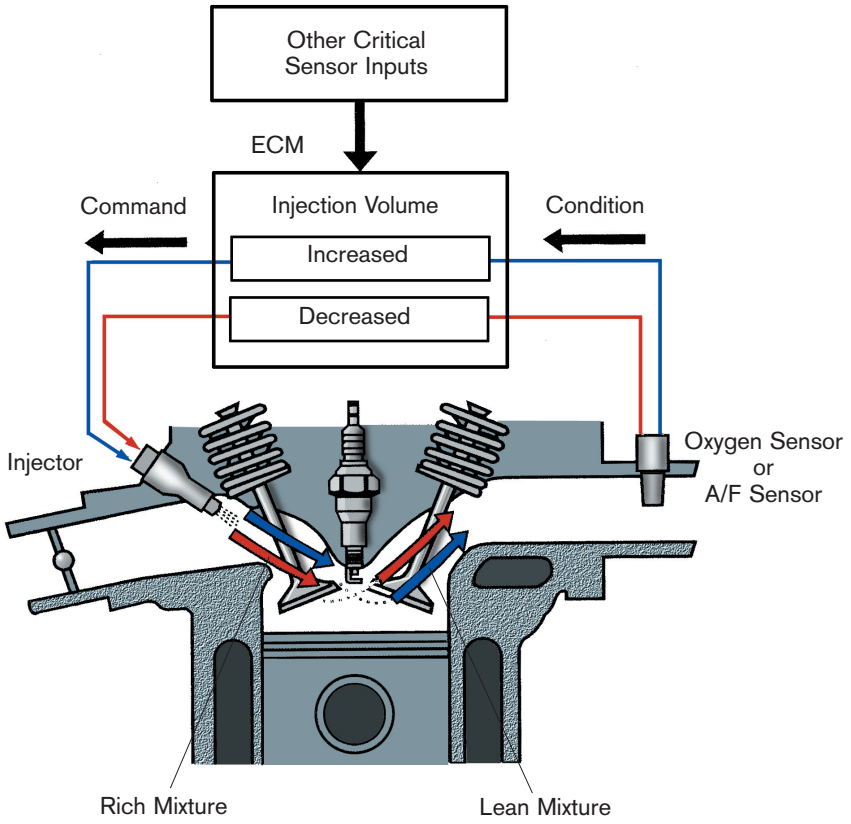

Fig. 4-40
T852f235

Closed Loop Operation/Oxygen Sensor

When in closed loop, the ECM uses the oxygen sensor voltage signal to make minor corrections to the injection duration. This is done to help the catalytic converter operate at peak efficiency.

When the voltage is higher than 450 mV, the air/fuel ratio is judged to be richer than the ideal air/fuel ratio and the amount of fuel injected is reduced at a constant rate. The reduction in the duration continues until the oxygen sensor signal switches to a low voltage (lean air/fuel ratio).

Exhaust Oxygen Content	Oxygen Sensor Output	Air/Fuel Mixture Judged To Be:
Low →	High, Above 0.45 volts →	Rich
High →	Low, Below 0.45 volts →	lean

When the voltage signal is lower than 450 mV, the air/fuel ratio is judged to be leaner than the ideal air/fuel ratio so the amount of fuel injected is increased at a constant rate. The increase in duration continues until the oxygen sensor switches to high voltage (rich air/fuel ratio). At this point, the ECM will slowly decrease the amount of fuel, therefore the air/fuel ratio oscillates slightly richer or leaner from the ideal air/fuel ratio. The result is an average of approximately 14.7:1. This produces the proper mixture of exhaust gases so that the catalytic converter operates at its most efficient level.

The frequency of this rich/lean cycle depends on exhaust flow volume (engine RPM and load), the oxygen sensor response time, and the fuel control programming. At idle, exhaust flow volume is low, and the switching frequency of the oxygen sensor is low. As engine speed increases, the switching frequency of the oxygen sensor increases, generally eight or more times at 2,500 RPM in ten seconds.

Closed Loop Operation Air/Fuel Sensor

With an A/F sensor, air/fuel mixture correction is faster and more precise. An oxygen sensor signal voltage abruptly changes at the ideal A/F ratio and changes very little as the air/fuel ratio extends beyond the ideal ratio. This makes fuel control less precise, for the ECM must gradually and in steps change the injection duration until the oxygen sensor signal abruptly switches.

By contrast, the A/F sensor outputs a voltage signal that is relatively proportional to the A/F ratio. The ECM now knows how much the A/F ratio has deviated from the ideal, and thus, the fuel control program can immediately adjust the fuel injection duration. This rapid correction reduces emission levels because the ECM can more accurately maintain the ideal air/fuel ratio for the best catalytic converter efficiency.

Therefore, when observing A/F sensor voltage output, the output is relatively constant because there is no cycling between rich and lean.

Fuel Trim

As the engine and sensors change over time, the ECM needs a method to adjust the injection duration for improved driveability and emission performance. Fuel trim is a program in the ECM designed to compensate for these changes.

When in closed loop, the ECM modifies the final injection duration based on the oxygen sensor. These minor corrections are needed to maintain the correct air/fuel ratio. However, if more correction than normal (as determined by the ECM) is needed, the ECM will use the fuel trim strategy to compensate. Fuel trim allows the ECM to learn and adjust the injection

duration quickly by reducing the correction time back to normal. This means that driveability and performance will not suffer.

Fuel trim can be observed on the Diagnostic Tester as a percentage. A positive percentage means that the ECM has increased the duration and a negative percentage means the ECM has decreased the duration.

There are two different fuel trim values that affect final injection duration and can be observed by the technician; short term fuel trim (SHORT FT) and long term fuel trim (LONG FT). SHORT FT is a temporary addition or subtraction to the basic injection duration. LONG FT is part of the basic injection duration calculation and it is stored in the ECM's memory.

SHORT FT

SHORT FT is based on the oxygen sensor, and therefore, it only functions in closed loop. SHORT FT responds rapidly to changes in the oxygen sensor. If SHORT FT is varying close to 0%, little or no correction is needed. When SHORT FT percentage is positive, the ECM has added fuel by increasing the duration. A negative percentage means the ECM has subtracted fuel by decreasing the duration. The SHORT FT value is temporary and not stored when the ignition key is turned off.

SHORT FT is used to modify the long term fuel trim. When the SHORT FT remains higher or lower longer than expected, the ECM will add or subtract this value to the LONG FT.

LONG FT

LONG FT is stored in memory because it is part of the basic injection duration calculation. The ECM uses the SHORT FT to modify the LONG FT. The LONG FT does not react rapidly to sudden changes, it only changes when the ECM decides to use the SHORT FT value to modify the LONG FT. LONG FT is stored in the ECM's memory and it is not erased when the ignition key is turned off. Because LONG FT is part of the basic injection duration, it affects injection duration in closed and open loop. Like the SHORT FT, when LONG FT is at 0% there has been no modification to the basic injection duration. A positive percentage means the ECM is adding fuel; a negative percentage, subtracting fuel.

Fuel System Monitor

The fuel system monitor is designed to set a DTC if the fuel injection system is going to exceed emission standards. This monitor uses the fuel trim correction levels for detection. The amount of fuel trim correction that will set a DTC varies with each engine type and model year.

Cold Start Injector and Time Switch

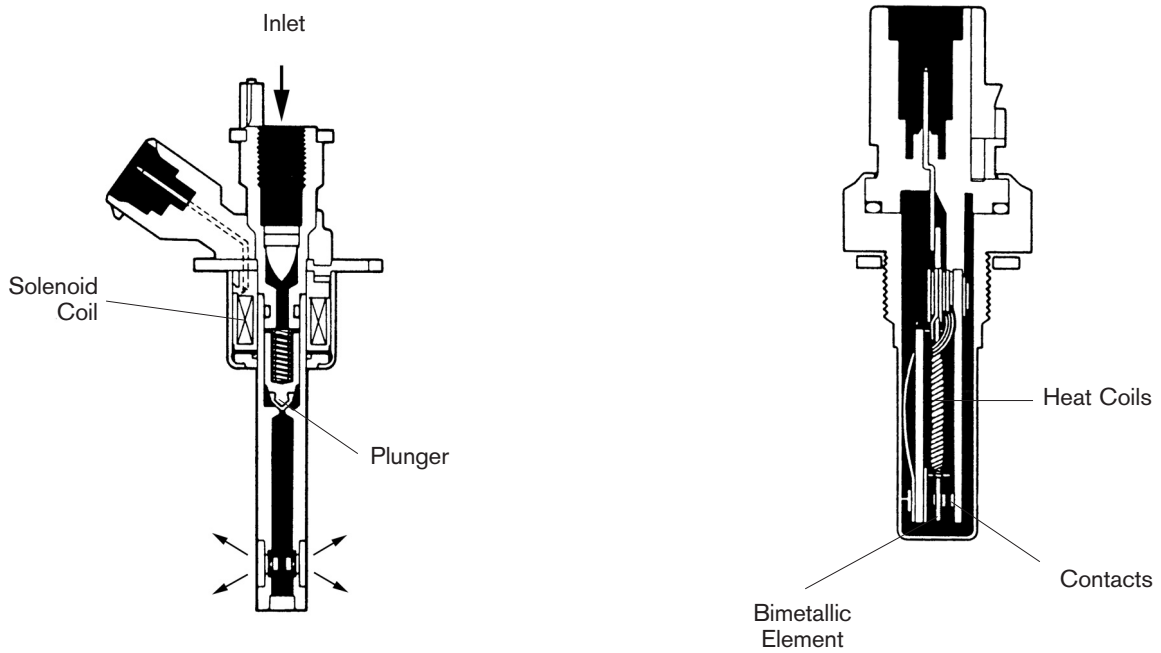

Injector **Time Switch**

Fig. 4-41

T852f236/T852f237

Cold Start Injector System

Cold start injector systems are no longer used, but they were very common for many years. The function of the cold start injector is to maintain engine startability when the engine is cold. This injector operates only during cranking when the coolant temperature is low. The function of the start injector time switch is to control the maximum injection duration of the cold start injector.

Non-ECM Controlled Cold Start Timer Circuit

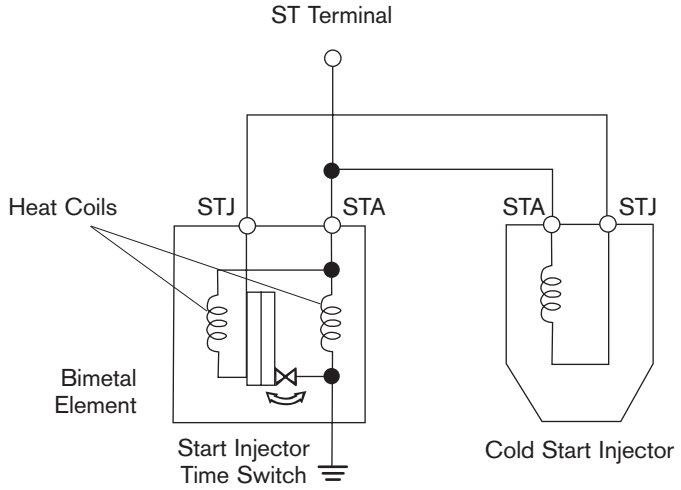

Fig. 4-42
T852f238

Non-ECM Controlled Cold Start Circuit

When the engine is cranked while the engine coolant temperature is low, the duration of cold start injector operation is controlled by the start injector time switch. When the bimetal contacts are closed, current flows through the cold start injector. Simultaneously, current is flowing through the heat coils. Heat will flex the bimetal element opening the contacts. The length of time depends on engine temperature.

Cold Start Injector Duration

Duration is determined by engine coolant temperature. ON or OFF depending on engine model.

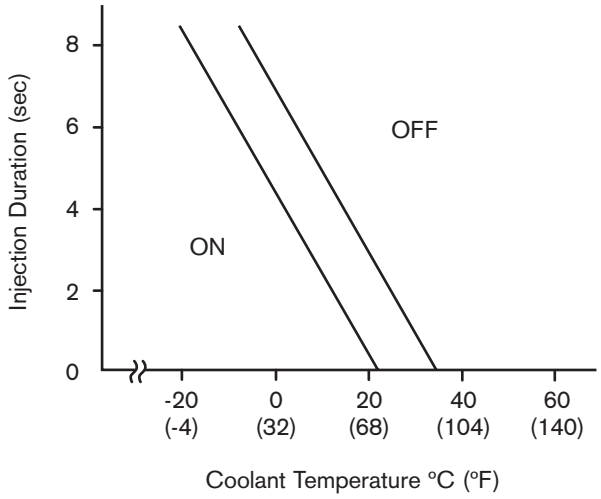

Fig. 4-43
T852f239

Callout

ECM Controlled Cold Start Injector System

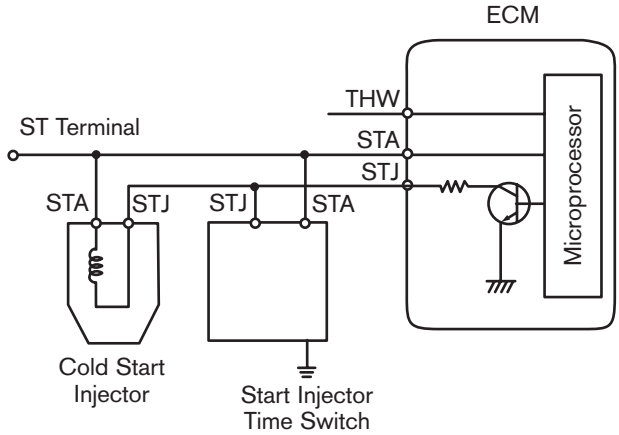

Fig. 4-44

T852f2240

ECM Controlled Cold Start Injector System

In order to improve startability when the engine is cold, the injection duration of the cold start injector is controlled not only by the injector time switch but also by the ECM in accordance with the coolant temperature.

ECM and Injector Time Switch

Control of the injection duration of the cold start injector continues to be carried out by the start injector time switch, as shown by shaded area A, but control is also exercised by the ECM, as shown by shaded area B.

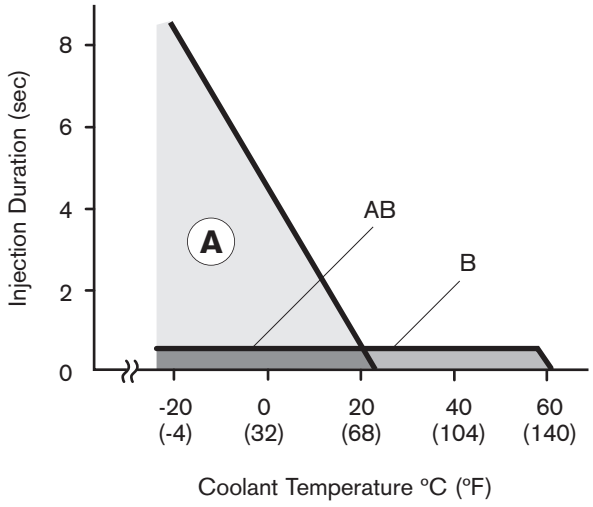

A: Controlled By Start Injector Time Switch
B: Controlled By ECM
A,B: Controlled By Start Injector Time Switch and ECM

Fig. 4-45

T852f241

Notes

WORKSHEET 4–1
Fuel Delivery System

Vehicle	Year/Prod. Date	Engine	Transmission

Technician Objectives

With this worksheet, you will learn to test fuel delivery systems using the required tools and equipment, retrieve and apply the needed service information, retrieve and interpret service data information.

Tools and Equipment

- Vehicle Repair Manual
- Vehicle EWD
- Diagnostic Tester
- Hand Tool Set

Section 1

Testing Fuel Delivery System

1. Using a copy of the EWD/RM electrical circuit for the fuel pump, trace the power flow with a marker. Use orange for power side, green/yellow for ground.

   _____

2. What relay activates the fuel pump?

   _____

3. Is the relay supply side or ground side switched?

   _____

4. What fuse(s) feed the fuel pump circuit?

   _____

Section 2

1. According to the Repair Manual, use Active Test on the DT to operate the fuel pump. What component can be used to indicate fuel pressure?

   _____

2. How could the fuel pump be operated without the DT?

   _____

3. What is the recommended method for depressurizing the system?

   _____

Section 3

1. On three speed fuel pumps, what signal does the ECM use to vary fuel pump speed? What is the voltage signal level for low, medium, and high?

_____

Section 4

Using the Repair Manual and Technician Handbook, answer the following questions.

1. A disconnected hose on a vacuum modulated pressure regulator will cause fuel pressure to:

_____

2. If the fuel has no residual fuel pressure, list three possible causes.

_____

3. If fuel pressure is too high, list two possible causes:

_____

4. List four causes of low fuel pressure.

_____

_____

5. If there is no fuel pressure, list six possible causes for this condition.

_____

_____

_____

6. List five symptoms lower than normal fuel pressure will have on driveability.

_____

_____

Fuel Delivery System

Name _____ Date _____

Review this sheet as you are doing the worksheet. Check each category after completing the worksheet and instructor presentation. Ask the instructor if you have questions. The comments section is for you to write where to find the information, questions, etc.

Topic	*I have questions*	*I know I can*	Comment
Locate components in the fuel delivery system using the EWD and RM			
Find wire colors, pin numbers in the fuel delivery electrical circuits using the EWD and RM			
Locate the Fuel Pump status in the Data List and compare to specifications to determine condition			
Activate fuel pump with Active Test			
Activate fuel pump using test leads			
Test fuel pump and compare to specifications to determine condition			
Test fuel system pressure and compare to specifications to determine condition			
Test fuel pump relay/ECU and compare to specifications to determine condition			
Check and retrieve relevant DTCs			
Properly disconnect and reconnect fuel lines			
Locate in the RM three sections related to fuel delivery system concerns			

Notes

WORKSHEET 4–2
Fuel Injector Systems

Vehicle	Year/Prod. Date	Engine	Transmission

Technician Objectives

With this worksheet, you will learn to test fuel injection systems using the required tools and equipment, retrieve and apply the needed service information, retrieve and interpret service data information.

Tools and Equipment

- Vehicle Repair Manual & EWD
- Diagnostic Tester & Noid Light
- Hand Tool Set
- Vehicle

Section 1

1. Connect a DT to a vehicle, measure injector pulsewidth and MAF output with DT using Data List.

Diagnostic Tester	Pulsewidth at Idle	2000 RPM	In Drive at Idle (prk brk set, foot on brake)	In Drive at 1500 RPM (prk brk set, foot on brake)
Fuel Injector Pulsewidth				
MAF Output				

2. Compare MAF output to injector pulsewidth. What is your conclusion?

_____

Section 2

1. According to the Repair Manual, display the injector waveform on the oscilloscope.

_____

2. Does the waveform match the Repair Manual waveform?

_____

3. Draw or print the waveform.

IDLE

In Drive at 1500 RPM (prkbrkset, foot on brake)

4. Identify from the waveform the injector ON time and when the injector is turned OFF.

_____

Section 3

1. Connect a noid light. Crank the engine. What did the noid light do?

_____

2. Disconnect the crank sensor. Crank the engine. What did the noid light do? Why?

_____

3. Measure injector coil resistance? specifications

_____

4. An open injector coil may set DTC

_____.

Section 4

1. List five symptoms a failed injector will have on driveability.

_____

_____

Fuel Injector Systems

Name _____ Date _____

Review this sheet as you are doing the worksheet. Check each category after completing the worksheet and instructor presentation. Ask the instructor if you have questions. The comments section is for you to write where to find the information, questions, etc.

Topic	*I have questions*	*I know I can*	Comment
Locate components in the fuel injection system using the EWD and RM			
Find wire colors, pin numbers in the fuel injection electrical circuits using the EWD and RM			
Locate the Injector on time in the Data List and compare to specifications to determine condition			
Measure injector pulsewidth with DT			
Examine injector pattern with oscilloscope			
Test injector coil resistance and compare to specifications to determine condition			
Check and retrieve relevant DTCs			
Properly remove and install fuel injectors			
Locate in the RM three sections related to fuel injection system concerns			

Notes

Evaporative Emission Control Systems

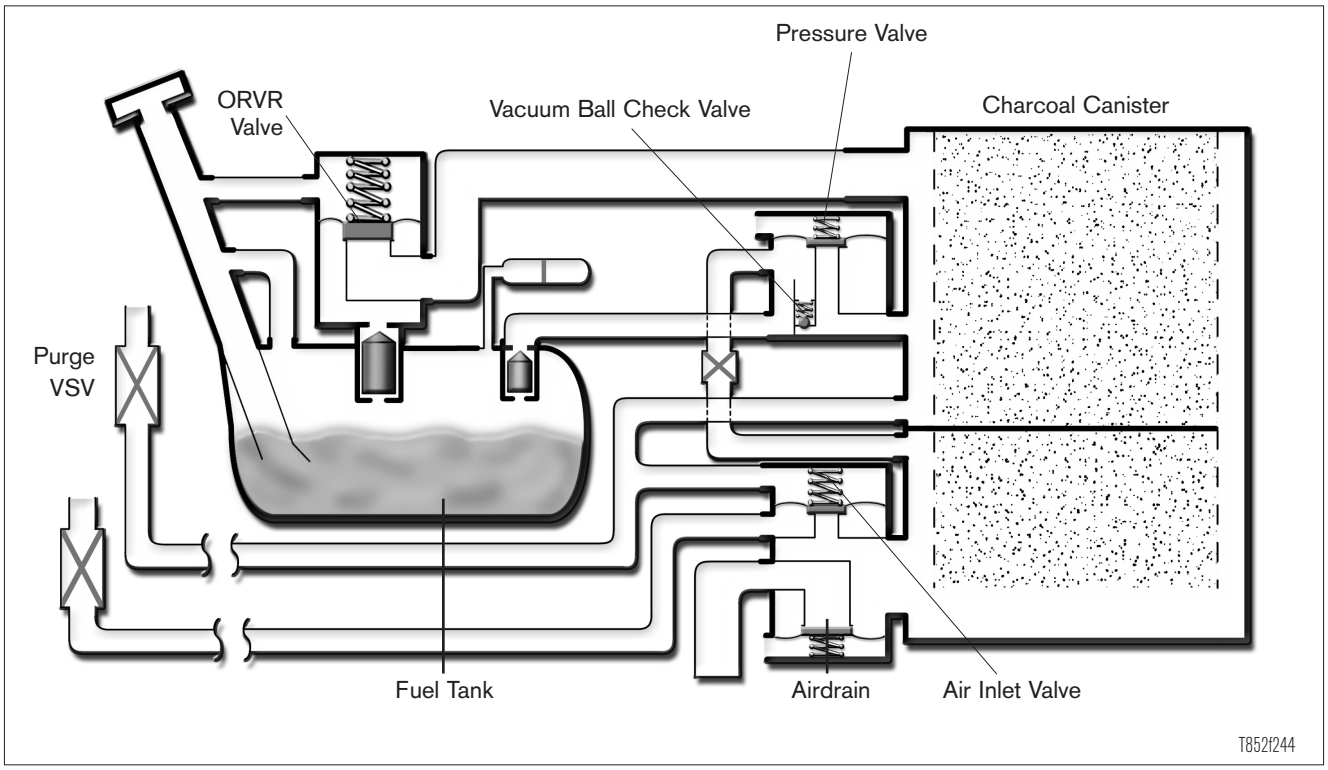

Lesson Objectives

1. Determine the condition of the EVAP system operation based on engine data
2. Determine the condition of the EGR system based on engine data
3. Determine the root cause of a failure(s) in the EGR system using appropriate diagnostic procedures

Notes

EMISSION SYSTEMS

Evaporative Emissions Control Systems

Approximately 20% of all hydrocarbon (HC) emissions from the automobile originate from evaporative sources. The Evaporative Emission Control (EVAP) system is designed to store and dispose of fuel vapors normally created in the fuel system and prevent their escape to the atmosphere.

The EVAP system is a fully closed system designed to maintain stable fuel tank pressures without allowing fuel vapors to escape to the atmosphere. Fuel vapor is normally created as fuel temperature rises. It is then transferred to the EVAP system charcoal canister as tank vapor increases. When the engine can tolerate additional enrichment, these stored fuel vapors are purged into the intake manifold and added to the incoming air/fuel mixture.

There are two basic types of evaporative emission control systems: **Non-ECM controlled EVAP systems** use solely mechanical control devices to collect and purge stored fuel vapors. Typically, these systems use a ported vacuum purge port and a Thermo Vacuum Valve (TVV) to prohibit cold engine operation.

ECM controlled EVAP systems use a manifold vacuum purge source in conjunction with a duty cycled Vacuum Switching Valve (VSV). This type of EVAP system has the ability to provide more precise control of purge flow volume and inhibit operation. This is the only type on current models.

Non-ECM Controlled EVAP System

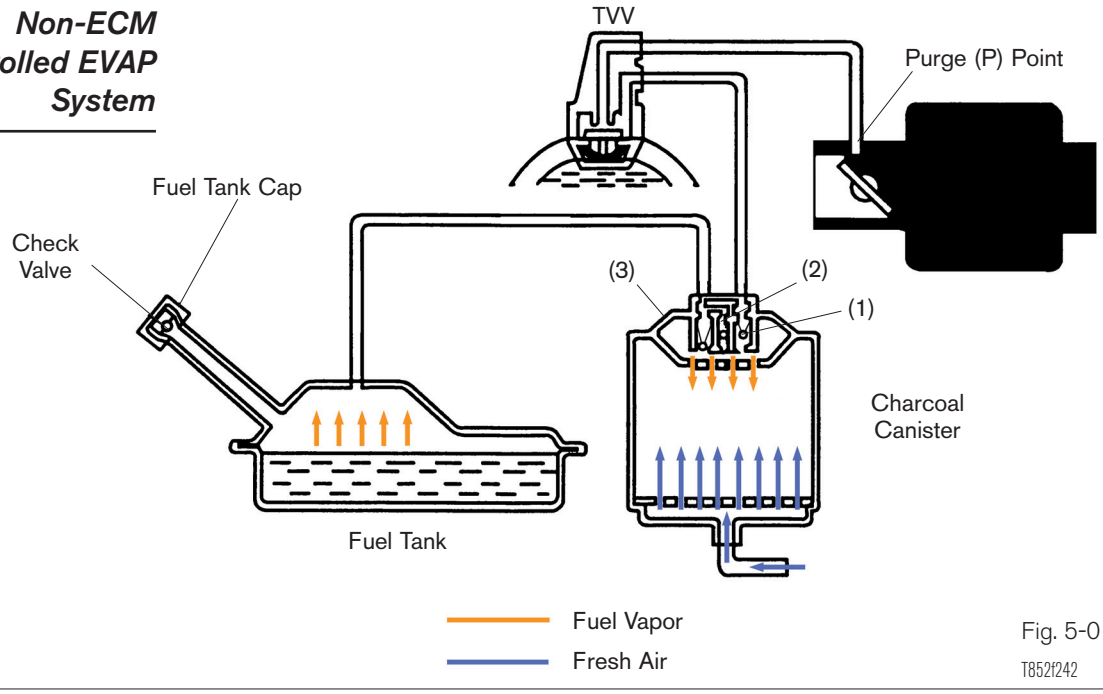

Fig. 5-01
T852f242

Non-ECM Controlled EVAP Systems

Non-ECM controlled EVAP systems typically use the following components:

- Fuel tank
- Fuel tank cap (with vacuum check valve)
- Charcoal canister (with vacuum & pressure check valves)
- Thermo Vacuum Valve (TVV)
- Ported vacuum purge port (port P; on throttle body)

Under some conditions, the fuel tank operates under a slight pressure to reduce the possibility of pump cavitation due to fuel vaporization. Pressure is created by unused fuel returning to the tank and is maintained by check valve No. 2 in the charcoal canister and the check valve in the fuel tank cap.

Under other conditions; as fuel is drawn from the tank, a vacuum can be created in the tank causing it to collapse. This is prevented by allowing atmospheric pressure to enter the tank through check valve No. 3 in the charcoal canister or the fuel tank cap check valve. The EVAP system is designed to limit maximum vacuum and pressure in the fuel tank in this manner.

When the engine is running, stored fuel vapors are purged from the canister whenever the throttle has opened past the purge port (port P) and coolant temperature is above a certain point (usually around 54°C (129°F)). Fuel vapors flow from the high pressure area in the canister, past check valve No.1 in the canister, through the Thermo Vacuum Valve (TVV), to the low pressure area in the throttle body. Atmospheric pressure is allowed into the canister through a filter located on the bottom of the canister. This ensures that purge flow is constantly maintained whenever purge vacuum is applied to the canister. When coolant temperature falls below a certain point–usually around 35°C (95°F), the TVV prevents purge from taking place by blocking the vacuum signal to check valve No.1.

ECM Controlled EVAP System

The Purge VSV is duty ratio controlled by the ECM.

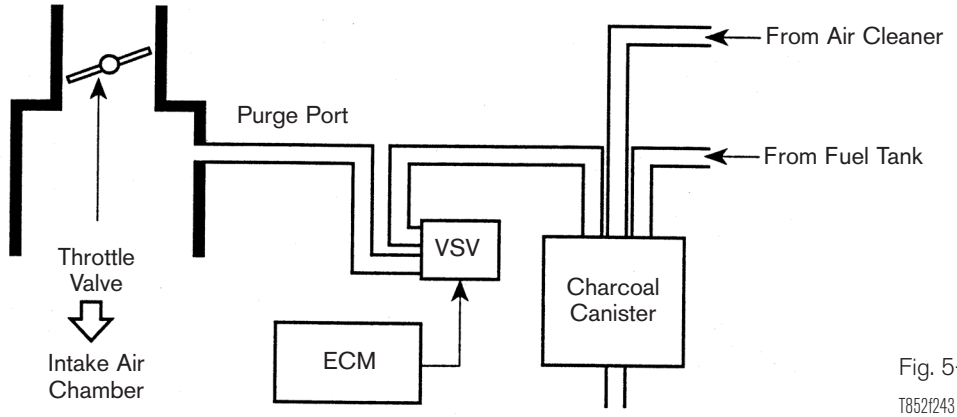

Fig. 5-02
T852f243

ECM Controlled EVAP Systems

ECM controlled EVAP systems were introduced to provide a more precise control and maintain driveability. The ECM will adjust the fuel injection duration based on oxygen sensor or air/fuel ratio sensor signal.

ECM controlled EVAP systems typically use the following components:

- Fuel tank
- Fuel tank cap (with vacuum check valve)
- Charcoal canister (with vacuum & pressure check valves)
- Purge VSV (manifold vacuum purge port)
- Early ECM EVAP systems used a ported vacuum purge port with in-line check valve (port A; on throttle body)

When the engine has reached predetermined parameters (closed loop, engine temp. above 52°C (125°F)), stored fuel vapors are purged from the canister whenever the purge VSV is opened by the ECM. At the appropriate time, the ECM will turn on the purge VSV. This will allow the low pressure in the intake manifold to draw the fuel vapors out of the charcoal canister. The vapors will then be burned in the combustion chamber.

The ECM will change the duty ratio cycle of the purge VSV thus controlling purge flow volume. Purge flow volume is determined by manifold pressure and the duty ratio cycle of the purge VSV. Atmospheric pressure is allowed into the canister to ensure that purge flow is constantly maintained whenever purge vacuum is applied to the canister.

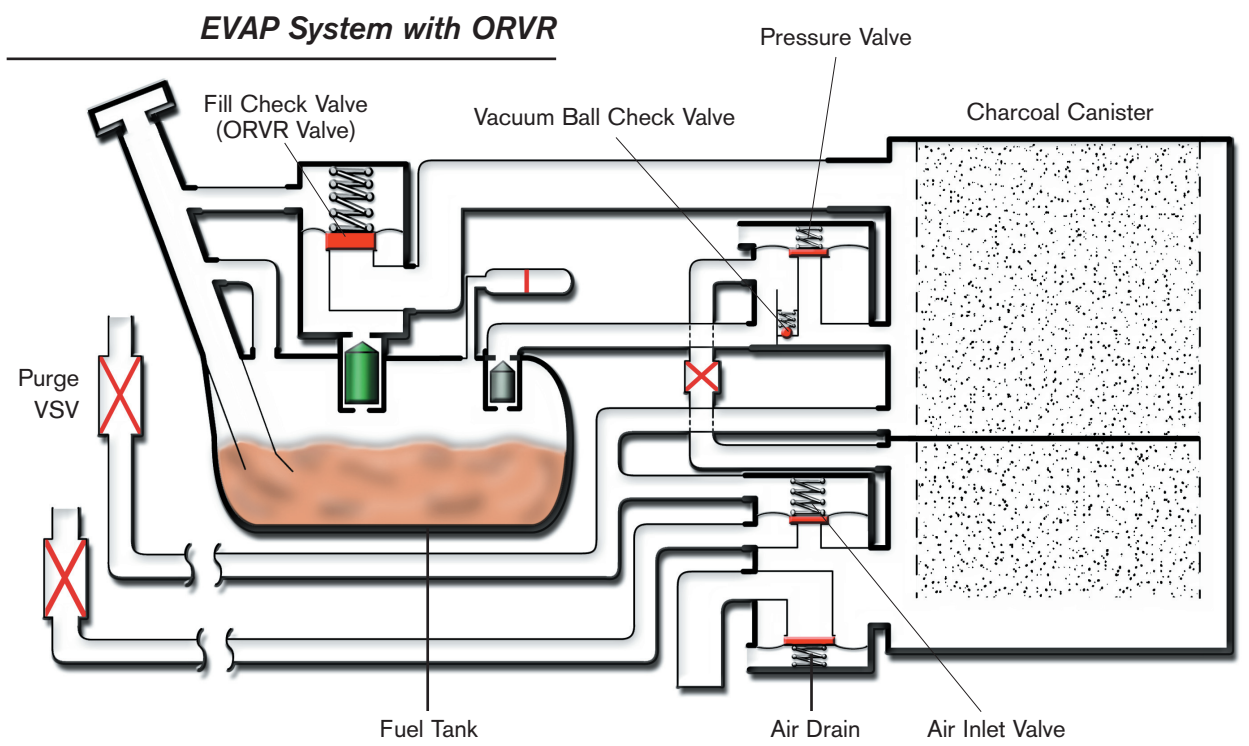

Fig. 5-03

T852f244

Condition	Purge Port	Air Inlet Valve	Tank Vacuum Ball Check	Tank Pressure Port	Fill Check Valve	Air Drain
VSV Purge Valve On	OPEN (V)	OPEN (V)	CLOSED	CLOSED	CLOSED	CLOSED
VSV Purge Valve Off	CLOSED (NV)	CLOSED (NV)	CLOSED	CLOSED	CLOSED	CLOSED
Pressure In Tank	CLOSED	CLOSED	CLOSED	OPEN	CLOSED	CLOSED
Vacuum In Tank			OPEN	CLOSED	CLOSED	CLOSED
Refill			CLOSED	CLOSED	OPEN	OPEN

Charcoal Canister The charcoal canister is filled with activated charcoal. This charcoal has the ability to absorb gasoline vapors and release these vapors when fresh air passes through the canister. Mounted on the charcoal canister are check valves to control vapor flow. The table on the previous page shows the action of each valve according to engine operation and fuel tank conditions.

Pressure in Fuel Tank

Fuel vapor pressure is vented into the charcoal canister when vapor pressure forces the tank pressure control valve open.

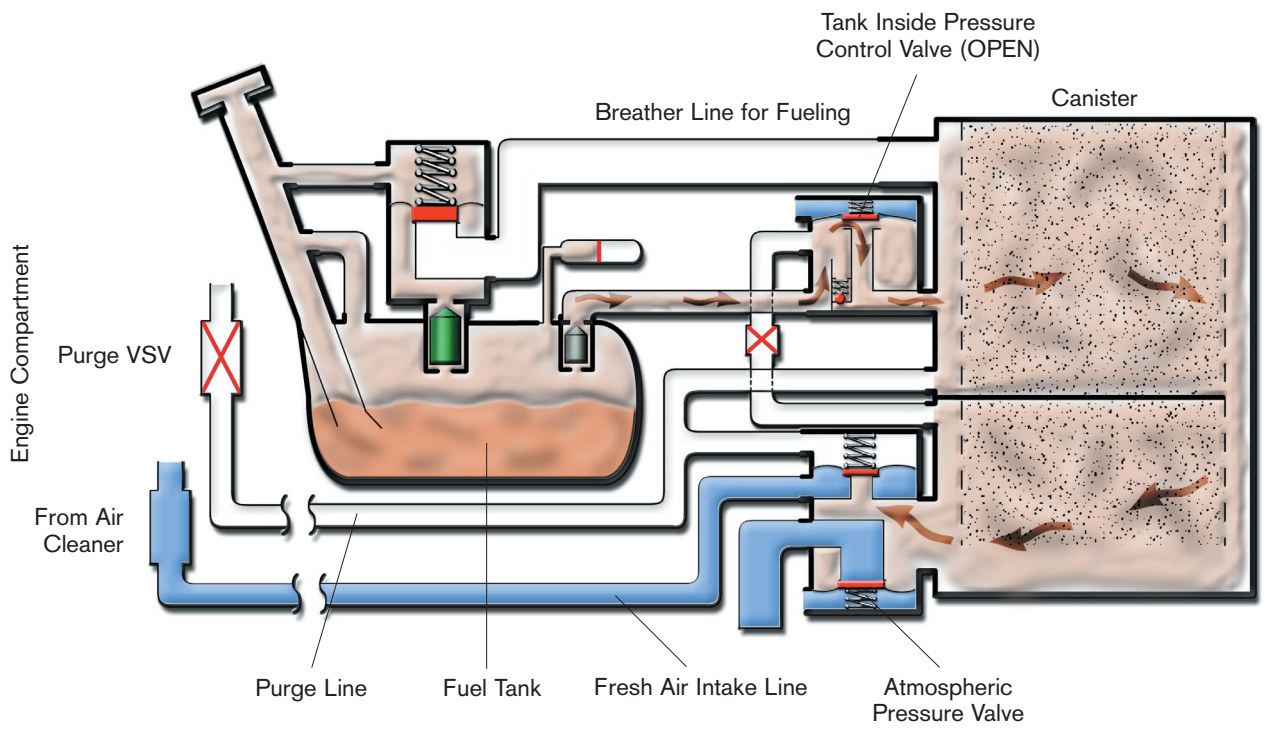

Fig. 5-04
T852f245

Vacuum in Fuel Tank

Vacuum in the tank can be relieved by allowing air to enter through the charcoal canister or fuel tank cap.

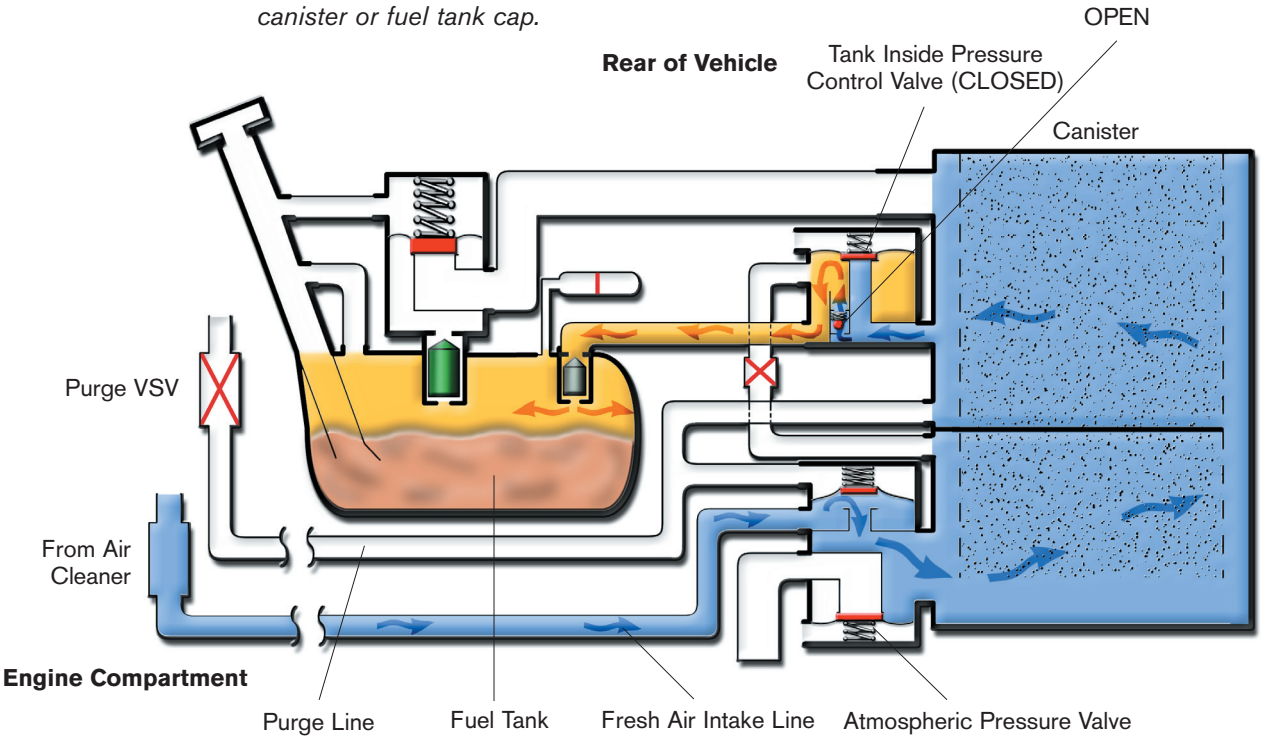

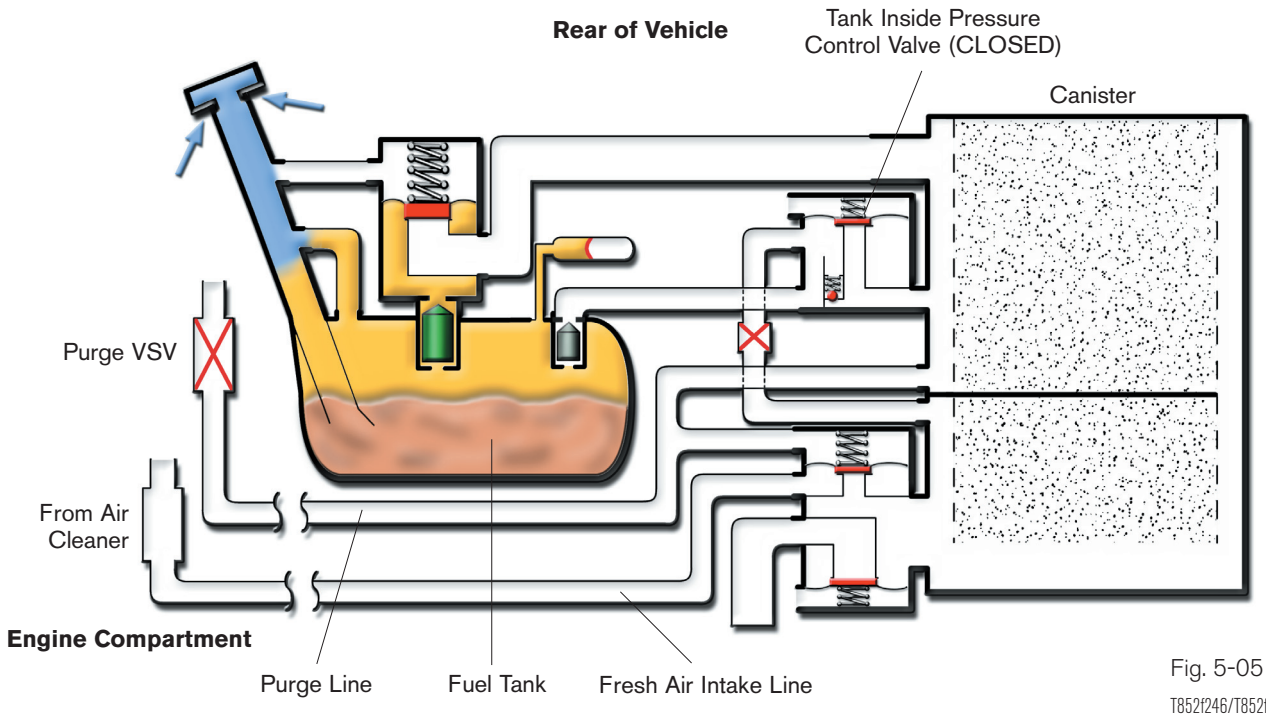

Fig. 5-05

T852f246/T852f334

Purge Mode

During purge, vapors are drawn out of canister and burned in the engine.

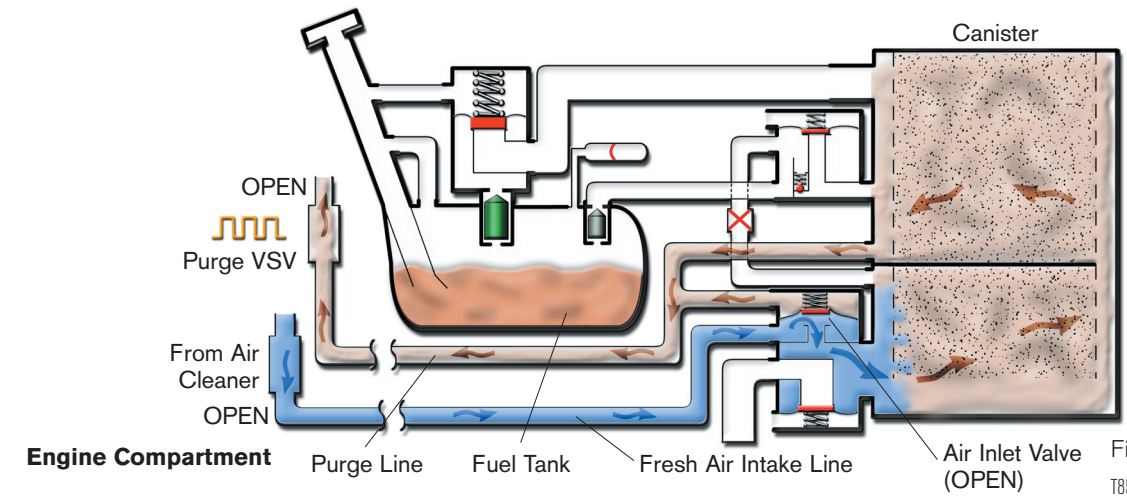

Fig. 5-06
T852f247

Refueling Mode

During refueling, the differential pressure valve and air drain valve are open. Fuel vapors are absorbed by the charcoal canister and excess air is vented to the atmosphere.

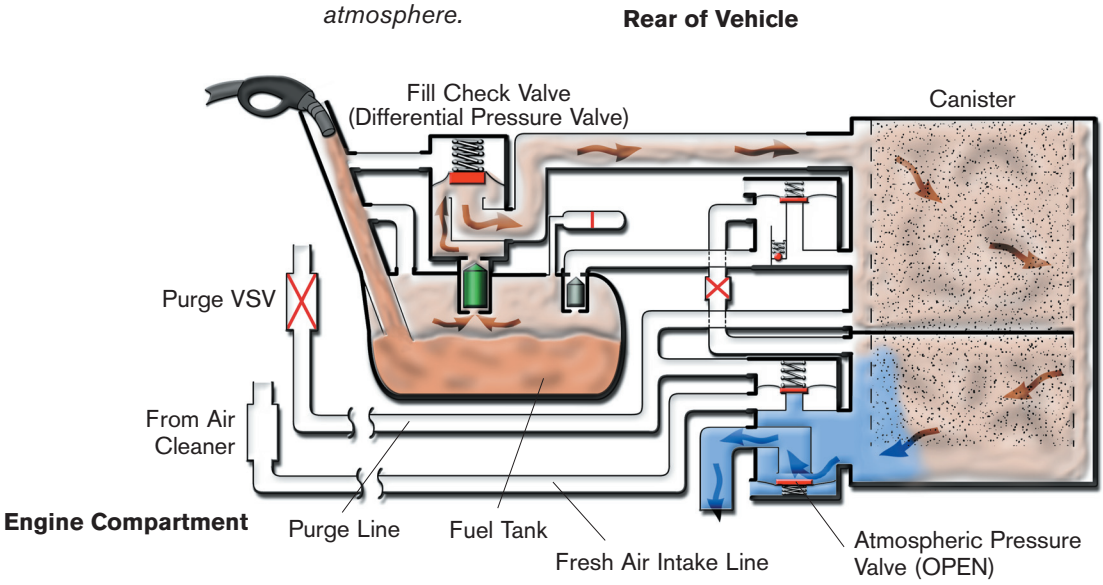

Fig. 5-07
T852f248

EVAP System Service There is no routine maintenance for the EVAP system. It is critical that the proper diameter hoses and parts are used. Failure to do so can result in driveability problems. There are diagnostic procedures for checking the valves listed in the Repair Manual.

Exhaust Gas Recirculation System

The Exhaust Gas Recirculation (EGR) system is used for reducing oxides of nitrogen and for engine knock control. By recirculating a controlled amount of exhaust gases into the intake air-fuel mixture, combustion temperature is lowered. This, in turn, reduces the amount of NO_X emission.

Basic EGR System

Exhaust gases are directed to the intake manifold to lower oxides of nitrogen emissions.

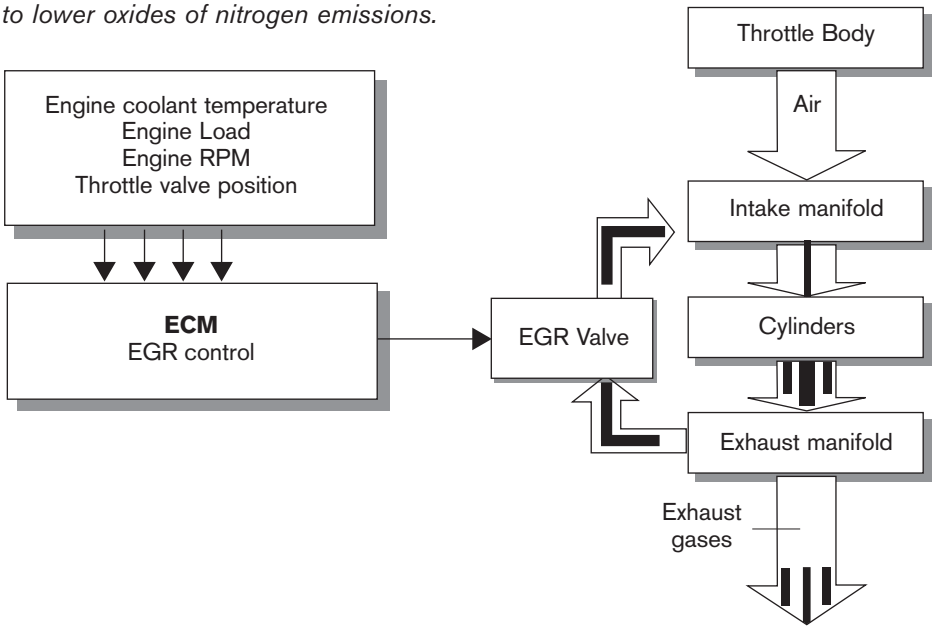

Fig. 5-08

T852f249

EGR Valve

When the EGR valve opens, exhaust gasses enter the intake manifold.

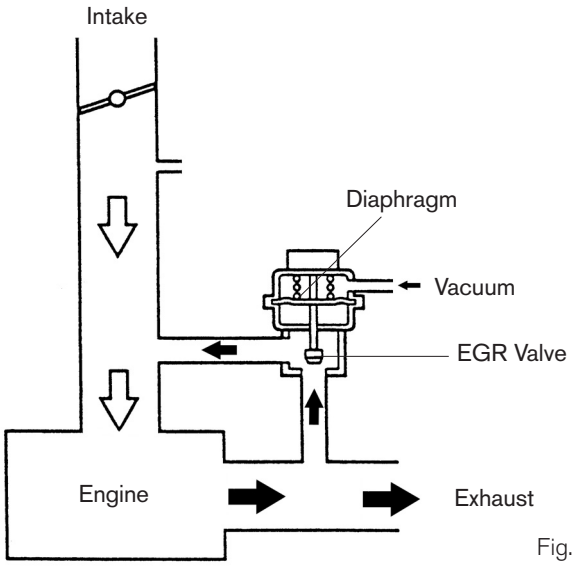

Fig. 5-09

T852f250

Also, the exhaust gases help prevent engine knock and allow for more advanced ignition timing.

EGR Valve

The EGR valve opens and closes the passage between the exhaust manifold and intake manifold. Vacuum is used to move the EGR valves.

Inside the vacuum actuated EGR valve is a valve, diaphragm, and spring. When vacuum is applied to the diaphragm the diaphragm lifts the valve off its seat allowing exhaust gases into the intake air stream. When vacuum is removed the spring forces the diaphragm and valve downward closing the exhaust passage.

The stepper motor EGR is actuated electrically by the ECM eliminating vacuum controls. The ECM will command the motor to open or close the EGR valve.

For proper engine operation, the EGR valve must open to the proper height, and when closed seal the intake manifold from exhaust gases.

CAUTION The EGR valve can get very hot. Handle with care.

Cut-Off Control EGR System

EGR Operating (VSV OFF)

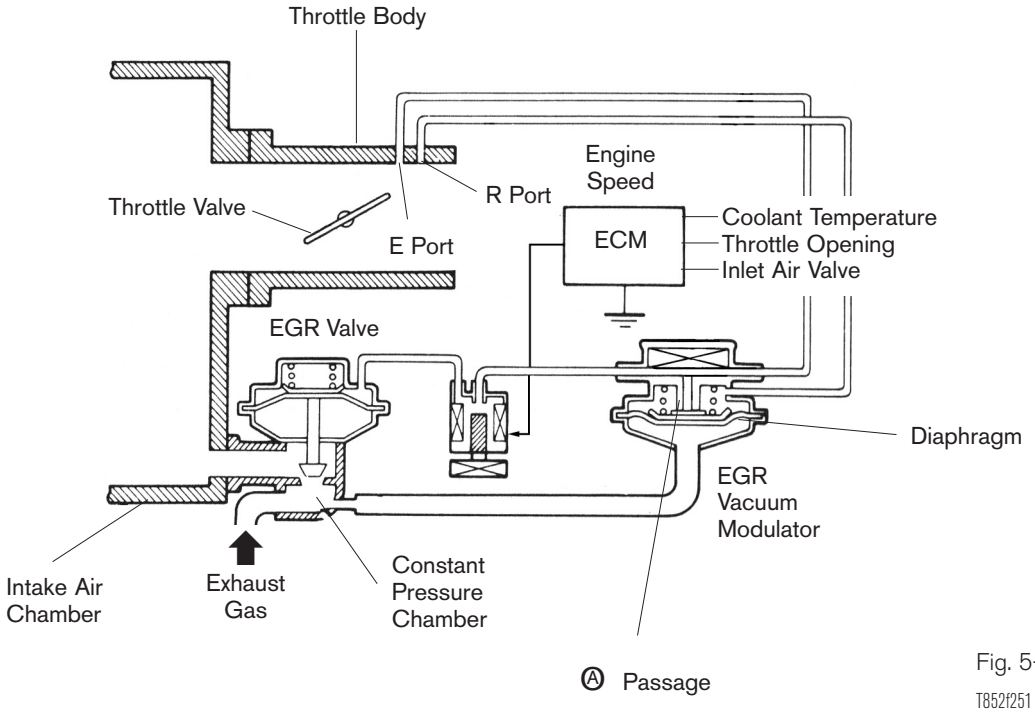

Fig. 5-10
T852f251

Cut-Off Control EGR System Operation

Some EGR valve's are water cooled and this is done to cool the exhaust gases. Cooling the exhaust gases increases the exhaust gases effectiveness in reducing NO_X and engine knock.

In the Cutoff Control EGR system, the amount of exhaust gas to be recirculated is controlled by the EGR vacuum modulator. The EGR modulator is needed because of the changes in engine vacuum and exhaust backpressure. The vacuum available at ports E and R changes with throttle opening. As the throttle valve opens and intake air volume/speed increases, the vacuum signals from ports E and R increases. As engine load increases the amount of exhaust backpressure increases.

For the above reasons, an EGR vacuum modulator controls the amount of vacuum reaching the EGR valve lifting the EGR valve to the correct height.

As determined by the ECM, the EGR VSV is closed to atmospheric pressure allowing the modulated vacuum to reach the EGR valve.

EGR Signal Logic Table

Port	Throttle Valve Opening	Vacuum Signal
E	Position Less than E Port	No Vacuum Present
E	Position More than E Port	Near Manifold Vacuum
R	Position Less than R Port	No Vacuum Present
R	Position More than R Port	Near Manifold Vacuum

Fig. 5-11

EGR Cut-Off

When the EGR VSV is on, the vacuum line is open to atmosphere, preventing the EGR from opening.

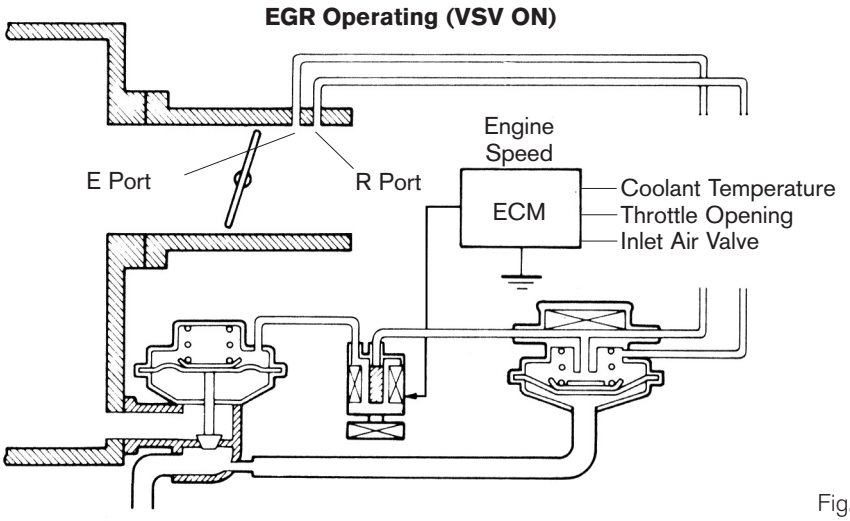

Fig. 5-12

T852f252

EGR Cut-Off Operation

To close the EGR valve, the VSV is turned on by a signal from the ECM. This opens the vacuum line to atmospheric pressure closing the EGR valve and shutting off the exhaust gas flow. This is done when EGR is not needed and to maintain driveability. This operation (EGR cut-off) is implemented when the following conditions exist:

- Coolant temperature below 57°C (134°F)
- During deceleration (throttle valve closed)
- Light engine load (amount of intake air very small)
- Engine speed approximately 4000 RPM or more
- Engine racing (neutral start switch turned on)

EGR Gas Flow

Variations in exhaust pressure.

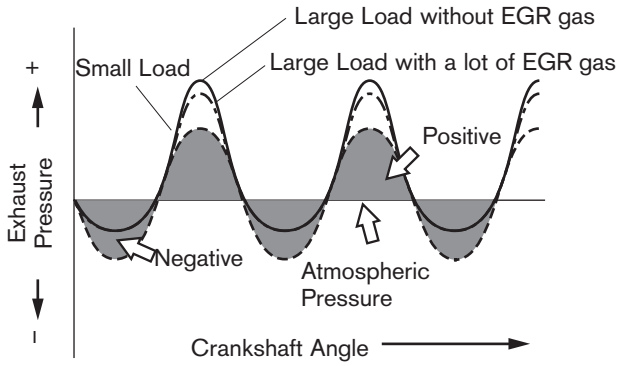

Fig. 5-13
T852f253

EGR Vacuum Modulator

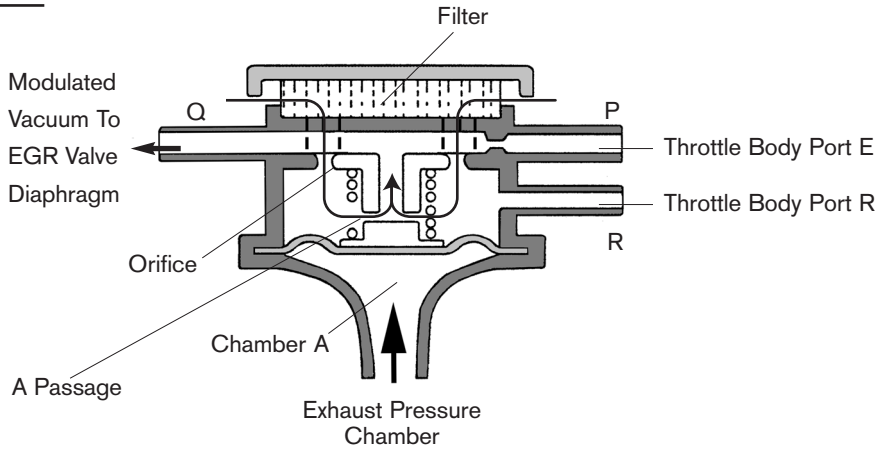

Fig. 5-14
T852f254

EGR Vacuum Modulator

The exhaust gas pressure increases in proportion to the amount of intake air. As the throttle valve opens and the amount of intake air volume increases, a higher exhaust gas pressure is applied to the constant pressure chamber of the EGR vacuum modulator. It pushes the diaphragm of the EGR vacuum modulator upward to narrow the "A" passage. Since vacuum acts then on the E and R ports of the throttle body, the vacuum is modulated by the size of the "A" passage. This

modulated vacuum causes the EGR valve to open, which, in turn, allows exhaust gas into the intake manifold. This also causes the gas pressure inside the exhaust pressure chamber to go down, which in turn, lowers the EGR vacuum modulator diaphragm.

The EGR valve is now under less vacuum and the valve moves until the vacuum balances with the spring tension and the amount of EGR gas is regulated. Therefore, the amount of EGR is regulated according to the exhaust gas pressure and the vacuum signal strength.

Constant Vacuum System

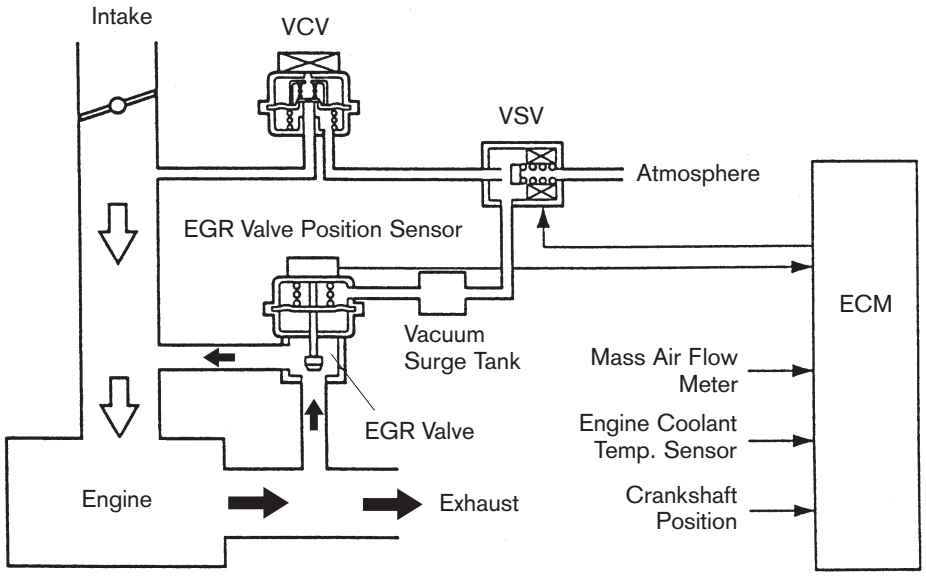

Fig. 5-15

T852f255

Constant Vacuum System Operation

This type of ECM EGR controlled system uses a Vacuum Control Valve (VCV), an EGR VSV, and an EGR valve position sensor to regulate exhaust gas flow.

Vacuum Control Valve (VCV)

When diagnosing the VCV, remember that the vacuum output is very low. An accurate vacuum gauge is needed.

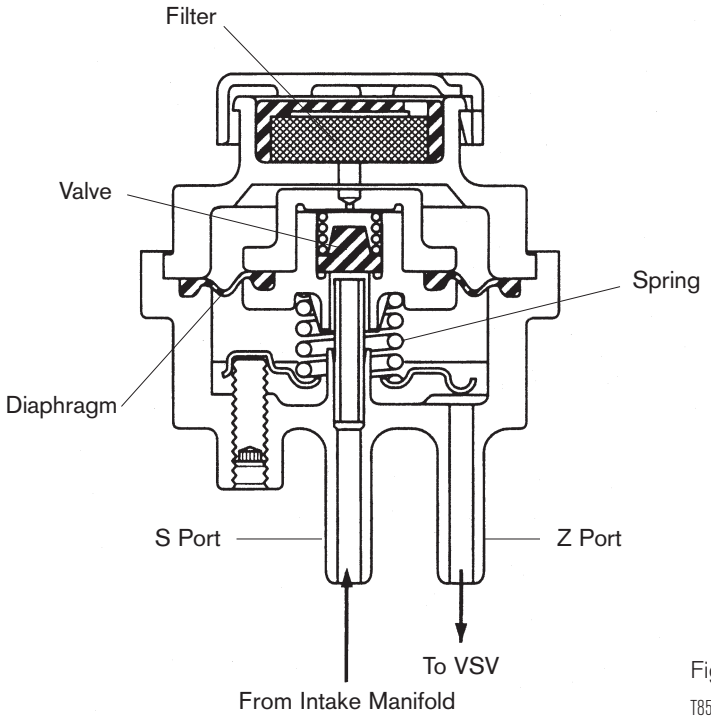

Fig. 5-16

Vacuum Control Valve (VCV)

The VCV is a valve that regulates the intake manifold vacuum applied to the VSV to a constant level (-17 kPa, -l30 mmHg, -5 inHg).

The intake manifold vacuum that is supplied through the S port is applied to the diaphragm. If this force becomes greater than the spring force, the diaphragm moves downward allowing the valve to close the S port and the atmosphere supplied through the filter.

Conversely, if the vacuum that is applied to the diaphragm becomes weaker, the diaphragm moves upward causing the valve to open and to shut off the atmosphere and supply the intake manifold vacuum. This process is repeated to regulate the vacuum in the Z port to a constant level.

EGR Valve Position Sensor

This sensor measures EGR valve height.

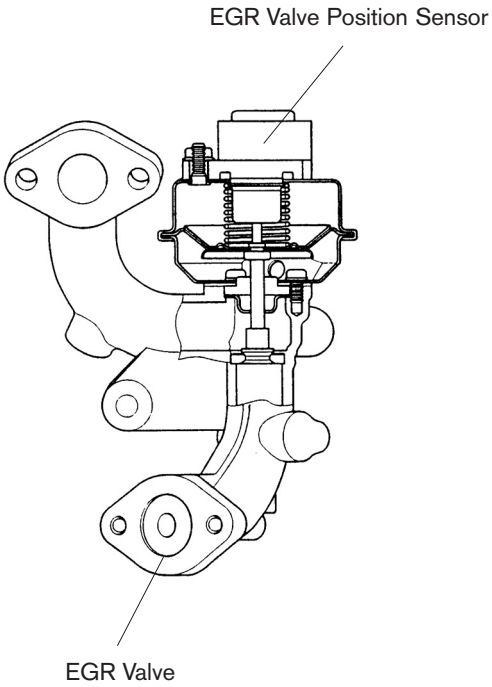

Fig. 5-17
T852f056

EGR Valve Position Sensor

The EGR valve position sensor is a potentiometer sensor mounted on the EGR valve. The EGR valve and signal arm in the position sensor move together. As the EGR valve opens, the voltage signal of the EGR valve position sensor increases.

EGR VSV

The EGR VSV is a three way VSV. When the VSV is off, atmospheric pressure is applied to the EGR valve keeping the valve closed. When the engine has reached the appropriate conditions, the ECM will turn on the EGR VSV applying vacuum to the EGR valve.

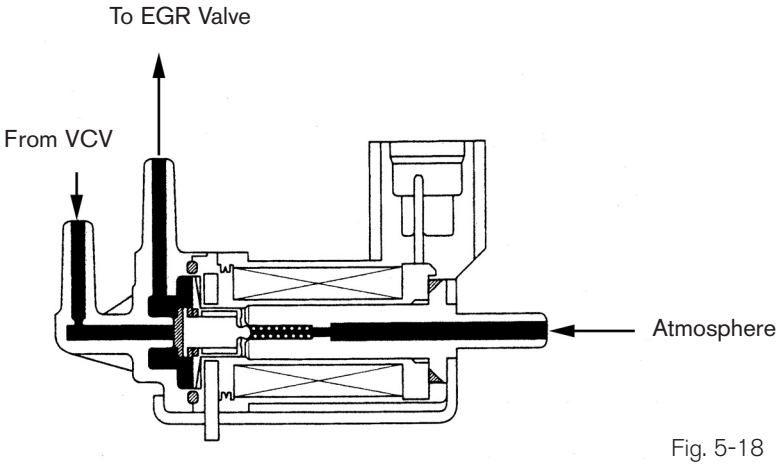

Fig. 5-18
T852f257

Operation

The ECM uses the EGR valve position sensor signal to control EGR valve position height and to detect excessive EGR flow. EGR valve height is controlled by the strength of the vacuum signal and the ECM controls vacuum signal strength by varying the pulsewidth signal sent to the EGR VSV. If greater EGR flow is needed, the ECM increases the pulsewidth signal to the EGR VSV. This applies more vacuum to the EGR valve.

Under the following conditions the ECM turns off the VSV and closes the EGR valve:

- Coolant temperature below 57°C (134°F)
- During deceleration (throttle valve closed)
- Light engine load (amount of intake air very small)
- Engine speed approximately ≈ 4000 rpm or more
- Engine idling

Stepper Motor EGR System

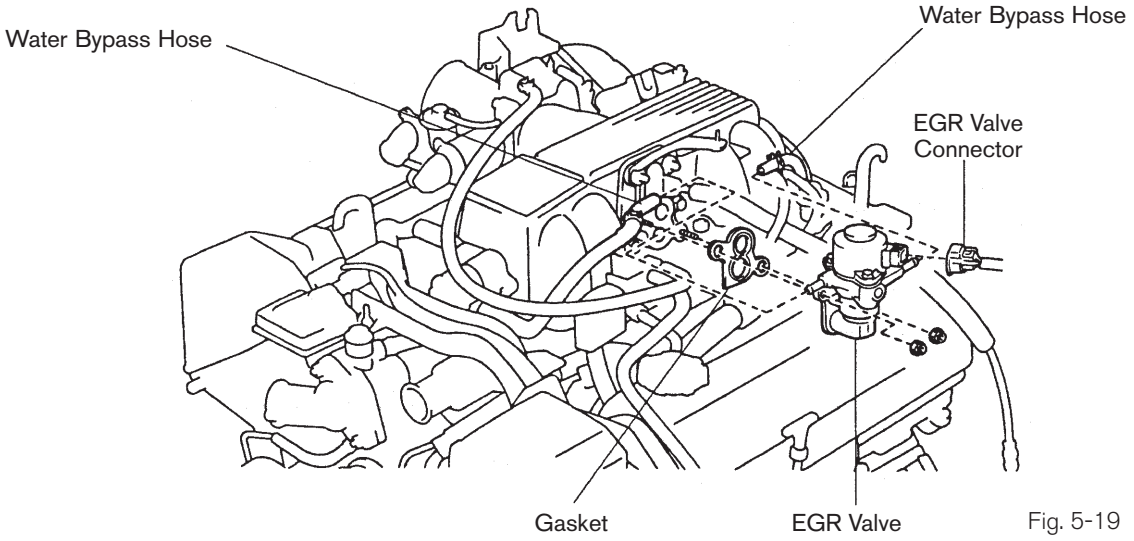

Fig. 5-19

Stepper Motor EGR System

The ECM directly controls the stepper motor EGR valve directly by electrical signals. The stepper motor can rotate clockwise or counterclockwise opening or closing the EGR passage. When more EGR is desired, the ECM will activate each motor circuit in the proper sequence to open the valve and reverse the sequence to close the valve. Like previous systems, the EGR is opened and closed at the same times.

Stepper Motor Circuit Operation

By grounding the coils in the proper sequence, the ECM is able to open or close the EGR valve.

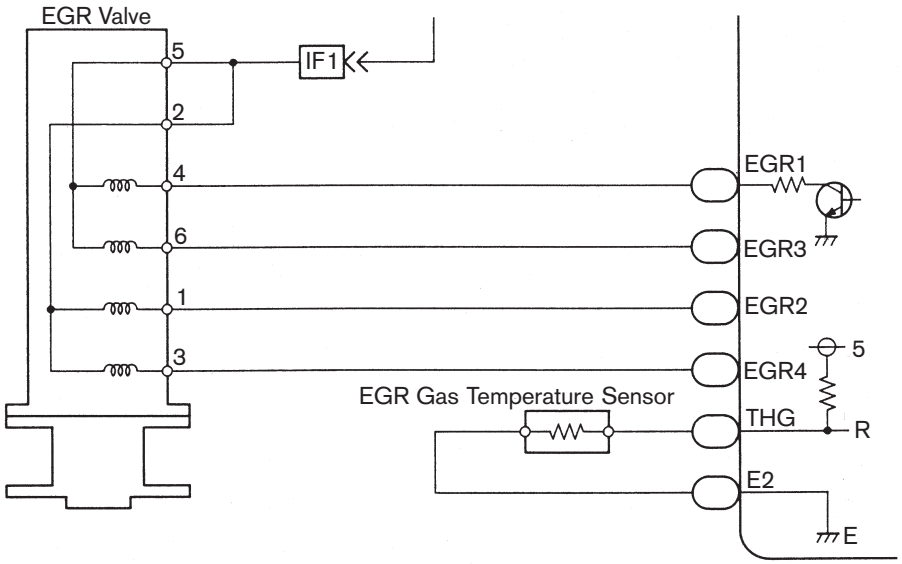

Fig. 5-20

L852f807

EGR Stepper Motor Diagnosis

The EGR stepper motor coils are checked for resistance and can be energized to see if the valve moves.

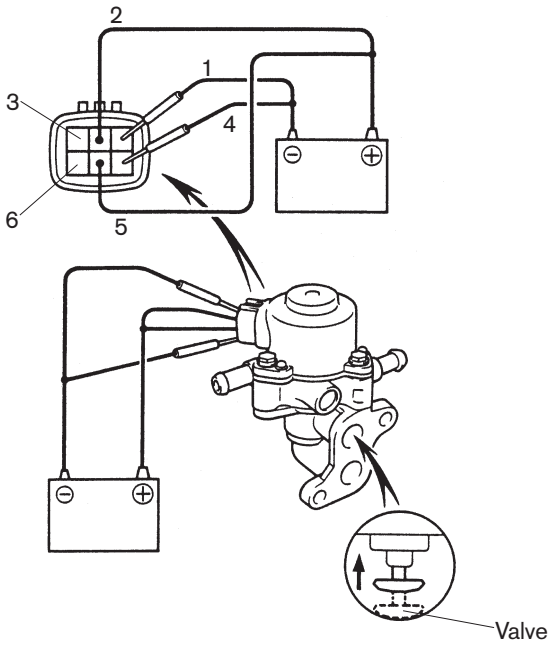

Fig. 5-21

L852f808

This system is monitored by the ECM for insufficient and excess EGR flow. On EGR systems using the EGR temperature sensor, the EGR temperature sensor signal is used for detection. If the temperature is too low (cold) there is little or no flow. If the temperature is high when the EGR valve is supposed to be off, the EGR valve is leaking.

Notes

WORKSHEET 5–1
EVAP Systems

Vehicle	Year/Prod. Date	Engine	Transmission

Technician Objectives

With this worksheet, you will learn to test EVAP systems using the required tools and equipment, retrieve and apply the needed service information, retrieve and interpret service data information.

Tools and Equipment

- Vehicle Repair Manual & Vehicle EWD
- Diagnostic Tester
- Hand Tool Set
- Vacuum Gauge

Section 1

EVAP Identification

Use the Repair Manual and Technician Handbook to answer the following questions on the vehicle you are working on.

1. Is the EVAP system the Intrusive or Non-Intrusive type?

   _____

2. Is the EVAP system equipped with the ORVR system?

   _____

3. Identify on the canister the tank valve assembly.
4. Identify on the canister the air inlet valve assembly.
5. If equipped, identify the ORVR vent line.

Section 2

Purge VSV Operation

1. Select ACTIVE TEST.
2. Set to EVAP VSV and turn the VSV ON using the left and right arrow keys.
3. Disconnect the purge hose from the canister side of the purge VSV and listen for a duty cycle pulsing sound from the VSV.

4. If a pulsing sound is heard, will vacuum be present at the purge hose?

_____

5. Turn the purge VSV OFF using the left and right arrow keys. Check for vacuum on the VSV with a vacuum gauge. If vacuum is present, the purge VSV is

_____

Note: If a purge valve were stuck, open or closed, the following steps are recommended:

1. If the valve is stuck open or closed, this could be the result of active charcoal contamination or metal flakes from manufacturing inside the purge VSV.
2. If charcoal is found in the purge lines, all hoses must be cleaned of charcoal and the canister and purge VSV must be replaced.
3. If metal is found in the purge VSV, blow the metal lines out between canister and engine and replace the VSV.

Section 3

Vapor Pressure Sensor

1. Refer to SF section in the Repair Manual on vapor pressure sensor inspection.
2. Turn the ignition switch ON.
3. Disconnect the vacuum hose (the one connected to EVAP pressure).
4. Connect a voltmeter to terminals PTNK and E2. According to the RM, measure the voltage under specified conditions.

Condition	Applied Pressure	PTNK Voltage
Below Atmospheric Pressure		
Atmospheric Pressure		
Above Atmospheric Pressure		

As pressure increase, voltage increases. _____

5. Predict the PTNK signal voltage if the PTNK wire were to become disconnected. Voltage will

_____

6. Disconnect the vps electrical connector.
7. Record the voltage between PTNK and E2 terminals at the ECM: _____
8. Why did this happen?

_____

_____

EVAP Systems

Name _____ Date _____

Review this sheet as you are doing the worksheet. Check each category after completing the worksheet and instructor presentation. Ask the instructor if you have questions. The comments section is for you to write where to find the information, questions, etc.

Topic	*I have questions*	*I know I can*	Comment
Locate components in the EVAP system using the EWD and RM			
Find wire colors, pin numbers in the EVAP electrical circuits using the EWD and RM			
Visually inspect tank, fuel cap, lines, canister			
Activate purge VSV with Active Test			
Test purge VSV and compare to specifications to determine condition			
Check and retrieve relevant DTCs			
Locate in the RM three sections related to EVAP system concerns			
Test vapor pressure sensor			

Notes

WORKSHEET 5–2
EGR Cutoff Control System

Vehicle	Year/Prod. Date	Engine	Transmission

Technician Objectives

With this worksheet, you will learn to test the EGR cutoff control system using the required tools and equipment, retrieve and apply the needed service information, retrieve and interpret service data information.

Tools and Equipment

- Vehicle Repair Manual
- Vehicle EWD
- Diagnostic Tester
- Hand Tool Set
- Vacuum pump with gauge

Section 1

Component Tests

VSV Component Check

1. Connect a DVOM to the EGR VSV terminal at the ECM.
2. According to the Repair Manual, perform the Inspect VSV operation test procedure. Test procedure and specifications are found in what section?

   _____

3. When the engine is cold, does the EGR valve have vacuum applied to it?

Circle the correct words in the following statements.

4. When cold, the EGR VSV is **ON/OFF** and **OPEN/CLOSED** to atmosphere.
5. When the EGR valve is open, the EGR VSV is **ON/OFF** and **OPEN/CLOSED** to atmosphere.

EGR Vacuum Modulator

1. Check the EGR Vacuum Modulator according to the Repair Manual.
2. With the engine OFF and Ports P and R blocked, should air pass freely from Port Q to atmosphere?

   Why? _____

3. With the engine ON and Ports P and R blocked, should air pass freely from Port Q to atmosphere?

   Why? _____

4. If the atmospheric port were blocked, what would be the engine symptoms?

_____

EGR Valve

1. With the engine idling and warm, slowly apply vacuum to the EGR valve, so that the engine runs rough. What happened to EGR temperature?

_____

EGR Cutoff Control System

Name _____ Date _____

Review this sheet as you are doing the worksheet. Check each category after completing the worksheet and instructor presentation. Ask the instructor if you have questions. The comments section is for you to write where to find the information, questions, etc.

Topic	*I have questions*	*I know I can*	Comment
Locate components in the EGR system using the EWD and RM			
Find wire colors, pin numbers in the EGR electrical circuits using the EWD and RM			
Visually inspect EGR valve, modulator, hoses			
Activate EGR VSV with Active Test			
Test EGR VSV and compare to specifications to determine condition			
Test vacuum modulator and compare to specifications to determine condition			
Check and retrieve relevant DTCs			
Locate in the RM three sections related to EGR system concerns			

Notes

WORKSHEET 5–3
EGR Constant Vacuum System

Vehicle	Year/Prod. Date	Engine	Transmission

Technician Objectives

With this worksheet, you will learn to test the EGR constant vacuum system using the required tools and equipment, retrieve and apply the needed service information, retrieve and interpret service data information.

Tools and Equipment

- Vehicle Repair Manual
- Vehicle EWD
- Diagnostic Tester
- Hand Tool Set
- Vacuum pump with gauge

Section 1

Component Tests:

VCV Component Check

1. According to the Repair Manual, perform the VCV test procedure for operation.

   _____

2. What port has vacuum applied to it? Did it match the Repair Manual?

   _____

3. A good VCV puts out:

   _____

EGR Valve Position Sensor

1. Using the vacuum pump, apply the vacuum specified and record EGR valve position sensor voltage.

0 inHG	2 inHG	4 inHG

2. From the voltage readings, is the EGR valve position sensor voltage signal normal?

EGR VSV

1. Connect the positive (+) lead of the DVOM to EGR VSV, terminal.
2. Connect the negative (-) lead to ground.

3. Start the engine and record voltage.

_____

Is the EGR VSV open to atmosphere pressure with the EGR valve off?

_____

Section 3

EGR Operation

1. With the DT, go to Active Test and select EGR. In User Data select EGR Temp, EGR valve position sensor.
2. Connect the positive (+) lead of the DVOM to EGR VSV connector/terminal.
3. Connect - lead to ground.
4. Record the following.

Engine RPM	EGR Temperature	EGR Valve Position	VSV Voltage	EGR Gas Flow (Y/N)

5. Activate the EGR system and record the following.

Engine RPM	EGR Temperature	EGR Valve Position	VSV Voltage

6. Increase engine RPM and record the following.

Engine RPM	EGR Temperature	EGR Valve Position	VSV Voltage

7. What happened to EGR temperature?

_____

8. What happened to EGR valve position sensor voltage?

_____

9. What happened to EGR VSV voltage as the EGR valve height increased?

_____

10. If the EGR VSV were disconnected, what would be common engine symptoms, and what DTC would set?

_____

EGR Constant Vacuum System

Name _____ Date _____

Review this sheet as you are doing the worksheet. Check each category after completing the worksheet and instructor presentation. Ask the instructor if you have questions. The comments section is for you to write where to find the information, questions, etc.

Topic	*I have questions*	*I know I can*	Comment
Locate components in the EGR system using the EWD and RM			
Find wire colors, pin numbers in the EGR electrical circuits using the EWD and RM			
Visually inspect EGR valve, modulator, hoses			
Activate EGR VSV with Active Test			
Test EGR VSV and compare to specifications to determine condition			
Test VCV and compare to specifications to determine condition			
Test EGR valve position sensor and compare to specifications to determine condition			
Test EGR temperature sensor and compare to specifications to determine condition			
Check and retrieve relevant DTCs			
Locate in the RM three sections related to EGR system concerns			

Notes

Idle Air Control Systems

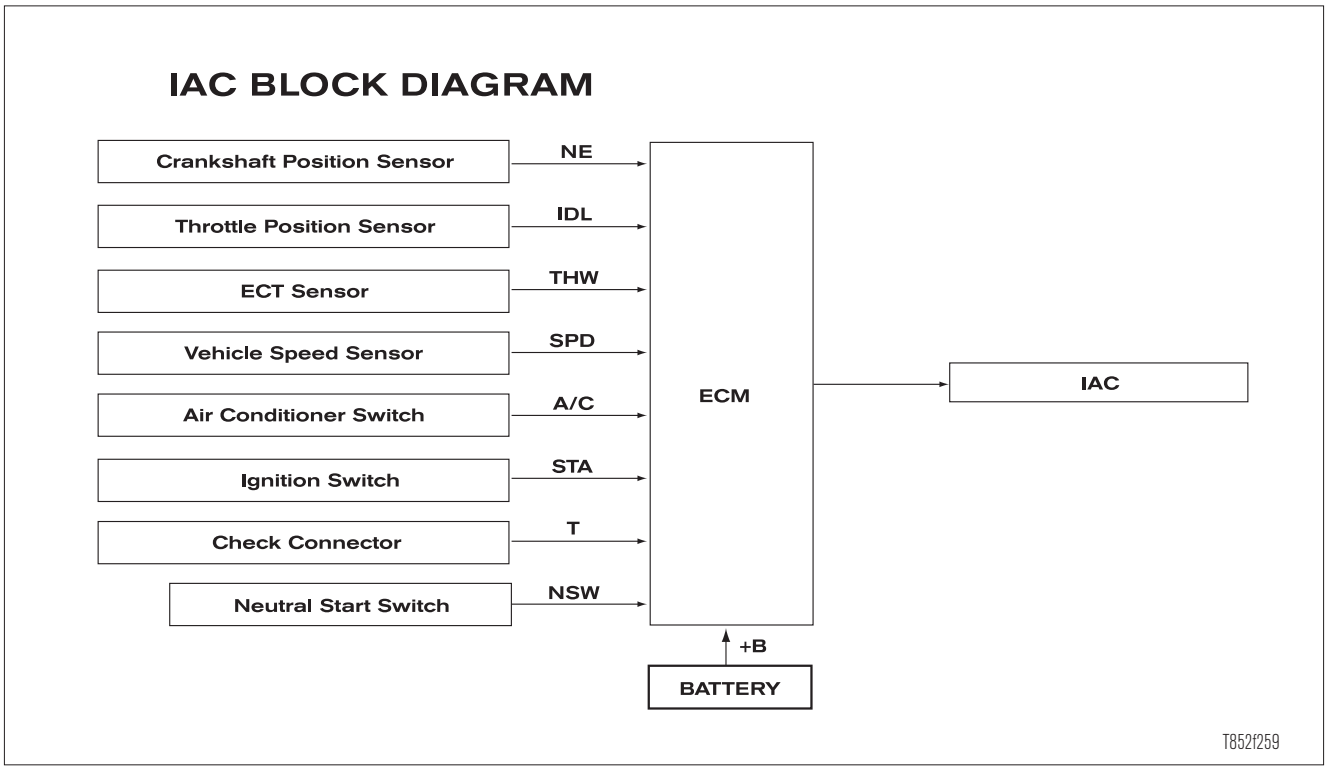

Lesson Objectives

1. Determine the condition of the IACV system based on engine data
2. Determine the root cause of a failure(s) in the IACV system using appropriate diagnostic procedures

Notes

Idle Air Control Systems

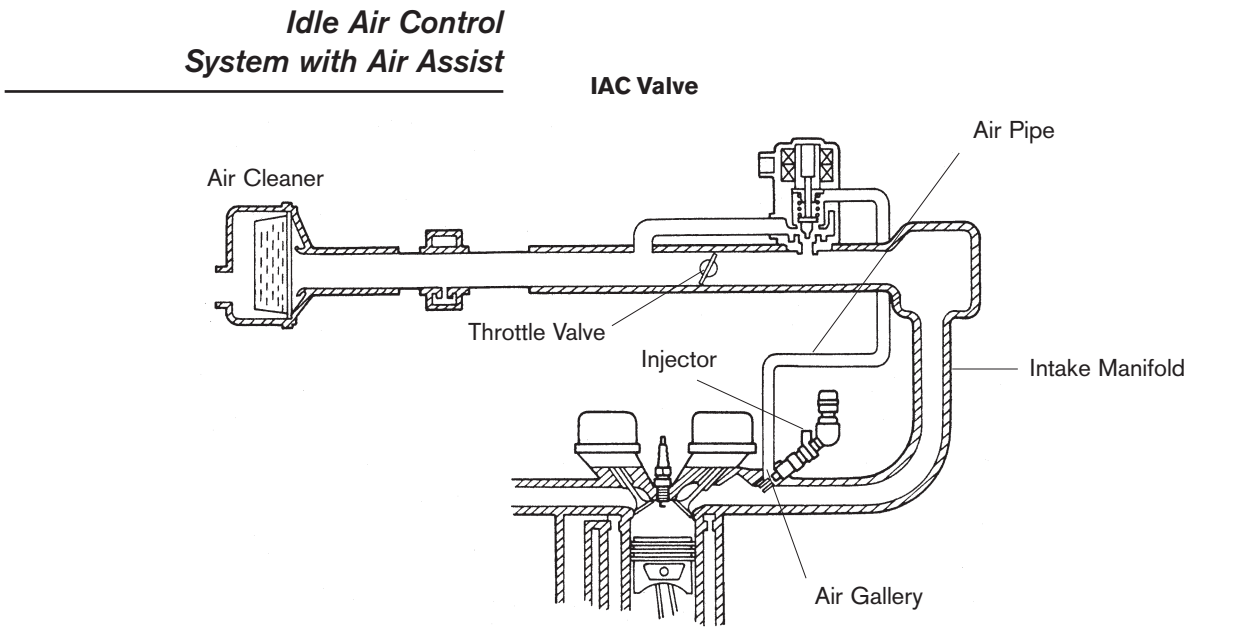

Fig. 6-01

T852f258

Idle Air Control Systems

The Idle Air Control (IAC) system regulates engine idle speed by adjusting the volume of air that is allowed to bypass the closed throttle valve. The ECM controls the Idle Air Control Valve (IACV) based on input signals received from various sensors. The system is necessary to provide stabilization of curb idle when loads are applied to the engine and to provide cold fast idle on some applications. Older technical references call the IACV the Idle Speed Control (ISC) valve.

The idle air control system regulates idle speed under at least one or more of the following conditions, depending on application:

- Cold Fast Idle
- Warm Curb Idle
- Air Conditioner Load
- Electrical Load
- Automatic Transmission Load
- Power Steering Idle Up

The IAC system will also prevent engine stall on deceleration.

IAC System

IAC BLOCK DIAGRAM

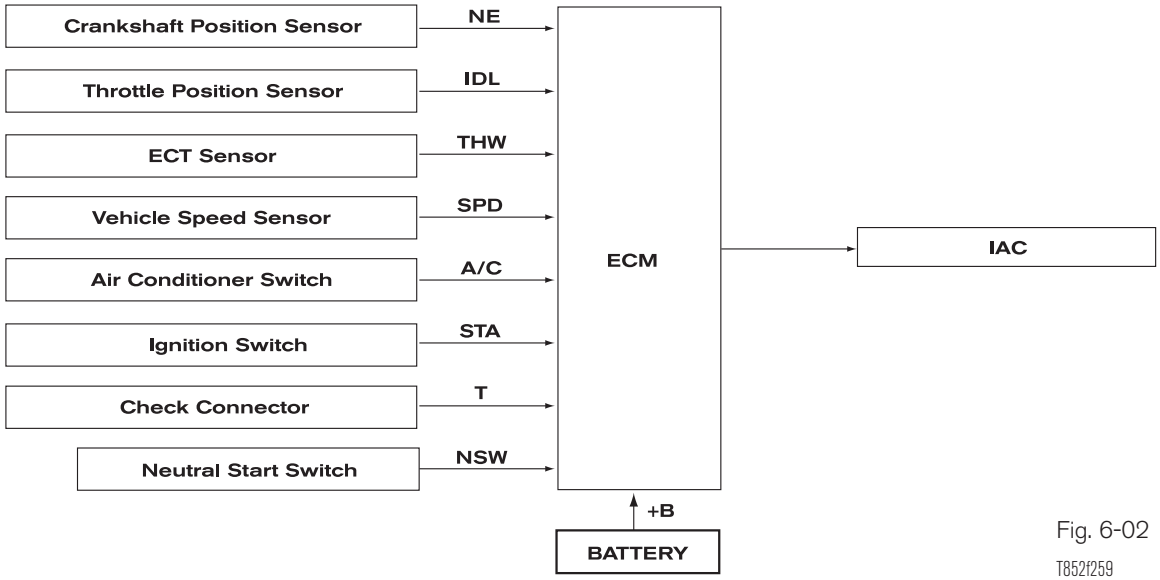

Fig. 6-02

T852f259

ECM Modulated Idle Air Control Systems (IAC)

There are four different types of ECM controlled IAC systems. These systems are referred to as:

- Stepper motor type
- Rotary solenoid types
- Duty control ACV type
- ON/OFF control VSV type

Stepper Motor IACV

As the valve steps increase, more air by-passes the throttle valve.

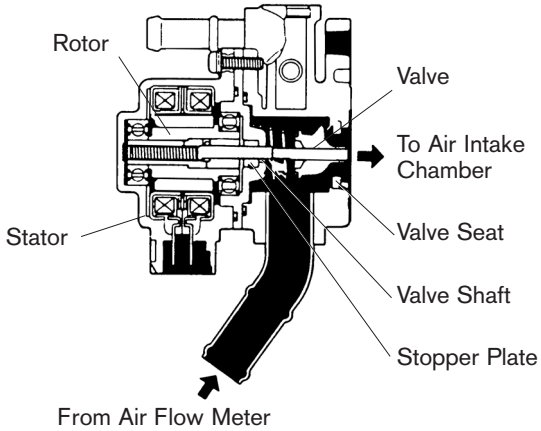

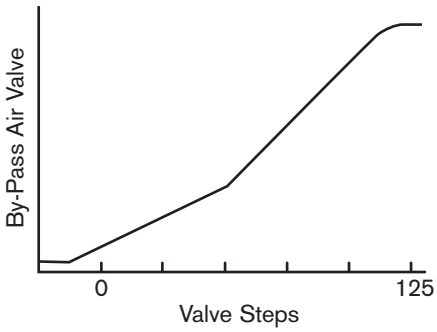

Fig. 6-03

T852f260/T852f261

Stepper Motor IAC Valve

The stepper motor IACV is located on the intake air chamber or throttle body. It regulates engine speed by means of a stepper motor and a pintle valve that controls the volume of air bypassing the closed throttle valve. The IACV throttle air bypass circuit routes intake air past the throttle valve directly to the intake manifold through an opening between the pintle valve and its seat. The size of this opening is determined by how far the pintle is from the seat.

The valve assembly consists of four electrical stator coils, a magnetic rotor, a valve and valve shaft. The valve shaft is screwed into the rotor so that as the rotor turns, the valve assembly will extend and retract.

Stepper Motor IAC Operation

The ECM commands a change in IAC position by sequentially turning on the stepper motor coils.

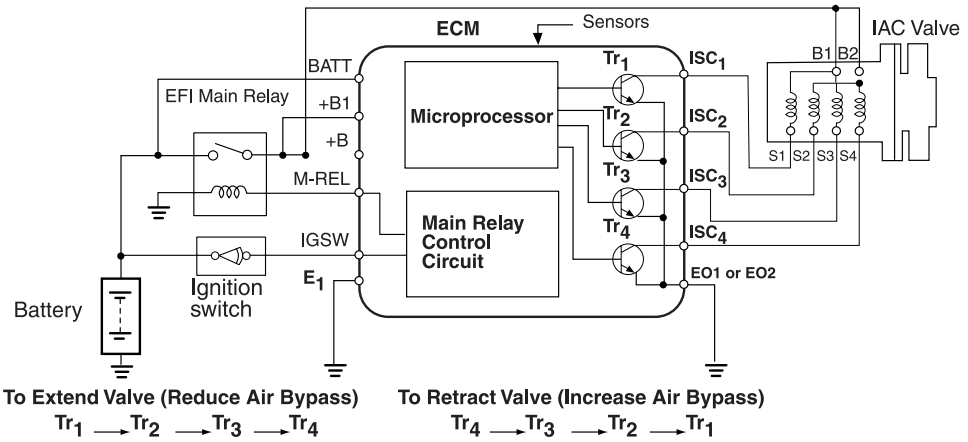

Fig. 6-04

T852f262

The ECM controls movement of the pintle valve by sequentially grounding the four electrical stator coils. Each time current is pulsed through one of the stator coils, the shaft moves one "step," either into or out of the air passage. The direction of valve movement depends on the sequence by which the ECM energizes the coils.

The ECM closes the air bypass by extending the valve through the following sequence:

ISC1 > ISC2 > ISC3 > ISC4

The ECM opens the air bypass by extending the valve through the following sequence:

ISC4 > ISC3 > ISC2 > ISC1

The pintle valve has 125 possible positions, from fully retracted (maximum air bypass) to fully extended (no air bypass). In the event that the IACV becomes disconnected or inoperative, its position will become fixed at the step count where it failed. Because the stepper idle air control motor is capable of controlling large volumes of air, it is used for cold fast idle control and is not used in combination with a mechanical air valve.

Initial Set-Up And After-Start Control

The IAC is opened to its 125th step immediately after the engine stops running. After engine start-up the ECM positions the IAC valve based on the current coolant temperature

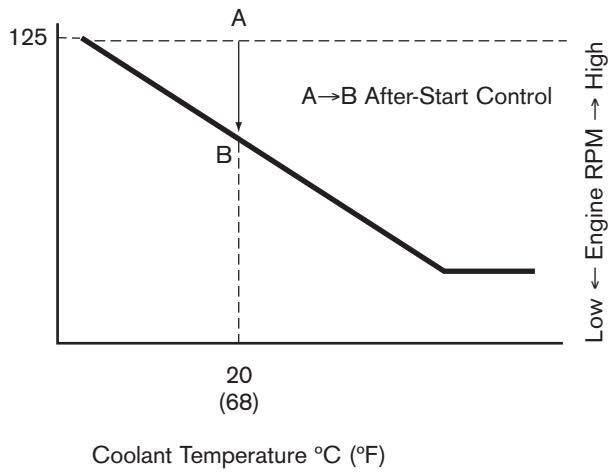

Fig. 6-05
T852f263

Primary Controlled Parameters

Initial Set-Up

Engines equipped with the stepper type IACV use an ECM controlled EFI main relay which delays system power down for about two seconds after the ignition is turned off. During these two seconds, the ECM fully opens the IACV to 125 steps from seat, improving engine stability when it is started. This reset also allows the ECM to keep track of the IACV position after each engine restart.

After-Start Control

Once the engine has started and reached approximately 500 RPM, the ECM drives the IACV to a precise number of steps from seat based on the coolant temperature at time of start-up. This information is stored in a look up table in the ECM memory and is represented by point B on the graph.

Warm-up Control

The IAC valve position adjusted to match the actual idle speed to calculated target speed.

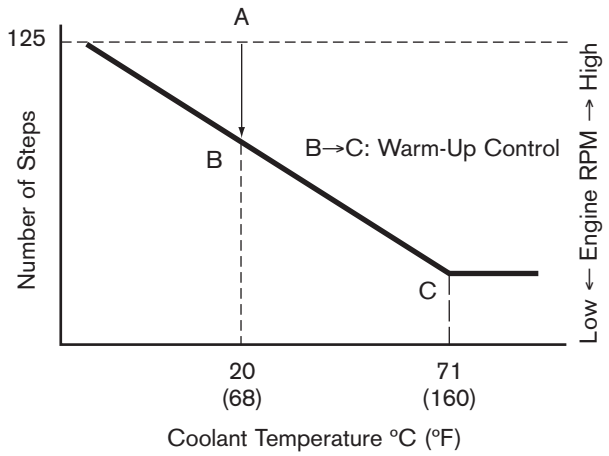

Fig. 6-06

T852f264

Engine Warm-up Control

As the engine coolant approaches normal operating temperature, the need for cold fast idle is gradually eliminated. The ECM gradually steps the IACV toward its seat during warm-up. The warm curb idle position is represented by point C on the graph. When the coolant temperature is approximately 71°C (160°F), the cold fast idle program has ended.

Feedback Control

The IAC valve position adjusted to match the actual idle speed to calculated target speed.

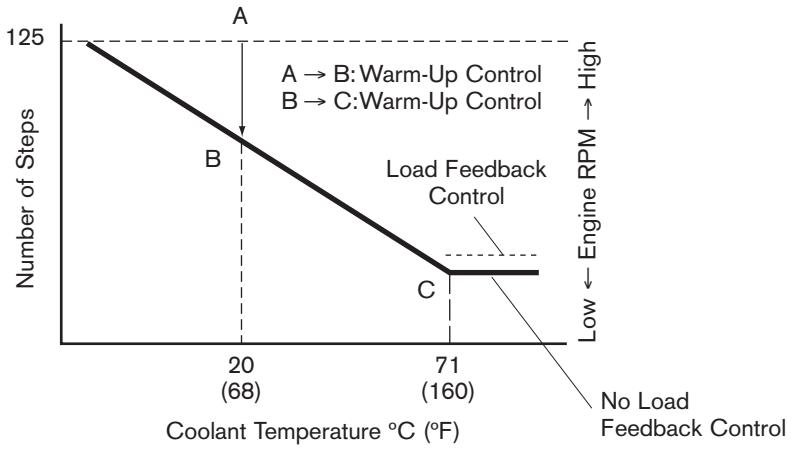

Fig. 6-07

T852f265

Feedback (Closed Loop) Idle Air Control

The ECM has a preprogrammed target idle speed that is maintained by the IACV based on feedback from the NE signal. Feedback idle air control occurs any time the throttle is closed and the engine is at normal operating temperature. The target idle speed is programmed in an ECM look up

table and varies depending on inputs from the A/C and NSW signals. Any time actual speed varies by greater than 20 RPM from target idle speed, the ECM will adjust the IAC valve position to bring idle speed back on target.

Target Idle Speed

Note the change in target speed as the A/C or NSW are on or off.

Air Conditioner Switch	Neutral Start Switch	Engine Speed
ON	ON	900 RPM
	OFF	750 RPM
OFF	ON	650 RPM
	OFF	580 RPM

Fig. 6-08

Engine Load/Speed Change Estimate Control

To prevent major loads from changing engine speed significantly, the ECM monitors signals from the Neutral Start Switch (NSW), the Air Conditioner switch (A/C), and models equipped with Power Steering Oil Pressure Switch (PS). By monitoring these inputs, the ECM reestablishes target idle speeds accordingly and adjusts IACV position.

Before a change in engine speed can occur, the ECM has moved the IACV to compensate for the change in engine load. This feature helps to maintain a stable idle speed under changing load conditions.

These speed specifications can be useful when troubleshooting suspected operational problems in the step type idle air control system or related input sensor circuits.

Other Controlled Parameters

Electrical Load Idle-up - Whenever a drop in voltage is sensed at the ECM +B or IG terminals, the ECM responds by increasing engine idle speed. This strategy ensures adequate alternator rpm to maintain system voltage at safe operational levels.

Deceleration Control - Some ECMs use a deceleration function to allow the engine to gradually return to idle. This strategy helps improve emissions control by allowing more air into the intake manifold on deceleration. This extra air is available to mix with any fuel that may have evaporated during the low manifold pressure conditions of deceleration.

Learned Idle Air Control - The idle air control program is based on an ECM stored look up table, which lists pintle step positions in relation to specific engine rpm values. Over time, engine wear and other variations tend to change these relationships. Because this system is capable of feedback control, it is also capable of memorizing changes in the relationship of step position and engine rpm. The ECM periodically updates its memory to provide more rapid and accurate response to changes in engine rpm.

NOTE If the battery is disconnected, the ECM must relearn target step positions.

Rotary Solenoid IAC System

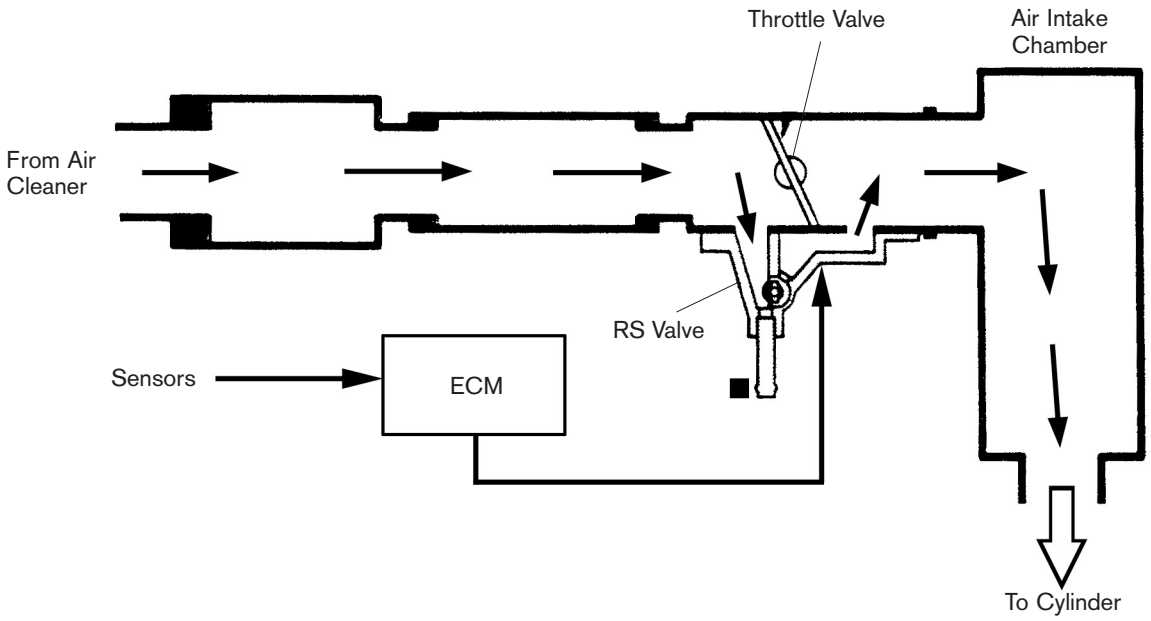

Fig. 6-09
T8521266

Rotary Solenoid

The RS IACV is mounted on the throttle body and intake air bypassing the throttle valve passes through it. According to the signals sent from the ECM, the IACV controls the flow rate of air bypassing the throttle

valve during idle. The air flow rate determines the idle speed. The IACV receives its power from the EFI relay and ground through the ECM.

Rotary Solenoid Circuit

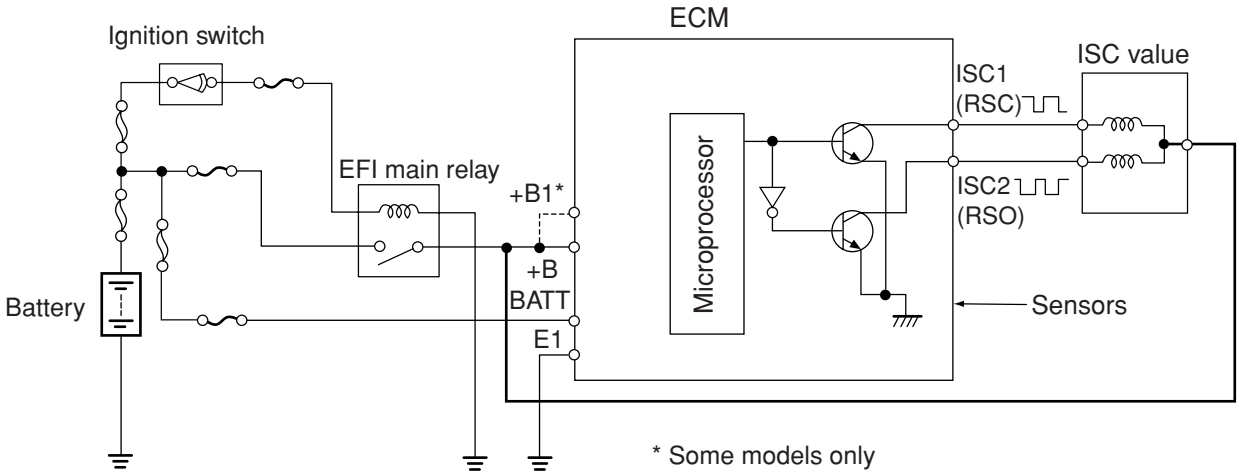

Fig. 6-10
T852f267

Types of Rotary Solenoid IACV

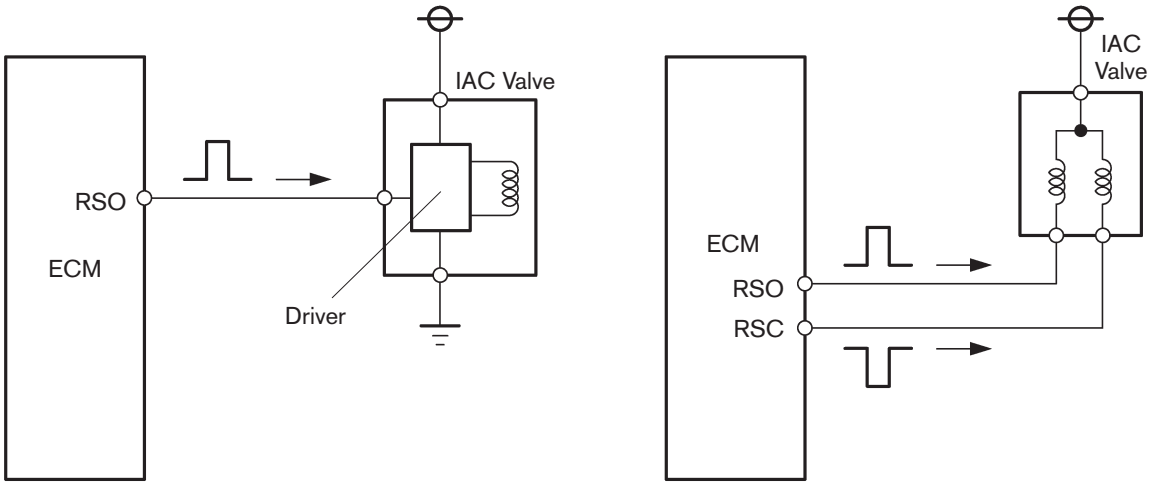

Single Driver Circuit

Dual Driver Circuits

Fig. 6-11
T852f268

There are two styles of rotary solenoid IACVs. The older style uses two driver circuits, one driver for each coil. The newer style uses a single driver circuit, one coil is controlled by the ECM while the other coil is always grounded. They are not interchangeable. An easy way to tell which type of rotary solenoid is to use the wiring schematic. The older style has two wires connected to the ECM while the newer type has one connected to the ECM and the other wire connected to ground.

Rotary Solenoid IACV

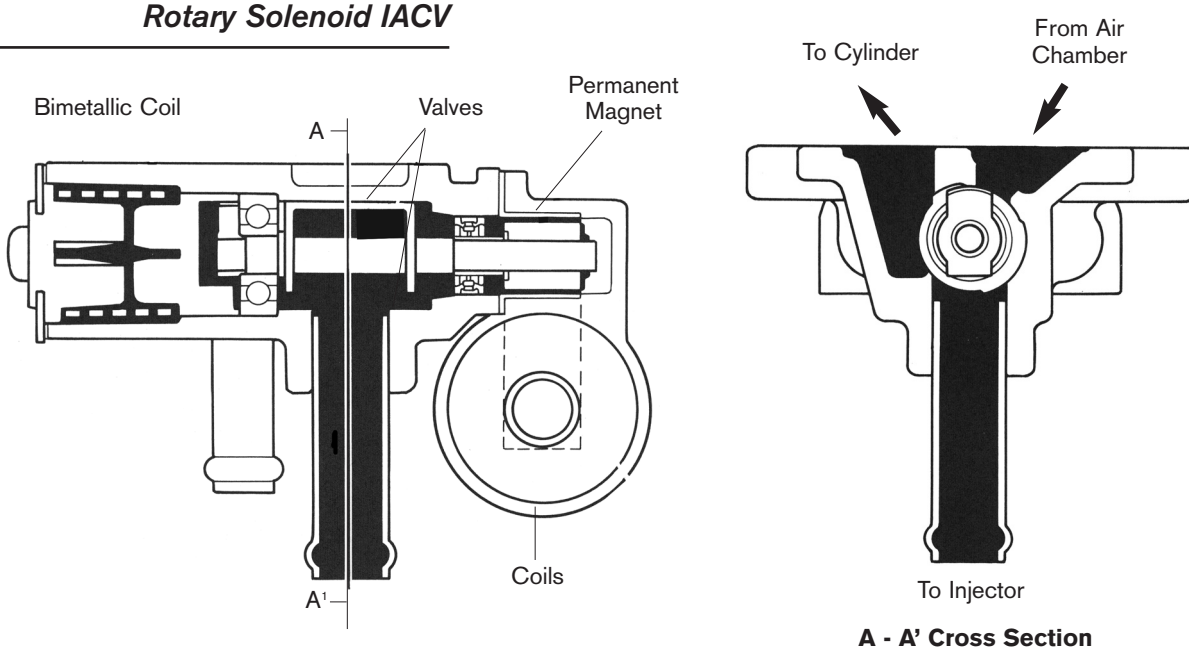

A - A' Cross Section

Fig. 6-12

T852f269/T852f270

Rotary IACV Operation

The valve assembly consists of two electrical coils, a permanent magnet mounted on the valve shaft, and a valve. A fail-safe bimetallic strip is fitted to the end of the shaft to operate the valve in the event of electrical failure in the IACV system.

Located at the end of the valve shaft, the cylindrical permanent magnet rotates when its two poles are repelled by the magnetism exerted by coils T1 and T2.

Anchored to the midsection of the valve shaft, the valve controls the amount of air passing through the bypass port. The valve, valve shaft, and permanent magnet all rotate together.

IACV Components

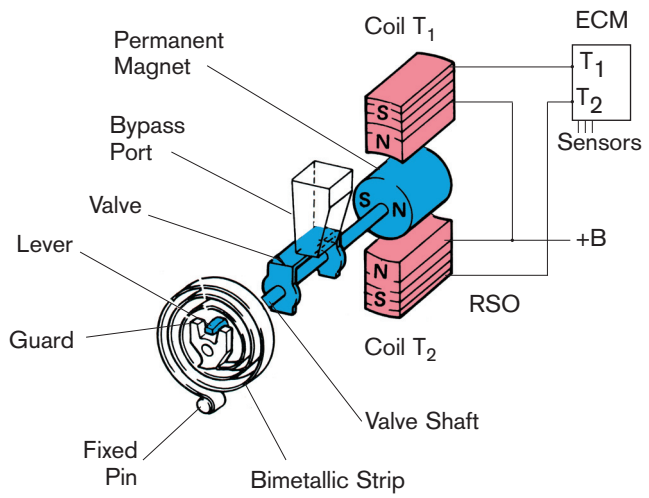

Fig. 6-13

T852f271

As shown, each coil is connected to a transistor, T1 and T2 located in the ECM. When transistor T1 turns on, current flows through that coil. The magnetic field of the coil and the magnetic field of the permanent magnet cause the valve to rotate clockwise. When T2 is turned on, the valve rotates counterclockwise.

The ECM varies the on time (duty ratio) for each coil. The difference in strength between the two magnetic fields determines the position of the valve. The frequency is very high, 250Hz. This high frequency helps the valve maintain the correct position for proper air flow.

Single Driver Rotary IACV Operation

The difference with this type of IACV is that the ECM sends a duty cycle signal to one coil inside the IACV; the other coil is always on. To change the IACV position, ECM changes the duty ratio in the controlled coil.

IACV Movement

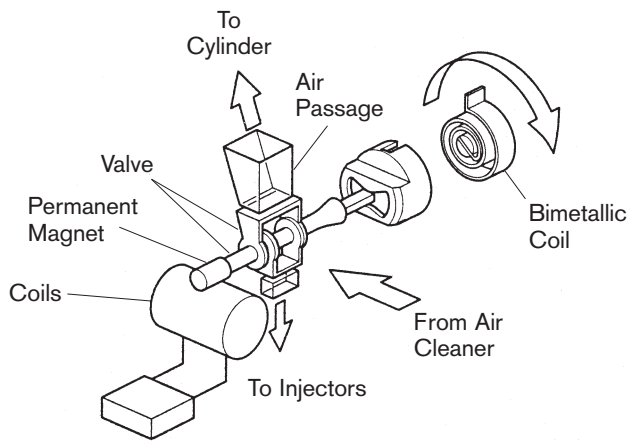

Fig. 6-14

T852f272

Bimetallic Spring Operation

If the electrical connector is disconnected or the valve fails electrically, the shaft will rotate to a position determined by the balancing of the permanent magnet with the iron core of the coils and the bi-metal strip.

The cold idle will not be as fast as normal and the warm idle will be higher than normal.

Using a bimetallic strip allows the IACV to change airflow rate with the change in temperature. The default rpm is approximately 1000 to 1200 RPM once the engine has reached normal operating temperature.

Rotary IACV Controlled Parameters

Engine Starting

As the engine is started, the ECM opens the IACV to a preprogrammed position based on coolant temperature and sensed rpm.

Warm-up

Once the engine has started, the ECM controls the fast idle based on coolant temperature. As the engine approaches normal operating temperature, engine speed is gradually reduced. At this time the ECM is comparing actual idle rpm to the target rpm.

Feedback Control

The ECM utilizes a feedback idle air control strategy (which functions very much like the stepper motor IAC system). That is, when the actual engine speed is lower than the target idling speed, the ECM signals the IACV to open. Conversely, when the actual idle speed is higher than the target idle speed, the ECM signal the IACV to close.

Engine Load/Speed Change Estimate Control

To prevent major loads from changing engine speed significantly, the ECM monitors signals from the neutral start switch (NSW), the air conditioner switch (A/C), headlights or rear window defogger (ELS), and in models equipped with power steering, an oil pressure switch (PS). By monitoring these inputs, the ECM reestablishes target idle speeds accordingly, and adjusts IACV position.

Before a change in engine speed can occur, the ECM has moved the IACV to compensate for the change in engine load. This feature helps to maintain a stable idle speed under changing load conditions.

These speed specifications can be useful when troubleshooting suspected operational problems in the IAC system or related input sensor circuits.

The Rotary Solenoid IAC system utilizes a learned idle air control strategy. The ECM memorizes the relationship between engine rpm and duty cycle ratio and periodically updates its memory. Over time, engine wear and other variations tend to change these relationships. Because this system is capable of feedback control, it is also capable of memorizing changes in the relationship of duty ratio and engine rpm. The ECM periodically updates its memory to provide more rapid and accurate response to changes in engine rpm.

NOTE

If the battery is disconnected, the ECM must relearn target step positions.

A/C Idle-Up

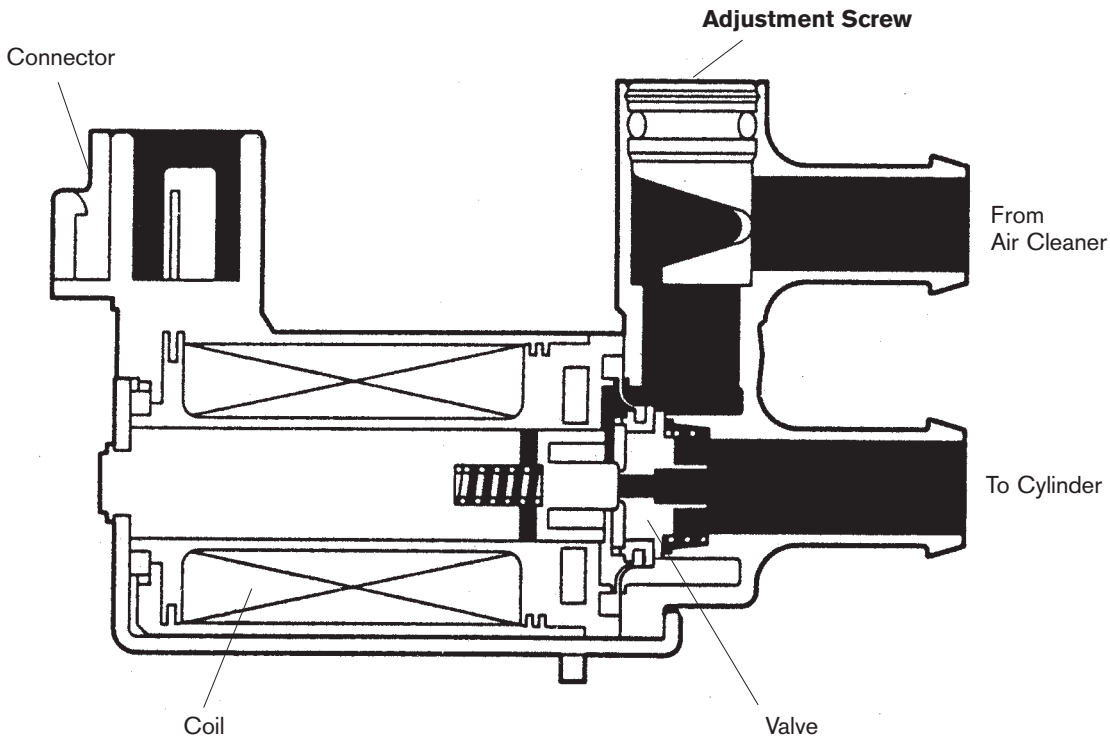

Fig. 6-15
T852f273

Air Conditioning Idle-Up

The air conditioning idle-up system is used in some models equipped with the rotary solenoid to increase engine idle rpm any time the air conditioning compressor is in operation. This system maintains engine idle stability during periods of A/C compressor operation. Additionally, it keeps compressor speed sufficiently high to ensure adequate cooling capacity at idle speed. The air control VSV is turned on or off by the air conditioning ECU.

Power Steering Idle-Up

Non-ECM Controlled System.

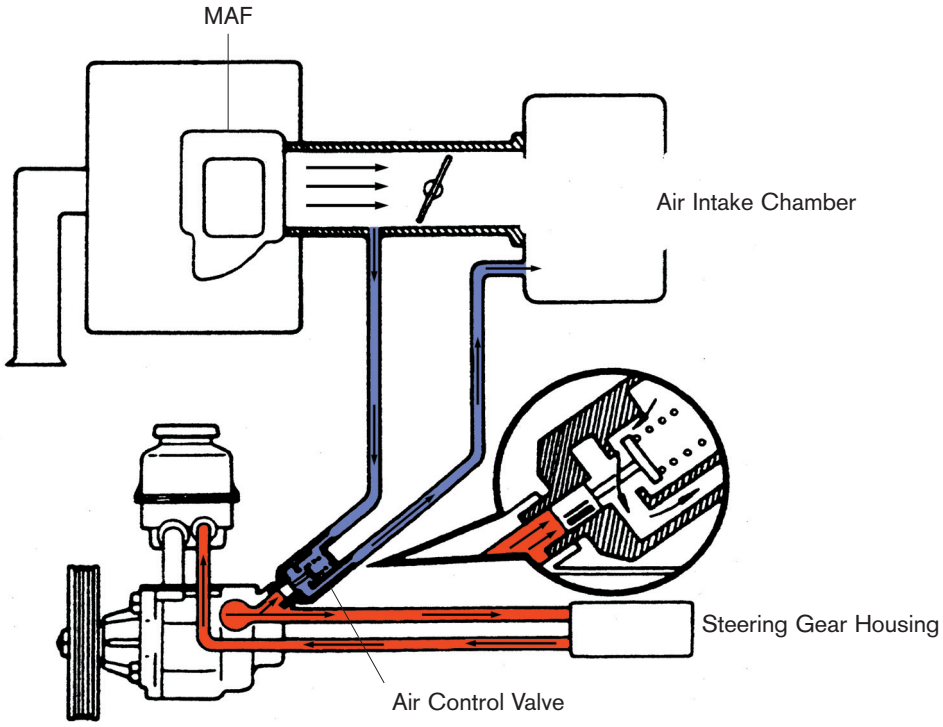

Fig. 6-16
T852f274

Power Steering Idle-Up

The power steering system draws a significant amount of horsepower from the engine when the steering wheel is turned to either stop. This can have an adverse effect on idle quality. To address this potential problem, many engines equipped with power steering use a power steering idle-up system that activates whenever the steering wheel is turned to a stop. There are two types:

- Non-ECM controlled
- ECM controlled

Non-ECM Controlled

The Non-ECM controlled power steering idle-up system consists of a hydraulically operated air control valve and a vacuum circuit which bypasses the throttle valve. Whenever power steering pressure exceeds the calibration point of the control valve, the valve opens, allowing a calibrated volume of air to bypass the closed throttle valve.

The system is only functional during very low speed maneuvering and at idle. The system can be tested by turning the steering wheel and listening for an RPM increase.

ECM Controlled

The ECM controlled power steering idle-up uses a pressure switch or sensor in place of the air control valve. Receiving a change in voltage signal from the sensor, the ECM will command the IACV to open, increasing engine RPMs.

Notes

WORKSHEET 6–1
Rotary Solenoid IACV System

Vehicle	Year/Prod. Date	Engine	Transmission

Technician Objectives

With this worksheet, you will learn to test rotary solenoid IACV circuits using the required tools and equipment, retrieve and apply the needed service information, retrieve and interpret service data information.

Tools and Equipment

- Vehicle Repair Manual
- Vehicle EWD
- Diagnostic Tester
- DVOM
- Hand Tool Set

Section 1

1. Setup the Diagnostic Tester, go to Data List. Connect the DVOM to either IACV terminal.
2. Start the engine and note IACV percentage and voltage.
3. With the engine warmed up, increase engine RPM to 2500. What happened to IACV percentage and voltage?

   _____

4. With engine at idle, create an intake manifold leak that will cause the engine to run rough but not stall.
5. What happened to IACV percentage?

   _____

Section 2

1. Using the RM, inspect IACV operation by connecting TE1 and E1 terminals in DLC1 (if applicable). What happened to the idle?

   _____

2. Go to Active Test for the IACV system. Increase the IACV percentage. What happened to engine RPM?

   _____

3. Decrease IACV percentage. What happened to engine RPM?

   _____

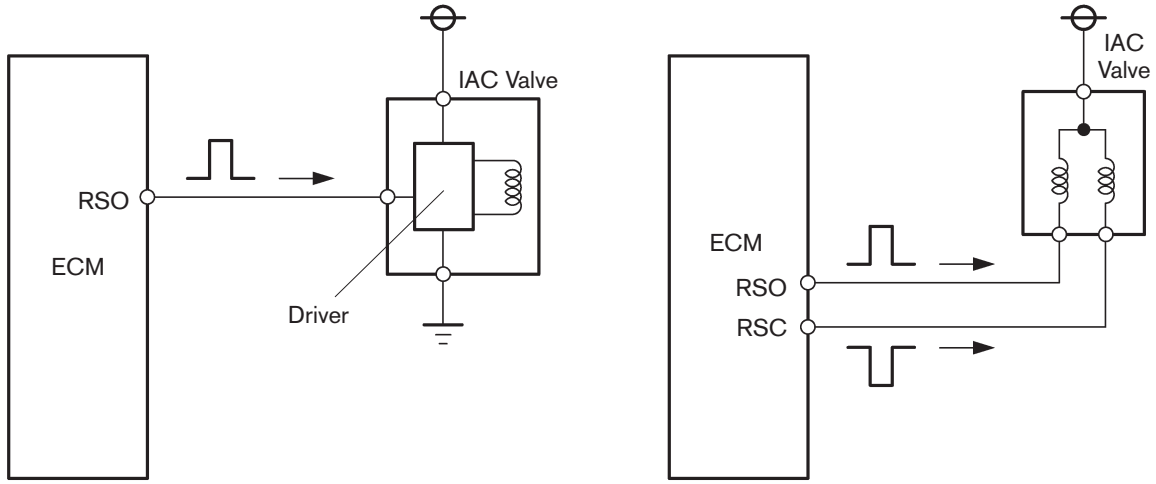

Types of Rotary Solenoid IACV

T852f268

Section 3

Using the Repair Manual, complete the following statements.

1. For the rotary solenoid with two driver circuits:

   Applying battery voltage to terminal +B and grounding the RSC terminal will cause the valve to

   _____

   Applying battery voltage to terminal +B and grounding the RSO terminal will cause the valve to

   _____

2. For the rotary solenoid with a single driver circuit:

   _____

   Applying battery voltage to terminal +B and grounding the RSO terminal will cause the valve to

   _____

Rotary Solenoid IACV System

Name _____ Date _____

Review this sheet as you are doing the worksheet. Check each category after completing the worksheet and instructor presentation. Ask the instructor if you have questions. The comments section is for you to write where to find the information, questions, etc.

Topic	*I have questions*	*I know I can*	Comment
Locate components in the IACV system using the EWD and RM			
Find wire colors, pin numbers in the fuel delivery electrical circuits using the EWD and RM			
Locate the IACV status in the Data List and compare to specifications to determine condition			
Activate RS IACV with Active Test			
Determine effect on IACV operation when there are engine problems			
Test RS IACV operation			
Check and retrieve relevant DTCs			
Locate in the RM two sections related to IACV system concerns			

Notes

Section 7

Electronic Throttle Control Systems

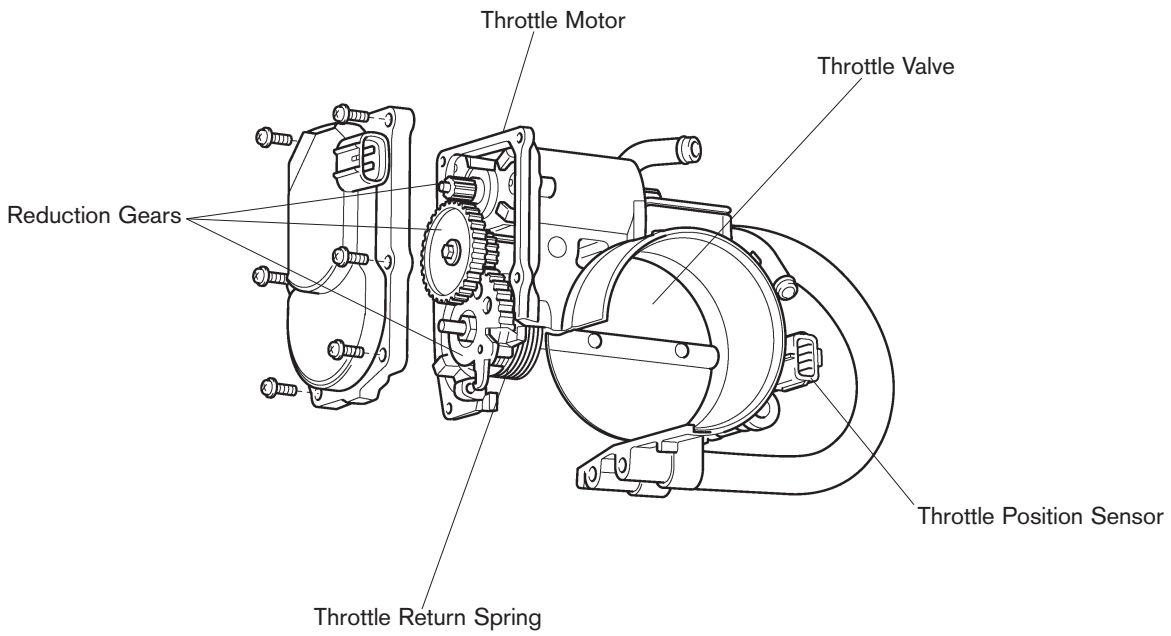

Lesson Objectives

1. Determine the condition of the ETCS-i system based on engine data
2. Determine the root cause of a failure(s) in the ETCS-i system using the appropriate diagnostic procedures

Notes

Electronic Throttle Control Systems

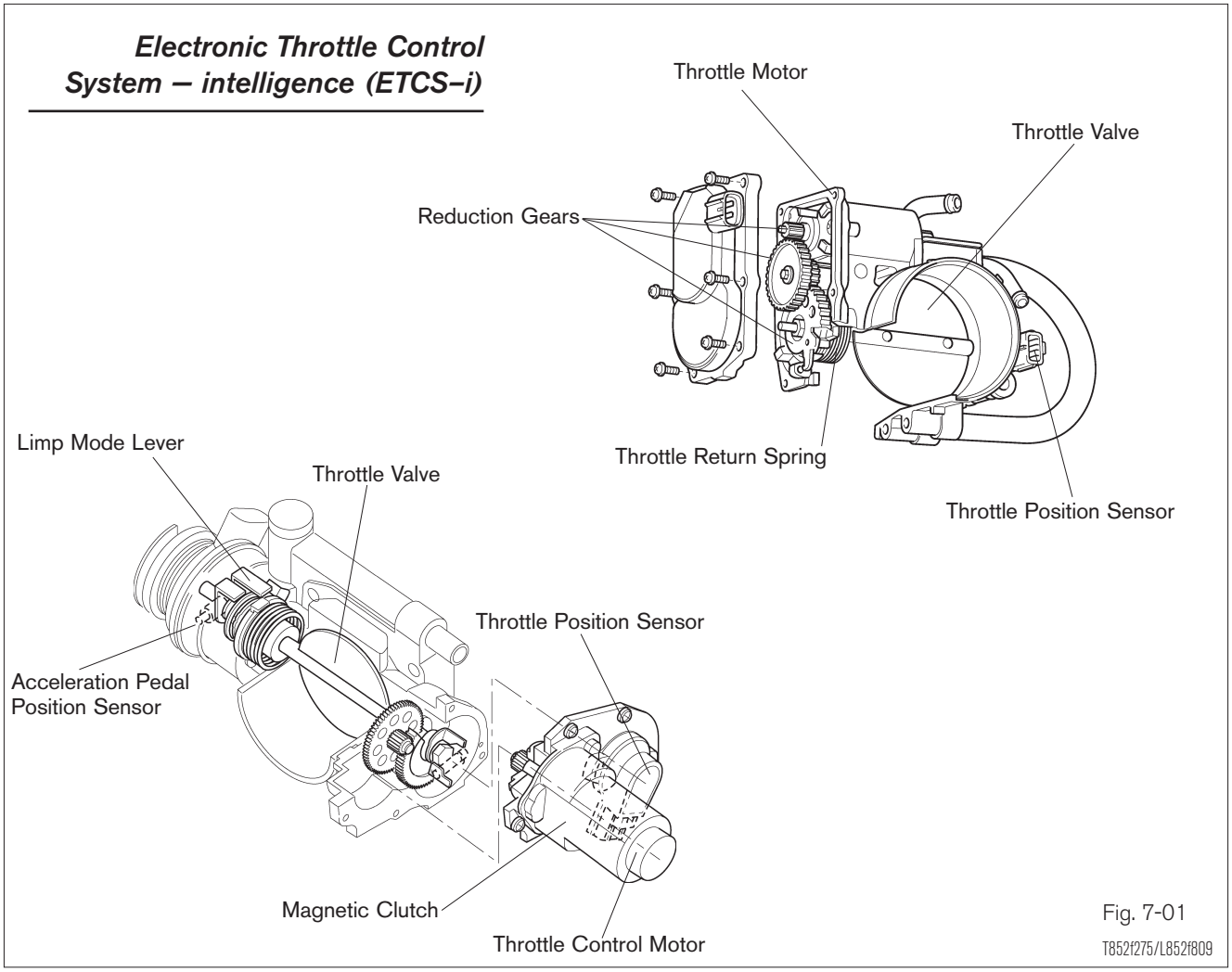

Fig. 7-01

Electronic Throttle Control Systems Overview

Electronic throttle control system-intelligence(ETCS-i) has several advantages over a mechanical linked throttle valve system because the ECM can position the throttle valve for optimum performance under a variety of conditions.

In a mechanical system, the ratio between the throttle valve angle and accelerator pedal position is fixed. This is not desirable under a variety of conditions. An ETCS-i equipped engine can change the relationship between the throttle valve angle and accelerator pedal position for optimum engine performance. For example, on vehicles equipped with Vehicle Skid Control (VSC), ETCS-i will adjust the throttle valve to maintain traction on acceleration.

With ETCS-i, the ISC system and cruise control functions are built into the system. There is no separate ISC or cruise control motor.

There are different versions of the ETCS-i. One version is called a link type system because there is a cable connected from the accelerator pedal to the throttle body.

Another version is called a linkless system because there is no mechanical connection from the accelerator pedal to the throttle body.

If the ECM detects an abnormal condition, the engine is put into Fail-Safe mode and the vehicle under limited power can get home. This is called the limp home feature. The following is an overview that is common to both systems.

ETCS-i Throttle Opening Rate

The relationship between the accelerator pedal angle and throttle valve opening angle changes with different modes.

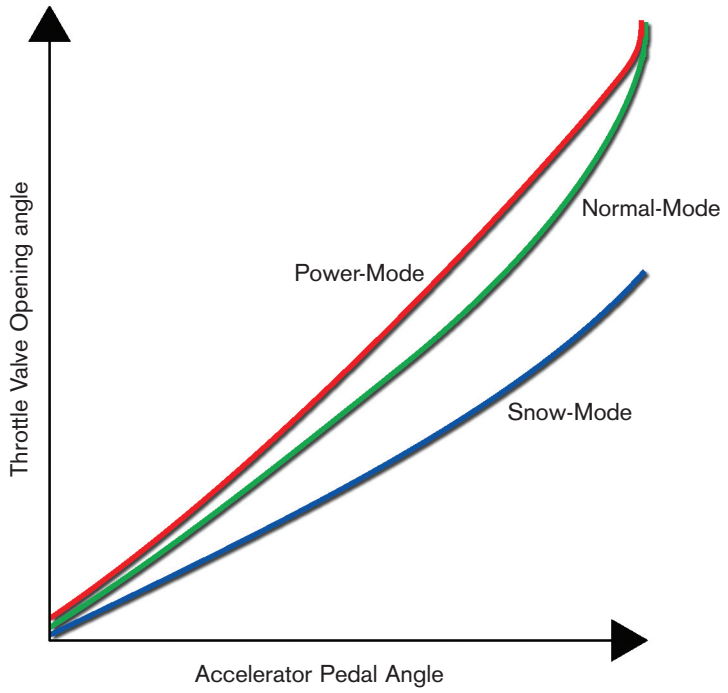

Fig. 7-02
T852810

ETCS-i Control Modes

The ECM drives the throttle valve to a specified angle as determined by operating conditions. Different throttle valve angles in relation to the accelerator pedal position are used to achieve different engine output characteristics. The following describes the different modes that affect throttle valve angles. Not all of the following modes are found on all ETCS-i equipped vehicles.

- **Non-linear Control** - Non linear control means the ECM can control the throttle valve opening rate and position based on such factors as accelerator pedal effort and engine output to achieve better performance and comfort.

- **Power-mode Control** - On vehicles equipped with a POWER switch, turning this switch on causes the ECM to increase the ratio of accelerator pedal position to throttle valve angle. The increase engine output in relation to accelerator pedal position.

- **Snow-mode Control** - When slippery conditions are anticipated, the driver can turn on the SNOW switch. This will decrease the throttle valve opening in proportion with the accelerator pedal position. With the SNOW switch on, engine output is reduced in relation to accelerator pedal position. This will in vehicle stability and tire traction.

- **Shift Shock Reduction Control** - The throttle control is synchronized to the Electronically Controlled Transmission control during the shifting of the transmission to reduce the shift shock.

- **Idle Speed Control** - The ECM adjusts the throttle opening to maintain the target idle speed.

- **TRAC Throttle Control** - As part of the TRAC system, the throttle valve is closed by a demand signal form the ABS, TRAC, and VSC ECU if an excessive amount of slippage is occurring at the driving wheel.

- **VSC Coordination Control** - VSC performance is enhanced when the throttle valve opening angle is modified by the ABS, TRAC, and VSC ECU's.

- **Cruise Control** - ETCS-i eliminates the need for a separate cruise control system. Cruise control strategies and functions are incorporated into the ECM.

ETCS-i Throttle Motor Circuit Operation

The ECM controls the direction and amount of current needed to activate the throttle control motor to adjust throttle valve position. The throttle motor can be in any one of the following five modes.

- Default position
- Throttle closing
- Throttle opening
- Throttle hold
- Idle speed control

This circuit consists of two transistors on the MO and MC wires. One transistor supplies power and the other transistor completes the path to ground. This configuration allows the ECM to control the direction of current through the motor.

This circuit is also pulsewidth modulated to control the rate of throttle movement and to hold the throttle in a given position. For rapid throttle opening, the pulse width duty ratio will be high(current flow high) for rapid movement.

To hold the throttle in the desired position, the ECM applies enough current to oppose spring pressure.

If the traction control mode is engaged, the pulsewidth will be less, limiting the rate of opening from idle. If the throttle valve is opened too far, the ECM will decrease the pulsewidth closing the throttle.

Default Position

When there is no current applied to the motor, the springs hold the throttle valve in the default position. This condition occurs when the engine ignition key is off or when the ECM has detected a failure in the ETCS-i system. In this state, the idle is higher than normal when the engine is at operating temperature.

Throttle Closing

Current flows from the MC to the MO terminal. The MC supply transistor and the MO ground transistor are turned on. The rate the throttle valve closes is a combination of spring tension, pulsewidth duration, and direction of current flow. To further close the throttle valve after the default position, current must flow as shown in the drawing.

Throttle Closing

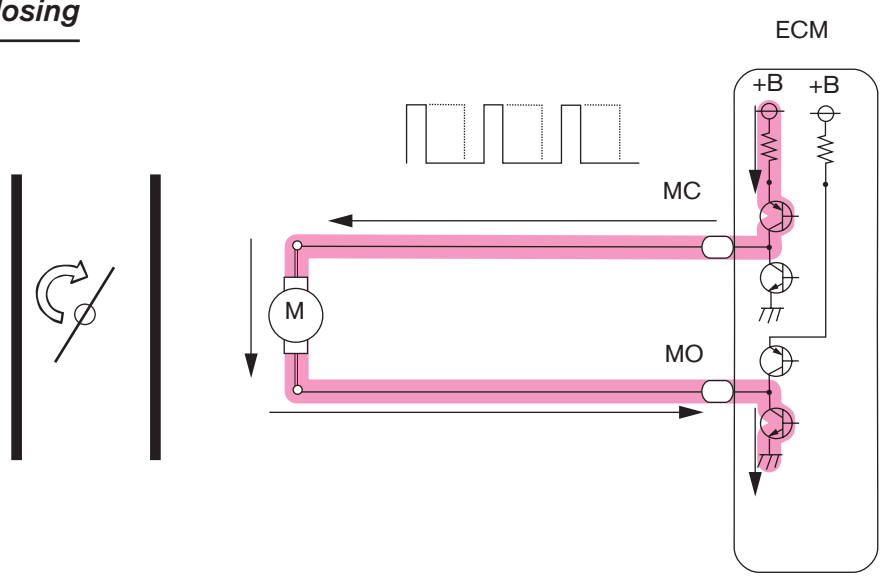

Fig. 7-03

T852f279

Throttle Opening Above the default position, the MO supply transistor and MC ground transistor are turned on allowing current to flow from MO to MC terminals. Below the default position, the current flow direction is the same as in the throttle close operation, but the pulsewidth is decreased and in combination with spring tension, the throttle valve opens.

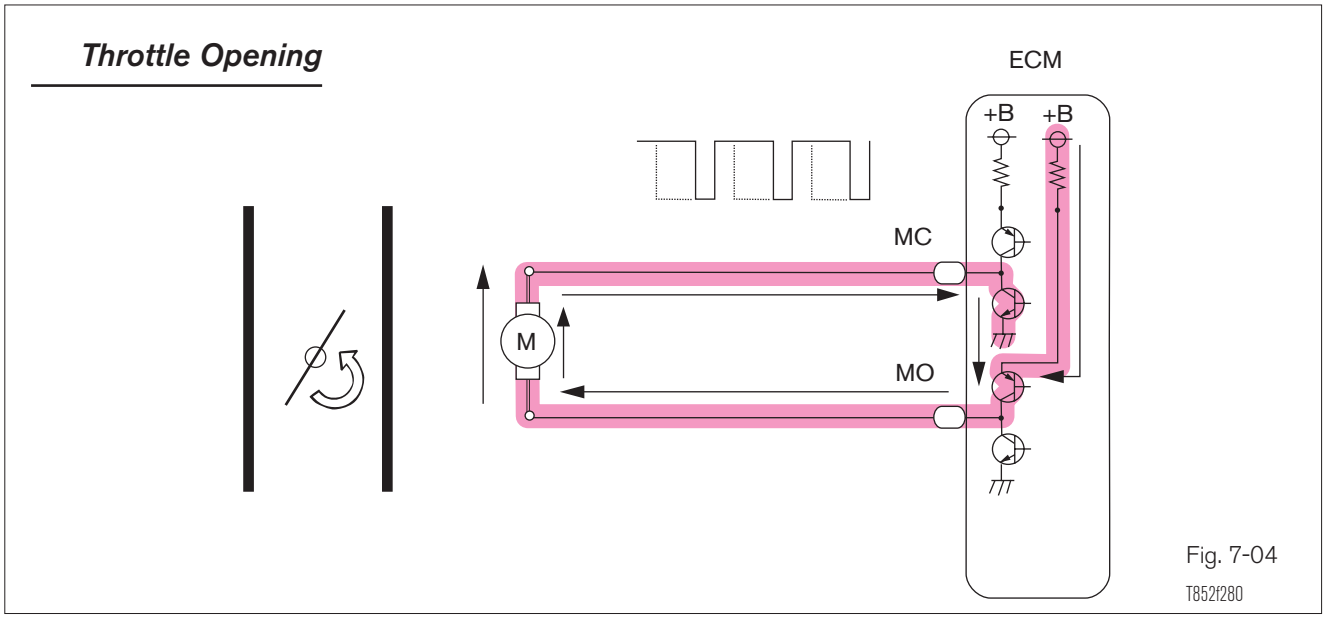

Fig. 7-04

Throttle Hold To maintain the desired throttle valve angle, the applied duty ratio creates enough force in motor to oppose spring pressure.

Idle Speed Control The throttle valve is adjusted to maintain the desired idle speed. If the desired idle speed needs the throttle valve below the default position, the throttle close circuit is activated. Any decrease in duty ratio will open the throttle valve and raise engine RPM. If the desired idle speed needs the throttle valve above the default position, the throttle open circuit is activated.

ETCS-i Link Type System Operation

The throttle motor operates the throttle valve as described previously. An electromagnetic clutch connects the throttle motor to the throttle valve. The throttle position sensor detects throttle valve angle. The accelerator pedal position sensor detects accelerator pedal position. The throttle lever is connected by cable to the accelerator pedal. As the driver moves the accelerator pedal the APPS signal voltage changes indicating a new pedal position. The ECM then adjusts the throttle angle based on the APPS signals, engine conditions, and vehicle conditions. Later versions used a thermostat to keep the throttle body at the proper temperature.

ETCS-i Overview

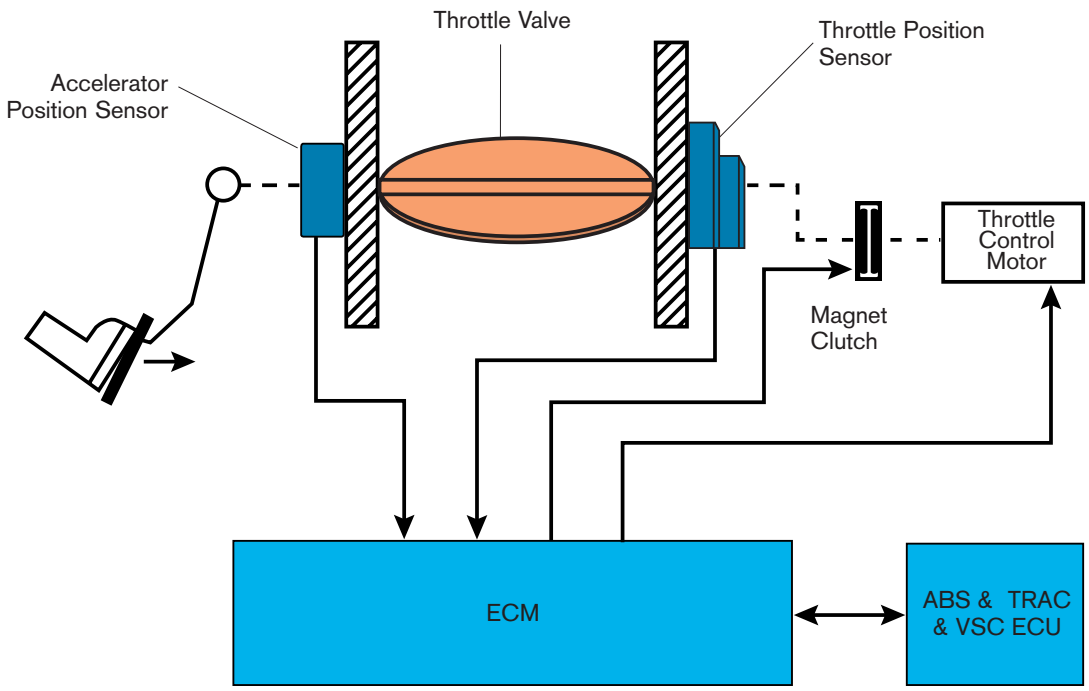

Fig. 7-05

T852f276

Thermostat

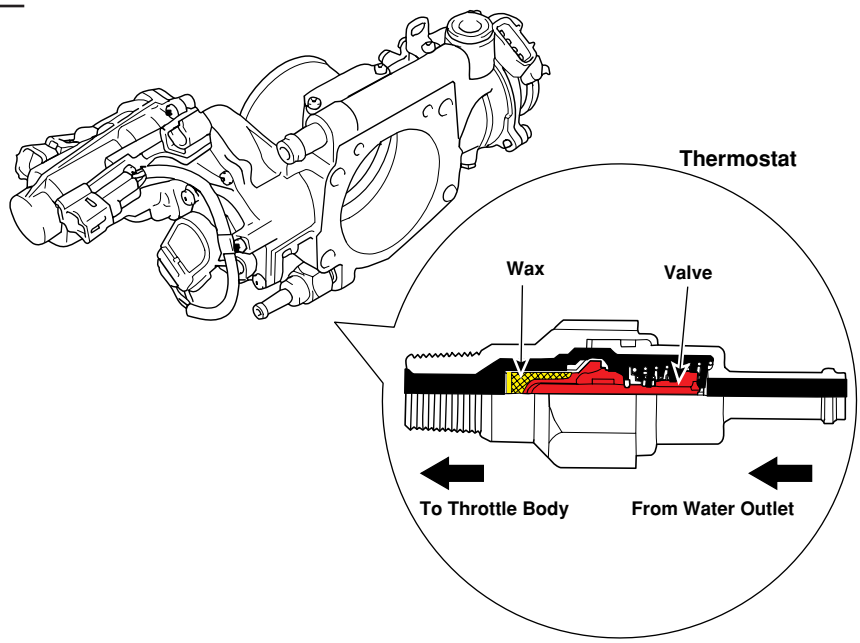

Fig. 7-06
T8521277

ETCS-i Link Type System Component Operation

The following is description on the function of the major components.

- **Acceleration Pedal Position Sensor (APPS)** - The APPS, which is mounted on the throttle body, is integrated with the throttle lever. The throttle lever is connected by cable to the accelerator pedal. As the driver moves the accelerator pedal the APPS signal voltage changes indicating pedal position. There are two voltage output signals from the APPS. The ECM uses these two signals to calculate the desired throttle valve angle. Also, by using two signals the ECM is able to compare and detect if there is anything wrong with the APPS's performance.

- **Throttle Position Sensor** - The TPS is used to detect the actual angle of the throttle valve. This signal indicates to the ECM throttle valve position and that the throttle valve moved to the desired angle. Throttle valve position detection is necessary for the ECM to make adjustments to the throttle valve position and to detect if there is a failure in the system.

- **Throttle Control Motor** - The throttle control motor is a DC motor controlled by the ECM. The ECM controls the direction and the amperage of the current through the motor. The circuit is pulsewidth modulated(duty cycle regulated). If there is a malfunction in the system, the ECM shuts the circuit (and clutch circuit) off and the return springs return the throttle to the default position. The ECM will turn the motor off if there is excessive amperage or not enough amperage in the motor circuit.

- **Magnetic Clutch** - Under normal operation, the magnetic clutch connects the throttle control motor to the throttle valve. The circuit is pulsewidth modulated reducing power consumption. If there is a malfunction that will put the ETCS-I into Fail-Safe, the ECM will turn off the clutch circuit disengaging the motor from the throttle valve. If the ECM detects too much or not enough amperage in the circuit, the ECM will turn off the clutch.

- **Thermostat** - A thermostat is installed on some throttle bodies to shut off the flow of coolant when coolant temperature is high. This prevents the throttle body from heating up the intake air reducing performance. The thermostat uses a wax expansion valve to open and close the coolant passage.

Fail Safe Mode Link Type

If an abnormal condition occurs with the ETCS-i, the MIL will illuminate to alert the driver. At the same time, current to the throttle control motor and magnetic clutch are cut off. With no power to the motor or magnetic clutch, the return spring returns the throttle valve to the default position. In this situation, called limp mode, the accelerator pedal operates the limp mode lever. When in limp mode, the throttle can only be partially opened reducing engine power. The driver will notice the pedal travel is longer in relation to engine response and that the MIL is on. Furthermore, ISC and cruise control functions will not operate.

ETCS-i Linkless Type System

There is no mechanical link or electromagnetic clutch with this system.

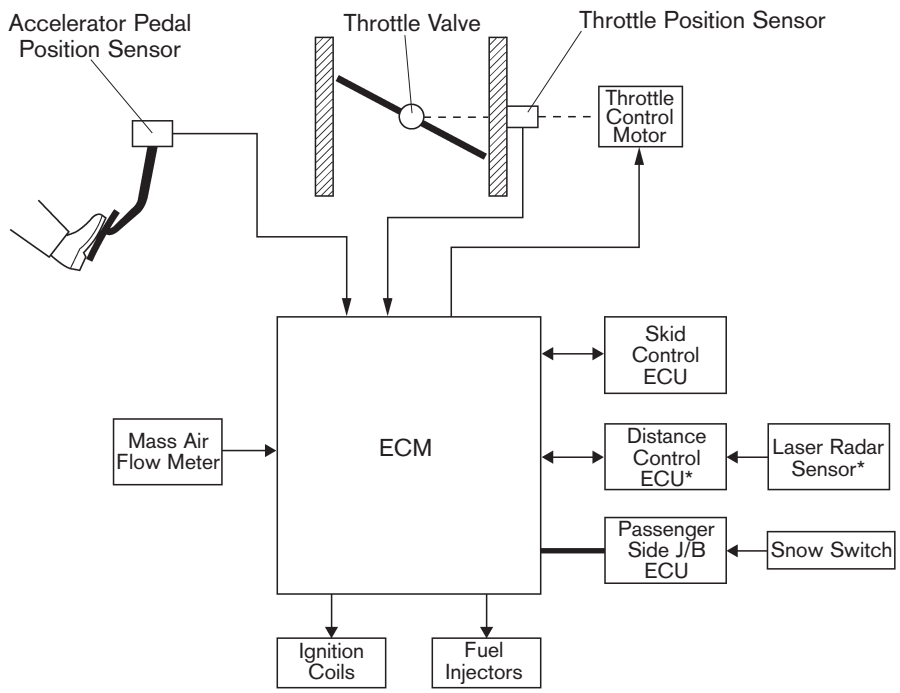

Fig. 7-07

*with Laser Cruise Control

L852f811

ETCS-i Linkless Type System Operation

The linkless ETCS-i uses a compact throttle body with no mechanical connection between the accelerator pedal and throttle body. The accelerator pedal position sensor is mounted at the accelerator pedal. As the driver moves the accelerator pedal the APPS signal voltage changes indicating a new pedal position. The ECM then adjusts the throttle angle based on the APPS signals, engine conditions, and vehicle conditions. The throttle position sensor detects throttle valve angle.

This system does not use a magnetic clutch. Operation of this system is nearly identical to the link type.

ETCS-i Linkless Type System Component Operation

The following is description on the function of the major components.

- **Acceleration Pedal Position Sensor (APPS)** - The APPS is mounted at the accelerator pedal. As the driver moves the accelerator pedal the APPS signal voltage changes indicating pedal position.There are two voltage output signals from the APPS. The ECM uses these two signals to calculate the desired throttle valve angle. By using two signals the ECM is able to compare and detect if there is anything wrong with the APPS's performance. See Fail-Safe Mode Linkless Type for more information.

- **Throttle Position Sensor** - The TPS is used to detect the actual angle of the throttle valve. This signal indicates to the ECM throttle valve position and that the throttle valve moved to the desired angle. Throttle valve position detection is necessary for the ECM to make adjustments to the throttle valve position and to detect if there is a failure in the system. See Fail-Safe Mode Linkless Type for more information.

- **Throttle Control Motor** - The throttle control motor is a DC motor controlled by the ECM. The ECM controls the direction and the amperage of the current through the motor. The circuit is pulsewidth modulated(duty cycle regulated). If there is a malfunction in the system, the ECM shuts the circuit off and the return springs return the throttle to the default position. The ECM will turn the motor off if there is excessive amperage or not enough amperage in the motor circuit.

Fail Safe Mode 3UZ-FE Linkless Type

There are three different Fail-Safe modes with this system.

- **Fail-Safe Mode APPS Single Circuit Failure** - If either the main or sub Accelerator Pedal Position circuits should fail, the ECM provides an active throttle range from idle to approximately twenty-five percent of maximum throttle opening. The driver will notice distinct loss in power, but has limited control of engine RPM.

Fail-Safe Mode APPS Single Circuit Failure

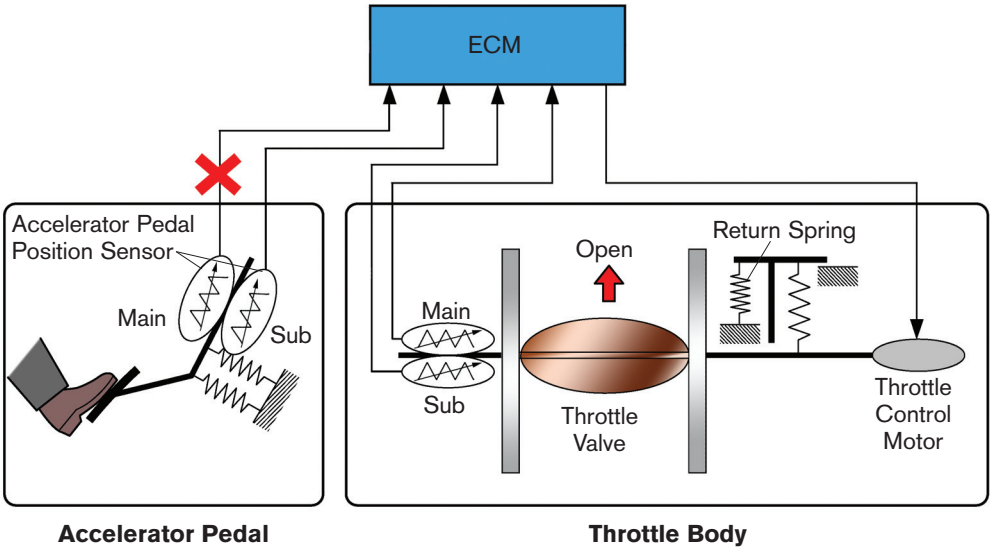

Fig. 7-08

L852f812

- **Fail-Safe Mode APPS Dual Circuit Failure** - If the ECM detects a failure in both circuits of the Accelerator Pedal Position Sensor current to the throttle motor is turned off, and the force of the return spring causes the throttle valve to return and stay at a fixed (default) position. In this state, engine RPM is fixed. The driver has no control over engine RPM, but the vehicle will run allowing the vehicle to limp home.

Fail-Safe Mode
APPS Dual Circuit Failure

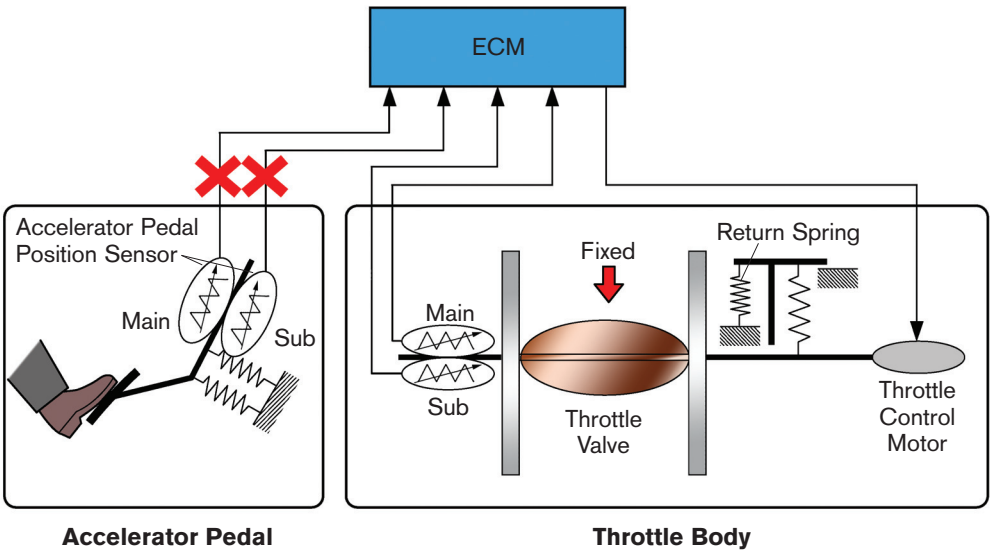

Fig. 7-09
L852f812

- **Fail-Safe Mode TPS Circuit Failure** - Any failure of either of the TPS main and sub circuits causes the ECM to turn off the throttle control motor and the throttle valve is then held in a fixed (default) position by the return spring. But in this mode, engine RPM is regulated by controlling fuel injection and ignition timing according to the APPS signals. The driver will notice a distinct loss in power, but has limited control of engine RPM.

Fail-Safe Mode TPS Circuit Failure

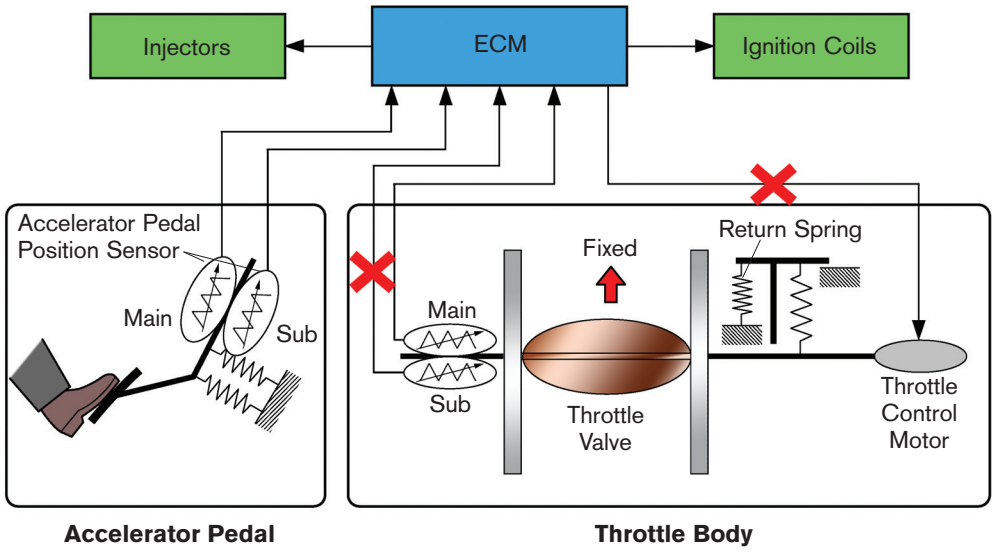

Fig. 7-10
L852f812

Diagnosis

The diagnostic procedures for both systems are nearly identical. All ETCS-i DTCs are one trip DTCs. Retrieve the DTCs and follow repair manual procedures. The following is a general overview.

APPS

There are minor circuit variations with different APPSs. The circuits are checked by comparing voltage output to pedal position.

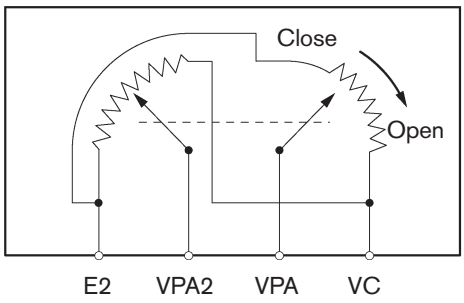

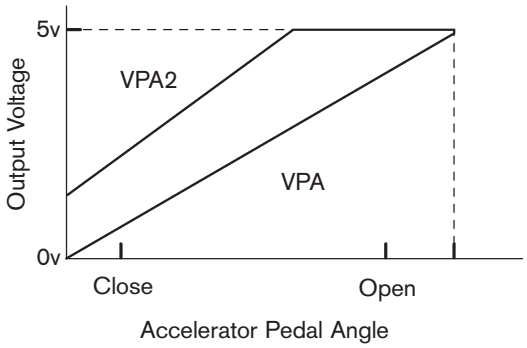

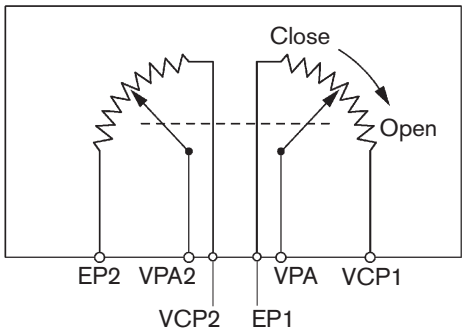

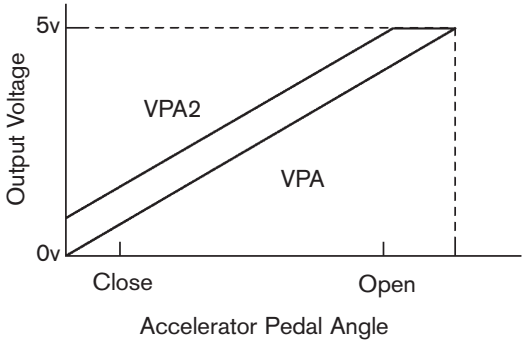

Accelerator pedal postion expressed as voltage				Trouble area
Accelerator pedal released		Accelerator pedal depressed		
ACCEL POS#1	ACCEL POS#2	ACCEL POS#1	ACCEL POS#2	
0V	0V	0V	0V	VC circuit open
0V	0.9V - 0.3V	0V	3.4 - 5.0V	VPA circuit open or ground short
0.5 - 0.1 V	0V	3.0 - 4.6V	0V	VPA2 circuit open or ground short
0V	0V	0V	0V	E2 circuit open

Fig. 7-11
T852f281/L852f815
L852f816/L852f813

TPS

The main and sub TPS circuits are checked by comparing voltage output to pedal position. If the TPS needs to be replaced, it must set according to the repair manual.

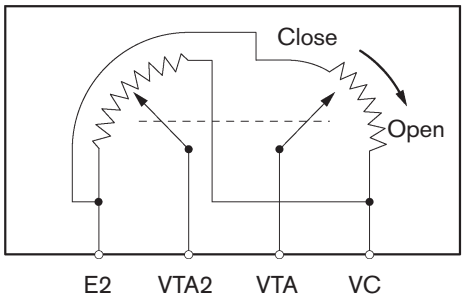

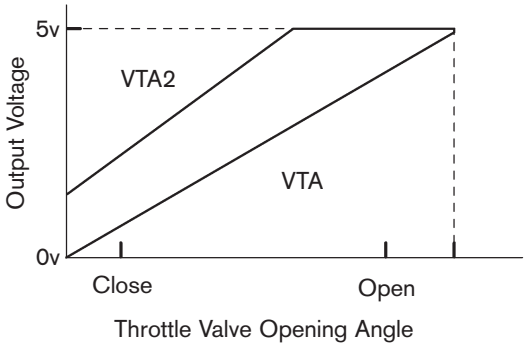

Accelerator pedal postion expressed as percentage and voltage				Trouble area
Accelerator pedal released		Accelerator pedal depressed		
THROTTLE POS#1	THROTTLE POS#2	THROTTLE POS#1	THROTTLE POS#2	
0%	0V	0%	0V	VC circuit open
0%	2.0 - 2.9V	0%	4.6 - 5.1V	VTA circuit open or ground short
8 - 20%	0V	64 - 96%	0V	VTA2 circuit open or ground short
100%	5V	100%	0V	E2 circuit open

Fig. 7-12
T852f281/L852f814

Throttle Motor

The throttle motor control circuit operational check is performed with an oscilloscope. The RM provides the waveform when connected to the M+ or M- terminal. The waveform will vary with a change in throttle angle. An ohmmeter is used to check the resistance of the motor coils.

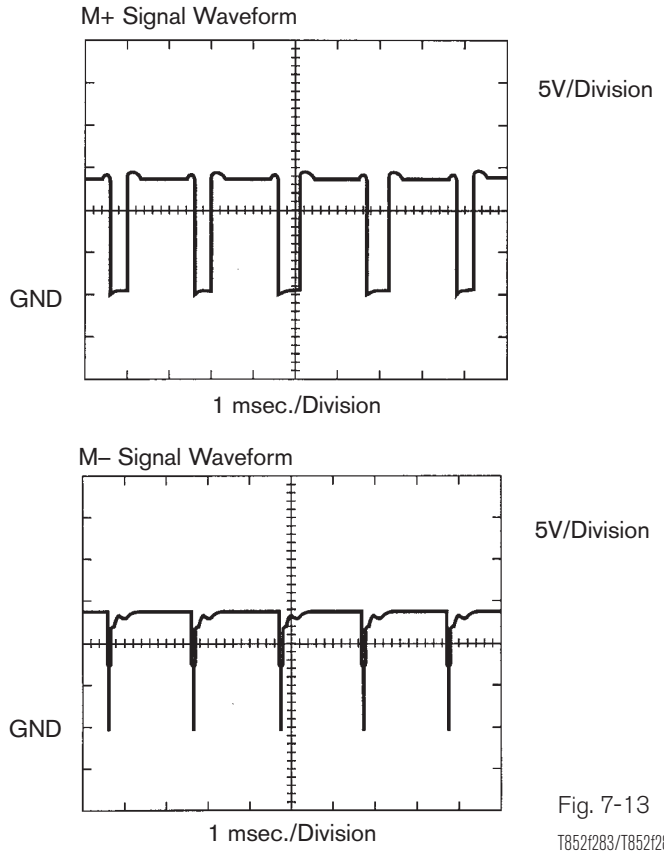

Fig. 7-13
T852f283/T852f282

Electromagnetic Clutch Circuit

Like the throttle control circuit, the clutch circuit is checked with an oscilloscope. A normally operating circuit will be a square wave. An ohmmeter is used to check the resistance of the clutch coil.

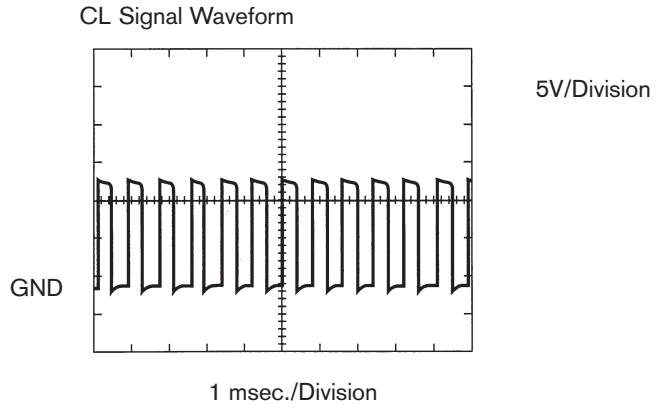

Fig. 7-14
T852f284

Notes

WORKSHEET 7–1
ETCS-i System

Vehicle	Year/Prod. Date	Engine	Transmission

Technician Objectives

With this worksheet, you will learn to test ETCS-i systems using the required tools and equipment, retrieve and apply the needed service information, retrieve and interpret service data information.

Tools and Equipment

- Vehicle Repair Manual
- Vehicle EWD
- Diagnostic Tester & DVOM
- Hand Tool Set

Section 1

Throttle Control Motor

1. Connect the Diagnostic Tester Auto probe to the throttle motor circuit according to the Repair Manual. Start the engine and raise engine to approximately 1000 RPM. Draw or print the waveform.

2. Does the waveform match the Repair Manual waveform?

_____

3. Raise engine RPM to 2000. What happened to the waveform and frequency? Draw the pattern.

_____

Throttle Clutch (Link Type Only)

1. Connect the Diagnostic Tester Autoprobe to the ETCS-i clutch circuit. Set the Diagnostic Tester to the Oscilloscope function, according to the RM. Connect DVOM to DC volts, Hz.
2. Start the engine and at idle RPM note the waveform.
3. Does the waveform match the Repair Manual waveform?

_____

4. Draw or print the waveform.

5. What is the frequency?

_____

6. Raise engine RPM to 2000. What happened to the waveform and frequency?

_____

Go to ETCS-i DATA LIST. Record the following at:

	Idle	1700 RPM	What parameters changed and why?
Parameter Name	DATA	DATA	
ACCEL POS #1			
ACCEL POS #2			
THROTTLE POS #2			
THROTTLE TARGET			
THROTL OPN DUTY			
THROTL CLS DUTY			
THROTTLE MOT			
ETCS MAG CLUTCH*			
+BM			
ACCEL IDL POS			
THROTTLE IDL POS			
FAIL #1			
FAIL #2			
THROTTL INITIAL			
ACCEL LEARN VAL			
THROTTLE MOT			
ETCS MAG CLUTCH*			

*If equipped

Notes

Name _____ Date _____

Review this sheet as you are doing the worksheet. Check each category after completing the worksheet and instructor presentation. Ask the instructor if you have questions. The comments section is for you to write where to find the information, questions, etc.

Topic	*I have questions*	*I know I can*	Comment
Locate components in the ETCS-i system using the EWD and RM			
Find wire colors, pin numbers in the fuel delivery electrical circuits using the EWD and RM			
Locate the ETCS-i Data List and compare to specs. to determine condition			
Test throttle control motor with oscilloscope			
Test clutch with oscilloscpe			
Check and retrieve relevant DTCs			
Check and retrieve relevant DTCs			
Locate in the RM two sections related to ETCS-i system concerns			

Notes

Variable Valve Timing & Acoustic Control Induction Systems

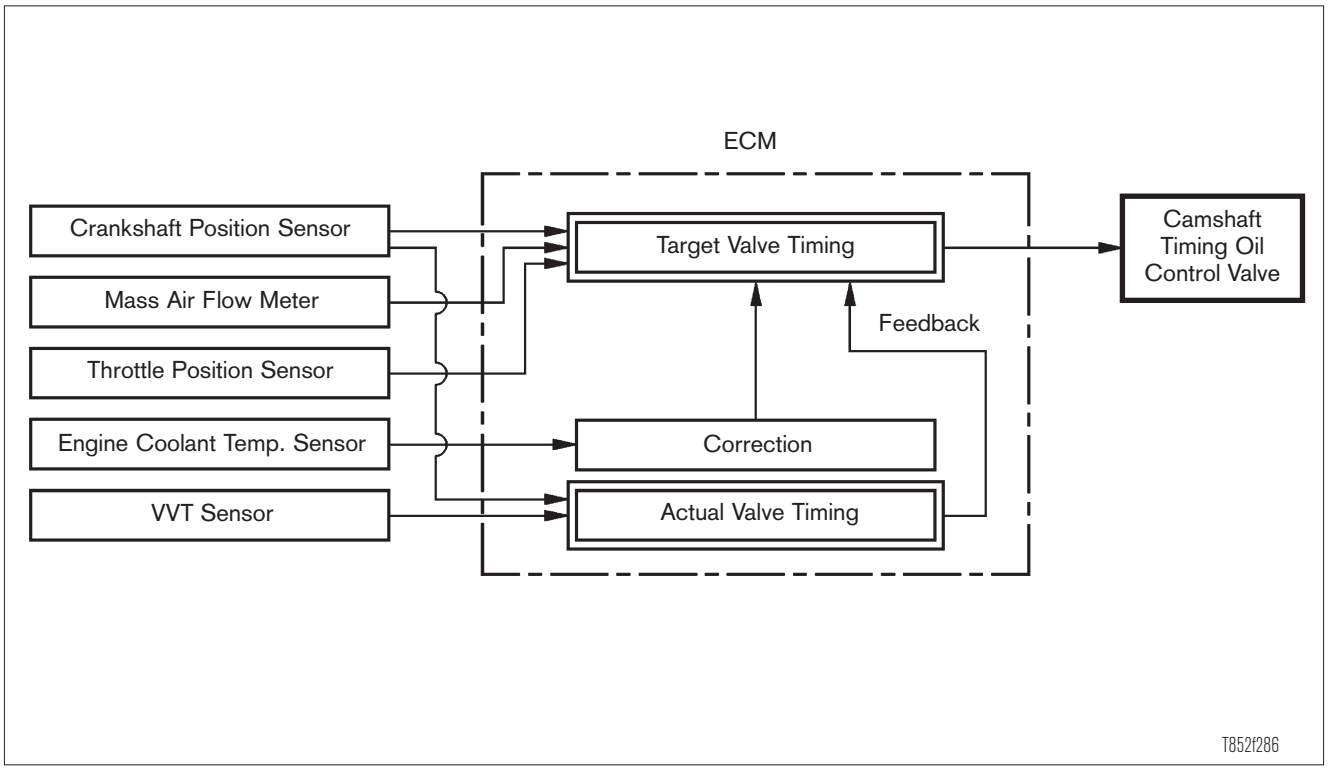

Lesson Objectives 1. Familiarity with the VVT-i systems and ACIS systems operation

Notes

Variable Valve Timing & Acoustic Control Induction Systems

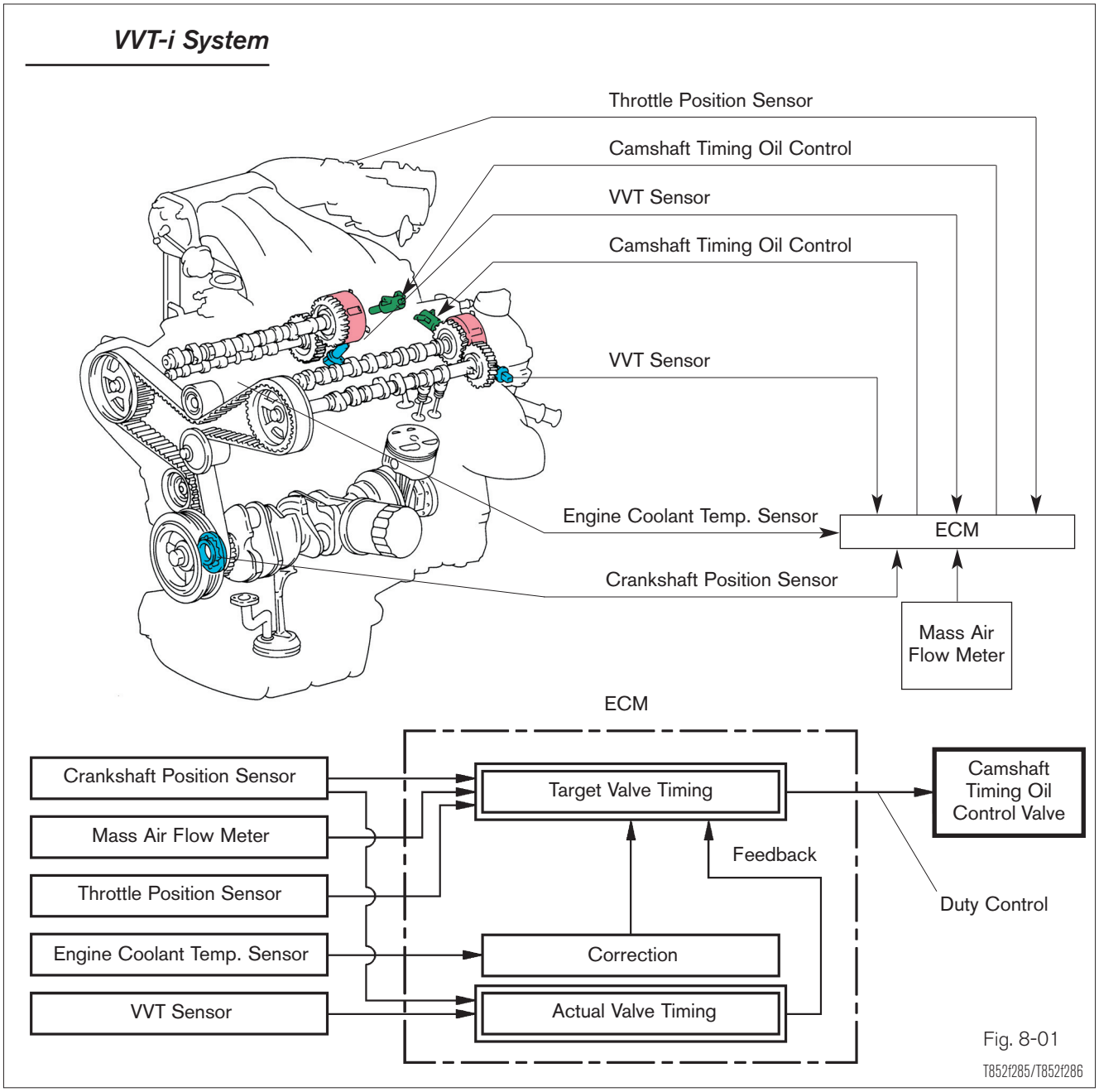

Fig. 8-01

T852f285/T852f286

Variable Valve Timing Systems

Without variable valve timing, engine valve timing is a compromise between the needs to produce maximum torque (horsepower) at low to medium speeds, idle stability, fuel economy, low emissions, and maximum horsepower output. Continuously adjusting when the valves open and close, called variable valve timing, yields significant improvements in all these areas. The ECM, according to driving conditions such as the engine speed and load, will advance or retard the camshaft, changing when the valves open and close. This system is called the Variable Valve Timing-intelligent (VVT-i) system.

VVT-i Range

The G signal represents the movement of the camshaft in degrees in relation to the crankshaft.

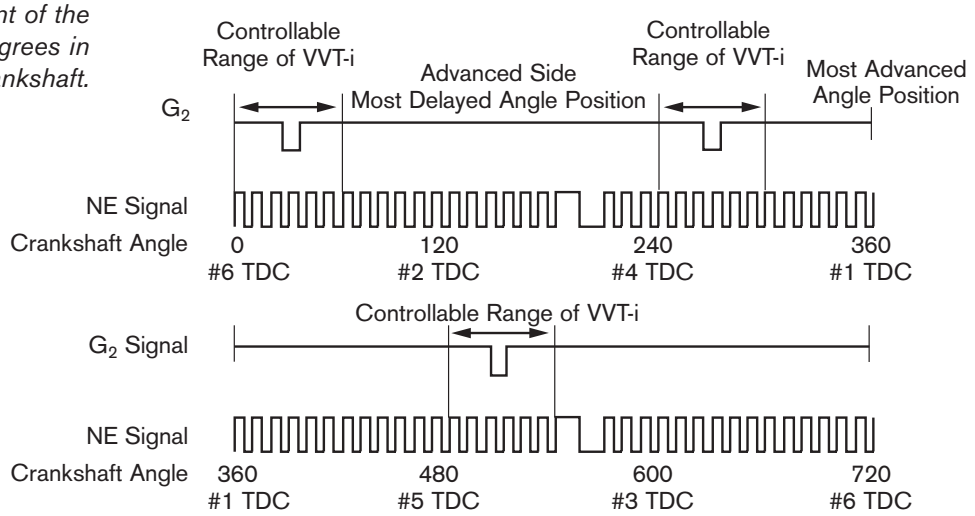

Fig. 8-02

Phase Relationship Between G_2 and NE Signal

T852f287

Components of VVT-i

VVT-i uses the crankshaft position sensor and Variable Valve Timing (VVT) sensors (camshaft position sensor) to measure the amount of camshaft movement. This feedback is necessary for the ECM to know how much and which direction to move the camshaft, and for diagnosis.

A continuously variable valve timing mechanism, called a controller or actuator, is used to adjust the camshaft from the starting stage to the high speed traveling state.

A camshaft timing Oil Control Valve (OCV), controlled by the ECM, directs engine oil pressure to the advance or retard side of the VVT-i controller.

Effect of Continuous Valve Timing Changes

Smooth Idle - At idle rpm, valve overlap is eliminated by retarding the camshaft. With the intake valve opening after the exhaust valve has closed, there is no blow back of exhaust gases to the intake side. Now, combustion is more stable because of the clean air/fuel mixture. This allows the engine idle smoothly at a lower rpm and fuel consumption is reduced.

Torque Improvement in Low to Medium Speed Range - In the low to medium speed range with a heavy load, the camshaft is advanced increasing the valve overlap. This has two effects. First, the exhaust gases help pull in the intake mixture. Second, by closing the intake valve early, the air/fuel mixture taken into the cylinder is not discharged.

This improves volumetric efficiency and increases torque (and therefore horsepower) in the low and midrange rpm range. The driver notices a more powerful acceleration.

EGR Effect - VVT-i eliminates the need for an EGR valve. As a result of increasing the valve overlap in which the exhaust and intake valves are both open, the exhaust gas is able to flow to the intake side. Diluting the air/fuel mixture with exhaust gases reduces the combustion temperature and the production of NO_x. Also, some of the unburned air/fuel mixture present in the exhaust gas will be burned.

Better Fuel Economy - A VVT-i equipped engine is more efficient and provides better fuel economy from a variety of factors. Without VVT-i, the engine would have to be larger and heavier to produce the same horsepower. Smaller pistons, connecting rods, and crankshaft reduce friction and mechanical losses. A lighter engine improves vehicle fuel economy.

Improved fuel consumption is also realized because of the further reduction in the intake stroke resistance. In the medium-load operation range, when the valve overlap is increased, the vacuum (negative pressure) in the intake manifold is reduced. Now, it takes less energy to move the piston downward on the intake stroke. With the pumping loss reduced during the intake stroke, more energy is available to propel the vehicle.

At idle, with no valve overlap, the idle speed is lower improving fuel economy.

Improved Emission Control Performance - In the light-medium load operation range, VVT-i increases the valve overlap creating an internal EGR effect. By opening the intake valve earlier in the exhaust stroke at a lower RPM allows the exhaust gases to push into the intake manifold mixing with the fresh air. The return of exhaust gas into the cylinder lowers the combustion temperature, resulting in NO_x reduction. Essentially, VVT-i will increase the valve overlap to obtain the same EGR effect as an engine equipped with an EGR valve. In other words, when an EGR valve on an EGR equipped engine opens is when VVT-i will increase the valve overlap.

Another benefit is that HCs are also reduced. Some of the unburned air/fuel mixture from the previous cycle returns to the cylinder for combustion. Finally, $C0_2$ is reduced because of the decrease in fuel consumption.

Oil Control Valve (OCV)

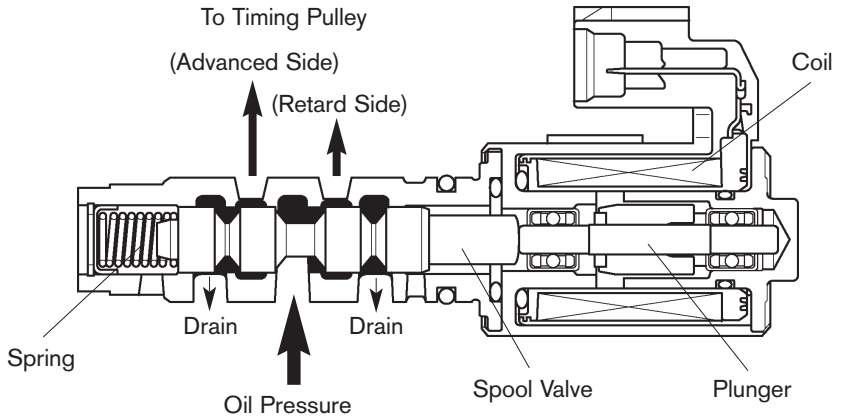

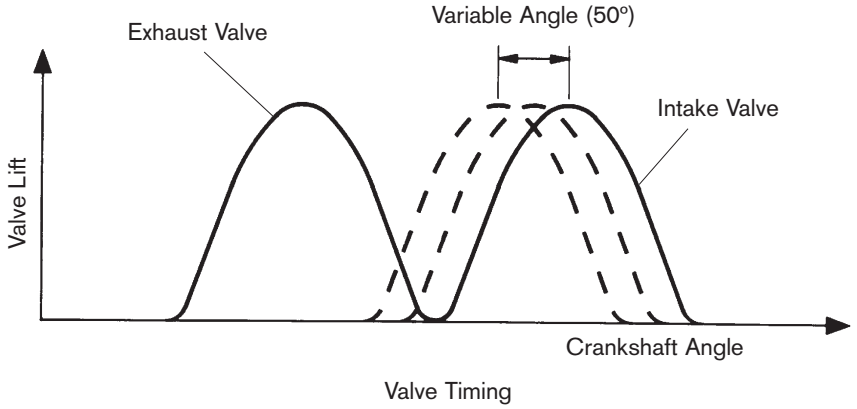

Fig. 8-03

T852f288/T852f289

Operation Camshaft Timing Oil Control Valve

The Camshaft Timing Oil Control Valve (OCV), controlled by the ECM, directs engine oil pressure to the advance or retard side of the VVT-i controller. The spool valve position is determined by the magnetic field strength opposing the spring. As the ECM increases the pulsewidth (duty ratio), the magnetic field moves the spool valve overcoming spring pressure and directing more oil to the advance side. To retard the timing, the ECM decreases the pulsewidth, and spring pressure moves the spool valve towards the retard position. When the desired camshaft angle is achieved, the ECM will generate a pulsewidth signal to move the spool valve to hold position. In the hold position, the oil is trapped in the controller maintaining the desired angle. When the engine is stopped, the spring pushes the spool valve to the most retarded state.

VVT-i Controller Assembly

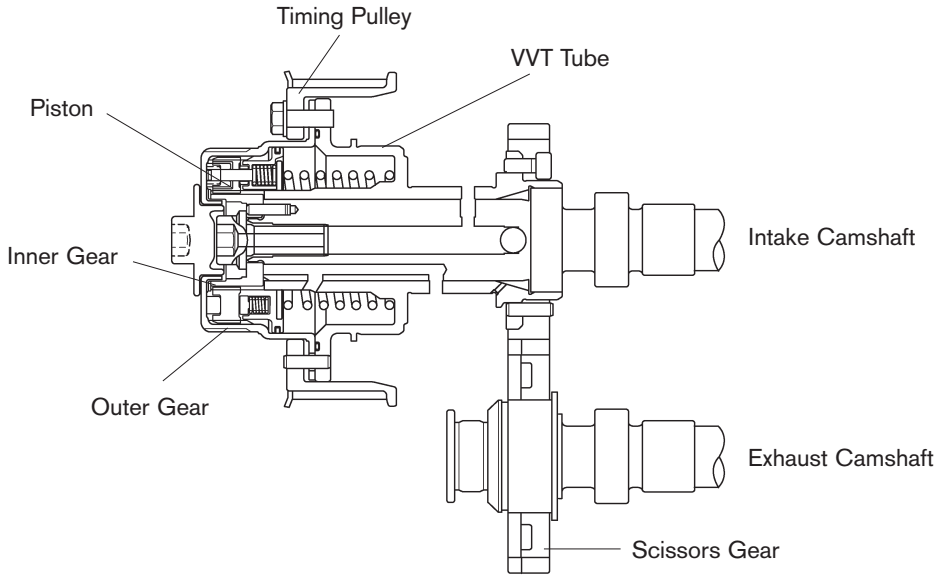

Fig. 8-04

T852f290

VVT-i Controller

The helical splines force the camshaft to advance or retard in relation to the timing pulley.

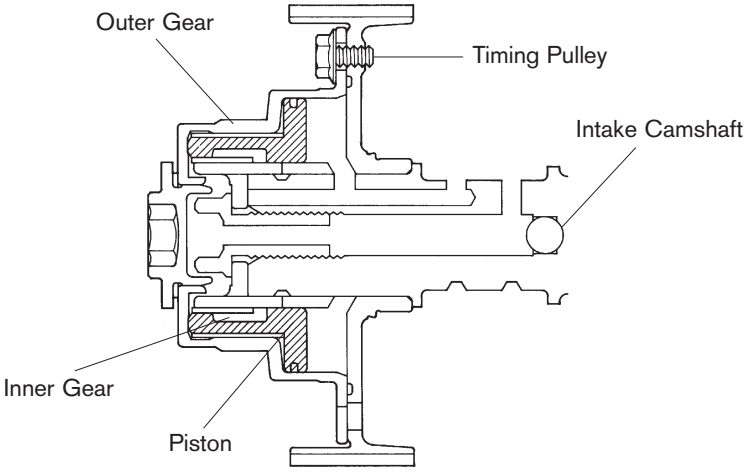

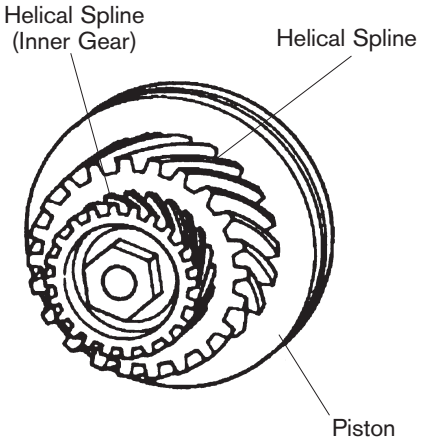

Fig. 8-05

T852f291/T852f292

VVT-i Controller (Helical Type) Operation

This VVT-i controller comprises of an outer gear driven by the timing belt, an inner gear affixed to the camshaft, and a movable piston that is placed between the outer gear and inner gear. As the piston moves laterally (axially), the helical splines on the piston and inner gear force the camshaft to move in relation to the timing gear.

Advance

By the command of the ECM, when the OCV is in the position shown, hydraulic pressure is applied from the left side of the piston, which causes the piston to move to the right. Because of the twist in the helical splines on the inside diameter of the piston, the intake camshaft rotates in the advance direction in relation to the camshaft timing pulley.

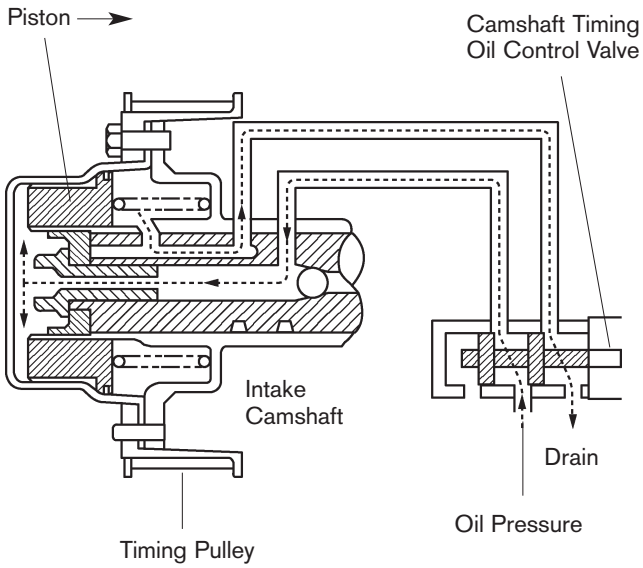

Fig. 8-06

T852f293

Retard

When the OCV is in the position shown, the piston moves to the left and rotates the camshaft in the retard direction.

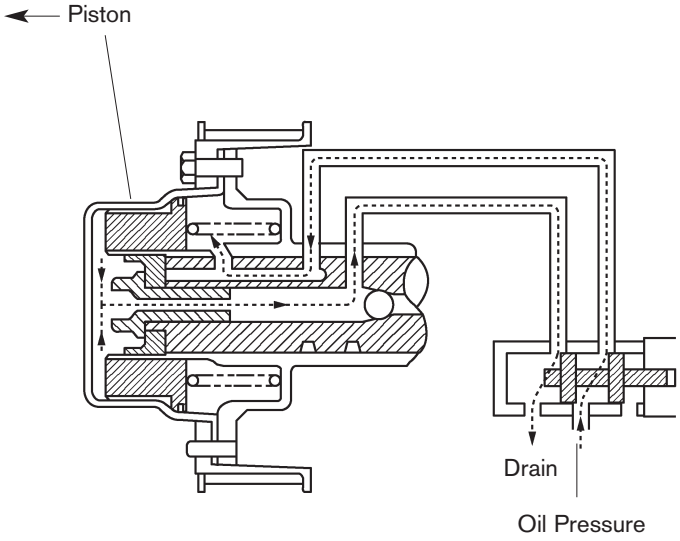

Fig. 8-07

T852f294

Hold

To hold to the desired position, the OCV shuts off the oil passages to maintain the hydraulic pressure at both sides of the piston, thus maintaining that position.

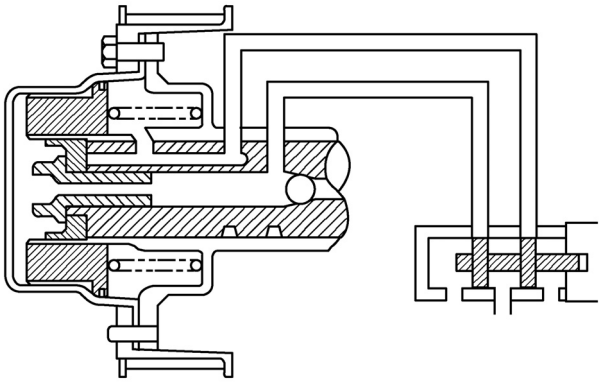

Fig. 8-08

T852f295

VVT-i Actuator (Vane Type)

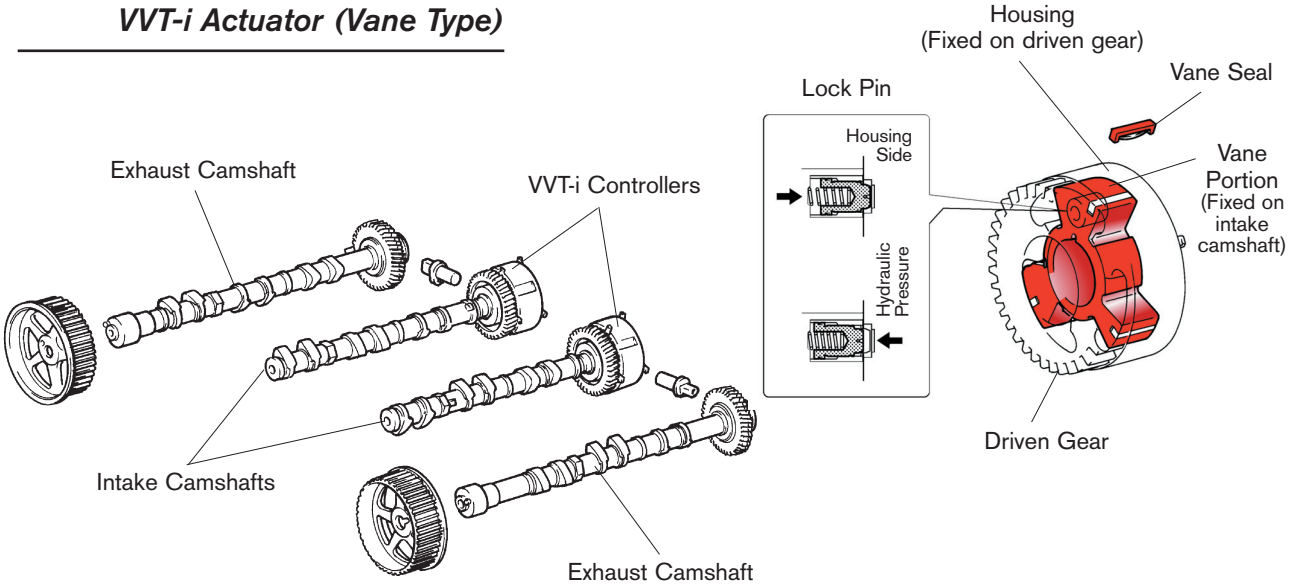

Fig. 8-09

T852f296/T852f297

VVT-i Actuator (Vane Type) Operation

This controller consists of a housing driven by the exhaust camshaft and a vane fixed to the intake camshaft. Oil pressure is directed to either side of the vane causing the camshaft to rotate in relation to the driven gear.

VVT-i Operation

	Operation	Camshaft Timing Oil Control Valve Drive Signal	Description
Advance	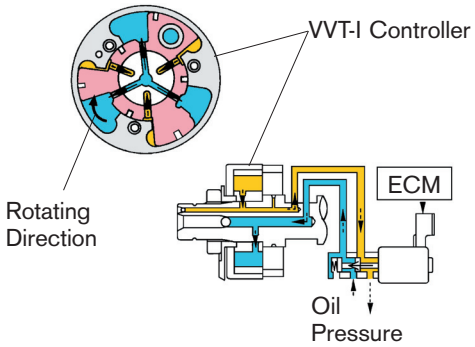	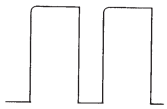	When the camshaft timing oil control valve is positioned as illustrated at left by the advance signal from the ECM, the resultant oil pressure is applied to the timing advance side vane chamber to rotate the camshaft in the timing advance direction.
Retard	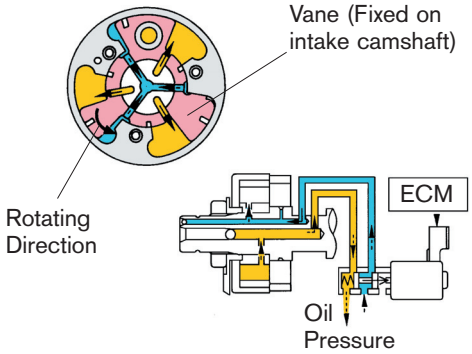	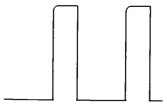	When the camshaft timing oil control valve is positioned as illustrated at left by the retard signal from the ECM, the resultant oil pressure is applied to the timing retard side vane chamber to rotate the camshaft in the timing retard direction.
Hold	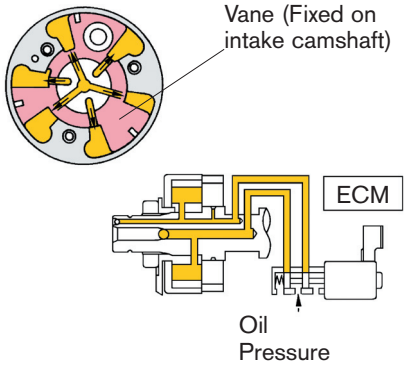	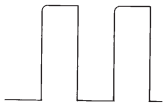	The ECM calculates the target timing angle according to the traveling state to perform control as described above. After setting at the target timing, the camshaft timing oil control valve is in the neutral position unless the traveling state changes. This adjusts the valve timing at the desired target position and prevents the engine oil from running out when it is unnecessary.

Fig. 8-10

T852f298/T852f299
T852f300/T852f301
T852f302/T852f303

Acoustic Control Induction System (ACIS)

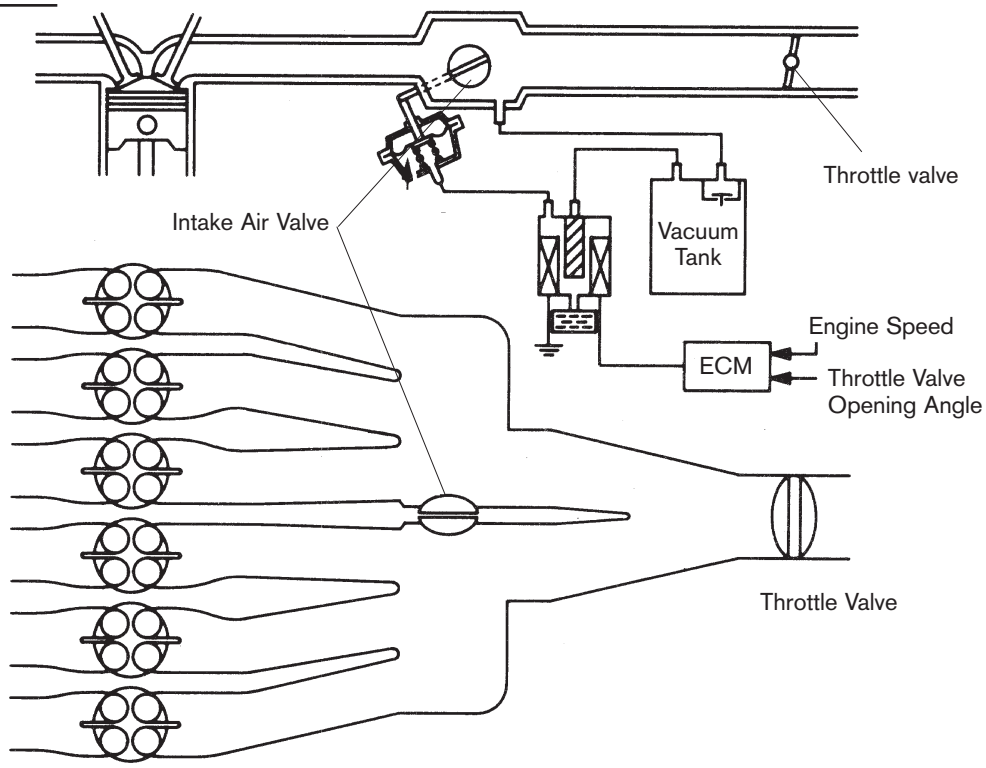

Fig. 8-11
T852f316

Acoustic Control Induction System (ACIS)

The Acoustic Control Induction System (ACIS) improves the torque in the whole RPM range, especially that in the low-speed range, by changing the intake manifold length in stages. The intake manifold length is varied in stages by optimum control of the intake air control valve(s). The air flow in the intake pipe pulsates due to opening and closing of the engine intake valves. When an intake valve is closed, the air near the valve is compressed by the inertia force. This compressed air pushes off the intake valve at high speed toward the intake chamber. If the intake manifold length and intake chamber shape are set to cause the compressed air pressure to return to an engine intake valve during the intake stroke, the intake air volume is increased improving volumetric efficiency. This is called the intake inertia effect. This improves torque and horsepower.

The ACIS changes the intake manifold length in stages according to the pulsating flow cycle that varies with the engine speed and throttle valve opening.

The ACIS is tuned for each type of engine. Vacuum stored in the vacuum chamber is applied to the intake control valve through the VSV. The VSV is switched on and off by the ECM. The intake control valve is switched according to engine speed and load.

There are two-stage and three-stage ACIS systems. The three-stage uses two VSVs.

1MZ-FE 2-Stage ACIS

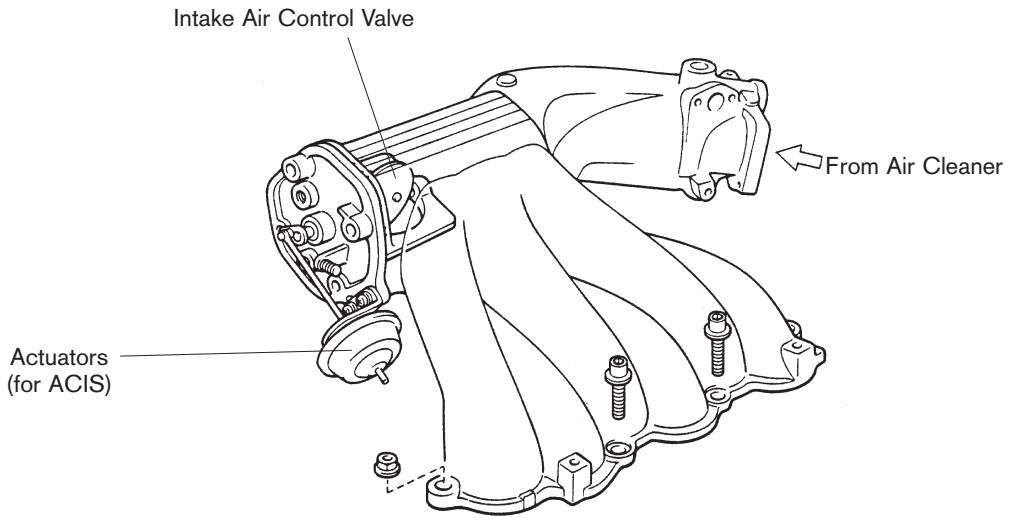

Fig. 8-12
T852f317

2JZ-FE ACIS

① VSV turned ON

Closing air control valve has the same effect as lengthening the intake manifold.

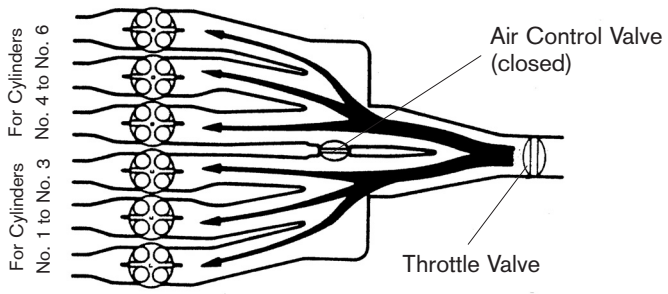

② VSV turned OFF

Opening air control valve has the same effect as shortening the intake manifold.

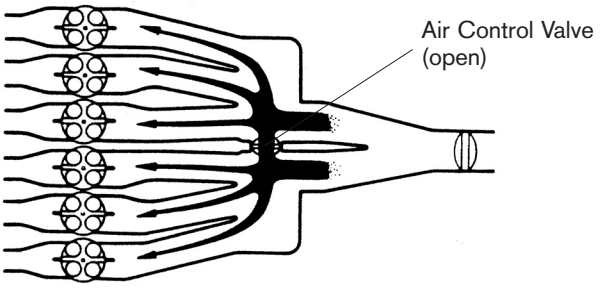

Fig. 8-13

T852f318/T852f319

2-Stage ACIS VSV Chart

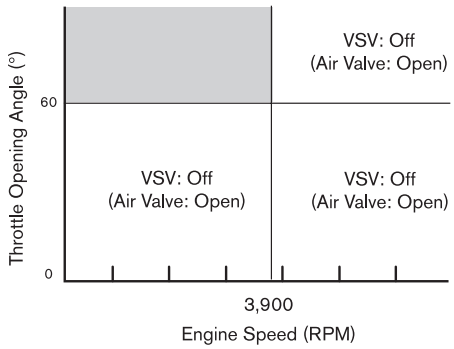

1MZ-FE 2 Stage ACIS VSV chart.

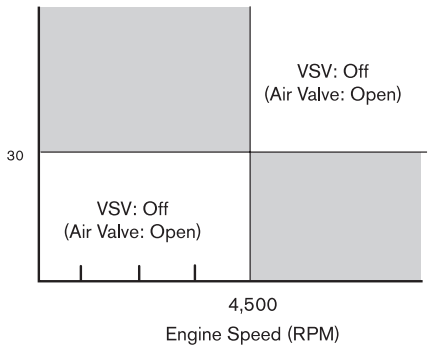

2JZ-FE 2 Stage ACIS VSV chart.

Fig. 8-14

T852f320

1MZ-FE 3-Stage ACIS

3-Stage ACIS System for greater control

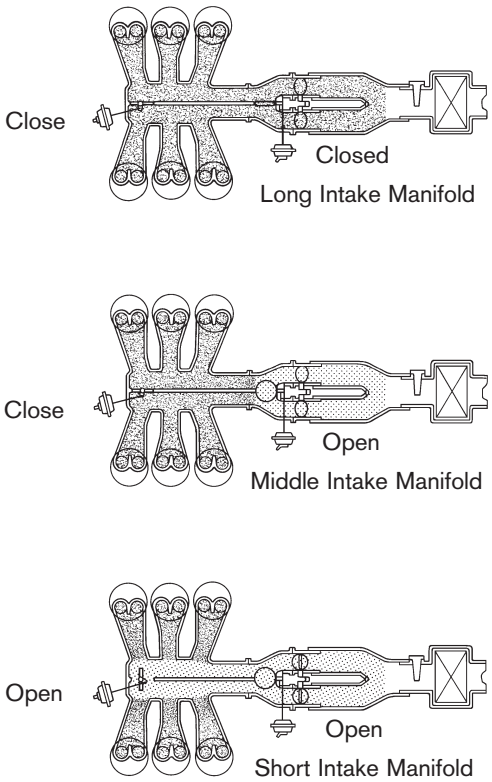

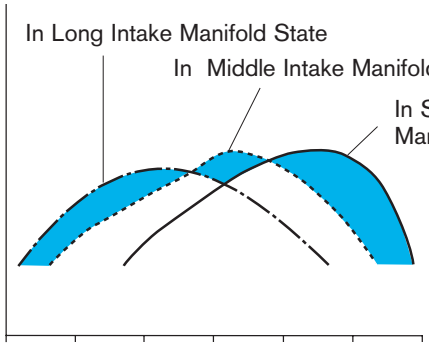

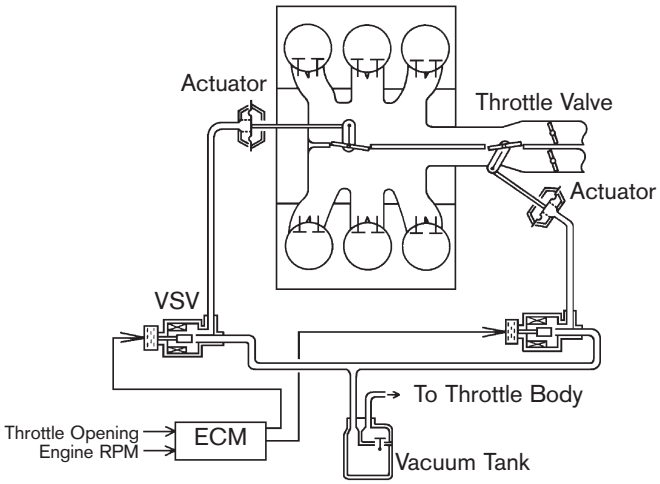

Intake Manifold Length

Intake Chamber

Fig. 8-15

T852f321/T852f324
T852f322/T852f325
T852f323/T852f326

1UZ-FE & 3UZ-FE 2-Stage ACIS

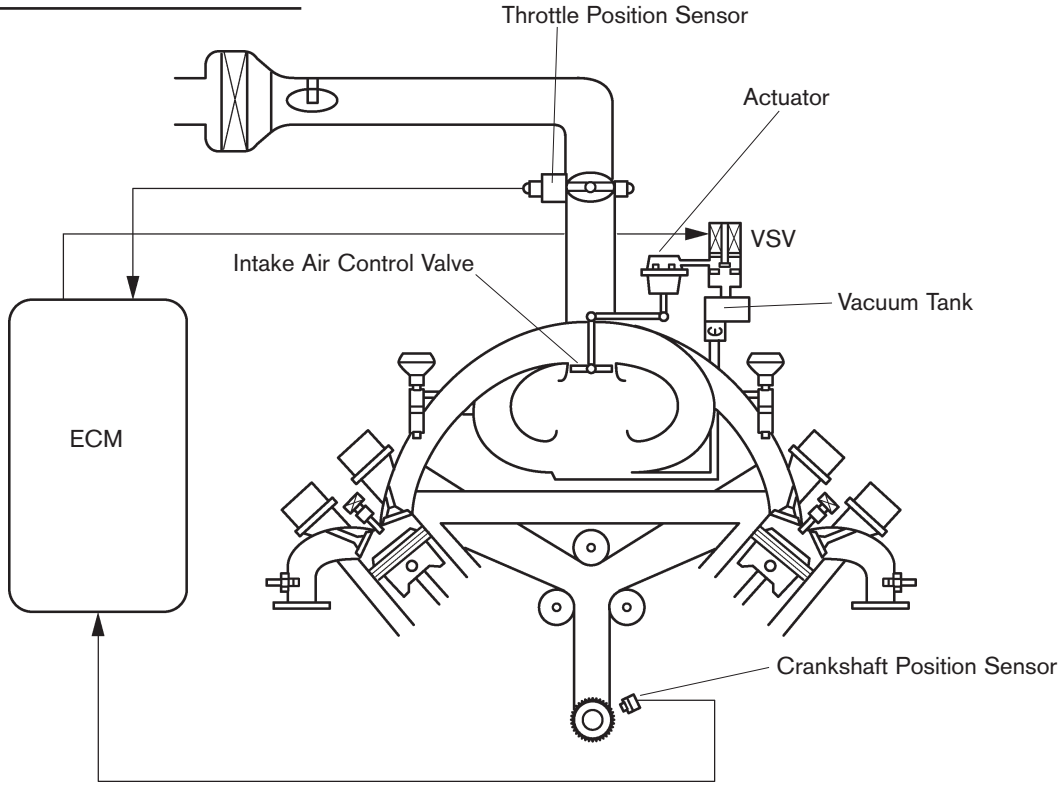

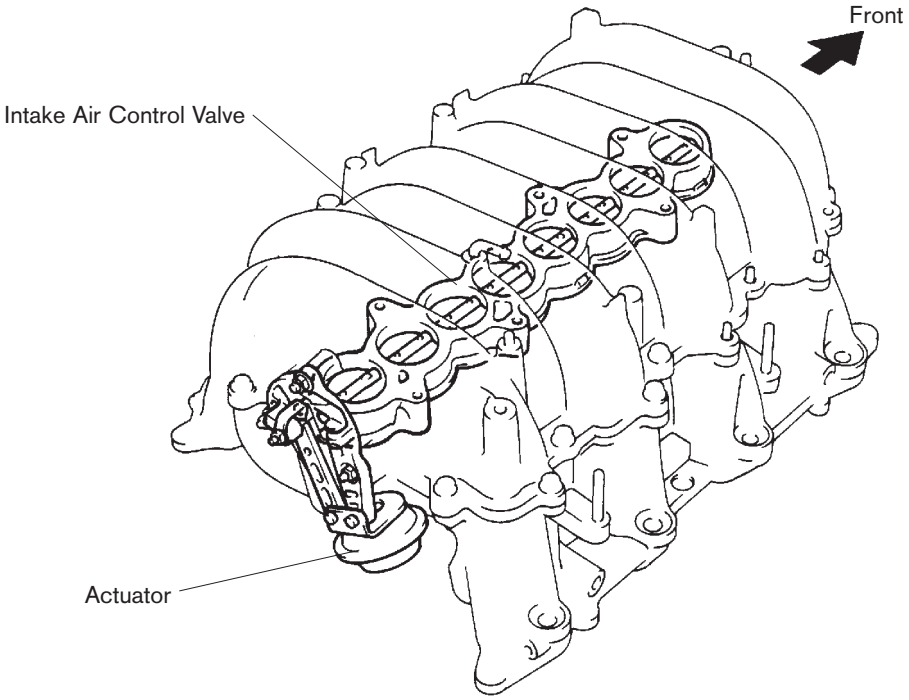

Fig. 8-16

L852f819/L852f820

Valve Closed

With the valve closed, the effective length is increased. Note that the 1UZ-FE turns the VSV OFF above 60˚ throttle opening at low and high speeds.

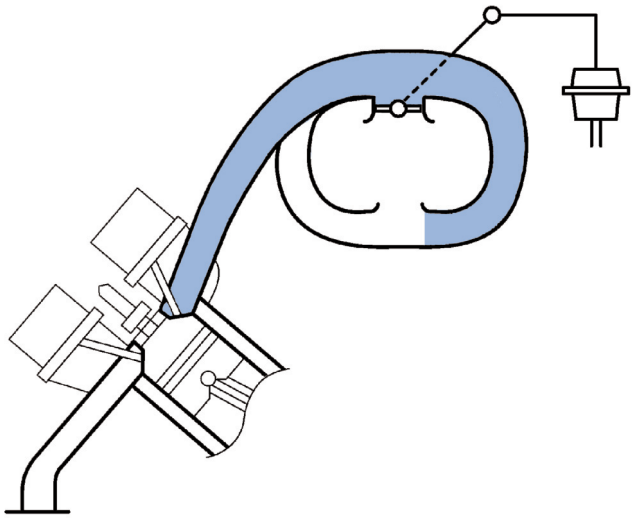

Effective Intake Manifold Length

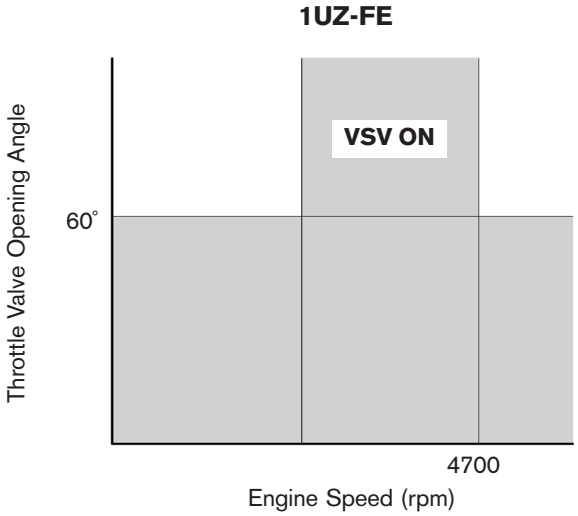

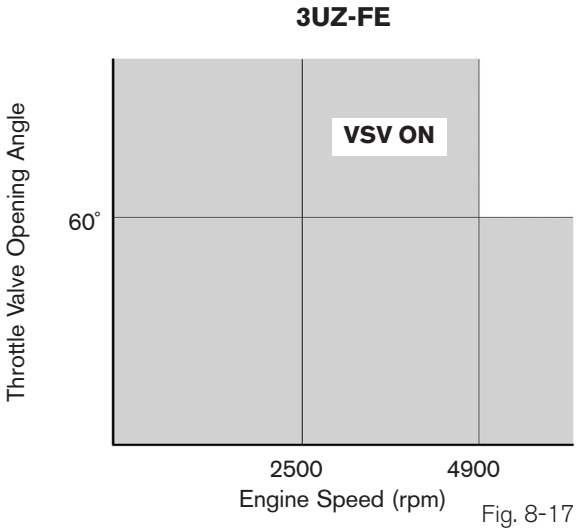

Fig. 8-17

L852f821/L852f825
L852f823

Valve Open

With the valve open, the effective length is decreased. Note that the 3UZ-FE turns the VSV OFF only at high speeds above 60˚ throttle angle.

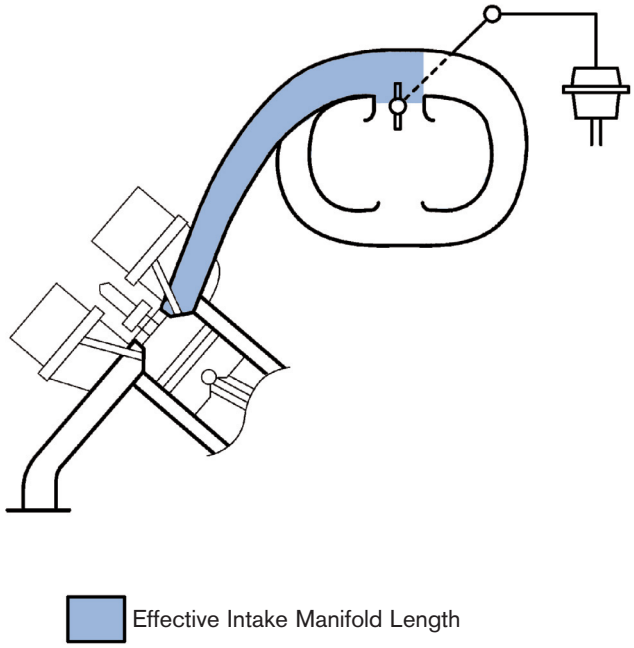

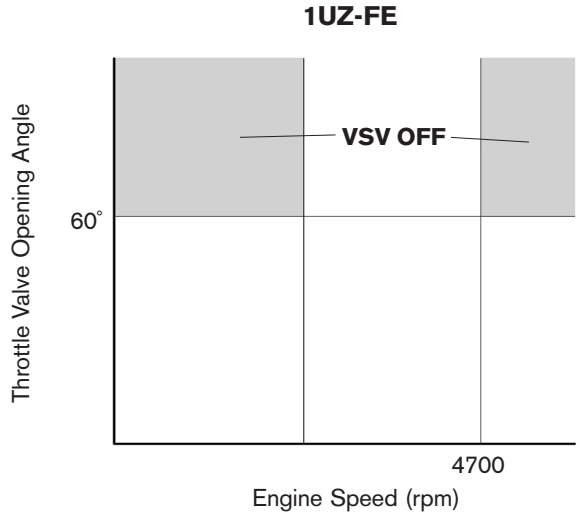

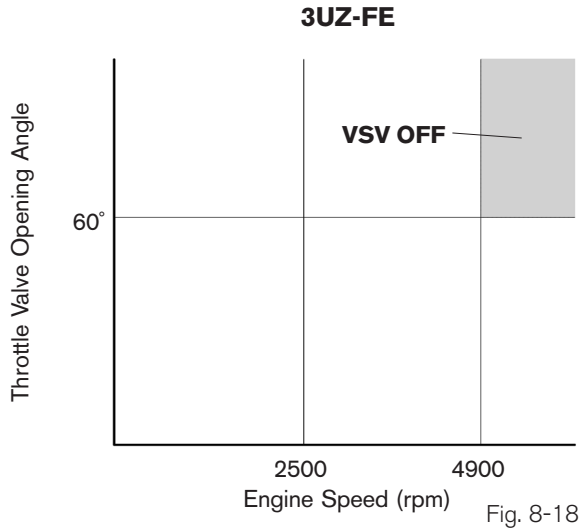

Fig. 8-18

L852f822/L852f826
L852f824

ACIS VSV

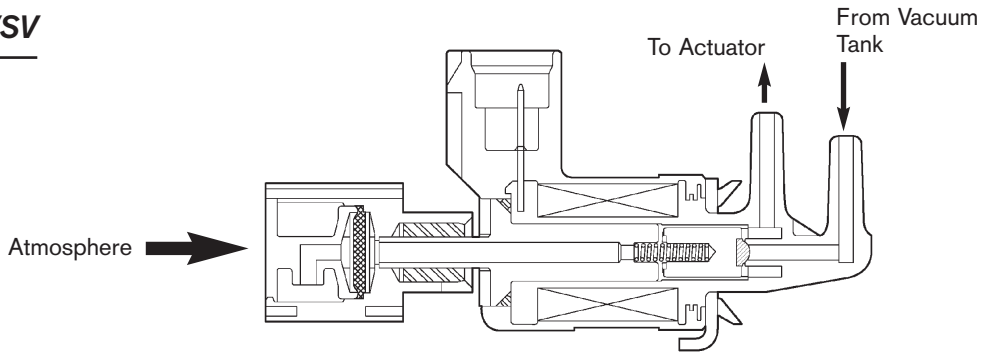

Fig. 8-19

L852f827

Notes

Circuit Inspection

Input Signals

Sensors produce different types of signals, that are either analog (variable voltage) or digital signal (on or off). The ECM will measure either voltage, amperage, or frequency of these signals.

Analog and Digital Signals

Fig. A-01

T852f363

Analog Signal

An analog signal is a variable signal and is usually measured by voltage or frequency. The voltage of the signal can be at any given point in a given range.

Digital Signal

A digital signal has only two states; high or low. This signal is often measured in volts or frequency. Digital signals are useful for indicating on/off, yes/no, high/low, or frequency. A digital signal is a signal that stays high or low for an extended period of time, sometimes called a discrete signal. Typically in circuits that involve switches, such as the Stop Lamp signal and Park/Neutral switch signal, the ECM is looking for a change in mode. Some sensors, such as the MRE speed sensor produce a digital signal and the ECM is measuring the frequency.

Amplitude

Amplitude is a measurement of strength, such as voltage. Amplitude can be measured from peak to peak, or from a reference point.

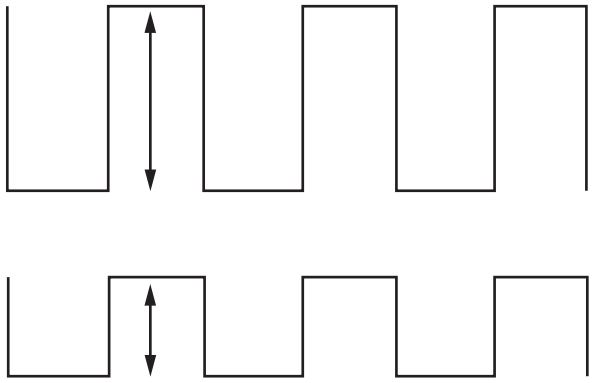

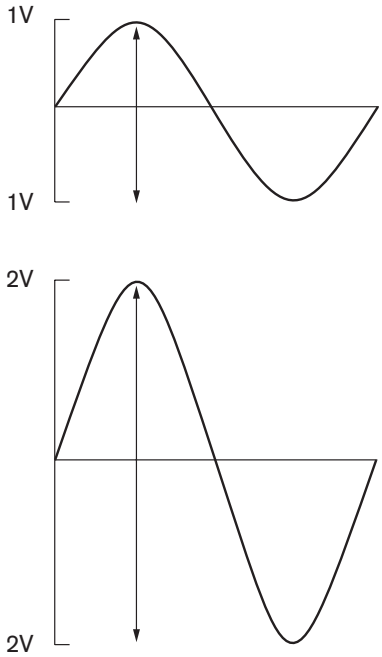

Fig. A-02

T852f364/T852f380

Frequency

Some signals are measured by frequency. A frequency is defined as the number of cycles per second. A cycle is a process that repeats from a common starting point. The unit for measuring frequency is called Hertz (Hz).

Frequency should not be confused with period. A period is the time it takes for the signal to repeat and is expressed as time. A 1 Hz signal lasts 1 second. A 2 Hz signal has a period of 0.5 seconds.

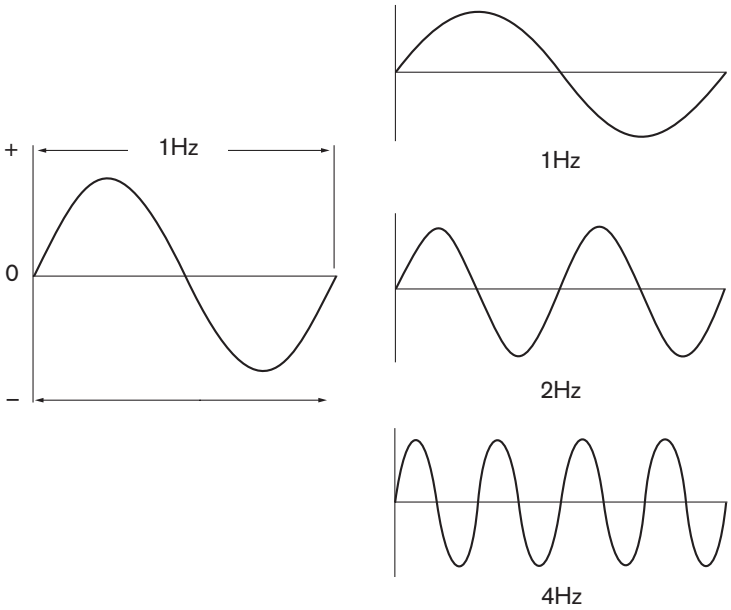

Fig. A-03

T852f365/T852f381

DC Voltage

Direct current is where the current flows in one direction. Though current flow and voltage can be variable, the direction always remains the same. The DVOM must be in the DC scale to measure DC voltage.

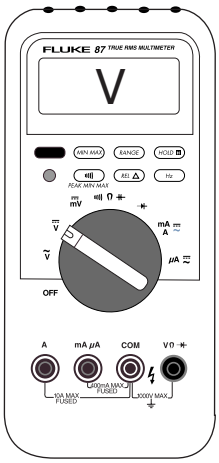

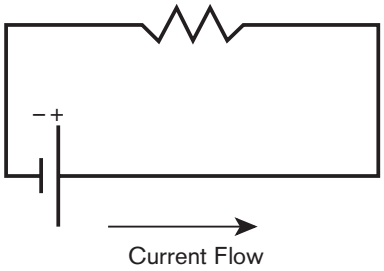

Fig. A-04

T852f380/T852f387

AC Voltage

Alternating current is where the direction of current flow changes. Current will travel from positive to negative, and then reverse course going to negative then positive. The DVOM must be in AC scale to measure AC voltage. There are different methods for measuring AC voltage and some DVOMs use what is known as a True RMS (Root Mean Square) to measure voltage. It is important for you to realize that the meter specified by the manufacturer must be used to obtain accurate results when compared to manufacturer's specifications.

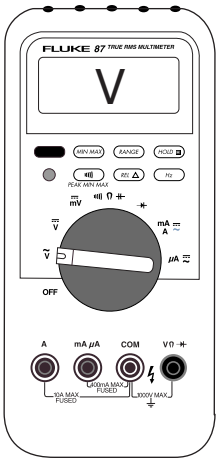

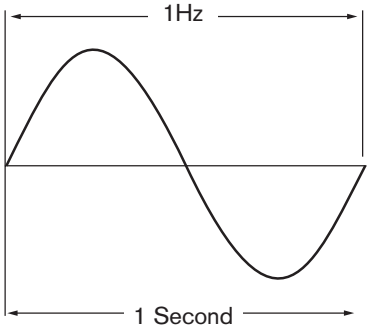

Fig. A-05

T852f388/T852f365

Output Signals and Circuits

To correctly interpret an oscilloscope pattern and DVOM reading, the technician needs to know the type of output circuit and how the test device is connected to the circuit.

Power Side Switched Circuit

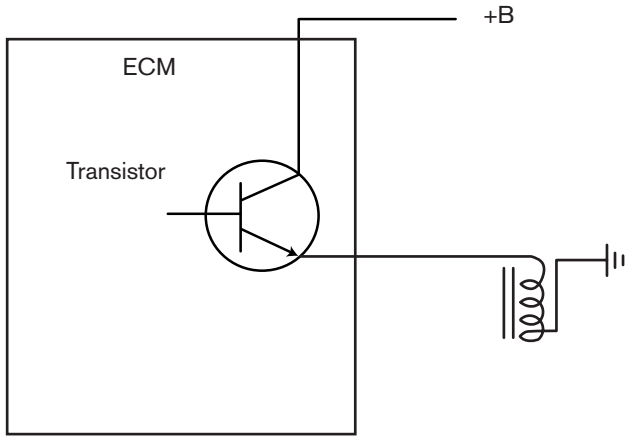

Fig. A-06

T852f366

Power Side Switched Circuit

A power side switch circuit will have voltage applied to the device when the circuit is switched on. When the transistor (think of the transistor as a switch) is turned on, current and voltage are applied to the device turning it on. The transistor is between power and the device. This is why they are commonly called power or power side switched circuits.

Ground Side Switched Circuit

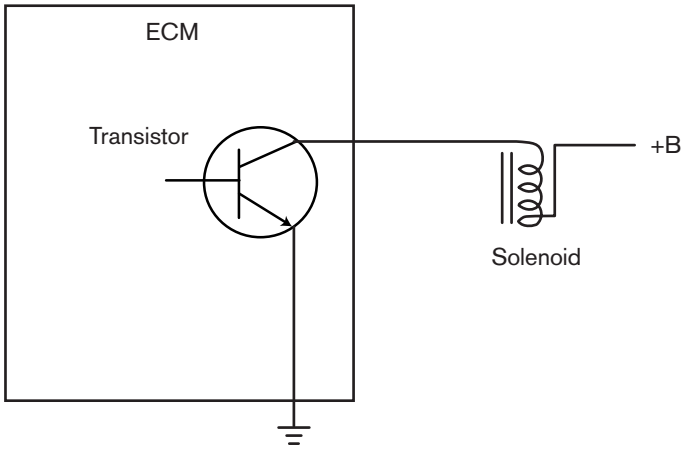

Fig. A-07

T852f367

Ground Side Switched Circuit

A ground side switched circuit has the transistor (switch) placed between the device and ground. When the transistor is turned on, the circuit now has a ground and current flows in the circuit. When the transistor is turned off current flow stops. Note that there is voltage present up to the transistor whenever the transistor is off.

Square Wave Duty Ratio Signals

When A and B are equal in length, the pulsewidth is 50%. This is a true square wave signal. A voltmeter connected to this circuit will measure half the supply voltage. The signal is said to have a low duty ratio when the on time is less than 50%.

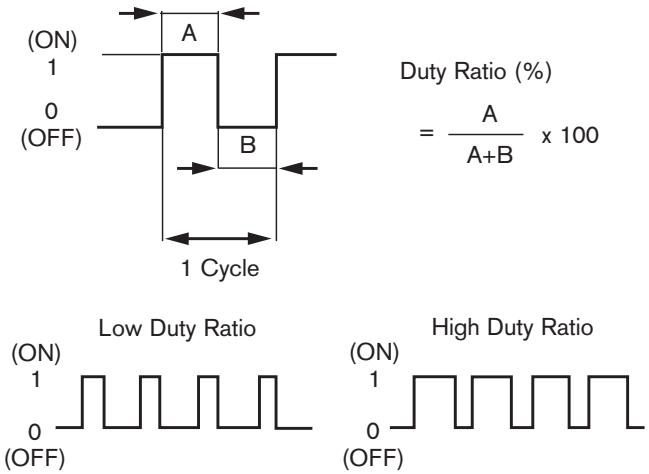

Fig. A-08

T852f368

Output Control Signals

Many devices, such as fuel injectors, EVAP purge, EGR VSV, rotary solenoid, alternator field circuit, etc. need to be modulated so that the desired output is achieved. There are a variety of control signals that can be used to regulate devices. Typically, the control signal changes the on/off time. This type of signal is often referred to as a pulse width modulated (PWM) signal and the on time is referred to as the pulsewidth. The duty cycle is the time to complete the on/off sequence. This can be expressed as a unit of time or as a frequency. The duty ratio is the comparison of the time the circuit is on versus the time the circuit is off in one cycle. This ratio is often expressed as a percentage or in milliseconds (ms).

PWM Signal

Each signal has the same frequency, only the pulsewidth has changed. The low duty ratio will have a lower current output.

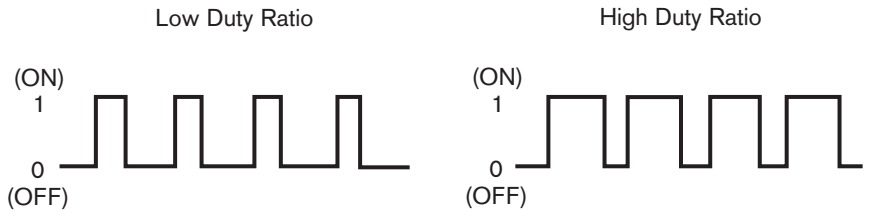

Fig. A-09

T852f368

Duty Ratio Solenoid

As the duty ratio (On time) increases, current flow through the solenoid increases moving the control valve. Oil pressure is then applied to the component that needs to be regulated, such as the variable valve timing mechanism, or lock-up control. In this example, oil pressure increases as current increases. Other duty ratio solenoids can work in the opposite manner. Increasing current will decrease oil flow.

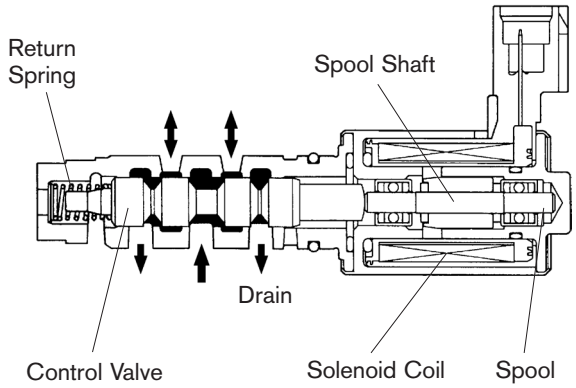

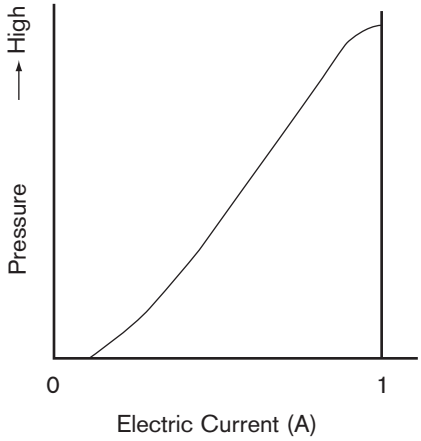

Fig. A-10

T852f370/T852f371

Fixed Duty Cycle Variable Duty Ratio (Pulse Width Modulated) Signal

This type of output control signal is defined by having a fixed duty cycle (frequency) with a variable duty ratio. With this type of signal only the ratio of on to off time varies. The ratio of on to off time modulates the output.

Variable Duty Cycle Variable Duty Ratio Signal

Duty cycle frequency has changed.
Duty ratio has changed.

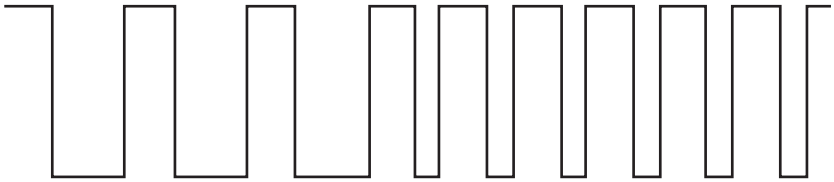

Fig. A-11

T852f372

Variable Duty Cycle/Variable Duty Ratio Signal

This signal varies the frequency of the duty cycle and the duty ratio. An excellent example is the signal used to control the fuel injector. As engine RPMs increase the fuel injector activation increases. As engine load increases, the duration of the fuel injector increases. It is easy to observe this type of control signal on the oscilloscope. With the oscilloscope connected to the fuel injector ECM terminal, as the engine RPMs (frequency) increase there will be more fuel injector cycles on the screen. As engine load increases, the on time (pulsewidth) also increases.

Measuring and Interpreting Signals

Oscilloscopes and many DVOMs can measure the pulsewidth, duty ratio, and frequency. For the technician to correctly interpret the reading oscilloscope line trace, the technician needs to know how the DVOM/oscilloscope is connected and the type of circuit.

Measuring Available Voltage On a Ground Side Switched Circuit

When the circuit is on, the DVOM will measure nearly 0 volts at the ECM.

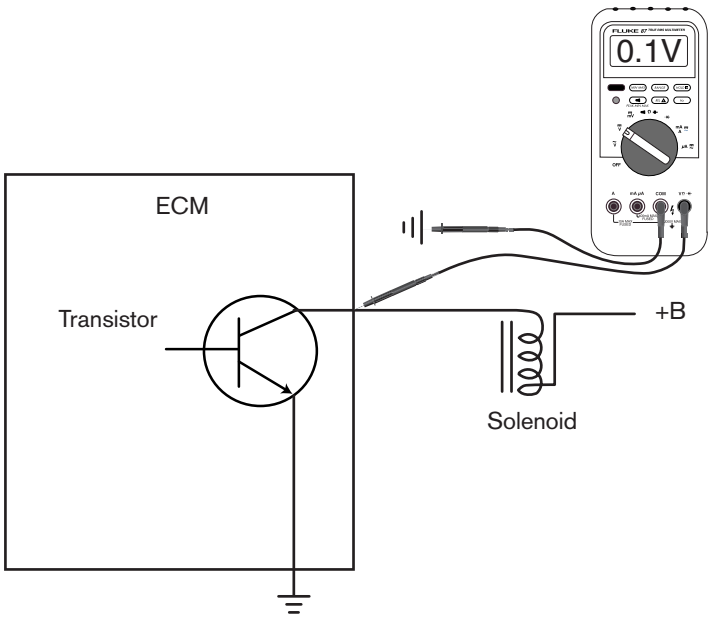

Fig. A-12
T852f382

Ground Side Switch Voltage Pattern Interpretation

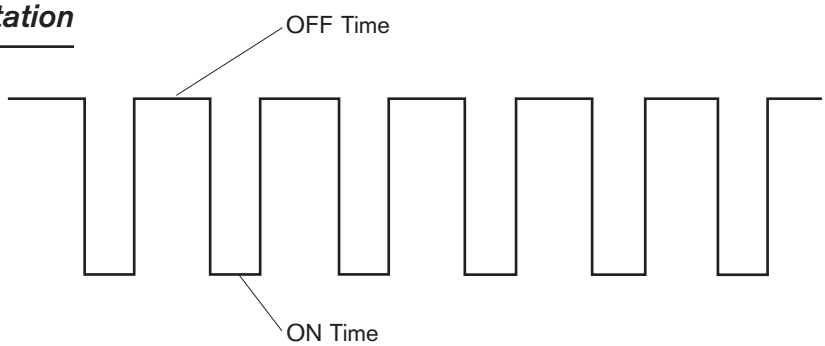

Fig. A-13
T852f373

Ground Side Switch Circuit Interpretation

With an oscilloscope connected at the ECM on a ground side switched circuit, the on time will be represented by the low (nearly 0 volts) voltage line trace. The voltage trace should be at supply voltage when the circuit is off and nearly 0 volts when the circuit is on. The on time (pulsewidth) is amount of time at 0 volts. If trace line does not go to nearly 0 volts, there may be a problem with the ground side of the circuit.

A DVOM in many cases can be substituted for the oscilloscope. When using a DVOM with a positive (+) or negative (-) trigger, select negative (-) trigger. Then the DVOM reading will represent the on time, usually as a percentage or in ms. On the voltage scale, the DVOM will read +B when the circuit is off and nearly 0 volts when the circuit is on.

Measuring Across the Load

Connecting at the ECM is the most common point used in the Repair Manual procedures. However, it is also possible to connect the oscilloscope or DVOM across the device. If this is done, the interpretation is different. The DVOM will read 0 volts when the circuit is off, and nearly +B when the circuit is on.

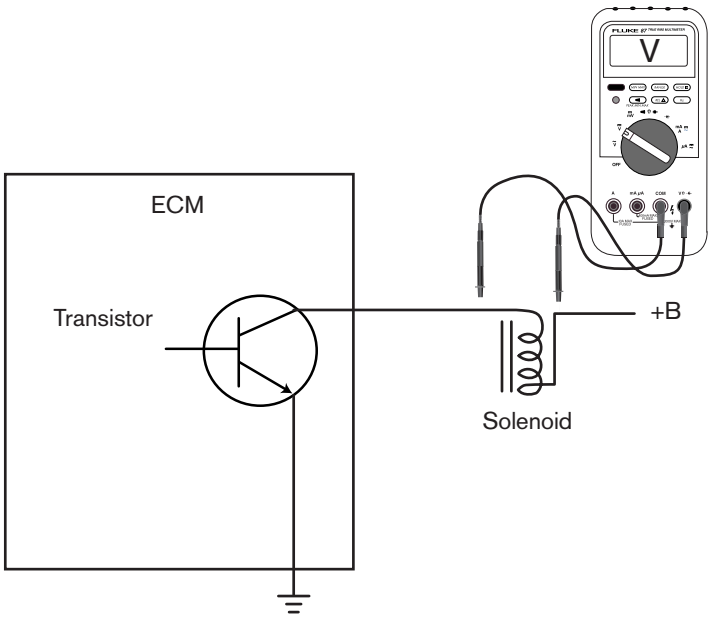

Fig. A-14
T852f383

Measuring Across the Load Pattern Interpretation

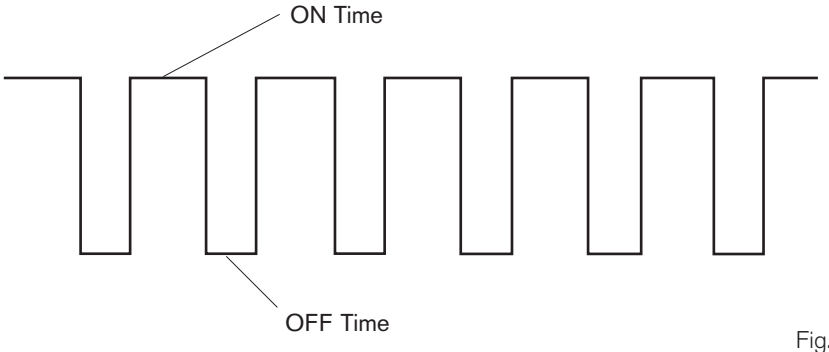

Fig. A-15
T852f373

Measuring Available Voltage on a Power Side Switched Circuit

When the circuit is on, the DVOM will measure +B at the ECM.

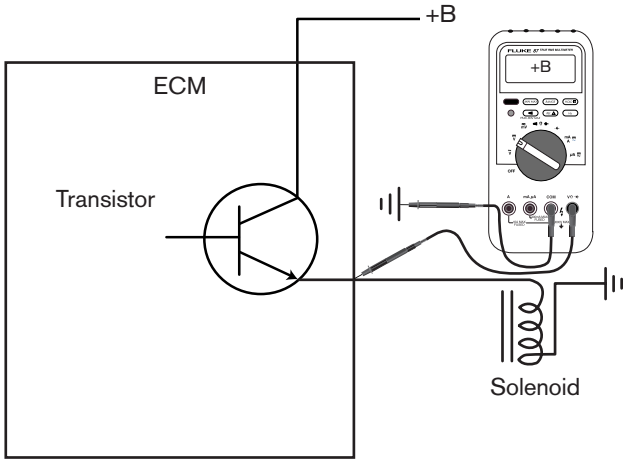

Fig. A-16

T852f384

Pattern Interpretation for a Power Side Switched Circuit

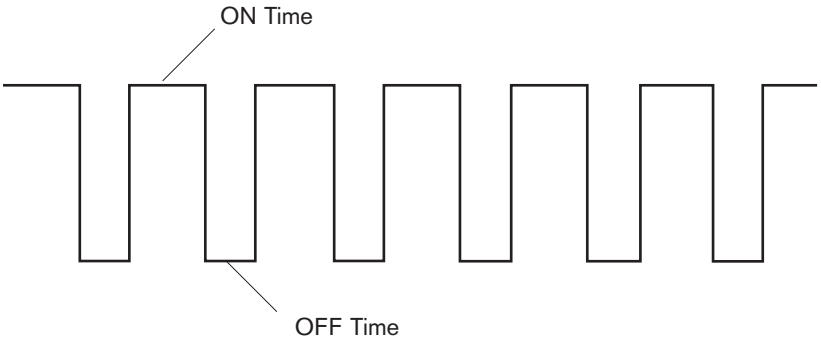

Fig. A-17

T852f373

Power Side Switch Circuit Interpretation

With an oscilloscope/DVOM connected at the ECM on a hot side switched circuit, the on time will be represented by the high (supply voltage) voltage line trace. The voltage trace should be at supply voltage when the circuit is on and at 0 volts when the circuit is off. The on time (pulsewidth) is the amount of time at supply voltage. If trace line does not go to supply voltage, there may be a problem with the supply side of the circuit.

When using a DVOM select positive (+) trigger. Then the DVOM reading will represent the on time, usually as a percentage or in ms.

Checking Circuit Operation Across The Load

The DVOM will measure nearly +B volts when the circuit is on.

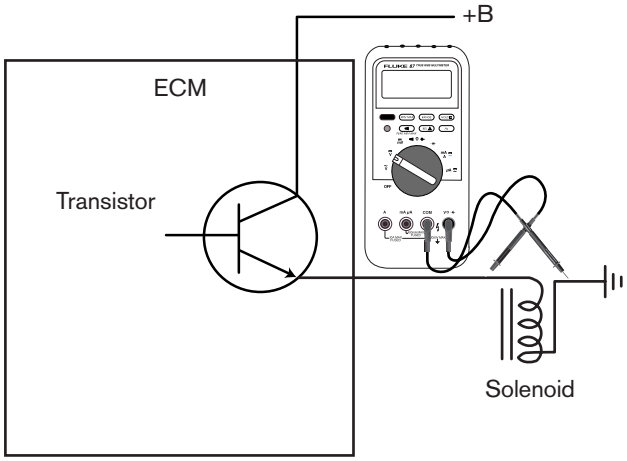

Fig. A-18
T852f369

Normally Closed Solenoid

Most solenoids are normally closed. This means that when they are off, they prevent the passage of fluid, air, vacuum, etc. When turned on, the passage opens.

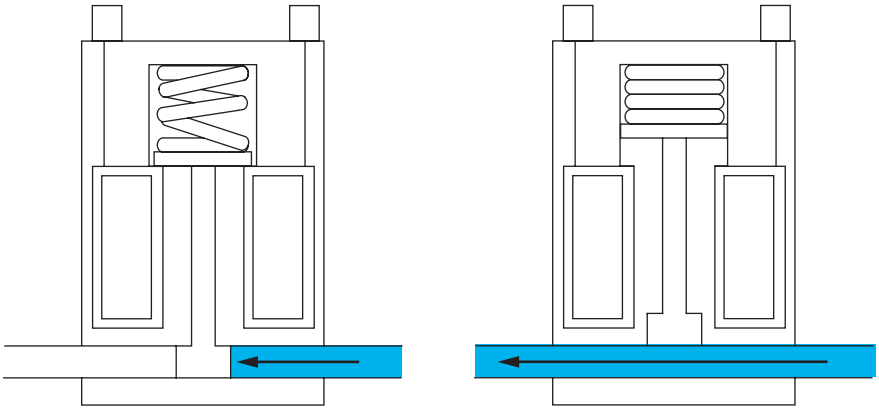

Fig. A-19
T852f374/T852f375

Normally Open Solenoid

When off, the passage in the solenoid is open.

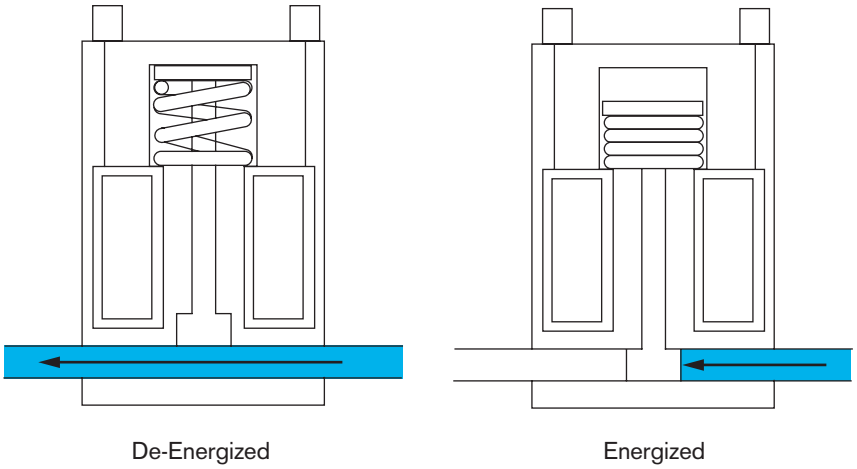

Fig. A-20

T852f376/T852f377

Solenoids

A solenoid is a component that is used to move something or control fluid flow. A solenoid consists of spring loaded valve, a coil, and housing. When the coil is energized, the magnetic field will pull the valve towards the center of the magnetic field. When the coil is turned off, the spring will return the valve to its resting position. There are a variety of solenoids used for engine control systems. It is important for the technician to know what type of solenoid is being used to determine operation and diagnosis. The following is explanation of the different types.

Two-Way VSV

Normally closed, Two-Way VSV.

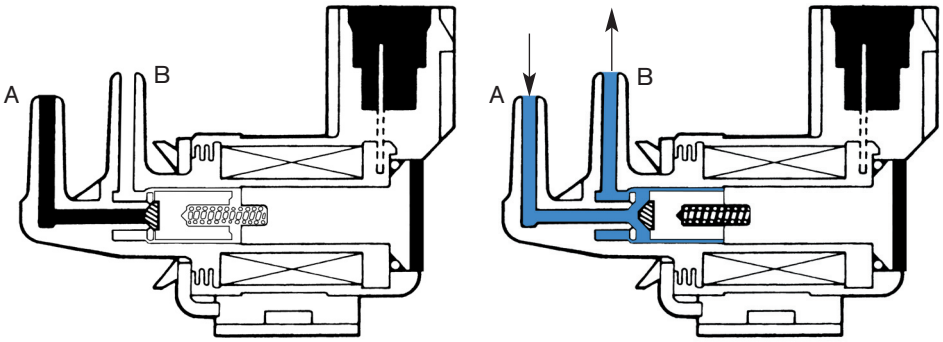

Fig. A-21

T852f378/T852f379

Vacuum Switching Valves (VSV)

VSVs are used in variety of applications. It is useful to know what type of VSV is being used for operational and diagnostic knowledge.

Two-way VSVs are commonly used in a variety of systems and can be the normally open or normally closed type.

Two-way VSV	OFF	ON
Normally Closed	Closed	Open
Normally Open	Open	Closed

Two–Way VSV Operation Checks

For a normally closed VSV, air pressure is applied to a passage. Air flow should be greatly restricted. Next, the VSV is energized. Air should pass through freely. A restricted passage indicates the VSV has become plugged from debris or has failed.

For a normally open VSV air pressure is applied to a passage. Air should pass through freely. A restricted passage indicates the VSV has become plugged from debris or has failed. Next, the VSV is energized and air pressure is applied to the passage. Air flow should be greatly restricted.

For both VSVs, the coil resistance is checked with an ohmmeter.

Three-Way VSV

When ON, the passage between A and B is open

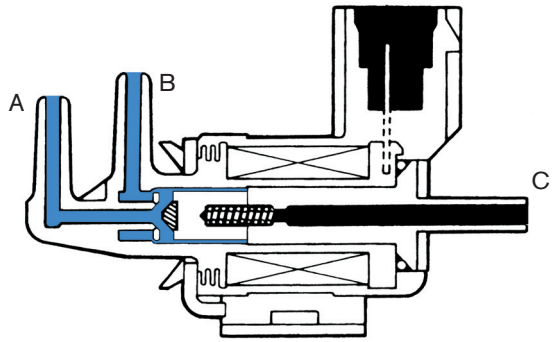

When OFF, the passage is open between B and C

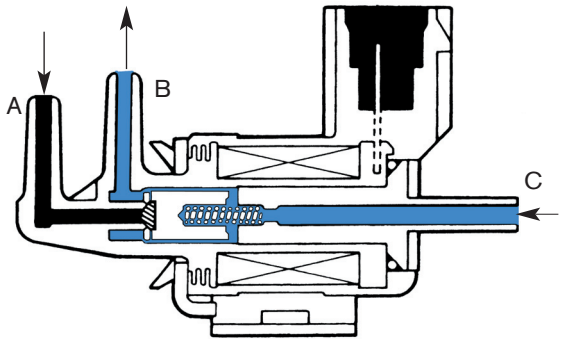

Fig. A-23

T852f089/T852f090

Three–Way VSV

A three-way VSV has three passages. When off, two passages are open and one is closed. When on, one passage will be closed and the other two opened.

Engine Control System Acronyms

Acronym	*Description*
AB1,2,3,4	Supercharger Bypass Valve
ABV	Supercharger Bypass Valve VSV
ADJ2	Ground
A/C SW	A/C Switch Signal
A/C (1)	A/C Amplifier
ACIS	Accoustic Control Intake System
ACIS	ACIS VSV
ACMG	A/C Magnetic Clutch Relay
ACT	Air Conditioning
ACV	A/C Idle Up Valve
AF +/-	Air/Fuel Ratio Sensor
AFL +/-	Air/Fuel Ratio Sensor
AFR +/-	Air/Fuel Ratio Sensor
AMC	A/C Amplifier
(+B)	Battery Power from EFI Relay
BATT	Battery Power
B/M	FR-HTR (Hi) Relay
CF	A/C Pressure Switch Relay
CG	Chassis Ground
CL +/-	Magnetic Clutch
CODE	Transponder Key Amplifier
DI	Fuel Pump Control
E1...	Ground (Earth)
EFI +/-	Traction Control ECU
EFI +/-	Throttle ECU
EFIF	
EGLS	EGR Valve Position
EGR	EGR VSV
EO1...	Ground (Earth)
EOM	Ground (Earth)
ELS	Electric Load Sensor Circuit
ELS2	Integration Relay
ELS2	Heated Mirror
ETC	Throttle ECU
EVAP	EVAP VSV
FC	Fuel Pump Relay
FPU	Fuel Pressure Up VSV

* Indicates more than one number possible.

Acronym	*Description*
G	Distributor
G+	Camshaft Position
G22+	Camshaft Position
HT1...	Oxygen Sensor Heater Control
HTAF1...	Air/Fuel Ratio Heater
IDL	Throttle Position Switch
IGF	IGF Signal
IGSW	Ignition Switch
IGT	Igniter/Ignition Coil(s)
IMLD	Theft Deterent ECU
IMLD	To Security Indicator Light
ISCC	IAC Stepper Motor
ISCO	IAC Stepper Motor
KNK(L/R)	Knock Sensor
KS	Mass Air Flow Meter Karmen Vortex Type
LOCK IN	A/C Magnetic Clutch Lock
M+ M-	Throttle Control Motor
MREL	Main Relay
NCO +/-	O/D Direct Clutch Speed
NE+	Crankshaft Position
NE-	Camshaft/Crankshaft Circuit
NEO	ABS & Traction ECU
NSW	Starter Circuit
OD	Overdrive Switch
OIL	A/T Fluid Temp. Sensor
OMR	Engine Oil Feeder Control Motor
OMT	Engine Oil Feeder Control Mtr Relay
OX*	Oxygen Sensor
PIM	Manifold Absolute Pressure
PM1	Turbo Pressure
PMC	Waste Gate Valve VSV
PRG	EVAP VSV
PS SW	Power Steering Switch
PTNK	Vapor Pressure Sensor Signal

Acronym	*Description*
R	Back Up Light Switch
RSC	IAC (Rotary Solenoid)
RSO	IAC (Rotary Solenoid)
RXCK	Transponder Key Amplifier
SDL	Signal Data Line
SG	Signal Ground
SDG	Signal Data Ground
SMC	Supercharger Magnetic Clutch
SPD	Vehicle Speed
STA	Start Signal
STP	Stop Light Switch
TC	Data Link Connector 1
THA	Intake Air Temperature Sensor
TE1...	Data Link Connector 1
THG	EGR Temperature
THW	Engine Coolant Temperature
THWO	A/C Amplifier

Acronym	*Description*
TPC	Vapor Pressure Sensor VSV
TRC +/-	Traction Control ECU
TXCT	Transponder Key Amplifier
VC	Voltage Control
VG	Mass air Flow Meter Hot Wire Type
VPA*	Accelerator Pedal Position
VS	Mass Air Flow Meter (Vane Type)
VSV1	Intake Air Control VSV
VSV2	Exhaust Gas Control Valve
VSV3	Exhaust Bypass VSV
VTO1	Throttle ECU
VTO2	Throttle ECU
VTA*	Throttle Position
W	Malfunction Indicator
#10 - #80	Fuel Injectors

* Indicates more than one number possible.

Description	*Acronym*
A/C Switch Signal	A/C SW
A/C Amplifier	A/C (1)
A/C Amplifier	AMC
A/C Amplifier	THWO
A/C Idle Up Valve	ACV
A/C Magnetic Clutch Lock	LOCK IN
A/C Magnetic Clutch Relay	ACMG
A/C Pressure Switch Relay	CF
A/T Fluid Temp. Sensor	OIL
ABS & Traction ECU	NEO
Accelerator Pedal Position	VPA*
Acoustic Control Intake System	ACIS
ACIS VSV	ACIS
Air Conditioning	ACT
Air/Fuel Ratio Heater	HTAF1...
Air/Fuel Ratio Sensor	AF +/-
Air/Fuel Ratio Sensor	AFL +/-
Air/Fuel Ratio Sensor	AFR +/-
Back Up Light Switch	R
Battery Power	BATT
Battery Power from EFI Relay	(+B)
Camshaft Position	G+
Camshaft Position	G22+
Camshaft/Crankshaft Circuit	NE-
Crankshaft Position	NE+
Data Link Connector	CG
Data Link Connector 1	TC
Data Link Connector 1	TE1...
Distributor	G
EGR Temperature	THG
EGR Valve Position	EGLS
EGR VSV	EGR
Electric Load Sensor Circuit	ELS
Engine Coolant Temperature	THW
Engine Oil Feeder Control Motor	OMR
Engine Oil Feeder Control Mtr Relay	OMT
EVAP VSV	EVAP
EVAP VSV	PRG
Exhaust Bypass VSV	VSV3

* Indicates more than one number possible.

Description	*Acronym*
Exhaust Gas Control Valve	VSV2
FR-HTR (Hi) Relay	B/M
Fuel Injectors	#10 - #80
Fuel Pressure Up VSV	FPU
Fuel Pump Control	DI
Fuel Pump Relay	FC
Ground	ADJ2
Ground (Earth)	E1...
Ground (Earth)	EO1...
Ground (Earth)	EOM
Heated Mirror	ELS2
IAC Stepper Motor	ISCC
IAC Stepper Motor	ISCO
IAC (Rotary Solenoid)	RSC
IAC (Rotary Solenoid)	RSO
IGF Signal	IGF
Igniter/Ignition Coil(s)	IGT
Ignition Switch	IGSW
Intake Air Control VSV	VSV1
Intake Air Temperature Sensor	THA
Integration Relay	ELS2
Knock Sensor	KNK(L/R)
Magnetic Clutch	CL +/-
Main Relay	MREL
Malfunction Indicator	W
Manifold Absolute Pressure	PIM
Mass Air Flow Meter Hot Wire Type	VG
Mass Air Flow Meter Karmen Vortex Type	KS
Mass Air Flow Meter (Vane Type)	VS
O/D Direct Clutch Speed	NCO +/-
Overdrive Switch	OD
Oxygen Sensor	OX*
Oxygen Sensor Heater Control	HT1...
Power Steering Switch	PS SW

Description	*Acronym*
Security Indicator Light	IMLD
Signal Data Ground	SDG
Signal Data Line	SDL
Start Signal	STA
Starter Circuit	NSW
Stop Light Switch	STP
Supercharger Bypass Valve	AB1,2,3,4
Supercharger Bypass Valve VSV	ABV
Supercharger Magnetic Clutch	SMC
Theft Deterrent ECU	IMLD
Throttle Control Motor	M+ M-
Throttle ECU	EFI +/-
Throttle ECU	ETC
Throttle ECU	VTO1
Throttle ECU	VTO2

Description	*Acronym*
Throttle Position	VTA*
Throttle Position Switch	IDL
Traction Control ECU	EFI +/-
Traction Control ECU	TRC +/-
Transponder Key Amplifier	CODE
Transponder Key Amplifier	RXCK
Transponder Key Amplifier	TXCT
Turbo Pressure	PM1
Vapor Pressure Sensor Signal	PTNK
Vapor Pressure Sensor VSV	TPC
Vehicle Speed	SPD
Voltage Control	VC
Waste Gate Valve VSV	PMC

* Indicates more than one number possible.

Section 1

Introduction to Engine Control System Processes and Diagnostic Tools

Overview

The purpose of this section is to:

- help you understand the general diagnostic process that you will follow regardless of the type of customer concern you are troubleshooting.
- features of diagnostic tools that will help you with greater accuracy and speed.
- lay out the troubleshooting steps and resources you will need to follow when diagnosing customer concerns.

Diagnostic Tools and Resources

There are many troubleshooting "tools" that can be used to accurately identify and troubleshoot driveability problems. These include:

- Previous Troubleshooting Experience
- Use of the OBD self-diagnostic system
- Service Literature – Technical Information System (TIS), Repair Manuals, Electrical Wiring Diagrams, and Technical Service Bulletins
- Diagnostic Toolset
- TechView

There are also other resources at your disposal for those extraordinary situations where your best attempts fail to resolve the customer concerns:

- Technical Assistance hotline
- Area office assistance; STSs, FTSs, and FPEs

With these resources available to you, even the most difficult customer concerns can be resolved while maintaining high standards for customer satisfaction.

Previous Troubleshooting Experience

Your experience is one of the best resources you have. Depending on the symptom or customer description of the driveability concern, you can often eliminate many sub-systems from your diagnostic investigations. It is important to note, however, this does not mean that troubleshooting is performed in a random manner. In fact, you will always fix the car faster and with more accuracy when you follow a systematic diagnostic approach.

Use of the On-Board (Self) Diagnostic System

All ECMs are equipped with an on-board self-diagnostic system (OBD). This system is capable of detecting shorts and opens in most sensor electrical circuits and in some actuator circuits. Later models equipped with the OBD II system can also detect component and system performance.

These OBD systems are an integral part of your troubleshooting process and will weigh heavily in your diagnostic outcome.

Diagnostic Toolset

The Diagnostic Toolset consists of the Diagnostic Tester and the Vehicle Break-out Box (V-BoB). Depending on the vehicle you are working on and the nature of the customer concern, both of these tools are extremely valuable for gathering large quantities of diagnostic data in a relatively short period of time. For troubleshooting engine control system concerns, the Diagnostic Toolset allows you to quickly perform the following functions:

- Read and define Diagnostic Trouble Codes (DTCs)
- Display serial data stream containing sensor, actuator, and diagnostic information
- Display signal voltages on a fully adjustable laboratory oscilloscope
- Store and playback snapshot data.
- Test sensors and actuators dynamically using Active Tests
- All CARB OBD II functions

Diagnostic Toolset with TIS

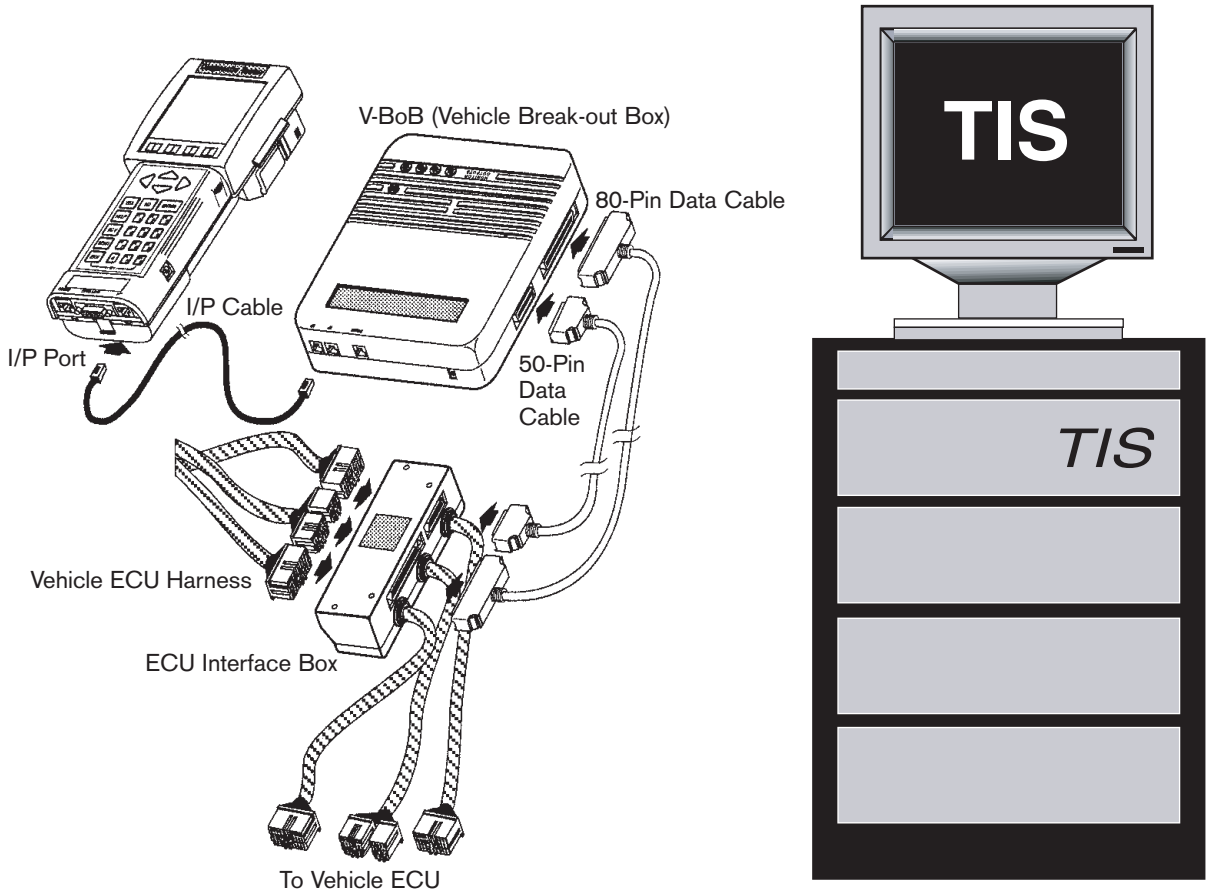

Fig. 1-1

TL874f101

TechView

TechView is a computer-based program that works hand in hand with the Diagnostic Tester. This tool aids in collecting live data from the vehicle where the technician can view the data in a variety of formats (graphs, charts, lists) and store files for later viewing. Some of the TechView features include:

- Real Time Data List
- Tester Snapshot Data
- DTC Information
- OBD System Monitors
- Freeze Frame Data
- File Information

Each technician creates a user name where all of the vehicle information is stored and can be used again for future reference.

Before using the Diagnostic Tester, the Diagnostic Toolset Manual should be read thoroughly.

General OBD II Scan Tool or Diagnostic (Hand-held) Tester Procedure

If the Diagnsotic Tester cannot communicate with ECU controlled systems when connected to DLC3, the ignition switch is ON, and the Diagnostic Tester is on, there is a problem on the vehicle side or tool side.

(1)If communication is normal when the Diagnostic Tester is connected to another vehicle, inspect the diagnosis data link line (Bus≈line) or ECM (ECU) power circuit of the vehicle.

(2)If communication is still not possible when the Diagnostic Tester is connected to another vehicle, the problem is probably in the Diagnostic Tester itself, so perform the Self Test procedures outline in the Diagnostic Toolset Operator's Manual.

Customer Problem Analysis

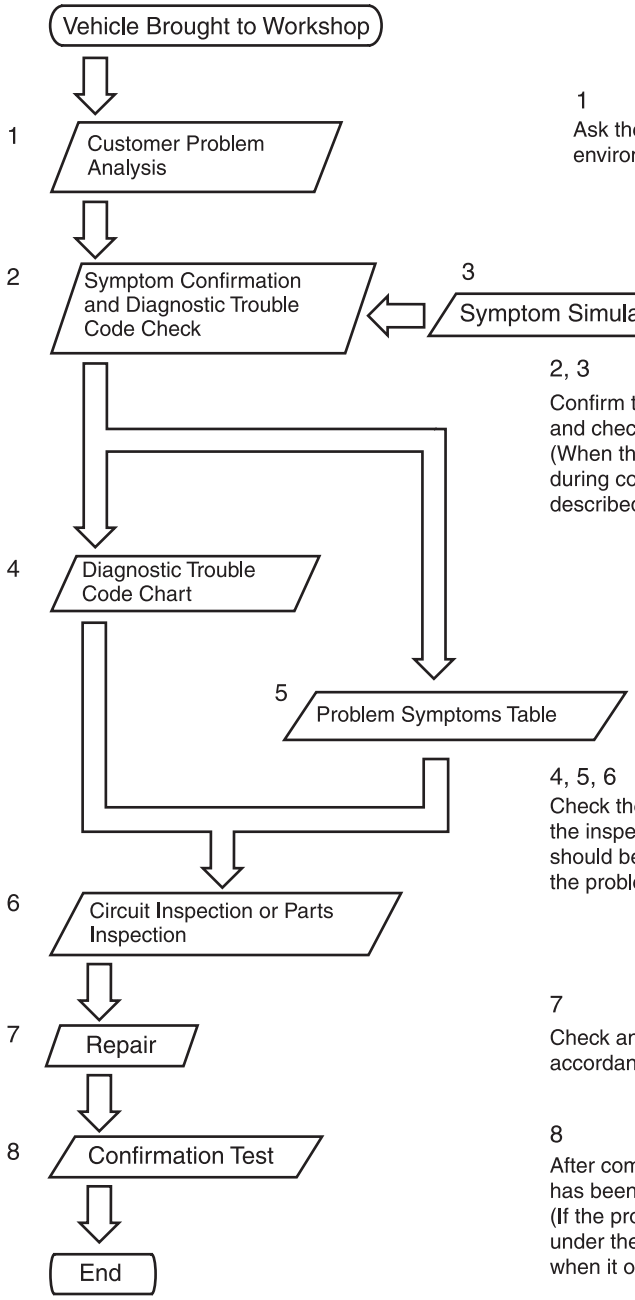

1
Ask the customer about the conditions and the environment when the problem occurred

2, 3
Confirm the symptoms and the problem condition and check the diagnostic trouble codes.
(When the problem symptoms do not appear during confirmation, use the symptom simulation method described later on.)

4, 5, 6
Check the results obtained in Step 2, then confirm the inspection procedure for the system or the part which should be checked using the diagnostic trouble code chart or the problem symptoms table.

7
Check and repair the affected system or part in accordance with the instructions in Step 6.

8
After completing repairs, confirm that the problem has been eliminated.
(If the problem is not reproduced, perform the confirmation test under the same conditions and in the same environment as when it occurred for the first time.)

Fig. 1-2

TL874f102

Customer Problem Analysis (1)

In troubleshooting, the problem symptoms must be confirmed accurately and all preconceptions must be cleared away to give an accurate judgment. To ascertain just what the problem symptoms are, it is extremely important to ask the customer about the problem and the conditions at the time it occurred.

Important Point in the Problem Analysis

The following five items are important points in the problem analysis. Past problems which are thought to be unrelated and the repair history, etc., may also help in some cases, so as much information as possible should be gathered and its relationship with the problem symptoms should be correctly ascertained for reference in troubleshooting. A customer problem analysis table is provided in the Diagnostics section for each system for your use.

The Five Major Questions

Important Points in the Customer Problem Analysis

- What?... Vehicle model, system name
- When?... Date, time, occurrence frequency
- Where?... Road conditions
- Under what conditions?... Running conditions, driving conditions, weather conditions
- How did it happen?... Problem symptoms

Fig. 1-3
TL874f103

Customer Problem Analysis Check Sheet

CUSTOMER PROBLEM ANALYSIS CHECK

ENGINE CONTROL SYSTEM Check Sheet Inspector's Name _____

Customer's Name		Model and Model Year	
Driver's Name		Frame No.	
Data Vehicle Brought in		Engine Model	
License No.		Odometer Reading	km miles

Problem Symptoms		
☐ Engine does not Start	☐ Engine does not crank ☐ No initial combustion ☐ No complete combustion	
☐ Difficult to Start	☐ Engine cranks slowly ☐ Other _____	
☐ Poor Idling	☐ Incorrect first idle ☐ Idling rpm is abnormal ☐ High (rpm) ☐ Low (rpm) ☐ Rough idling ☐ Other _____	
☐ Poor Drive ability	☐ Hesitation ☐ Back fire ☐ Muffler explosion (after-fire) ☐ Surging ☐ Knocking ☐ Other _____	
☐ Engine Stall	☐ Soon after starting ☐ After accelerator pedal depressed ☐ After accelerator pedal released ☐ During A/C operation ☐ Shifting from N to D ☐ Other _____	
☐ Others		

☐ Constant ☐ Sometimes (times per day/month)

Fig. 1-4
TL874f104

Symptom Confirmation and Diagnostic Trouble Code Check (2)

The diagnostic system fulfills various functions. The first function is the Diagnostic Trouble Code Check. A malfunction in the signal circuits to the ECM is stored in code in the ECM's memory at the time of occurrence. This DTC is retrieved by the technician during troubleshooting.

Another function is the Input Signal Check, which checks if the signals from various switches are sent to the ECM correctly. By using these check functions, the problem areas can be narrowed down quickly and troubleshooting can be performed effectively.

In diagnostic trouble code check, it is very important to determine if the problem indicated by the diagnostic trouble code is present or occurred in the past and returned to normal.

In addition, it must be checked in the problem symptom check whether the malfunction indicated by the diagnostic trouble code is directly related to the problem symptom or not. For these reasons, the diagnostic trouble codes should be checked before and after the symptom confirmation to determine the current conditions, as shown in the following figure.

If this is not done, it may, depending on the case, result in unnecessary troubleshooting for normally operating systems, thus making it more difficult to locate the problem, or in repairs not pertinent to the problem. Therefore, always follow the procedure in correct order and perform the diagnostic trouble code check.

DTC Check Procedure

DIAGNOSTIC TROUBLE CODE CHECK PROCEDURE

Diagnostic Trouble Code Check (Make a note of and then clear)	Confirmation of Symptoms	Diagnostic Trouble Code Check	Problem Condition
Diagnostic Trouble Code Display	Problem symptoms exist	Same diagnostic trouble code is displayed	Problem is still occuring in the diagnostic circuit
		Normal code is displayed	The problem is still occurring in a place other than in the diagnostic circuit (The diagnostic trouble code displayed first is either for a past problem or it is a secondary problem)
	No problem symptoms exist		The problem occurred in the diagnostic circuit in the past
Normal Code Display	Problem symptoms exist	Normal code is displayed	The problem is still occurring in a place other than in the diagnostic circuit
	No problem symptoms exist	Normal code is displayed	The problem occurred in a place other than in the diagnostic circuit in the past

Fig. 1-5

TL874f105

DTC Check Procedure

Taking into account the points on the previous page, a flow chart showing how to proceed with troubleshooting using the diagnostic trouble code check is shown here. This flow chart shows how to utilize the diagnostic trouble code check effectively, then by carefully checking the results, indicates how to proceed either to diagnostic trouble code troubleshooting or to troubleshooting of problem symptoms table.

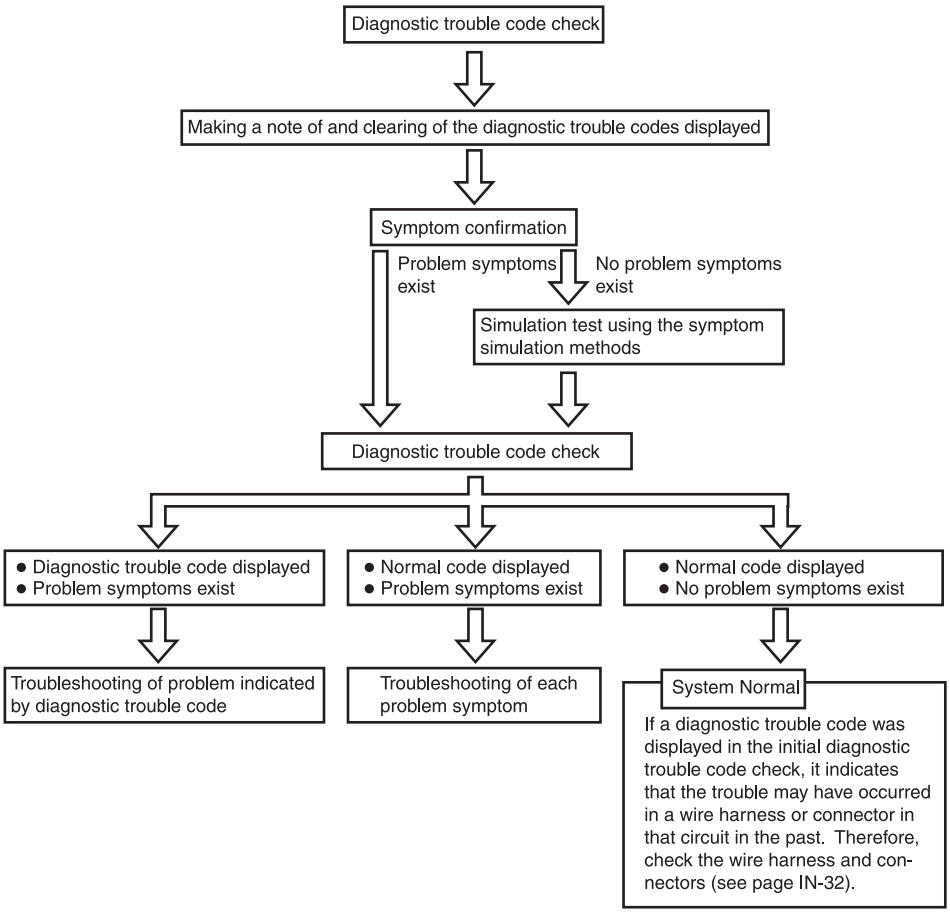

Fig. 1-6

TL874f106

Symptom Simulation (3)

The most difficult cases to diagnose is when no problem symptoms are occurring. In such cases, a thorough customer problem analysis must be carried out, then simulate the same or similar conditions and environment in which the problem occurred in the customer's vehicle.

No matter how much experience or how skilled the technician is, to proceed to troubleshoot without confirming the problem symptoms will often result in wasted time and failure to resolve the customer concerns. For example, for a problem which only occurs when the engine is cold, the problem can never be determined so long as the symptoms are confirmed when the engine is hot.

Since vibration, heat or water penetration (moisture) are likely causes for problems that are difficult to reproduce, the symptom simulation tests introduced here are effective measures to apply to the vehicle.

Important Points in the Symptom Simulation Test:
In the symptom simulation test, the problem symptoms should of course be confirmed, but the problem area or parts must also be found out. To do this, narrow down the possible problem circuits according to the symptoms before starting this test and connect a tester beforehand. After that, carry out the symptom simulation test, judging whether the circuit being tested is defective or normal and also, confirming the problem symptoms at the same time.

Refer to the problem symptoms table for each system to narrow down the possible causes of the symptom.

Vibration Method

Do not do this until you have confirmed that the recorded DTC is not present.

1	**VIBRATION METHOD: When vibration seems to be the major cause.**
CONNECTORS Slightly shake the connector vertically and horizontally. **WIRE HARNESS** Slightly shake the wire harness vertically and horizontally. The connector joint, fulcrum of the vibration, and body through portion are the major areas to be checked thoroughly.	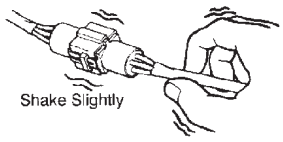 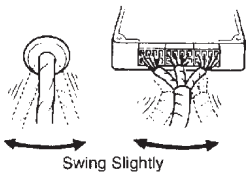
PARTS AND SENSOR Apply slight vibration with a finger to the part of the sensor considered to be the problem cause and check that the malfunction occurs. HINT: Applying strong vibration to relays may result in open relays.	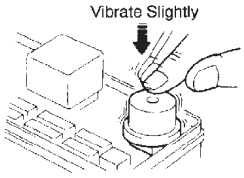

Fig. 1-7
TL874f1107

Other Methods for Simulating Conditions

2	**HEAT METHOD: When the problem seems to occur when the suspect area is heated.**
Heat the component that is the likely cause of the malfunction with a hair dryer or similar object. Check to see if the malfunction occurs. **NOTICE:** **(1) Do not heat to more than 60 °C (140 °F). (Temperature is limited not to damage the components.)** **(2) Do not apply heat directly to parts in the ECU.**	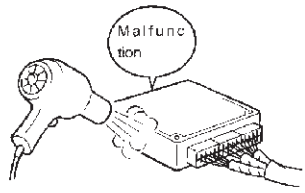 FI2334
3	**WATER SPRINKLING METHOD: When the malfunction seems to occur on a rainy day or in a high-humidity condition.**
Sprinkle water onto the vehicle and check to see if the malfunction occurs. **NOTICE:** **(1) Never sprinkle water directly into the engine compartment, but indirectly change the temperature and humidity by applying water spray onto the radiator front surface.** **(2) Never apply water directly onto the electronic components.** HINT: If a vehicle is subject to water leakage, the leaked water may contaminate the ECU. When testing a vehicle with a water leakage problem, special caution must be taken.	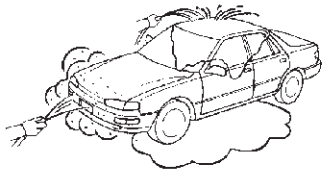 FI6649
4	**OTHER: When a malfunction seems to occur when electrical load is excessive.**
Turn on all electrical loads including the heater blower, head lights, rear window defogger, etc. and check to see if the malfunction occurs.	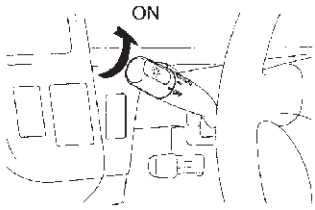 BD2389

Fig. 1-8

TL874f108

Diagnostic Troubleshooting Check (4)

The inspection procedure is shown in the following figure. This table permits efficient and accurate troubleshooting using the diagnostic trouble codes displayed in the diagnostic trouble code check. Proceed with troubleshooting in accordance with the inspection procedure given in the diagnostic chart corresponding to the diagnostic trouble codes displayed

DTC Chart

- **DTC No.**
  Indicates the diagnostic trouble code.
- **Page or Instructions**
  Indicates the page where the inspection procedure for each circuit is to be found, or gives instructions for checking and repairs.

- **Trouble Area**
  Indicates the suspect area of the problem.

- **Detection Item**
  Indicates the system of the problem or contents of the problem.

DTC CHART (SAE Controlled)

HINT:
Parameters listed in the chart may not be exactly the same as your reading due to the type of instrument or other factors.

If a malfunction code is displayed during the DTC check mode, check the circuit for that code listed in the table below. For details of each code, turn to the page referred to under the "See page" for the respective "DTC No." in the DTC chart.

DTC No. (See page)	Detection Item	Trouble Area	MIL*	Memory
P0100 (DI-24)	Mass Air Flow Circuit Malfunction	• Open or short in mass air flow meter circuit • Mass air flow meter • ECM	○	○
P0101 (DI-28)	Mass Air Flow Circuit Range/ Performance Problem	• Mass air flow meter	○	○
P0110 (DI-29)	Intake Air Temp. Circuit Malfunction	• Open or short in intake air temp. sensor circuit • Intake air temp. sensor • ECM	○	○
P0115 (DI-33)	Engine Coolant Temp. Circuit Malfunction	• Open or short in engine coolant temp. sensor circuit • Engine coolant temp. sensor • ECM	○	○
P0116 (DI-37)	Engine Coolant Temp. Circuit Range/Performance Problem	• Engine coolant temp. sensor • Cooling system	○	○
	/Pedal Position Sensor/Switch nction	• Open or short in throttle position sensor circuit • Throttle position sensor • ECM		
	sition Sensor/Switch formance Prob-	• Throttle position sensor		

Fig. 1-9

TL874f109

Problem Symptoms Table (5)

The suspected circuits or parts for each problem symptom are shown in the table below. Use this table to troubleshoot the problem when a "Normal" code is displayed in the diagnostic trouble code check but the problem is still occurring. Numbers in the table indicate the inspection order in which the circuits or parts should be checked.

When the problem is not detected by the diagnostic system even though the problem symptom is present, it is considered that the problem is occurring outside the detection range of the diagnostic system, or that the problem is occurring in a system other than the diagnostic system.

Problem Symptoms Table

- **Page**
  Indicates the page where the flow chart for each circuit is located.
- **Circuit Inspection, Inspection Order**
  Indicates the circuit which needs to be checked for each problem symptom. Check in the order indicated by the numbers.
- **Circuit or Part Name**
  Indicates the circuit or part which needs to be checked.
- **Problem Symptom**

PROBLEM SYMPTOMS TABLE

Symptom	Suspect Area	See page
Engine does not crank (Does not start)	1. Starter and starter relay	ST–2 ST–17
No initial combustion (Does not start)	1. ECM power source circuit 2. Fuel pump control circuit 3. Engine control module (ECM)	DI–147 DI–151 IN–29
No complete combustion (Does not start)	1. Fuel pump control circuit	DI–151
Engine cranks normally (Difficult to start)	1. Starter signal circuit 2. Fuel pump control circuit 3. Compression	DI–144 DI–151 EM–3
Cold engine (Difficult to start)	1. Starter signal circuit 2. Fuel pump control circuit	DI–144 DI–151
Hot engine	1. Starter signal circuit 2. Fuel pump control circuit	DI–144 DI–151
[illegible] idle speed (Poor idling)	1. A/C signal circuit (Compressor circuit) 2. ECM power source circuit	AC–88
[illegible] ing)	1. A/C signal circuit 2. Fuel pump control circuit	
[illegible]	1. Compression [illegible]	

Fig. 1-10

TL874f110

Circuit Inspection (6)

How to read and use each page is shown in the following figures. This chart provides the procedure to diagnose a circuit or system. Often, you will use the Diagnostic Tester, DVOM, or oscilloscope to diagnose faults in a circuit.

Circuit Inspection

- **Diagnostic Trouble Code No. and Detection Item**

- **Circuit Description**
  The major role and operation, etc. of the circuit and its component parts are explained.

DTC	P0325	Knock Sensor 1 Circuit Malfunction

CIRCUIT DESCRIPTION

Knock sensor is fitted to the cylinder block to detect engine knocking. This sensor contains a piezoelectric element which generates a voltage when it becomes deformed, which occurs when the cylinder block vibrates due to knocking. If engine knocking occurs, ignition timing is retarded to suppress it.

DTC No.	DTC Detecting Condition	Trouble Area
P0325	No knock sensor 1 signal to ECM with engine speed, 1,200 rpm or more.	• Open or short in knock sensor1 circuit • Knock sensor 1 (looseness) • ECM

If the ECM detects the above diagnosis conditions, it operates the fail safe function in which the corrective retard angle value is set to the maximum value.

- Indicates the diagnsotic trouble code, diagnostic trouble code set parameter and suspect area of the problem.

- **Wiring Diagram**
  This shows a wiring diagram of the circuit.
  Use this diagram together with ELECTRICAL WIRING DIAGRAM to thoroughly understand the circuit.
  Wire colors are indicated by an alphabetical code.

  B = Black, L = Blue, R = Red, BR = Brown,
  LG = Light Green, V = Violet, G = Green,
  O = Orange, W = White, GR = Gray, P = Pink,
  Y = Yellow, SB = Sky Blue

  The first letter indicates the basic wire color and the secong letter indicates the color of the stripe.

Wiring Diagram

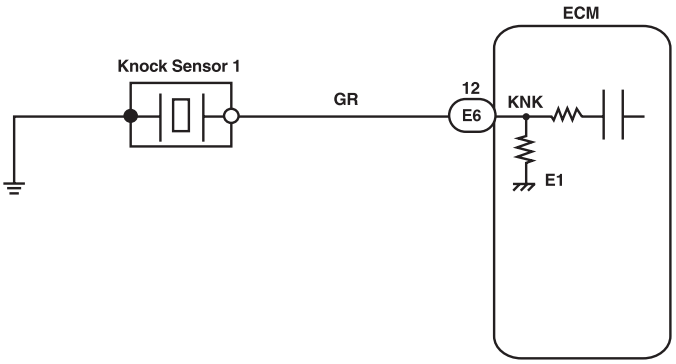

Fig. 1-11

TL874f111

Inspection Procedure

- Indicates the position of the ignition switch during the check.

LOCK
Ignition Switch LOCK (OFF)

ON
Ignition Switch ON

START
Ignition Switch START

ACC
Ignition Switch ACC

- Inspection Procedure
  Use the inspection procedure to determine if the circuit is normal or abnormal, and, if it is abnormal, use it to determine whether the problem is located in the sensors, actuators, wire harness or ECU.

INSPECTION PROCEDURE

1 **Check continuity between terminal KNK of ECM connector and body ground.**

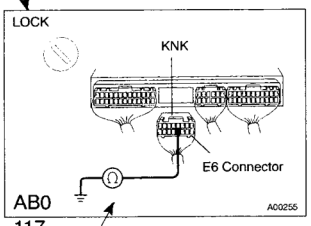

PREPARATION:
(a) Remove the glove compartment (See page SF–68).
(b) Disconnect the E6 connector of ECM.

CHECK:
Measure resistance between terminal KNK of ECM connector and body ground.

OK:
Resistance: 1 MΩ or higher

AB0 117
A00 265

OK → **Go to step 3.**

NG

2 **Check knock sensor (See page SF–61).**

OK → **Replace knock sensor.**

- Indicates the place to check the voltage or resistance.
- Indicates the connector position to be checked, from the front or back side.

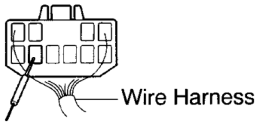

Check from the connector back side. (with harness)

Check from the connector front side. (without harness)
In this case, care must be taken not to bend the terminals.

- Indicates the condition of the connector of ECU during the check.

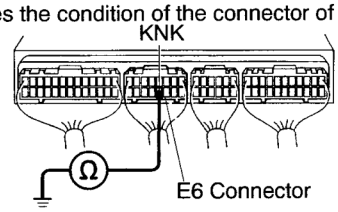

Connector being checked is connected.

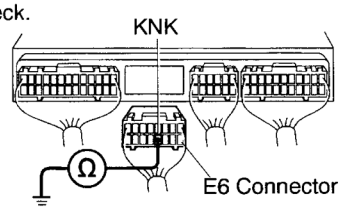

Connector being checked is disconnected.

Fig. 1-12
TL874f112

Repair the Problem (7)

In electrical/electronic diagnostics, you will frequently encounter situations where diagnosis consumes 90% of the actual repair time. By using this procedure to narrow down the number of tests you perform, you can reduce diagnostic time.

After successfully locating the faulty circuit and pinpointing the fault, repair is a relatively simple matter. It is important, however, to ensure customer satisfaction after the repair by performing one last step before releasing the vehicle.

On occasion, you will have to diagnose and repair vehicles with compound problems. To ensure that the vehicle is operating normally, and that the original symptom has been remedied, a quick quality control check of the vehicle is performed. This is accomplished during the Repair Confirmation step.

Repair Confirmation (8)

This is always the final step in diagnosis. Regardless of how you arrived at this step, there are always several items you want to confirm before releasing the vehicle to your customer. The items you will be looking for during this quality control quick check are:

- Satisfactory driveability under the problem conditions stated by the customer
- Repair Confirmation (Readiness Tests) where indicated completed
- All DTC(s) eliminated from ECM keep alive memory

These last two items can be confirmed using the Diagnostic Tester. Once confirmed, the vehicle can be returned to the customer. You can be confident that by following these procedures, in the order given, that you will repair the vehicle with a high rate of success in the shortest possible time.

Problems Which Cannot Be Duplicated

You cannot attempt to fix a problem that does not exist. Therefore, in cases where the problem cannot be duplicated, better communication with the owner, or outside assistance, may offer a solution.

Owner Perception: Sometimes an owner perceives a “normal” operating condition to be a problem. The best way to identify these cases is to accompany the owner on a “road test.” Let the customer drive and point out the problem condition during the road test.

WORKSHEET 1–1
General Diagnostic Tester Procedure

Vehicle	Year/Prod. Date	Engine	Transmission

Worksheet Objectives

When troubleshooting using the Diagnostic Tester, there are general procedures that will aid in troubleshooting the vehicle. This worksheet will familiarize you with those procedures.

Section 1:

1. The primary purpose of the Customer Problem Analysis Check sheet is:

_____

2. The DTC Check procedure is used to confirm if the problem is present or can be duplicated. What are three possible outcomes from this procedure?

_____

_____

_____

3. What are the four methods for simulating conditions?

_____

_____

_____

_____

4. When is the Problem Symptoms Table used?

_____

5. Name four items of information found in the Circuit Inspection.

_____

_____

_____

_____

6. Name three items that are checked during the Repair Confirmation.

_____

_____

_____

_____

WORKSHEET 1-2
Diagnostic Tester

Vehicle	Year/Prod. Date	Engine	Transmission

Worksheet Objectives

Display data using a variety of Diagnostic Tester modes that will aid in troubleshooting and interpreting the results.

Tools and Equipment

- Vehicle
- Repair Manual, EWD, & NCF
- Diagnostic Tester & Manual
- Diagnostic Tester Printer
- Hand Tools, Fender Covers, Floor Mats, and Shop Towels

Section 1: Setup

1. On a vehicle selected by the instructor, warm up the vehicle and connect the Diagnostic Tester to the vehicle. Refer to the Diagnostic Tester Manual for specific setup instructions if needed.

Section 2: DATA LIST

1. Select DATA LIST mode under ENHANCED OBD II.

2. Compare ALL DATA List to the EXTENDED DATA List. What is the major difference between these lists?

_____

Section 3: LED/LIST Mode

1. Select LED/LIST mode

2. Observe DATA LIST. When would you use this mode?

_____

3. Reorder LED/LIST parameters according to instructor's directions.

Section 4: BAR GRAPH Mode

1. Select BAR GRAPH mode

2. Observe DATA LIST. When would you use this mode?

_____

3. Reorder LED/LIST parameters according to instructor's directions.

Section 5: STRIP CHART Mode

1. Select STRIP CHART mode. Select and list 5 parameters as identified by the instructor.

_____ _____

_____ _____

_____ _____

2. Observe DATA LIST. When would you use this mode?

_____

Section 6: CUSTOM DATA Mode

1. Select CUSTOM DATA mode. Select and list below the 6 parameters as identified by the instructor.

_____ _____

_____ _____

_____ _____

2. Observe DATA LIST. When would you use this mode?

_____

Section 7: SNAPSHOT Mode

1. Select SNAPSHOT mode. Select and list below the 6 parameters as identified by the instructor.

_____ _____

_____ _____

_____ _____

2. Prepare to create a fault as identified by your instructor. You will create the fault during a snapshot capture. Write below the type of fault, any terminal pin numbers used, and the intended DTC.

_____

_____

_____

3. Create a snapshot with the fault recorded. Replay the captured snapshot and repeat if the fault was not recorded. Remove the fault when done and return vehicle to original condition.

4. What DTC(s) were recorded?

_____

5. Clear DTC(s)

6. When would you use SNAPSHOT mode?

_____

7. Switch to another team's SNAPSHOT file and diagnose the cause. What was the fault?

Vehicle: _____ Fault: _____

Vehicle: _____ Fault: _____

Vehicle: _____ Fault: _____

Notes

Diagnostic Tester

Name: _____ Date: _____

Review this sheet as you are doing the worksheet. Check each category after completing the worksheet and instructor presentation. Ask the instructor if you have questions. The comments section is for you to write where to find the information, questions, etc.

Topic	*I have questions*	*I know I can*	Comment
Open Data List in CARB and ENHANCED OBD			
View data in LIST/LED format and describe the advantage of this mode			
View data in Strip Chart mode and describe the advantage of this mode			
Save and view a SnapShot and describe the advantage of this mode			
Interpret vehicle condition based on Data Lists			
Retrieve DTC(s), Freeze Frame and CARB Readiness data			

Notes

WORKSHEET 1-3
TechView Operation

Vehicle	Year/Prod. Date	Engine	Transmission

Worksheet Objectives

In this worksheet, you will diagnose a vehicle by viewing the vehicle's Real Time Data. You will then practice saving and opening files.

Tools and Equipment

- Diagnostic Tester
- TIS with Tech View
- Hand Tool Set

NOTE: Follow the instructions and steps in the TechView Guide before proceeding.

Section 1: Problem Solving using TechView

1. Under the direction of the instructor, create a problem with the vehicle.

2. Save the DATA LIST only. Make sure the problem can be seen from the DATA LIST. Clear DTC(s) from the vehicle.

3. You will rotate through the other workstations. Write down the vehicle and the cause of the problem.

_____

_____

_____

_____

Notes

TechView Operation

Name: _____ Date: _____

Review this sheet as you are doing the worksheet. Check each category after completing the worksheet and instructor presentation. Ask the instructor if you have questions. The comments section is for you to write where to find the information, questions, etc.

Topic	*I have questions*	*I know I can*	Comment
Open a new file			
Save a file			
Open and resave an existing file			
Display data in all TechView formats and describe the advantage of each mode			
Save Data Lists in TechView			
Retrieve DTC(s), Freeze Frame and CARB Readiness data			
Retrieve SnapShot data			
Interpret data from TechView to diagnose the root cause of a problem			

Notes

Section 2

On-Board Diagnostic Systems

Overview

On-Board Diagnostic (OBD) systems use the vehicle's computer(s) to detect problems with components or systems and report these problems to driver and technician. Engine OBD systems are, in part, governed by regulations and divided into two major categories:

- OBD I
- OBD II (phased in beginning 1996 MY)

In 1988, the California Air Resources Board (CARB) set the requirement that all vehicles have a system that could identify faults in the emission and powertrain system. This is recognized as OBD I.

At the same time, CARB also set the requirements for OBD II. The Federal government adopted these requirements and they went into effect beginning in 1996. OBD II standards greatly enhanced the On-Board diagnostic system's capabilities and changed the way technicians troubleshoot engine and emission control systems.

In either case, the manufacturer can provide additional diagnostic capabilities. For the technician, understanding what the OBD system is capable of and its limitations will help in fixing vehicles right the first time.

OBD systems report data to the technician by a Malfunction Indicator Lamp (MIL) located in the instrument cluster and Diagnostic Tester.

OBD I Regulations

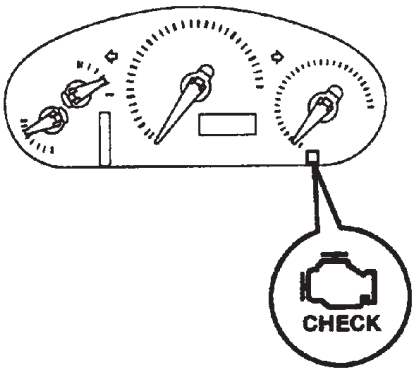

- Current related checks (open or short)
- Limited system monitoring (A/F & EGR)
- Minimal use of rationality checks
- Limited DTC(s)
- Limited use of Serial data
- System and component names not standardized
- DTC(s) not standardized

Fig. 2-1
TL874f201

OBD I (On-Board Diagnostic System, (Generation 1)

In April 1985, the California Air Resources Board (CARB) approved On-Board Diagnostic system regulations, referred to as OBD. Beginning in 1988, these regulations were phased in to include cars and light trucks marketed in the State of California. They required that the ECM monitor critical emission related components for proper operation and illuminate a malfunction indicator lamp (MIL) on the instrument panel when a malfunction was detected.

Although the OBD regulations initially apply to California emissions certified vehicles, some or all of the OBD system features are found on Federal emissions certified vehicles as well.

The OBD system uses Diagnostic Trouble Codes (DTC) and fault isolation logic charts in the Repair Manual, to assist technicians in determining the likely cause of engine control and emissions system malfunctions.

The basic objectives of this regulation are:

- To improve in-use emissions compliance by alerting the vehicle operator when a malfunction exists.
- To aid repair technicians in identifying and repairing malfunctioning circuits in the emissions control system.

OBD applies to systems that are considered most likely to cause a significant increase in exhaust emissions when a malfunction occurs. Commonly, this includes:

- All major engine sensors
- The fuel metering system
- Exhaust Gas Recirculation (EGR) function

Components and circuits are monitored for continuity, shorts, and in some cases, normal parameter range. OBD systems were normally limited to the detection of an open or short in a sensor circuit.

OBD Malfunction Indicator Lamp (MIL)

The MIL is required to serve as a visual alert to the driver of a malfunction in the system. When a malfunction occurs, the MIL remains illuminated as long as the fault is detected and goes off once normal conditions return, leaving a Diagnostic Trouble Code (DTC) stored in the ECM memory.

OBD Diagnostic Trouble Codes (DTC)

DTC(s) are generated by the on-board diagnostic system and stored in the ECM memory. They indicate the circuit in which a fault has been detected. DTC information remains stored in the ECM long-term memory regardless of whether a continuous (hard) fault or intermittent fault caused the code to set. OBD vehicles store a DTC in the ECM long-term memory until power is removed from the ECM. In most cases, the EFI fuse powers this long-term (keep alive) memory.

OBD II

- Circuit continuity and out of range values monitored
- System monitored
- Rationality checks used (logic)
- Expanded DTC(s)
- Freeze Frame Data stored with DTC
- Serial Data required
- Active Tests
- Standards established

Fig. 2-2
TL8741202

ODB II (On-Board Diagnostic System, Generation 2)

OBD II requires the ECM to monitor the effectiveness of the major emission control systems and to turn on the MIL when a malfunction is detected or when the performance of the emission system(s) has deteriorated to where the emission output will exceed the allowed emission levels.

All vehicles sold in the United States are certified through the Federal Test Procedure (FTP). It is the FTP that tests and sets maximum emission levels in accordance with government regulations. The MIL must light when a component or system will cause the vehicle's emission levels to exceed 1-1/2 times the FTP standard. This means that the OBD II system must test the performance of a system or component. For example, the ECM OBD system monitors catalytic converter efficiency. If catalytic converter efficiency is out of range, the MIL will illuminate and a DTC will set.

OBD II Standardization

OBD regulations and technical standards have been developed with the cooperation of the automotive industry and the Society of Automotive Engineers (SAE). These standards provide a common format for data, the Diagnostic Tester, diagnostic test modes, and diagnostic trouble codes regardless of the vehicle manufacturer.

A number of SAE J standards were developed to implement the OBD II system, and these standards are applicable to all vehicle and tool manufacturers. The following list is an example of the areas of standardization:

- **ISO 9141** - (International Standards Organization) Serial Data Protocol
- **J1850** - Serial Data Protocol
- **J1930** - Terms and Definitions
- **J1962** - Standard OBD II Diagnostic Connector
- **J1978** - Generic Scan Tool
- **J1979** - Diagnostic Test Mode and Basic Serial Data Stream
- **J2008** - Electronic Service Information Access and Data Format
- **J2012** - Diagnostic Codes and Messages
- **J2190** - Enhanced Diagnostic Test Modes and Serial Data Streams

What this means to you is:

- that there are common terms used by all manufacturers
- a standardized Data Link Connector (DLC) located under the driver's side of the instrument panel
- access to all OBD II data is acquired with an OBD II compatible scan tool
- common DTCs
- common diagnostic data streams

NOTE A glossary of SAE J1930 and Lexus terms and definitions can be found in the Introduction section of the Repair Manual.

OBD II Monitors

The goal of the OBD II regulation is to provide the vehicle with an on-board diagnostic system capable of continuously monitoring the efficiency of the emission control systems, and to improve diagnosis and repair efficiency when system failures occur.

On-board tests are performed by the ECM. Two types of on-board test monitoring are supported: Continuous and Non-Continuous.

Continuous monitors test components and systems many times, conditions permitting, when the engine is running. Continuous monitored systems/components are:

- Engine Misfire
- Fuel System (Trim)
- Comprehensive Components

Non-Continuous monitors test components and systems one time, conditions permitting, when the engine is running. Non-continuous monitored systems/components are:

- O2 & A/F Sensor
- O2 & A/F Sensor Heater
- EGR System
- Evaporative System
- Catalyst
- Secondary Air System
- Thermostat

Beginning with the 2000 model year, manufacturers were required to phase-in diagnostic strategies to monitor the thermostat operation on vehicles so equipped. In addition, beginning with the 2002 model year, manufacturers will phase-in diagnostic strategies to monitor the PCV system on vehicles so equipped, for system integrity.

Each of these monitors is covered in detail in the following sections.

Malfunction Indicator Lamp (MIL)

Also referred to as a Check Engine Lamp.

Fig. 2-3
TL874f203

OBD II Malfunction Indicator Lamp (MIL)

When a malfunction occurs and meets the criteria to set a DTC, the MIL illuminates and remains illuminated as long as the fault is detected. The MIL will be turned off after 3 warm-up cycles once normal conditions return. A Diagnostic Trouble Code (DTC) will be stored in the ECM memory.

OBD II Diagnostic Trouble Codes (DTC)

Unlike OBD Diagnostic Trouble Codes, OBD II codes have been standardized by SAE. They indicate the circuit or the system in which a fault has been detected.

Once the condition has been confirmed for normal operation, the DTC remains as an active code for 40 drive cycles. The code will automatically be erased after 40 drive cycles, but will remain in the ECM DTC history until cleared.

OBD	OBD II
• Current related checks (open or short) • Limited system monitoring (A/F & EGR) • Minimal use of rationality checks • Limited DTC(s) • Limited use of Serial Data • System and component names not standardized • DTC(s) not standardized • MIL will turn off if problem corrects itself • DTC must be cleared from memory	• Circuit continuity and out of range values monitored • Systems monitored • Rationality checks used for component and system performance (logic) • Expanded DTC(s) • Freeze Frame Data stored with DTC • Serial Data required • Active Tests • Standards established • MIL stays on until 3 consecutive trips have passed without the problem re-occurring • DTC(s) erased after 40 warm-up cycles • OBD II can detect malfunctions that do not effect driveability

Drive Patterns

Drive patterns are a designated set of parameters for the ECM to test components or systems. Many of these tests are based all or in part on the Los Angeles #4 (LA#4), Federal Test Procedure (FTP) driving pattern.

LA#4/FTP Drive Pattern

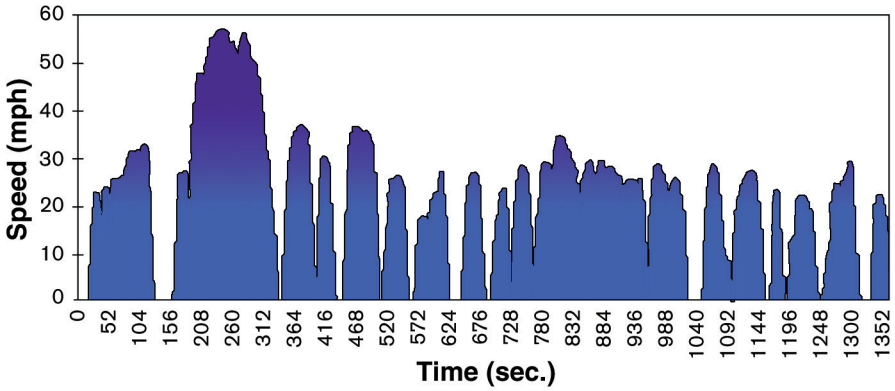

Fig. 2-4

TL874f204

LA#4 Drive Cycle

The Federal Test Procedure (FTP) drive cycle and the LA#4 drive cycle are the same. LA means Los Angeles and 4 means the 4th of the plans submitted to determine the optimum-driving pattern to measure exhaust gases. This pattern was determined while driving in Los Angeles during the morning commuting hours and includes both city and freeway driving.

FTP Drive Cycle

The FTP drive cycle, also known as LA#4, is a standardized drive pattern used for emissions certification. A system may only need a portion of the drive pattern to detect a fault or the pattern needs to be repeated for a two trip DTC fault.

The OBD II drive cycle is the basic set driving conditions for the diagnostic monitors to run. This does not mean that all monitors can be completed with this drive pattern because a warm-up cycle or other additional parameters may be required. Also a test may be interrupted by a fault in another related system.

If a fault is present, a DTC should appear if the driving pattern is completed along with any other operating condition noted in the Repair Manual.

OBD II Trip

The OBD II trip, or "trip", contrasted with the LA#4/FTP drive cycle, consists of an engine start following an engine off period, with enough vehicle travel to allow the OBD II monitoring sequences to complete their tests. The vehicle must be driven under a variety of operation conditions for all tests to be performed.

Trip

A trip is defined as an engine-operation drive cycle that contains all of the necessary conditions for a particular test to be performed. Some DTC(s) may require a warm-up cycle, while others require just a key off cycle.

Completing the trip correctly is necessary to verify a symptom or confirm a successful repair.

Warm-Up Cycle

OBD II standards define a warm-up cycle as a period of vehicle operation, after the engine was turned on, in which coolant temperature rises by at least 22°C (40°F) and reaches at least 88°C (160°F). The ECM determines a cold start by comparing the engine coolant temperature (ECT) and the intake air temperature (IAT).

Confirmation Driving Patterns

The Repair Manual lists special confirmation driving patterns specific to a particular DTC. The confirmation procedure listed may not actually require the vehicle to be driven. The confirmation procedure is designed to verify the operation of a component or system. The conditions listed in the Repair Manual must be strictly followed or the detection of the malfunction will not be possible.

NOTE The confirmation drive pattern may require the use of the Diagnostic Tester. In addition, the instructions may call for switching from normal to check mode.

NOTE The conditions outlined in this section are general and intended to serve as a guide only.

Malfunction Indicator Lamp and Diagnostic Trouble Codes

OBD II regulations require the ECM to light the Malfunction Indicator Lamp (MIL) when the ECM detects a malfunction in the emission control system/components or in the powertrain control components that affect vehicle emissions.

In addition to the MIL lighting when a malfunction is detected, the applicable Diagnostic Trouble Code (DTC) prescribed by SAE J2012 is recorded in the ECM Memory.

MIL ON

There are two basic reasons why the MIL will light and remain on: a failure of a component monitor, or a failure of a system monitor. When the MIL is turned on, a DTC is stored, as well as Freeze Frame data.

NOTE There is the possibility that two Freeze Frame data displays are stored from two DTCs. Refer to the section on Freeze Frame data in this handbook for additional details.

MIL ON One Trip

There are some DTCs that will set in one trip. A one trip DTC will store a code that can be observed in the DTC screen, set a Freeze Frame, and light the MIL.

MIL ON One Trip

In this illustration, the fault occurred during the first trip. The MIL came on when the basic parameters for the diagnostic test were met and the test completed, confirming the fault. Also the DTC and Freeze Frame were recorded in memory when the MIL came on.

Fig. 2-5

TL874f205

MIL ON Two Trip

When a two trip emissions-related fault is detected for the first time, a DTC related to that fault is stored as a pending code. This pending code can often be seen in the Mode 7 screen - Continuous Tests (if the ignition key is not turned off).

If the fault occurs again on the second drive cycle, then the DTC is stored as a current code (can be seen in the DTC screen), and the ECM will turn on the MIL.

The pending fault will be erased if the monitoring sequence does not detect a fault under the same conditions.

MIL ON Two Trip

In this illustration, the fault occurred during the first trip. The MIL came on during the second trip after the basic parameters for the diagnostic test were met and the test completed, confirming the fault. The DTC and Freeze Frame were recorded in memory when the MIL came on during the second trip.

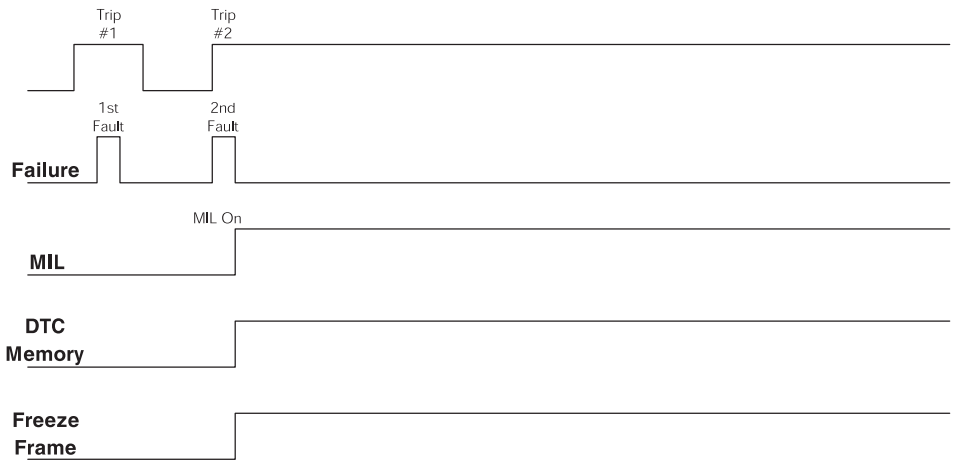

Fig. 2-6
TL874f206

MIL Blinking

The MIL will blink when a misfire occurs that will raise the temperature enough to damage the catalytic converter. The blinking may be intermittent, because of changes in engine load and the severity of engine misfire.

A misfire that will allow emissions to exceed regulations, but not damage the catalyst, will light the MIL but not blink the light. The MIL will light on the second trip if the misfire occurs under similar conditions. See Misfire Diagnosis for more details.

MIL Blinking

When a misfire occurs that is severe enough to damage the Catalytic Converter the MIL will blink during the first trip. If the condition reoccurs during the second trip, the MIL again blinks, the DTC and Freeze Frame are recorded in memory. The MIL will be on solid once the DTC is recorded if the misfire is no longer severe enough to damage the catalyst.

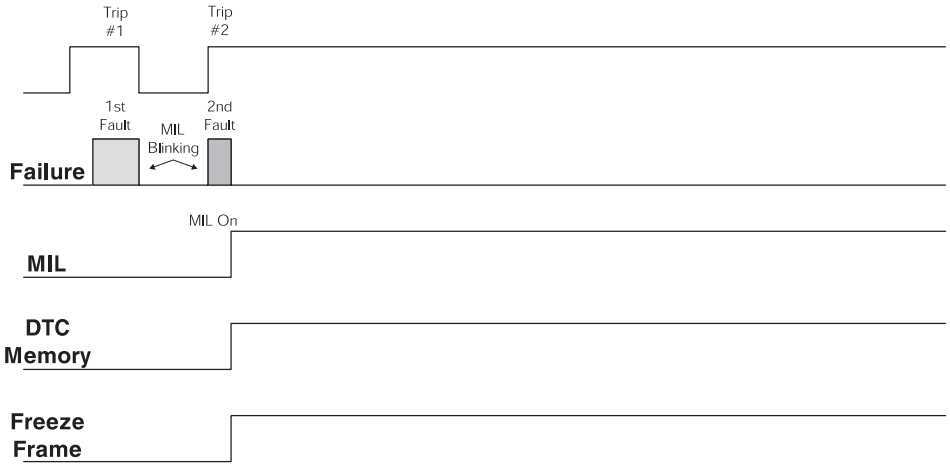

Fig. 2-7
TL874f207

MIL OFF, DTC and Freeze Frame Erased

When the ECM confirms that the fault is no longer present, the MIL is turned off after three trips where the basic parameters for the diagnostic test are met and the test completed without the fault being detected. After 40 warm-up cycles without the fault being detected, the DTC and Freeze Frame are erased from memory as current; however, the DTC and Freeze Frame will remain in DTC history as a history code and Freeze Frame until cleared.

NOTE A DTC found in history, but not related to a current condition is most likely the result of an intermittent condition or previous repair since the conditions that set the code have not recurred for at least 40 cycles.

MIL Off, DTC and Freeze Frame Erased

In this illustration, the fault did not recur after the MIL came on, therefore, the MIL was turned off after three trips without a fault being detected. After 40 successful trips without the fault being detected, the DTC and Freeze Frame were erased from memory. However, the DTC will remain in history until cleared.

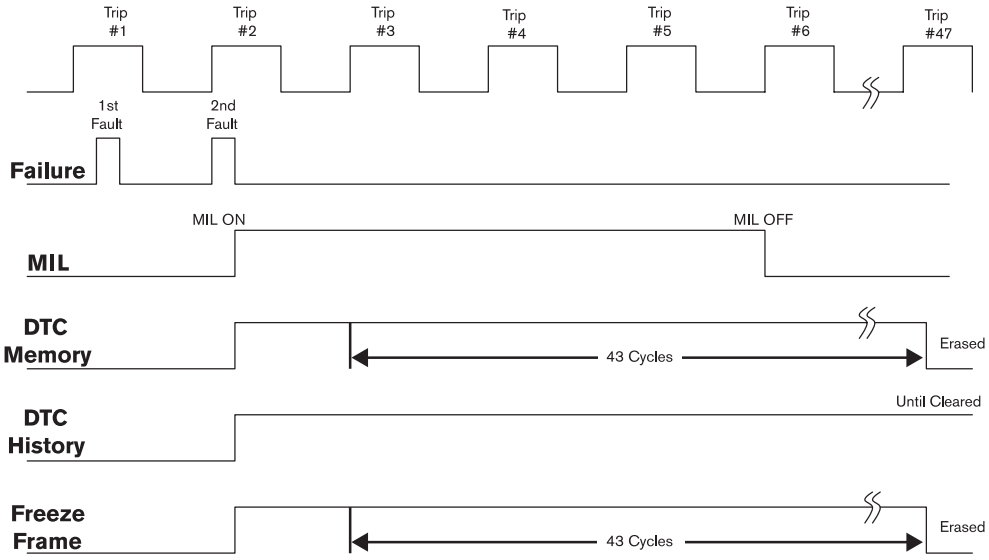

Fig. 2-8

TL874f208

Extinguishing the MIL

Once lit, the MIL will remain on until the vehicle has completed three consecutive good trips (three trips in which the effected diagnostic monitor runs and passes).

Should the MIL blink due to a misfire, the MIL will go off if the misfire is no longer detected. A misfire DTC will be stored if the misfire meets the criteria for storing in the ECM memory.

If the DTC has not been cleared since the MIL was turned off, the erased DTC will be stored in DTC history until the memory is cleared.

Summary of MIL and DTC Operation

Misfire detected severe enough to damage catalytic converter:

- **MIL Blinking** - One trip fault
- **MIL Illumination** - One and two trip faults
- **MIL Extinguished** - Three consecutive trips, fault not detected
- **DTC Memory Erasure** - 40 Warm-up cycles, fault not detected or when cleared with DT
- **DTC History** - DTC is held in history until cleared with DT
- **Freeze Frame Erasure** - 40 Warm-up cycles, fault not detected or when cleared with DT

OBD II Definition

Each DTC is assigned a number to indicate the circuit, component, or system area that was determined to be at fault. The numbers are organized such that different codes related to a particular sensor or system are grouped together.

OBD II Diagnostic Trouble Code Chart

First Digit	Second Digit	Third Digit	Fourth Digit	Fifth Digit
	Prefix Letter of DTC Indicates Component Group Area	SAE or Controlled	Powertrain DTC Subgroup	Area or Component involved
	P = Powertrain	0 = SAE	0 = Total System	
	B = Body	1 = Manufacturer	1 = Fuel and Air Metering	
	C = Chassis		2 = Fuel and Air Metering	
	U = Network Communication		3 = Ignition System or Misfire	
			4 = Auxiliary Emission Controls	
			5 = Speed, Idle, & Auxiliary Inputs	
			6 = ECM and Auxiliary Inputs	
			7 = Transmission	
Example			8 = Transmission	
Fuel Trim Malfunction	P	0	1	71

Manufacturer Enhanced OBD II

OBD II regulations allow the manufacturer to add additional information to the data stream and DTCs. A "1" in the second digit of the DTC code indicates it is a manufacturer specific DTC. Lexus has an enhanced data stream, which consists of 60 or more additional data words. As new systems are created, additional data is added to the data stream.

OBD II Scan Tool Features

When the decision was made to create a scan tool that could access all manufacturers vehicles, it also meant there had to be a standardized way of communicating information to the technician. Common Diagnostic Trouble Codes (DTC) is one aspect. The manufacturer of the vehicle or scan tool can add more data streams, report modes, and diagnostic tests.

The following is a list of modes that every OBD II compatible scan tool and vehicle must support.

CARB MODES	GENERIC TITLE	LEXUS TITLE
Mode 1	Current Powertrain Diagnostic Data	DATA LIST and READINESS TESTS
Mode 2	Powertrain Freeze Frame Data	FREEZE DATA
Mode 3	Emission Related Powertrain DTCs	DTCs
Mode 4	Clear/Reset Emission Related Diagnostic Information	CLEAR DIAG INFO
Mode 5	O2 sensor Monitoring Test Results	O2S TEST RESULTS
Mode 6	On-Board Monitoring Test Results for Non-Continuously Monitoring Systems	NON-CONTINUOUS
Mode 7	On-Board Monitoring Test Results for Continuously Monitored Systems	CONTINUOUS
Mode 8	Request Control of On-Board System Test or Component	EVAP LEAK TEST
Mode 9	Request Vehicle Information	INFORMATION MENU

Mode 1: Current Powertrain Diagnostic Data

This mode provides access to current emission related data values such as inputs, outputs, and system status. All input values that are displayed are current values. No substitute values are permitted if there is a problem with the input sensor/circuit. This information is referred to as serial data and found under Data List.

Data List

```
CURRENT DATA

ENGINE SPD......... 2260RPM
COOLANT TEMP......... 190°F
VEHICLE SPD.......... 60MPH
IGN ADVANCE.......... 38.0°
CALC LOAD............ 37.2%
MAF............... 1.21b/min
THROTTLE POS......... 10.1%
INTAKE AIR............ 93°F
FUEL SYS #1........ OLDRIVE
FUEL SYS #2........ OLDRIVE
SHORT FT #1........... 0.0%
LONG FT #1........... -1.5%
SHORT FT #2........... 0.0%
LONG FT #2........... -1.5%
O2S B1 S1........... 0.705V
O2FT B1 S1............ 0.0%
O2S B1 S2........... 0.120V
O2FT B1 S2........... UNUSED
O2S B2 S1........... 0.660V
O2FT B2 S1............ 0.0%
MIL....................... ON
# CODES.................... 1
MISFIRE MON.......... AVAIL
FUEL SYS MON......... AVAIL
COMP MON............. AVAIL
CAT EVAL............. COMPL
HTD CAT EVAL........... N/A
EVAP EVAL........... INCMPL
2nd AIR EVAL........... N/A
A/C EVAL............... N/A
O2S EVAL............ INCMPL
O2S HTR EVAL........ INCMPL
EGR EVAL............. COMPL
OBD CERT............ OBD II
```

Fig. 2-9

TL874f209

NOTE **The READINESS TEST screen and MONITOR STATUS screen contain identical information. You can use either screen to confirm monitor operation.**

Readiness Test Status

The example to the right shows which monitors have completed and which monitors are available or not available (do not apply to this vehicle). The Non-Continuous monitors have all completed. The Continuous monitors are available and run continuously.

INCMPL stands for incomplete. Incomplete can mean the monitor did not complete, judgment is withheld pending further testing, the monitor did not operate, or the monitor operated and recorded a failure. Please see Modes 6 and 7 for additional details.

```
READINESS TEST

MISFIRE MON.......... AVAIL
FUEL SYS MON......... AVAIL
COMP MON............. AVAIL
CAT EVAL............. COMPL
HTD CAT EVAL........... N/A
EVAP EVAL............ COMPL
2nd AIR EVAL........... N/A
A/C EVAL............... N/A
O2S EVAL............. COMPL
O2S HTR EVAL......... COMPL
EGR EVAL............. COMPL
```

Available (Continuous)

Not Available

Completed (Non-Continuous)

```
READINESS TEST

MISFIRE MON.......... AVAIL
FUEL SYS MON......... AVAIL
COMP MON............. AVAIL
CAT EVAL........... INCMPL
HTD CAT EVAL........... N/A
EVAP EVAL......... INCMPL
2nd AIR EVAL........... N/A
A/C EVAL............... N/A
O2S EVAL........... INCMPL
O2S HTR EVAL....... INCMPL
EGR EVAL........... INCMPL
```

Fig. 2-10

TL874f210

Mode 2: Powertrain Freeze Frame Data

This mode displays emission related values that are stored when the ECM has determined there has been an emission related failure. The manufacturer can add more values beyond the emission related values. All values are actual readings, none are substituted values.

Manufacturers are free to add additional Freeze Frames.

If a fault is detected and recorded, that information is stored as a “Freeze Frame.” The ECM uses this data for identification and comparison of similar operating conditions when they recur. The data is also available to the diagnostic technician for use in identifying what conditions were present when the DTC was set. This information can only be accessed with the Diagnostic Tester.

CARB Freeze Frame

```
FREEZE FRAME   0

TROUBLE CODE......... P0304
ENGINE SPD........... 683RPM
COOLANT TEMP......... 190°F
VEHICLE SPD........... 0MPH
CALC LOAD............ 18.0%
FUEL SYS #1............. CL
FUEL SYS #2............. CL
SHORT FT #1........... 0.8%
LONG FT #1........... -5.4%
SHORT FT #2........... -0.7%
LONG FT #2........... 12.5%
```

Fig. 2-11
TL874f211

Under CARB, only one Freeze Frame is stored with the required data. In Enhanced OBD II, two Freeze Frames are stored with additional data. The CARB Freeze Frame is listed under the CARB menu and accessed from there.

Freeze Frame Data

Freeze Frame information typically includes:

- DTC involved
- Engine RPM
- Engine load
- Fuel trim (short and long term)
- Engine Coolant Temperature
- Calculated load
- Operating mode (open or closed loop)
- Vehicle speed

Enhanced Freeze Frame Priority

Two Freeze Frames can be stored in the Enhanced OBD II mode in the ECM. The first is reserved for information related to misfire and fuel control, which have priority over other DTC(s). The second, if not occupied by one of the priority DTC(s), will store information for the first non-priority DTC that occurs. The Freeze Frame information updates if the condition recurs.

Enhanced Freeze Frame Priority

The first frame is reserved for misfire and fuel control DTC data only. The second frame will store the second misfire or fuel control DTC data first. If the second frame is not used for a priority DTC, the ECM can store data related to other DTC(s).

First Freeze Frame

Second Freeze Frame

Fig. 2-12

TL874f212

Accessing Enhanced Freeze Frame Data

When using the Diagnostic Tester, an * (asterisk) next to the Trouble Code ID indicates there is Freeze Frame data associated with that DTC. If Freeze Frame data is available for the highlighted DTC, press Enter to display the data.

Accessing Enhanced Freeze Frame Data

The Diagnostic Tester screens show stored DTC(s), both priority and non-priority and the Freeze Frame Data stored for each of these DTC(s). The Freeze Frame Data is displayed in the same format for all DTC(s).

Trouble Codes

```
  ECU: $10 (Engine)
  Number of DTCs: 3

* P0304
  Cylinder 4 Misfire
  Detected

  P0100
  Mass or Volume Air
  Flow Circuit Malfunction

* P0110
  Intake Air Temperature
  Circuit Malfunction
```

Priority Freeze Frame

```
TROUBLE CODE......... P0304
CALC LOAD............. 18%
ENGINE SPD.......... 683RPM
COOLANT TEMP....... 190.4°F
INTAKE TEMP........ 125.6°F
CTP SW................... ON
VEHICLE SPD........... 0MPH
SHORT FT #1........... 0.7%
LONG FT #1........... -5.5%
SHORT FT #2........... -0.9%
LONG FT #2........... 12.4%
FUEL SYS #1............. CL
FUEL SYS #2............. CL
FC IDL................. OFF
STARTER SIG............ OFF
A/C SIG................ OFF
PNP SW [NSW]........... ON
ELECT LOAD SIG......... OFF
STOP LIGHT SW.......... OFF
ENG RUN TIME........... 80
```

Non-Priority Freeze Frame

```
TROUBLE CODE......... P0110
CALC LOAD............... 0%
ENGINE SPD.......... 662RPM
COOLANT TEMP....... 192.2°F
INTAKE TEMP........ -40.0°F
CTP SW................... ON
VEHICLE SPD........... 0MPH
SHORT FT #1........... 1.5%
LONG FT #1........... -5.5%
SHORT FT #2........... 1.5%
LONG FT #2........... 12.4%
FUEL SYS #1............. CL
FUEL SYS #2............. CL
FC IDL................. OFF
STARTER SIG............ OFF
A/C SIG................ ON
PNP SW [NSW]........... ON
ELECT LOAD SIG......... OFF
STOP LIGHT SW.......... OFF
ENG RUN TIME............ 0
```

Fig. 2-13

TL874f213

Using Freeze Frame Data for Diagnosis

The Freeze Frame data screen provides information of the conditions that were present at the time the DTC was recorded in memory. By recreating the vehicle speed, engine RPM, and engine load, as well as other conditions noted, the technician can verify the customer's concern.

Mode 3: Emission Related Powertrain DTCs

When in this mode, the Diagnostic Tester retrieves all stored emission related DTCs in the ECM. See MIL ON section for additional details.

Mode 4: Clear/Reset Emission Related Diagnostic Information

When this mode is activated by the Diagnostic Tester, all DTCs, Freeze Frame data, O2 sensor monitoring test results, status of monitoring system test (Readiness Tests) results, and on-board test results are cleared and reset. The Diagnostic Tester and ECM must be able to respond to this request with ignition key on and engine off.

OBD II DTC(s) are automatically erased after 40 warm-up cycles if the failure is not detected again. These 40 cycles begin only after the ECM turns off the MIL. The Freeze Frame data is cleared at the same time. A technician using the Diagnostic Tester can also clear the DTC(s) and freeze frame data, however, this will clear DTC history also.

O2 Sensor Monitoring Screens

```
O2 SENSOR TEST (B1 - S1)

LOW SW V............ 0.350V
HIGH SW V........... 0.550V
MIN O2S V........... 0.025V
MAX O2S V........... 0.790V
Time $31............. 0.04s
Time $32............. 0.04s
```

```
O2 SENSOR TEST (B2 - S2)

MIN O2S V........... 0.085V
MAX O2S V........... 0.785V
```

Fig. 2-14

TL874f214

Mode 5: O2 Sensor Monitoring Test Results

This mode displays the test results of the O2 sensor test monitor. This screen's data can be used as a report on the condition of the O2 sensor(s), and is found under O2S TEST RESULTS.

NOTE

These values are stored values, not current values that are found in Mode 1 (DATA LIST). These values are reported only if the O2 sensor monitor has run. This information is lost if the ignition key is turned off.

Not all test values are applicable to all manufacturers. The A/F sensor test values are not applicable and are not displayed in Mode 5. Some vehicles use Non-Continuous Test Results mode to report results. For more information see the section on O2 and A/F Sensor Diagnosis.

Mode 6: On-Board Monitoring Test Results for Non-Continuous Monitoring Systems

Two different screens showing Pass and Fail. Some vehicles will show TID in place of Time.

- (TID)Time$01 = Catalyst Deterioration
- (TID)Time$02 = Evaporative System Deterioration
- (TID)Time$03 = Not Supported
- (TID)Time$04 = O2 Sensor Heater
- (TID)Time$05 = EGR
- (TID)Time$06 = A/F Sensor
- (TID)Time$07 = A/F Sensor Heater
- (TID)Time$08 = Thermostat Monitor

```
NON-CONTINUOUS TESTS

Time$01 CID$01........ Pass
Time$02 CID$01........ Pass
Time$02 CID$02........ Pass
Time$02 CID$03........ Pass
Time$02 CID$04........ Pass
Time$04 CID$00........ Pass
Time$04 CID$02........ Pass
Time$05 CID$01........ Pass
Time$06 CID$01........ Pass
Time$07 CID$01........ Pass
```

```
NON-CONTINUOUS TESTS

Time$01 CID$01........ Pass
Time$02 CID$01........ Fail
Time$02 CID$02........ Fail
Time$02 CID$03........ Fail
Time$02 CID$04........ Fail
Time$04 CID$00........ Pass
Time$04 CID$02........ Pass
Time$05 CID$01........ Pass
Time$06 CID$01........ Pass
Time$07 CID$01........ Pass
```

Fig. 2-15
TL874f215

Mode 6: On-Board Monitoring Test Results for Non-Continuous Monitoring Systems

This mode reports on the Non-Continuous monitors:

- Catalyst
- Evaporative System
- Secondary Air System
- O2 & A/F Sensor
- O2 & A/F Sensor Heater
- EGR System
- Thermostat

You can use this mode to identify potential problems in the Non-Continuous monitored systems.

The ECM compares the Non-Continuous monitor test data to the test limits and reports to the Diagnostic Tester a Pass or Fail indication for each monitored system/component. This mode will report results in one trip if the monitor runs and completes its testing. The results can be found in Non-Continuous Tests.

Mode 7: On-Board Monitoring Test Results for Continuous Monitoring Systems

This mode reports test results for emission related powertrain components that are Continuously and Non-Continuously monitored in one trip under normal driving conditions. It will report a failure as a DTC. This allows you to test the vehicle for problems and (after clearing DTCs) to check on a repair in one trip. This mode is found in Continuous Tests.

NOTE The DTCs that are initially reported in Continuous Tests and Pending Codes are pending DTCs. If conditions persist, DTCs will be stored in the normal areas.

For a DTC to be reported, the monitor has to be operating, though the monitor may not go to completion. This is the first place a DTC will show up. A two trip DTC reported in this mode on the first trip may not be accurate and may change during monitoring. Another trip is needed to confirm that the reported DTC is valid. If a DTC is reported in this mode there is good reason to suspect that there is a problem with the vehicle and further checks are necessary before returning to the owner.

Please see the section on Continuous Monitors for more information.

Mode 7 Continuous Tests DTC Screen and Pending Codes Screen

```
CONTINUOUS TESTS
ECU:  $10 (Engine)
Number of Tests: 1

P0401
EGR Flow Insufficient
Detected
```

```
PENDING CODES
ECU:  ENGINE
Number of DTCs: 1

P0401
EGR Flow Insufficient
Detected
```

Fig. 2-16

TL874f216

Mode 8: Request Control of On-Board System Test or Component

This mode enables the Diagnostic Tester to control the ECM in order to test the system and related components. Currently, the EVAP leak test procedure is under this mode. When the EVAP leak test is enabled, it sets the conditions for leak testing but does not conduct a leak test.

Mode 8 EVAP Leak Test

```
EVAP LEAK TEST

This test mode
enables conditions
required to conduct
an evaporative
system leak test,
but does not
run the test.

Press [ENTER]
```

Fig. 2-17

TL874f217

Mode 9: Request Vehicle Information

This mode reports the following if the ECM supports this function:

- Vehicle Identification Number
- Calibration Identification
- Calibration Verification

This mode is found in Information Menu.

Mode 9 Vehicle Information

```
VEHICLE ID

******************
JT2ST07N150015566
******************

Press [ENTER]
```

```
ECU $10, CAL ID:01
     73309069

ECU $10, CAL ID:02
     83309012

[ENTER]
```

```
ECU $10, CVN:4567
```

Fig. 2-18

TL874f218

How to Proceed with Troubleshooting OBD II Systems

The following steps provide a general outline with explanations for troubleshooting OBD II systems. There are slight variations in different years and with different models. Please review the procedure, General OBD II Scan Tool or Diagnostic (Hand-held) Tester Procedure in Section 1 before reading this section.

Troubleshooting OBD II systems involves a series of steps as listed in the figure 2-19 on the following page. The order will vary depending on symptoms.

OBD II Engine Troubleshooting Procedure

Each numbered step is explained in the following text.

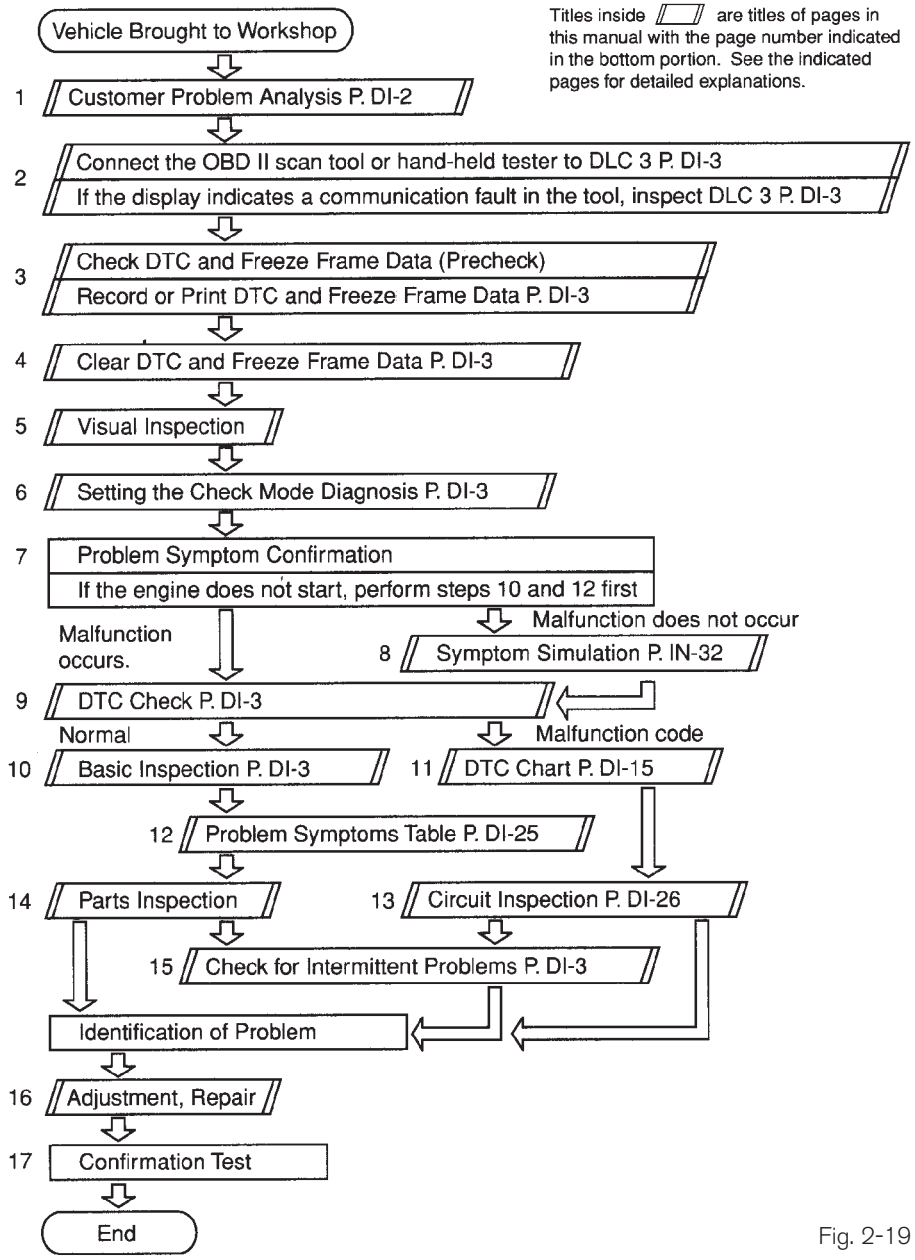

Fig. 2-19

TL874f219

Step 1: Customer Problem Analysis

Always begin with getting as much information about the conditions when the problems occur. Service managers and assistant service managers need to work with you to prevent wasted time and resources. The sophisticated systems you are working with require accurate, timely information. The Customer Problem Analysis Check Sheet needs to be familiar to all those who communicate with the customer.

Customer Problem Analysis Check

ENGINE CONTROL SYSTEM Check Sheet Inspector's Name _____

Customer's Name		Model and Model Year	
Driver's Name		Frame No.	
Date Vehicle Brought in		Engine Model	
License No.		Odometer Reading	km miles

Problem Symptoms	☐ Engine does not Start	☐ Engine does not crank ☐ No initial combustion ☐ No complete combustion
	☐ Difficult to Start	☐ Engine cranks slowly ☐ Other _____
	☐ Poor Idling	☐ Incorrect first idle ☐ Idling rpm is abnormal ☐ High (rpm) ☐ Low (rpm) ☐ Rough idling ☐ Other _____
	☐ Poor Driveability	☐ Hesitation ☐ Back fire ☐ Muffler explosion (after-fire) ☐ Surging ☐ Knocking ☐ Other _____
	☐ Engine Stall	☐ Soon after starting ☐ After accelerator pedal depressed ☐ After accelerator pedal released ☐ During A/C operation ☐ Shifting from N to D ☐ Other _____
	☐ Others	

Dates Problem Occurred		
Problem Frequency		☐ Constant ☐ Sometimes (times per day/month) ☐ Once only ☐ Other _____
Condition When Problem Occurs	Weather	☐ Fine ☐ Cloudy ☐ Rainy ☐ Snowy ☐ Various/Other _____
	Outdoor Temperature	☐ Hot ☐ Warm ☐ Cool ☐ Cold (approx. ____ °F/____ °C)
	Place	☐ Highway ☐ Suburbs ☐ Inner city ☐ Uphill ☐ Downhill ☐ Rough road ☐ Other _____
	Engine Temp.	☐ Cold ☐ Warming up ☐ After warming up ☐ Any temp. ☐ Other _____
	Engine Operation	☐ Starting ☐ Just after starting (min.) ☐ Idling ☐ Racing ☐ Driving ☐ Constant speed ☐ Acceleration ☐ Deceleration ☐ A/C switch ON/OFF ☐ Other _____

Condition of MIL		☐ Remains on	☐ Sometimes lights up ☐ Does not light up
DTC Inspection	Normal Mode (Precheck)	☐ Normal	☐ Malfunction code(s) (code) ☐ Freezed frame data ( )
	Check Mode	☐ Normal	☐ Malfunction code(s) (code) ☐ Freezed frame data ( )

Fig. 2-20

TL874f220

Step 2: Connect Diagnostic Tester

When troubleshooting OBD II vehicles, you must use an OBD II scan tool complying with SAE J1978 or Diagnostic Tester, and interpret various data output from the vehicle's ECM.

OBD II regulations require that the vehicle's on-board computer turns on the Malfunction Indicator Lamp (MIL) on the instrument panel when the computer detects a malfunction in the emission control system/ components, in the powertrain control components that affect vehicle emissions, or a malfunction in the computer. In addition to the MIL lighting when a malfunction is detected, the applicable Diagnostic Trouble Codes (DTC(s)) prescribed by SAE J2012 are recorded in the ECM memory (See section on OBD Systems Overview).

If the malfunction does not occur in three trips the MIL goes off automatically but the DTC(s) remain recorded in the ECM memory.

Step 3: Check DTC(s) and Freeze Frame Data

To check the DTC(s), connect the Diagnostic Tester to the Data Link Connector 3 (DLC3) on the vehicle. The OBD II scan tool or Diagnostic Tester also enables you to erase the DTC(s) and check Freeze Frame data and various forms of engine data (For operating instructions, see the OBD II scan tool's instruction book). DTC(s) include SAE controlled codes and manufacturer controlled codes. SAE controlled codes must be set as prescribed by the SAE, while manufacturer controlled codes can be set freely by the manufacturer within the prescribed limits (See DTC chart in the Repair Manual).

The ECM diagnostic system operates in normal mode during normal vehicle use. It also has a check mode for technicians to simulate malfunction symptoms and troubleshooting. Most DTC(s) use two trip detection logic (see below) to prevent erroneous detection and ensure thorough malfunction detection. By switching the ECM to check mode when troubleshooting, the technician can cause the MIL to light up for a malfunction that is only detected once or momentarily (using the Diagnostic Tester and certain DTCs only) (See step 2).

Two trip detection logic:

- When a malfunction is first detected, the malfunction is temporarily stored in the ECM memory (first trip).

- If the same malfunction is detected again during the second drive test, this second detection causes the MIL to light up (second trip) (However, the ignition switch must be turned OFF between the first trip and second trip).

- Freeze Frame data records the engine condition when a misfire (DTC(s) P0300 - P0308) or fuel trim malfunction (DTCs P0171, P0172, P0174 and P0175) or other malfunction (first malfunction only), is detected. The Freeze Frame data records the engine conditions (fuel system, calculated load, engine coolant temperature, fuel trim, engine speed, vehicle speed, etc.) when a malfunction is detected.

When troubleshooting, it is useful for determining whether the vehicle was running or stopped, the engine was warmed up or not, the A/F ratio was lean or rich, etc., at the time of the malfunction.

Check Service History and Service Publications

At this point, checking TSBs or other service publications may have the necessary repair information.

Checking the service history can provide clues about cause of the problem. The condition may be related to a recent repair.

NOTE Checking TSBs and service history is not specifically outlined in the Repair Manual diagnostic procedure.

Priorities for Troubleshooting

If troubleshooting priorities for multiple DTC(s) are given in the applicable DTC chart, those should be followed.

If no instructions are given, follow the order given in the beginning of the DI section. Below is a typical procedure to troubleshoot DTC(s) according to the following priorities:

(1) DTC(s) other than fuel trim malfunction (DTC(s) P0171, P0172, P0174 and P0175) and misfire (DTC(s) P0300 - P0308).

(2) Fuel trim malfunction (DTC(s) P0171, P0172, P0174 and P0175).

(3) Misfire (DTC(s) P0300 - P0308).

No Communication

If no communication, you will need to check the OBD II diagnostic circuit. An explanation of this procedure is in the section on ECM Diagnostics.

Step 4: Clear DTC and Freeze Frame Data

This procedure is used to verify if the fault is currently present. Doing this step will save you time.

INSPECT DIAGNOSIS (Normal Mode)

(a) Check the MIL.

(1) The MIL comes on when the ignition switch is turned ON and the engine is not running.

NOTE If the MIL does not light up, troubleshoot the combination meter.

(2) When the engine is started, the MIL should go off. If the lamp remains on, the diagnosis system has detected a malfunction or abnormality in the system.

(b) Check the DTC.

NOTE If there is no DTC in the normal mode, check to see if there are any DTC(s) (first trip DTC) by going to the Continuous Test Results function (Mode 7 for SAE J1979) or Pending Codes on the Diagnostic Tester. For some DTC(s) to set, the vehicle must be driven in a specified driving pattern. See Readiness Test Confirmation Strategy.

(1) Prepare the Diagnostic Tester.

(2) Connect the Diagnostic Tester to DLC3 at the lower left of the instrument panel.

(3) Turn the ignition switch ON and switch the Diagnostic Tester ON.

(4) Use the Diagnostic Tester to check the DTC(s) and Freeze Frame data. Print or write the information for future reference.

(5) See the DI section in the Repair Manual to confirm the details of the DTC(s).

NOTE When the diagnosis system (Diagnostic Tester only) is switched from the normal mode to the check mode, it erases all DTC(s) and Freeze Frame data recorded in the normal mode. So before switching modes, always check the DTC(s) and Freeze Frame data, and print or write them down.

NOTE When simulating symptoms with a generic OBD II scan tool, check the DTC(s) and use the normal mode. For codes on the DTC chart subject to "two trip detection logic", perform either of the following actions.

Turn the ignition switch OFF after the symptom is simulated the first time. Then repeat the simulation process again. When the problem has been simulated twice, the MIL lights up and the DTC(s) are recorded in the ECM.

Check the first trip DTC using Mode 7 (Continuous Test Results) or Pending Codes. See Readiness Test Confirmation Strategy.

(c) Clear the DTC.

The DTC(s) and Freeze Frame data will be erased by either action.

(1) Operate the Diagnostic Tester to erase the codes (See the Diagnostic Toolset Operator's Manual for instructions).

(2) Disconnecting the battery terminals or EFI and ETCS fuses.

NOTE If the Diagnostic Tester switches the ECM from the normal mode to the check mode or vice-versa, or if the ignition switch is turned from ON to ACC or OFF during the check mode, the DTC(s) and Freeze Frame data will be erased.

Fail-Safe Chart

For many DTCs, the ECM enters fail-safe mode. A chart in the DI section lists the action the ECM takes when a DTC is present.

Fail-Safe Chart

The Fail-Safe Chart is located in the DI section. If any of the listed DTCs are present, the ECM enters Fail-Safe mode. In most cases, this means the ECM substitutes a value so that the engine will continue to run.

DTC No.	Fail–Safe Operation	Fail–Safe Deactivation Conditions
P0100	Ignition timing fixed at 5° BTDC	Returned to normal condition
P0110	Intake air temperature is fixed at 20°C (68°F)	Returned to normal condition
P0115	Engine coolant temperature is fixed at 80°C (176°F)	Returned to normal condition
P0135 P0141 P0155 P0161	The heater circuit in which an abnormality is detected is turned off	Ignition switch OFF
P0325 P0330	Max. timing retardation	Ignition switch OFF
P1300	Fuel cut	Returned to normal condition

Fig. 2-21

TL874f221

Step 5: Visual Inspection

This is a quick check of the basics such as:

- Is there gasoline in the tank?
- All hoses and wires connected and routed correctly?
- Does the vehicle start? If not, go to steps 10 and 12 first.

NOTE Do not wiggle or shake wires at this time. You will want to see if the fault is present. Shaking wires could temporarily fix the problem.

Step 6: Check Mode

Check Mode is an operation to speed up diagnosis. Compared to Normal Mode, check Mode has an increased sensitivity to detect malfunctions. Furthermore, the same diagnostic items that are detected in Normal Mode can also be detected in Check Mode.

Check the DTC in the Repair Manual to see if Check Mode is used to verify the condition. Check Mode will not work for Evaporative System or misfire DTCs.

The MIL flashes when in Check Mode.

NOTE If the Diagnostic Tester switches the ECM from Normal Mode to Check Mode or vice-versa, or if the ignition switch is turned from ON to ACC or OFF during Check Mode, the DTC(s) and Freeze Frame data will be erased.

Step 7: Problem Symptom Confirmation

Using conditions described by the owner, check vehicle operation. Once the problem is verified, proceed to step 9 to see if any DTCs were recorded. If no symptoms were exhibited by the vehicle, proceed to step 8.

Step 8: Symptom Simulation

In this mode, as described in Section 1, an action is taken based on the description in the customer analysis sheet. For example, the condition occurs only when hot. Heating the component simulates the condition and may produce the fault.

Step 9: DTC Check

If there is a DTC, proceed to step 11.

If no DTCs are present, go to step 10.

Step 10: Basic Inspection

When the malfunction code is not confirmed in the DTC check, troubleshooting should be performed to narrow down the possibilities. In many cases, by carrying out the basic engine check shown in the Repair Manual under Basic Inspection, the location causing the problem can be found quickly and efficiently. Therefore, use of this check is essential in engine troubleshooting.

Basic Inspection Procedure

1 Is battery positive voltage 11 V or more when engine is stopped?

NO → Charge or replace battery.

YES

2 Is engine cranked?

NO → Proceed to pages ST–15 and ST–17, and continue to troubleshoot.

Go to step 7.

4 Check air filter.

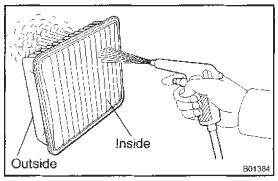

PREPARATION:
Remove the air filter.
CHECK:
Visually check that the air filter is not dirty or excessive oily.
HINT:
If necessary, clean the air filter with compressed air. First blow from inside thoroughly, then blow from outside of the air filter.

NG → Repair or replace.

OK

5 Check idle speed (See page EM–13).

NG → Proceed to problem symptoms table on page DI–21.

OK

6 Check ignition timing (See page EM–12).

NG → Proceed to page IG–1, and continue to troubleshoot.

OK

Proceed to problem symptoms table on page DI–21.

7 Check fuel pressure (See page SF–1).

NG → Proceed to page IG–1, and continue to troubleshoot.

OK

8 Check for spark (See page IG–1).

NG → Proceed to page IG–1, and continue to troubleshoot.

OK

Proceed to problem symptoms table on page DI–21.

Fig. 2-22

TL874f222

Step 11: DTC Chart

The DTC chart lists DTC codes, what is detected, possible trouble areas, and what page to turn to in order to diagnose that DTC.

Step 12: Problem Symptoms Table

Use this table to troubleshoot the problem when a "NO" code is displayed in the diagnostic trouble code check but the problem is still occurring. Numbers in the table indicate the inspection order in which the circuits or parts should be checked.

Step 13: Circuit Inspection

Go to the circuit inspection for the DTC(s) listed and follow the procedure as outlined.

NOTE

Often overlooked by technicians are the Inspection Procedure, Hints and Circuit Descriptions. These areas contain valuable information on how the circuit operates, items to check, and the order to check these items.

Here is an example from the DTC P0440 section:

Inspection Procedure

Inspection Procedure:

HINT

- If DTC P0441, P0446, P0450 or P0451 is output after DTC P0440, first troubleshoot DTC P0441,P0446, P0450 or P0451. If no malfunction is detected, troubleshoot DTC P0440, next.

- Ask the customer whether, after the MIL came on, the customer found the fuel tank cap loose and tightened it. Also, ask the customer whether the fuel tank cap was loose when refueling. If the fuel tank cap was loose, it was the cause of the DTC. If the fuel tank cap was not loose or if the customer was not sure if it was loose, troubleshoot according to the following procedure.

- Read Freeze Frame data using the Diagnostic Tester, because Freeze Frame records the engine conditions when the malfunction is detected. When troubleshooting, it is useful for determining whether the vehicle was running or stopped, the engine was warmed up or not, or the A/F ratio was lean or rich, etc. at the time of the malfunction.

- When the ENGINE RUN TIME in the Freeze Frame data is less than 200 seconds, carefully check the vapor pressure sensor.

Step 14: Parts Inspection

The parts inspection procedures for engines and engine control system components are usually found in the following sections:

- Engine Mechanical
- Fuel (Sequential Fuel Injection)
- Emission Control
- Ignition
- Engine Control System

Usually, the circuit inspection diagnosis routine will direct you to one of these sections.

The DI section has a Parts Location drawing showing the location of major engine control system components.

Step 15: Check for Intermittent Problems

Intermittent problems are often the most frustrating to solve. Aids to help you are:

- Using V-BoB
- Observing Mode 7 Continuous Tests or Pending Codes

By putting the vehicle's ECM in the check mode, one trip detection logic is possible instead of two trip detection logic; and sensitivity to detect open circuits is increased. This makes it easier to detect intermittent problems.

(1) Clear the DTC(s).
(2) Set the check mode.
(3) Perform a simulation test.
(4) Check the connector and terminal.
(5) Handle the connector.

NOTE Check mode does not work for EVAP DTCs.

Step 16: Adjustment/ Repair

At this point perform any adjustment or repairs.

Step 17: Confirmation Test

After repairing a problem involving many DTCs, the Repair Manual will outline a confirmation test procedure. It is very similar to using Check Mode. An alternative method is to use the Readiness Test Procedure using Mode 7.

Engine Operation Conditions Serial Data

In the DI section under ENGINE OPERATING CONDITION, there is a list that displays diagnostic tester abbreviations, the item measured, and what is a normal condition.

While not part of a specific routine, the listed items can provide important clues to engine operation and components and circuits operation.

If the measured item is not within the values given under normal condition, make a note but do not condemn the component or circuit. Always follow the troubleshooting procedure.

Engine Conditions - Serial Data

The values given for "Normal Condition" are representative values, so a vehicle may still be normal even if its value differs from those listed here. Do not decide whether a part is faulty according to the "Normal Condition" here.

hand-held tester display	Measurement Item	Normal Condition*
FUEL SYS #1	Fuel System Bank 1 OPEN: Air-fuel ratio feedback stopped CLOSED: Air-fuel ratio feedback operating	Idling after warming up: CLOSED
FUEL SYS #2	Fuel System Bank 2 OPEN: Air-fuel ratio feedback stopped CLOSED: Air-fuel ratio feedback operating	Idling after warming up: CLOSED
CALC LOAD	Calculator Load: Current intake air volume as a proportion of max. intake air volume	Idling: 15.6 - 22.2 % Racing without load (2,500 rpm): 16.6 - 23.9 %
COOLANT TEMP	Engine Coolant Temp. Sensor Value	After warming up: 80 - 95°C (176 - 203°F)
SHORT FT #1	Short-term Fuel Trim Bank 1	0 ± 20 %
LONG FT #1	Long-term Fuel Trim Bank 1	0 ± 20 %
SHORT FT #2	Short-term Fuel Trim Bank 2	0 ± 20 %
LONG FT #2	Long-term Fuel Trim Bank 2	0 ± 20 %
ENGINE SPD	Engine Speed	Idling: 650 - 750 rpm
VEHICLE SPD	Vehicle Speed	Vehicle stopped: 0 km/h (0 mph)
IGN ADVANCE	Ignition Advance: Ignition Timing of Cylinder No.1	Idling: BTDC 6 - 16°
INTAKE AIR	Intake Air Temp. Sensor Value	Equivalent to ambient temp.
MAF	Air Flow Rate Through Mass Air Flow Meter	Idling: 3.5 - 5.0 gm/sec. Racing without load (2,500 rpm): 12.5 - 17.9 gm/sec.
THROTTLE POS	Voltage Output of Throttle Position Sensor Calculated as a percentage: 0 V → 0 %, 5 V → 100 %	Throttle fully closed: 8 - 20 % Throttle fully open: 64 - 96 %
O2S B1 S1	Voltage Output of Oxygen Sensor Bank 1 Sensor 1	Idling: 0 - 1.0 V
O2S B1 S2	Voltage Output of Oxygen Sensor Bank 1 Sensor 2	Driving (50 km/h, 31 mph): 0 - 1.0 V
O2S B2 S1	Voltage Output of Oxygen Sensor Bank 2 Sensor 1	Idling: 0 - 1.0 V
O2S B2 S2	Voltage Output of Oxygen Sensor Bank 2 Sensor 2	Driving (50 km/h, 31 mph): 0 - 1.0 V
O2FT B1 S1	Oxygen Sensor Fuel Trim Bank 1 Sensor 1 (Same as SHORT FT #1)	0 ± 20 %
O2FT B2 S1	Oxygen Sensor Fuel Trim Bank 2 Sensor 1 (Same as SHORT FT #2)	0 ± 20 %

Fig. 2-23

TL874f223

Limitations of the Self-Diagnostic System

As advanced as the OBD and OBD II self diagnostic systems are, there are still certain limitations you must keep in mind when troubleshooting engine control system faults:

Not all engine control system circuits are monitored. Therefore, not all problems will activate the Malfunction Indicator Lamp (MIL) or store a DTC in ECM memory.

A DTC only indicates that a problem exists somewhere in the sensor/actuator circuit. You must determine where the fault exists. For example; a sensor, related wiring, or ECM. Some intermittent problems can go undetected because the diagnostic programming is unable to detect the fault. In these cases, it is best to use the problem symptoms, Basic Inspection, and get live measurements by using a DVOM or V-BoB.

Even though the engine control system passes the Diagnostic Circuit Inspection, it does not always indicate a problem free system.

Readiness Test Confirmation Strategy

This procedure uses the modes under CARB to detect problems with monitored systems. This procedure will guide you on how to use and interpret Readiness Confirmation Test status for diagnosis.

The Repair Manual often provides a confirmation driving pattern to test the vehicle, for certain types of repairs (O2 sensor, A/F sensor, EGR system, catalytic converter). The Repair Manual may direct you to use Check Mode. Check Mode is NOT to be used. This procedure is a general procedure designed for all Non-Continuous monitors.

The following must be observed for the EVAP monitor to run and it must be within the following parameters:

- Vehicle must be cold, ambient temperature approximately between 10°C - 35°C (50°F - 95°F). (This is done for earlier completion.)
- Fuel level between 1/4 to 3/4 (this is done for earlier completion).
- Intake Air Temperature (IAT) and Engine Coolant Temperature (ECT) sensors within 6.5°C (12°F) of each other.

TID CID Screen and TIME$0 Screen

Two different screens showing Pass and Fail. Some vehicles will show TID in place of Time. To see the test results of the O2 sensor monitor, go to Mode 5 O2S Test Results.

- (TID)Time$01 = Catalyst Deterioration
- (TID)Time$02 = Evaporative System Deterioration
- (TID)Time$03 = Not Supported
- (TID)Time$04 = O2 Sensor Heater
- (TID)Time$05 = EGR
- (TID)Time$06 = A/F Sensor
- (TID)Time$07 = A/F Sensor Heater
- (TID)Time$08 = Thermostat Monitor

```
NON-CONTINUOUS TESTS

Time$01 CID$01........ Pass
Time$02 CID$01........ Pass
Time$02 CID$02........ Pass
Time$02 CID$03........ Pass
Time$02 CID$04........ Pass
Time$04 CID$00........ Pass
Time$04 CID$02........ Pass
Time$05 CID$01........ Pass
Time$06 CID$01........ Pass
Time$07 CID$01........ Pass
```

```
NON-CONTINUOUS TESTS

Time$01 CID$01........ Pass
Time$02 CID$01........ Fail
Time$02 CID$02........ Fail
Time$02 CID$03........ Fail
Time$02 CID$04........ Fail
Time$04 CID$00........ Pass
Time$04 CID$02........ Pass
Time$05 CID$01........ Pass
Time$06 CID$01........ Pass
Time$07 CID$01........ Pass
```

Fig. 2-24
TL874f215

First Trip Procedure

Clear DTCs. Under CARB OBD II, Readiness Tests will show INCMPL. Turn ignition key off, wait 5 seconds, then start the engine.

NOTE **The READINESS TEST screen and MONITOR STATUS screen contain identical information. You can use either screen to confirm monitor operation.**

First Trip Procedure - DTCs Cleared

All Non-Continuous Readiness Tests evaluations show INCMPL (incomplete) when DTCs are cleared. Monitor Status will show the same monitors.

```
READINESS TEST

MISFIRE MON.......... AVAIL
FUEL SYS MON......... AVAIL
COMP MON............. AVAIL
CAT EVAL............ INCMPL
HTD CAT EVAL........... N/A
EVAP EVAL........... INCMPL
2nd AIR EVAL........... N/A
A/C EVAL............... N/A
O2S EVAL............ INCMPL
O2S HTR EVAL........ INCMPL
EGR EVAL............ INCMPL
```

Fig. 2-25

TL874f225

Drive the vehicle in the following manner: Allow the engine to warm up. Moderately accelerate from 0 mph to 40 mph, hold at 40 mph for at least 30 seconds, then decelerate to idle with an idle time of approximately 30 seconds. Repeat this pattern at least three times. Next, drive the vehicle at a relatively constant speed between 40 mph to 65 mph. Avoid rough terrain and sharp turns. Note the state of Readiness Tests. They will change to **COMPL** as the evaluation monitors operate and if the system passes. This procedure may take approximately 20 minutes or more. **Do not shut off the engine – the results will be invalid.**

The following will explain the possible results of this test. The Diagnostic Tester will display either COMPL (complete) or INCMPL (incomplete). Read the following two conditions, **Pass Condition** or **Fail Condition** to determine the state of the monitor.

Pass Condition - No Problem Found by the ECM

If the evaluation monitor(s) shows **COMPL**, go to the NON-CONTINUOUS TESTS screen. To get there, go to ADVANCED OBD II, ON-BOARD TESTS, NON-CONTINUOUS TESTS. For the O2 sensor monitor, go to O2S TEST RESULTS.

NOTE Do not turn the engine off – the results will be invalid.

If the Time$0x tests show **Pass**, the evaluation monitor(s) **has operated and no problem was detected**.

Pass Condition

```
READINESS TEST

MISFIRE MON........... AVAIL
FUEL SYS MON......... AVAIL
COMP MON............. AVAIL
CAT EVAL............. COMPL
HTD CAT EVAL........... N/A
EVAP EVAL............ COMPL
2nd AIR EVAL........... N/A
A/C EVAL............... N/A
O2S EVAL............. COMPL
O2S HTR EVAL......... COMPL
EGR EVAL............. COMPL
```

```
NON-CONTINUOUS TESTS

Time$01 CID$01........ Pass
Time$02 CID$01........ Pass
Time$02 CID$02........ Pass
Time$02 CID$03........ Pass
Time$02 CID$04........ Pass
Time$04 CID$00........ Pass
Time$04 CID$02........ Pass
Time$05 CID$01........ Pass
Time$06 CID$01........ Pass
Time$07 CID$01........ Pass
```

Fig. 2-26
TL874f226

No Determination Condition

If a Readiness Test shows **INCMPL**, go to NON-CONTINUOUS TESTS screen. For the O2 sensor monitor, go to O2S TEST RESULTS.

1.If the tests show **Pass**, the following may have occurred:

- the evaluation monitor did not operate
- the evaluation monitor did not finish
- the ECM withheld judgement

No Determination Condition

From the data on these two screens, the ECM has not determined if the EVAP system is good or if there is a problem. Further driving may be needd.

```
READINESS TEST

MISFIRE MON........... AVAIL
FUEL SYS MON......... AVAIL
COMP MON............. AVAIL
CAT EVAL............. COMPL
HTD CAT EVAL........... N/A
EVAP EVAL........... INCMPL
2nd AIR EVAL........... N/A
A/C EVAL............... N/A
O2S EVAL............. COMPL
O2S HTR EVAL......... COMPL
EGR EVAL............. COMPL
```

```
NON-CONTINUOUS TESTS

Time$01 CID$01........ Pass
Time$02 CID$01........ Pass
Time$02 CID$02........ Pass
Time$02 CID$03........ Pass
Time$02 CID$04........ Pass
Time$04 CID$00........ Pass
Time$04 CID$02........ Pass
Time$05 CID$01........ Pass
Time$06 CID$01........ Pass
Time$07 CID$01........ Pass
```

Fig. 2-27

TL874f227

NOTE When a Readiness Test monitor shows INCMPL and Pass, it is unknown if the system monitor is good or if it has a problem. Further testing and/or driving is recommended to confirm system monitor operation.

Fail Condition - Problem Detected by the ECM

1. If one or more of the tests in the Time$0x... category show **Fail**, the evaluation monitor(s) did operate and the ECM detected a problem.

TID Screen

- (TID)Time$01 = Catalyst Deterioration
- (TID)Time$02 = Evaporative System Deterioration
- (TID)Time$03 = Not Supported
- (TID)Time$04 = O2 Sensor Heater
- (TID)Time$05 = EGR
- (TID)Time$06 = A/F Sensor
- (TID)Time$07 = A/F Sensor Heater
- (TID)Time$08 = Thermostat Monitor

Fig. 2-28

Fail Condition

Here, the ECM has detected a problem in the EVAP system. Since this happened on the first trip, the DTC(s) can be found in Continuous Tests (Mode 7) or Pending Codes. These are pending DTC(s).

```
READINESS TEST

MISFIRE MON........... AVAIL
FUEL SYS MON......... AVAIL
COMP MON............. AVAIL
CAT EVAL............. COMPL
HTD CAT EVAL........... N/A
EVAP EVAL........... INCMPL
2nd AIR EVAL........... N/A
A/C EVAL............... N/A
O2S EVAL............. COMPL
O2S HTR EVAL......... COMPL
EGR EVAL............. COMPL
```

```
NON-CONTINUOUS TESTS

Time$01 CID$01........ Pass
Time$02 CID$01........ Fail
Time$02 CID$02........ Fail
Time$02 CID$03........ Fail
Time$02 CID$04........ Fail
Time$04 CID$00........ Pass
Time$04 CID$02........ Pass
Time$05 CID$01........ Pass
Time$06 CID$01........ Pass
Time$07 CID$01........ Pass
```

Fig. 2-29

TL874f229

Go to CONTINUOUS TESTS (Mode 7) screen or PENDING CODES screen.

NOTE The DTC listed may not be valid. A second trip is needed to confirm the DTC.

Pending DTCs

The Continuous Tests or Pending Codes showed the DTCs. These DTCs do not show up anywhere else. These DTCs may not be valid, but indicates a possible problem. A second trip is needed to confirm.

```
CONTINUOUS TESTS
ECU: $10 (Engine)
Number of Tests: 3

P0440
EVAP Control System
Malfunction

P0441
EVAP Control System
Incorrect Purge Flow

P0446
EVAP Control System Vent
Control Circuit Malfunction
```

```
PENDING CODES
ECU: ENGINE
Number of DTCs: 3

P0440
EVAP Control System
Malfunction

P0441
EVAP Control System
Incorrect Purge Flow

P0446
EVAP Control System Vent
Control Circuit Malfunction
```

Fig. 2-30

TL874f230

Second Trip Procedure

1. Vehicle must be cold, ambient temperature approximately between 10°C - 35°C (50°F - 95°F).
2. Fuel level between 1/4 to 3/4.
3. Intake Air Temperature (IAT) and Engine Coolant Temperature (ECT) sensors within 6.5°C (12°F) of each other.
4. **DO NOT CLEAR CODES!**
5. Go to Readiness Test screen.
6. Drive the vehicle according to the same pattern as outlined earlier. Note the state of evaluation monitor(s). This procedure may take approximately 20 minutes or more. **Do not shut off the engine – the results will be invalid.**

If a Readiness Test changes to **COMPL**, the evaluation monitor has operated. Check for any stored DTCs.

- If a DTC has stored, the problem has been detected and confirmed by the ECM.
- If no DTC was found, the monitor operated but no problem was detected.

There are situations where the Readiness Test may stay **INCMPL**, but the MIL will illuminate on the second trip (if two trip DTC). In this case, a fault has been detected and you should troubleshoot the displayed DTC(s).

Second Trip Procedure

```
READINESS TEST

MISFIRE MON........... AVAIL
FUEL SYS MON......... AVAIL
COMP MON............. AVAIL
CAT EVAL............. COMPL
HTD CAT EVAL........... N/A
EVAP EVAL........... INCMPL
2nd AIR EVAL........... N/A
A/C EVAL............... N/A
O2S EVAL............. COMPL
O2S HTR EVAL......... COMPL
EGR EVAL............. COMPL
```

```
P0440
EVAP Control System
Malfunction

P0441
EVAP Control System
Incorrect Purge Flow

P0446
EVAP Control System Vent
Control Circuit Malfunction
```

Fig. 2-31
TL874f231

Summary of Readiness Test Results

NO problem detected if the monitor shows COMPL on the first trip, and if Non-Continuous test screen shows Pass.

```
READINESS TEST

MISFIRE MON.......... AVAIL
FUEL SYS MON......... AVAIL
COMP MON............. AVAIL
CAT EVAL............. COMPL
HTD CAT EVAL........... N/A
EVAP EVAL............ COMPL
2nd AIR EVAL........... N/A
A/C EVAL............... N/A
O2S EVAL............. COMPL
O2S HTR EVAL......... COMPL
EGR EVAL............. COMPL
```

⇨

```
NON-CONTINUOUS TESTS

Time$01 CID$01........ Pass
Time$02 CID$01........ Pass
Time$02 CID$02........ Pass
Time$02 CID$03........ Pass
Time$02 CID$04........ Pass
Time$04 CID$00........ Pass
Time$04 CID$02........ Pass
Time$05 CID$01........ Pass
Time$06 CID$01........ Pass
Time$07 CID$01........ Pass
```

The monitor did not operate/did not complete/withheld judgement -If monitor shows INCMPL on the first trip, and Non-Continuous Tests shows Pass.

```
READINESS TEST

MISFIRE MON.......... AVAIL
FUEL SYS MON......... AVAIL
COMP MON............. AVAIL
CAT EVAL............. COMPL
HTD CAT EVAL........... N/A
EVAP EVAL........... INCMPL
2nd AIR EVAL........... N/A
A/C EVAL............... N/A
O2S EVAL............. COMPL
O2S HTR EVAL......... COMPL
EGR EVAL............. COMPL
```

⇨

```
NON-CONTINUOUS TESTS

Time$01 CID$01........ Pass
Time$02 CID$01........ Pass
Time$02 CID$02........ Pass
Time$02 CID$03........ Pass
Time$02 CID$04........ Pass
Time$04 CID$00........ Pass
Time$04 CID$02........ Pass
Time$05 CID$01........ Pass
Time$06 CID$01........ Pass
Time$07 CID$01........ Pass
```

Problem detected if the monitor operated and a fault was detected if the monitor shows INCMPL on the first trip, and Non-Continuous shows Fail. Go to Continuous Tests or Pending Codes for DTC(s).

```
READINESS TEST

MISFIRE MON.......... AVAIL
FUEL SYS MON......... AVAIL
COMP MON............. AVAIL
CAT EVAL............. COMPL
HTD CAT EVAL........... N/A
EVAP EVAL........... INCMPL
2nd AIR EVAL........... N/A
A/C EVAL............... N/A
O2S EVAL............. COMPL
O2S HTR EVAL......... COMPL
EGR EVAL............. COMPL
```

⇨

```
NON-CONTINUOUS TESTS

Time$01 CID$01........ Pass
Time$02 CID$01........ Fail
Time$02 CID$02........ Fail
Time$02 CID$03........ Fail
Time$02 CID$04........ Fail
Time$04 CID$00........ Pass
Time$04 CID$02........ Pass
Time$05 CID$01........ Pass
Time$06 CID$01........ Pass
Time$07 CID$01........ Pass
```

⇩

```
CONTINUOUS TESTS
ECU: $10 (Engine)
Number of Tests: 3

P0440
EVAP Control System
Malfunction

P0441
EVAP Control System
Incorrect Purge Flow

P0446
EVAP Control System Vent
Control Circuit Malfunction
```

Fig. 2-32

TL874I232

Check Mode Procedure

(1) Initial conditions:

- Battery positive voltage 11V or more
- Throttle valve fully closed
- Transmission in P or N position
- A/C switched OFF

(2) Turn the ignition switch OFF.

(3) Prepare the Diagnostic Tester.

(4) Connect the Diagnostic Tester to the DLC3.

(5) Turn the ignition switch ON and push the Diagnostic Tester switch ON.

(6) Switch the Diagnostic Tester from the normal mode to the check mode (Check that the MIL flashes.)

NOTE If the Diagnostic Tester switches the ECM from the normal mode to the check mode or vice-versa, or if the ignition switch is turned from ON to ACC or OFF during the check mode, the DTC(s) and Freeze Frame data will be erased.

(7) Start the engine (The MIL goes out after engine start.)

(8) Simulate the conditions of the malfunction described by the customer.

NOTE Leave the ignition switch ON until you have checked the DTC(s), etc.

(9) After simulating the malfunction conditions, use the Diagnostic Tester diagnosis selector to check the DTC(s) and Freeze Frame data, etc.

NOTE Take care not to turn the ignition switch OFF. Turning the ignition switch OFF switches the diagnosis system from check mode to normal mode, so all DTC(s), etc., are erased.

(10) After checking the DTC, inspect the applicable circuit.

Notes

WORKSHEET 2-1
Diagnostic Tester Modes

Vehicle	Year/Prod. Date	Engine	Transmission

Worksheet Objectives

For troubleshooting OBD II concerns with the Diagnostic Tester, there are two major areas with information, Enhanced OBD II and CARB OBD II. In this worksheet, you will use the Diagnostic Tester to obtain relevant information, and observe the advantages different screens posses to the diagnosis of OBD II related concerns.

Tools and Equipment

- Vehicle Repair Manual
- Vehicle EWD
- Diagnostic Tester
- Hand Tool Set

Section 1: Features of Enhanced OBD II and CARB OBD II

1. On the list below, note if the listed item is located in the ENHANCED OBD II or CARB OBD II section. Write a very brief comment on the use/advantage of the following modes (if any).

SCREEN TITLE	ENHANCED OBD II	CARB OBD II
DATA LIST		
NORMAL MODE		
CHECK MODE		
REPAIR CONFIRMATION		
DTCs		

SCREEN TITLE	ENHANCED OBD II	CARB OBD II
SNAP SHOT		
FREEZE DATA		
CLEAR DIAG INFO		
O2S TEST RESULTS		
O2S/RPM CHECK		
READINESS TESTS		
ACTIVE TESTS		
ADVANCED OBD II FUNCTIONS		
NON-CONTINUOUS		
CONTINUOUS		
UNIT CONVERSION		
PENDING CODES		

Diagnostic Tester Modes

Name: _____ Date: _____

Review this sheet as you are doing the worksheet. Check each category after completing the worksheet and instructor presentation. Ask the instructor if you have questions. The comments section is for you to write where to find the information, questions, etc.

Topic	*I have questions*	*I know I can*	Comment
Locate Enhanced and CARB OBD II functions on the Diagnostic Tester			

Notes

WORKSHEET 2-2
Readiness Non-Continuous Test Modes

Vehicle	Year/Prod. Date	Engine	Transmission

Worksheet Objectives

To accurately diagnose the condition of the vehicle based on Readiness Tests and Non-Continuous Test modes.

CASE 1

DTCs were cleared and the vehicle was driven with the DT connected. Based on the following screen shots, determine the status of the Readiness Tests (monitors) and determine if there is a problem

```
READINESS TEST

MISFIRE MON.......... AVAIL
FUEL SYS MON......... AVAIL
COMP MON............. AVAIL
CAT EVAL............. COMPL
HTD CAT EVAL........... N/A
EVAP EVAL............ COMPL
2nd AIR EVAL........... N/A
A/C EVAL............... N/A
O2S EVAL............. COMPL
O2S HTR EVAL......... COMPL
EGR EVAL............. COMPL
```

```
NON-CONTINUOUS TESTS

Time$01 CID$01........ Pass
Time$02 CID$01........ Pass
Time$02 CID$02........ Pass
Time$02 CID$03........ Pass
Time$02 CID$04........ Pass
Time$04 CID$00........ Pass
Time$04 CID$02........ Pass
Time$05 CID$01........ Pass
Time$06 CID$01........ Pass
Time$07 CID$01........ Pass
```

READINESS TEST MON	Operate?	Status?
MISFIRE MON		
FUEL SYS MON		
COMP MON		
CAT EVAL		
EVAP EVAL		
O2S EVAL		
O2S HTR EVAL		
EGR EVAL		

Notes:

CASE 2

DTCs were cleared and the vehicle was driven with the DT connected. Based on the following screen shots, determine the status of the Readiness Tests monitors and determine if there is a problem.

```
READINESS TEST

MISFIRE MON.......... AVAIL
FUEL SYS MON......... AVAIL
COMP MON............. AVAIL
CAT EVAL............ INCMPL
HTD CAT EVAL........... N/A
EVAP EVAL........... INCMPL
2nd AIR EVAL........... N/A
A/C EVAL............... N/A
O2S EVAL............. COMPL
O2S HTR EVAL......... COMPL
EGR EVAL............... N/A
```

```
NON-CONTINUOUS TESTS

Time$01 CID$01........ Pass
Time$02 CID$01........ Pass
Time$02 CID$02........ Pass
Time$02 CID$03........ Pass
Time$02 CID$04........ Pass
Time$04 CID$00........ Pass
Time$04 CID$02........ Pass
Time$05 CID$01........ Pass
Time$06 CID$01........ Pass
Time$07 CID$01........ Pass
```

READINESS TEST MON	Operate?	Status?
MISFIRE MON		
FUEL SYS MON		
COMP MON		
CAT EVAL		
EVAP EVAL		
O2S EVAL		
O2S HTR EVAL		
EGR EVAL		

Notes:

CASE 3

DTCs were cleared and the vehicle was driven with the DT connected. Based on the following screen shots, determine the status of the Readiness Tests monitors and determine if there is a problem.

```
READINESS TEST

MISFIRE MON........... AVAIL
FUEL SYS MON......... AVAIL
COMP MON............. AVAIL
CAT EVAL............. COMPL
HTD CAT EVAL........... N/A
EVAP EVAL........... INCMPL
2nd AIR EVAL........... N/A
A/C EVAL............... N/A
O2S EVAL............. COMPL
O2S HTR EVAL......... COMPL
EGR EVAL............... N/A
```

```
NON-CONTINUOUS TESTS

Time$01 CID$01........ Pass
Time$02 CID$01........ Pass
Time$02 CID$02........ Fail
Time$02 CID$03........ Pass
Time$02 CID$04........ Pass
Time$04 CID$00........ Pass
Time$04 CID$02........ Pass
Time$05 CID$01........ Pass
Time$06 CID$01........ Pass
Time$07 CID$01........ Pass
```

READINESS TEST MON	Operate?	Status?
MISFIRE MON		
FUEL SYS MON		
COMP MON		
CAT EVAL		
EVAP EVAL		
O2S EVAL		
O2S HTR EVAL		
EGR EVAL		

Notes:

Notes

Section 3

Comprehensive Component Monitor Diagnosis

Overview

The comprehensive component monitor is used to monitor individual component operation. In many ways this is similar to the OBD systems. The comprehensive component monitor, like OBD, monitors for opens or shorts in the component or its circuit, however it also has the ability to determine the performance of a component/circuit. The ECM does this by determining if the signal is rational. For example, a MAF voltage signal of 3.0 volts with the throttle closed is not rational.

If it affects vehicle emissions, but is not part of the other monitored systems, it is a comprehensive component.

Many comprehensive components have two types of DTCs. An open, a short, or no response is a one trip DTC. A performance problem is usually a two trip DTC.

NOTE

The best source of this code setting parameter information is the Repair Manual specific to that vehicle. Some parameters may not be outlined but should be assumed, i.e. engine at operating temperature. Carefully study the information given to determine what must occur before DTC will be recorded. Remember the DTC may be the result of an out-of-spec system monitor, not a component that has failed.

ECM Detection Range Example

This graph displays the detection range for the ECT sensor. OBD II tests for these conditions and for ECT sensor performance.

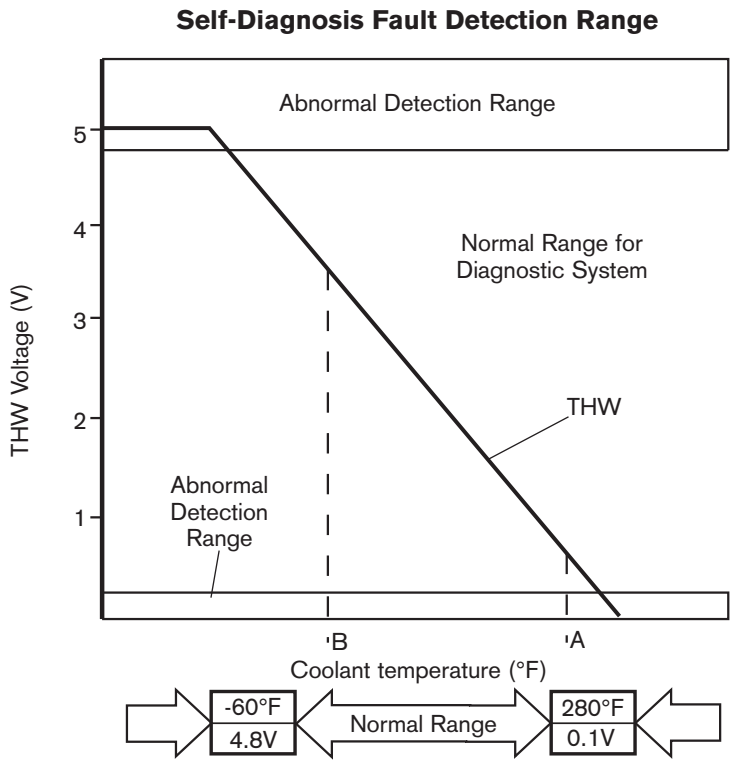

Fig. 3-1

TL874f301

MAF Sensor Circuit

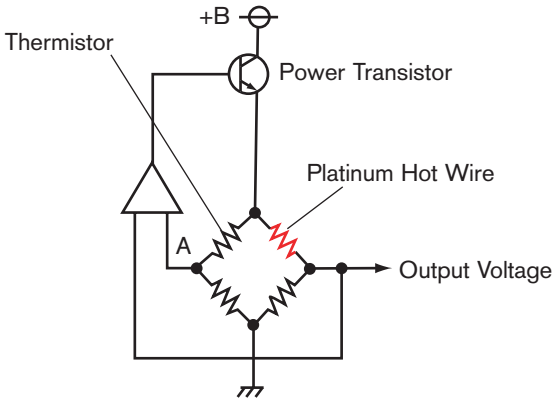

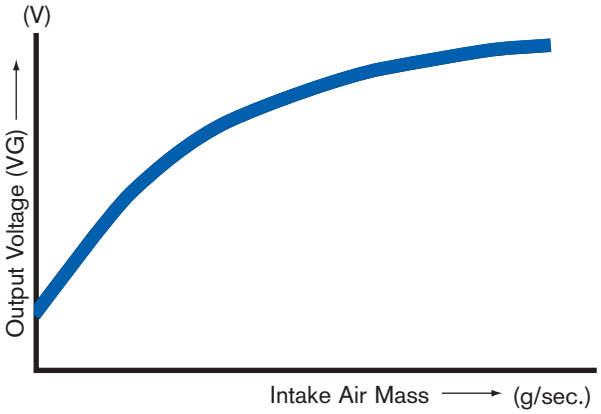

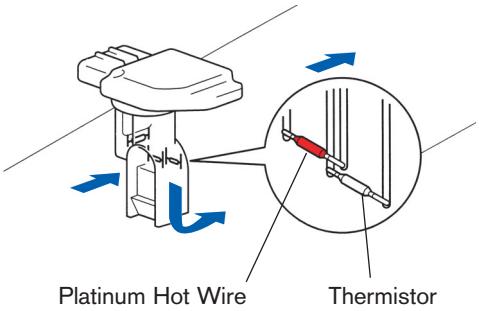

Fig. 3-2

TL874f302

Mass Air Flow (MAF) Sensor Circuit

There are two DTCs directly applicable to the MAF circuit. DTC P0100 is set when an open or short occurs in the MAF circuit. It is a one trip DTC and has Fail-Safe strategy. The Fail-Safe Strategy fixes the ignition timing and the on time of the fuel injectors according to engine conditions.

DTC P0101 has three different conditions to detect MAF sensor/circuit failure. ECM is comparing the MAF signal against the expected MAF signal when compared to throttle position and engine speed.

***P0100** Mass Air Flow Sensor Circuit*

ENABLING STRATEGY	DETECTING CONDITION	TRIP(S)	ECM STRATEGY
Time > 3 sec. Engine Speed ≥ 4000 rpm	0.0 gm.sec or 271 gm/sec	1	Fail-Safe Mode Ignition timing fixed Injection on time fixed

***P0101** Mass Air Flow Circuit Range/Performance*

ENABLING STRATEGY	DETECTING CONDITION	TRIP(S)	ECM STRATEGY
Engine warmed up Throttle Valve fully closed Engine Speed ≥ 1000 rpm Time ≥ 10 sec.	MAF output > 2.2V	2	
Engine Speed ≥ 2000 rpm Time ≥ 6 sec. VTA ≥ 0.64V	MAF output < 1.0V	2	

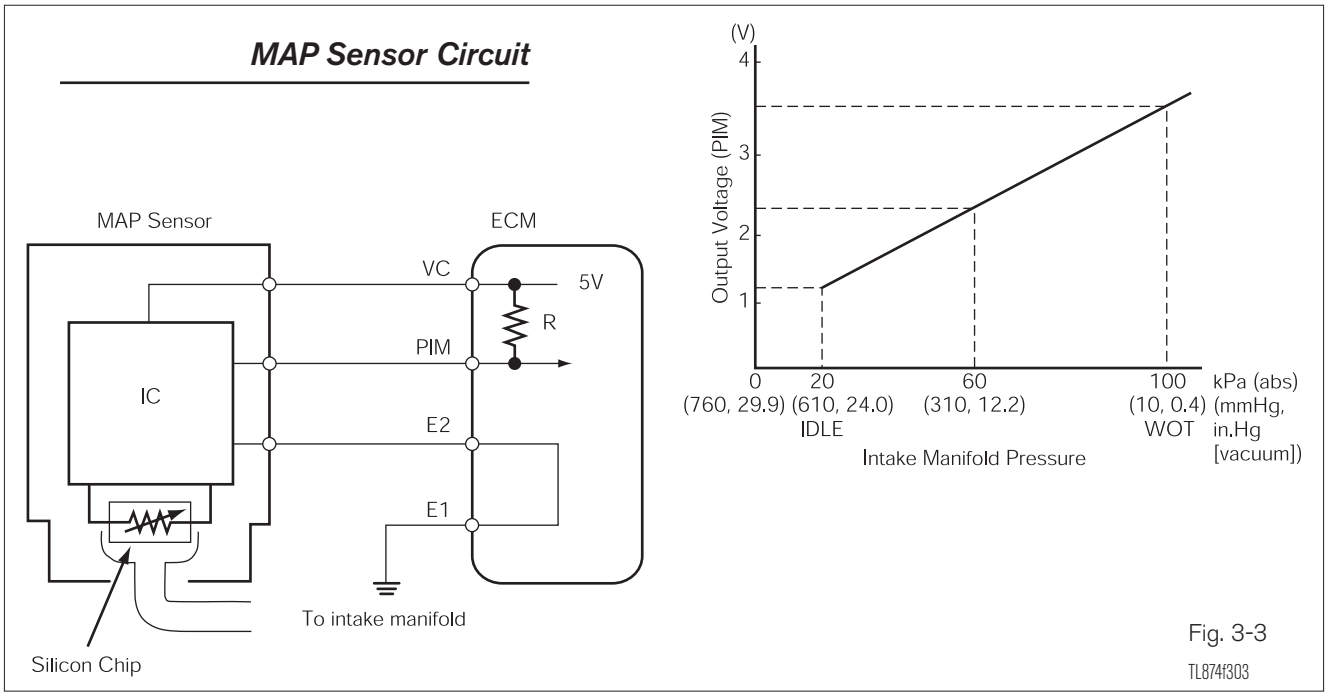

Fig. 3-3

Manifold Absolute Pressure (MAP) Sensor Circuit

The ECM will set DTC P0105 when there is an open or short in the circuit. There is a Fail-Safe strategy when this condition is detected. DTC P0106 is a performance condition based on logic. ECM is comparing the MAP signal against the expected MAP signal when compared to throttle position and engine speed.

NOTE Though Lexus engines do not use a MAP sensor, the following information about MAP sensors is provided for reference.

***P0105** Manifold Absolute Pressure/Barometric Pressure Circuit Malfunction*

ENABLING STRATEGY	DETECTING CONDITION	TRIP(S)	ECM STRATEGY
Key ON	MAP 0kPa or > 130kPa	1	Fail-Safe Mode Ignition timing fixed (5° BTDC)

***P0106** Manifold Absolute Pressure Circuit Range/Performance Problem*

ENABLING STRATEGY	DETECTING CONDITION	TRIP(S)	ECM STRATEGY
Engine warmed up Throttle Valve fully closed Engine speed 400-1000 rpm Time ≥ 10 sec.	MAP output > 3.0V	2	
Engine Speed 2500 rpm Time ≥ 5 sec. VTA ≥ 1.85V	MAP output < 1.0V	2	

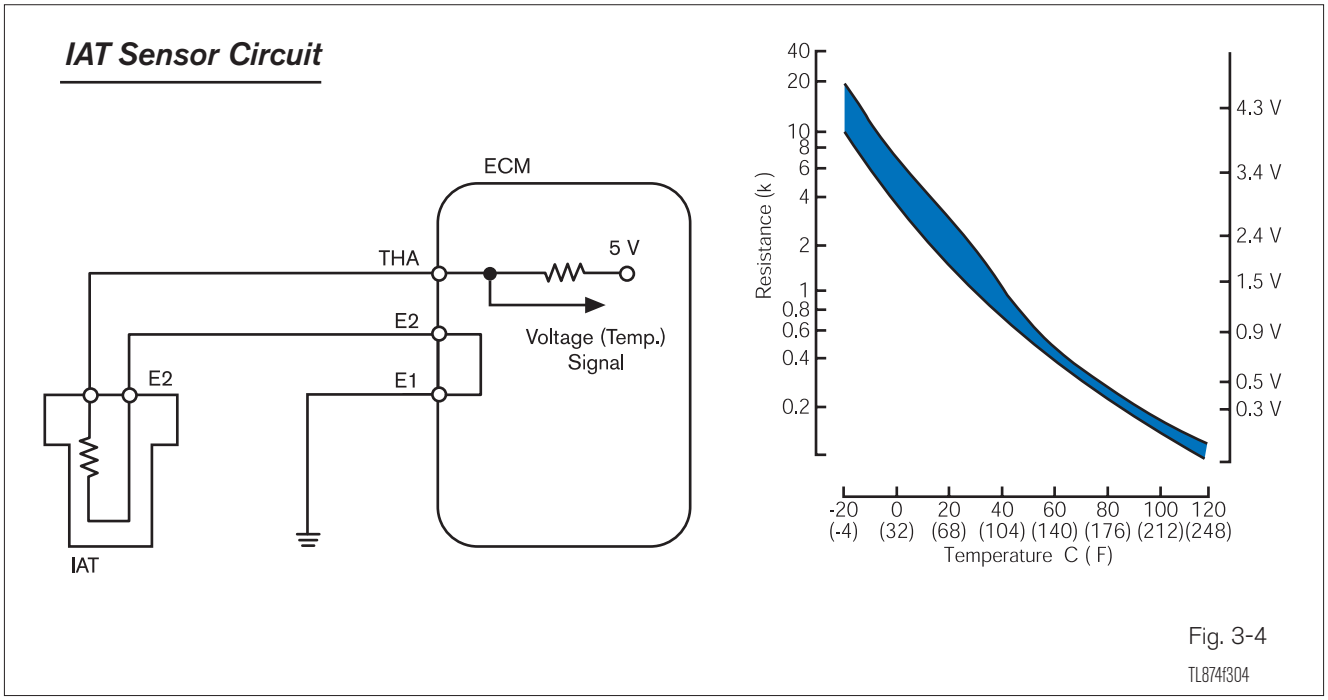

Intake Air Temperature (IAT) Sensor Circuit

The ECM detects an open or short in the IAT circuit. This is a one trip DTC with a Fail-Safe function.

***P0110** Intake Air Temperature Sensor Circuit*

ENABLING STRATEGY	DETECTING CONDITION	TRIP(S)	ECM STRATEGY
Key ON	Temperature -40°C (40°F) or ≥ 140°C (284°F)	1	Fail-Safe Mode ECT is fixed @ 20°C (68°F)

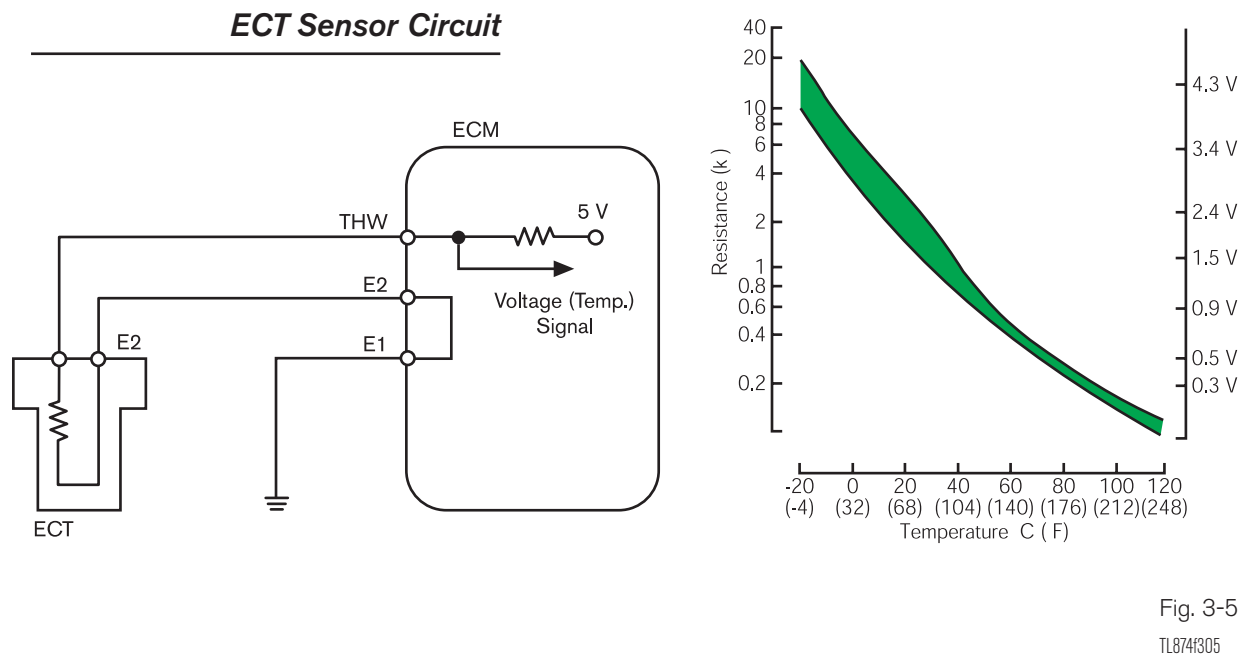

Fig. 3-5

TL874f305

Engine Coolant Temperature (ECT) Sensor Circuit

There are two DTCs that can set for the ECT sensor circuit. The first DTC P0115 is for an open or short in the circuit. Note that this is a one trip DTC and that the ECM strategy is to go to Fail-Safe Mode and substitute a value.

***P0110** Engine Coolant Temperature Sensor Circuit*

ENABLING STRATEGY	DETECTING CONDITION	TRIP(S)	ECM STRATEGY
Key ON	Temperature -40°C (40°F) or ≥ 140°C (284°F)	1	Fail-Safe Mode ECT is fixed @ 80°C (176°F)

The second DTC is set when the ECT sensor does not change its signal according to the ECM logic. The ECM has been programmed to measure how quickly the ECT sensor changes as the engine warms up. This is a two trip DTC. Note the different temperature ranges the ECM uses to see if the ECT circuit is functioning correctly.

***P0116** Engine Coolant Temperature Circuit Range/Performance Problem*

ENABLING STRATEGY	DETECTING CONDITION	TRIP(S)	ECM STRATEGY
If THW < -7°C (19.4°F) or THA < -7°C (19.4°F) @ Engine Start Time ≥ 20 min.	ECT Sensor is: ≤ 30°C (86°F) Non CA ≤ 20°C (68°F) CA	2	
If THW ≥ -7°C (19.4°F) and < 10°C (50°F) @ Engine Start Time ≥ 5 min. OR THA ≥ 10°C (50°F)@ Engine Start Time ≥ 2 min.	ECT Sensor is: ≤ 30°C (86°F) Non CA ≤ 20°C (68°F) CA	2	
When THW ≥ 35°C (95°F) and 60°C (140°F), THA ≥ -7°C (19.4°F) @ Engine Start	Vehicle speed not stable ECT temp change lower 3°C (37.4°F) than when engine started	2	

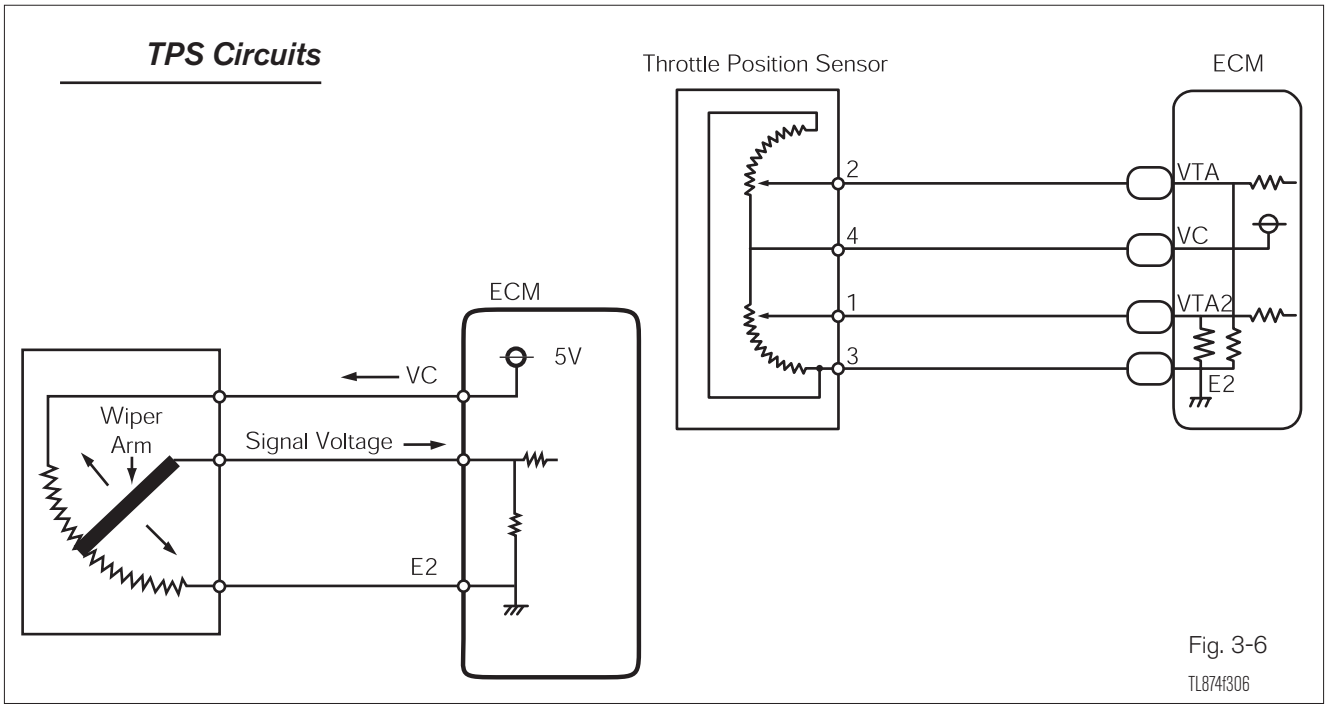

Fig. 3-6

Throttle Position Sensor (TPS) Circuit

DTC P0120 is a one trip DTC that sets when the TPS circuit shows either open circuit voltage or closed circuit voltage.

For DTC P0121, the ECM looks at the VTA voltage from the TPS as the vehicle decelerates from 19 mph to 0 mph. The ECM compares the VTA voltage to its preprogrammed specifications to determine if the TPS is out of range. This is a one trip DTC.

***P0120** Throttle/Pedal Position Sensor/Switch "A" Circuit Malfunction*

ENABLING STRATEGY	DETECTING CONDITION	TRIP(S)	ECM STRATEGY
Key ON Time ≤ 5 sec.	VTA < 0.1V or VTA > 4.9V	1	Fail-Safe Mode VTA is fixed at 0 degrees

NOTE Throttle valve either fully closed (approx. 0%) or fully opened (approx. 100%)

***P0121** Throttle/Pedal Position Sensor/Switch "A" Circuit Range/Performance Problem*

ENABLING STRATEGY	DETECTING CONDITION	TRIP(S)	ECM STRATEGY
Vehicle speed has exceeded 19 mph (30 (km/h). Vehicle speed drops from 19 mph (30 km/h) or more to 0 mph (0 km/h), output value of the TPS is out of applicable range	VTA voltage out of range VTA < 0.7V or ≥ 5.2V	1	

NOTE These DTCs are covered in detail with the approproate system monitor.

P0125 *Insufficient Coolant Temp. for Closed Loop Fuel Control*

P0130/P0150 *Heated O2 Sensor Circuit Malfunction (B1,S1/B2,S1)*

P0133/P0153 *Heated O2 Sensor Circuit Slow Response (B1,S2/B2,S2)*

P0135/P0141/P0155/P0161 *Heated O2 Sensor Heater Malfunction (B1,S1/B1,S2/B2,S1/B2/S2)*

P0136/P0156 *Heated O2 Sensor Circuit Malfunction (B1,S2/B2,S2)*
See O2 and A/F Sensor Diagnostics section

P0171, P0174 *System Too Lean (Fuel Trim)*
See Fuel System Diagnostics section

P0172, P0175 *System Too Rich (Fuel Trim)*
See Fuel System Diagnostic section

P0300/P0301/P0302/P0303/P0304/P0305/P0306/P0307/P0308 *Cylinders Misfire Detected*
See Engine Misfire Diagnostic section

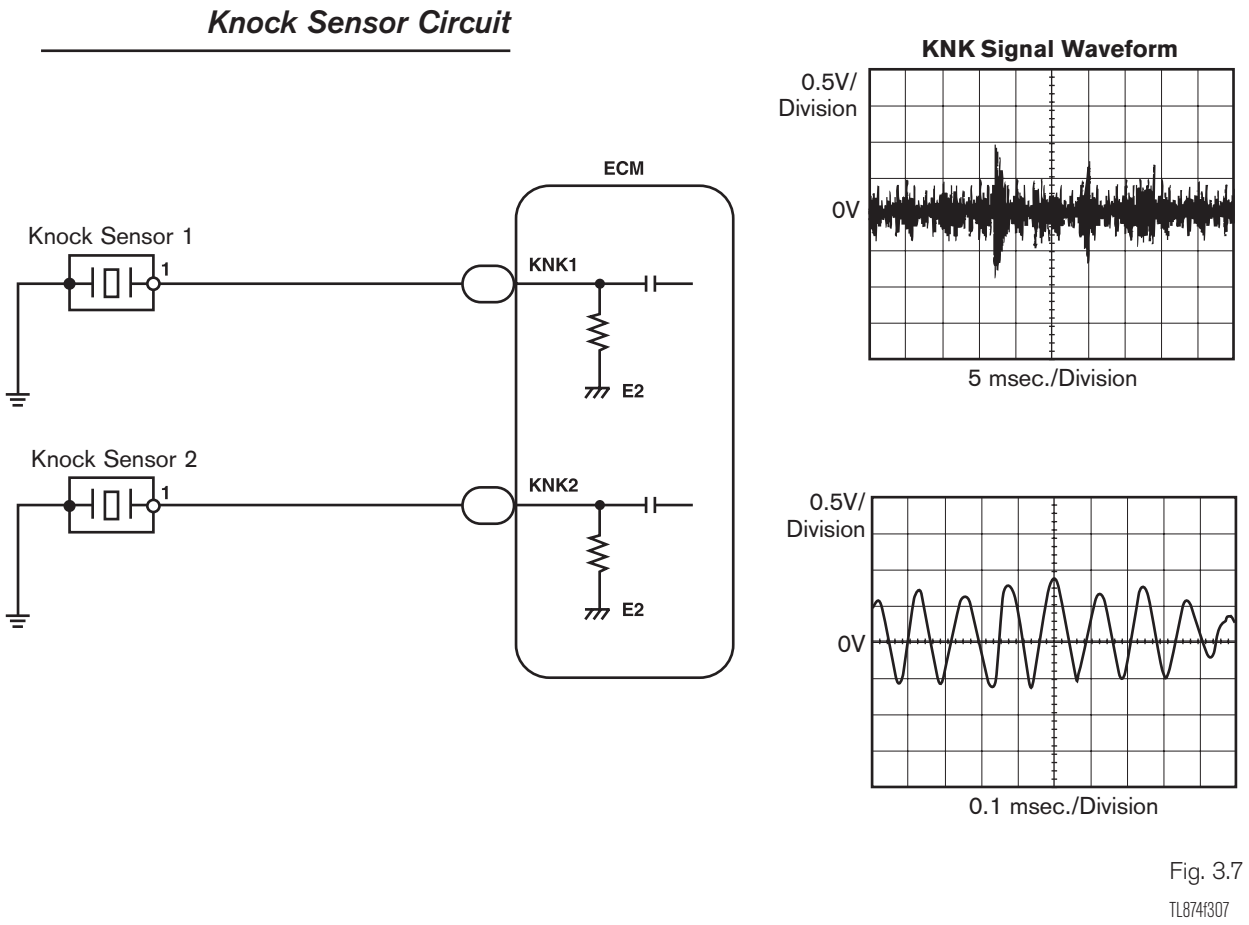

Fig. 3.7

TL874f307

Knock Sensor Circuit

The ECM looks for a signal from the knock sensor when the engine is operating under certain conditions. If the signal is not present, the ECM will retard the timing and the driver may notice a loss of power. The MIL will come on during the first trip.

***P0325** Knock Sensor 1 Circuit*

ENABLING STRATEGY	DETECTING CONDITION	TRIP(S)	ECM STRATEGY
Engine Speed 2000-5600 rpm	No Knock Sensor signal at the ECM	1	Fail-Safe Mode MIL ON Steady Max Timing retarded

***P0330** Knock Sensor 2Circuit*

ENABLING STRATEGY	DETECTING CONDITION	TRIP(S)	ECM STRATEGY
Engine Speed 2000-5600 rpm	No Knock Sensor signal at the ECM	1	Fail-Safe Mode MIL ON Steady Max Timing retarded

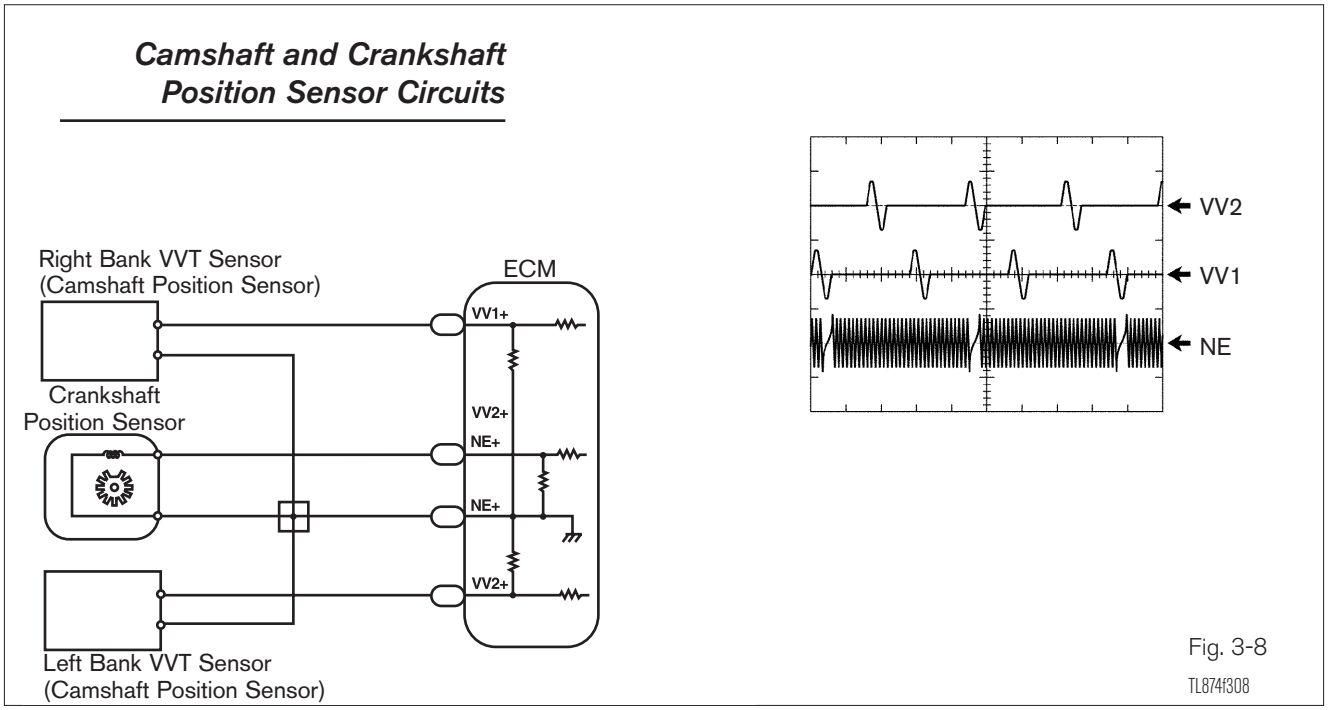

Fig. 3-8

Crankshaft Position Sensor Circuit

The ECM has two modes for detecting a fault in the crankshaft position sensor circuit and they both set the same DTC.

***P0335** Crankshaft Position Sensor "A" Circuit Malfunction*

ENABLING STRATEGY	DETECTING CONDITION	TRIP(S)	ECM STRATEGY
Engine Cranking	No Crankshaft Position Sensor signal received by ECM	2	
Engine Speed ≥ 600 rpm	No Crankshaft Position Sensor signal received by ECM	2	

Camshaft Position Sensor Circuit

The ECM has two modes for detecting a fault in the camshaft position sensor circuit and they both set the same DTC.

***P0340** Camshaft Position Sensor Circuit Malfunction*

ENABLING STRATEGY	DETECTING CONDITION	TRIP(S)	ECM STRATEGY
Engine Cranking	No Camshaft Position Sensor signal received by ECM	2	
Engine Speed ≥ 600 rpm	No Camshaft Position Sensor signal received by ECM	2	

P0420/P0430 *Catalyst System Efficiency Below Threshold (B1/B2)*
See Catalytic Converter Diagnosis section

P0440 *Evaporative Emission Control System Malfunction*

P0441 *Evaporative Emission Control System Incorrect Purge Flow*

P0446 *Evaporative Emission Control System/Vent Control System Malfunction*

See Evaporative System Diagnostic section

NOTE These DTCs are the results of System Monitors.

Vehicle Speed Sensor Circuits

There are many styles of speed sensor circuits. When diagnosing a vehicle speed sensor DTC, also refer to other relevant sections such as combination meter or ABS.

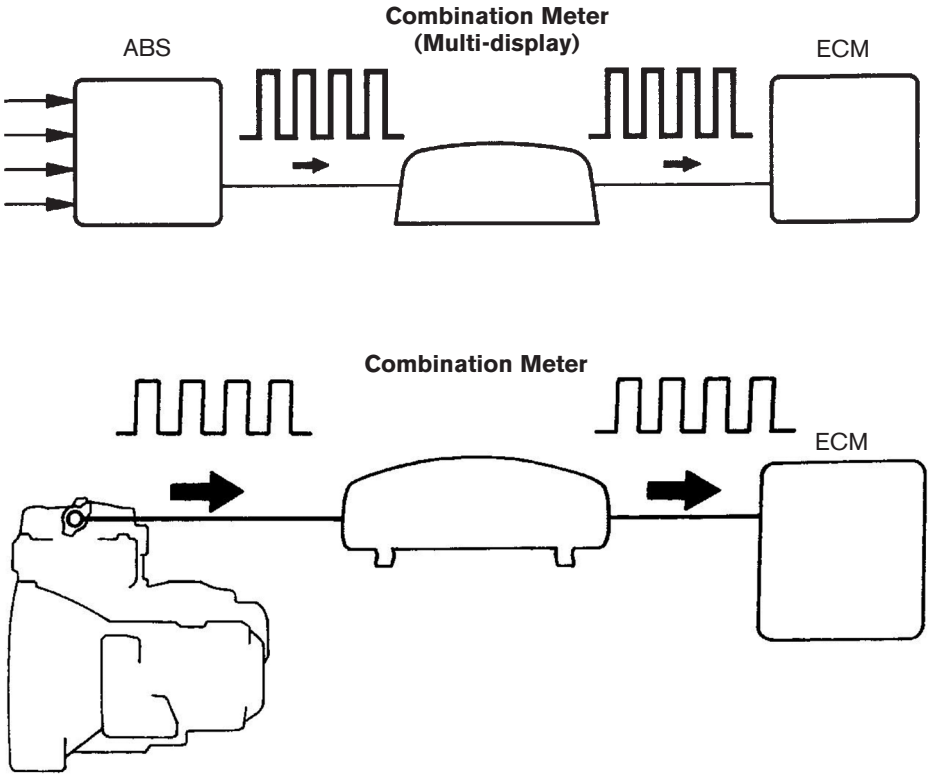

Fig. 3-9
TL874f309

Vehicle Speed Sensor Circuit

The ECM determines the vehicle speed based on the frequency of the pulse signals from the speed sensor. The speed sensor signal can come from the transmission/transaxle or ABS ECU.

***P0500** Vehicle Speed Sensor Malfunction*

ENABLING STRATEGY	DETECTING CONDITION	TRIP(S)	ECM STRATEGY
Park/Neutral switch is OFF Vehicle is being driven	No vehicle speed signal to ECM	2	

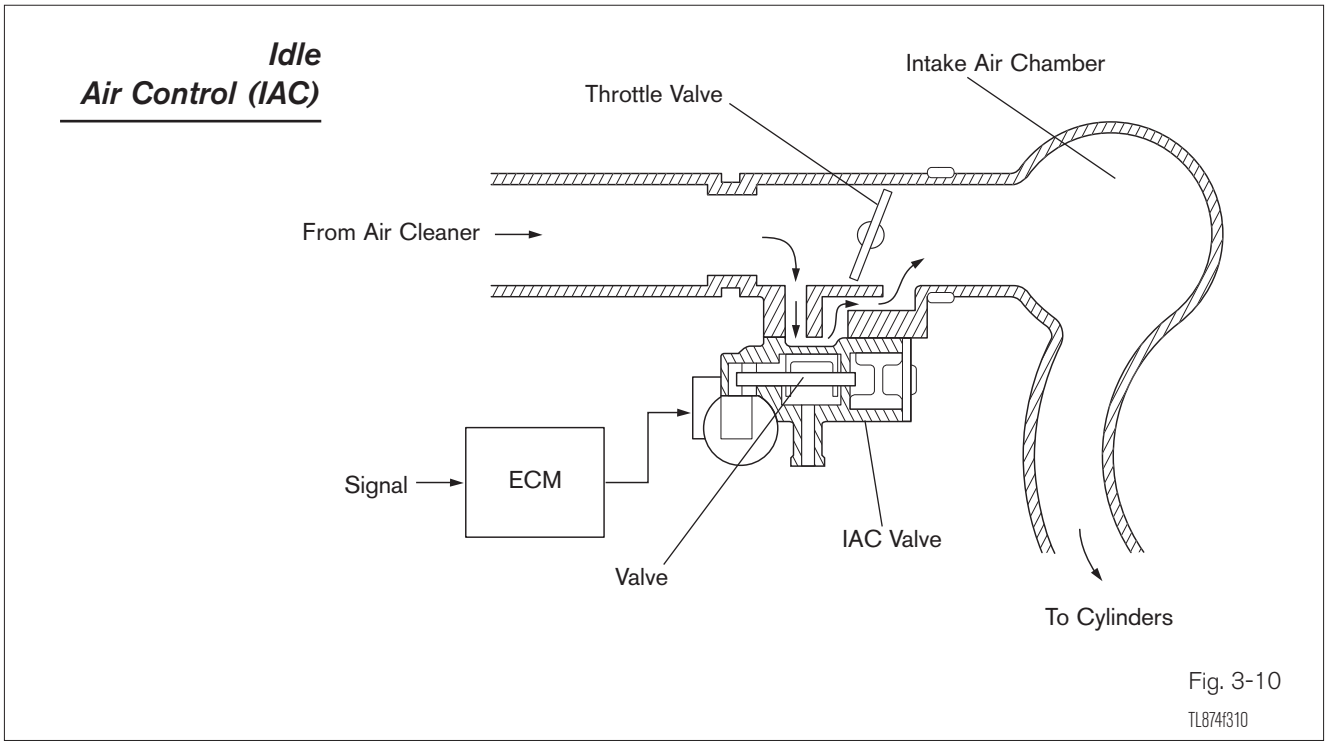

Fig. 3-10

Idle Air Control (IAC)

The ECM compares the actual engine idle speed to its target idle speed. If it is out of range, as determined by the ECM, the DTC will set, and the MIL will light on the second trip.

***P0505** Idle Air Control Malfunction*

ENABLING STRATEGY	DETECTING CONDITION	TRIP(S)	ECM STRATEGY
Engine running @ idle	Idle Speed varies greatly from Target Idle	2	

Accelerator Pedal Position Sensor Circuit

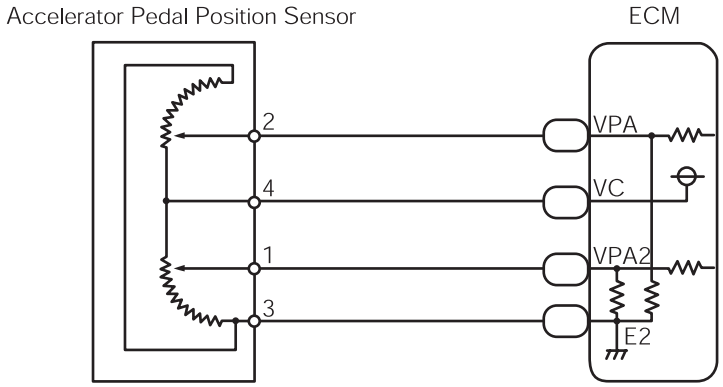

Fig. 3-11

TL874f311

Acceleration Pedal Position Sensor Circuit

DTC P1120 is a one trip DTC that sets when the accelerator pedal position sensor either shows an open or short in the circuit.

DTC P1121, the ECM calculates the output voltages between VPA and VPA2 and compares with its preprogrammed specifications to determine if the sensors are out of range.

***P1120** Accelerator Pedal Position Sensor Circuit Malfunction*

ENABLING STRATEGY	DETECTING CONDITION	TRIP(S)	ECM STRATEGY
Key ON	VPA ≤ 0.2V VPA2 ≤ 0.5V VPA ≥ 4.8V VPA ≥ 0.2V and ≤ 1.8V, and VPA2 ≥ 4.97V Time ≥ 2 sec. OR VPA ≤ 0.2V and VPA2 ≤ 1.5V VPA-VPA2 ≤ 0.02V Time ≥ 0.4 sec.	1	Fail-Safe Mode

***P1121** Accelerator Pedal Position Sensor Range/Performace Problem*

ENABLING STRATEGY	DETECTING CONDITION	TRIP(S)	ECM STRATEGY
Key ON	Difference between VPA and VPA2 is out of threshold	1	Fail-Safe Mode

Throttle Control Motor Circuit

DTC P1125, ECM judges the throttle motor current value to determine if there is an open or short in the circuit. This is a one trip DTC.

***P1125** Throttle Control Motor Circuit Malfunction*

ENABLING STRATEGY	DETECTING CONDITION	TRIP(S)	ECM STRATEGY
Engine running	Throttle Control Motor output duty ≥ 80% Throttle Control Motor current ≤ 0.5V Time = 0.5 sec. OR Throttle Control Motor current ≥ 16A OR Throttle Control Motor current ≥ 7A Time = 0.6 sec.	1	Fail-Safe Mode

Electro-magnetic Clutch Circuit

DTC P1126, ECM judges the current value to determine if there is an open or short in the circuit. This is a one trip DTC.

***P1126** Electromagnetic Circuit Malfunction*

ENABLING STRATEGY	DETECTING CONDITION	TRIP(S)	ECM STRATEGY
Key ON	Magnetic clutch current ≥ 1.4A or ≤ 0.4A Time = 0.8 sec. OR Magnetic clutch current ≥ 1.0A or ≤ 0.8A Time = 1.5 sec.	1	Fail-Safe Mode

ETCS Actuator Power Source Circuit

DTC P1127 is set when there is no current supplied to the ECM from the ETCS switch. This is a one trip DTC.

***P1127** ETCS Actuator Power Source Circuit Malfunction*

ENABLING STRATEGY	DETECTING CONDITION	TRIP(S)	ECM STRATEGY
Key ON	No current supplied to +BM terminal of ECM	1	Fail-Safe Mode

Throttle Control Motor Lock

DTC P1128 is set when signal from TPS indicates that the throttle valve-opening angle is not in response with the driving condition.

***P1128** Throttle Control Motor Lock Malfunction*

ENABLING STRATEGY	DETECTING CONDITION	TRIP(S)	ECM STRATEGY
Engine running	Locked throttle control motor during throttle control motor mode.	1	Fail-Safe Mode

Electronic Throttle Control System

DTC P1129 sets when the ETCS either electrically or mechanically malfunctions.

***P1129** Electronic Throttle Control System Lock Malfunction*

ENABLING STRATEGY	DETECTING CONDITION	TRIP(S)	ECM STRATEGY
Key ON	Throttle opening angle varies greatly in comparison to the target throttle opening angle	1	Fail-Safe Mode

NOTE P1120, P1121, P1125, P1126, P1127, P1128, P1129 DTCs are found in vehicles equipped with Electronic Throttle Control System (ETCS). Always refer to Repair Manual for further information.

***P1130/P1150** A/F Sensor Circuit Range/Performance Malfunction (B1,S1/B2,S1)*

***P1133/P1153** A/F Sensor Circuit Response Malfunction (B1,S1/B2,S1)*

***P1135/P1155** A/F Sensor Heater Circuit Malfunction (B1,S1/B2,S1)*
See O2 and A/F Sensor Diagnosis section

NOTE These DTCs are the results of System Monitors. Refer to the appropriate section for more information.

Notes

Engine Misfire Diagnosis

Overview

It used to be that engine misfire was primarily diagnosed with a variety of test equipment and a logical troubleshooting procedure using a process of elimination to determine the cause. With OBD II, an engine misfire monitor detection is part of the ECM's diagnostic program and the cylinder that is misfiring is reported on a scan tool. However, not all misfires can be detected in this manner. The misfire detection program is keyed towards engine emissions, not a smooth running engine.

Included in this section is an overview of engine diagnosis. This area provides explanations on no start and other engine conditions.

Misfire Monitor

The misfire monitor serves two purposes. The first reason for the monitor is to determine if a misfire is severe enough to damage the catalytic converter. The second reason is to monitor for any misfire that would raise emission levels above the standard. The misfire monitor is a continuous monitor.

The ECM measures crankshaft acceleration via the crankshaft position sensor. The crankshaft will briefly accelerate each time a cylinder is on the power stroke. When the cylinder misfires, the crankshaft slows down instead of speeding up. The ECM detects the change in frequency in the crankshaft position sensor signal (NE). The ECM is able to identify the cylinder on the power stroke from the camshaft position sensor signal (G). Severe rough road conditions may temporarily suspend misfire monitor operation.

Misfire Detection

When the ignition counter is cycling, the misfire monitor is operating. A percentage above zero indicates the cylinder(s) that is misfiring.

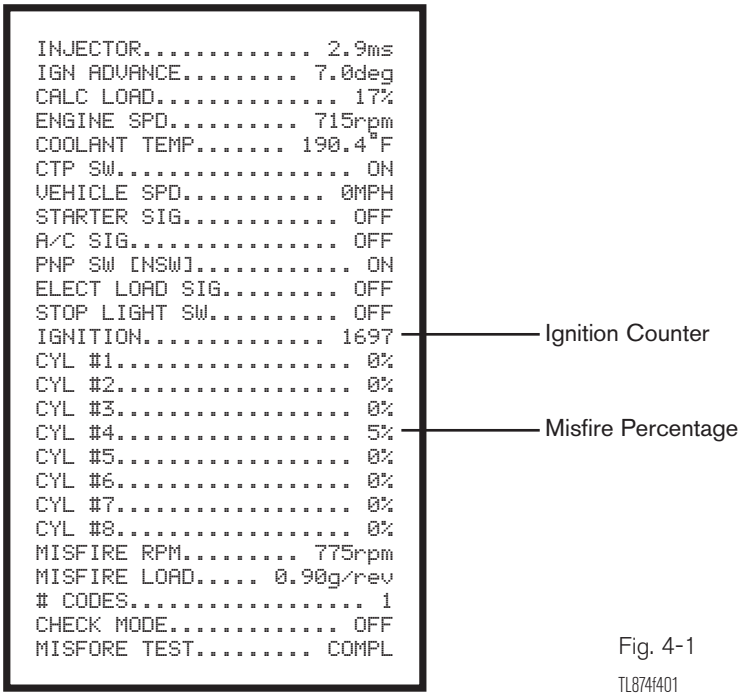

Fig. 4-1

TL874f401

The Diagnostic Tester will display the cylinder and the percentage of misfire. As you will you see, misfire monitor operation varies with the model year and operating conditions.

Misfire Type A (One Trip)

The Type A misfire is a misfire severe enough to damage the catalytic converter. The MIL will blink if the misfire would result in catalyst temperatures of 1000°C (1832°F) or more.

The catalyst temperature is calculated by the ECM based on driving conditions and the percentage of misfire. The higher the percentage of misfire and engine load, the more likely the ECM will cause the MIL to blink.

The blinking MIL will warn the driver of pending catalyst damage and is the only condition that will cause the MIL to blink. The blinking will continue only when the misfire is severe enough to cause catalytic converter damage.

NOTE A pending misfire DTC can be observed in CARB, Mode 7, Continuous Test screen or Pending Codes.

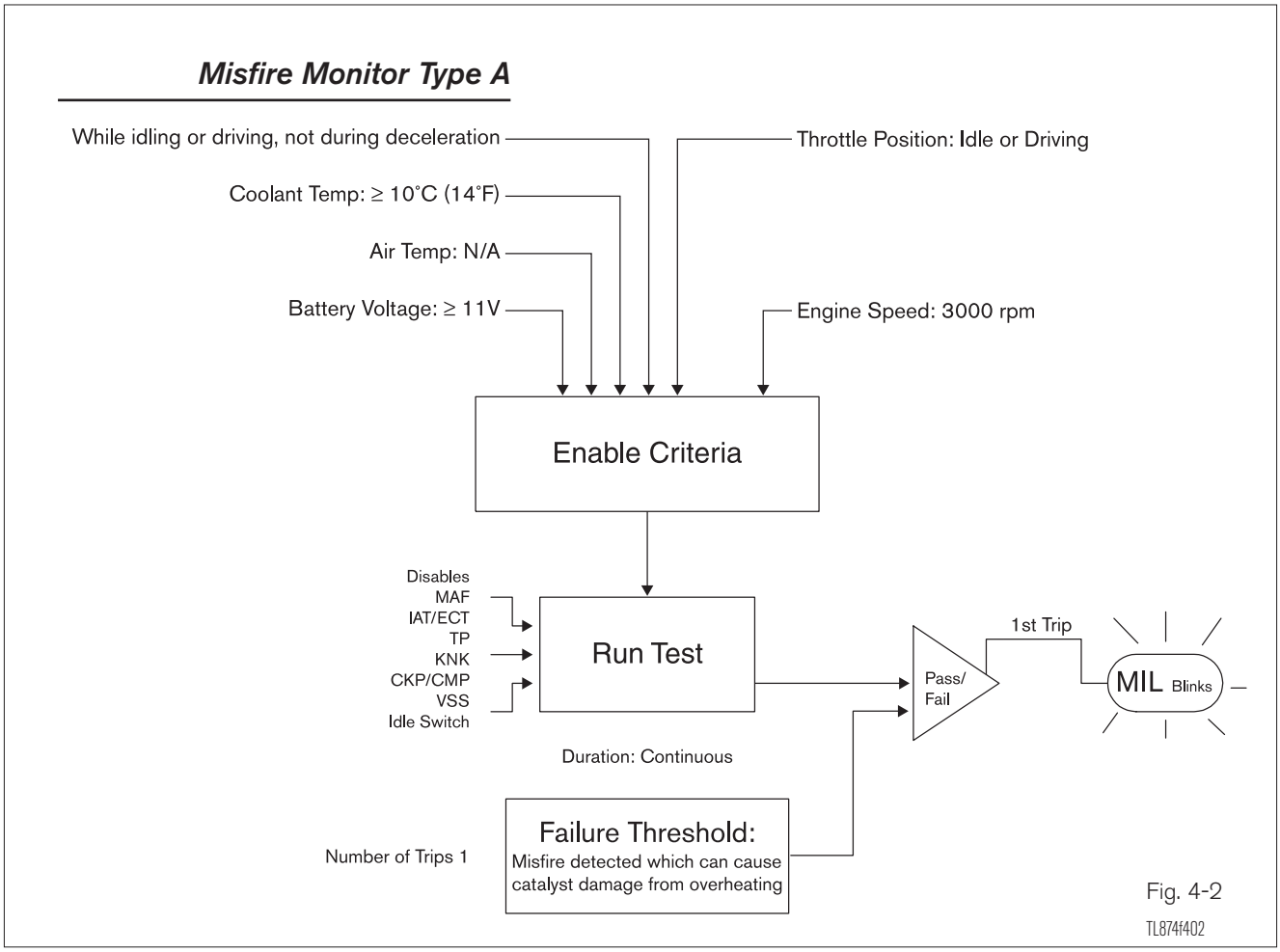

Fig. 4-2

Misfire Type B (Two Trip)

The type B misfire is less severe. It will increase emissions above standards, but will not damage the catalytic converter. This type of misfire is determined by the percentage of misfire compared to ECM emission specifications. If the percentage misfire causes the emissions to increase beyond a specified level, a DTC will set on the second trip. Type B misfire is a two trip monitor.

The MIL does not blink for these DTCs.

NOTE A pending misfire DTC can be observed in CARB, Mode 7, Continuous Test screen or Peding Codes.

Misfire Monitor Type B P0300, P0308

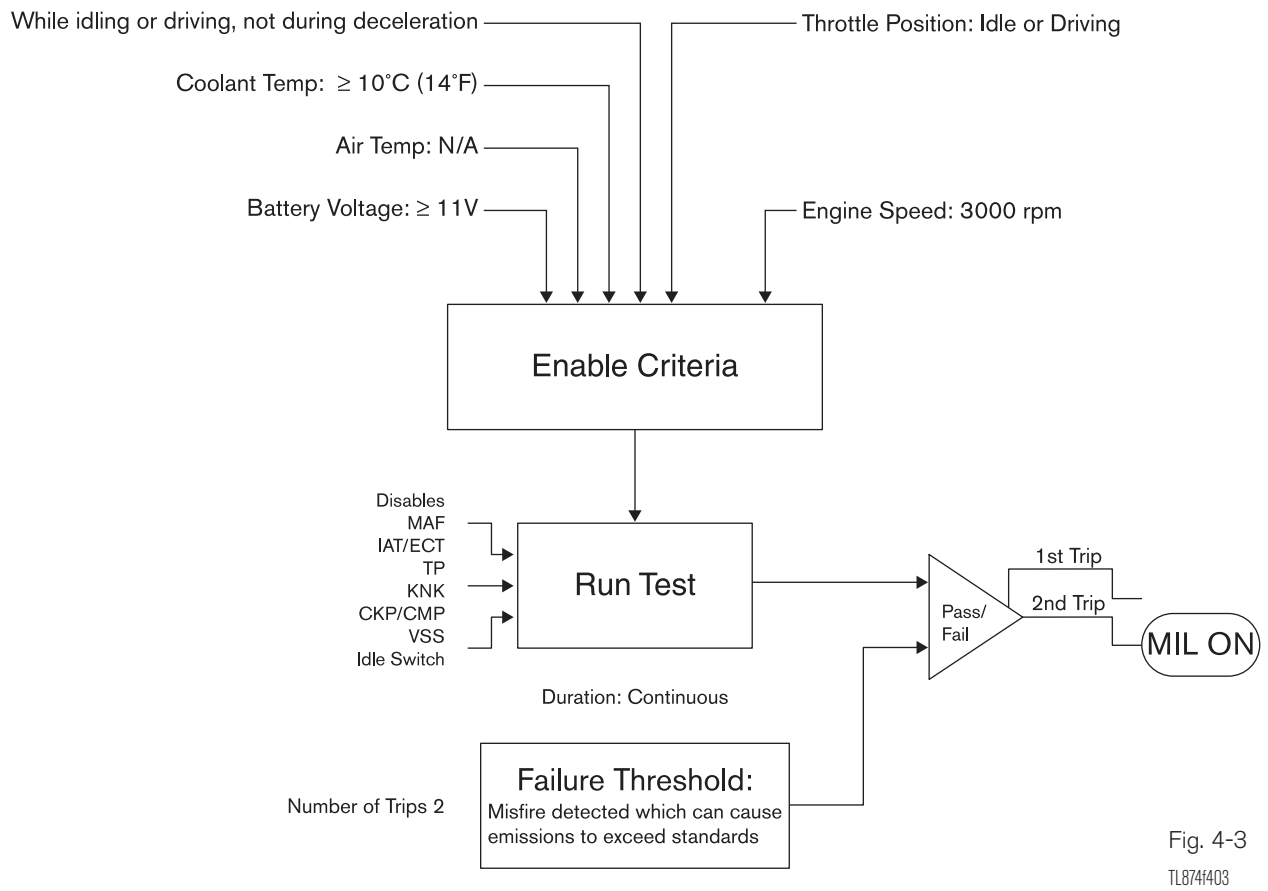

Fig. 4-3

TL874f403

Time Period to Duplicate Misfire Conditions

The Repair Manual provides a chart similar to the one shown. Use this chart along with the Freeze Frame data to reproduce misfire conditions.

Engine Speed	Time
Idling	3 minutes 30 seconds or more
1000 rpm	3 minutes or more
2000 rpm	1 minute 30 seconds or more
3000 rpm	1 minute or more

Fig. 4-4

TL874f404

Ignition Counter (1000 Revolutions)

1994 ~ 1998 and some 1999 MY OBD II vehicles: The Diagnostic Tester displays an Ignition Count that reflects the number of firing events that take place in 1000 engine revolutions. Each cylinder fires every other revolution, thus each cylinder will fire 500 times in 1000 revolutions.

Ignition Count vs. Number of Firing Cycles per Cylinder

The Diagnostic Tester display will show the Ignition Counter recycling at a different count based on the number of cylinders.

Number of Cylinders		Number of Firing Events per Cylinder in 1000 Revolutions		Ignition Count
4	x	500	=	2000
6	x	500	=	3000
8	x	500	=	4000

Fig. 4-5

TL874f405

1000 Revolutions

Misfire counter repeats each 1000 revolutions or 2000 ignitions for a 4 cylinder engine shown here.

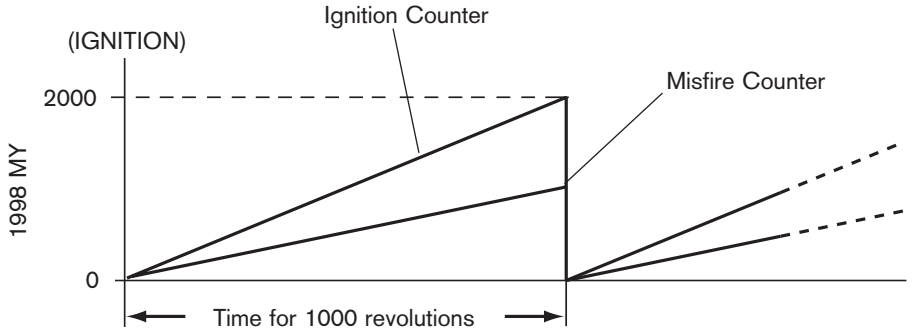

Fig. 4-6

TL874f406

Ignition Counter (200 Revolutions)

Some 1999 and newer MY OBD II vehicles: The Diagnostic Tester displays an Ignition Count that reflects the number of firing events that take place in 200 engine revolutions. Each cylinder fires every other revolution, thus each cylinder will fire 100 times in 200 revolutions.

Ignition Count Based on 200 Revolutions

1999 and newer vehicles will display the Ignition Count based on 200 revolutions.

Number of Cylinders		Number of Firing Events per Cylinder in 200 Revolutions		Ignition Count
4	x	100	=	400
6	x	100	=	600
8	x	100	=	800

Fig. 4-7

TL874f407

200 Revolutions

Misfire counter repeats each 200 revolutions or 400 ignitions for a 4 cylinder engine shown here.

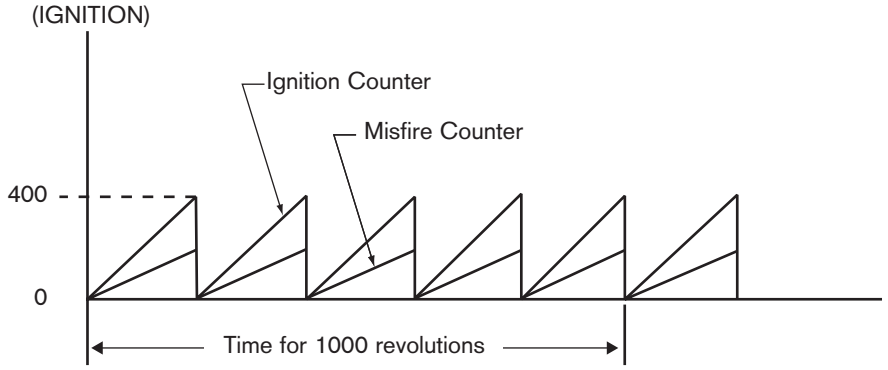

Fig. 4-8

TL874f408

Although the Diagnostic Tester only displays the 200 revolution ignition counter, the ECM monitors five multiples of the 200 counter to total 1000 revolutions for a misfire that would increase emissions above standards. Thus the internal logic uses 200 revolutions for a misfire that would damage the catalytic converter and 1000 revolution counter for an increase in emissions.

Misfire Monitor Screens

CARB Screens

```
CONTINUOUS TESTS
ECU:  $10 (Engine)
Number of Tests: 1

P0304
Cylinder 4 Misfire
Detected
```

Enhanced OBD II Screens

```
ECU:  $10 (Engine)
Number of DTCs: 1
MIL ON

P0304
Cylinder 4 Misfire
Detected
```

```
FREEZE FRAME   0

TROUBLE CODE......... P0304
ENGINE SPD........... 683RPM
COOLANT TEMP......... 190°F
VEHICLE SPD........... 0MPH
CALC LOAD............ 18.0%
FUEL SYS #1............ CL
FUEL SYS #2............ CL
SHORT FT #1........... 0.8%
LONG FT #1........... -5.4%
SHORT FT #2..........-0.7%
LONG FT #2........... 12.5%
```

```
TROUBLE CODE......... P0304
CALC LOAD............. 18%
ENGINE SPD........... 683RPM
COOLANT TEMP....... 190.4°F
INTAKE TEMP........ 125.6°F
CTP SW................... ON
VEHICLE SPD........... 0MPH
SHORT FT #1........... 0.7%
LONG FT #1........... -5.5%
SHORT FT #2..........-0.9%
LONG FT #2........... 12.4%
FUEL SYS #1............ CL
FUEL SYS #2............ CL
FC IDL................ OFF
STARTER SIG........... OFF
A/C SIG............... OFF
PNP SW [NSW]........... ON
ELECT LOAD SIG........ OFF
STOP LIGHT SW......... OFF
ENG RUN TIME........... 80
```

Fig. 4-9

TL874f409

Misfire DTC(s)

P0300: Random/ Multiple Cylinder Misfire Detected

Misfiring of random cylinders is detected during any particular 200 or 1000 revolutions (two trip detection logic). This code can be set from multiple cylinders randomly misfiring.

P0301: Cylinder 1 Misfire Detected

Cylinder 1 misfire detected during any particular 200 or 1000 revolutions which can cause catalyst overheating or deterioration in emissions (two trip detection logic).

P0302: Cylinder 2 Misfire Detected

Cylinder 2 misfire detected during any particular 200 or 1000 revolutions which can cause catalyst overheating or deterioration in emissions (two trip detection logic).

P0303: Cylinder 3 Misfire Detected

Cylinder 3 misfire detected during any particular 200 or 1000 revolutions which can cause catalyst overheating or deterioration in emissions (two trip detection logic).

P0304: Cylinder 4 Misfire Detected

Cylinder 4 misfire detected during any particular 200 or 1000 revolutions which can cause catalyst overheating or deterioration in emissions (two trip detection logic).

P0305: Cylinder 5 Misfire Detected

Cylinder 5 misfire detected during any particular 200 or 1000 revolutions which can cause catalyst overheating or deterioration in emissions (two trip detection logic).

P0306: Cylinder 6 Misfire Detected

Cylinder 6 misfire detected during any particular 200 or 1000 revolutions which can cause catalyst overheating or deterioration in emissions (two trip detection logic).

P0307: Cylinder 7 Misfire Detected

Cylinder 7 misfire detected during any particular 200 or 1000 revolutions which can cause catalyst overheating or deterioration in emissions (two trip detection logic).

P0308: Cylinder 8 Misfire Detected

Cylinder 8 misfire detected during any particular 200 or 1000 revolutions which can cause catalyst overheating or deterioration in emissions (two trip detection logic).

Causes of Engine Misfire

Troubleshooting

This type of diagnosis requires an understanding of engine basics and a working knowledge of the subsystems involved in getting the engine to start and keeping it running. The Basic Inspection and Problem Symptoms chart should be followed to locate the problem.

Fundamentally, there are four conditions that must be satisfied to prevent engine misfire:

- Engine compression - this procedure is found in the beginning of the EM section
- Fuel delivery – this procedure is found in the beginning of the SF section
- Ignition spark - this procedure is found in the beginning of the IN section
- Free breathing intake and exhaust system

Perform a preliminary inspection before any pinpoint troubleshooting takes place. Perform a Diagnostic Circuit Inspection, to narrow down the scope of your investigation. The Diagnostic Circuit Inspection includes:

Malfunction Indicator Lamp (MIL) Check:

- By confirming MIL operation, you eliminate power distribution and a grounded Vc circuit from your investigation

Diagnostic Code Check:

- If codes are stored, they could very possibly be the cause of the misfire condition.

Another important quick check to perform is an inspection of critical data parameters using the Diagnostic Tester. Abnormalities in any of the following signals may have an impact on engine misfire:

- Engine RPM (NE)
- Engine cranking signal (STA)
- Engine Coolant Temperature (ECT/THW)
- Injection duration
- Ignition timing (spark advance)

NOTE Injection duration and ignition spark parameters may display normal values on serial data even when injection pulse or ignition trigger are not present. Use a DVOM or V-BoB oscilloscope to display real circuit voltage signals if pinpoint tests are necessary in these areas.

A specific series of events must occur in several engine control subsystems for proper combustion. The following will address these subsystems, their normal function, and specific checks to verify normal operation.

Basic Mechanical Functions - the following must be satisfactory:

- the engine must develop at least 80% of normal compression
- the air/fuel mixture must be in the correct proportion
- the intake and exhaust systems must be free of any abnormal restrictions
- the ignition secondary system must be in good condition without leakage to ground
- engine mechanical components must be in good condition and in the proper relationship to each other. For example, the crankshaft timing pulley must be in the correct location on the crankshaft and correctly timed to the camshaft timing pulleys

It is important to realize that the ratio of air to fuel needs to vary to meet engine operating conditions. A stoichiometric A/F Ratio is needed for efficient catalytic converter operation. During starting, acceleration, and under heavy load, the mixture needs more fuel. During light cruise and decel, less fuel is needed.

Engine symptoms can provide important clues. An extremely rich mixture fouls spark plugs. A mixture too lean typically causes a backfire (usually during cold weather). See Fuel System Diagnosis for more information.

Primary Ignition Circuit (ESA)

When the engine is running, current flows to the ignition coil primary circuit and to the igniter +B terminal (to power the igniter electronics). As the crankshaft rotates, the crankshaft speed and position signals (NE and G) are sensed at the ECM supplying information necessary to calculate the Ignition Timing Signal (IGT). The ECM sends the IGT signal to the igniter firing the coil.

When the igniter detects the primary coil circuit current rise and fall, the igniter triggers an IGF signal (see Engine Control Systems I). When the ECM does not detect the IGF signal, the ECM goes into fail-safe mode. With no IGF signal, the ECM will store the P1300 series DTCs, depending on model year and number of cylinders affected. There are different fail-safe modes depending on type of ignition system, cylinder displacement and model year. The following is a general summary.

- If there is no IGF signal on engines before 1998 model year, the ECM will enter fuel fail-safe and turn off all the fuel injectors.

- Beginning with the 1998 model year, V-6 and V-8 engines equipped with direct ignition system with integrated ignition coil/igniter (1 ignition coil/igniter per cylinder), the engine will still run without the IGF signal, but the MIL will be ON.

- Beginning with the 2001 model year on 1 ignition coil/igniter per cylinder engines, the ECM fail-safe will turn off the fuel injector if there is no IGF signal for that cylinder and if engine conditions (such as load and temperature) are sufficient to damage the catalytic converter. If the IGF signal returns to normal while the engine is running, the injector may remain off until the next engine start.

NOTE

Regardless of the type of IGF fail-safe mode, the IGF DTCs must be diagnosed before attempting to diagnose a fuel system/injection problem. The IGF DTCs (P1300 series) are one trip DTCs.

Quick checks using a noid light on one of the injectors confirms if the ECM is pulsing the injector(s).

Check for spark as outlined in the Basic Inspection section of the Repair Manual. IG section of the Repair Manual contains more information on ignition system diagnosis.

Circuit Inspection using a DVOM or V-BoB: Inspect the following signals for behavior as indicated above; NE, G, IGT, IGF. Refer to the appropriate Repair Manual circuit inspection charts and to the Engine Control System schematic in the EWD for troubleshooting details.

WORKSHEET 4-1
Misfire Detection Monitor

Vehicle	Year/Prod. Date	Engine	Transmission

Worksheet Objectives

Accurately interpret cylinder misfire data.

Tools and Equipment

- Vehicle
- Vehicle Repair Manual, EWD, & NCF
- Diagnostic Tester
- TIS Access
- Hand Tools, Fender Covers, Floor Mats, and Shop Towels

Section 1

1. Connect Diagnostic Tester to vehicle.

2. Disconnect a fuel injector connector.

3. Start the engine. Observe the MISFIRE DATA LIST under ENHANCED OBD II.

4. What cylinder is misfiring? _____

5. If the MIL is blinking, check CARB OBD, CONTINUOUS TESTS or PENDING CODES.

   What DTC is displayed? _____

6. What do the following Data List parameters represent?

MAF	
CALC LOAD	
MISFIRE RPM	
IGNITION	

Section 2

1. Why didn't a DTC set on the first trip? _____

2. Shut off the engine, wait 30 seconds, and restart. Wait approximately 3.5 mins. or until the MIL illuminates.

3. Is there a DTC and Freeze Frame? _____ Why? _____

4. Connect the fuel injector. Check for normal engine operation.

Section 5

Evaporative Systems Diagnosis

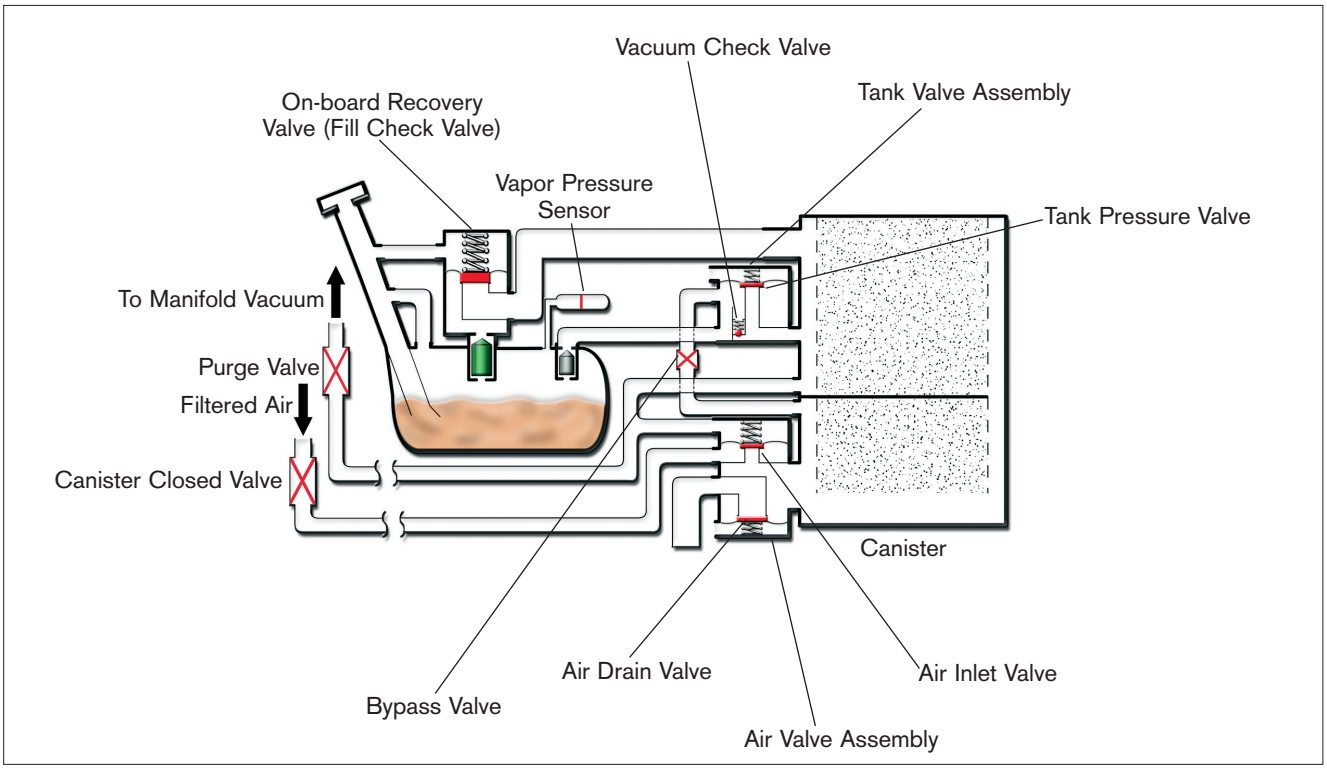

Learning Objectives:

1. Determine the condition of the EVAP system operation based on engine data and the EVAP pressure tester.
2. Determine the condition of the vapor pressure sensor.
3. Determine EVAP monitor status using Readiness Tests and CARB modes.

Notes

Evaporative System Diagnosis

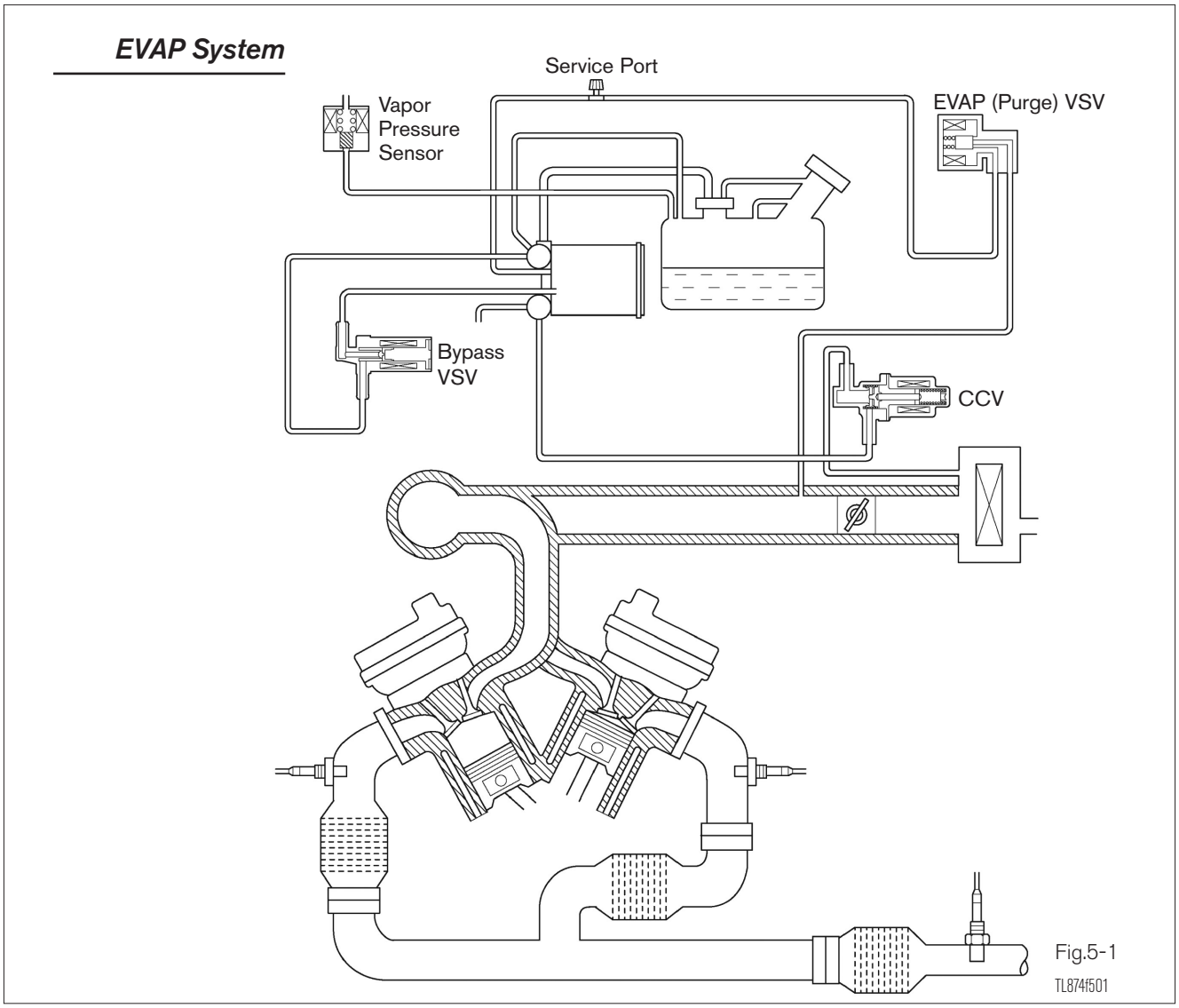

Fig.5-1

Overview

There are a variety of EVAP systems in use with different monitoring strategies. It is essential that the EVAP system be correctly identified before beginning diagnosis (the Repair Manual is the best source). The following information covers the different systems.

Usually, the customer is unaware of an EVAP system problem until the MIL illuminates. The customer needs to be aware that they must correctly install the fuel cap after refueling.

Check mode does not work for EVAP codes. Use the Readiness Test Confirmation procedure.

A common failure is a leak in the system, but restrictions will also set EVAP related DTCs.

EVAP System with ORVR

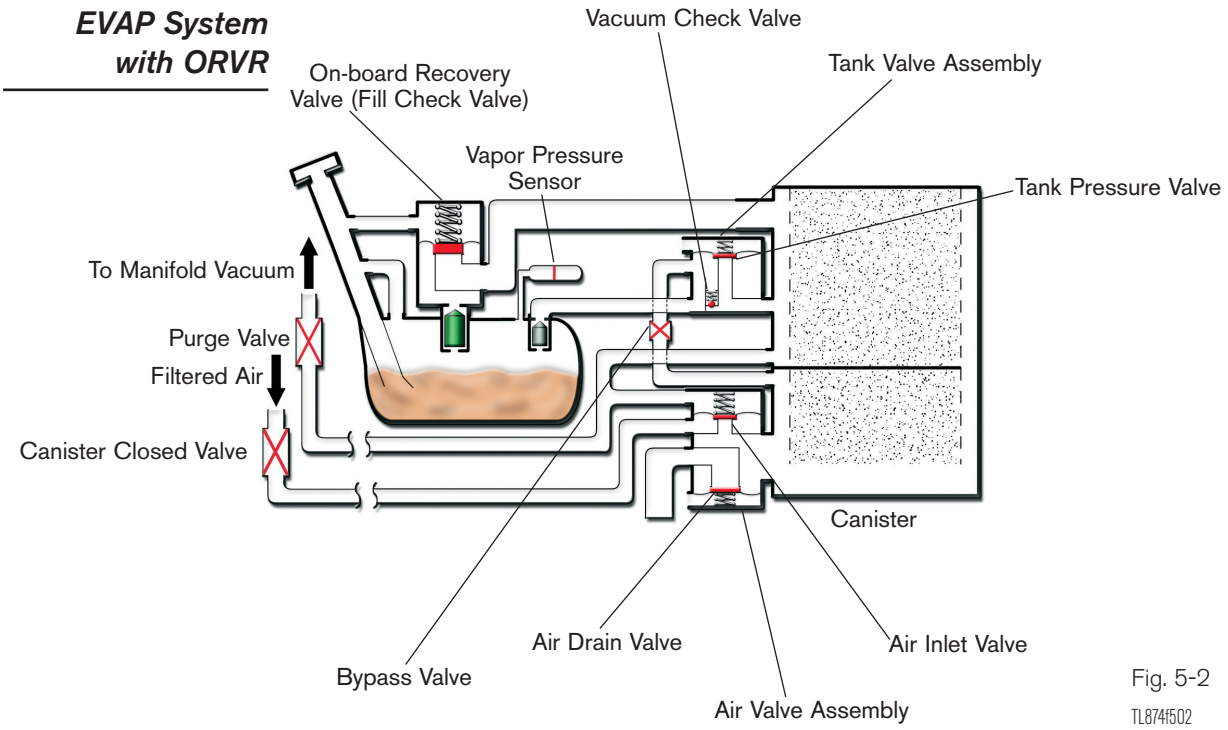

Fig. 5-2

TL874f502

Condition	Purge Port	Air Inlet Port	Tank Vacuum Ball Check	Tank Pressure Valve	ORVR Valve	Air Drain
VSV Purge Valve ON	OPEN (V)	OPEN (V)	CLOSED	CLOSED	CLOSED	CLOSED
VSV Purge Valve OFF	CLOSED (NV)	CLOSED (NV)	CLOSED	CLOSED	CLOSED	CLOSED
Pressure in Tank	CLOSED	CLOSED	CLOSED	OPEN	CLOSED	CLOSED
Vacuum in Tank			OPEN	CLOSED	CLOSED	CLOSED
Refill			CLOSED	CLOSED	OPEN	OPEN

Late Type EVAP Pressure in Fuel Tank

Fuel vapor pressure is vented into the charcoal canister when vapor pressure forces the tank pressure control valve open.

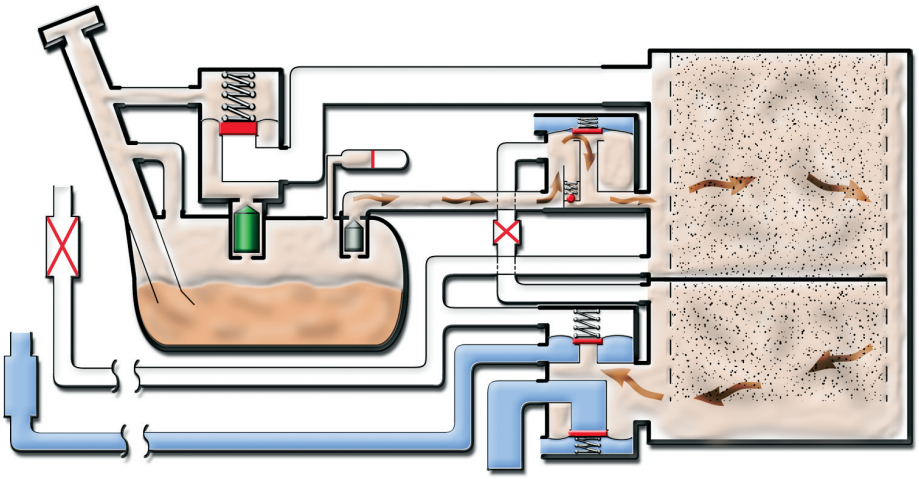

Fig. 5-3

TL874f503

Late Type EVAP Vacuum in Fuel Tank

Vacuum in the tank can be relieved by allowing air to enter through the charcoal canister or fuel tank cap.

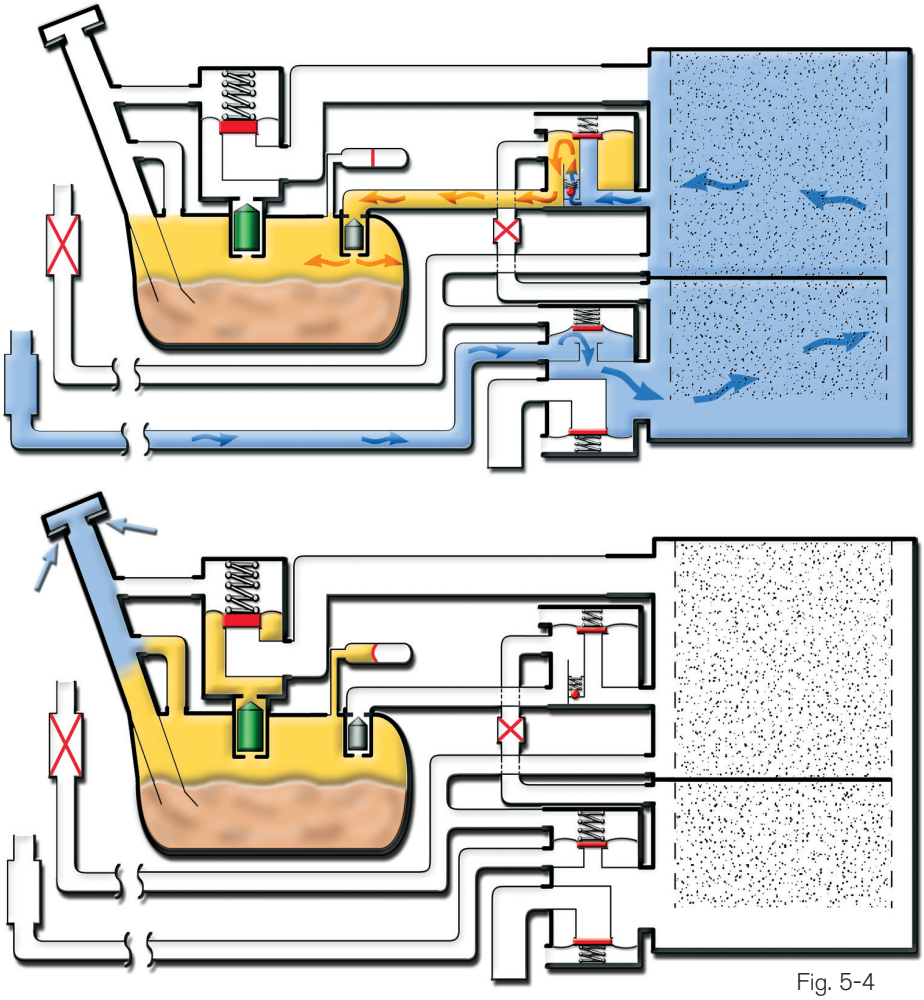

Fig. 5-4

TL874f504

Late Type EVAP Purge Mode

During purge, vapors are drawn out of the canister and burned in the engine.

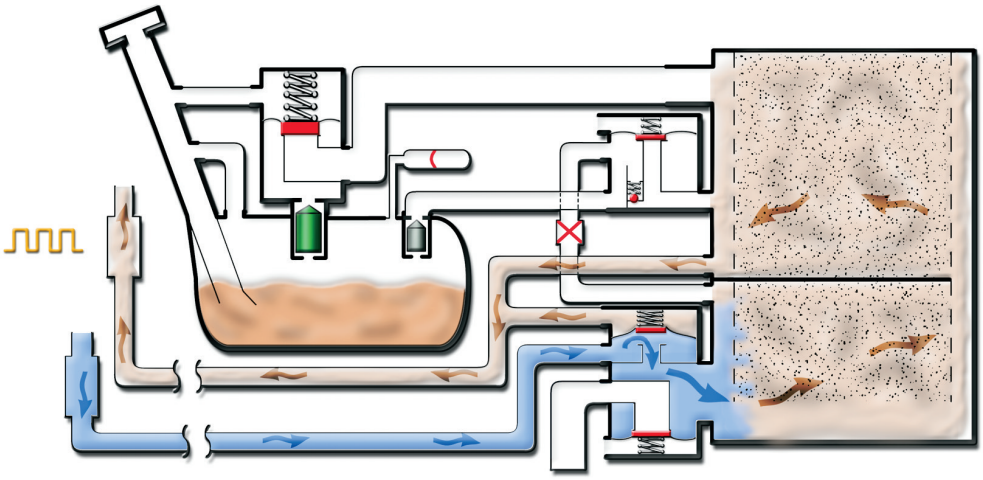

Fig. 5-5

TL874f505

Late Type EVAP ORVR Operation

During refueling, the differential pressure valve and air drain valve are open. Fuel vapors are absorbed by the charcoal canister and excess air is vented to the atmosphere.

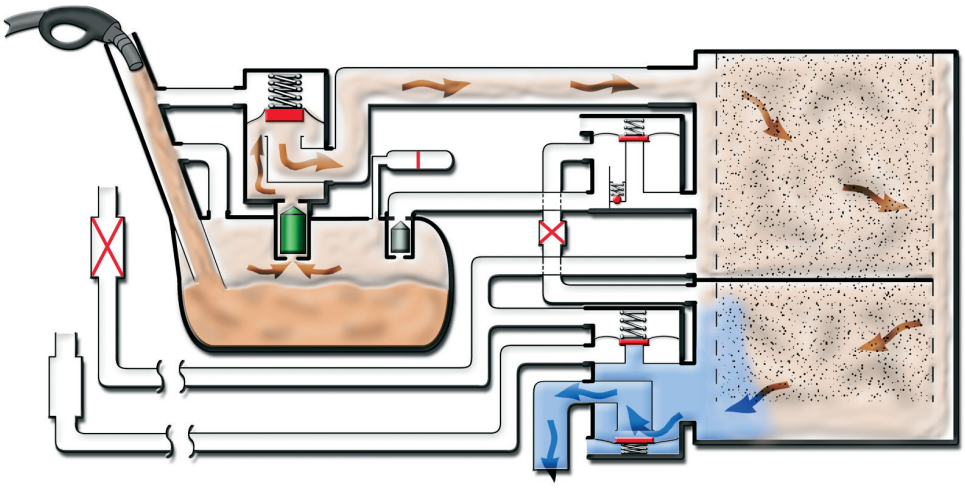

Fig. 5-6

TL8741506

Evaporative Systems Monitoring

Regulations require that the EVAP system be monitored for system performance and leak detection. Leaks, restrictions, and many components are checked by measuring the pressure of the EVAP system at various stages.

Early EVAP systems had to detect a 1mm (0.040 in.) hole and greater. It is often called the early type or non-intrusive system.

Beginning with 2000 model year, a new EVAP monitor system was implemented to meet the new, mandated standard of detecting a hole down to .5mm (0.020 in.). This new system is referred to as the Late Type or Intrusive Type. The intrusive system is being phased in.

In addition, the EVAP monitor has to monitor vapor purge and component performance. All EVAP monitor DTCs require two trips.

Early-Type (Non-Intrusive) Pressure Detection

The ECM relies on the VP sensor signal to accurately measure pressure in the EVAP system and the purge side of the charcoal canister. The changes in the pressures being measured are very small, often 15.5 mmHg (0.3 psi) or less. For the VP sensor to measure tank pressure and canister pressure, a three-way VSV is connected to the VP sensor, fuel tank and lines, and charcoal canister. When there is no power to the three-way VSV VP sensor, the VP sensor measures canister purge pressure. When the ECM turns on the VSV, the VP sensor measures fuel tank pressure.

Early Type EVAP Components

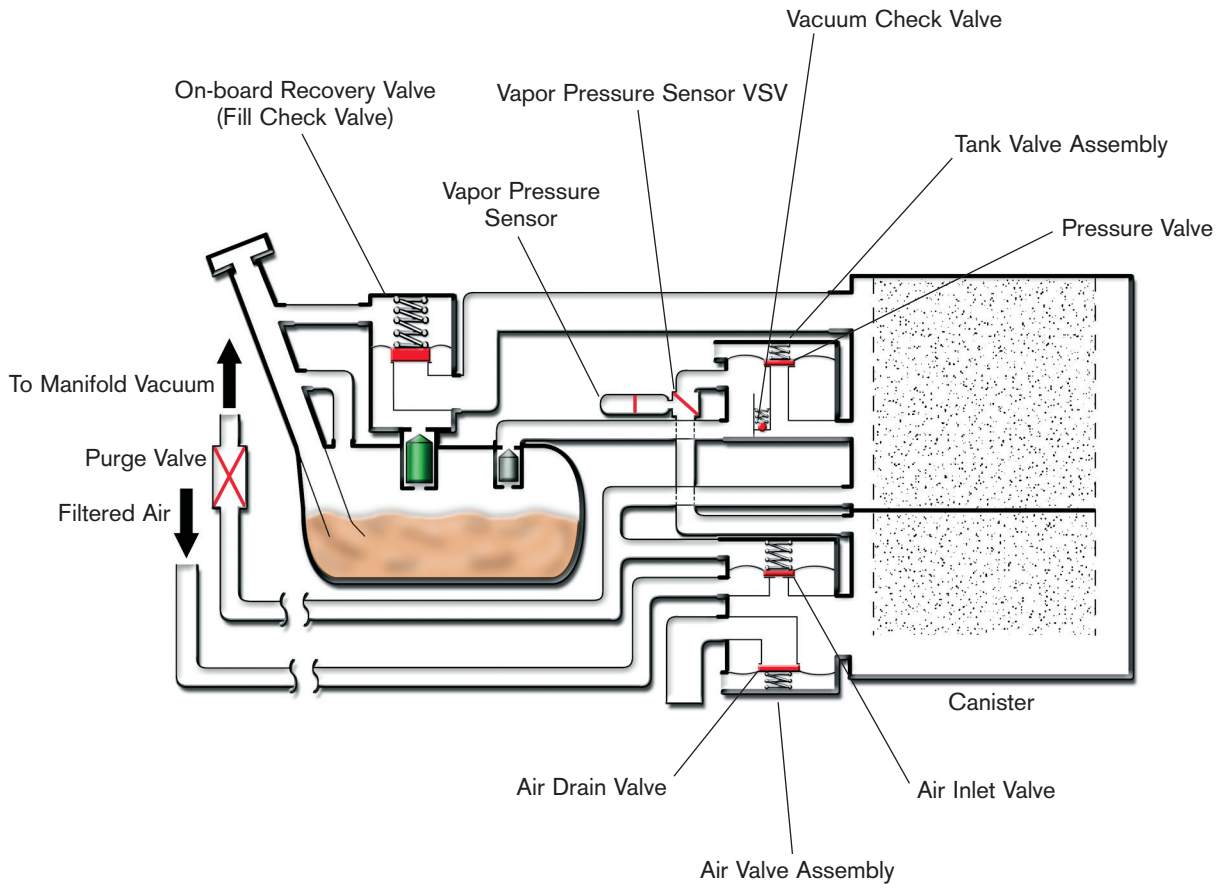

Fig. 5-7
TL874f507

EVAP Pressure Monitoring

The ECM tests for leaks by measuring EVAP system pressure in the lines, charcoal canister, and fuel tank. When the EVAP pressure is higher or lower than atmospheric pressure, the ECM concludes that no leaks are present. EVAP pressure is measured by the VP sensor. If either the tank or canister purge side is at atmospheric pressure under specific conditions, the ECM determines there is a leak.

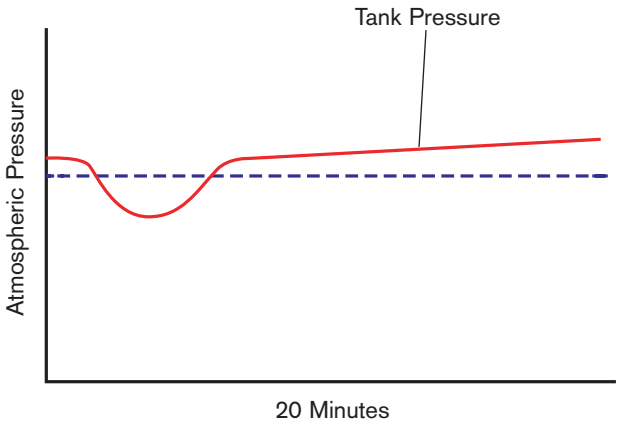

Fig. 5-8
TL874f508

HC Leak Detection - P0440, P0441, P0446

A leak can generate multiple DTCs depending on component and location. Refer to the Repair Manual for the proper sequence for diagnosing these DTCs.

The ECM tests for leaks by measuring EVAP system pressure in the lines, charcoal canister, and fuel tank. When the EVAP pressure is higher or lower than atmospheric pressure, the ECM concludes that no leaks are present. EVAP pressure is measured by the VP sensor. If either the tank or canister purge side is at atmospheric pressure under specific conditions, the ECM determines there is a leak.

The leak could be a filler cap not properly tightened, a hole in the lines, charcoal canister, or fuel tank. A visual inspection of the EVAP is performed for most EVAP diagnostic procedures. Inspection begins with the filler cap, hoses and tank.

The number of times the leak detection test is performed is determined by the regulations for that model year and test conditions. The monitor runs depending on engine temperature and vehicle operating conditions. If a leak is detected on two consecutive trips (providing the monitor ran and completed on each trip), the MIL is illuminated and a DTC is stored. **(For details for DTC(s) see P0440, P0441, & P0446)**

P0440: Evaporative Emission System Malfunction

If DTC P0440 is present, the leak is on the fuel tank side of the EVAP system. This also includes the lines between the fuel tank and part of the canister. When the VP sensor is measuring tank pressure, the ECM is observing changes in pressure and comparing tank pressure to atmospheric pressure. No difference in pressure indicates a leak. The ECM may take 20 minutes or more to complete testing the fuel tank side.

Evaporative Monitor P0440

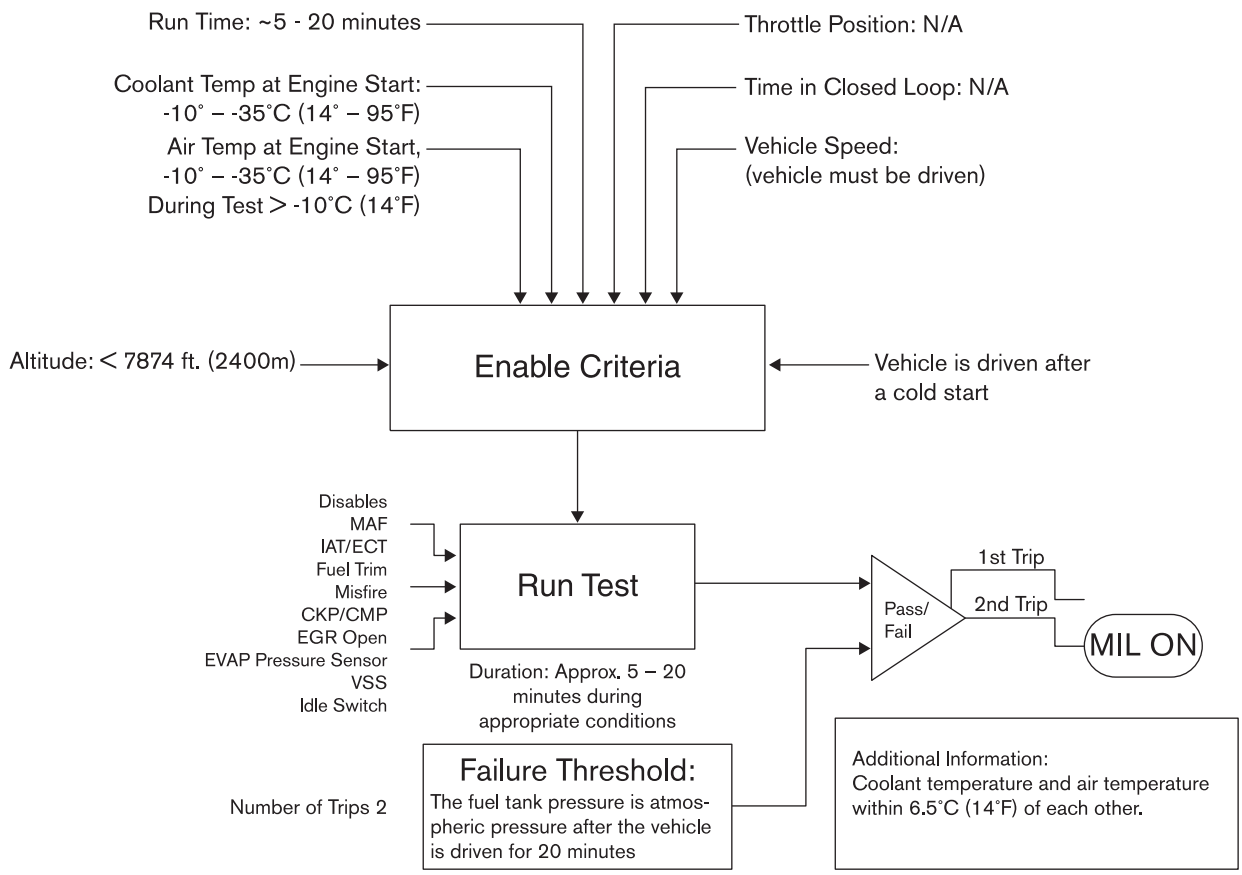

Fig. 5-9

TL874f509

Early Type EVAP Tank Side

If a leak is suspected, the shaded areas should be checked.

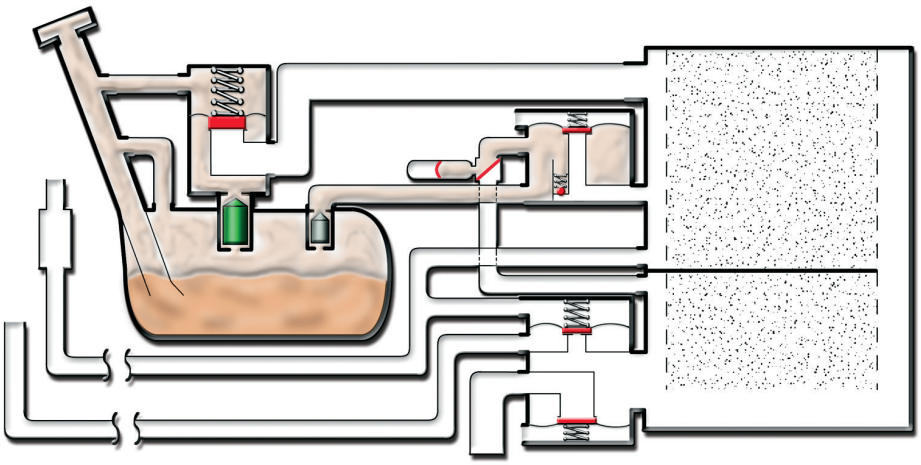

Fig. 5-10

TL874f510

P0441: Vapor Purge Flow Detection

The EVAP monitor is designed to detect:

- restricted vapor purge flow when the purge VSV is open
- inappropriate vapor purge flow when the purge VSV is closed
- under normal purge conditions, pressure pulsations generated by the cycling of the purge VSV are present in the canister and detected by the VP sensor

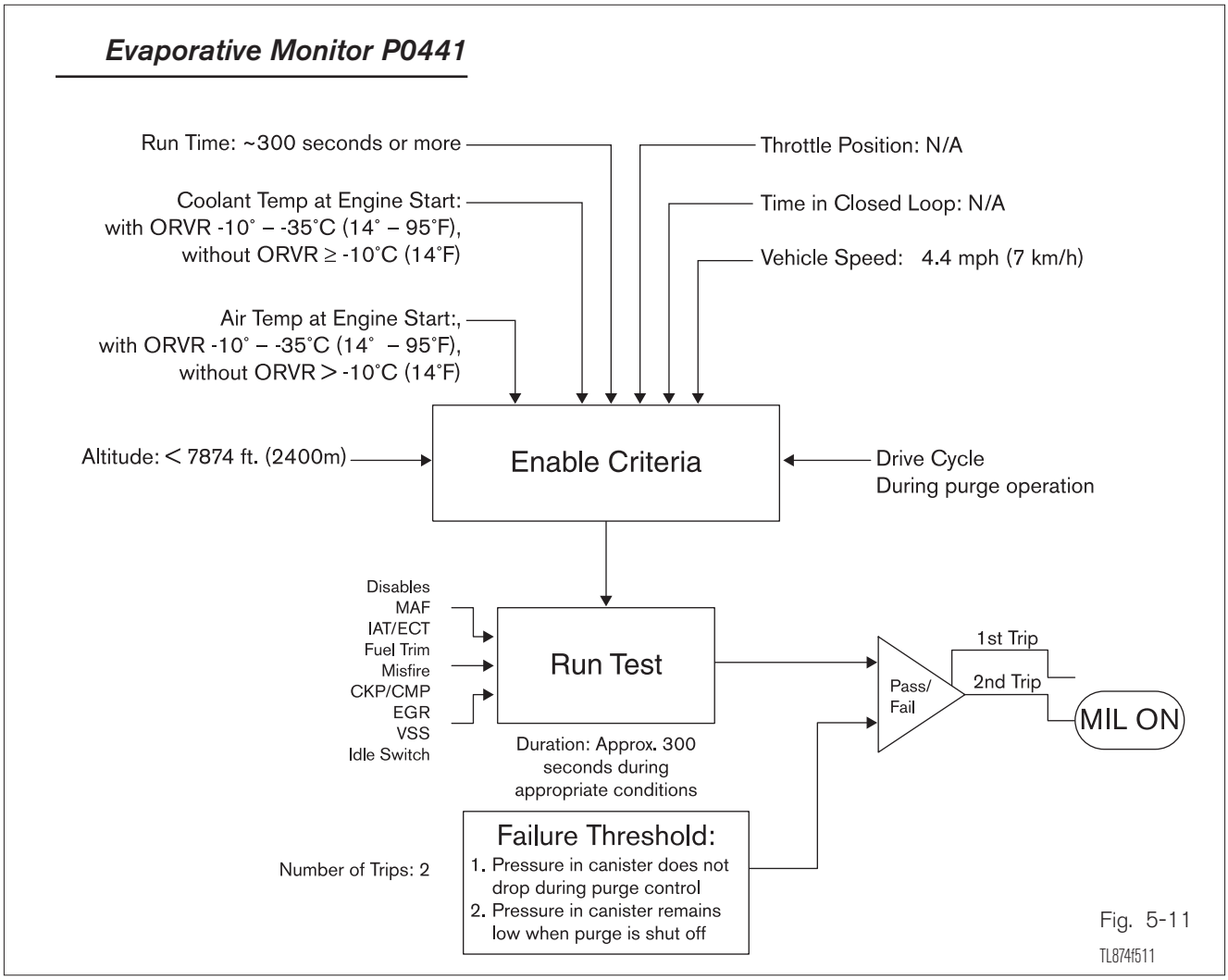

Fig. 5-11

Restricted Vapor Purge Flow

During purging under normal conditions, pressure pulsations are generated by the cycling of the purge VSV and canister pressure drops. If the VP sensor does NOT detect these pulsations and pressure drop in the canister, the ECM determines the EVAP system is not working. Possible causes are, the purge VSV is stuck closed, a restricted purge line, a hole or disconnected purge line.

Inappropriate Vapor Purge Flow

If during starting the canister internal pressure is at atmospheric pressure, and immediately after starting the canister internal pressure drops to nearly intake manifold pressure (vacuum), the purge VSV is open when it should be closed.

Both vapor purge flow conditions set DTC P0441 and the technician must diagnose the system to find which condition is present.

NOTE

DTC P0441 may indicate a leak. If the VP sensor does NOT detect a pressure drop when the purge control is turned on, a leak may be a possible cause; for example, a disconnected purge hose.

Early Type EVAP Vapor Purge Flow Detection

If a purge flow problem is suspected, check the shaded areas. The purge VSV should also be checked.

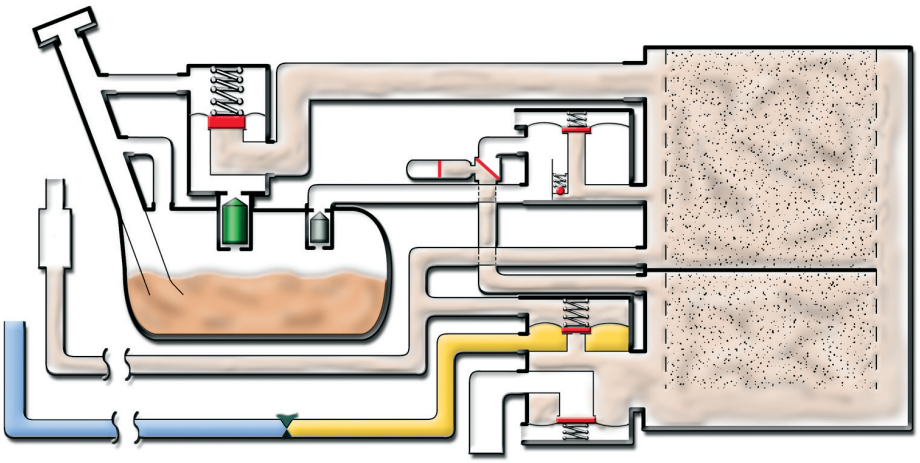

Fig. 5-12

TL874f512

P0446: Three-Way VSV

If DTC P0446 is present, a leak present on the canister purge side may set this code.

NOTE This code can also be set by a malfunctioning three-way VSV. If there is atmospheric pressure in the canister after the purge VSV is shut off, the ECM concludes there is a problem with the system.

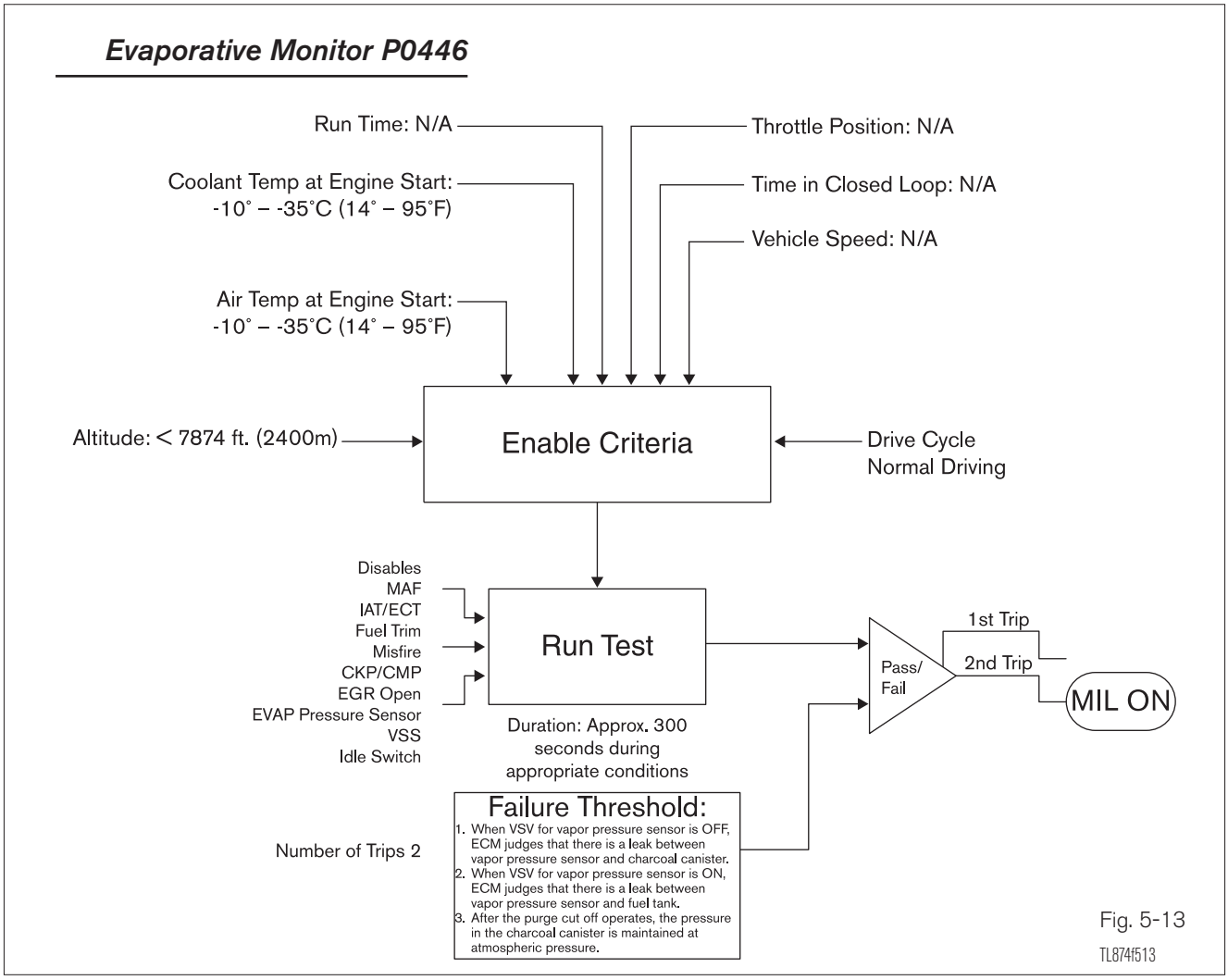

Fig. 5-13

Early Type EVAP Canister Leak Detection

If a leak is suspected in the canister, check the shaded areas.

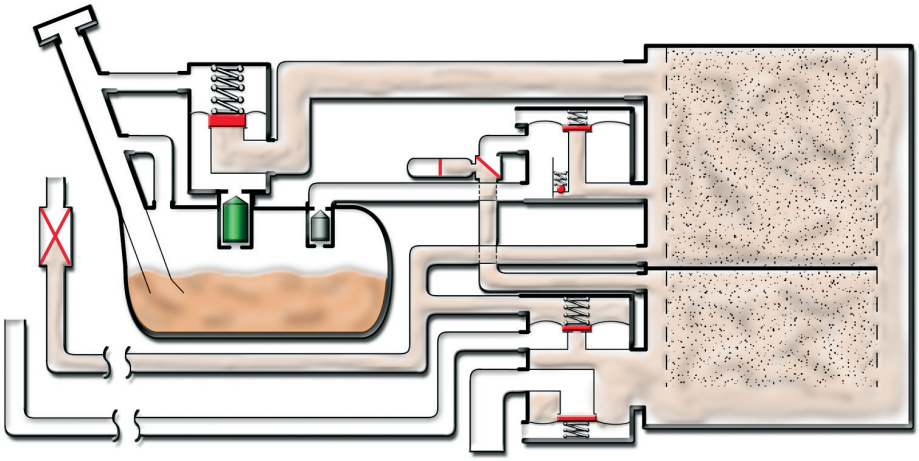

Fig. 5-14
TL874f514

The three-way VSV is connected to the VP sensor, canister, and fuel tank. This VSV allows the VP sensor to detect either canister or tank pressure.

There are two modes the ECM can use to determine if the three-way VSV is malfunctioning. The three-way VSV is judged to be normal if there is pressure difference between the tank and canister when the three-way VSV is switched.

If there isn't any pressure difference between the tank and canister, the ECM looks for the following conditions:

During purging, if pressure pulsations generated by the purge VSV are not present in the canister as detected by the VP sensor, the three-way VSV is judged to be defective.

If there are pressure pulsations detected by the VP sensor present in the fuel tank, the three-way VSV is judged to be defective.

The logic is that during purging, the VP sensor is supposed to be monitoring pressure pulsations in the canister. Because the VP sensor did not see pulsations in the canister but, in the tank during purging, the ECM concludes the three-way VSV did not switch.

Summary of Early Type Evaporative System DTC(s)

P0440: Evaporative Emission Control System Malfunction

The fuel tank pressure is atmospheric pressure after the vehicle is driven for 20 minutes. (two trip detection logic)

P0441: Evaporative Emission Control System Incorrect Purge Flow

The pressure in the charcoal canister does not drop during purge control. (two trip detection logic)

During purge cut-off, the pressure in the charcoal canister is very low compared with atmospheric pressure. (two trip detection logic)

P0446: Evaporative Emission Control System Vent Control Malfunction

When VSV for vapor pressure sensor is OFF, the ECM judges that there is a leak between the vapor pressure sensor and charcoal canister. (two trip detection logic)

When VSV for vapor pressure sensor is ON, ECM judges that there is a leak between the pressure sensor and fuel tank. (two trip detection logic)

After the purge cut off operates, the pressure in the charcoal canister is maintained at atmospheric pressure. (two trip detection logic)

NOTE

When diagnosing a P0446 DTC, check the Freeze Frame data. If the DTC sets at 0 mph, check for a hole in the canister. If a vehicle speed is recorded, check the 3-way VSV.

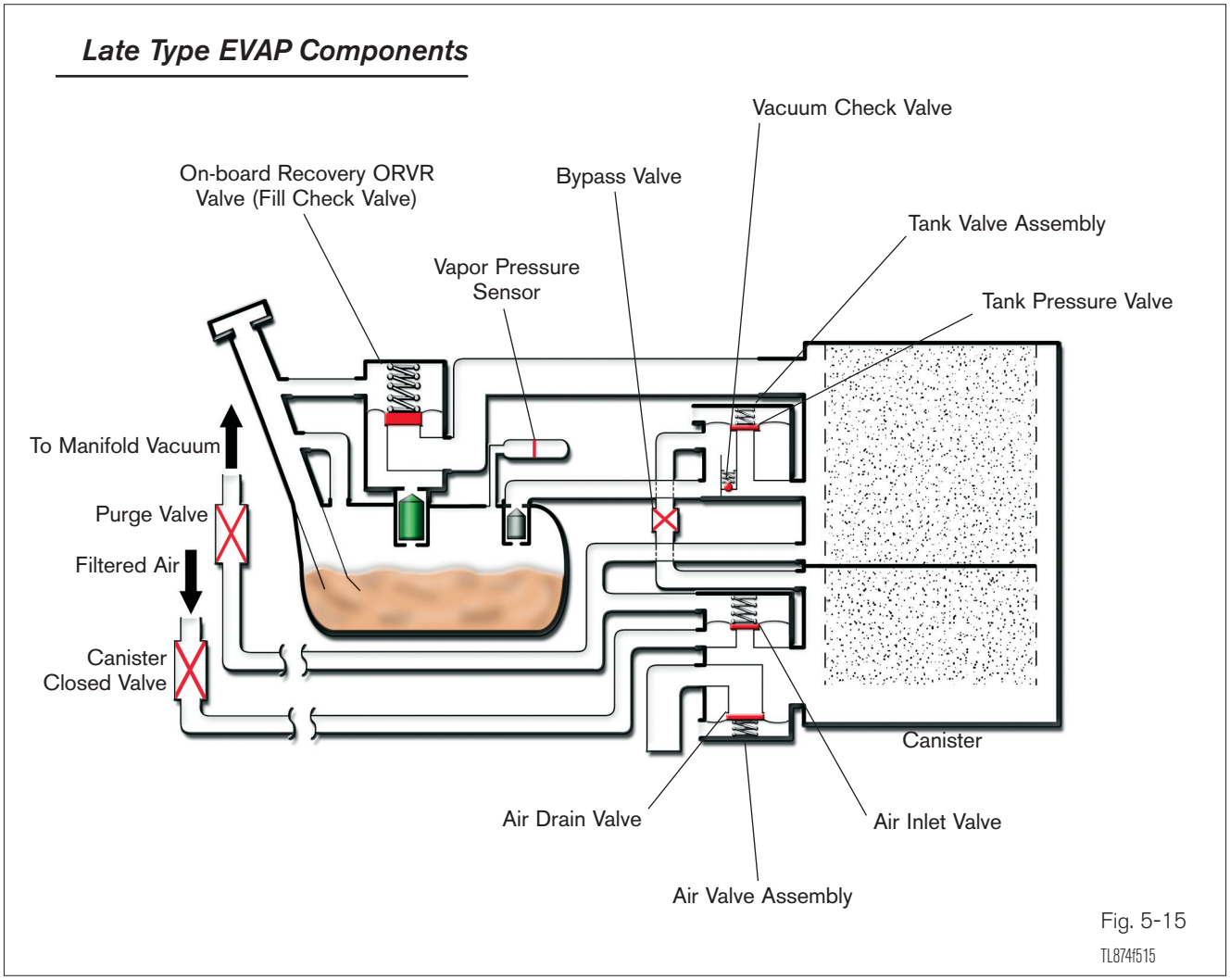

Fig. 5-15

Late Type (Intrusive) Monitor System

The late type, also known as intrusive type, was developed to meet the very stringent, mandated standard of detecting a hole 5mm (0.020″). This system uses many of the same components as the early type. Purge, vacuum relief, pressure relief, and ORVR operations are identical to the early type. However, the following items have been changed:

The vapor pressure sensor is connected to the tank and is not switched to the canister.

The three-way VSV has been replaced with a bypass VSV which connects the canister and tank during monitor operation.

A closed canister valve (CCV) has been added on the air inlet line allowing the system to be sealed.

The monitoring for leak detection is different. This system applies a very small vacuum to the EVAP system. The ECM determines if there is a problem in the system based on the vapor pressure sensor signal. All EVAP DTCs require two trips.

The following is a general overview of this monitoring system operation:

- The monitor sequence begins with a cold engine start. The IAT and ECT sensors must have approximately the same temperature reading.
- The ECM is constantly monitoring fuel tank pressure. As the temperature of the fuel increases, pressure slowly rises.
- The ECM will purge the charcoal canister at the appropriate time. With the bypass VSV closed, pressure will continue to rise in fuel tank.

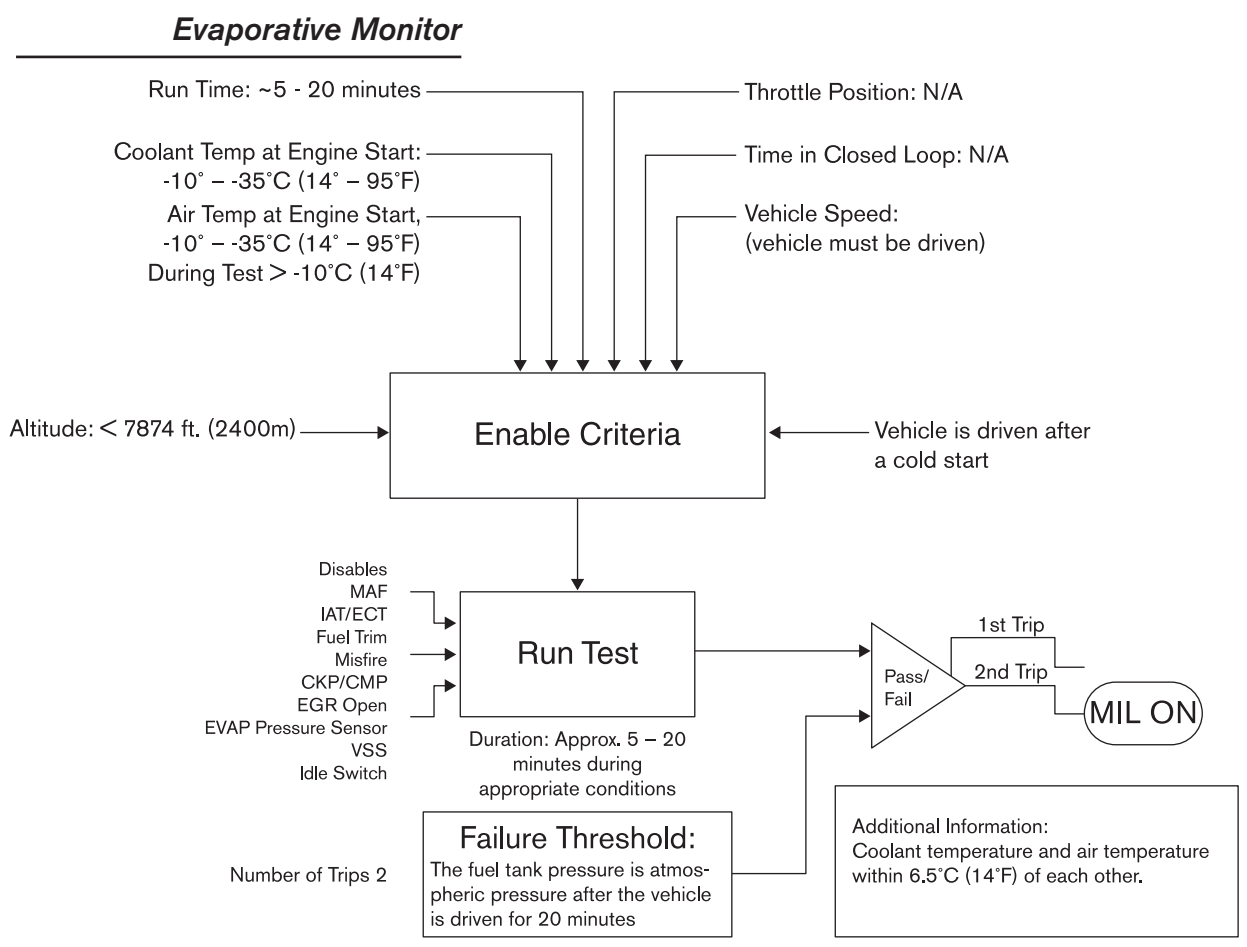

Fig. 5-16

Late Type EVAP Monitor Beginning Stages

After a period of driving, 5-20 minutes, the ECM cycles the purge VSV.

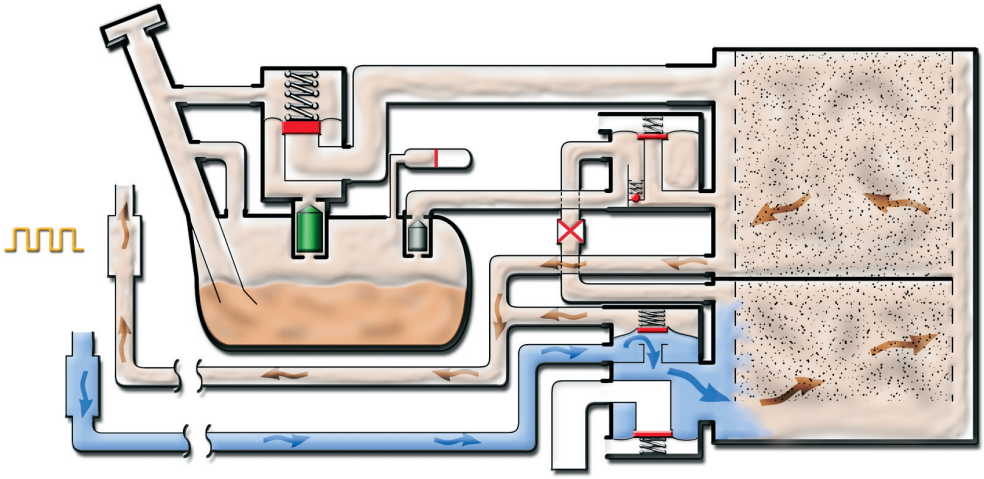

Next, the ECM will close the CCV and open the bypass VSV while continuing to operate the purge VSV. This will lower the pressure in the EVAP system.

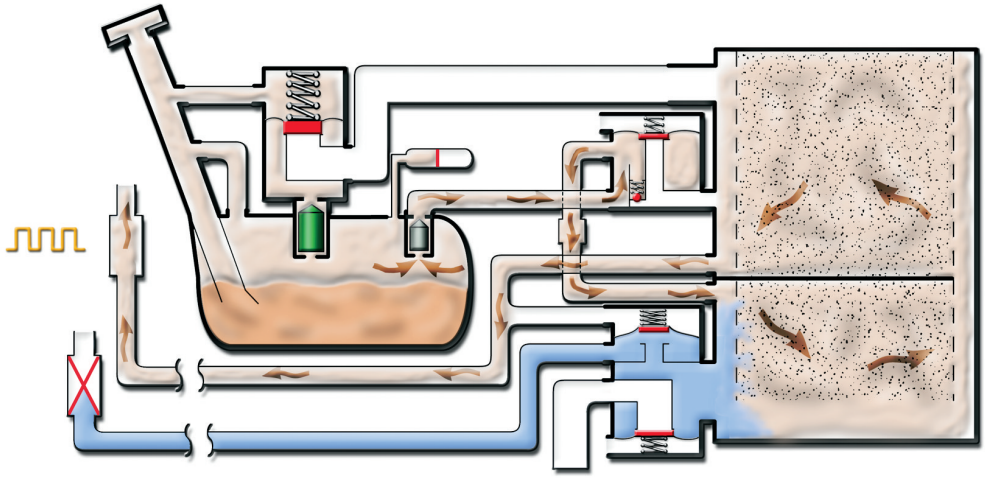

When the pressure reaches a predetermined point, the purge VSV is turned off and the valve is closed. At this point the ECM will begin to monitor for a leak by measuring the rate of pressure increase.

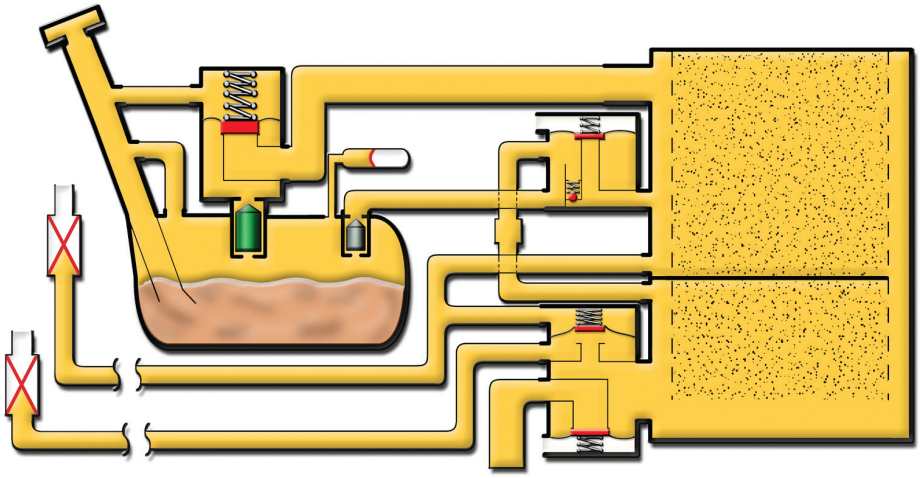

Fig. 5-17

TL874f517

P0441: Purge VSV Operation

At a predetermined point, the ECM closes the CCV and opens the bypass VSV causing a pressure drop in the entire EVAP system.

The ECM continues to operate the purge valve until the pressure is lowered to a specified point at which time the ECM closes the purge valve.

If the pressure did not drop, or if the drop in pressure decreased beyond the specified limit, the ECM judges the purge VSV and related components to be faulty.

P0440 & P0442: HC Leak Detection

The rate of pressure increase, as detected by the vapor pressure signal, indicates if there is a leak and if it is a large or small leak.

After purge valve operation, the purge VSV is turned off sealing the vacuum in the system and the ECM begins to monitor the pressure increase. Some increase in pressure is normal. A very rapid, sharp increase in pressure indicates a leak in the EVAP system and sets the DTC P0440.

This monitoring method is also able to distinguish what is called the small leak detection. A pressure rise just above normal indicates a very small hole.

CCV Operation

The CCV is commanded open by the ECM. The vapor pressure sensor will measure a rapid pressure increase.

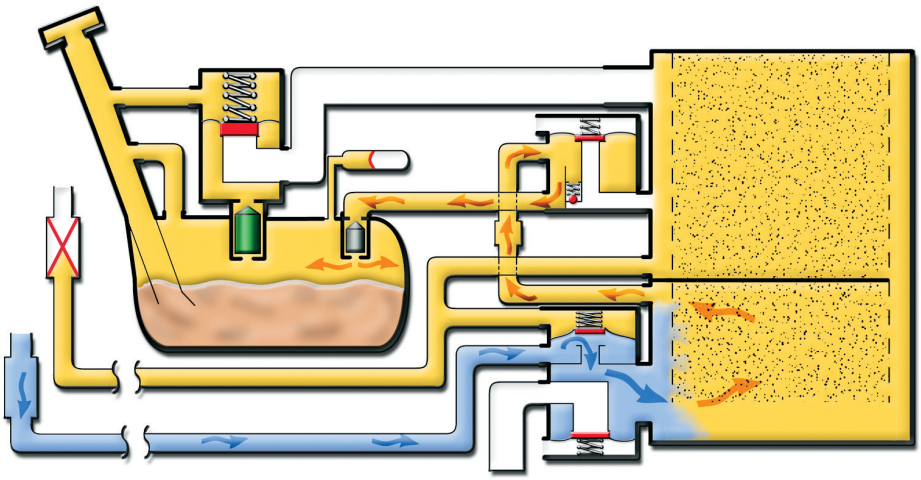

Fig. 5-18

TL874f518

P0446: Vent Control, CCV Operation and Bypass VSV Operation

This stage checks the CCV and vent (air inlet side) operation. When the vapor pressure rises to a specified point, the ECM opens the CCV. Pressure will increase rapidly because of the air allowed into the system. No increase or an increase below specified rate of pressure increase indicates a restriction on the air inlet side.

In the next stage, the ECM closes the bypass VSV. This action blocks air entering the tank side of the system. The pressure rise is no longer as great. If there was no change in pressure, the ECM will conclude the bypass VSV did not close.

Late Type (Intrusive) EVAP Monitor Sequence

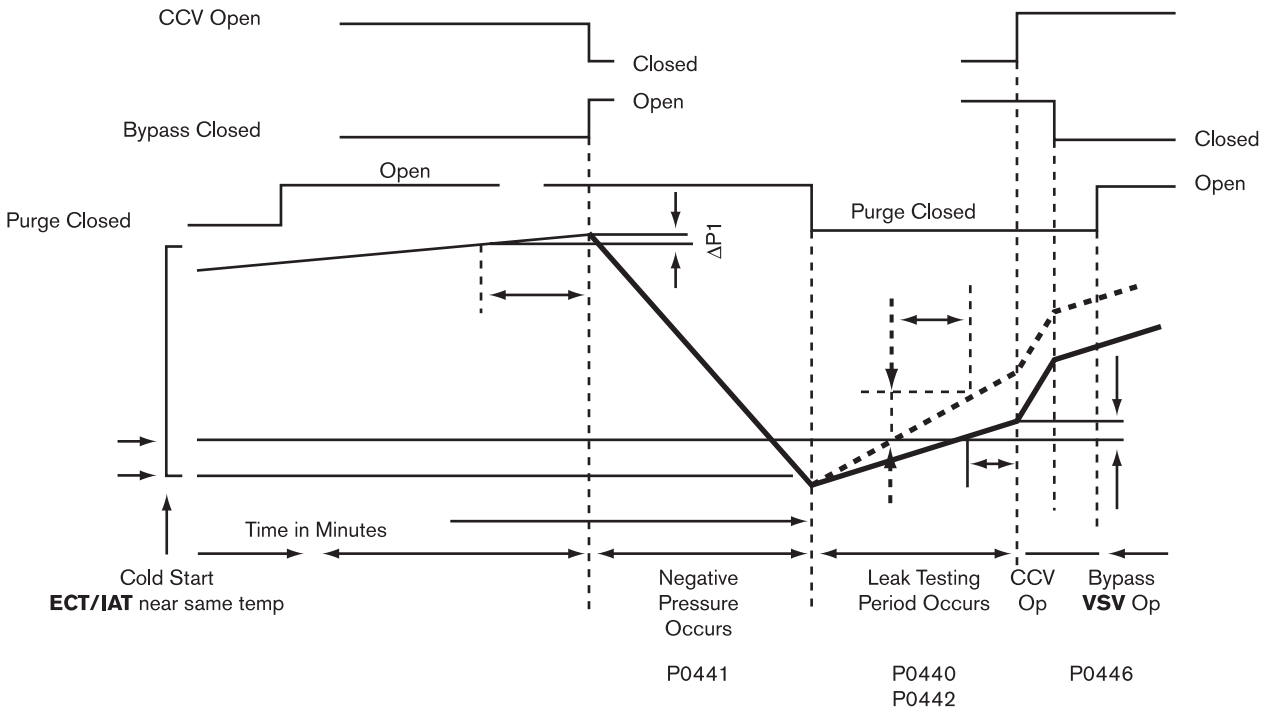

Fig. 5-19

TL874f519

P0450 & P0451: VP Sensor

These two DTCs indicate a faulty VP sensor or circuit on Early and Late type EVAP systems. These DTCs are not set instantly, for the ECM measures VP sensor signal under a variety of conditions and may require the EVAP monitor to complete. Both DTCs require two trips.

To set DTC P0450, after starting, the ECM monitors the VP sensor for 10 seconds. If the VP sensor measures over 4.5V or under 0.5V for at least 7 seconds of the 10 seconds after starting in both the canister and tank, the VP sensor is judged to have failed.

For DTC P0451, after 10 seconds, the voltage criteria is 4.9V and 0.10V. If the VP sensor exceeds these specifications for over 7 seconds, the VP sensor is judged as faulty. Within a 10 seconds period, between 5 to 15 seconds after stopping the vehicle, the tank pressure is monitored. If the VP sensor output fluctuates beyond the programmed specifications, the VP sensor is judged to have failed. For example, 3.83V (+5 mmHg) and 2.77V (-5 mmHg) have occurred more than 7 times within the 10 seconds period.

Vapor Pressure Sensor Circuit

Though there are different styles of vapor pressure sensors, they use the same style circuit.

The Vapor Pressure Sensor (VPS) measures the vapor pressure in the evaporative emission control system. The vapor pressure sensor may be located on the fuel tank, near the charcoal canister assembly or in a remote location.

Vapor Pressure Sensor Operation

The pressure inside the reference chamber changes with atmospheric pressure. The reference chamber pressure uses a small flexible diaphragm exposed to atmospheric pressure. This causes the reference pressure to increase with an increase in atmospheric pressure. Using this method allows the vapor pressure reading to be calibrated with atmospheric pressure.

The VPS is extremely sensitive to changes in pressure.

1.0 psi = 51.7 mmHg

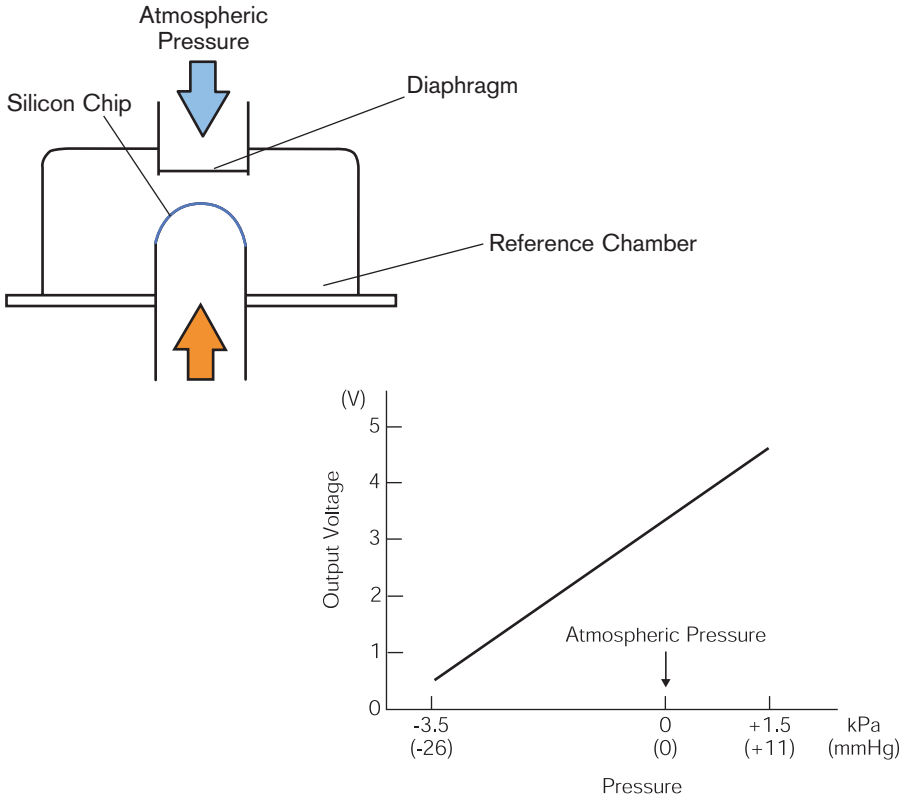

Fig. 5-20

TL874f520

This sensor uses a silicon chip with a calibrated reference pressure on one side of the chip. The other side of the chip is exposed to vapor pressure. Changes in vapor pressure cause the chip to flex and vary the voltage signal to the ECM. The voltage signal out depends on the difference between atmospheric pressure and vapor pressure. As vapor pressure increases, the voltage signal increases. This sensor is sensitive to very small pressure changes (1.0 psi = 51.7 mmHg).

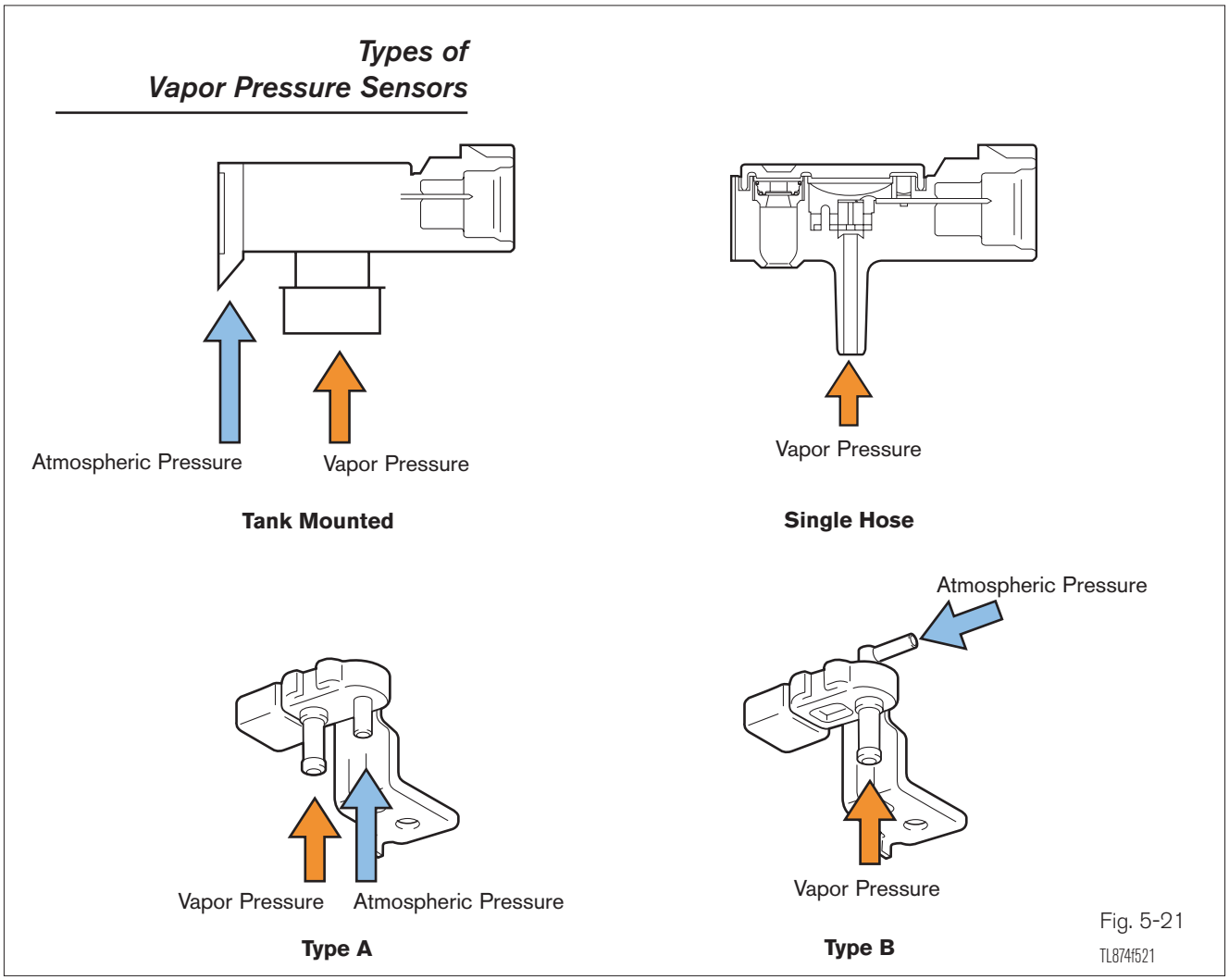

Fig. 5-21

Vapor Pressure Sensors come in a variety of configurations. When the VPS is mounted directly on the fuel pump assembly, no hoses are required. For remote locations, there may be one or two hoses connected to the VPS. If the VPS uses one hose, the hose is connected to vapor pressure. In the two hose configuration, one hose is connected to vapor pressure, the other hose to atmospheric pressure. It is important that these hoses are connected to the proper port. If they are reversed, DTCs will set.

VPS Electrical Circuit

The ECM receives this voltage signal at the PTNK terminal. This sensor receives 5 volts from the ECM on the VC line. The ground for the sensor is through a ground wire to the ECM (usually terminal E2).

The PTNK signal will be 5 volts if the PTNK wire is disconnected.

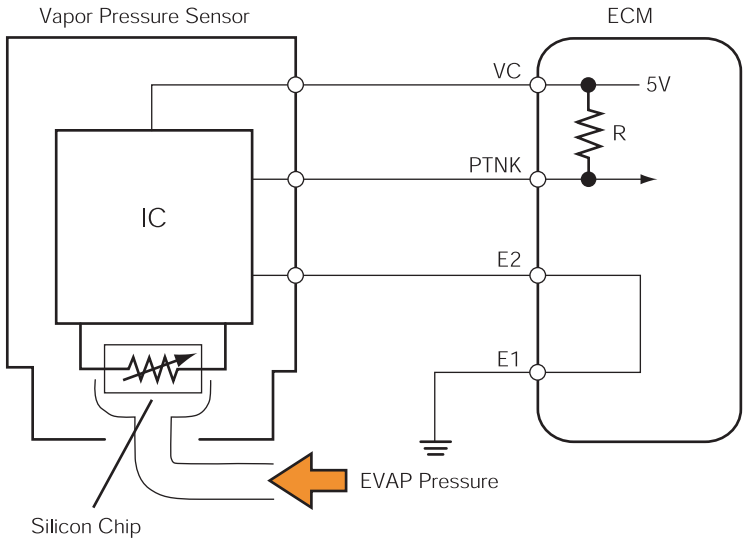

Fig. 5-22

TL8741502

VPS Diagnosis

Check all hoses for proper connection, restrictions, and leaks. Check the VC and E2 voltages. Apply the specified pressure and read sensor voltage output. The vapor pressure sensor is calibrated for the pressures found in the EVAP system, so apply only the specified amount to prevent damaging the sensor.

NOTE

Check the Freeze Frame data. Typically, when ENGINE RUN TIME is less than 200 seconds, carefully check the Vapor Pressure Sensor.

***P0450** Evaporative Emission Control System Pressure Sensor Malfunction*

ENABLING STRATEGY	DETECTING CONDITION	TRIP(S)	ECM STRATEGY
Up to 10 sec. after engine has started	Vapor Pressure Sensor > -3.5kPa (-26 mmHg, -1.0 in. Hg) for 7 sec. or more OR Vapor Pressure Sensor ≥ 2.0kPa (15 mmHg, 0.6 in. Hg) for 7 sec. or more	2	

***P0451** Evaporative Emission Control System Pressure Sensor Range Performance*

ENABLING STRATEGY	DETECTING CONDITION	TRIP(S)	ECM STRATEGY
Vehicle Speed 0 mph (0 km/h) Engine Speed Idling VSV for Vapor Pressure Sensor is ON	Vapor Pressure Sensor output changes extremely	2	
10 sec. or more after the engine has started	Vapor Pressure Sensor > -4.0kPa (-30 mmHg, -1.2 in. Hg) for 7 sec. or more OR Vapor Pressure Sensor ≥ 2.0kPa (15 mmHg, 0.6 in. Hg) for 7 sec. or more	2	

EVAP Diagnostic Tools and Procedures

The common tools for diagnosis are the Diagnostic Tester and Pressure tool. Procedures will vary with application. The worksheet attached to this section will provide you with a general procedure.

The nature of the EVAP system makes it difficult to confirm the repair. Please refer to the Readiness Confirmation Test.

It is recommended that during a visual inspection, do not wiggle hoses or tighten fittings and caps until the system has been pressurized.

NOTE When the Intrusive EVAP system is pressurized through the service port, the EVAP system is pressurized EXCEPT for the fresh air intake line between the CCV and canister. The CCV and intake line must be pressurized separately to check for a leak.

Notes

WORKSHEET 5-1
EVAP Leak Test Confirmation - Intrusive Test

Vehicle	Year/Prod. Date	Engine	Transmission

Worksheet Objectives

This worksheet will guide you in testing and confirming if there is a leak in the Intrusive EVAP system. It will also show you how to isolate the canister side from the tank side.

Tools and Equipment

- Vehicle
- Vehicle Repair Manual, EWD, & NCF
- Diagnostic Tester
- Hand Tools, Fender Covers, Floor Mats, and Shop Towels
- DVOM
- Test leads

Section 1: Setup and Test

1. On a vehicle selected by the instructor, connect the Diagnostic Tester to the vehicle.

2. DIAGNOSTIC TESTER SETUP: Go to setup menu on the tester and select UNIT CONVERSION.

3. Under VAPOR PRESSURE, select ABS for absolute pressure, and mmHg for millimeters of mercury. This is to match RM specs.

4. Go back to FUNCTION SELECT and select ENHANCED OBD II.

5. Turn the ignition key to ON.

6. Using a test lead, ground the Closed Canister Valve (CCV) at the ECM and listen for a clicking sound at the CCV.

   Did the CCV "click"? _____

   DO NOT REMOVE the test lead.

7. Using a test lead, ground the Bypass (Pressure Switching Valve) VSV (TBP) at the ECM and listen for a clicking sound at Bypass VSV.

   Did the Bypass VSV "click"? _____

   DO NOT REMOVE the test lead.

8. What will grounding the CCV and Bypass VSV do to these valves and what does it verify?

   _____

   _____

9. Connect the + lead of a DVOM to the Vapor Pressure Sensor pin at the ECM, the - lead to ground E2.

10. Start the engine, activate the EVAP (Purge) VSV. Observe the vapor pressure reading and DVOM. Pressure should drop to approximately 740mmHg or 1.2 volts (this will vary with altitude and condition of system). Turn OFF or disconnect EVAP (Purge) VSV.

11. Observe the Vapor Pressure Sensor and DVOM. How long should the EVAP system maintain a vacuum?

    _____

12. What is the condition of the system?

    _____

13. Create a small leak by opening the gas cap, or at another point as directed by the instructor. Observe DT and DVOM.

14. What happened to the DT Vapor Pressure Sensor reading and DVOM readings? Which reacted faster?

    _____

15. Is the vacuum test more useful for locating a leak or verifying a leak exists?

    _____

16. What DTC(s) are likely to be reported if there is a leak?

    _____

17. Restore vehicle to normal condition.

EVAP Leak Test Confirmation - Intrusive Test

Name: _____ Date: _____

Review this sheet as you are doing the worksheet. Check each category after completing the worksheet and instructor presentation. Ask the instructor if you have questions. The comments section is for you to write where to find the information, questions, etc.

Topic	*I have questions*	*I know I can*	Comment
Locate components using the EWD and RM			
Find wire colors, pin numbers using the EWD and RM			
Set the conditions for the test			
Determine if the EVAP system is leaking			

Notes

WORKSHEET 5-2
EVAP System Test - Intrusive Type

Vehicle	Year/Prod. Date	Engine	Transmission

Worksheet Objectives

In this worksheet, you will use the Diagnostic Tester and EVAP Pressure Tester (Miller) to test system integrity and determine the condition of the EVAP system and components. When finished, you will know how to diagnose the EVAP system and components.

Tools and Equipment

- Repair Manual
- Vehicle EWD
- EVAP Pressure Tester
- Diagnostic Tester
- DVOM
- Hand Tool Set

Note: Fuel Level should be 1/4 to 3/4 of the tank.

SECTION 1: DIAGNOSTIC TESTER SETUP

1. Go to setup menu on the Diagnostic Tester and select UNIT CONVERSION.

2. Under VAPOR PRESSURE, select ABS for absolute pressure, and mmHg for millimeters of mercury. This is to match RM specs.

3. Go back to FUNCTION SELECT and select ENHANCED OBD II.

SECTION 2: EVAP SYSTEM

1. Setup the Diagnostic Tester as outlined above.

2. With the **key on and engine off**, record Tank Vapor Pressure reading _____mmHg. What does a reading above or below atmospheric pressure **(762 mmHg)** indicate?

_____

Note: DO NOT TIGHTEN or REMOVE the FUEL CAP!

Test EVAP Purge Line/Check Purge VSV

This procedure tests for purge flow restrictions, and checks the purge VSV and EVAP purge line connections. This is done to confirm the operation of these components.

1. Connect EVAP System Pressure Pump to EVAP service port.
   - Set pump hold switch to CLOSE.
   - Set vent switch to CLOSE.

2. Using the Diagnostic Tester, go to ACTIVE TEST, EVAP (Purge) VSV test.

3. Start the engine. With engine warm @ idle, activate EVAP VSV.

4. Pump gauge should read between - 9 mmHg to - 499 mmHg (-5" H2O to -268" H2O) with the needle fluctuating. Name two causes for the needle not to fluctuate.

   _____

   _____

5. What DTC(s) are possible if the Purge VSV does not operate correctly? (HINT: See monitor sequence)

   _____

6. From air cleaner side, temporarily plug the air inlet line. Pressure should decrease by -10mmHg (- 5" H2O) or more.

7. If pressure did not decrease, list two causes.

   _____

   _____

Note: When both gauge valves are in the CLOSE position, the pump cannot pressurize the system. The gauge measures the pressure in the EVAP system.

Pressurize System (System Integrity Check)

This test checks for leaks in the canister and fuel tank sides by pressurizing the system. When the system is pressurized, it allows you to locate the source of a leak. The CCV and Air Inlet Line are checked separately.

Procedure	Results
1. Clamp air drain hose with supplied hose pliers. ⇩	**Condition 1. Pump gauge and vapor pressure above atmospheric pressure.** This indicates:
2. Locate the Vapor Pressure Sensor. **If the sensor has two hoses connected to it**, disconnect the hose between the air drain and the sensor and plug the air drain hose. See Figure 1. ⇩	**2. Pump pressure gauge zero, vapor pressure above atmospheric pressure (above 762 mmHg).** This indicates:
3. Pressurize EVAP system. Turn off the pump and seal system (see pump directions). ⇩	**3. Pump pressure gauge is above atmospheric pressure (above zero), vapor pressure is at 762 mmHg.** This indicates:
4. Note pump pressure reading and Vapor Pressure Sensor reading. ⇩	**4. Pump pressure gauge at zero, vapor pressure is at 762 mmHg**. This indicates:
5. Compare your readings to one of the four results listed in the right column. Your vehicle had result number _____.	
6. Next, in the right column, list a probable reason or area that can cause each result.	

What DTC(s) are likely to set if there is a leak?

_____

After completing the steps above proceed to checking the CCV and air inlet line. This must be done because this section is not pressurized when the pump pressurizes the system through the service port.

Check CCV and Air Inlet Line

This test checks for leaks and restrictions between the canister and CCV; tests CCV operation.

1. Disconnect the air inlet line at the canister.

2. Connect pump to line.

3. Go to ACTIVE TEST, turn on the CCV.

4. Pressurize line, turn pump off. Pressure should hold. If not, check line and CCV.

5. Turn off the CCV, pressure should decrease.

6. Reconnect line.

7. What DTC(s) are possible if the CCV fails?

_____

Check Bypass (Pressure Switching Valve) VSV Operation

This tests the Bypass VSV for operation and restrictions.

1. Disconnect Bypass VSV lines from canister.

2. Connect pump to one Bypass VSV line.

3. Go to ACTIVE TEST BYPASS VSV.

4. Pressurize Bypass VSV, Turn Pump off.

5. Pressure should hold at this point. If not, what needs to be checked?

_____

6. Turn Bypass VSV on, pressure should drop. If not, what component should be checked first?

_____

7. Reconnect lines.

8. What DTC(s) are possible if the Bypass VSV fails?

_____

Return Vehicle to Service

1. After repairs, pressurize the EVAP system to be sure the system does not leak.

2. Remove clamp from air drain. Remove the plug and connect the Vapor Pressure Sensor hose.

3. Enable EVAP monitor according to Readiness Test Confirmation procedure.

Vapor Pressure Sensor with two hoses - preparation for leak testing

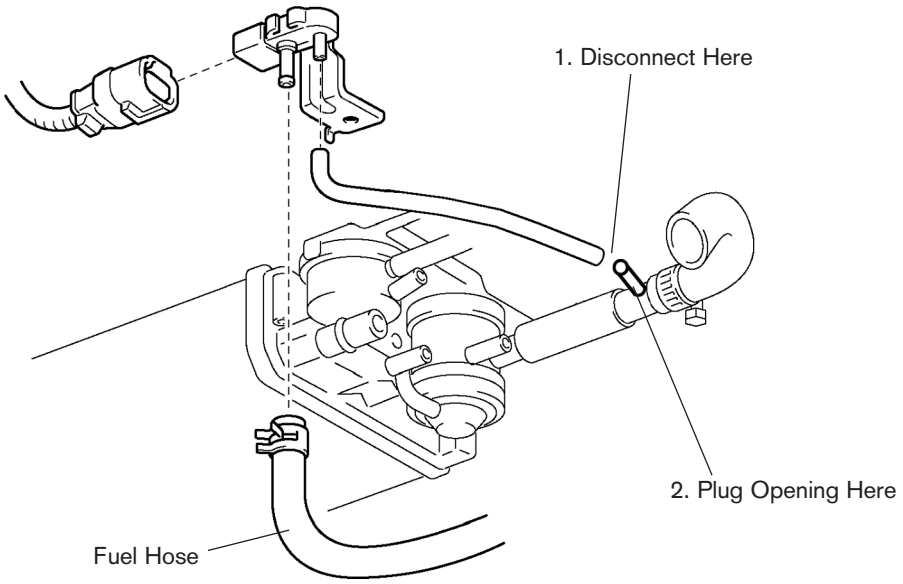

Figure 1

Areas to Check for Leaks

Canister Side

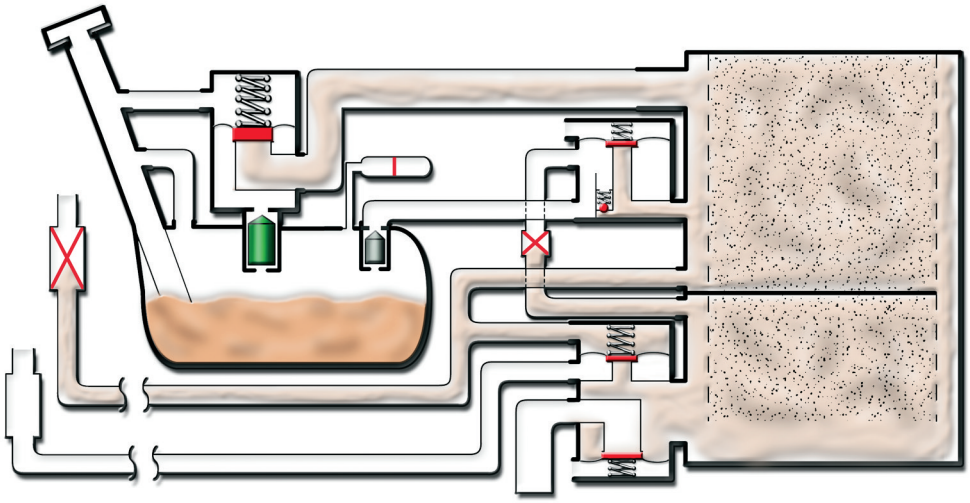

Figure 2

1. Check shaded areas for leaks (soapy water detection).

Tank Side

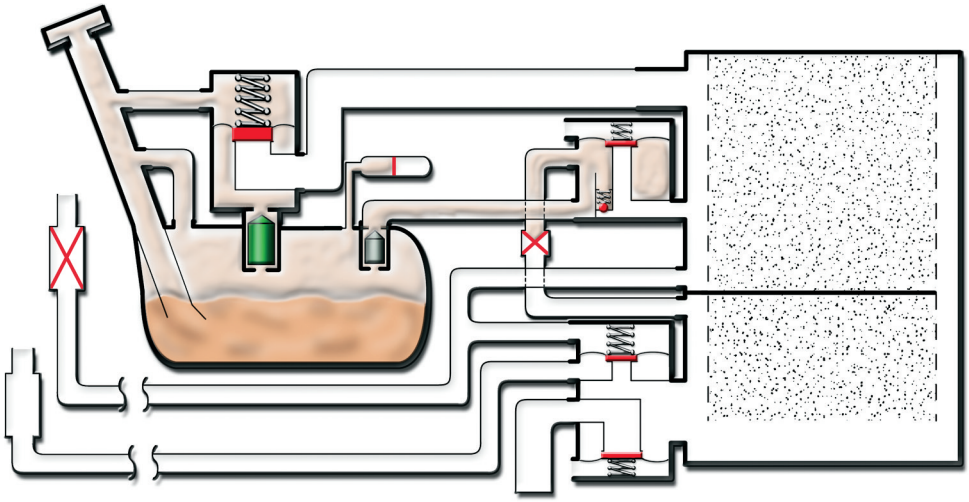

Figure 3

1. Disconnect the EVAP hose from the charcoal canister side and then pressurize the fuel tank to 30 mmHg (4 kPa/0.58psi).

2. Check that the internal pressure of the tank can hold for 1 minute. Check shaded areas for leaks (soapy water detection). If it does, check the canister side.

3. With system pressurized, check shaded areas for leaks (soapy water detection). Inspect fuel tank cap for leaks and if it is OEM.

EVAP System Test - Intrusive Type

Name: _____ Date: _____

Review this sheet as you are doing the worksheet. Check each category after completing the worksheet and instructor presentation. Ask the instructor if you have questions. The comments section is for you to write where to find the information, questions, etc.

Topic	*I have questions*	*I know I can*	Comment
Locate components using the EWD and RM			
Find wire colors, pin numbers using the EWD and RM			
Set the conditions for the test			
Determine if the EVAP system is leaking			
Set the conditions for the test and operate the EVAP pressure tester			
Determine if EVAP system purge operation is normal			
Locate the source of the leak and determine the cause			
Visually inspect tank, fuel cap, lines, canister			
Activate purge VSV with Active Test			
Test purge VSV and compare to specs. to determine condition			
Test Vapor Pressure Sensor			

Notes

WORKSHEET 5-3
EVAP System Test - Non-Intrusive Type

Vehicle	Year/Prod. Date	Engine	Transmission

Worksheet Objectives

In this worksheet, you will use the Diagnostic Tester and EVAP Pressure Tester (Miller) to test system integrity and determine the condition of the EVAP system and components.

Tools and Equipment

- Repair Manual
- Vehicle EWD
- EVAP Pressure Tester
- Diagnostic Tester
- DVOM
- Hand Tool Set

Note: Fuel Level should be 1/4 to 3/4 of the tank.

SECTION 1: DIAGNOSTIC TESTER SETUP

1. Go to setup menu on the Diagnostic Tester and select UNIT CONVERSION.

2. Under VAPOR PRESSURE, select ABS for absolute pressure, and mmHg for millimeters of mercury. This is to match RM specs.

3. Go back to FUNCTION SELECT and select ENHANCED OBD II.

SECTION 2: EVAP SYSTEM

The following procedures are designed to test the operation of the EVAP system with a service port.

1. Setup the Diagnostic Tester as outlined above.

2. With the key on and engine off, record Tank Vapor Pressure reading _____mmHg. What does a reading above or below atmospheric pressure indicate?

_____

Note: DO NOT TIGHTEN or REMOVE the FUEL CAP!

Test EVAP Purge Line/Check Purge VSV

This procedure tests for purge flow restrictions, and checks the purge VSV and EVAP purge line connections. This is done to confirm the operation of these components.

1. Connect EVAP System Pressure Pump to EVAP service port
   - Set pump hold switch to CLOSE
   - Set vent switch to CLOSE

2. Using the Diagnostic Tester, go to ACTIVE TEST, EVAP (Purge) VSV test

3. Start the engine. With engine warm @ idle, activate EVAP VSV

4. Pump gauge should read between - 9 mmHg to - 499 mmHg (-5" H2O to -268" H2O) with the needle fluctuating. Name two causes for the needle not to fluctuate.

   _____

   _____

5. What DTC(s) are possible if the Purge VSV does not operate correctly? (HINT: See monitor sequence)

   _____

6. From air cleaner side, temporarily plug the air inlet line. Pressure should decrease by -10mmHg (- 5" H2O) or more.

7. If pressure did not decrease, list two causes.

   _____

   _____

Note: When both gauge valves are in the CLOSE position, the pump cannot pressurize the system. The gauge measures the pressure in the EVAP system.

Pressurize System (System Integrity Check)

This test checks for leaks in the canister and fuel tank sides by pressurizing the system. When the system is pressurized, it allows you to locate the source of a leak.

Procedure	Results
1. Clamp air drain line with supplied hose pliers. ⇩	**Condition 1. Pump gauge and vapor pressure above atmospheric pressure.** This indicates:
2. Pressurize EVAP system. Turn off the pump and seal system (see pump directions). ⇩	**2. Pump pressure gauge zero, vapor pressure above atmospheric pressure (above 762 mmHg).** This indicates:
3. Note pump pressure reading and Vapor Pressure Sensor reading for the fuel tank. ⇩	**3. Pump pressure gauge is above atmospheric pressure (above zero), vapor pressure is at 762 mmHg.** This indicates:
4. Note pump pressure reading and Vapor Pressure Sensor reading. ⇩	**4. Pump pressure gauge at zero, vapor pressure is at 762 mmHg**. This indicates:
5. Compare your readings to one of the four results listed in the right column. Your vehicle had result number _____.	
6. Next, in the right column, list a probable reason or area that can cause each result.	

What DTC(s) are likely to set if there is a leak?

_____

Return Vehicle to Service

1. After repairs, pressurize the EVAP system to be sure the system does not leak.

2. Remove clamp from air drain. Remove the plug and connect the Vapor Pressure Sensor hose.

3. Enable EVAP monitor according to Readiness Test Confirmation procedure.

Areas to Check for Leaks

Canister Side

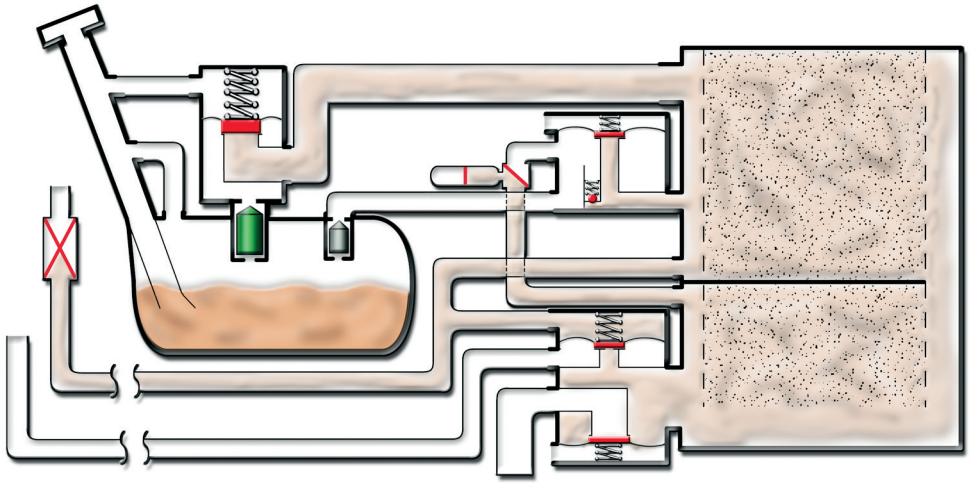

Figure 1

1. With the system pressurized, check shaded areas for leaks (soapy water detection).

Tank Side

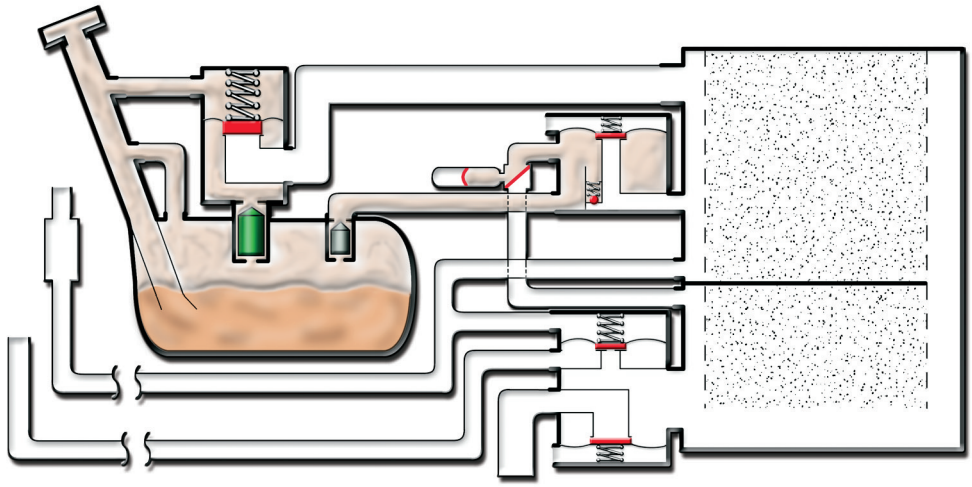

Figure 2

1. Inpect fuel tank cap for leaks and see if it is OEM.

2. Check shaded areas for leaks (soapy water detection).

EVAP System Test - Non-Intrusive Type

Name: _____ Date: _____

Review this sheet as you are doing the worksheet. Check each category after completing the worksheet and instructor presentation. Ask the instructor if you have questions. The comments section is for you to write where to find the information, questions, etc.

Topic	*I have questions*	*I know I can*	Comment
Locate components using the EWD and RM			
Find wire colors, pin numbers using the EWD and RM			
Set the conditions for the test			
Determine if the EVAP system is leaking			
Set the conditions for the test and operate the EVAP pressure tester			
Determine if EVAP system purge operation is normal			
Locate the source of the leak and determine the cause			
Visually inspect tank, fuel cap, lines, and canister			
Activate purge VSV with Active Test			
Test purge VSV and compare to specs. to determine condition			
Test Vapor Pressure Sensor			

Notes

Section 6

Fuel System Diagnosis

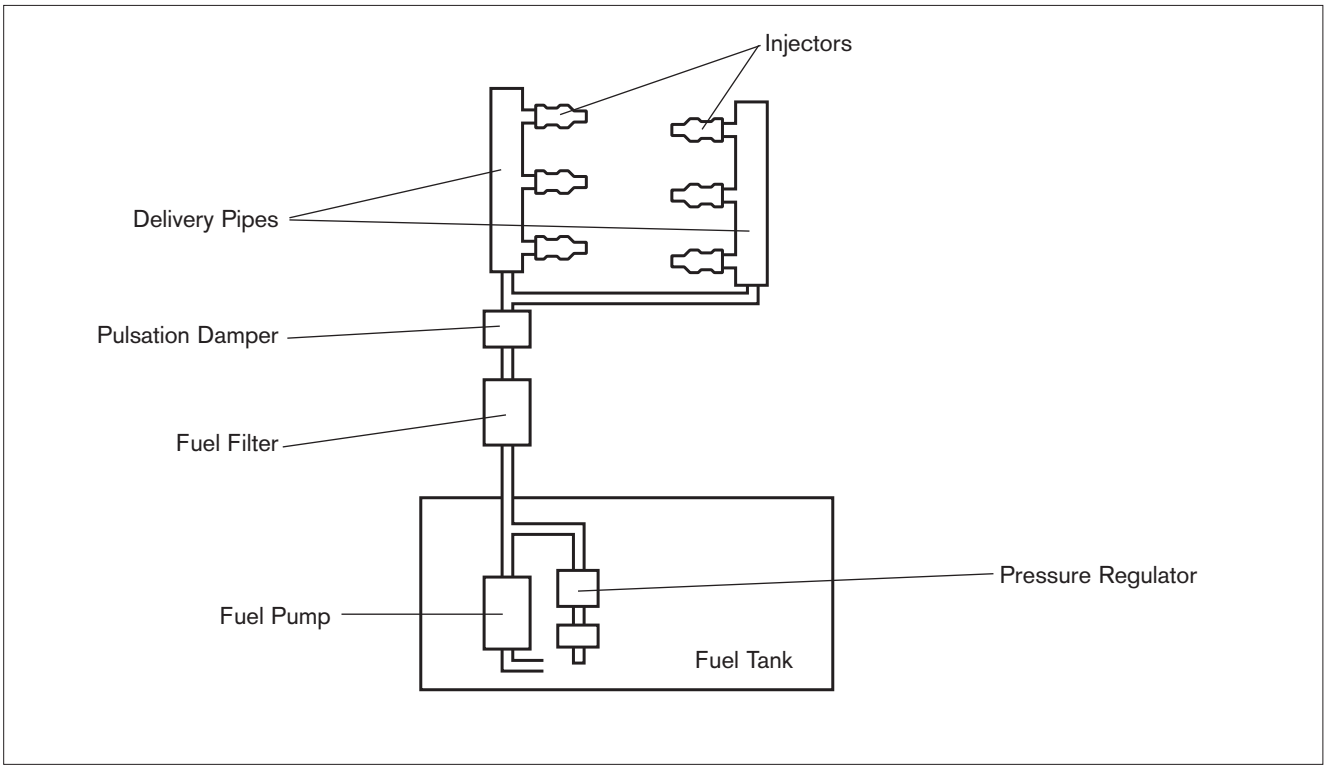

Learning Objectives:

1. Determine fuel system response and corrective actions.
2. Determine the causes of a rich fuel trim condition.
3. Determine the causes of a lean fuel trim condition.

Notes

Fuel System Diagnosis

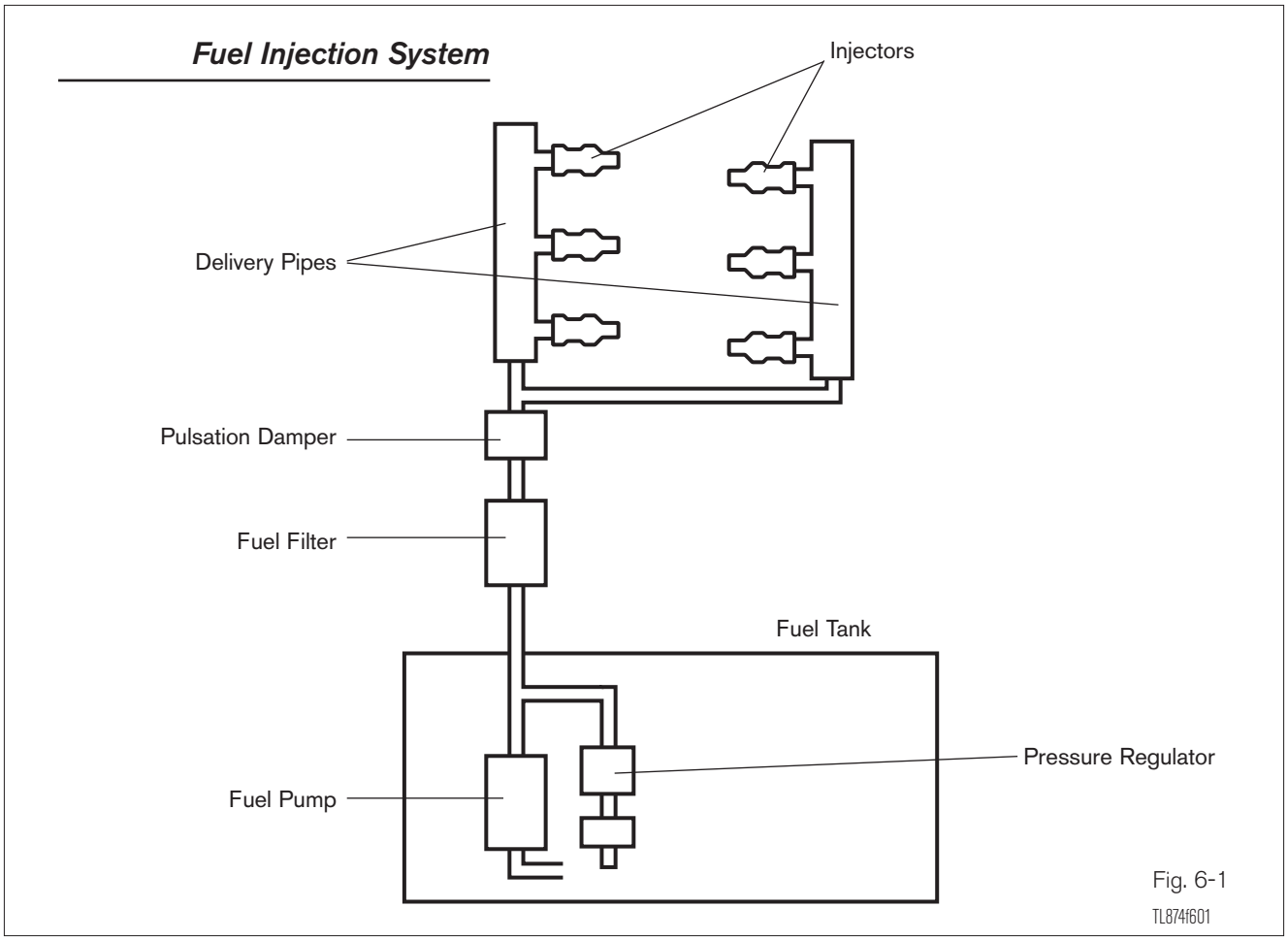

Fig. 6-1

Overview

The ECM adjusts the amount of fuel injected into the cylinder to meet a variety of operating conditions. The fuel system's purpose is to deliver and inject the proper amount of fuel at the correct time. The ECM can provide a limited correction for variances in the fuel system. The fuel system monitor reports the amount of the correction.

Fuel system problems are usually no fuel or an inadequate amount of fuel.

Fuel System Monitor

Fuel trim refers to the feedback compensation value compared against the basic injection time. Fuel trim includes short-term and long-term fuel trim. The ECM monitors its ability to control fuel trim.

The ECM fuel system monitor looks at the total or sum of both the short term and long term fuel trim to monitor its ability to control the A/F mixture. Should the ECM be forced to take both short term and long term fuel trim to the extreme rich or lean limit of control, a fault is recorded and a DTC will be set on the next trip if the condition is still present. The fuel trim monitor is a continuous monitor.

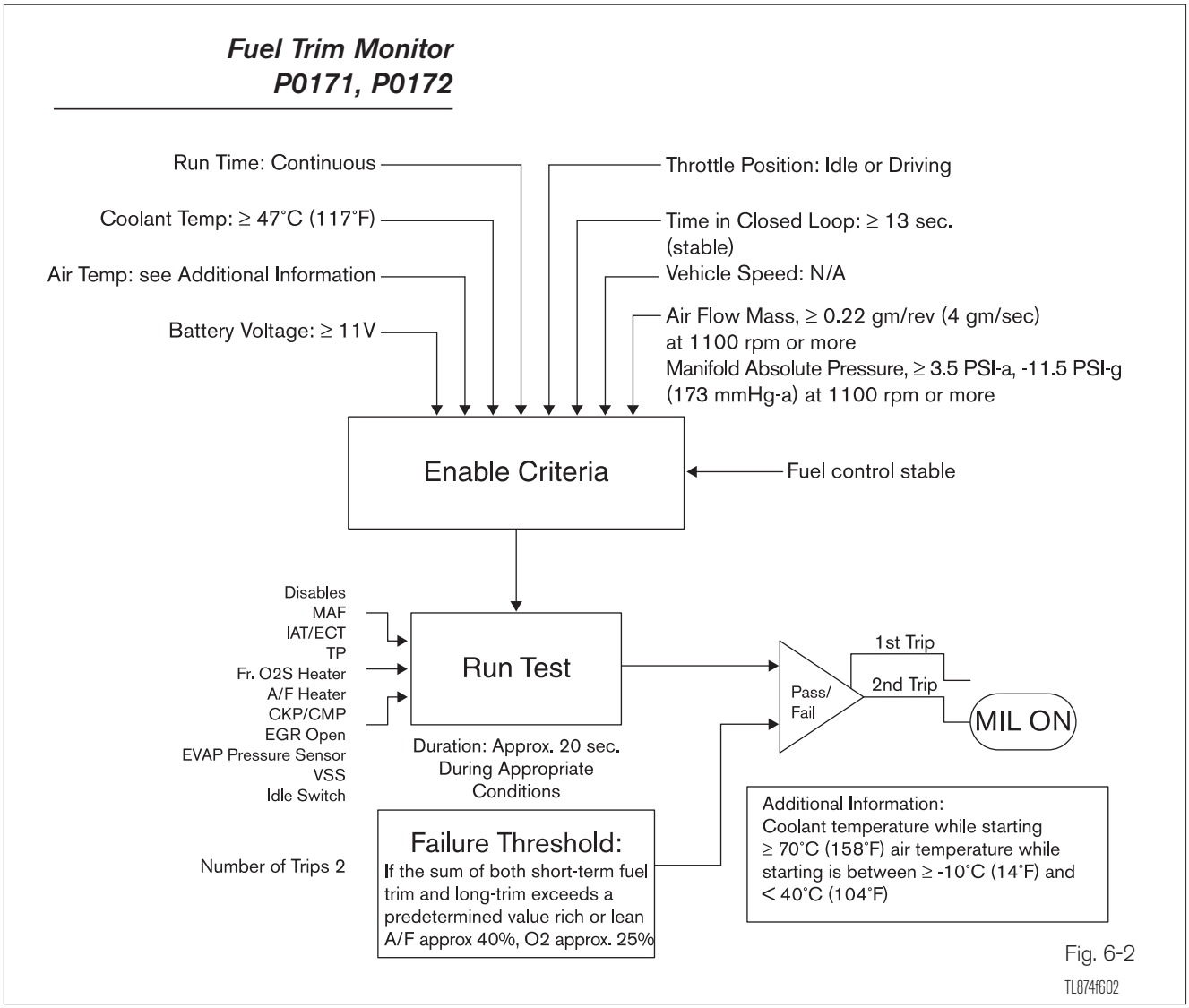

Fig. 6-2

Fuel Trim DTC(s)

P0171, P0174: System Too Lean When the A/F Ratio feedback is stable after the engine is at operating temperature and the fuel trim has reached its limit of correction to the rich side. (two trip logic)

P0172, P0175: System Too Rich When the A/F Ratio feedback is stable after the engine is at operating temperature and the fuel trim has reached its limit of correction to the lean side. (two trip logic)

Exhaust Oxygen Content		Fuel Trim Correction		If Correction Exceeds Failure Threshold
High	→	**Fuel Trim percentage increases (adds fuel)**	→	**P0171, P0174**
Low	→	**Fuel Trim percentage decreases (subtracts fuel)**	→	**P0172, P0175**

Feedback from the O2 or A/F sensor influences short-term fuel trim and short-term fuel trim influences long trim fuel trim. Short-term values are temporary and not stored when the ignition key is turned off. Long-term values are stored in memory because they are part of the basic injection duration. Long term values affect injection duration in closed and open loop because they are used to calculate basic injection duration. It is important to remember that the actual fuel trim will be the opposite of the DTC. A system too lean, DTC P0171 will mean the ECM is making a + or rich correction.

Fuel Trim

In this screen, P0171 was set when the Long Term Fuel Trim reached 35%.

```
TROUBLE CODE......... P0171
CALC LOAD............ 45%
MAP................ 46KPa-a
ENGINE SPD.......... 647rpm
COOLANT TEMP....... 197.6°F
INTAKE AIR.......... 77.0°F
CTP SW.................. ON
VEHICLE SPD........... 0MPH
SHORT FT #1........... 0.7%
LONG FT #1........... 35.8%
FUEL SYS #1............ CL
FUEL SYS #2......... UNUSED
FC IDL................ OFF
STARTER SIG........... OFF
A/C SIG............... OFF
PNP SW [NSW]......... OFF
ELECT LOAD SIG....... OFF
STOP LIGHT SW.......... ON
PS OIL PRESS SW...... OFF
PS SIGNAL............... ON
ENG RUN TIME........... 92
```

Fig. 6-3

TL874f603

Fuel System Checks

A fuel system monitor DTC does not mean the fuel system itself is at fault, but that there is a condition that is driving the fuel trim out of range. For example, excessively high fuel system pressure could cause the fuel trim to decrease beyond the parameter stored in the ECM. A misfiring cylinder may cause the fuel trim to go rich.

Checking Fuel Pressure

A pressure gauge is used to obtain accurate fuel pressure readings. If the pressure is too high, it is typically the fuel pressure regulator. If too low, the fuel hoses, fuel pump, filter and pressure regulator needs to be checked.

Residual fuel pressure is also checked. After the engine is shut off, there needs to be a residual pressure in the system. After the engine has been off for a period of time (usually five minutes), the pressure is checked. If pressure is not as specified, the fuel pump, connectors, hoses, regulator and injectors need to be checked.

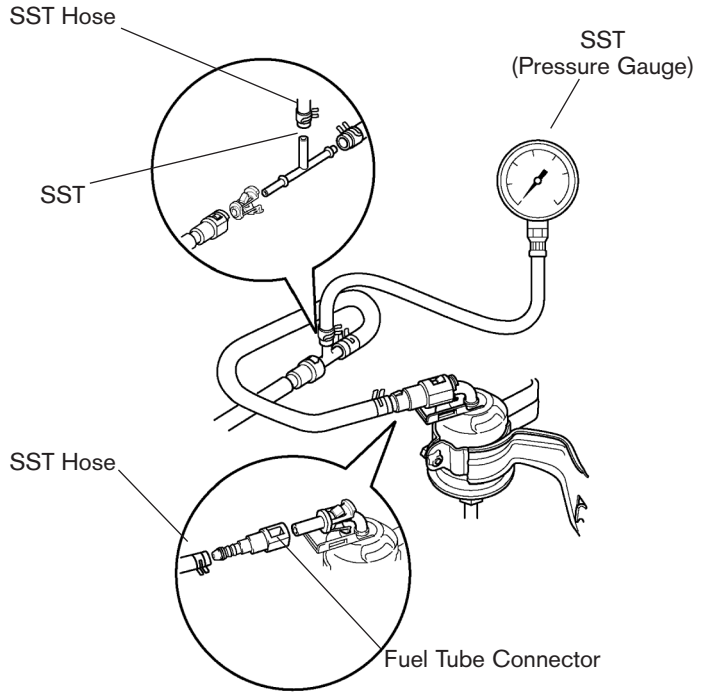

Fig. 6-4

TL874f604

Fuel Delivery System Inspection

Use a fuel pressure gauge or observe pulsation damper bolt head to confirm adequate pressure (see Course 852). Normal pressure confirms fuel pump operation and the electrical circuit between relay and pump.

Circuit Inspection Using V-BoB: Inspect the following signals for behavior as indicated above; STA, Fc (where applicable), +B, NE. Refer to the appropriate Repair Manual circuit inspection charts and to the Engine Control System schematic in the EWD for troubleshooting details.

Applicable Active Tests (OBD II only): Fuel Pump test, performed with ignition ON, will confirm circuit opening relay, all related wiring, and ECM control functions.

For NE signal inspection, use oscilloscope display.

Fuel Injector Drive System

When the engine is cranked, the injectors are pulsed by the ECM to supply the desired cranking A/F Ratio. Injection pulse width is based on inputs from the crankshaft speed sensor (NE), crankshaft position sensor [G], and engine coolant temperature (THW). The ECM also monitors the IGF signal for fuel injection Fail-Safe control in the event that adequate ignition is not maintained.

The ECM pulses the fuel injectors either simultaneously, in groups, or sequentially, depending on application and operating conditions. The injector driver circuits energize the injectors by providing a ground path for current flow.

Strategy

As the engine is cranked, the ECM looks for the STA signal, which indicates that the engine is cranking. Basic injection is calculated using the Engine Coolant Temperature (ECT) sensor as primary input.

Next the ECM looks for a crankshaft position signal to determine injector sequence and the crankshaft speed signal to determine pulse frequency.

Finally, the ECM compares the ignition confirmation (IGF) signal with the ignition trigger (IGT) signal to confirm that ignition events are taking place. If these signals are all present, the ECM will pulse the fuel injectors (#10, #20….#etc.) based on a starting enrichment program.

Inspection

Quick Checks:

- To determine if injector(s) are being pulsed, connect an injector test light (noid light) across an injector wire harness. A blinking light indicates normal driver circuit operation.
- Do not rely on an injection pulse signal from serial data stream for this test. During IGF fuel cut Fail-Safe, serial data may display an injection pulse even though the injector drivers are not operating. Repair any IGF problems before troubleshooting the injectors.
- To determine if fuel delivery is taking place – after cranking, remove a spark plug and check for fuel.
- Using Diagnostic Tester serial data, observe the STA and ENGINE SPD signals while cranking the engine.
- Circuit Inspection Using a DVOM or V-BoB: Inspect the following signals for behavior as indicated above; STA, (THW), NE, G, IGF, IGT, #10, #20…#etc. Refer to the appropriate Repair Manual circuit inspection charts and to the Engine Control System schematic in the EWD for troubleshooting details.

- For inspection of NE, G, IGF, and IGT signals, use oscilloscope display or a DVOM.

Fuel Injector Testing

Using SSTs, the fuel injector is tested for volume and leakage. Both specifications are given in the Reapir Manual.

The volume is a measurement of how much fuel comes out of the injector in a given time period.

The leakage test checks for leaks and a loss of pressure in a given time period.

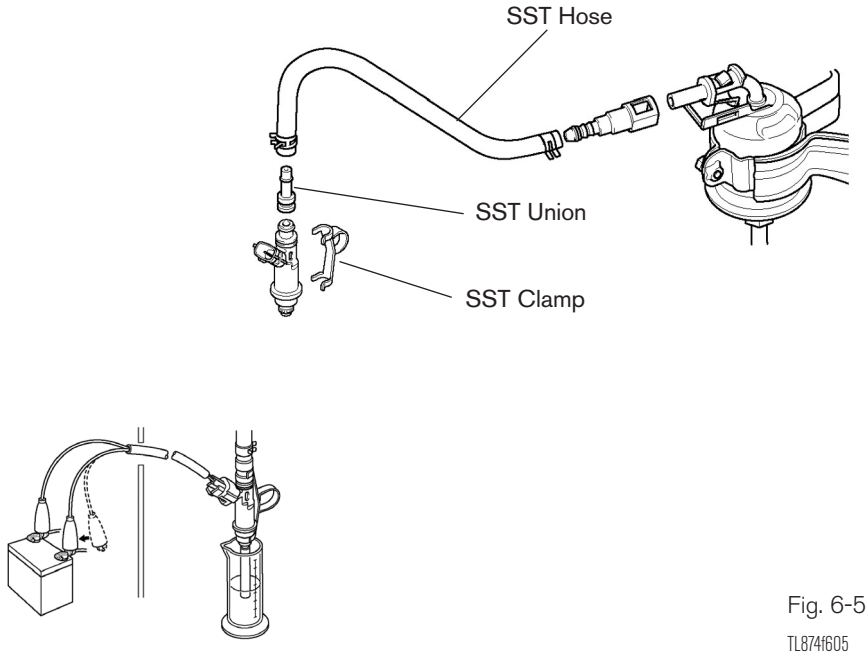

Fig. 6-5

TL874f605

Other Checks

There are other systems and components that can cause the fuel trim to go out of range. The following is a general list. Always consult the Repair Manual for specific procedures.

- **Air Induction System:** Check that all components are in place and properly sealed. Inspect hoses for damage. Inspect the air filter.
- **PCV System:** Inspect hose and system.
- **Inspect the Engine Coolant Temperature Sensor:** The ECT sensor circuit with abnormal resistance can cause the fuel trim to go out of range. ECT readings should match engine temperature.
- **Ignition System:** Cylinder misfire can drive the fuel trim out of range.
- **Exhaust System Leak:** A leaking exhaust system can change the oxygen or A/F sensor signal. Inspect and repair any leaks.
- **Check O2 Sensor or A/F Sensor Response:** Do this after confirming all other systems are good.

Section 7

O2 and A/F Sensor Diagnosis

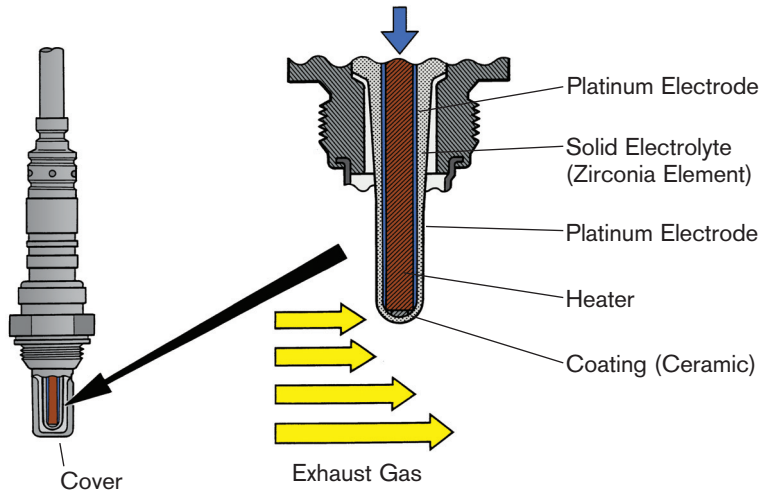

Learning Objectives:

1. Determine the condition of an O2 sensor, A/F sensor and heater based on data and engine symptoms and determine appropriate repair.
2. Use Modes 5, 6, and 7 to determine monitored O2 sensor results.
3. Accurately measure and interpret oxygen content of the exhaust gases based on sensor signal data.
4. Describe the primary difference between the O2 sensor and the A/F sensor.
5. Use Modes 6 and 7 to determine monitored A/F sensor results.

Notes

O2 & A/F Sensor Diagnosis

O2 Sensor Locations

S1 designates the oxygen sensor is before the catalytic converter, S2 after the catalytic converter. B1 indicates the sensor is on the bank with cylinder No. 1.

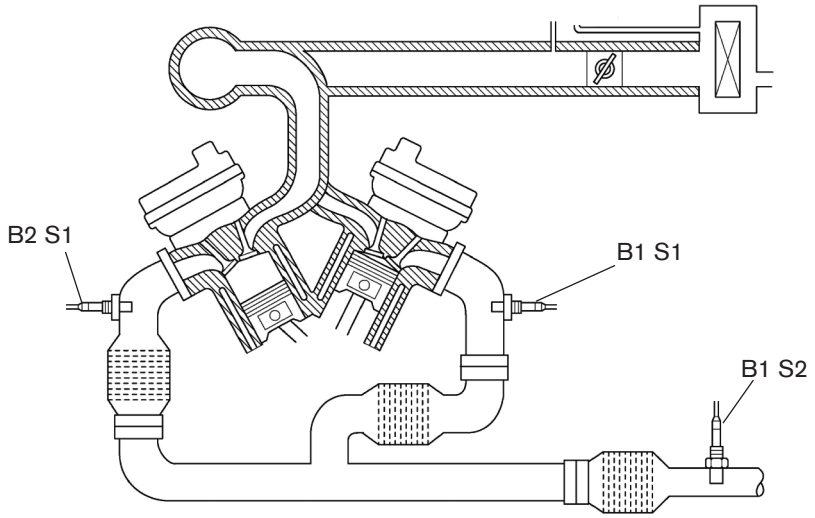

Fig. 7-1

TL874f701

Overview

The ECM uses an O2 sensor to ensure the A/F Ratio is correct for the catalytic converter. Based on the oxygen sensor signal, the ECM's fuel control program adjusts the amount of fuel injected into the cylinder. This program varies based on the type of O2 sensor.

There are different types of O2 sensors, but two of the more common types are the:

- narrow range O2 sensor, the oldest style, simply called the O2 sensor.
- wide range O2 sensor, the newest style, called the A/F sensor.

OBD II vehicles require two O2 sensors: one before and one after the catalytic converter. The O2 sensor, or A/F sensor before the catalytic converter is used by the ECM to adjust the A/F Ratio. The O2 sensor after the catalytic converter is primarily used for catalytic converter efficiency control and monitoring. (See Section 8 Overview)

O2 Sensor Monitor

The O2 sensor monitor checks for sensor circuit malfunctions, slow response rate, and for a malfunction of the sensor's heater circuit. There is a DTC for each condition for each sensor. The sub-sensor(S2) is not monitored for response rate. O2 sensors are required to be monitored once per trip, however, the ECM continuously monitors O2 sensor operation.

When the ECM sees the right conditions, the ECM will test the O2 sensors for performance by measuring the signal response as the fuel injected into the cylinder is varied. The faster the O2 sensor responds, the better the sensor. Mode 5 will report the results of this monitor test.

The repair confirmation drive pattern in the Repair Manual provides the driving conditions for the ECM to operate the O2 sensor monitor.

P0125 for O2 Sensor

DTC P0125 is stored when there is little or no signal response from the O2 sensor. Although the description in the Repair Manual states "insufficient coolant temp for closed loop fuel control" for this code, this can be one cause for no signal output from the O2 sensor. The sensor is monitored for a rise in voltage to (0.45V) when:

- Engine speed is 1,500 rpm or more
- Vehicle speed is 25 – 62 mph (40 – 100 km/hr)
- TPS does not register idle
- The condition continues for at least 90 sec.
- 140 seconds or more must have passed since the engine was started

This DTC is a one trip code, and will also set as a result of a problem due to any of the following items:

- Air induction system
- EGR system
- Fuel pressure
- Fuel injection
- Gas leakage on exhaust system
- Other related parts failure

NOTE This DTC will set when a sensor output has very little or no activity.

HINT A lean condition or an inoperative sensor will have very little activity.

If the vehicle runs out of fuel, the A/F Ratio is lean and DTC P0125 may be recorded. This DTC will also set if no signal is received by the ECM; for example, an open circuit (broken wire).

P0130, P0150: O2 Sensor Output Voltage

This portion of the monitor is concerned with sensor voltage output. These DTC(s) set if the output voltage stays high or low during the test period.

O2 Sensor Monitor
P0130, P0150 (Output Voltage)

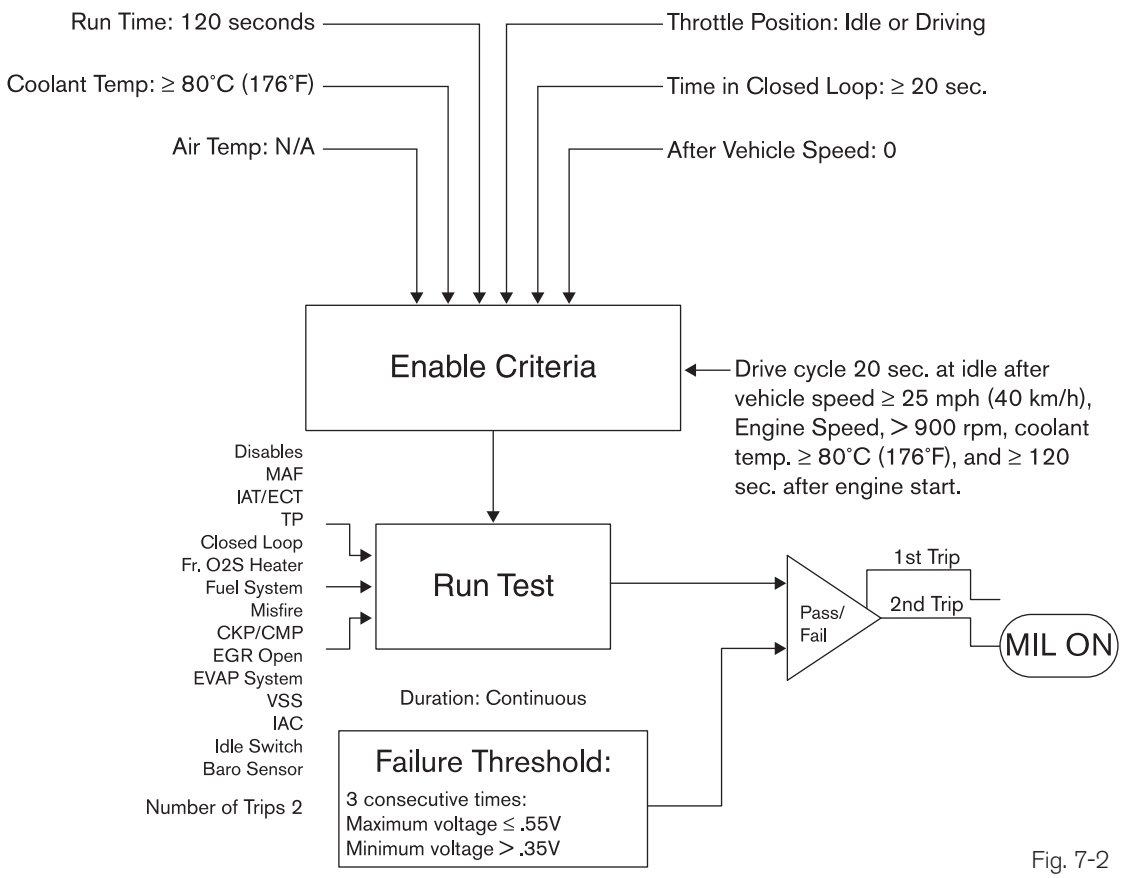

Fig. 7-2

TL874f702

P0133, P0153: O2 Sensor Response Rate

The ECM monitors the response of the O2 sensor.

This part of the monitor is concerned with the time the O2 sensor takes to switch from .35V and .55V.

NOTE The failure threshold for switching can be as much as 1.1 seconds (max).

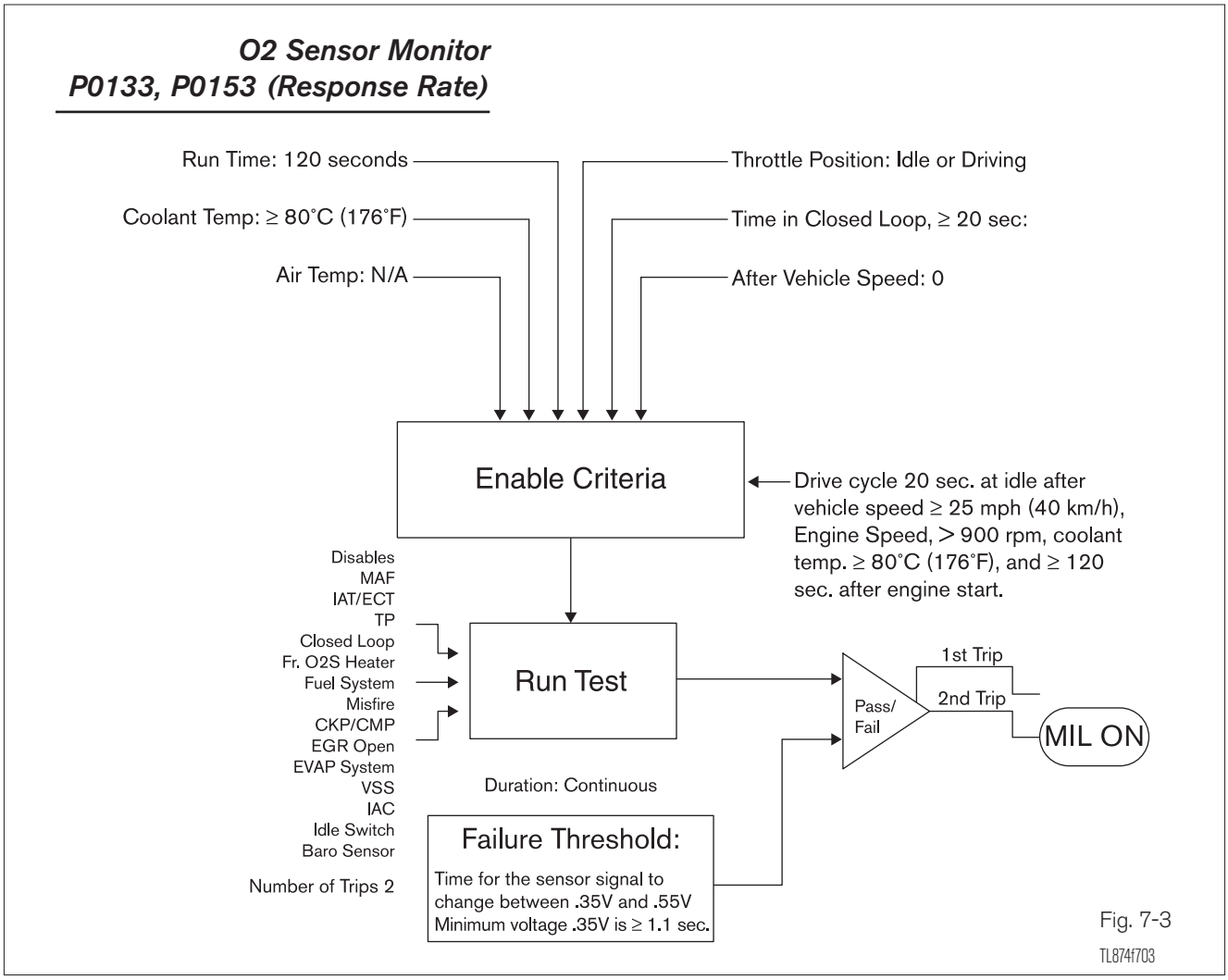

Fig. 7-3

O2 Sensor Detection Driving Pattern

The detection driving pattern shown will provide the conditions necessary for the O2 Sensor to show a response. If the sensor output remains within the failure threshold a DTC will set when all test parameters are met.

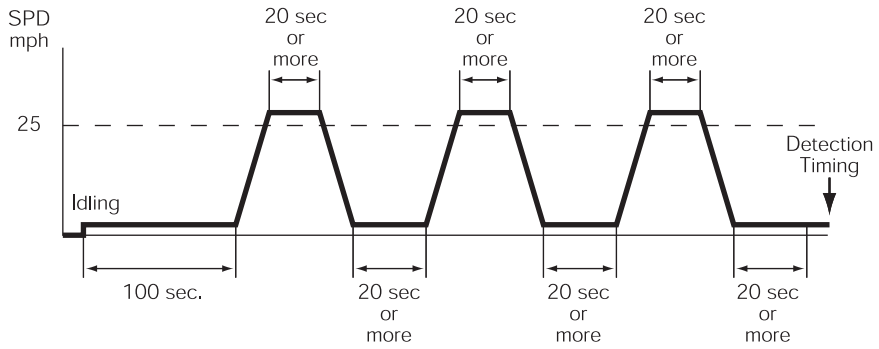

Fig. 7-4

TL874f704

Mode 5 O2 Sensor Monitoring Test Results

This mode displays the test results of the O2 sensor test monitor. These values are stored values, not current values that are found in Mode 1 (DATA LIST). Not all test values are applicable to all manufacturers. The A/F sensor test values are not applicable and are not displayed in Mode 5. Some vehicles use Non-Continuous Test Results mode to report results.

The following is a definition for the displayed terms under Mode 5, O2S Test Results:

- **R>>L O2S V** Rich to lean threshold voltage – voltage used by the ECM to determine the boundary line when going from rich to lean
  L>>R O2S V Lean to rich threshold voltage – voltage used by the ECM to determine the boundary line when going from lean to rich

- **LOW SW V** Low sensor voltage point for switch time calculation – value used by the ECM for switch time calculation
  HIGH SW V High sensor voltage point for switch time calculation – value used by the ECM for switch time calculation

- **R>>L SW TIM** Rich to lean switch time – time in seconds it takes to switch from Rich to Lean based on high to low switch voltages
  L>>R SW TIM Lean to rich switch time – time in seconds it takes to switch from Rich to Lean based on low to high switch voltages

- **MIN O2S V** Minimum sensor voltage during the test cycle
  MAX O2S V Maximum sensor voltage during the test cycle

- **O2S TRANS T** Time between sensor transitions – time between the rich to lean and lean to rich threshold voltages

- **TID $30** – The amount of time, used as a reference for the number (counts) each time the O2 sensor signal crosses the low and high sensor voltage points
  TID $70 – The number of counts, determined by the number of times the signal crossed the low and high sensor voltage points

This screens data can be used as a report on the condition of the O2 sensor. A malfunctioning sensor will switch slowly or not at all. Please keep in mind that other factors can affect O2 sensor performance.

O2 Sensor Monitoring Screens - Mode 5

These screens are found under the CARB section, O2S Test results.

```
O2 SENSOR TEST (B1 - S1)

LOW SW V............ 0.350V
HIGH SW V........... 0.550V
MIN O2S V........... 0.025V
MAX O2S V........... 0.790V
Time $31............. 0.04s
Time $32............. 0.04s
```

```
O2 SENSOR TEST (B2 - S2)

MIN O2S V........... 0.085V
MAX O2S V........... 0.785V
```

Fig. 7-5

TL874f705

O2 Sensor Test Reference Points - Mode 5

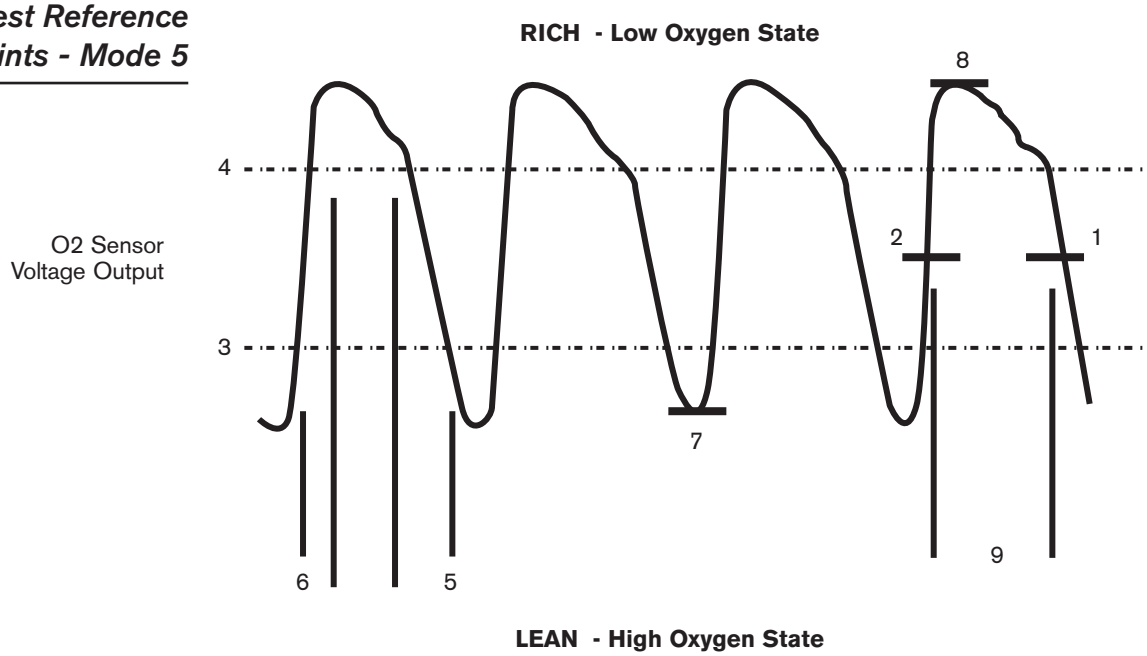

1) R>>L O2S V Rich to lean threshold voltage

2) L>>R O2S V Lean to rich threshold voltage

3) LOW SW V Low sensor voltage for switch time calculation

4) HIGH SW V High sensor voltage for switch time calculation

5) R>>L SW TIM Rich to lean switch time

6) L>>R SW TIM Lean to rich switch time

7) MIN O2S V Minimum sensor voltage during the test cycle

8) MAX O2S V Maximum sensor voltage during the test cycle

9) O2S TRANS T Time between sensor transitions

Fig. 7-6

TL874f706

O2 Sensor Counts

The ECM provides the number of counts in a given time period. A count is when the voltage signal first crosses the high or low sensor voltage point.

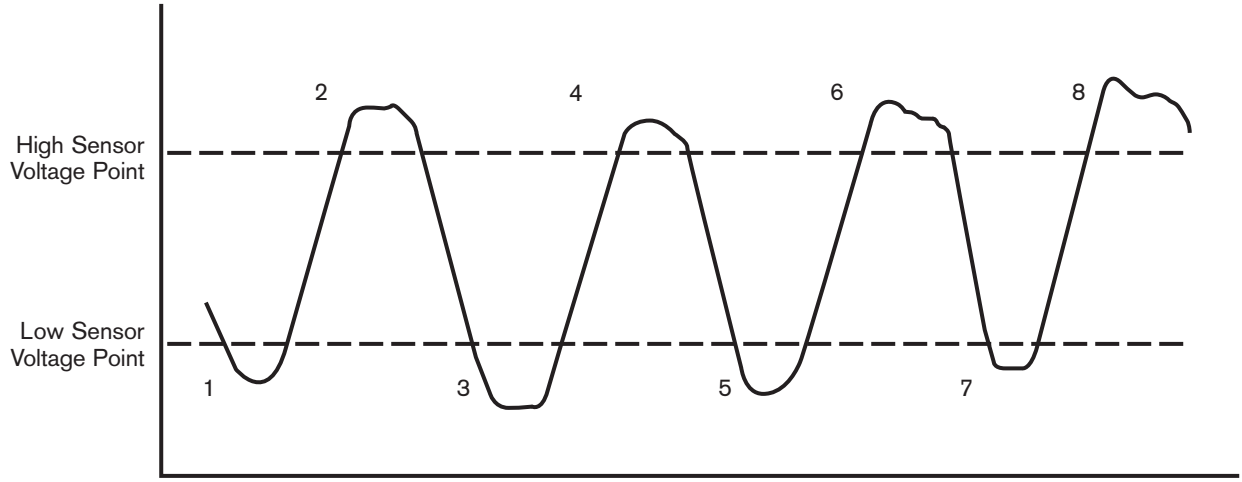

Fig. 7-7

TL874f707

Poor O2 Sensor Response

Poor O2 Sensor response as seen on an oscilloscope.

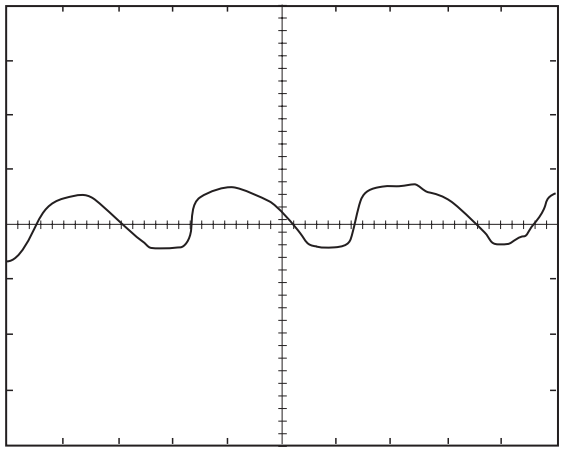

Fig. 7-8

TL874f708

P0136, P0156: Sub O2 Sensor Output Voltage The ECM monitors the output voltage of the O2 sensor. A DTC will set if output voltage remains high or low during the test period. See Mode 5, O2S Test Results.

Sub O2 Sensor Test Results

```
O2 SENSOR TEST (B2 - S2)

MIN O2S V........... 0.085V
MAX O2S V........... 0.785V
```

Fig. 7-9

TL874f709

Sub O2 Sensor Monitor P0136, P0156

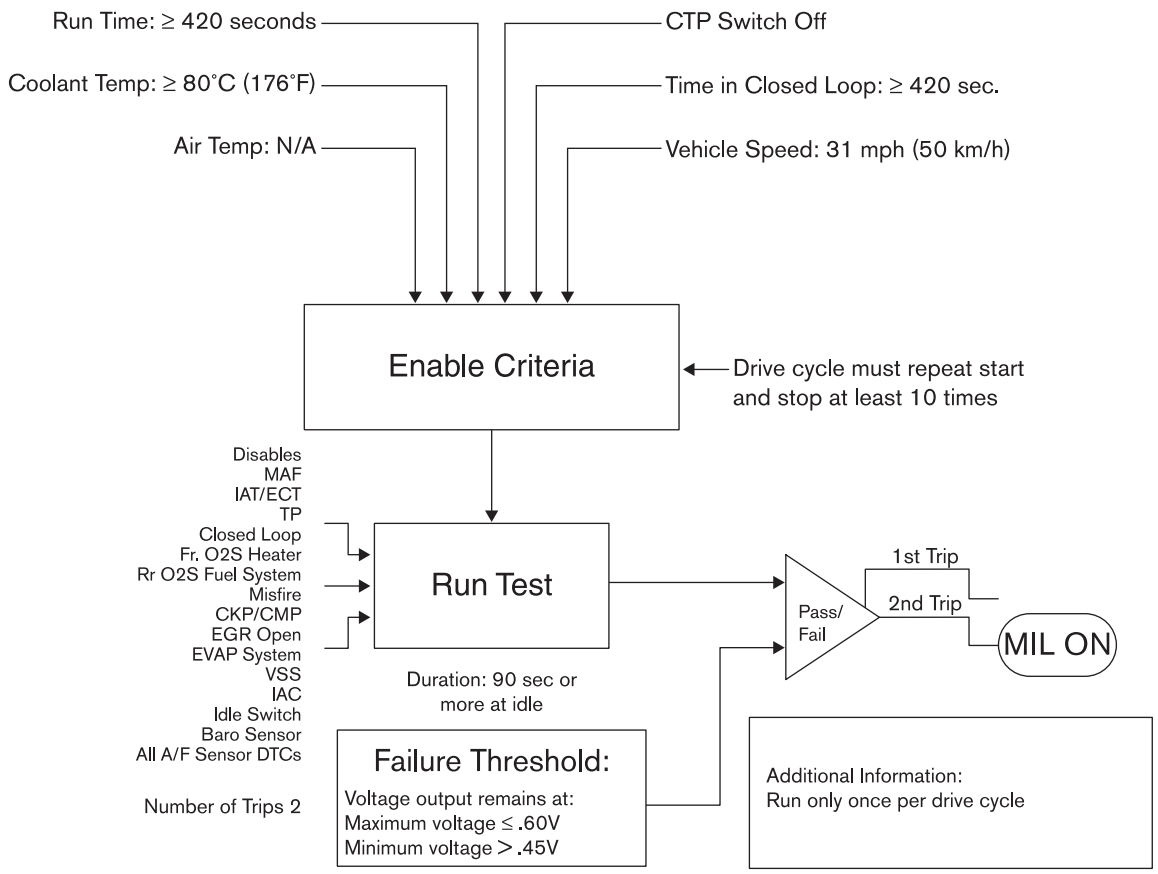

Fig. 7-10

TL874f403710

Sub O2 Sensor Detection Driving Pattern

The detection driving pattern shown will provide the conditions necessary for the Sub or rear O2 Sensor to show a response. If the sensor output remains within the failure threshold a DTC will set when all test parameters are met.

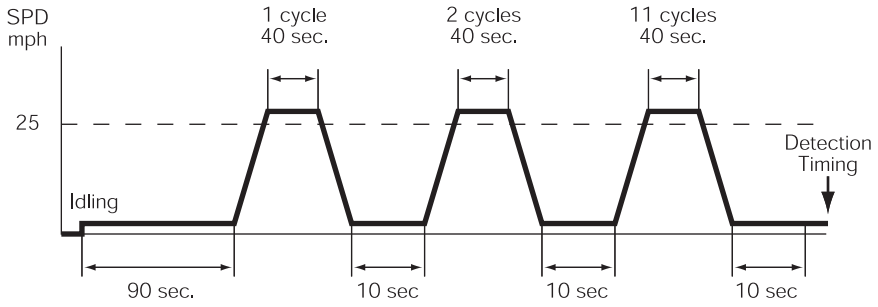

Fig. 7-11

TL874f711

P0135, P0141, P0155, P0161: O2 Sensor Heater Monitor

All heated O2 sensors are monitored for abnormal heater condition. The ECM checks the amount of current required for the sensor heater. If the current is too high or too low a DTC will be set.

O2 Sensor Heater Monitor P0135, P0141, P0155 (Circuit Current)

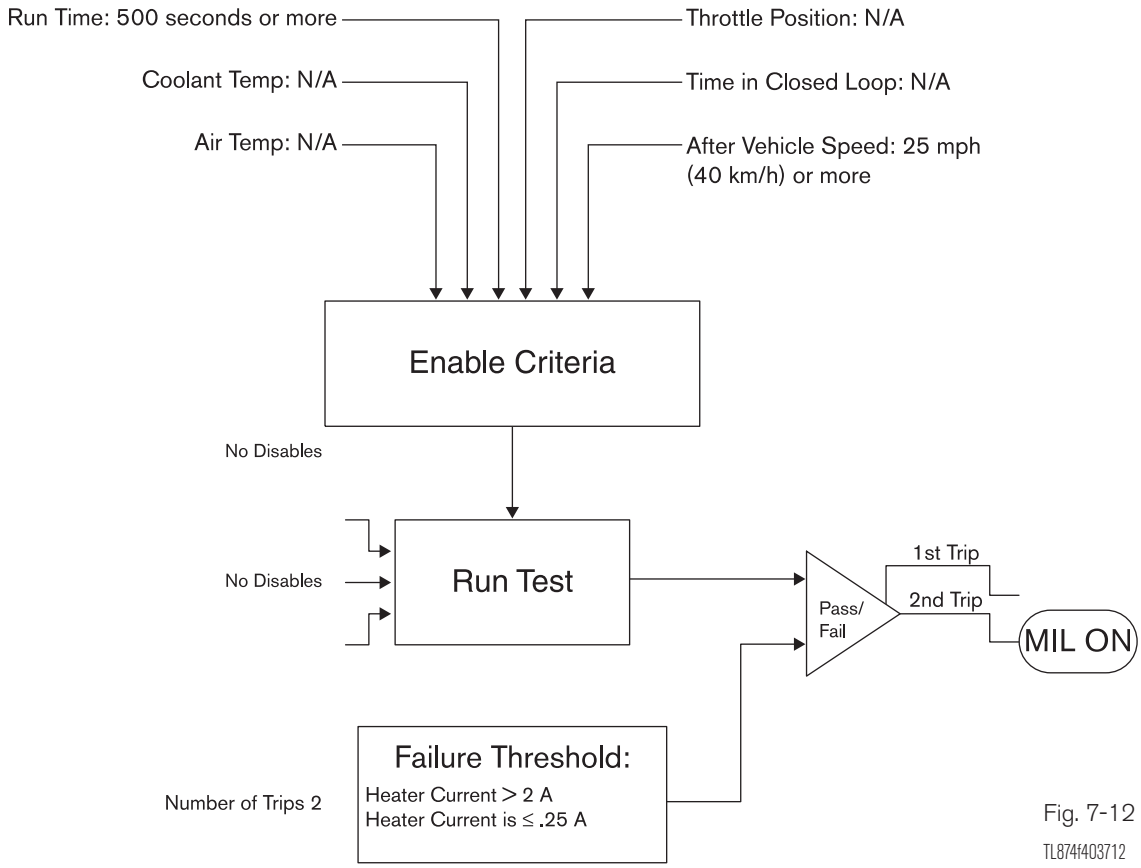

Fig. 7-12

TL874f403712

O2 Sensor DTC(s)

P0125: Coolant Temperature Insufficient for Closed Loop Operation (Bank 1 or 2 Sensor 1)

After the engine is warmed up, heated O2 sensor output does not indicate RICH even when conditions (a), (b), (c) and (d) continue for at least 1.5 min.:

a. Engine speed: 1,500 rpm or more

b. Vehicle speed: 25 - 62 mph (40 - 100 km/h)

c. Throttle valve does not fully close

d. 140 sec. or more after starting engine

This DTC can be set due to other related parts failure.

P0130: Heated O2 Sensor Circuit Malfunction (Bank 1 Sensor 1)

Voltage output of heated O2 sensor remains at 0.40V or more, or 0.55V or less, during idling after the engine is warmed up. Please confirm voltage specification in vehicle Repair Manual.

(two trip detection logic)

This DTC can be set due to other related parts failure.

P0133: Heated O2 Sensor Circuit Slow Response (Bank 1 Sensor 1)

Response time for the heated O2 sensor's voltage output to change from rich to lean, or from lean to rich, is 1.1 sec. or more during idling after the engine is warmed up.

(two trip detection logic)

This DTC can be set due to other related parts failure.

P0135: Heated O2 Sensor Heater Circuit Malfunction (Bank 1 Sensor 1)

Heater current exceeds 2A or heater current of 0.2A or less when the heater operates. Please confirm heater resistance specification in vehicle Repair Manual.

(two trip detection logic)

This DTC can be set due to other related parts failure.

P0136: Heated O2 Sensor Circuit Malfunction (Bank 1 Sensor 2)

Voltage output of the heated O2 sensor (bank 1 sensor 2, bank 2 sensor 2) remains at 0.4V or more or 0.5V or less when the vehicle is driven at 19 mph (30 km/h) or more after the engine is warmed up. Please confirm voltage specification in vehicle Repair Manual.

(two trip detection logic)

This DTC can be set due to other related parts failure.

P0141: Heated O2 Sensor Heater Circuit Malfunction (Bank 1 Sensor 2)

Heater current exceeds 2A or heater current of 0.2A or less when the heater operates. Please confirm heater resistance specification in vehicle Repair Manual.

(two trip detection logic)

This DTC can be set due to other related parts failure.

P0150: Heated O2 Sensor Circuit Malfunction (Bank 2 Sensor 1)

Voltage output of heated O2 sensor remains at 0.40V or more, or 0.55V or less, during idling after the engine is warmed up. Please confirm voltage specification in vehicle Repair Manual.

(two trip detection logic)

This DTC can be set due to other related parts failure.

P0153: Heated O2 Sensor Circuit Slow Response (Bank 2 Sensor 1)

Response time for the heated O2 sensor's voltage output to change from rich to lean, or from lean to rich, is 1.1 sec. or more during idling after the engine is warmed up.

(two trip detection logic)

This DTC can be set due to other related parts failure.

P0155: Heated O2 Sensor Heater Circuit Malfunction (Bank 2 Sensor 1)

Heater current exceeds 2A or heater current of 0.2A or less when the heater operates. Please confirm heater resistance specification in vehicle Repair Manual.

(two trip detection logic)

This DTC can be set due to other related parts failure.

P0156: Heated O2 Sensor Circuit Malfunction (Bank 2 Sensor 2)

Voltage output of the heated O2 sensor (bank 1 sensor 2, bank 2 sensor 2) remains at 0.4V or more or 0.5V or less when the vehicle is driven at 19 mph (30 km/h) or more after the engine is warmed up.

(two trip detection logic)

This DTC can be set due to other related parts failure.

P0141: Heated O2 Sensor Heater Circuit Malfunction (Bank 2 Sensor 2)

Heater current exceeds 2A or heater current of 0.2A or less when the heater operates.

(two trip detection logic)

This DTC can be set due to other related parts failure.

O2 Sensor Monitor Diagnosis

When an O2 sensor DTC is found, it is important to look at each DTC description carefully before proceeding with diagnosis. In addition to P0125, each main O2 sensor has three DTC(s), one for a sensor circuit malfunction, one for slow response, and one for the sensor's heater circuit malfunction.

The sub O2 sensors have two DTC(s), one for a sensor circuit malfunction and one for the sub-sensor's heater circuit malfunction. The sub-sensor does not have a DTC for slow response because a sub-sensor shows very little activity during normal operation. Each DTC requires a different approach to diagnosis. Refer to the Repair Manual for the proper diagnostic procedure to follow for each DTC.

The CARB section of the diagnostic tester and the Readiness Test Confirmation procedure can be very useful for O2 sensor diagnosis, particularly Modes 5, 6, and 7. The following screen flows are guides. Varying conditions will have an effect on the outcome.

O2 Sensor Case

The screens shown here demonstrate the importance of checking the CARB screens.

```
NON-CONTINUOUS TESTS

Time$01 CID$01........ Pass
Time$02 CID$01........ Pass
Time$02 CID$02........ Pass
Time$02 CID$03........ Pass
Time$04 CID$01........ Fail
Time$04 CID$02........ Pass
```

Driving the vehicle after the DTCs were cleared, TIME$04 showed FAIL, O2 Sensor Heater.

```
CONTINUOUS TESTS
ECU:  $10 (Engine)
Number of Tests: 1

P0135
O2 Sensor Heater Circuit
Malfunction (Bank 1,
Sensor 1)
```

Pending Codes or Mode 7 reported DTC P0135.

CHECK

```
ECU:  $10 (Engine)
Number of DTCs: 1
MIL ON

P0125
Insufficient Coolant
Temperature for Closed
Loop Fuel Control
```

Further driving on the same trip produced DTC P0125, and the MIL turned on.

```
FREEZE FRAME   0

TROUBLE CODE......... P0125
ENGINE SPD......... 2415RPM
COOLANT TEMP......... 185°F
VEHICLE SPD.......... 55MPH
CALC LOAD............ 40.3%
FUEL SYS #1............. OL
FUEL SYS #2......... UNUSED
SHORT FT #1........... 0.0%
LONG FT #1............ 2.3%
```

The Freeze Frame recorded P0125.

Mode 6 and 7 displayed the reason for P0125, an O2 Sensor Heater not functioning.

Fig. 7-13

TL874f713

A/F Sensor Monitor

The A/F sensor monitor is similar to the O2 sensor monitor; however, the A/F sensor has different characteristics. Therefore, the operating parameters of the monitor also differ.

The A/F sensor monitor checks for sensor circuit malfunction, slow response rate, and for a malfunction of the sensor's heater circuit. There is a DTC for each condition for each sensor. A/F sensors are required to be monitored once per trip; however, the ECM does continuously monitor A/F sensor operation.

When the ECM sees the right conditions, the ECM will test the A/F sensors for performance by measuring the signal response as the fuel injected into the cylinder is varied. The faster the A/F sensor responds, the better the sensor. The results of this monitor test are NOT reported in Mode 5. Mode 6, Non-Continuous Test Results is used to determine if the A/F sensor passed or failed.

The repair confirmation drive pattern in the Repair Manual provides the driving conditions for the ECM to operate the A/F sensor monitor.

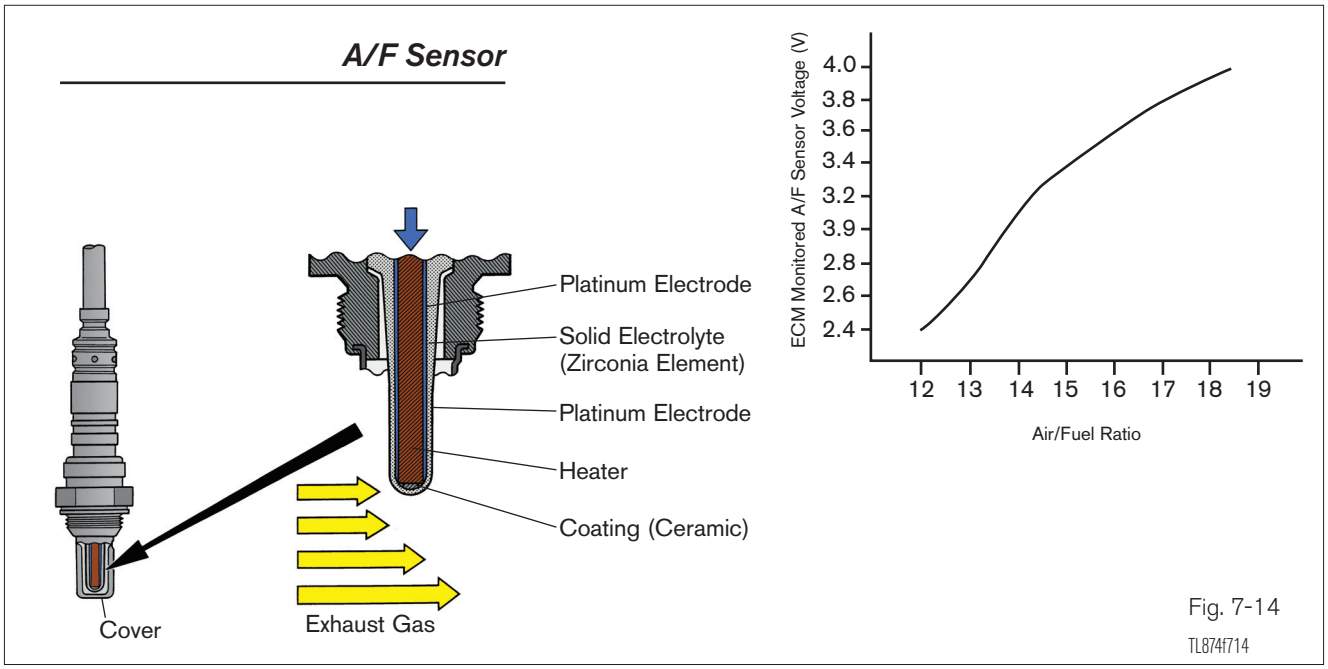

Fig. 7-14

A/F Sensor

The A/F sensor is similar to the O2 sensor. It appears similar to the O2 sensor, but it is constructed differently and has different operating characteristics.

The A/F sensor is also referred to as a wide range or wide ratio sensor because of its ability to detect A/F Ratios over a wide range.

The advantage of using the A/F sensor is that the ECM can more accurately meter the fuel reducing emissions.

To accomplish this, the A/F sensor:

- operates at approximately 650°C (1200°F), much hotter than the O2 sensors which operate at 400°C (750°F)
- changes its current (amperage) output in relation to the amount of oxygen in the exhaust stream

A/F Sensor Detecting Circuit

The detection circuit, located inside the ECM, is needed for the A/F Sensor to operate. The A/F Sensor output cannot be detected externally. A Diagnostic Tester is needed to read A/F Sensor signal output.

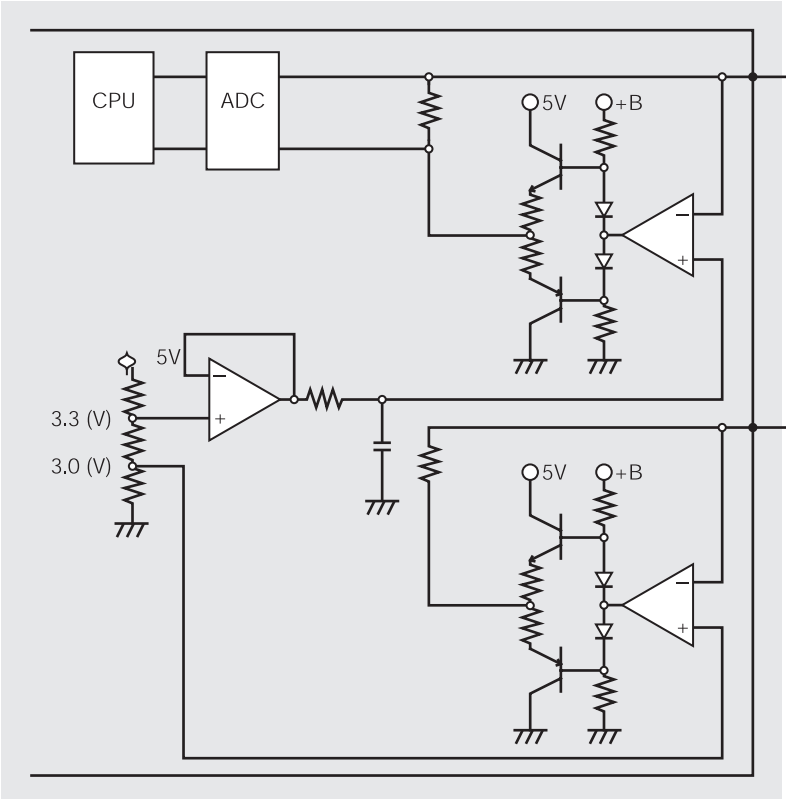

Fig. 7-15

TL874f715

Operation

A detection circuit in the ECM detects the change and strength of current flow and puts out a voltage signal relatively proportional to exhaust oxygen content.

NOTE This voltage signal can only be measured by using the Diagnostic Tester or OBD II compatible scan tool. The A/F sensor current output cannot be accurately measured directly. If a Diagnostic Tester or OBD II compatible scan tool is used refer to the Repair Manual for conversion, for the output signal is different.

The A/F sensor is designed so that at stoichiometry, there is no current flow and the voltage put out by the detection circuit is 3.3 volts. A rich mixture, which leaves very little oxygen in the exhaust stream, produces a negative current flow. The detection circuit will produce a voltage below 3.3 volts. A lean mixture, which has more oxygen in the exhaust stream, produces a positive current flow. The detection circuit will now produce a voltage signal above 3.3 volts.

Exhaust Oxygen Content		Current Flow		Voltage Signal		Air/Fuel Mixture Judged to be:
Low oxygen content	⇨	– direction	⇨	Below 3.3 volts	⇨	Rich
Stoichiometry	⇨	0	⇨	3.3 volts	⇨	14.7:1
High oxygen content	⇨	+ direction	⇨	Above 3.3 volts	⇨	Lean

NOTE The A/F sensor voltage output is the opposite of what happens in the narrow range O2 sensor. Voltage output through the detection circuit increases as the mixture gets leaner.

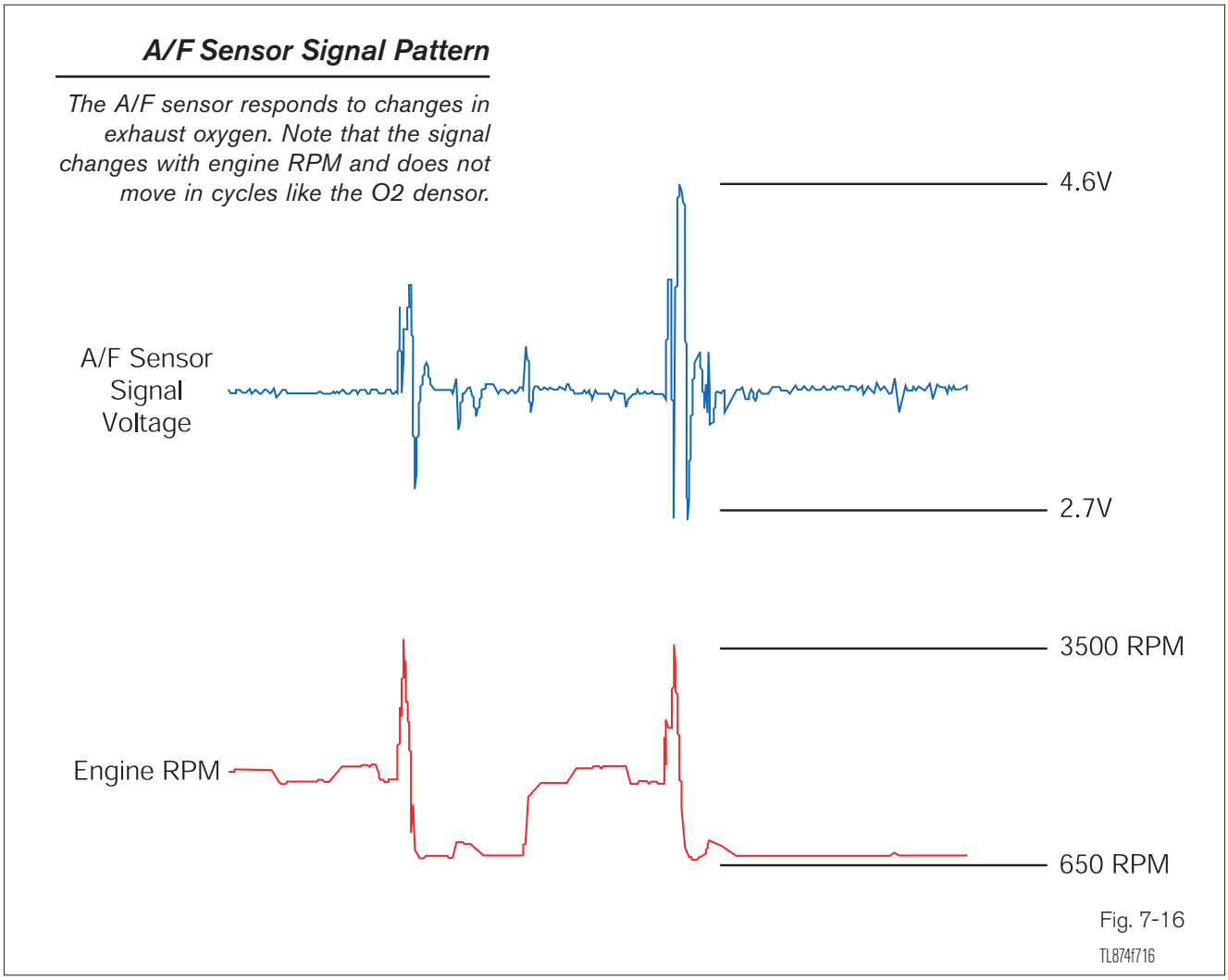

Fig. 7-16

The A/F sensor voltage signal is proportional to the change in the air/fuel mixture. This allows the ECM to more accurately judge the exact A/F Ratio under a wide variety of conditions and quickly adjust the amount of fuel to the stoichiometric point. This type of rapid correction is not possible with the narrow range O2 sensor. With an A/F sensor, the ECM does not follow a rich lean cycle.

P0125 for A/F Sensor

DTC P0125 is related to voltage output, although the description states insufficient coolant temp for closed loop fuel control. The A/F sensor is monitored for activity (voltage change) when:

- Engine speed is 1,500 rpm or more
- Vehicle speed is 25 – 62 mph (40 – 100 kph)
- TPS does not register idle
- The condition continues for at least 90 seconds.
- 140 seconds or more must have passed since the engine was started

This DTC will set when a sensor output has very little or no activity.

HINT A lean condition or an inoperative sensor will have very little activity.

This DTC is a one trip code, and will also set as a result of a problem due to any of the following items:

- Air induction system
- EGR system
- Fuel pressure
- Fuel injection
- Gas leakage on exhaust system
- Other related parts failure

P1130, P1150: A/F Sensor Output Voltage

This monitor is concerned with A/F sensor voltage output. These DTC(s) are found if the output voltage remains fixed for a predetermined period.

NOTE Voltage output changes take place inside the ECM. The Diagnostic Tester must be used for diagnosis.

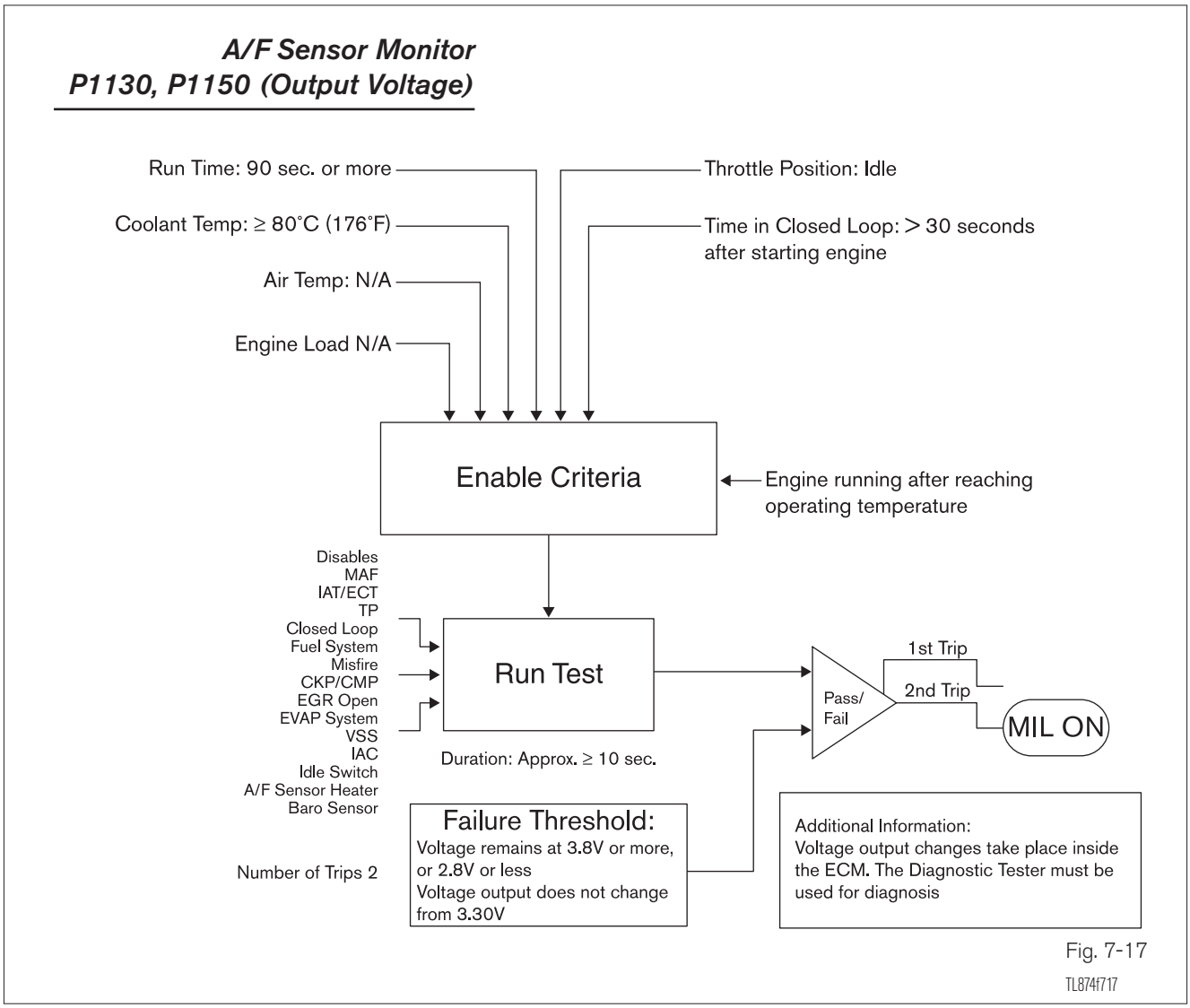

Fig. 7-17

HINT If output voltage of A/F sensor remains at 3.30V, the sensor circuit may be open. If output voltage of the A/F sensor remains 3.8V or more or 2.8V or less, the sensor circuit may be shorted.

P1133, P1153: A/F Sensor Response Rate

The ECM monitors the A/F sensors response characteristics. If the sensor response rate deteriorates, a fault will be recorded. The response rate cannot be confirmed by tests performed at the sensor. The response rate calculation is a function of the ECM only. The ECM compares the A/F sensor's response to the specifications stored in the ECM's programming.

HINT

In addition to Repair Manual procedures, the sensor's operation can be verified using the injector volume active test. This test is done while monitoring the A/F sensors output with the Diagnostic Tester.

A/F Sensor Monitor
P1133, P1153 (Output Voltage)

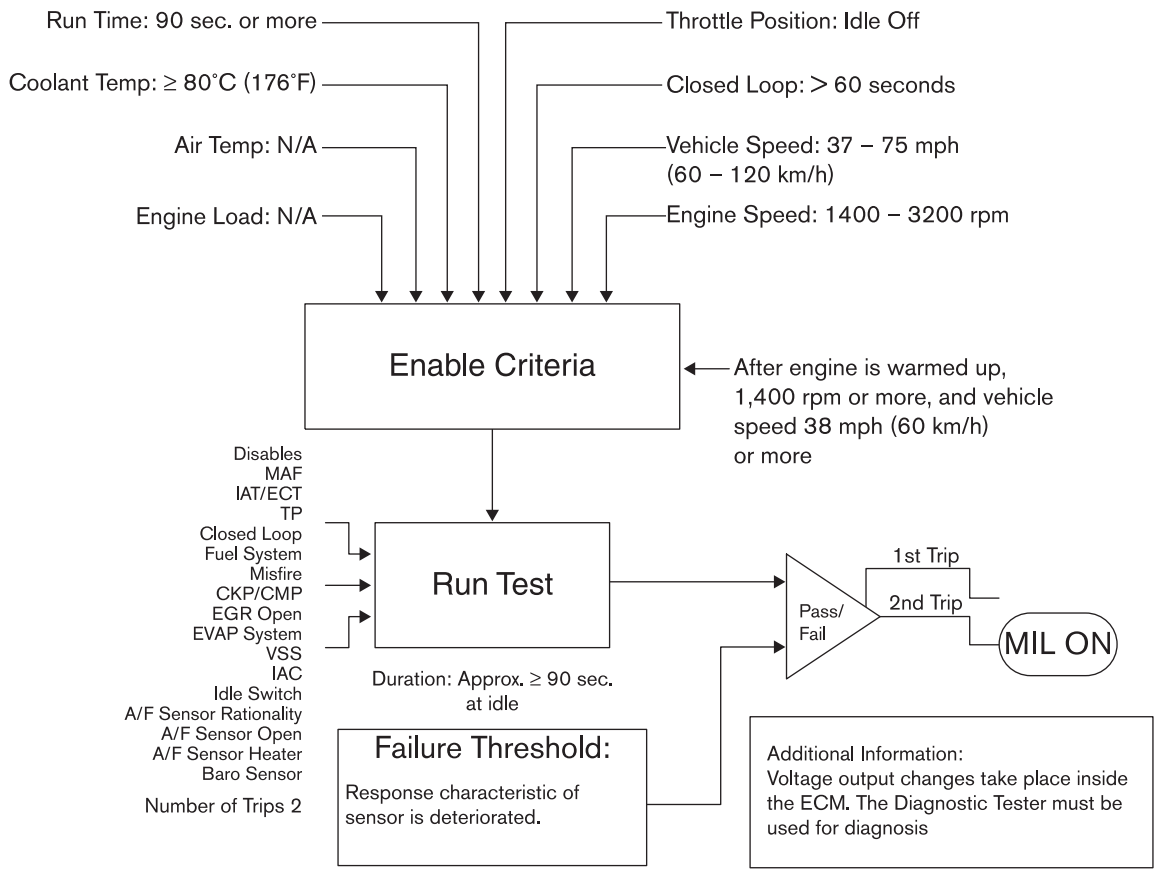

Fig. 7-18

TL874f718

A/F Sensor Detection Driving Pattern

The detection driving pattern shown will provide the conditions necessary for the A/F Sensor to show a response (voltage change). If the sensor output remains within the failure threshold, a DTC will set when all test parameters are met.

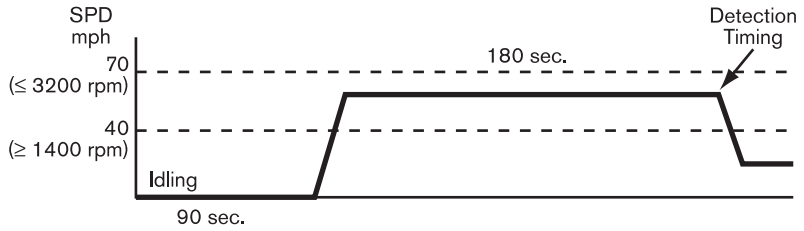

Fig. 7-19

TL874f719

P1135, P1155: A/F Sensor Heater Monitor

All A/F sensors are monitored for abnormal heater condition. The ECM checks the amount of current required for the sensor heater. If the current is too high or too low, a DTC will be set. If the current level detected is too high, the ECM will shut off the heater. When this happens, a P0125 can set.

The ECM provides a pulse width modulated control circuit to adjust current through the heater. On engines with two A/F sensors, the A/F sensor Heater circuit uses a relay on the B+ side of the circuit. In early models, heater DTCs are two trip detection. Beginning with 2001 models, a phased change to one trip DTC detection began.

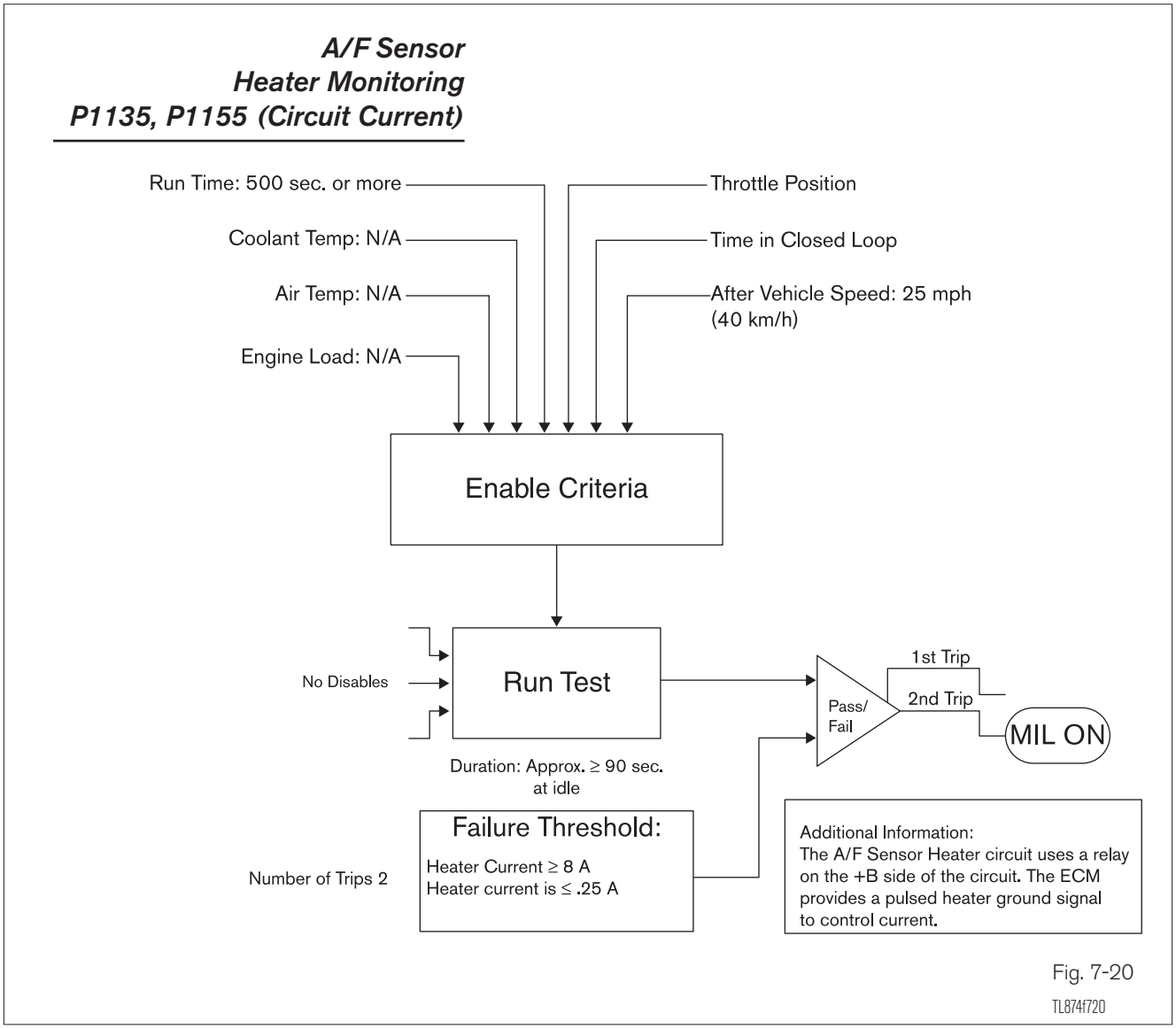
A/F Sensor
Heater Monitoring
P1135, P1155 (Circuit Current)
Run Time: 500 sec. or more
Coolant Temp: N/A
Air Temp: N/A
Engine Load: N/A
Throttle Position
Time in Closed Loop
After Vehicle Speed: 25 mph
(40 km/h)
Enable Criteria
No Disables
Run Test
Duration: Approx. ≥ 90 sec.
at idle
Pass/
Fail
1st Trip
2nd Trip
MIL ON
Failure Threshold:
Heater Current ≥ 8 A
Heater current is ≤ .25 A
Number of Trips 2
Additional Information:
The A/F Sensor Heater circuit uses a relay on the +B side of the circuit. The ECM provides a pulsed heater ground signal to control current.
TL874f720

Fig. 7-20

A/F Sensor DTC(s)

P0125: Coolant Temperature Insufficient for Closed Loop Operation (Bank 1 or 2 Sensor 1)

After the engine is warmed up, A/F sensor Output* does not change when conditions (a), (b), (c), and (d) continue for at least 1.5 min.:

a. Engine speed: 1,500 rpm or more

b. Vehicle speed: 25 – 62 mph (40 –100 km/h)

c. Throttle valve is not fully closed

d. 140 seconds or more after starting engine

This DTC can be set due to other related parts failure.

P1130: Circuit Range/ Performance Malfunction (Bank 1 Sensor 1)

DTC P1130 will set from one of the following conditions:

- Voltage output of A/F sensor remains at 3.8V or more, or 2.8V or less, with engine running after the engine is warmed up
- Voltage output of A/F sensor does not change from 3.30V, with engine running after the engine is warmed up
- Open or short in A/F sensor circuit

(two trip detection logic)

This DTC can be set due to other related parts failure.

P1133: Circuit Response Malfuntion (Bank 1 Sensor 1)

After the engine reaches operating temperature, engine speed is 1,400 rpm or more, vehicle speed 38 mph (60 km/h) or more, and if the A/F sensor signal response is weaker than normal, DTC P1133 sets.

(two trip detection logic)

This DTC can be set due to other related parts failure.

P1135: Heater Circuit Malfunction (Bank 1 Sensor 1)

When the heater operates, heater current exceeds 8A or heater current is 0.25A or less. Please confirm heater resistance specification in the vehicle Repair Manual.

(two trip detection logic, early models; phased change to one trip detection beginning 2001 model.)

This DTC can be set due to other related parts failure.

P1150: Circuit Range/ Performance Malfunction (Bank 2 Sensor 1)

DTC P1150 will set from one of the following conditions:

- Voltage output of A/F sensor remains at 3.8V or more, or 2.8V or less, during engine running after the engine is warmed up
- Voltage output of A/F sensor does not change from 3.30V, during engine running after the engine is warmed up
- Open or short in A/F sensor circuit

(two trip detection logic)

This DTC can be set due to other related parts failure.

P1153: Circuit Response Malfunction (Bank 2 Sensor 1)

After the engine reaches operating temperature, engine speed is 1,400 rpm or more, vehicle speed 38 mph (60 km/h) or more, and if the A/F sensor signal response is weaker than normal, DTC P1133 sets.

(two trip detection logic)

This DTC can be set due to other related parts failure.

P1155: Heater Circuit Malfunction (Bank 2 Sensor 1)

When the heater operates, heater current exceeds 8A or heater current is 0.25A or less. Please confirm heater resistance specification in vehicle Repair Manual.

(two trip detection logic, early models; phased change to one trip detection beginning 2001 model.)

This DTC can be set due to other related parts failure.

NOTE

When an A/F sensor DTC is found, it is important to look at each DTC description carefully before proceeding with diagnosis. In addition to P0125, the A/F sensors each have three DTC(s), one for a sensor range/performance malfunction, one for response malfunction, and one for the sensor's heater circuit malfunction. Each DTC requires a different approach to diagnosis. Refer to the Repair Manual for the proper diagnostic procedure to follow for each DTC.

Planar A/F Sensor

The newer planar A/F sensor can be identified by its shorter body.

The planar has the heater integrated into the sensing element. This sensor has the same detecting range as the previous, cup type A/F sensor.

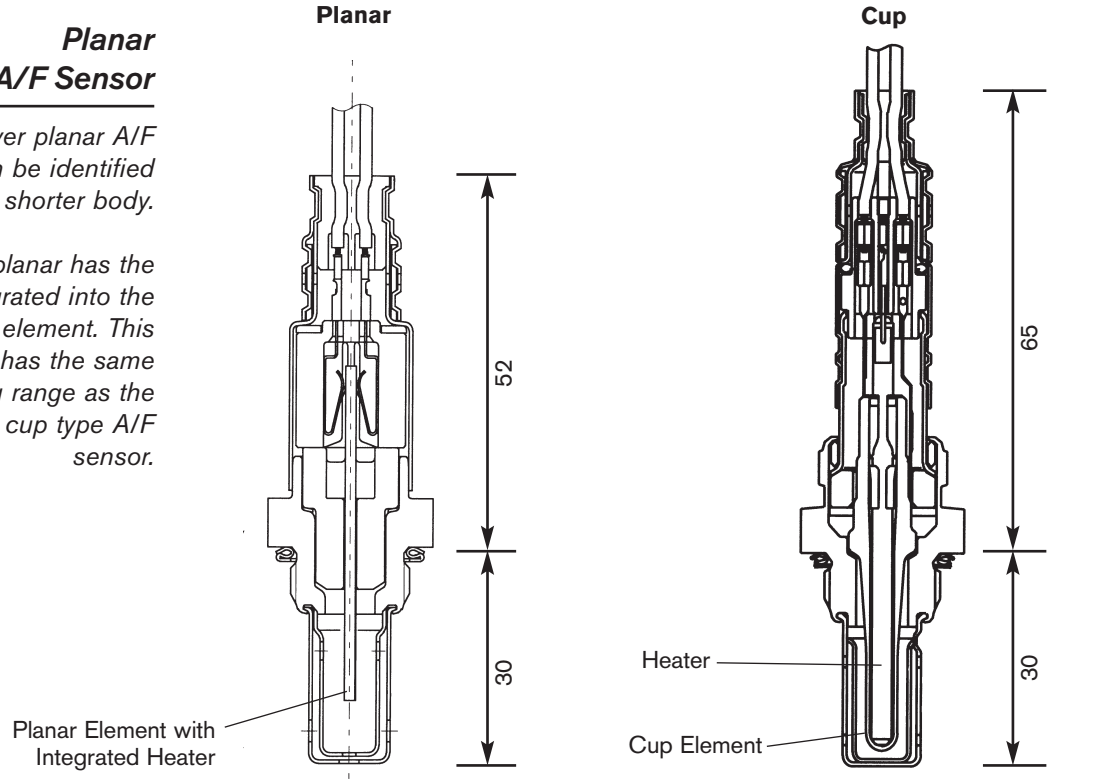

Fig. 7-21

TL874f721

Planar A/F Sensor Operation

A second generation A/F sensor (referred to here as the planar A/F sensor) was developed to meet more stringent emission regulations. This A/F sensor reaches operating temperature faster than the previous (referred to here as the cup element) A/F sensor. This allows the ECM to go into closed loop fuel control faster when the engine is cold reducing cold start emissions.

The planar A/F sensor has the same detecting range and signal characteristics as the previous cup element A/F sensor. The major differences are:

- goes into closed loop fuel control faster.
- heater element has a higher resistance.
- heater DTCs set in one trip.

NOTE This A/F sensor is not interchangeable with the older, cup element A/F sensor.

Planar Element

Like previous O2 and A/F sensors, the planar A/F sensor has ambient air on one side of the ZrO2 and exhaust gases on the other side.

The aluminum oxide layer conducts heat directly to the ZrO2 element providing a rapid warm up.

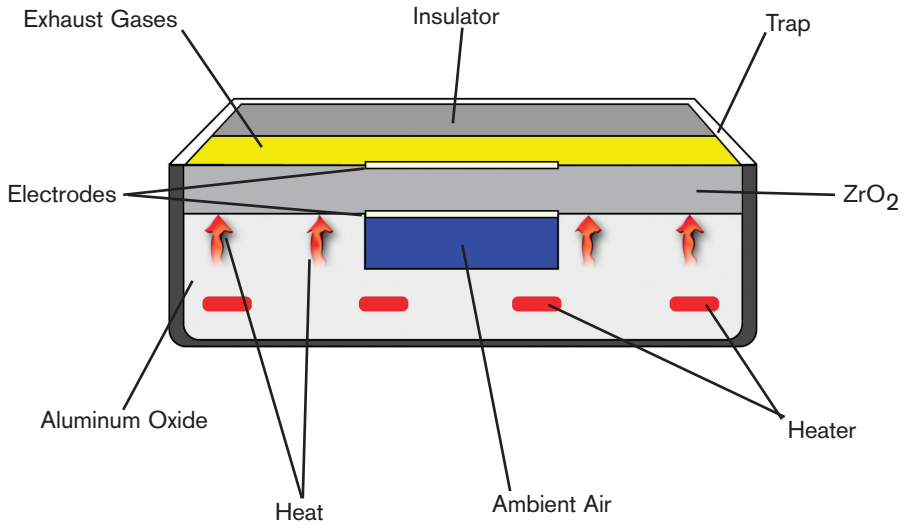

Fig. 7-22

TL874f722

The heater is imbedded into the aluminum oxide. When the heater is on, the aluminum oxide conducts heat directly to the zirconium dioxide layer bring the A/F sensor to operating temperature quickly.

Aluminum oxide is also an excellent electrical insulator. This prevents any voltage from the heater affecting signal output. Cracks or element contamination can alter signal output.

Signal Characteristics

The generated voltage output signal is identical to the previous A/F sensor. A high exhaust gas oxygen content (lean) produces a higher voltage signal. Stoichiometry is at 3.30 volts.

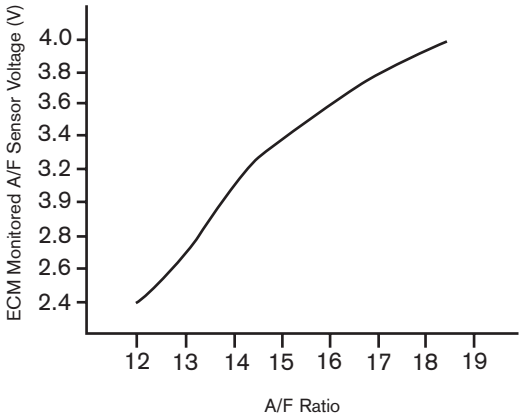

Fig. 7-23

TL874f723

Planar A/F Sensor Signal Detection DTCs

The detection logic for the planar A/F sensor is the same as the cup element A/F sensor EXCEPT for heater related DTCS. Please see the information on A/F sensor signal output DTCs P0125, P1130, P1133, P1150, and P1153 in this section.

Planar A/F Sensor Heater Detection DTCs

The heater circuit and operation is similar to the cup element, though amperage specifications are different. The heater monitor continuously detects over current or under current conditions and will set DTC in one trip. Therefore, heater related DTCs (such as P1135, P1155) will be set on the first trip when a malfunction is detected.

The heater resistance for the planar A/F sensor is slightly higher than the cup element A/F sensor. Heater resistance is checked with a DVOM.

HEATER TEMPERATURE	PLANAR A/F SENSOR	CUP ELEMENT A/F SENSOR	O2 SENSOR
20°C (68°F)	1.8 - 3.4Ω	0.8 - 1.4Ω	11 - 16Ω

A characteristic of this A/F sensor is that when it fails it can drive the A/F signal output high or low causing a rich or lean condition.

A/F Sensor Diagnosis Case Using CARB

```
NON-CONTINUOUS TESTS

Time$01 CID$01........ Pass
Time$02 CID$01........ Pass
Time$02 CID$02........ Pass
Time$02 CID$03........ Pass
Time$02 CID$04........ Pass
Time$04 CID$02........ Pass
Time$05 CID$01........ Pass
Time$05 CID$02........ Pass
Time$06 CID$01........ Pass
Time$06 CID$10........ Pass
Time$07 CID$01........ Pass
Time$07 CID$10........ Fail
```

Driving the vehicle after the DTCs were cleared, TIME$07 showed FAIL, A/F Sensor Heater.

```
CONTINUOUS TESTS
ECU:  $10 (Engine)
Number of Tests: 1

P1150
Manufacturer Controlled
Fuel and Air Metering
```

Pending Codes or Mode 7 reported DTC P1150

CHECK

```
ECU:  $10 (Engine)
Number of DTCs: 1
MIL ON

P0125
Insufficient Coolant
Temperature for Closed
Loop Fuel Control
```

Further driving on the same trip produced DTC P0125, and the MIL turned on.

```
FREEZE FRAME   0

TROUBLE CODE......... P0125
ENGINE SPD......... 1833RPM
COOLANT TEMP......... 187°F
VEHICLE SPD.......... 37MPH
CALC LOAD............ 49.8%
FUEL SYS #1........ OLDRIVE
FUEL SYS #2........ OLDRIVE
SHORT FT #1........... 0.0%
LONG FT #1........... -1.5%
SHORT FT #2.......... -0.0%
LONG FT #2............ 3.9%
```

The Freeze Frame recorded P0125.

Conclusion: Mode 6 and 7 displayed the reason for P0125, an A/F Sensor Heater not functioning.

Fig. 7-24
TL874f724

Notes

WORKSHEET 7-1
A/F Sensor Tests

Vehicle	Year/Prod. Date	Engine	Transmission

Worksheet Objectives

In this worksheet, you will use the Diagnostic Tester to test A/F sensor performance and compare to specifications to determine condition.

Tools and Equipment

- Vehicle Repair Manual
- Vehicle EWD
- Diagnostic Tester
- Hand Tool Set

Section 1: A/F Sensor

1. With the key on and engine off, measure voltage between ECM terminals HAFR and HAFL and body ground.

A/F Sensor Circuit Test

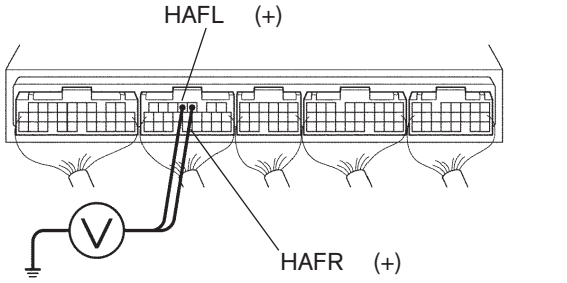

2. Use the EWD to trace the A/F Sensor Heater circuit.

   This test confirms the operation of which components and continuity of which circuits?

   _____

   _____

3. Using the repair manual(s), compare the resistance of an O2 sensor heater to the A/F sensor heater.

4. What is the major difference between the two sensors?

   _____

Section 2: A/F Sensor Response

Connect the Diagnostic Tester. With the engine at operating temperature, go to Data List, USER DATA and select one of the A/F sensors, Short Term Fuel Trim, and select ENTER. Select F4. With a set of jumper leads, connect a Fluke 87 (or comparable) DVOM in series with the A/F signal wire. Make sure, the + lead is in the milliamp socket.

1. Record A/F sensor engine idling. Briefly, snap the throttle wide open and release. What happened?

_____

2. Disconnect a vacuum hose. Was there a change to A/F voltage signal and Short Term Fuel Trim?

_____

3. Reconnect vacuum hose.

4. **Predict** what **will** happen to A/F signal voltage and amperage if more fuel is added?

_____

5. Go to Injector Volume Active Test. Increase injector duration. What happened to A/F sensor voltage and amperage signal?

_____

6. Decrease injector duration. What happened to A/F sensor signal voltage amperage?

_____

Test or confirm repair method using CARB OBD II Readiness Tests.

1. Access Readiness Test Mode under CARB OBD II. What does it report ?

_____

Case 1

After DTCs were cleared, an A/F sensor equipped vehicle was driven one trip according to the drive pattern. Answer the following questions using the listed screen prints.

```
READINESS TEST

MISFIRE MON........... AVAIL
FUEL SYS MON......... AVAIL
COMP MON............. AVAIL
CAT EVAL............. COMPL
HTD CAT EVAL........... N/A
EVAP EVAL........... INCMPL
2nd AIR EVAL........... N/A
A/C EVAL............... N/A
O2S EVAL............ INCMPL
O2S HTR EVAL........ INCMPL
EGR EVAL............. COMPL
```

```
NON-CONTINUOUS TESTS

Time$01 CID$01........ Pass
Time$02 CID$01........ Pass
Time$02 CID$02........ Pass
Time$02 CID$03........ Pass
Time$02 CID$04........ Pass
Time$04 CID$02........ Pass
Time$05 CID$01........ Pass
Time$05 CID$02........ Pass
Time$06 CID$01........ Pass
Time$06 CID$10........ Pass
Time$07 CID$01........ Pass
Time$07 CID$10........ Pass
```

TL874f7w71

2. Do the screens indicate a problem with the vehicle?

_____

3. What area(s) is affected?

_____

4. Will there be DTC(s) and Freeze Frame?

_____

Case 2

An A/F sensor equipped vehicle was driven after DTCs were cleared. Answer the questions from the following screens.

```
READINESS TEST

MISFIRE MON........... AVAIL
FUEL SYS MON......... AVAIL
COMP MON............. AVAIL
CAT EVAL............ INCMPL
HTD CAT EVAL........... N/A
EVAP EVAL........... INCMPL
2nd AIR EVAL........... N/A
A/C EVAL............... N/A
O2S EVAL............ INCMPL
O2S HTR EVAL........ INCMPL
EGR EVAL............ INCMPL
```

```
NON-CONTINUOUS TESTS

Time$01 CID$01........ Pass
Time$02 CID$01........ Pass
Time$02 CID$02........ Pass
Time$02 CID$03........ Pass
Time$02 CID$04........ Pass
Time$04 CID$02........ Pass
Time$05 CID$01........ Pass
Time$05 CID$02........ Pass
Time$06 CID$01........ Pass
Time$06 CID$10........ Pass
Time$07 CID$01........ Pass
Time$07 CID$10........ Fail
```

TL874f7w71

1. Do the screens indicate a problem with the vehicle?

_____

2. What area(s) is affected?

_____

3. Will there be DTC(s) and Freeze Frame?

_____

Case 3

After DTCs were cleared, an A/F sensor equipped vehicle was driven one trip according to the drive pattern. Answer the following questions using the listed screen prints.

```
READINESS TEST

MISFIRE MON........... AVAIL
FUEL SYS MON......... AVAIL
COMP MON............. AVAIL
CAT EVAL............. COMPL
HTD CAT EVAL........... N/A
EVAP EVAL............ COMPL
2nd AIR EVAL........... N/A
A/C EVAL............... N/A
O2S EVAL............ INCMPL
O2S HTR EVAL......... COMPL
EGR EVAL............... N/A
```

```
NON-CONTINUOUS TESTS

Time$01 CID$01........ Pass
Time$02 CID$01........ Pass
Time$02 CID$02........ Pass
Time$02 CID$03........ Pass
Time$02 CID$04........ Pass
Time$04 CID$02........ Pass
Time$06 CID$01........ Fail
Time$06 CID$10........ Pass
Time$07 CID$01........ Pass
Time$07 CID$10........ Pass
Time$08 CID$01........ Pass
```

TL874f7w71

1. Do the screens indicate a problem with the vehicle?

_____

2. What area(s) is affected?

_____

3. Will there be DTC(s) and Freeze Frame?

_____

Case 4

After DTCs were cleared, an A/F sensor equipped vehicle was driven one trip according to the drive pattern. The MIL illuminated. Answer the following questions using the listed screen prints.

```
FREEZE FRAME 0

TROUBLE CODE......... P0125
ENGINE SPD......... 1833RPM
COOLANT TEMP......... 187°F
VEHICLE SPD.......... 37MPH
CALC LOAD............ 49.8%
FUEL SYS #1........ OLDRIVE
FUEL SYS #2........ OLDRIVE
SHORT FT #1........... 0.0%
LONG FT #1........... -1.5%
SHORT FT #2........... 0.0%
LONG FT #2............ 3.9%
```

```
NON-CONTINUOUS TESTS

Time$01 CID$01........ Pass
Time$02 CID$01........ Pass
Time$02 CID$02........ Pass
Time$02 CID$03........ Pass
Time$02 CID$04........ Pass
Time$04 CID$02........ Pass
Time$05 CID$01........ Pass
Time$05 CID$02........ Pass
Time$06 CID$01........ Pass
Time$06 CID$10........ Pass
Time$07 CID$01........ Pass
Time$07 CID$10........ Fail
```

TL874f7w71

1. Do the screens indicate a problem with the vehicle?

_____

2. What area(s) is affected?

_____

3. Will there be more DTC(s) on the second trip if driven according to the drive pattern?

_____

A/F Sensor Tests

Name: _____ Date: _____

Review this sheet as you are doing the worksheet. Check each category after completing the worksheet and instructor presentation. Ask the instructor if you have questions. The comments section is for you to write where to find the information, questions, etc.

Topic	*I have questions*	*I know I can*	Comment
Locate components using the EWD and RM			
Find wire colors, pin numbers using the EWD and RM			
Check condition of heater circuit with DVOM			
Accurately measure & interpret; oxygen content of the exhaust gases based on sensor signal data			
Describe the primary difference between the O2 sensor and the A/F sensor			
Use Modes 6 and 7 to determine monitored A/F sensor results			
Measure A/F sensor signal with DVOM and determine engine operating conditions			

Notes

WORKSHEET 7-2
O2 Sensor Test

Vehicle	Year/Prod. Date	Engine	Transmission

Worksheet Objectives

In this worksheet, you will use the Diagnostic Tester and to check and test O2 sensor monitor performance and determine needed action.

Tools and Equipment

- Vehicle Repair Manual
- Vehicle EWD
- Diagnostic Tester
- Hand Tool Set

Case 1

Answer the following from the screen shots. The O2 sensor equipped vehicle was driven after clearing DTCs.

```
READINESS TEST

MISFIRE MON.......... AVAIL
FUEL SYS MON......... AVAIL
COMP MON............. AVAIL
CAT EVAL............ INCMPL
HTD CAT EVAL........... N/A
EVAP EVAL........... INCMPL
2nd AIR EVAL........... N/A
A/C EVAL............... N/A
O2S EVAL............ INCMPL
O2S HTR EVAL........ INCMPL
EGR EVAL............... N/A
```

```
NON-CONTINUOUS TESTS

Time$01 CID$01........ Pass
Time$01 CID$02........ Pass
Time$02 CID$01........ Pass
Time$02 CID$02........ Pass
Time$02 CID$03........ Pass
Time$02 CID$04........ Pass
Time$04 CID$01........ Pass
Time$04 CID$02........ Pass
Time$04 CID$10........ Pass
Time$04 CID$20........ Pass
```

TL874f7w72

1. What is the status of the O2S monitor and O2S HTR heater monitor?

_____

2. What does the Readiness Test indicate?

_____

Case 2

Answer the following questions from the screen shot.

```
O2 SENSOR TEST (B1 - S1)

LOW SW V............ 0.350V
HIGH SW V........... 0.550V
MIN O2S V........... 0.025V
MAX O2S V........... 0.790V
Time $31............. 0.04s
Time $32............. 0.04s
```

TL874f7w72

Low SW V	
High SW V	
Min O2S V	
Max O2S V	
Time $31	
Time $32	

1. What information is given in this mode?

2. What does Low/High SW mean and how is this information useful?

3. What does Min/Max O2S mean and how is this information useful?

4. What does Time $31/32 mean and how is this information useful?

5. Is the above O2 sensor good or bad?

Case 3

An O2 sensor equipped vehicle was driven after DTCs were cleared. Answer the questions from the following screens.

```
READINESS TEST

MISFIRE MON........... AVAIL
FUEL SYS MON......... AVAIL
COMP MON............. AVAIL
CAT EVAL............ INCMPL
HTD CAT EVAL........... N/A
EVAP EVAL........... INCMPL
2nd AIR EVAL........... N/A
A/C EVAL............... N/A
O2S EVAL............ INCMPL
O2S HTR EVAL........ INCMPL
EGR EVAL............... N/A
```

```
NON-CONTINUOUS TESTS

Time$01 CID$01........ Pass
Time$01 CID$02........ Pass
Time$02 CID$01........ Pass
Time$02 CID$02........ Pass
Time$02 CID$03........ Pass
Time$02 CID$04........ Pass
Time$04 CID$01........ Fail
Time$04 CID$02........ Pass
Time$04 CID$10........ Pass
Time$04 CID$20........ Pass
```

```
O2 SENSOR TEST (B1 - S1)

LOW SW V............ 0.350V
HIGH SW V........... 0.550V
MIN O2S V........... 0.378V
MAX O2S V........... 0.545V
Time $31............ 1.15s
Time $32............ 1.15s
```

TL87417w72

1. Do the screens indicate a problem with the vehicle?

_____

2. What area(s) is affected?

_____

3. Will there be DTC(s) and Freeze Frame?

_____

Section 4: O2 Sensor Response

1. With the engine at operating temperature, go to DATA LIST and note the O2 sensor voltage signal and Fuel Trim. Disconnect a vacuum hose. Was there a change to oxygen voltage signal and Short Term Fuel Trim?

_____

2. Reconnect vacuum hose.

3. **Predict** what **will** happen to O2 sensor signal voltage if more fuel is added?

_____

4. Go to INJECTOR VOLUME ACTIVE TEST. Add fuel using the Active Test to increase injector duration. What happened to O2 sensor voltage signal?

_____

5. Decrease injector duration. What happened to O2 sensor signal voltage?

_____

O2 Sensor Tests

Name: _____ Date: _____

Review this sheet as you are doing the worksheet. Check each category after completing the worksheet and instructor presentation. Ask the instructor if you have questions. The comments section is for you to write where to find the information, questions, etc.

Topic	*I have questions*	*I know I can*	Comment
Locate components using the EWD and RM			
Find wire colors, pin numbers using the EWD and RM			
Check condition of heater circuit with DVOM			
Accurately measure & interpret; oxygen content of the exhaust gases based on sensor signal data			
Describe the primary difference between the O2 sensor and the A/F sensor			
Use Modes 6 and 7 to determine monitored O2 sensor results			

Notes

Section 8

Catalytic Converter Diagnosis

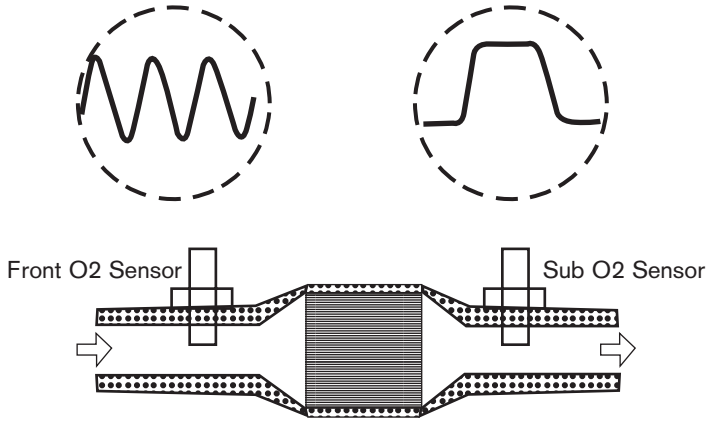

O2 Sensor waveform with ordinary catalyst

Learning Objectives:

1. Determine the condition of the catalytic converter based on data and engine symptoms, and determine appropriate repair.

Notes

Catalytic Converter Diagnosis

Catalytic Converter System

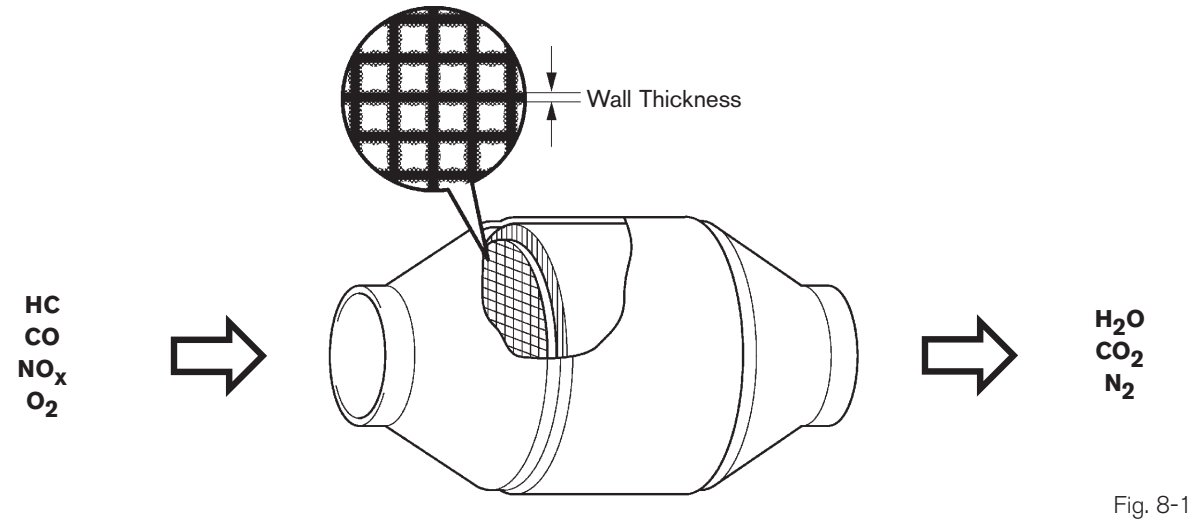

Fig. 8-1

TL874f801

Overview

Catalytic converter failures generally fall in the category of physical damage or catalyst failure. Physical damage usually can be visually identified-cracks, dents, etc. Internally, the structure can be cracked, broken, or melted. Where high heat may have lead to catalyst failure, the engine and related systems need to be thoroughly checked.

Catalyst performance before OBD II was determined differently in many states by test equipment. OBD II systems can determine catalyst performance. Performance deteriorates in many cases when the catalyst becomes coated with foreign materials. Contaminated fuel, sealants, or coolant can all affect catalyst performance.

The sub (S2) O2 sensor is used to adjust the oxygen level in the catalytic converter to achieve the best catalytic converter efficiency possible. As a catalytic converter deteriorates, its ability to store oxygen is also reduced. During conversion, the stored oxygen is rapidly depleted. The sub O2 sensor detects this and, within a very limited range, the ECM will reduce the amount of fuel injected providing more oxygen to converter. Oxygen levels build up, driving the O2 signal downward. At a predetermined point, fuel control will return to stoichiometric A/F Ratio. When this happens, oxygen again will be depleted driving the sub O2 signal upward, and the cycle will repeat itself. The rate at which this cycle repeats depends on how much of the catalyst has deteriorated, engine load, and the amount of correction as determined by the ECM's fuel control programming.

NOTE

- Fuel control by the sub O2 sensor is a very fine adjustment. Its affect on fuel trim and driveability is extremely limited.
- The cycling of the sub O2 sensor signal is NOT to produce an averaging of exhaust gases to achieve stoichiometry.
- The affect on the A/F sensor is practically impossible to see on the Diagnostic Tester because of the slow data rate, and the speed of fuel correction. The sub O2 response is slower because of the catalytic action and the fact it is an O2 sensor.
- The ECM on an A/F sensor equipped engine does try hold the A/F sensor signal at a constant level, but with these sensors there is hysteresis taking place. In other words there is some variation in the signal. This should not be confused with the cycling action found with fuel control programs used with O2 sensor equipped engines.
- The specification for the sub O2 sensor signal frequency to set a DTC is going to vary with the certification level of the vehicle- LEV, ULEV, SULEV.

It is important to determine why the catalytic converter failed before replacing it.

NOTE

Catalyst deterioration is determined by monitoring the amount of oxygen in the exhaust stream after the catalytic converter. The actual level of emission gases in the tailpipe is not monitored.

Catalytic Converter Monitor

The diagnostic system measures the oxygen storage capacity of the catalyst. This is based on the correlation between catalyst conversion efficiency and oxygen storage capacity. Catalyst efficiency is monitored by comparing the pre-catalyst O2 or A/F sensor output signal with the signal received from the post-catalyst O2 sensor. The ECM uses voltage variations between these sensors to measure the catalyst performance.

When the converter is operating properly, the post-catalyst sensor is significantly less active than the pre-catalyst sensor. This is because the converter stores and releases oxygen as needed during its reduction and oxidation processes, thus the post-catalyst sensor is exposed to exhaust gases with very little variation in oxygen levels.

O2 Waveform Normal Operation

Catalyst efficiency is monitored by comparing the pre-catalyst O2 or A/F sensor output signal with the signal received from the post-catalyst O2 sensor.

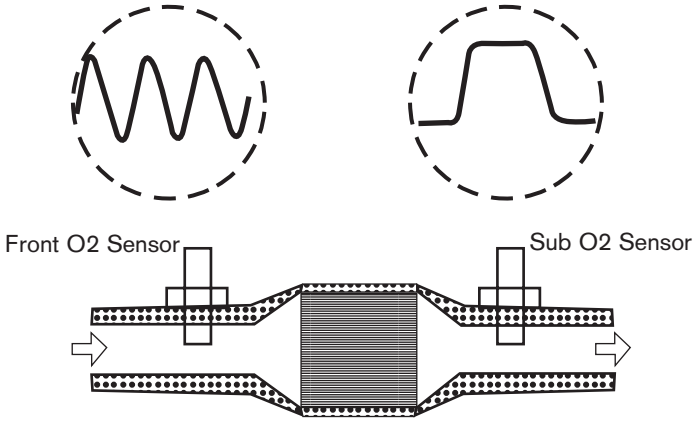

O2 Sensor waveform with ordinary catalyst

Fig. 8-2

TL874f802

Main O2 vs. Sub O2 Signal

The sub-sensor signal will make slow transitions in voltage, however, they occur over long periods of time (several seconds). The sub-sensor signal from a catalytic converter that is not functioning properly will have a pattern with a frequency and amplitude similar to the main O2 sensor.

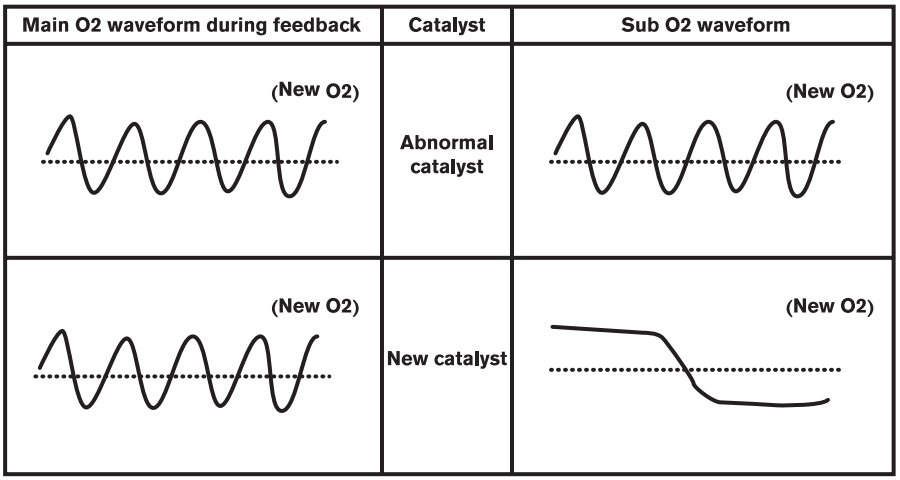

Fig. 8-3

TL874f803

A/F Sensor vs. Sub O2 Signal

Catalyst efficiency is monitored by comparing the pre-catalyst A/F sensor output signal with the signal received from the post-catalyst O2 sensor. The A/F sensor signal does not switch in the same manner as the O2 sensor, therefore the signal will reflect less activity. When the vehicle is accelerated under load with a bad catalytic converter, there will be excess oxygen passing through the converter lowering the sub O2 sensor signal.

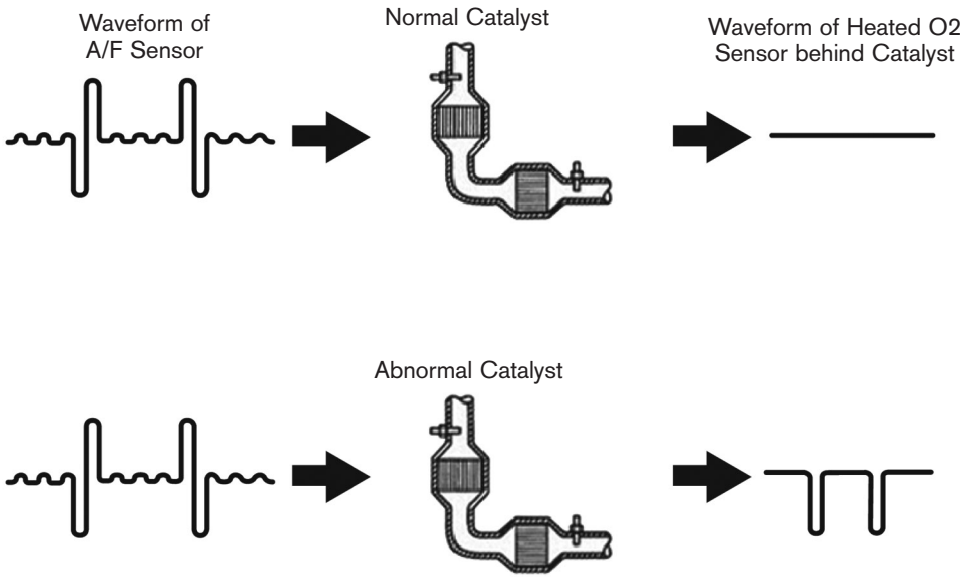

Fig. 8-4

TL874f804

NOTE After the engine and catalyst are warmed up and the conditions listed are met, the ECM will run the catalyst monitor. Catalyst warm-up is determined by a calculation in the ECM's internal programming. Engine load, engine coolant temperature, and time are the primary factors used to determine catalyst temperature.

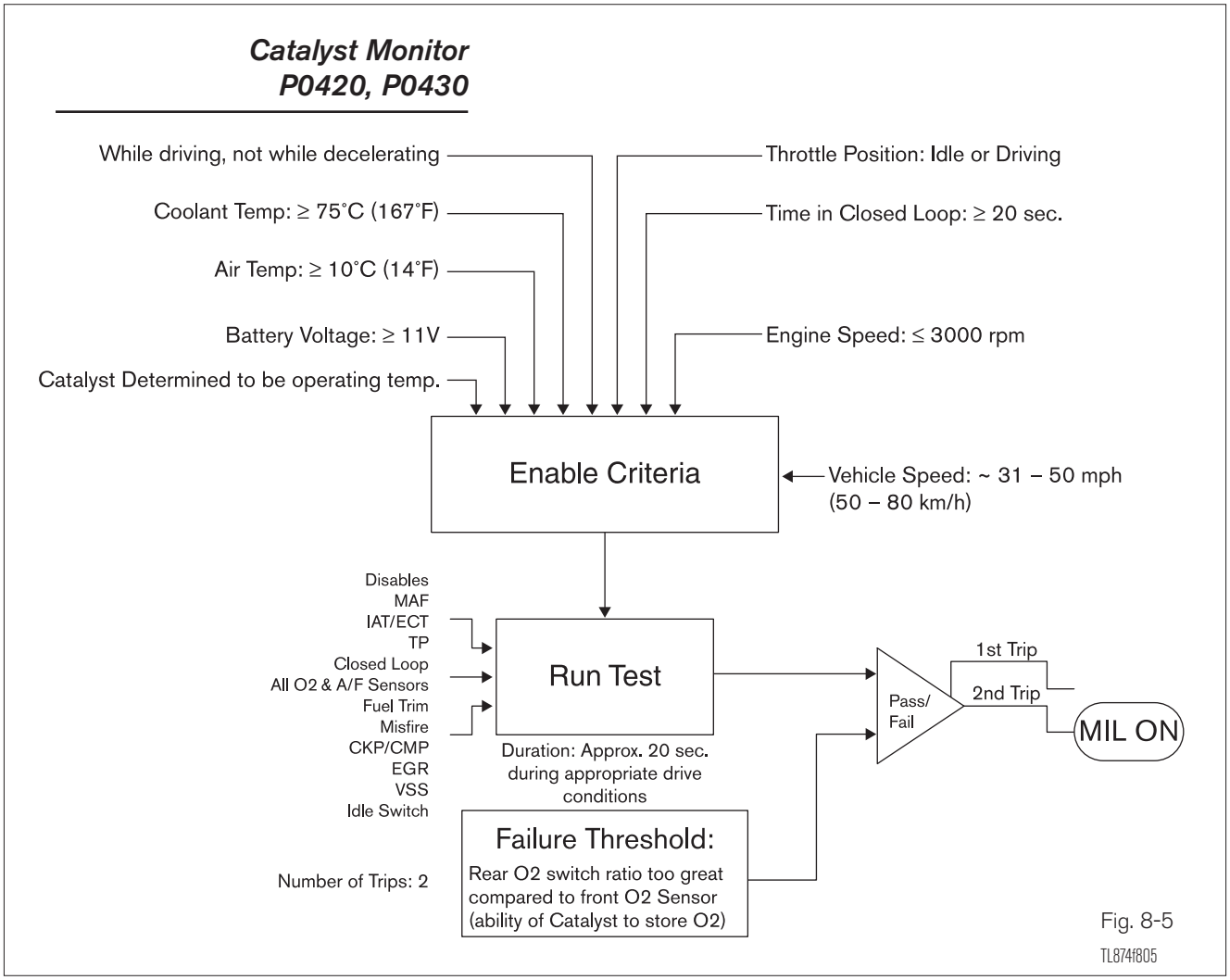
Catalyst Monitor
P0420, P0430
While driving, not while decelerating
Coolant Temp: ≥ 75˚C (167˚F)
Air Temp: ≥ 10˚C (14˚F)
Battery Voltage: ≥ 11V
Catalyst Determined to be operating temp.
Throttle Position: Idle or Driving
Time in Closed Loop: ≥ 20 sec.
Engine Speed: ≤ 3000 rpm
Enable Criteria
Vehicle Speed: ~ 31 – 50 mph
(50 – 80 km/h)
Disables
MAF
IAT/ECT
TP
Closed Loop
All O2 & A/F Sensors
Fuel Trim
Misfire
CKP/CMP
EGR
VSS
Idle Switch
Run Test
Duration: Approx. 20 sec.
during appropriate drive
conditions
Pass/
Fail
1st Trip
2nd Trip
MIL ON
Failure Threshold:
Rear O2 switch ratio too great
compared to front O2 Sensor
(ability of Catalyst to store O2)
Number of Trips: 2
TL874f805

Fig. 8-5

Confirmation Engine Racing Pattern

The Repair Manual provides special driving or engine racing patterns to confirm the operation of a sensor or system. The Repair Manual lists a pattern to be used for an O2 sensor equipped vehicle and another for an A/F sensor equipped vehicle. Use of these patterns may not complete a monitor. The monitor must complete to assure that no malfunctions are present.

Confirmation Engine Racing Pattern for O2 Sensor Equipped Vehicles

This pattern can be used to confirm catalyst operation, but does not complete the monitor. The monitor must complete to assure no malfunctions are present.

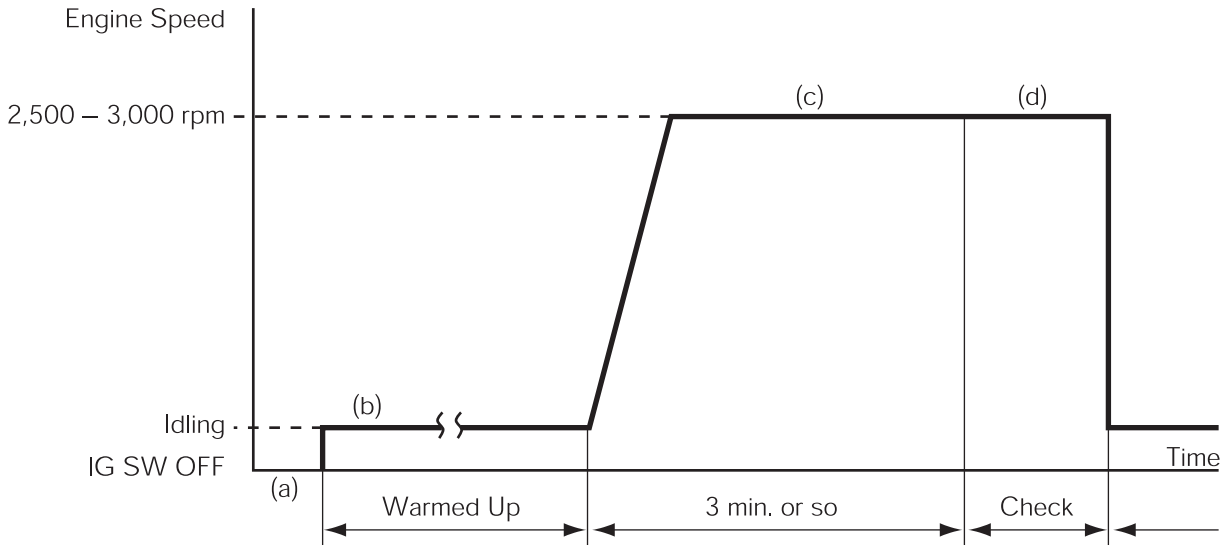

Fig. 8-6

TL874f806

Confirmation Engine Racing Pattern for A/F Sensor Equipped Vehicles

This pattern can be used to confirm catalyst operation, but does not complete the monitor. The monitor must complete to assure no malfunctions are present.

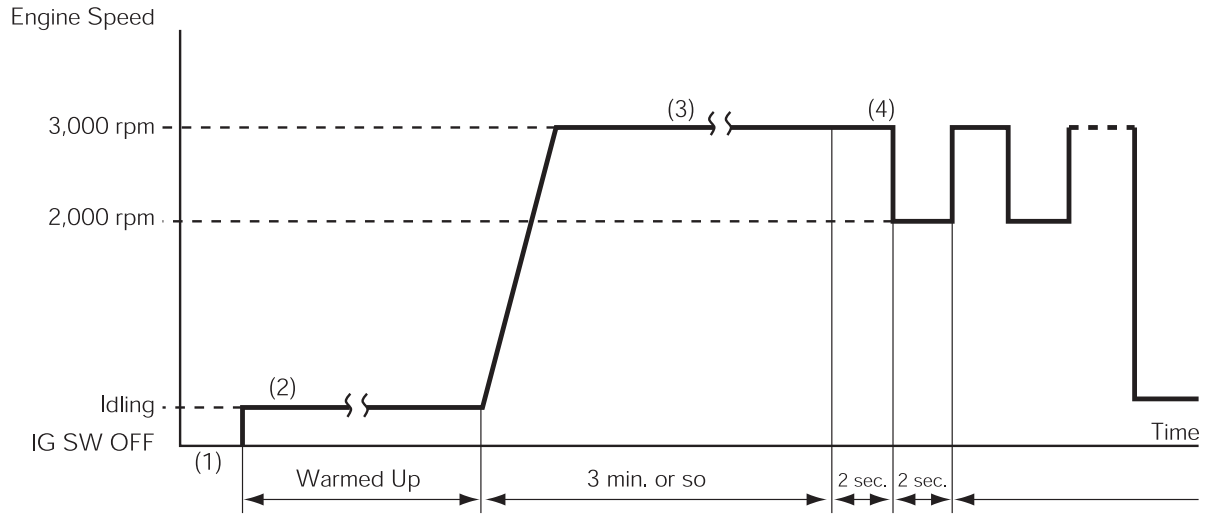

Fig. 8-7

TL874f807

Catalyst Efficiency DTC

P0420: Catalyst System Efficiency Below Threshold

After the engine and catalyst are warmed up, and while vehicle is being driven within set vehicle and engine speed range, the waveform of the heated O2 sensor (bank 1 sensor 2) alternates in a like frequency with the (bank 1 sensor 1).

Notes

WORKSHEET 8-1
Catalytic Converter Monitor

Vehicle	Year/Prod. Date	Engine	Transmission

Worksheet Objectives

Determine the condition of the catalytic converter based on data and engine symptoms and determine appropriate repair.

Tools and Equipment

- Vehicle
- Vehicle Repair Manual, EWD, & NCF
- Diagnostic Tester
- Hand Tools, Fender Covers, Floor Mats, and Shop Towels

SECTION 1: Front O2/Sub O2 Equipped Vehicles

1. Connect Diagnostic Tester, go to DATA LIST and select O2 B1S1, O2 B2S1, O2 B1S2, O2 B2S2 sensors.

2. Start the engine, and with the engine warmed up and in closed loop observe O2 B1S1, O2 B2S1, O2 B1S2, O2 B2S2 sensors. Use the graphing function.

3. What is the frequency of the front O2 S1 sensor(s) compared with sub O2 S2 sensor(s)?

_____

4. Momentarily perform a stall test. What happened to both sensors? Is it normal?

_____

5. Would the sub O2 voltage signal go high or low with a misfiring cylinder?

_____

6. Disconnect an injector. Note the result of the sub O2 sensor signal.

_____

7. Would the sub O2 voltage signal go high or low with a rich mixture?

_____

8. Go to INJECTOR VOL ACTIVE TEST and richen the mixture. Note the result of the sub O2 sensor signal.

_____

9. Complete the sentence. DTC P0420 is set when the sub O2 sensor signal frequency

_____

SECTION 2: Front AF Sensor(s)/Sub O2 Equipped Vehicles

Front O2/Sub O2 equipped vehicles

1. Connect Diagnostic Tester, go to DATA LIST, A/F B1S1, A/F B2S1, O2 B1S2, O2 B2S2 sensors.

2. Start the engine, and with the engine warmed up and in closed loop observe A/F B1S1, A/F B2S1, A/F B1S2 sensors

3. What is the frequency of the front A/F S1 sensor(s) compared with sub O2 S2 sensor(s).

_____

4. Momentarily perform a stall test. What happened to both sensors? Is it normal?

_____

5. Would the sub O2 voltage signal go high or low with a misfiring cylinder?

_____

6. Disconnect an injector. Note the result of the sub O2 sensor signal.

_____

7. Would the sub O2 voltage signal go high or low with a rich mixture?

_____

8. Go to INJECTOR VOL ACTIVE TEST and richen the mixture. Note the result of the sub O2 sensor signal.

_____

9. Complete the sentence: DTC P0420 is set when the sub O2 sensor signal

_____

10.How will you know if the catalytic converter monitor passed or failed in one trip?

_____

_____

11.How many trips will it take for P0420 to set?

_____

12.Will DTCs P0420 set a Freeze Frame?

_____

Notes

Catalytic Converter Monitor

Name: _____ Date: _____

Review this sheet as you are doing the worksheet. Check each category after completing the worksheet and instructor presentation. Ask the instructor if you have questions. The comments section is for you to write where to find the information, questions, etc.

Topic	*I have questions*	*I know I can*	Comment
Determine the condition of the catalytic converter based on data and engine symptoms and determine appropriate repair			

Notes

Section 9

Exhaust Gas Recirculation (EGR) System Diagnosis

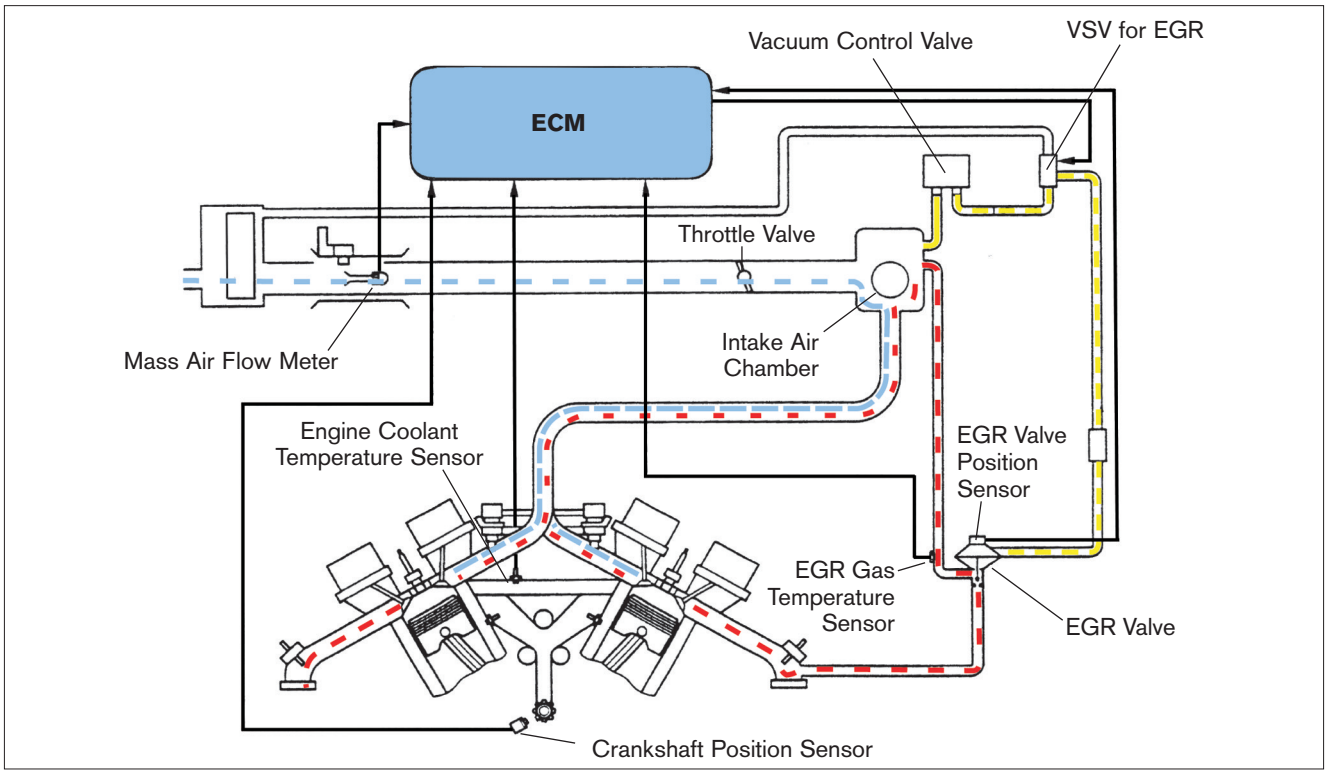

1. Determine the condition of the EGR system based on OBD II data and monitors and engine symptoms.
2. Describe the different types of EGR monitors.

Notes

Section 9

Exhaust Gas Recirculation (EGR) System Diagnosis

Basic EGR System

Exhaust gases are directed to the intake manifold to lower oxides of nitrogen emissions.

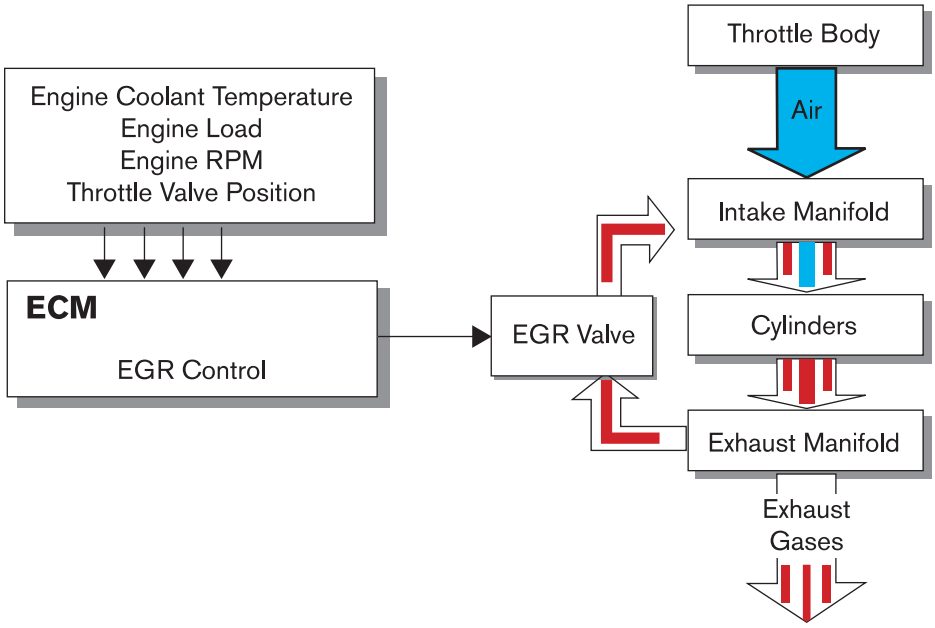

Fig. 9-1

TL874f901

Overview

Though the EGR system is used for knock control and to control oxides of nitrogen emissions, the EGR system is monitored because a failure in this system will affect hydrocarbon emissions.

Exhaust Gas Recirculation (EGR) System Monitors

The EGR monitor is designed to detect insufficient or excessive EGR flow and component performance. When the EGR valve is open, the ECM confirms that exhaust gas is flowing. When the EGR valve is shut off, the ECM confirms exhaust gas flow has stopped. The sensors are also monitored for open, shorts, and performance.

NOTE

Lexus uses the EGR valve position/temperature detection method for monitoring the EGR system.

EGR Monitor P0401, P0402

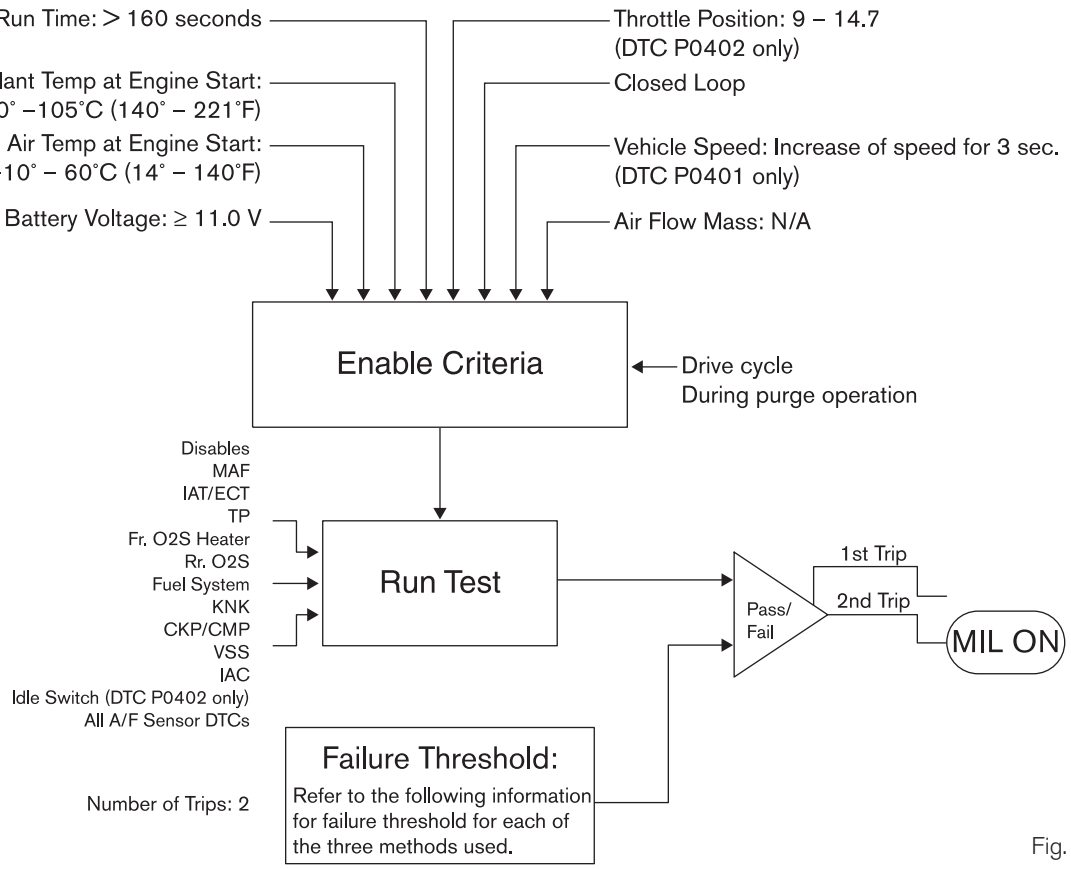

Fig. 9-2

TL874f902

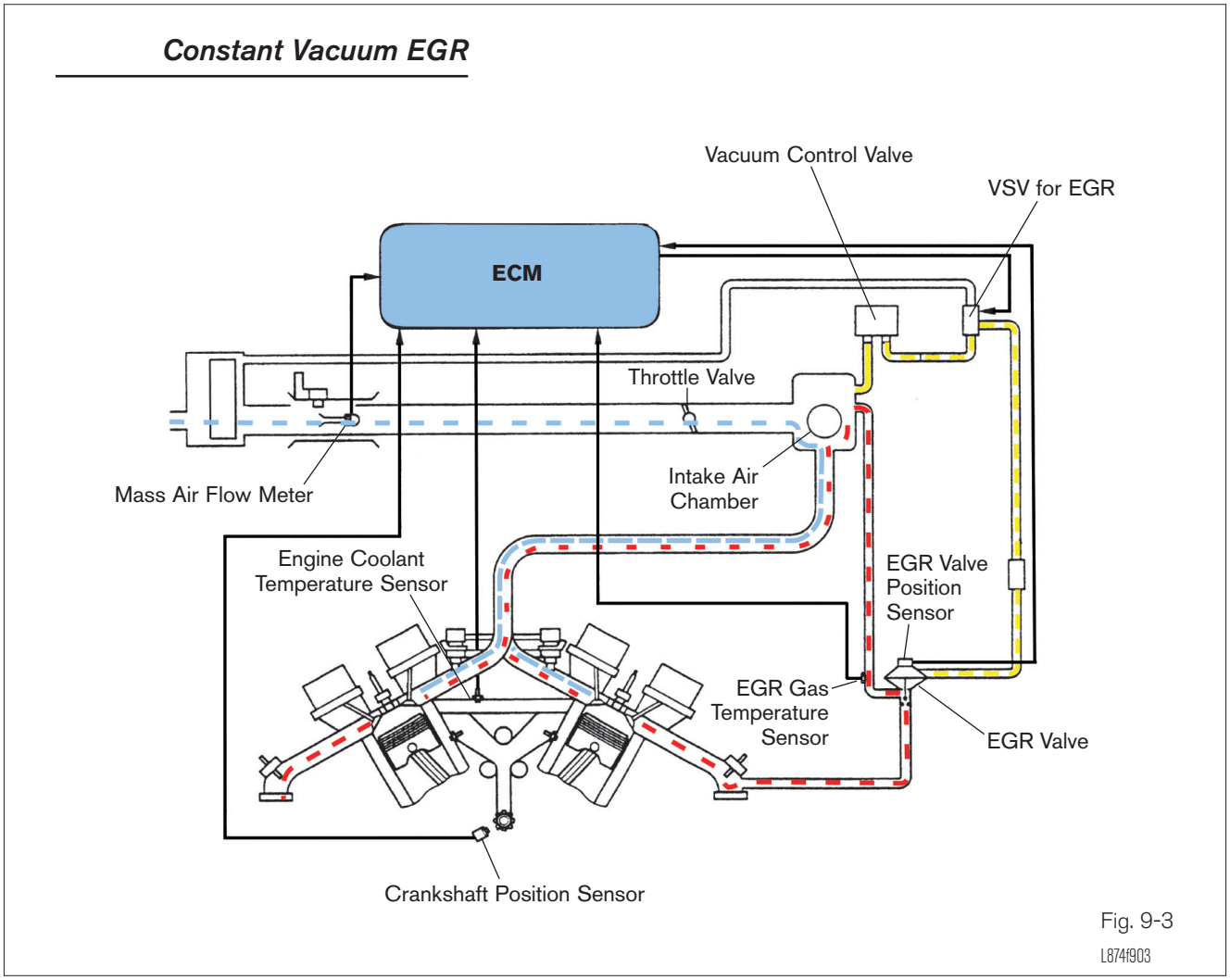

EGR Valve Position/ Temperature Detection Method

This method uses a temperature sensor for insufficient EGR flow and an EGR Valve Position sensor for excessive EGR flow on the Constant Vacuum EGR system

P0401: Insufficient Flow

When the EGR valve is open, the ECM compares EGR temperature to intake air temperature. If the temperature does not rise a specified amount over ambient temperature, the ECM assumes there is a problem in the system, and this information is stored in the ECM. If the problem occurs on the second trip, DTC P0401 will set and the MIL will turn on.

P0402: Excessive Flow

The ECM uses the EGR valve height position sensor to detect excessive flow. When the EGR is off and the sensor signal is greater than the specification stored in the ECM, the ECM assumes the EGR valve did not close. If the problem occurs on the second trip, DTC P0402 will set and will turn the MIL on.

Notes

WORKSHEET 9-1
EGR Monitor

Vehicle	Year/Prod. Date	Engine	Transmission

Worksheet Objectives

Investigate how the ECM monitors the EGR system based on OBD II data and monitors and engine symptoms. Determine when the EGR system is not working properly.

Tools and Equipment

- Repair Manual
- Vehicle EWD
- Diagnostic Tester
- DVOM
- Hand Tool Set with Vacuum Pump

SECTION 1: Constant Vacuum EGR Detection System P0401/P0402

1. Disconnect EGR valve vacuum hose, and connect a handheld vacuum pump.

2. Connect Diagnostic Tester, go to DATA LIST, EGR POSITION SENSOR and EGR TEMPERATURE SENSOR.

   Record EGR Position Sensor and EGR Temperature Sensor signal: _____

3. Apply vacuum according to the chart below and record EGR Position Sensor at each point.

0 in. Hg	1.0 in. Hg	1.5 in. Hg	2.0 in. Hg

   What happened to the EGR Position Sensor signal?

   _____

4. Remove vacuum from the EGR valve.

5. Start the engine and bring it to operating temperature.

   Record EGR Position Sensor and EGR Temperature Sensor signal: _____

6. Apply vacuum to the EGR valve so that the engine starts to misfire.

   Record EGR Position Sensor and EGR Temperature Sensor signal: _____

7. Remove vacuum from the EGR valve. Did the EGR Position Sensor return to its original position?

   _____

8. What sensor does this system use to detect if the EGR valve opened?

   _____

9. How does ECM know the EGR valve failed to open?

   _____

10. What sensor does this system use to detect if the EGR valve closed?

    _____

11. How does ECM know the EGR valve failed to close?

    _____

SECTION 2

1. List three items that could prevent the EGR valve in a Constant Control Vacuum System from opening.

   _____

   _____

   _____

2. List three items that could prevent the EGR valve in a Constant Control Vacuum System from closing.

   _____

   _____

   _____

3. How will you know if the EGR monitor passed or failed in one trip?

_____

_____

4. How many trips will it take for P0401/P0402 DTCs to set?

_____

5. Will DTCs P0401/P0402 set a Freeze Frame?

_____

Notes

EGR Monitor

Name: _____ Date: _____

Review this sheet as you are doing the worksheet. Check each category after completing the worksheet and instructor presentation. Ask the instructor if you have questions. The comments section is for you to write where to find the information, questions, etc.

Topic	*I have questions*	*I know I can*	Comment
Locate components using the EWD and RM			
Find wire colors, pin numbers using the EWD and RM			
Set the conditions for the test			
Determine of the condition of the EGR system by using Readiness Tests			
Describe the different types of EGR monitors			
Test EGR Valve Position Sensor and compare to specs. to determine condition			

Notes

Additional Systems

Thermostat Monitor

This monitor checks for the coolant temperature to rise to a minimum temperature of 75°C (167°F). When the coolant temperature is less than a predetermined value at engine start, the THW value is monitored during the first portion of the LA#4 driving cycle. The thermostat monitor phase began with the 2000 model year and will be complete with the 2002 model year.

Thermostat Monitor P0128

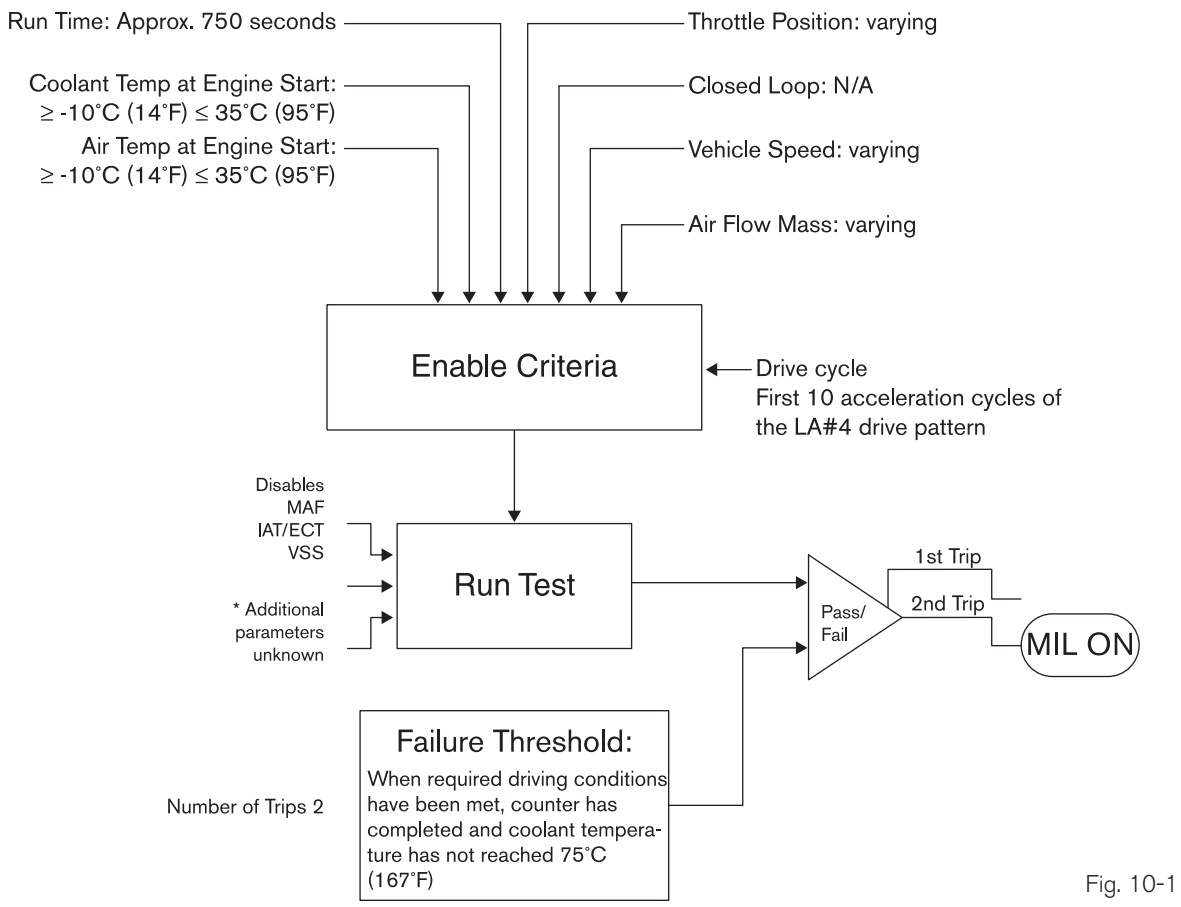

Fig. 10-1

TL874f1001

Thermostat Monitor DTC P0128

This chart shows the rise in coolant temperature during the LA#4 drive pattern. The water temperature counter is also shown. Note the point at which the ECM checks for abnormality (improper coolant temperature).

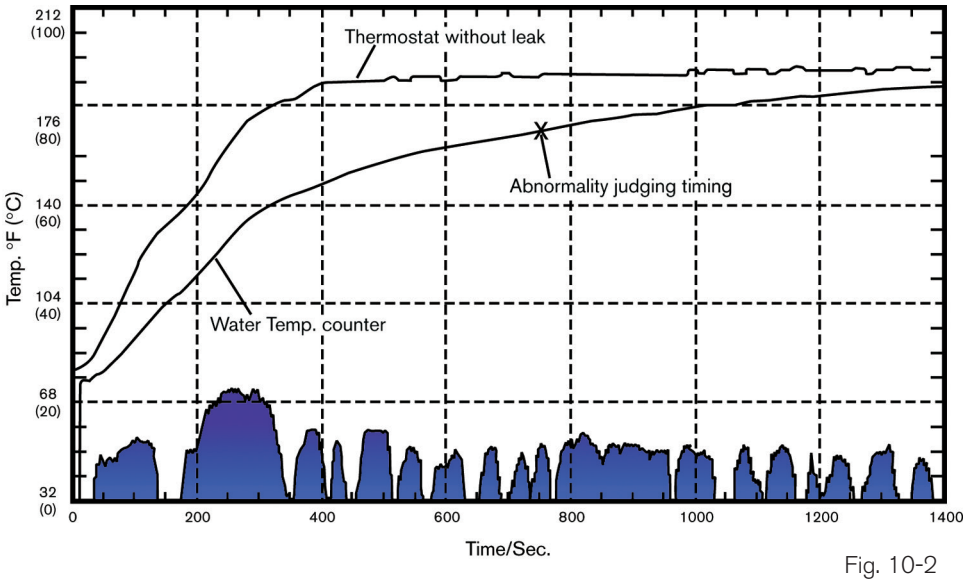

Fig. 10-2

TL874f1002

Thermostat Monitor DTC P0128 Thermostat Malfunction

When:

- coolant temperature at engine start is > -10°C (14°F) < 35°C (95°F)
- air temperature at engine start is > -10°C (14°F) < 35°C (95°F)
- during specified driving pattern and time period
- coolant temperature has not reached 75°C (167°F)

Section 11

ECM Diagnosis

Overview

The ECM is rarely the cause of a problem. If the ECM needed to be replaced, it was often because of a change in calibration. Now, ECMs can be reprogrammed and replacement under these conditions is no longer necessary.

Still, nearly all troubleshooting procedures involve checking all systems and subsystems connected to the ECM. Additionally, with multiplexing, there are more ECUs connected to the ECM that need to be checked.

Presently, there are some DTCs that are directly associated with the ECM.

P0605: The Internal Control Module Read Only Memory Error, is displayed when the ECM has detected a problem in the read only memory area. At the time of this publication, when this DTC is displayed the ECM must be replaced.

P1600: ECM BATT malfunction is stored when there is no power to the BATT terminal of the ECM. Battery voltage is supplied to the BATT terminal even when the ignition switch is OFF. The ECM uses this power for memory and adaptive memory values such as A/F Ratio control. If DTC P1600 is displayed, the ECM does not store another DTC. The BATT circuit must be checked and confirmed normal before replacing the ECM.

P1633: ECM Malfunction (ETCS Circuit), is stored when the ECM detects an internal problem with the electronic throttle control circuit. At the time of this publication, when this DTC is displayed the ECM must be replaced.

Trouble-shooting the Diagnostic Circuit

On rare occasions, you will find that the Malfunction Indicator Lamp or the Diagnostic Tester fails to operate properly. The following information is designed to help you determine a diagnostic course of action when you encounter this situation.

Malfunction Indicator Lamp Check

Before connecting your Diagnostic Tester it is important to confirm that the Malfunction Indicator Lamp (MIL) is functioning normally. A bulb check of the MIL is performed when the ignition is switched ON. If the MIL does not illuminate, it indicates that a problem exists in the MIL sub-system. This condition must be corrected before any further diagnostic work can be performed. See the diagnostic procedures for inoperative MIL in the repair manual.

Once the engine is started the MIL should turn off. If the MIL remains on after the engine is running, the diagnostic system has detected a problem in the engine control system.

Failure of Diagnostic Tester to Establish Communications with ECM

After MIL operation is confirmed, connect the Diagnostic Tester to the appropriate DLC and program for the on-board diagnostic system supported by the vehicle. Once the tester is programmed for the correct vehicle and diagnostic system, you should be able to display an ALL DATA LIST.

If any of the following messages are received you must correct this condition before proceeding with troubleshooting:

- NO COMMUNICATION WITH VEHICLE
- UNABLE TO CONNECT TO VEHICLE
- OBD II COMMUNICATIONS TIME OUT

There are several possibilities when the Diagnostic Tester fails to communicate with the vehicle. The problem could simply be the way you programmed the tester, or connecting to the wrong DLC. Once you have confirmed correct programming and proper lead connection, you will need to establish whether the problem is in the tester or the diagnostic circuit

To isolate a tester problem from a vehicle problem, simply try the tester on another vehicle. If the tester communicates normally with another vehicle, it is probably O.K. and the vehicle diagnostic system must be inspected.

DLC3 (OBD II) Connector

The vehicle's ECM uses the ISO 9141-2 communication protocol. The terminal arrangement of DLC3 complies with SAE J1962 and matches the ISO 9141-2 format.

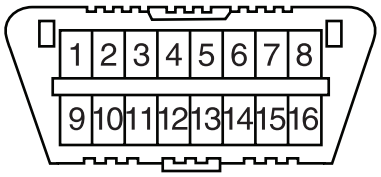

DLC3

Terminal No.	Connection/Voltage or Resistance	Condition
7	Bus ⊕ Line/Pulse generation	During Transmission
4	Chassis Ground ↔ Body Ground/1 Ω or less	Always
5	Signal Ground ↔ Body Ground/1 Ω or less	Always
16	Battery Positive ↔ Body Ground/9 – 14V	Always

Fig. 11-1
TL874f1101

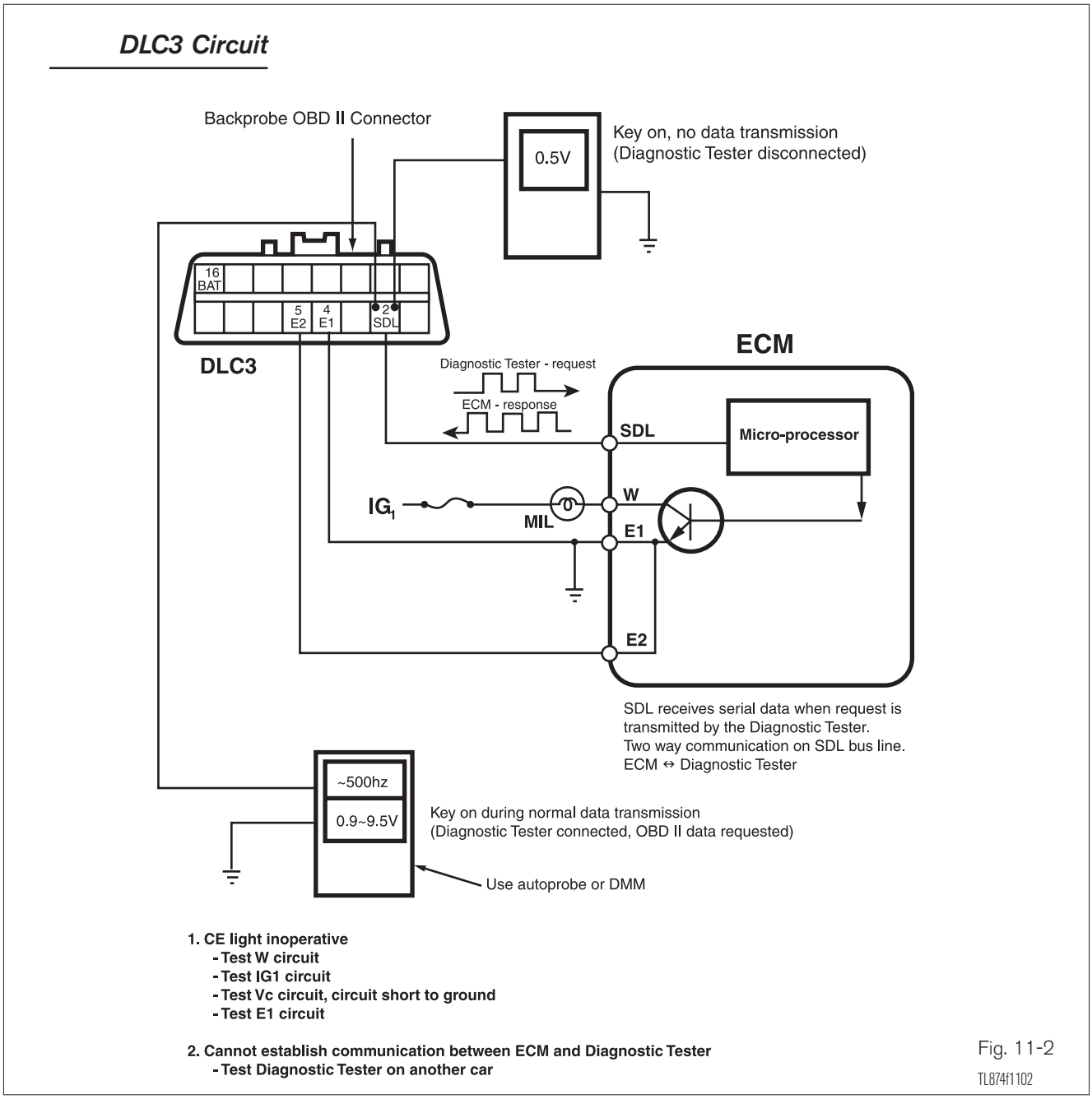

Fig. 11-2

Inspection of the OBD II Diagnostic Circuit

The OBD II diagnostic circuit is shown in the schematic. DTC functions, serial data, active test functions, and all OBD II functions are communicated across the SDL (Serial Data Link) circuit. The Diagnostic Tester initiates communication by sending a data request signal to the ECM on the SDL circuit. The ECM will respond by sending a Variable Pulse Width signal back to the tester.

DTC(s) and all data are transmitted to the Diagnostic Tester on the SDL wire in the form of serial data. The tester monitors this Variable Pulse Width signal, translates the signal, and displays the data or DTC(s). As with the OBD system, if the microprocessor develops a problem, the Diagnostic Tester will not function and the MIL will not illuminate at bulb check.

- Troubleshoot Communication Failure Between ECM and Diagnostic Tester
- Disconnect the tester and inspect the following circuits at DLC3
- Check terminal SDL (pin #2) for approximately 5 volts DC with ignition on, if not:
- Check for open or short to ground in SDL circuit
- Check for good continuity between El (pin #4) and -B at the battery (< lΩ)
- With Diagnostic Tester connected to DLC3, CARB or ENHANCED OBD II data requested
- Backprobe SDL terminal with digital multimeter; should vary between 0.9V and 9.5V
- Backprobe SDL terminal with frequency counter; should indicate 500 hz ± 50 hz

HINT

If your display shows UNABLE TO CONNECT TO VEHICLE when you have connected the cable of the Diagnostic Tester to the DLC3, turned the ignition switch ON, and turned on the Diagnostic Tester, there is a problem on the vehicle side or tool side.

If communication is normal when the tool is connected to another vehicle, inspect the DLC3 on the original vehicle.

If communication is still not possible when the tool is connected to another vehicle, the problem is probably in the tool itself, so consult the Service Department listed in the tool's instruction manual.

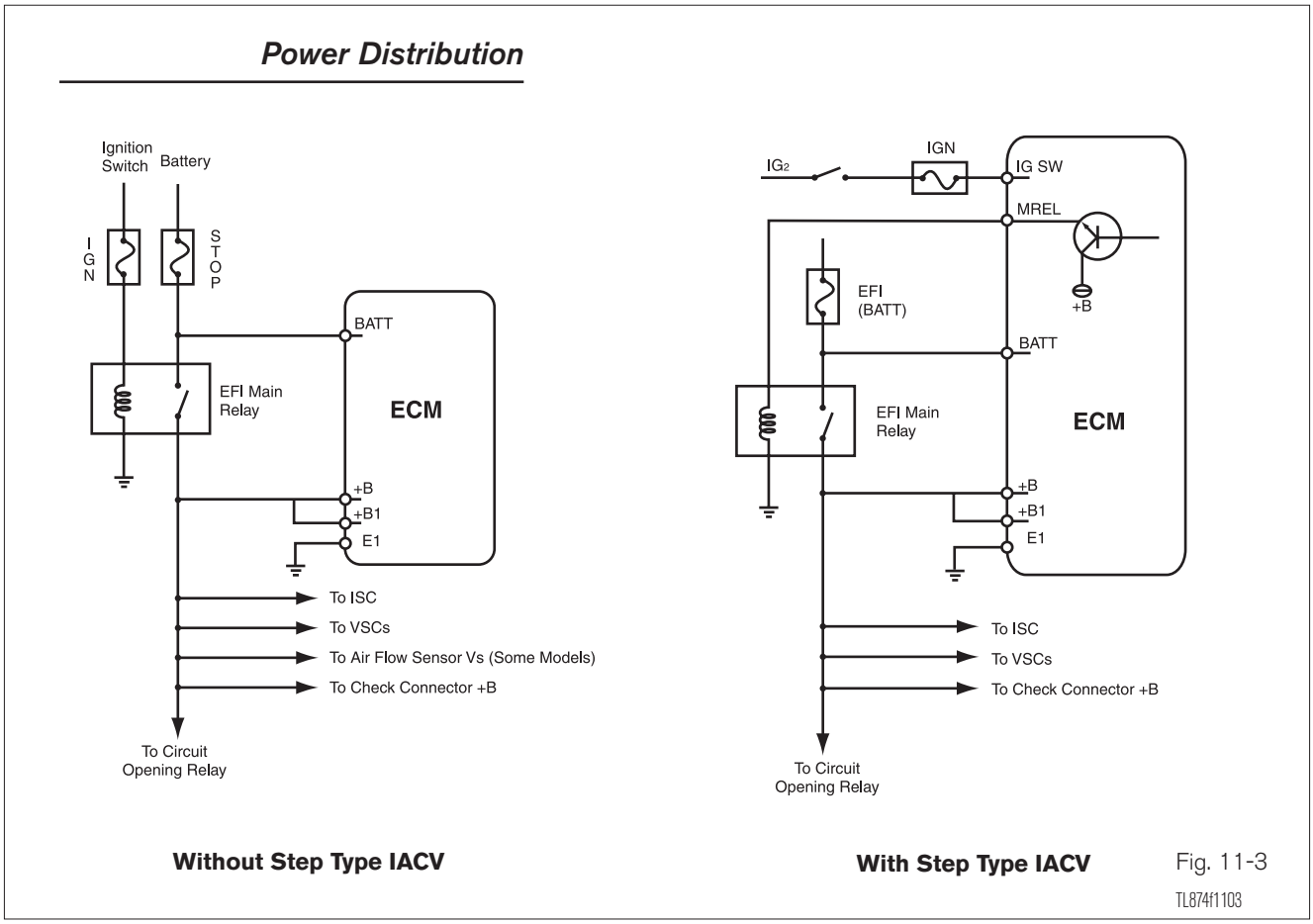

Fig. 11-3

TL874f1103

Power Distribution System

When the ignition is switched on, the engine control system is designed to power the ECM by energizing the Main Relay. The Main Relay supplies power to the ECM +B ignition feed circuits and all sub-system Vacuum Switching Valves (VSVs) and relays.

There are two basic types of Main Relay control circuits used on fuel injection engines:

- Without step type lAC: Uses a simple ignition switch controlled Main Relay. To energize the relay, current from the ignition switch flows through the Main Relay pull-in winding, to ground. This energizes the relay and powers all of the circuits mentioned above.

- With step type Idle Air Control (IAC): Uses an ECM controlled Main Relay. To energize the relay, the ECM monitors the IGSW input. When the ignition switch is turned to the ON position, current flows to the ECM through the IGSW circuit. This signals the ECM to send control current through the MREL circuit, through the Main Relay pull-in winding, to ground. This causes the relay power contacts to close, sending current to the ECM, all VSVs, and the Circuit Opening Relay.

Inspection

Circuit quick checks: If the MIL illuminates when the ignition is switched to the ON position, the Main Relay is functional and current is flowing to the ECM +B terminals. If the MIL does not illuminate, use a Voltmeter to monitor the +B terminal of DLC1.

If battery voltage is available at DLC1 +B terminal, the Main Relay is functional. Further circuit troubleshooting will be required to determine if current is flowing to the ECM consult the repair manual.

Circuit Inspection Using V-BoB: Inspect the following signals for behavior indicated above; +B, +B1, El, IGSW, MREL. Refer to the appropriate Repair Manual circuit inspection charts and to the Engine Control System schematic in the EWD for troubleshooting details.

ECU Reprogramming

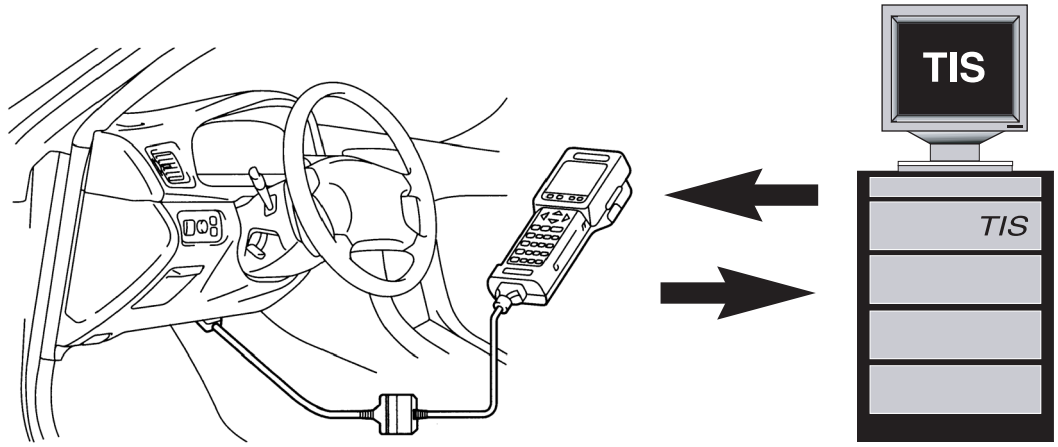

Fig. 11-4

TL874f1104

ECU Re-programming

Beginning with some 2001 model year vehicles, the ECM is capable of being reprogrammed. It is called ECU reprogramming because this procedure may be applicable for multiple processors.

This procedure allows the ECM to be updated on an as needed basis without replacement. A TSB will inform you which vehicles are to be re-programmed. TIS provides the needed re-programming information and procedure. To find the latest information, log on to TIS, go to DIAGNOSTICS, ECU FLASH REPROGRAMMING. In the ECU FLASH REPROGRAMMING section you will find the latest instructions, calibration programs, and vehicles requiring re-programming.

Here are some general guidelines:

- If a Recalibration Label is present, the vehicle has already been recalibrated and no further action is required.
- The ECU recalibration program is confirmed using the Diagnostic Tester.
- Check battery voltage. To avoid battery fluctuations while reprogramming the Engine ECU turn off all electrical accessories (i.e. radio, lights, interior fan). Confirm battery voltage is greater than 11.5V. Charge battery as necessary.

NOTE If battery voltage drops below 11.4V during ECU recalibration, damage to the Engine ECU will occur.

- Ensure that all electrical systems are turned off and doors and trunk are closed. Once the recalibration process has started, do not operate the doors or accessories.
- Recalibration can take up to 45 minutes. The length of time to reprogram will vary, depending on the type ECM and reprogram file.
- It may take up to 2 minutes for the progress bar to begin moving.

NOTE Do not move the Diagnostic Tester or cable during recalibration to prevent recalibration failures.

- Confirm that the new calibration has successfully installed.
- If applicable, attach a new calibration sticker.

WORKSHEET 11-1
ECU Reprogramming

Vehicle	Year/Prod. Date	Engine	Transmission

Worksheet Objectives

In this worksheet, you will become familiar with the procedure required to identify the vehicle calibration ID, search for updated calibrations, download calibrations from TIS, and using the Diagnostic Tester replace the vehicle ECM's calibration.

Tools and Equipment

- Vehicle
- Vehicle Repair Manual, EWD, & NCF
- Diagnostic Tester
- TIS Access
- Hand Tools, Fender Covers, Floor Mats, and Shop Towels

Step 1: Select Calibration ID from TIS

To upload the latest ECU calibration, use the Technical Information System and access the Calibration Update Wizard. Follow the instructions on the screen to down load the appropriate Calibration ID to the Diagnostic Tester.

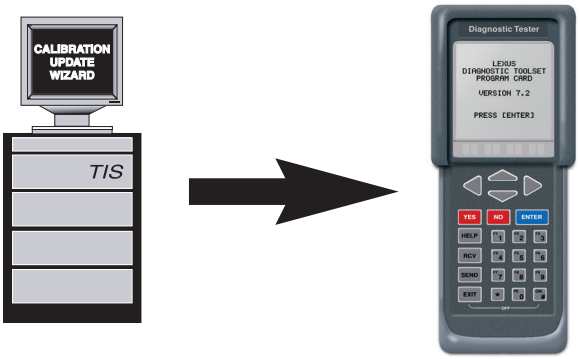

1. What two service publications could also contain a hyperlink to access the Calibration Update Wizard?

_____

2. When the Diagnostic Tester is turned ON and ECU RE-PROGRAMMING is selected the tester screen indicates that PC communication is "DISCONNECTED". What does "DISCONNECTED" mean?

3. Use the TIS to locate the new calibration for a vehicle designated by the instructor. What is the issue date?

4. What are the two CPU numbers and calibration IDs.

5. What are the new calibrations?

Step 2: Retrieve the Current Calibration ID from the Vehicle.

Use the Diagnostic Tester to check the current CAL ID stored in the vehicle ECM.

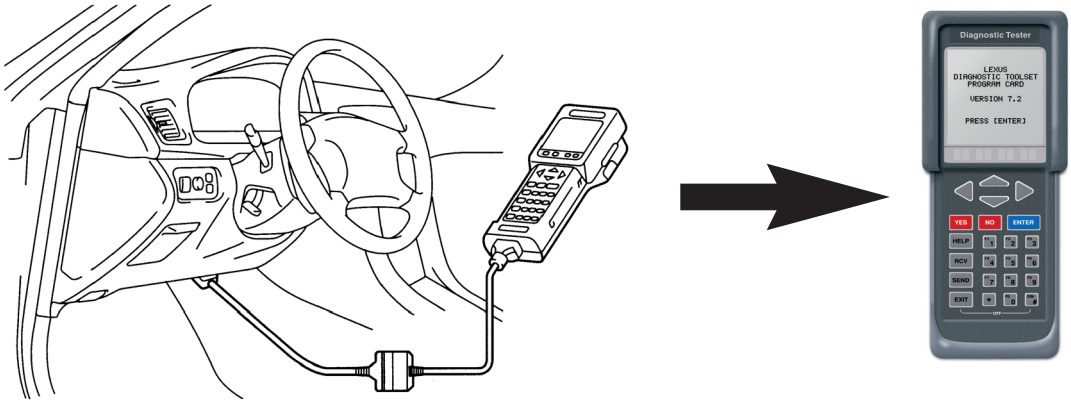

1. Identify the main menu selection to access the current ECU calibration

2. What are the current vehicle ECU calibration ID numbers?

Step 3: Install New Calibration ID

Use the Diagnostic Tester to update the ECU calibration.

1. What items must be confirmed prior to updating the ECU calibration?

_____

_____

_____

2. Match current calibration ID number with the new ID number. What calibration ID was matched?

_____

3. When reprogramming is interrupted, damage to the ECU is likely. If the ECU is damaged, what is the proper repair?

_____

4. Why would the electrical load precaution be important to the reprogramming procedure?

_____

_____

Step 4: Installing Second New Calibration IDs

1. How is the new calibration selected for reprogramming?

_____

Step 5: Verify New Calibration ID is Installed.

1. How can one ensure that the new calibration(s) have been installed?

_____

_____

_____

Notes

ECM Reprogramming

Name: _____ Date: _____

Review this sheet as you are doing the worksheet. Check each category after completing the worksheet and instructor presentation. Ask the instructor if you have questions. The comments section is for you to write where to find the information, questions, etc.

Topic	*I have questions*	*I know I can*	Comment
Diagnose ECM specific diagnostic trouble codes			
Locate fuses, relays, and grounds connected to the ECM using the EWD and RM			
Trace power flow to the ECM using the EWD and RM			
Test ECM power circuits and compare to specs. to determine condition			
Test ECM ground circuits and compare to specs. to determine condition			
Test DLC 3 circuits for continuity			
Describe precautions when handling the ECM			
Reprogram the ECU			

Notes

Appendix A

Glossary

A

Actuator – A mechanism for moving or controlling something indirectly instead of by hand. See also, output actuator.

Amplitude – As it applies to the electronic control system, the amount of voltage produced in an electrical circuit.

Autoprobe – A signal measurement device that when interfaced with the Diagnostic Tester Instrumentation Port can be used for voltage, frequency, duty cycle, and pulse width measurements. When interfaced with V-Bob, the Autoprobe provides signal input for oscilloscope functions.

B

Bank – The group of cylinders which feed an O2 sensor. Bank 1 always contains cylinder #1 (the cylinder closest to the front of the engine). Under the J1979 serial data standard, O2 sensor location is identified by bank (i.e. bank 1 and bank 2) and also by sensor number (i.e. sensor 1, sensor 2) where sensor 1 is the closest to the engine. The following is an example of this type of sensor location information.

On a 1MZ-FE engine, sensor B1, S1 indicates bank 1, sensor 1. This is the main O2 sensor on the right side of the engine (facing the front of the engine). Sensor B1, S2 indicates the sub-O2 sensor located on the right side exhaust.

Base Fuel Schedule (Basic Injection Quantity) – Fuel calibration schedule programmed into the ECM when the vehicle is manufactured. The base fuel schedule is the calculated fuel delivery for a given set of input parameters prior to any trim correction being added.

Baud Rate – The speed at which data can be transmitted over a serial data link, usually measured in "bits per second" (bps).

bps – bits per second. Units used for measurement of baud rate.

C

Calculated Load Value – refers to an indication of current airflow divided by (theoretical) peak airflow, where peak airflow is corrected for altitude (when this data is available). A unitless number that provides the technician with an indication of the percentage of engine capacity that is being used.

Catalyst – A substance that can increase or decrease the rate of chemical reaction between substances without being consumed in the process.

Circuit Level Diagnosis – A diagnostic decision, which confirms that a problem exists within a particular circuit. The circuit consists of the sensor, the ECM, and all related wiring.

Closed Loop (Engine) – An operating condition or mode, which enables modification of programmed instructions, based on a feedback system.

Continuous Monitoring – Sampling at a rate no less than two samples per second.

Cursor – The highlighted text or data on the display screen. Same as marker.

D

DLC – Data Link Connector. A connector provided for access to a vehicle's on-board diagnostic data and functions.

Data List – A preprogrammed list of information being transmitted from vehicle to Diagnostic Tester. Depending on the vehicle and system being tested, the Data List could have as few as 10 parameters or as many as 80.

Data Word – One complete parameter or piece of information transmitted on a serial data line.

Default – As it relates to an engine control system, the condition that a device will return to when it is not operation or when it fails. Take a normally closed (N/C) Vacuum Switching valve for example; when this type of VSV is operated by the ECM, it will open; however, in the event that this N/C device becomes disconnected or inoperative, it will revert to the closed position.

Diagnostic Tester – A handheld tester capable of reading and displaying serial data from the vehicle Data Link Connector (DLC).

Diagnositcs – The process of identifying the cause or nature of a condition, situation or problem to determine the corrective action in repair of automotive systems.

Driving Cycle – Engine start-up, vehicle operation beyond the beginning of closed loop operation, and engine shut down.

Duty Ratio – The duty ratio is the percentage of time during one complete cycle that electrical current flows. A high duty ratio, 90% for example, means that current flow is on longer than it is off. A low duty ratio, 10% for example, means that current flow is off longer than it is on. A duty ratio of 50% would be on half of the time and off half of the time.

E

Engine Misfire – Lack of combustion in a cylinder due to the absence or inadequacy of spark, fuel metering compression, or any other cause.

F

Final Injection Quantity – The final delivery calculation after all corrections have been made for variables like temperature and battery voltage.

Frequency – Number of times every second an alternating current goes through a complete cycle. Measured in the unit Hertz (Hz).

Fuel Trim – Feedback adjustments to the base fuel schedule. Short-term fuel trim refers to dynamic or instantaneous adjustments. Long term trim refers to a more gradual adjustment to the fuel calibration schedule. Long-term trim adjustments compensate for differences between vehicles and/or changes in the vehicle, which occur over time.

Freeze Frame – A single frame of stored data, representing data parameters at the moment a fault is stored.

H

Hard Fault – A circuit fault, which is not intermittent, like a broken wire or faulty sensor.

Hz – Hertz. A unit of measurement for frequency.

I

Intermittent Fault – A circuit fault, which only happens occasionally. It sometimes can be duplicated and sometimes it cannot.

Injection Pulse Width – The amount of time the ECM switches a fuel injector to ground, allowing fuel to be delivered to the intake manifold. Pulse width is typically measured in the number of milliseconds that the fuel injector delivers fuel to the intake manifold. Also referred to as injection duration.

Injection Duration – The amount of time a fuel injector is energized or on. With a fixed fuel pressure differential across the injector, increases in injector duration to cause a proportionate amount of additional enrichment.

Instrumentation Port (I/P) – Terminal located on the bottom of the Diagnostic Tester for connection with V-Bob, Autoprobe, and NVH analyzer.

K

Keep Alive Memory – A battery powered memory location in the ECM, which allows the microprocessor to store information about the system-input failures. This information, which is stored during normal operation of the vehicle, is not erased from the ECM memory until the BATT feed to the ECM is disconnected for more than 30 seconds. Also referred to as Non-Volatile Ram (NVRAM).

L

Learned Voltage Feedback (LVF) – Fuel injection correction coefficient which tailors the standard fuel injection duration to minor differences between engines due to manufacturing tolerances, mechanical wear, and minor mixture disturbances like small vacuum leaks. This coefficient is capable of altering the calculated injection duration (before O2 sensor correction) by as much as 20% to prevent O2 sensor corrections from becoming excessive.

Look Up Table – A data table stored in a computer memory, which is used to look up information for an engine control system.

M

Malfunction – The inability of an emission related component or system to remain within design specifications. For OBD II purposes, the deterioration of a component or system to a degree that would likely cause the emissions of the vehicle to exceed 1.5 times its original design standards.

Microprocessor – A set of integrated circuits that can be programmed with stored instructions to perform given functions. Also called a microcomputer, this device consists of a central processing unit (CPU), a read only memory (ROM), and a random access memory (RAM).

O

O2S Response Rate – The delay, measured in milliseconds, between a switch of the sensor from lean to rich or vise versa, in response to a change in A/F Ratio above and below stoichiometric (14.7:1 AFR).

OBD – The first generation of on-board diagnostic capabilities for gasoline powered automobiles and light trucks mandated by the California Air Resources Board (CARB). Phased-in during the 1988 model year.

OBD II – The second generation of on-board diagnostic capabilities for gasoline powered automobiles and light trucks mandated by the California Air Resources Board (CARB). Implemented during the 1994 - 1996 model years.

Open Loop – An operating condition or mode based on programmed instructions and not modified by a feedback system.

Output Actuator – A device, which performs a mechanical action, based upon an electrical signal. See also, actuator.

P

Potentiometer – A three-wire electrical device that can vary the amount of resistance placed in an electrical circuit by sliding an electrical contact along a fixed resistor.

Pounds per Square Inch, Absolute (PSIA) – Pressure readings, which are not corrected for atmospheric pressure. At sea level, a PSIA calibrated gauge would read 14.7 pounds per square inch when sampling ambient pressure. Intake manifold pressure is typically measured on the absolute scale.

Pounds per Square Inch, Gauge (PSIG) – Pressure readings, which are corrected back to zero for atmospheric pressure. At sea level, a PSIG calibrated gauge would read zero pounds per square inch when sampling ambient pressure. Fuel pressure is typically measured on the gauge scale.

Power Transistor – The electronic switch inside an igniter assembly, which turns primary current on, and off. Designed to carry large amounts of current flow and dissipate large quantities of heat.

Programmable Read Only Memory (PROM) – Part of a microprocessor or computer in which instructions or data are semi-permanently located. PROM data can be changed (like RAM) but are not volatile memory (they do not erase when power is removed, but are permanently configured as part of the electronic circuit).

Pull-up Resistor – The first resistor (of fixed value) in a two-resistor series circuit, which creates a voltage, dividing network. As the resistance of the second resistor increases, its voltage drop also increases; therefore the voltage drop across the pull-up resistor decreases.

R

RS232/RC23C – The most standard serial communication interface used in the computer industry.

S

Secondary Air – Air induced into the exhaust system by means of a pump or aspirator valve or other means that is intended to aid in the oxidation of HC and CO contained in the exhaust stream.

Sensor – The generic name for a devise that senses either the absolute value or a change in a physical quantity such as temperature, pressure, or flow rate and converts that change into an electrical quantity signal.

Signal (Electrical/Electronic) – A fluctuating electric quantity, such as voltage or current, whose variations represent information.

Serial Data – Information about a computer system inputs, outputs, and other operating parameters which is transmitted from vehicle to Diagnostic Tester on a single wire in the Data Link Connector (DLC).

Snapshot – A mode of operation where basic diagnostic parameters are stored in the scan tool during a road test and can be examined, printed, or transferred to a computer at the end of the test.

Standard Voltage Values – Normal voltage and resistance values which are established for a given sensor, actuator, or circuit. These standard values can be found in the repair manual.

Stoichiometry – The theoretically ideal air/fuel mixture for combustion in which all oxygen and all fuel will be completely burned.

Square Wave – A digital, electronic signal which is either on or off. There is virtually no time between the on and off states.

T

Trip Cycle – Vehicle operation (following an engine off period) of duration and driving modes, such that all components and systems are monitored at least once by the diagnostic system (except those systems which are steady state monitored).

Two Trip Detection Logic – ECM diagnosis strategy which prevents a diagnostic code or the check engine light from coming on until the problem has duplicated itself twice, with a key off cycle in between.

V

V-BoB – Vehicle Break-out Box.

VIN – Vehicle identification number.

W

Warm-up Cycle – Sufficient vehicle operation such that the coolant temperature has risen at least 40°F from engine starting and/or reaches a minimum temperature of 160°F.

Data Parameters

Current and Past TMC Engines Covered in this Section

Fig. B-1

TL874fB01

OBD Data Parameters

Signal Category	Display Item	Parameter Description	Units of Measurement	Normal Condition (warm idle, accessories off)
Oxygen Feedback	Target A/F (L & R)	Long term fuel trim (learned value) for left ad right cylinder banks	0V to 5V	2.50V ± 1.25V (except 2JZ-GE = 2.50V ± 1.85V)
	A/F FB (L & R)	Loop status for left and right cylinder banks	ON or OFF	ON
	Ox Signal (L & R)	Main O2 sensor signal	Rich or Lean	Switching between rich and lean, no minimum switching frequency
Major Inputs	Engine Coolant Temperature (ECT)	Temperature of engine coolant	Degrees fahrenheit or celsius	80°C to 95°C (176°F to 203°F)
	Engine Speed	Engine rpm	Crankshaft revolutions per minute	Normal warm curb idle as specified in Repair Manual
	Air Flow Meter (VS)	Volume of air entering the engine	Volts	2.50V ± 0.5V (Except following engines: 22R-E = 6 ± 1m3/hr 3VZ-E = 2.8V ± 0.6V) 1FZ-FE = 1.8V ± 0.6V
	Air Flow Meter (KS)	Volume of air entering the engine	milliseconds	35 ± 5ms (except `94 LS 400 = 40 ± 5ms)
	Mass Air Flow Meter	Mass of air entering engine	grams per second	3.8 ± 1.2 gm/sec
	Intake Manifold Pressure (Intake Man.)	Absolute pressure in intake manifold	inches of mercury (in. HG), millimeters of Mercury (mmHG), Kilopascals (Kpa)	4A & 7A-FE = 9.8 ± 1.2 in. HG (250 ± 30 mmHG)) 5S-FE = 9 ± 2 in. HG (230 ± 50 mmHG)
	Throttle	Throttle opening angle in degrees, 90° theoretical maximum	angle in degrees	0° (< 5° KOEO)
	IDL Signal	Throttle closed signal (closed IDL contact)	ON or OFF	ON
	STA Signal	Engine cranking signal	ON or OFF	OFF (except when ignition is switched to start position)

Normal Condition (warm, 2500 rpm, no load)	Cranking Values	Addition Information
2.50V ± 1.25V	N/A	AFR feedback correction value, displayed as correction factor, 2.50V = no correction. 2.50V = lean correction for rich condition. > 2.50V = rich correction for lean condition. Part of basic injection calculation.
ON	N/A	AFR feedback loop status. Open indicates that ECM ignores feedback from the exhaust O2 sensor. Open loop is forced during accel, decel, and cold engine operation. Closed indicates final injection duration is corrected for O2 sensor feedback.
Switching between rich and lean, minimum 8 switches in ten seconds (use O2S/RPM test)	N/A	Signal voltage for main O2 sensor. High concentration of exhaust oxygen (lean condition) = LEAN (< 400 my 02S voltage). Low concentration of exhaust oxygen (rich condition) = RICH (> 600mv 02S voltage)
80°C to 95°C (176°F to 203°F)	Actual temperature	Displayed value determined by comparing THW analog voltage signal to look-up table stored in Read Only Memory. 'Default =176°F if circuit open or shorted
Should agree with tachometer	> 100 rpm	Engine revolutions calculated by comparing Ne signal with microprocessor clock pulses.
N/A	N/A	Displayed value is same as analog voltage signal at VS terminal of ECM.
N/A	N/A	Displayed value represents time that Ks signal is low. As signal frequency increases, time decreases. (time displayed is reciprocal of signal frequency)
N/A	N/A	Displayed value calculated by comparing VG analog voltage signal to a look-up table stored in Read Only Memory.
N/A	N/A	Determined by comparing analog signal voltage at PIM terminal of ECM to look-up table stored in Read Only Memory.
N/A	N/A	Displayed value determined by comparing VTA analog signal voltage to look-up table stored in Read Only Memory. Note: some applications display this value in steps, skipping approximately 8' per step. Value should indicate >70°at WOT.
OFF	N/A	Display determined by status of voltage at IDL terminal of ECM. Low voltage will cause display to read ON, high voltage will read OFF.
OFF	ON	Display determined by status of voltage signal at STA terminal of ECM. High voltage will cause display to read ON. May not indicate ON unless engine is cranked >2 seconds.

OBD Data Parameters (continued)

Signal Category	Display Item	Parameter Description	Units of Measurement	Normal Condition (warm idle, accessories off)
Other Inputs	Vehicle Speed	Road speed of vehicle	miles or kilometers per hour	0 mph/kph vehicle stopped
	A/C Signal	Air conditioning switch status	ON or OFF	On when A/C compressor is running
	PNP Signal	Park/Neutral safety switch status	N-P or Gear	N-P when in neutral or park, GEAR when in any forward or reverse gear
	Knock Retard	Status of ignition spark knock retard	ON or OFF	OFF
Outputs	Injector	Injection duration of #10 injector or injection group	Milliseconds injection time	1.8 o 50ms (see parameter definition)
	Ignition	Timing advance of cylinder #1	Degrees before top dead center crankshaft angle (CA)	5° to 20°
	IAC Step #	Commanded position of step type idle speed control valve	Steps	35 ± 15 steps (see additional information)
	ISC Duty	Commanded duty ratio to Rotary Solenoid Idle Air Control Valve	Percentage of time that voltage is high on RSO (open) coil	5% to 60% (see parameter definitions)

Normal Condition (warm, 2500 rpm, no load)	Cranking Values	Addition Information
0 mph/kph vehicle stopped	N/A	Displayed value calculated by comparing the pulsed vehicle speed sensor signal to the ECM internal clock pulse.
Cycles ON/OFF with A/C compressor (with A/C on)	N/A	Display determined by status of voltage at A/C terminal of the ECM.
N-P when in neutral or park, GEAR when in any forward or reverse gear	N/A	
OFF	N/A	May indicate ON during stall test or rapid acceleration.
Refer to engine control specifications in appendix	N/A	Normal values will vary with engine model, refer to engine control specifications in appendix. Duration decreases cold to warm and increases with load.
N/A	N/A	Computed timing advance (in addition to initial timing set with distributor), timing of IGT signal with respect to NE and G signals. Commanded, not actual position. 125 steps = fully open (maximum by-pass air). 0 steps = fully closed (valve seated position). If valve is mechanically stuck, commanded position will continue to change until 0 or 125 steps are achieved. 2JZ-GE = 20 -25 steps, 1UZ-FE = 30 - 40 steps, 1FZ-FE = 30 - 50 steps
N/A	N/A	
N/A	N/A	Duty ratio increases when A/C is ON or A/T is in GEAR.

OBD II Data Parameters

Signal Category	Display Item	Parameter Description	Units of Measurement/ Range	Normal Condition (warm idle, accessories off)
Oxygen Feedback	Fuel Sys (#1 & #2)	Loop status, cylinder bank 1 & 2	CLOSED or OPEN	CLOSED
	Short FT (#1 & #2)	Short term fuel trim, cylinder bank 1 & 2	% correction to injection duration. Range 0% ± 35%	0% ± 35%
	Long FT (#1 & #2)	Long term fuel trim, cylinder bank 1 & 2	% correction to basic injection duration. Range 0% ± 35%	0% ± 35%
	O2S (B1, S1 & B2, S1)	Main O2 sensor signal voltage, cylinder bank 1 & 2	0 to 1000 millivolts	Varying between 0 to 1000 millivolts, no minimum switching frequency
	O2S (B1, B2)	Sub-O2 sensor signal voltage, cylinder bank 1	0 to 1000 millivolts	Typically fixed voltage (does not vary significantly)
	O2 FT (B1, S1 & B2, S1)	Main O2 sensor fuel trim, cylinder bank 1 & 2 (same as Short FT)	% correction to basic injection duration	0% ± 35%
	Total FT (B1 & B2)	Average total fuel trim, cylinder bank 1 & 2	Decimal value with normal range of 0.8 to 1.2. Normal value is 1.0	0.8 to 1.2 (80% to 120%)
	O2 LR (B1, S1 & B2, S1)	Main O2 sensor lean to rich switch time, cylinder bank 1 & 2	Time in milliseconds	0 to 1000 millivolts
	O2 RL (B1, S1 & B2, S1)	Main O2 sensor rich to lean switch time, cylinder bank 1 & 2	Time in milliseconds	0 to 1000 millivolts
	AFS (B1, S1 & B2, S1)	Voltage output of A/F sensor, cylinder bank 1 & 2	volts	Idling 2.8V - 3.8V
Major Inputs	Coolant Temperature (ECT)	Temperature of engine coolant	Degrees fahrenheit or celsius	80°C to 95°C (176°F to 203°F)
	Engine Speed (rpm)	Engine rpm	Crankshaft revolutions per minute	700 rpm ± 50 rpm
	Mass Air Flow (MAF)	Mass of air entering the engine	grams per second	2.4 to 4.8 gm/sec

Normal Condition (warm, 2500 rpm, no load)	Ignition Switch On, Engine Not Running	Engine Cranking	Addition Information
CLOSED during cruise condition	N/A	N/A	AFR feedback loop status. Open indicates that ECM ignores feedback from the exhaust oxygen and AF sensor. Open loop is forced during accel, decel, and cold engine operation. Closed indicates final injection duration is corrected for O2 sensor feedback.
0% ± 35%	N/A	N/A	AFR feedback correction value, applied to injection duration (after basic injection calculation). Positive value = rich correction for lean condition. Negative value = lean correction for rich condition. Value should be varying during closed loop.
0% ± 35%	N/A	N/A	AFR feedback correction value, part of basic injection calculation. Positive value = rich correction for lean condition. Negative value = lean correction for rich condition. Value should remain stable during closed loop.
Varying between 0 to 1000 millivolts, minimum 8 switches in ten seconds	N/A	N/A	Signal voltage (in millivolts) for main O2 sensor. High concentration of exhaust oxygen (lean condition) = low signal voltage (< 400 mv). Low concentration of exhaust oxygen (rich condition) = high signal voltage (> 600mv)
Typically fixed low voltage (except when driving under normal road load)	N/A	N/A	Signal voltage (in millivolts) for sub O2 sensor. High concentration of post catalyst oxygen = low signal voltage (< 400 mv). Low concentration of post catalyst oxygen = high signal voltage (> 600mv)
0% ± 35%	N/A	N/A	AFR feedback correction value (same as Short, FT), displayed as the percentage of rich or lean correction applied to injection duration. Positive value = rich correction. Negative value = lean correction. Should closely follow Short FT. Percentage will vary with different engines.
0.8 to 1.2 (80% to 120%)	N/A	N/A	Total correction including basic and correct injection duration values. Normal value is 1.00. < 1.00 = reduced duration (lean correction for rich condition). > 1.00 = increased duration (rich correction for lean condition).
N/A	N/A	N/A	Time in milliseconds for signal voltage to go from > 600 mv to < 400 mv. Switching time is effected by the age and condition of the O2 sensor. Faster switching times are desirable.
N/A	N/A	N/A	Time in milliseconds for signal voltage to go from < 400 mv to > 600 mv. Switching time is effected by the age and condition of the O2 sensor. Faster switching times are desirable.
3.3V (Range 2.8V - 3.8V)	N/A	N/A	Signal voltage for A/F sensor. A rich condition is below 3.3V, a lean condition above 3.3V. In closed lope, the ECM maintains a 3.3V output signal.
80°C to 95°C (176°F to 203°F)	Actual temperature	Actual temperature	Displayed value determined by comparing THW analog voltage signal to look-up table stored in Read Only Memory.
Should agree with tachometer	N/A	> 100	Engine revolutions calculated by comparing Ne signal with microporcessor clock pulses.
7.9 to 16.2 gm/sec	ON	N/A	Displayed value calculated by comparing VG analog voltage signal to a look-up table stored in Read Only Memory.

OBD II Data Parameters (continued)

Signal Category	Display Item	Parameter Description	Units of Measurement/ Range	Normal Condition (warm idle, accessories off)
Major Inputs (cont.)	Throttle Pos (TP)	% of theoretical maximum throttle opening	Percentage	7% to 11% (Higher KOEO)
	CTP SW	Closed throttle position signal (closed IDL contact)	ON or OFF	ON
	Starter Sig	Engine cranking signal	ON or OFF	Off (except when ignition is switched to start position)
	Calc Load	Percent of maximum possible enigne load	Percentage	12.9% to 25.2%
Other Inputs	EGRT Gas	Temperature of exhaust gas recirculation intake port	Degrees fahrenheit or celsius	> Intake air temperature, < Engine Coolant temperature
	Vehicle Spd (VSS)	Road speed of vehicle	Miles or kilometers per hour	0 mph/kph vehicle stopped
	Intake Air	Temperature of air entering the intake manifold	Degrees fahrenheit or celsius	Approximately same as understood ambient air temperature
	A/C Sig	Air conditioning switch status	ON or OFF	On when compressor is on
	PNP SW	Park/Neutral switch signal status	ON or OFF	On with transmission inP or N, otherwise Off
	Electrical Load Sig	Status of electrical load from rear window defogger and/or taillight circuit	ON or OFF	On when taillight and/or rear window defogger relay is on
	Stop Light SW	Status of stop lamps	ON or OFF	On when brake pedal is depressed (stop light switch contacts closed)

Normal Condition (warm, 2500 rpm, no load)	Ignition Switch On, Engine Not Running	Engine Cranking	Addition Information
N/A	throttle opner > idle value	7% to 11%	Displayed valve determined by comparing VTA analog Signal voltage to look-up table stored in Read Only Memory. Each 5V signal amplitude equals 10% throttle opening (65% to 75% wide open throttle)
OFF	On (unless throttle opener holds throttle valve open)	On (unless throttle opener holds throttle valve open)	Displayed value determined by monitoring signal voltage at IDL terminal of ECM. With CTP (IDL) switch contact closed, voltage is low, ON will be displayed on data stream.
OFF	OFF	ON	Displayed value determined by monitoring signal voltage at STA terminal opf ECM. When ignition is switched to START position, voltage goes high, ON will be displayed on data stream.
11.7% to 23.9%	N/A	N/A	Displayed value is calculated mathematically using the formula: actual air volume ÷ maximum possible air volume x 100%.
Increase in temperature EGR valve opens	N/A	N/A	Value is determined by comparing THG analog voltage signal to look-up table in Read Only Memory. Use active test to confirm operation.
0 mph/kph vehicle stopped	N/A	0 mph	Displayed value calculated by comparing the pulsed vehicle speed sensor signal to the ECM internal clock pulse.
Approximately same as underhood air temperature	Same as ambient air temperature, with cold engine	Same as ambient air temperature, with cold engine	Value is determined by comparing THA analog voltage signal to look-up table in Read Only Memory. Same as ambient and coolant temperature after 8 hour cold soak.
On when compressor is on	N/A	N/A	ON when compressor clutch is energized (voltage low at ECM). OFF when compressor cycles off due to low evaporator temperature.
ON with transmission in P or N, otherwise OFF	ON with transmission in P or N, otherwise OFF	N/A	ON when PNP switch is closed, voltage low at NSW terminal of ECM.
ON when taillight and/or rear window defogger relay is on	N/A	N/A	ON whenever taillight or rear window defogger relay(s) are energized, voltage high at ECM.
ON when brake pedal is depressed (stop light switch contacts closed)	N/A	N/A	ON when stop light switch closed, voltage high at STP terminal of ECM.

OBD II Data Parameters (continued)

Signal Category	Display Item	Parameter Description	Units of Measurement	Normal Condition (warm idle, accessories off)
Major Outputs	Ign Advance	Timing advance of cylinder #1	Degrees before top dead center	12° ± 5° BTDC
	Injector	Injection duration of cylinder #1	Milliseconds injection on time	2.2 to 5.7ms
	IAC Duty Ratio	Rotary solenoid intake air control valve duty ratio	% of time that voltage is high on the RSO (open) coil.	30% to 38%
Misfire Data	Misfire RPM	Engine Rpm when misfire code sets	Crankshaft revolutions per minute	With 0 misfires detected: 0 rpm
	Misfire Load	Engine load when misfire code sets	grams per engine revolution	With 0 misfires detected: 0 g/r
	Misfire Cyl #1 - 8	Misfire rate detected in each individual cylinder	Percentage per 1000 crankshaft revolutions	No misfires detected = 0%
	Ignition	Ignition events expected every 1000 crankshaft revolutions	Ignition events (6 cly = 0 to 3000, 4 cyl = 0 to 2000, 8 cyl = 0 to 4000)	0 to 3000 (6 cyl)
Other Outputs	FC IDL	Fuel cut with CTP (IDL) switch contacts closed, engine rpm above specified threshold	ON or OFF	OFF
	FC TAU	Fuel cut which takes place as result of light load deceleration (CTP switch contact open)	ON or OFF	OFF
	Intake Ctrl VSV	Status of ACIS VSV	ON or OFF	OFF
	EGR System	Status of EGR system	ON or OFF	OFF
	Fuel Pres Up VSV	Status of FPU VSV	ON or OFF	OFF (will be ON during and for short time after high temperature restart)
	A/C Idle Up VSV	Status of A/C Idle Up VSV	ON or OFF	OFF with A/C off, ON if A/C is on with compressor running
	A/C Cut Sig	Status of A/C cut signal from ECM to A/C control assembly	ON or OFF	ON with A/C switch off, OFF with A/C switched on

Normal Condition (warm, 2500 rpm, no load)	Ignition Switch On, Engine Not Running	Engine Cranking	Additional Information
N/A	N/A	N/A	Calculated by comparing relationship between crankshaft position sensor (Ne) and camshaft position sensor (G) signals. Gap on Ne timing rotor (36-2 tooth configuration) identifies #1 cylinder TDC. G signal identifies 90° BTDC, #1 cylinder compression.
N/A	N/A	Milliseconds injection on time	Determined by monitoring and displaying commanded injector driver duration for #1 cylinder. NOTE: injector may read normal pulse during failsafe fuel cut.
N/A	N/A	N/A	Duty ratio applied to RSO coil of Rotary Solenoid Idle Air Control Valve. Longer duty ratio (higher percent open time) = greater idle air by-pass volume = higher idle speed.
With 0 misfires detected: o mph	N/A	N/A	Freeze frame data stored when misfire is detected by OBD II software. This parameter represents engine rpm at the moment misfire code was set.
With 0 misfires detected: 0 g/r	N/A	N/A	Freeze frame data stored when misfire is detected by OBD II software. This parameter represents engine load at the moment misfire code was set.
No misfires detected = 0%	N/A	N/A	Percentage of misfire for each individual cylinder. Formula: Cylinder misfires + total ignition events per 1000 crankshaft revolution cycle (i.e 6 cyl engine experiences 300 misfires during 1000 crank revolutions, 300 + 3000 = 10% misfire rate).
0 to 3000 (6 cyl)	N/A	N/A	Ignition event counter used to determine the percentage of ignition misfire occurring. Counter resets every 1000 crankshaft revolutions. Vehicle must be in closed loop and a time requirement satisfied before counting begins.
OFF (will go ON with closed throttle above threshold rpm)	N/A	N/A	Signal will be ON when closed throttle deceleration is detected above specified rpm threshold.
OFF (will go ON during rapid deceleration with CTP [IDL] switch contacts open)	N/A	N/A	Signal will be ON when decel fuel cut is commanded by ECM with CTP switch open.
OFF (ON above specified throttle % and below specified rpm)	N/A	N/A	Display will indicate ON when ECM energizes VSV (Voltage low at ACIS terminal of ECM, ACIS air valve closes, high speed torque mode).
ON (within specified throttle, rpm and load range)	OFF	OFF	Display will indicate ON when ECM de-energizes VSV (voltage high at EGR terminal of ECM, vacuum allowed to pass to the modulator/EGR valve). When VSV is on, EGR system is off. NOTE: some systems may use reverse EGR VSV logic, consult repair manual.
OFF (will be ON during and for short time after high temperature restart)	N/A	ON (during high engine temp. cranking)	Display will indicate ON when ECM energizes VSV (voltage low at FPU terminal of ECM, vacuum bleed to fuel pressure regulator open to atmosphere, hot restart mode)
OFF with A/C off, ON if A/C is on with compressor running	N/A	N/A	Display will indicate ON when ECM energizes VSV (voltage low at ACV terminal of ECM, compressor clutch energized)
ON with A/C switch off, OFF with A/C switched on	N/A	N/A	With A/C switch on, display will indicate On when ECM pulls ACT terminal low (requests A/C compressor cut due to heavy load operation).

Data Definitions

Serial Data Interpretation

OBD II Data Stream (CARB) Parameter Definitions

FUEL SYS (#1 AND #2)

Air/fuel ratio feedback loop status displayed as either open or closed loop. Open indicates that ECM ignores feedback from the exhaust O2 sensor. Closed indicates final injection duration is corrected for O2 sensor feedback.

CALC LOAD

Engine load displayed as a percentage of maximum possible load. Value is calculated mathematically using the formula: actual air volume = maximum possible air volume x 100%.

COOLANT TEMP

Temperature of the engine coolant displayed in degrees Fahrenheit or Celsius. Value determined by comparing the THW voltage signal to corresponding temperatures in a look-up table.

SHORT FT (#1 and #2)

A/F Ratio feedback correction value (for cylinder banks #1 and #2 respectively.) Displayed as the percentage of rich or lean correction being applied to corrected injection duration. Short fuel trim is based on rapidly switching exhaust O2 sensor values.

A positive value indicates fuel delivery is being increased to correct for a lean A/F Ratio. A negative value indicates fuel delivery is being decreased to correct for a rich A/F Ratio. Maximum possible short correction is ± 20% of basic injection duration.

LONG FT (#1 AND #2)

Learned value (adaptive memory) correction to A/F Ratio feedback control system. Displayed as a percentage of rich or lean correction applied to basic injection duration calculation. For example:

Case #1 LONG FT = 0%

MAF = 5.0 grams/sec

ENGINE SPD = 1500 rpm

INJECTOR = 4.0 ms

Case #2 LONG FT = 10%

MAF = 5.0 grams/sec

ENGINE SPD = 1500 rpm

INJECTOR = 4.4 ms

A positive value indicates a rich correction due to an extended period of lean exhaust indication. A negative value indicates a lean correction due to an extended period of rich exhaust indication.

Long fuel trim compensates for changes in engine operating conditions like fuel pressure, air leaks, injection spray pattern, changes in fuel properties, and etc. Maximum long fuel correction is 20% to 30% plus or minus basic injection duration. Changes in long fuel trim occur very slowly only after short fuel trim corrections fail to bring air/fuel ratio back to neutral value.

ENGINE SPD

Engine revolutions per minute calculated by comparing the NE signal with the ECM internal clock.

VEHICLE SPD

Vehicle road speed displayed in miles or kilometers per hour. Calculated by comparing the pulsed vehicle speed sensor signal with the ECM internal clock.

IGN ADVANCE

Ignition spark advance angle referenced to #1 cylinder Top Dead Center. Calculated by comparing the relationship between the crankshaft position sensor (NE) and camshaft position sensor (G) signals. The two missing teeth on the (NE) timing rotor (36 minus 2 tooth configuration) identify #1 cylinder TDC. The (G) signal identifies the approach of #1 cylinder compression stroke, occurring at 90° BTDC.

INTAKE AIR

Temperature of air entering the intake manifold, displayed in degrees Fahrenheit or Celsius. Value determined by comparing the THA voltage signal to corresponding temperatures in a look-up table.

MAF

Total mass of air entering the intake manifold, represented in grams per second. This signal is determined by comparing the analog voltage signal from the VG terminal of the MAF sensor to a corresponding value in a lookup table.

THROTTLE POS

Position of the throttle valve displayed as a percentage of fully open. Value is determined by comparing VTA voltage to corresponding value in a look-up table. Normal throttle opening ranges from about 8% at normal curb idle to 80% at wide open throttle. Each .5V = 10% throttle opening.

02S (B1, S1 and B1, S2)

Signal voltage (in millivolts) for the main and sub O2 sensors respectively, located in Bank 1. High concentration of oxygen in exhaust (lean condition) causes signal voltage to go low (less than 400 mv), low concentration of oxygen in exhaust causes signal voltage to go high (greater than 600 mv).

O2FT (B1, S1 and B2, Sl)

The short term fuel trim correction taking place based upon the value of the main O2 sensor located in cylinder banks 1 and 2 respectively. This value is expressed as the percentage of correction to basic injection duration. It should closely follow SHORT FT.

Positive percentage means injection is increased to correct for a lean A/F Ratio. Negative percentage indicates injection is decreased to correct for a rich A/F Ratio.

MISFIRE RPM

Freeze frame data stored when misfire is detected by OBD II software. This parameter represents the engine rpm at the moment that misfire code was set.

OBD II Data Stream (Enhanced) Paramater Definitions

MISFIRE LOAD

Load at which misfire code was set, measured in grams per revolution.

INJECTOR

Calculated time in milliseconds that fuel injector is open, delivering fuel.

IAC DUTY RATIO

Duty ratio signal applied to the Rotary Solenoid Idle Air Control Valve displayed as the percentage of time that voltage is high on the RSO (open) coil. The longer the duty ratio (higher percent open time), the greater the air by-pass volume, the higher the idle speed.

STARTER SIG

ON/OFF status of the STA signal at the ECM. Signal will be ON whenever the ignition switch is in the START position (voltage high at ECM).

CTP SW

ON/OFF status of IDL contact. Signal will be ON whenever the throttle is fully closed and the IDL switch contact is closed (voltage low at ECM).

A/C SIG

ON/OFF status of the A/C magnetic clutch input to the ECM. Signal will be ON anytime the air conditioning compressor clutch is energized (voltage low at ECM). Signal will cycle OFF whenever compressor cycles off due to low evaporator temperature.

PNP SW

(A/T only) ON/OFF status of the neutral safety switch input to the ECM. Signal will be ON whenever the automatic transmission is in the neutral or park gear positions (voltage low at ECM).

ELECTRICAL LOAD SIG

ON/OFF status of the ELS input signal to the ECM. Signal will be ON whenever the tail light or rear window defogger relays are energized (voltage high at ECM).

STOP LIGHT SW

ON/OFF status of the STP signal input to the ECM. Signal will be ON whenever the brake pedal is depressed (stop light switch closed, high voltage at ECM).

FC IDL

ON/OFF status of the IDL fuel cut program in the ECM. Signal will be ON whenever deceleration fuel cut is commanded as a result of closed IDL contact with engine rpm above fuel cut speed.

FC TAU

ON/OFF status of the deceleration enleanment program in the ECM. Signal will be ON whenever deceleration enleanment is commanded as a result of rapid deceleration taking place with the IDL switch contact open.

(MISFIRE) CYL #1 - 8

Percentage of time each individual cylinder is detected misfiring during a specified ignition event detection cycle (see IGNITION). For example, cylinder #2 is detected misfiring 1500 times during a 3000 event detection cycle. MISFIRE CYL#2 will read 50%.

Maximum possible misfire per cylinder is 100%.

IGNITION

Ignition event counter, which is used to determine the percentage of ignition, misfire occurring. This counter resets every 3000 ignition cycles on a 6 cylinder engine, every 2000 ignition cycles on a 4 cylinder engine, and every 4000 ignition cycles on an 8 cylinder engine.

EGRT GAS

Temperature of exhaust gas (in degrees Fahrenheit or Celsius) passing into the intake manifold through the EGR valve (measured on the intake side of the valve.) Value is determined by comparing the THG voltage signal to corresponding temperatures in a look-up table.

INTAKE CTRL VSV

ON/OFF status of the ACIS VSV, which controls the vacuum supply to the ACIS, vacuum actuator. Signal will be ON whenever the VSV is energized (voltage low at ECM) and vacuum is being passed to the ACIS actuator.

EGR SYSTEM

ON/OFF status of the EGR system. Signal will indicate ON whenever EGR system is operating and will indicate OFF whenever VSV is energized preventing/bleeding vacuum flow to EGR valve and modulator. When VSV is energized, EGR system is off and when VSV is de-energized, EGR system is on.

FUEL PRES UP VSV

ON/OFF status of the FPU VSV which controls the vacuum bleed in the manifold vacuum line to the fuel pressure regulator. Signal will be ON whenever the VSV is energized, bleeding atmosphere into the fuel pressure regulator vacuum chamber.

A/C CUT SIG

ON/OFF status of A/C cutoff (ACT) signal from ECM to A/C amplifier. Signal is ON (low voltage at ECM) whenever A/C compressor cut is requested as a result of wide open throttle operation.

A/C IDLE UP VSV

ON/OFF status of A/C idle up VSV which controls the A/C idle up air by-pass. Signal is ON whenever (low voltage at ECM) whenever the A/C magnetic clutch is energized.

TOTAL FT (B1 and B2)

Total fuel trim correction to injectors feeding cylinder banks 1 and 2 respectively. Nominal value is 1.00. Values less than 1.00 indicate reduction in fuel injection duration to correct for overall rich condition. Values greater than 1.00 indicate increase in fuel injection duration to correct for overall lean condition. This number remains fairly stable.

02 L→R (B1, S1 and B2, S1)

O2 sensor switch time from lean to rich, displayed in milliseconds. Affected by the age and condition of the O2 sensor.

02 R→L (B1, S1 and B2, S1)

O2 sensor switch time from rich to lean, displayed in milliseconds. Affected by the age and condition of the O2 sensor.

Certain types of 02S contamination or degradation effect the switching time more significantly from rich to lean (or vise versa).

OBD Data Stream Parameter Definitions

INJECTOR

Calculated injection time in milliseconds. Time that fuel injector is open, delivering fuel.

IGNITION

Ignition spark advance angle in addition to base timing (determined by distributor position) referenced to #1 cylinder Top Dead Center. Calculated by comparing the relationship between the NE and G signals.

ISC STEP #

Commanded position of the idle air control pintle valve. Value represents valve position relative to the fully closed position. 125 steps indicate valve is fully retracted (maximum by-pass air). Zero steps indicate fully closed or seated valve position.

ECM will command step position changes until actual engine speed is within 50 rpm of target idle speed. Therefore, if the valve is mechanically incapable of moving, commanded valve position will continue to change until zero or 125 steps is reached.

ENGINE SPD

Engine revolutions per minute calculated by comparing the NE signal with the ECM internal clock.

AIRFLOW (Karman)

Volume of air entering the intake manifold (measured with the Karman vortex air flow meter). The Karman sensor generates a variable frequency signal, which increases as intake air volume increases. Signal value is expressed in milliseconds; the time between these frequency pulses. As signal frequency increases, the time between signals decreases. Signal time is calculated by comparing the pulse train generated by the sensor to the clock in the ECM.

AIRFLOW (VAF[VS])

Volume of air entering the intake manifold (measured with the Volume Air Flow meter). Airflow meter voltage signal is converted from analog to digital for use by the ECM then changed back to an analog voltage for display on the serial data stream. On OBD equipped vehicles, signal voltage decreases as intake air volume increases.

INTAKE MAN

Manifold Absolute Pressure, displayed as pressure in mmHg (millimeters of mercury), in. Hg, or Kilopascals. Signal value is determined by comparing the PIM voltage signal to corresponding pressures in a look-up table. As load is applied to the engine, manifold pressure increases (approaching atmospheric pressure.)

COOLANT

Temperature of the engine coolant displayed in degrees Fahrenheit or Celsius. Value determined by comparing the THW voltage signal to corresponding temperatures in a look-up table.

THROTTLE

Position of the throttle valve displayed in degrees of throttle angle opening. Some OBD applications display this value in steps, skipping several degrees between each position update. Value is determined by comparing VTA voltage to corresponding value in a look-up table. Typical signal range is between 0° at closed throttle, 70° to 80° at wide open throttle.

VEHICLE SPD

Vehicle road speed displayed in miles or kilometers per hour. Calculated by comparing the pulsed vehicle speed sensor signal with the ECM internal clock.

TARGET A/F (L AND R)

Learned value (adaptive memory) correction to A/F Ratio feedback control system (based on left and right main O2 sensors respectively). Displayed as a zero to five volt signal, which changes in 1.25 volt steps. Neutral value (no feedback correction) is displayed as 2.50V. Voltage lower than neutral indicates fuel delivery is being decreased to correct for a rich A/F Ratio. Voltage higher than neutral indicates fuel delivery is being increased to correct for a lean A/F Ratio.

Learned value correction is similar to OBD II LONG FT, maximum possible correction is ± 20% of basic injection duration. For example:

Case #1 TARGET A/F = 2.50V

VAF = 2.7V

ENGINE SPD = 800 rpm

INJECTOR = 4.0 ms

Case #2 TARGET A/F = 5.0V

VAF = 2.7V

ENGINE SPD = 800 rpm

INJECTOR = 4.8 ms

A/F FB (L ,AND R)

The same as OBD II FUEL SYS. A/F Ratio feedback loop status (for left and right cylinder banks respectively), displayed as either OFF (open loop) or ON (closed loop.) Open loop indicates that the ECM ignores feedback from the exhaust O2 sensor and relies on other major sensors to determine final injection pulse width (i.e. intake air volume or mass, engine rpm, and coolant temperature.) When in closed loop, Ox SIGNAL values should be constantly variable.

KNOCK RETARD

ON/OFF status of knock retard system operation. Indicates ON whenever detonation is sensed and knock retard is being commanded.

STA SIGNAL

Same as OBD II STARTER SIG. ON/OFF status of the STA signal at the ECM. Signal will be ON whenever the ignition switch is in the START position (voltage high at ECM).

IDL SIGNAL

Same as OBD II CTP SW. ON/OFF status of IDL contact. Signal will be ON whenever the throttle is fully closed and the IDL switch contact is closed (voltage low at ECM).

A/C SIGNAL

Same as OBD II A/C SIG. ON/OFF status of the A/C magnetic clutch input to the ECM. Signal will be ON anytime the air conditioning compressor clutch is energized (voltage low at ECM). Signal will cycle OFF whenever compressor cycles off due to low evaporator temperature.

NSW SIGNAL

Same as OBD II NEUTRAL SAFETY (PNP) SW. (A/T only) ON/OFF status of the neutral safety switch input to the ECM. Signal will be ON whenever the automatic transmission is in the neutral or park gear positions (voltage low at ECM).

Ox (L AND R) SIGNAL

Similar to OBD II 02S Exhaust O2 sensor signal displayed as either RICH or LEAN. High concentration of oxygen in exhaust (lean condition) causes signal display to go LEAN (less than 400 my sensor signal voltage). Low concentration of oxygen in exhaust causes signal to go RICH (greater than 600 my sensor voltage).

V-BoB Data Stream Preselected Parameter Definitions

NE

Engine revolutions per minute calculated by comparing the NE signal with a fixed clock pulse.

Ks

Volume of air entering the intake manifold (measured with the Karman vortex air flow meter). The Karman sensor generates a variable frequency signal which increases as intake air volume increases. Signal value is expressed in milliseconds; the time between these frequency pulses. As signal frequency increases, the time between signals decreases. Signal time is calculated by comparing the pulse train generated by the sensor to the clock in the ECM.

#10

Calculated injection time in milliseconds. Time that fuel injector is open, delivering fuel.

Vs

Volume of air entering the intake manifold (measured with the Volume Air Flow meter). Air flow meter analog voltage signal is tapped directly from the Vs signal wire at the ECM.

OX(L/R)

Main exhaust O2 sensor signal, displayed as either RICH or LEAN. High concentration of oxygen in exhaust (lean condition) causes signal display to go LEAN (less than 400 mv sensor signal voltage). Low concentration of oxygen in exhaust causes signal to go RICH (greater than 600 mv sensor voltage).

OXS

Sub-O2 sensor signal, displayed as either RICH or LEAN. High concentration of oxygen in exhaust (lean condition) causes signal display to go LEAN (less than 400 mv sensor signal voltage). Low concentration of oxygen in exhaust causes signal to go RICH (greater than 600 mv sensor voltage).

THW

Temperature of the engine coolant displayed in degrees fahrenheit or celsius. Value determined by comparing the THW voltage signal to corresponding temperatures in a **look-up table**.

THA

Temperature of the intake air displayed in degrees fahrenheit or celsius. Value determined by comparing the THA voltage signal to corresponding temperatures in a **look-up table.**

VTA

Position of the throttle valve displayed in degrees of throttle angle opening. Value is determined by comparing VTA voltage to corresponding value in a look-up table. Typical signal range is between 0° at closed throttle, 70° to 80° at wide-open throttle.

IDL

ON/OFF status of IDL contact. Signal will be ON whenever the throttle is fully closed and the IDL switch contact is closed (voltage low at ECM).

IGF

Ignition fail signal displayed in revolutions per minute. Calculated by comparing IGF voltage pulses to fixed clock pulse.

SP1

Vehicle road speed displayed in miles or kilometers per hour. Calculated by comparing the pulsed vehicle speed sensor signal a fixed clock pulse.

NSW

(A/T only) ON/OFF status of the neutral safety switch input to the ECM. Signal will be ON whenever the automatic transmission is in the neutral or park gear positions (voltage low at ECM).

A/C

On applications with ACMG, this is the request signal from the A/C control assembly, which informs the ECM that magnetic clutch, should be energized.

On applications where A/C magnetic clutch is controlled by the A/C amplifier, this signal informs the ECM that the magnetic clutch is energized.

ACMG

ON/OFF status of the A/C magnetic clutch control by the ECM. Signal will be ON anytime the air conditioning compressor clutch is energized (voltage low at ECM). Signal will cycle OFF whenever the ECM cycles the compressor off.

FPU

ON/OFF status of the Fuel Pressure Up VSV. Signal is on when the VSV is energized (voltage low at ECM). When energized the FPU VSV bleeds atmosphere into the fuel pressure regulator vacuum chamber for hot engine restarts.

STA

ON/OFF status of the STA signal at the ECM. Signal will be ON whenever the ignition switch is in the START position (voltage high at ECM).

STJ

ON/OFF status of the STJ cold start injector driver circuit in the ECM. Signal will be ON during cranking whenever engine coolant temperature is below a specified threshold.

B

Battery voltage sensed at +B and +B1 terminals of the ECM. Battery voltage will be present anytime the EFl main relay power contacts are closed (when ignition switch is on).

VC

Voltage constant 5V sensor circuit reference voltage. Will be approximately 5V whenever the ignition is on.

E01

Ground circuit for fuel injectors. Should be less than 100 millivolts with the engine running.

E2

Ground circuit for ECS system sensors. Should be less than 100 millivolts with the engine running.

Technical Reference & Specifications

Diagnostic Tester

Fig. D-1
TL874fD01

DIAGNOSTIC REFERENCE INFORMATION

Vane Air Flow Meter (Vs)

Circuit Description

The vane air flow meter is located in the intake air duct between the air cleaner housing and the engine throttle body. It provides the ECM information on the amount of load placed on the engine by directly measuring intake air volume.

During engine operation, intake air flow reacts against the meter's measuring plate, which causes it to deflect in proportion to the volume of air flow. This movement is transferred through a shaft to a movable arm on the meter's potentiometer (variable resistor). The Vs signal to ECM varies according to the potentiometer's position.

The vane air flow meter also houses the intake air temperature sensor and a fuel pump switch. The fuel pump switch is used to maintain fuel pump operation after start-up (when sufficient air flow exists to open the measuring plate).

Vane Air Flow Meter

The Vs signal represents the amount of load placed on the engine. The potentiometer provides a variable voltage signal back to the VS terminal of the ECM.

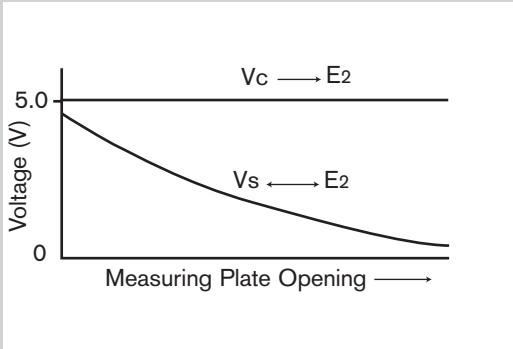

As shown in the graph, Vs signal voltage decreases with higher air flow (larger measuring plate opening). The Vc - E2 line represents the 5V reference source.

NOTE: The 22R-E and 4A-GE engines use an air flow meter with opposite voltage logic.

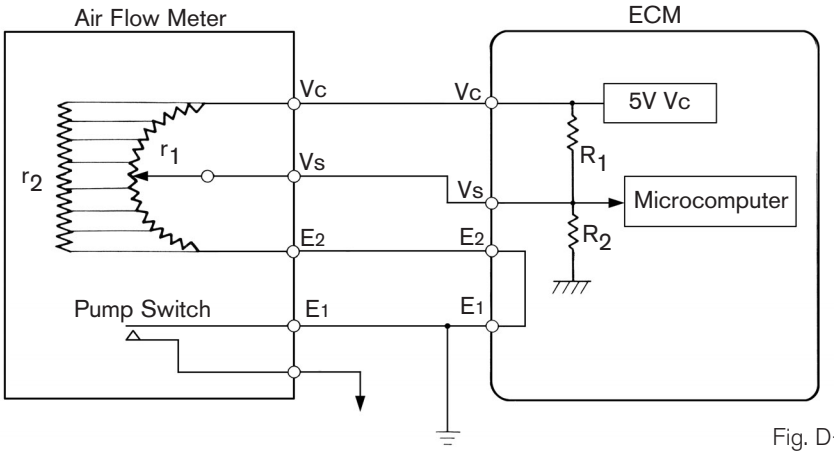

Fig. D-2

TL874fD02

Troubleshooting Hints

- The air flow meter is provided a regulated 5V reference at Vc terminal.
- As indicated in the graph, the voltage reading at Vs terminal with Ignition ON, Engine OFF should be between 3.7V - 4.3V.
- Once the engine is started, Vs signal voltage should decrease to indicate initial measuring plate opening.
- The r_2 resistor (which is connected in parallel to the r_1) allows the meter to continue to provide a Vs signal in the event an open occurs in the main potentiometer (r_1).
- The R_1 and R_2 resistors provide the ECM with self-diagnostic capabilities and also provides a fail-safe voltage in the event of an open circuit.

OBD Diagnostic Trouble Codes

DTC #	Effected Circuit	Diagnostic Trouble Code Detection Condition
31	Vs Circuit	Open or Short (Vc) in Air Flow Meter Circuit for Specified Time
32	Vs Circuit	Open or Short (Vc – Vs) in Air Flow Meter Circuit for Specified Time

OBD II Diagnostic Trouble Codes

DTC #	Effected Circuit	Diagnostic Trouble Code Detection Condition
P0100	Air Flow Meter Circuit	Air Flow Meter Circuit Malfunction
P0101	Air Flow Meter Circuit	Air Flow Meter Circuit Range/Performance Problem

Typical Serial Data

Data Source	Name	Units	Warm Idle
OBD	Vs	volts	2.5V ± 0.5V[1]
OBD II	_____	_____	_____
V-BoB	Vs	volts	2.5V ± 0.5V[1]

1. 3VZ-FE = 2.8V ± 0.6V

DIAGNOSTIC REFERENCE INFORMATION

Karman Vortex Air Flow Meter (Ks)

Circuit Description

Like the vane air flow meter, the Karman Vortex Air Flow Meter is located between the air cleaner housing and the engine's throttle body. It also provides the ECM with the same type of information; an intake air volume signal that is used to determine the amount of load placed on the engine.

The operation of the Karman Vortex Air Flow Meter differs from that of the vane type. During engine operation, a swirling effect is created in the intake air stream when it reacts against the meter's vortex generator. A sample of this pulsating air is then applied to a movable metal foil mirror, which causes it to flutter. The oscillating mirror causes light from the photo coupler's LED to be alternately applied and diverted from a phototransistor.

As a result, the phototransistor rapidly switches the 5V Ks signal to the ECM. As shown in the diagram, the frequency of the Ks signal increases proportionally with intake air flow.

Karman Vortex Air Flow Meter

Inside the Karman Vortex air flow meter, intake airflow oscillates a movable mirror which turns a light sensitive photo transistor on and off.

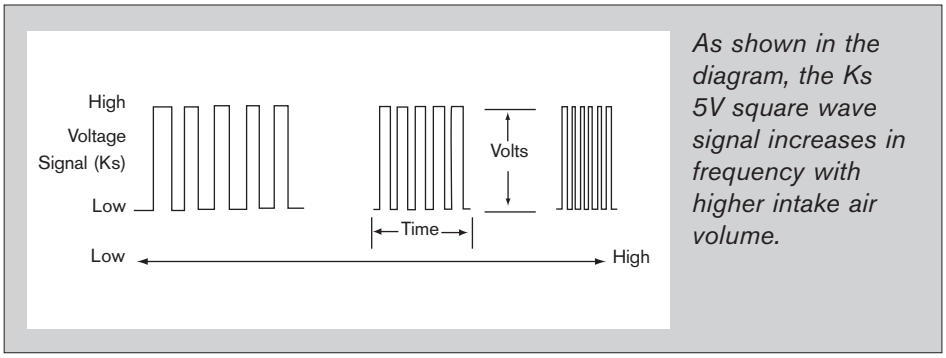

As shown in the diagram, the Ks 5V square wave signal increases in frequency with higher intake air volume.

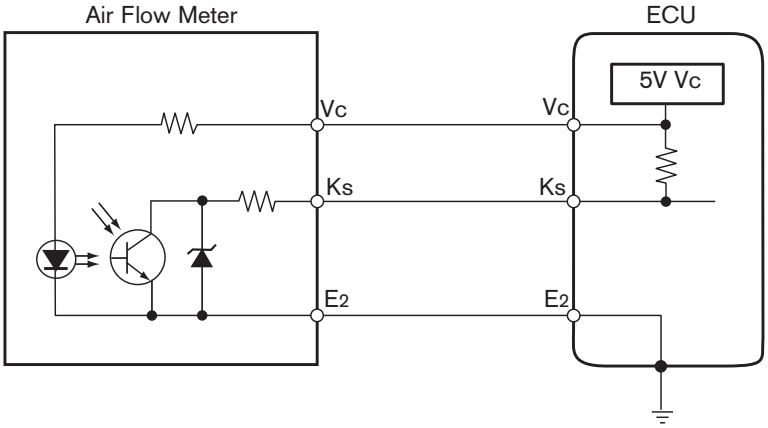

Fig. D-3

TL874fD03

Troubleshooting Hints

- Remember a 5V signal operating at a 50% duty cycle will read approximately 2.5V. Since Ks operates at approximately 50% duty cycle during engine operation, Ks signal voltage will provide little useful information during diagnosis.

- Ks signal frequency changes dramatically with engine load changes. For this reason, observing Ks frequency changes would provide the most useful diagnostic information. Accurate Ks signal inspection requires using an oscilloscope or high quality digital multimeter with frequency capabilities (non-OBD vehicles).

OBD Diagnostic Trouble Codes

DTC #	Effected Circuit	Diagnostic Trouble Code Detection Condition
31	Ks Circuit	Open or Short in Air Flow Meter Circuit for Specified Time

OBD II Diagnostic Trouble Codes

DTC #	Effected Circuit	Diagnostic Trouble Code Detection Condition
P0100	Air Flow Meter Circuit	Air Flow Meter Circuit Malfunction
P0101	Air Flow Meter Circuit	Air Flow Meter Circuit Range/Performance Problem

Typical Serial Data

Data Source	Name	Units	Warm Idle
OBD	Ks	ms	40ms ± 15ms
OBD II	_____	_____	_____
V-BoB	Ks	ms	40ms ± 15ms

DIAGNOSTIC REFERENCE INFORMATION

Mass (Hot-Wire) Air Flow Meter (VG)

Circuit Description

The Mass Air Flow Meter provides some distinct advantages over the "volume" type air flow meters. Since this type of air flow meter directly measures air mass (and not just volume), any factor affecting the density of the intake air will influence the output signal. These factors include air temperature, humidity and altitude.

This type of Mass Air Flow Meter uses a "hot wire" and thermistor placed in a path of sample intake air flow. It operates on the theory that the hot wire is cooled by incoming air mass, in proportion to air flow. The circuit is the hot wire and incoming air flow by regulating bot wire current flow with the power transistor.

The circuit operates as a "feedback" system to equalize the electrical potential between points A and B. If a difference exists, the operational amplifier varies the output of the power transistor to rebalance the circuit. In this way, a variable DC voltage signal is output to the VG terminal of the ECM.

Mass Air Flow Meter

The Mass Air Flow Meter signal takes into account any factor affecting air mass or density, such as: air temperature, humidity and altitude.

Incoming air cools the "hot wire," lowering its resistance value and increasing output voltage at point B (VG signal).

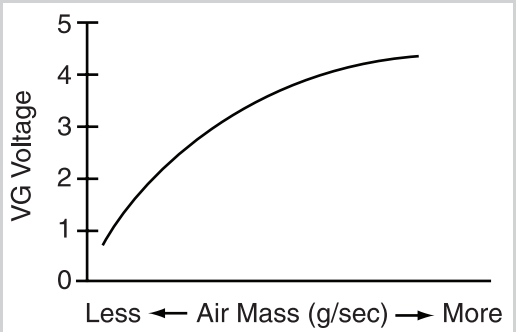

As shown in the graph, VG signal voltage increases with higher intake air mass. The ECM interprets higher VG voltage as increased load placed on the engine, increasing injection quality and retarding spark.

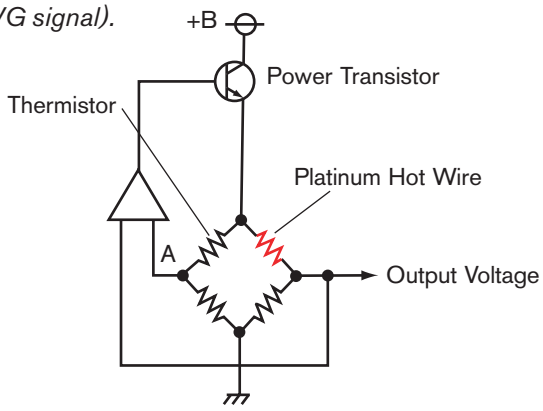

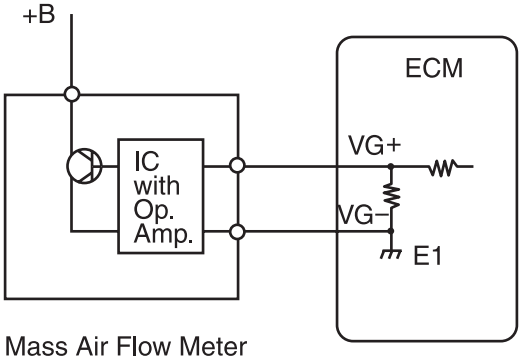

Fig. D-4

TL874fD04

Troubleshooting Hints

- Unlike volume airflow meters, this hot-wire mass air flow meter uses battery voltage (+B) rather than the 5V-reference voltage source VC.
- A VG signal check may be performed with Ignition ON, Engine OFF: While blowing towards the hot wire, observe the VG signal changes.
- **On OBD II vehicles** the following diagnostic rule applies:
  - a MAF reading of **0 gm/sec** would indicate an open in +B circuit or open or short in VG circuit.
  - a MAF reading of **271 gm/sec or more** would indicate an open in VG- (ground) circuit.

OBD Diagnostic Trouble Codes

DTC #	Effected Circuit	Diagnostic Trouble Code Detection Condition
31	VG Circuit	Open or Short in Air Flow Meter Circuit for Specified Time

OBD II Diagnostic Trouble Codes

DTC #	Effected Circuit	Diagnostic Trouble Code Detection Condition
P0100	Air Flow Meter Circuit	Air Flow Meter Circuit Malfunction
P0101	Air Flow Meter Circuit	Air Flow Meter Circuit Range/Performance Problem

Typical Serial Data

Data Source	Name	Units	Warm Idle
OBD	VG	gm/sec	3.8 ± 1.2 gm/sec
OBD II	VG	gm/sec	3.8 ± 1.2 gm/sec
V-BoB	VG	volts	0.7V to 1.7V

DIAGNOSTIC REFERENCE INFORMATION

Engine Coolant Temperature Sensor Circuit (ECT)

Circuit Description

The Engine Coolant Temperature sensor circuit is used to monitor engine temperature, supplying the ECM with important information to determine fuel enrichment, spark angle, idle speed control, and emissions control system status.

The sensor, which is typically located near the thermostat housing, is a negative temperature coefficient (NTC) thermistor. Sensor resistance falls as the temperature rises. The sensor is connected in series with a pull-up resistor in the ECM, which acts as a voltage divider. As resistance of the sensor falls with increasing coolant temperatures, the voltage drop across the sensor also falls. The sensor circuit, therefore, generates an analog voltage signal, which varies inversely with the temperature of the engine coolant.

Pull-up resistor R_1 can have a resistance value of either 2.7KΩ or 5KΩ depending on engine application The chart below shows the normal signal voltage characteristics for both resistance values.

Engine Coolant Temperature Sensor Circuit

The Engine Coolant Temperature sensor monitors engine temperature by use of a voltage divider circuit. The pull-up resistor in the ECM is fixed value while the resistance of the sensor thermistor varies inversely with coolant temperature.

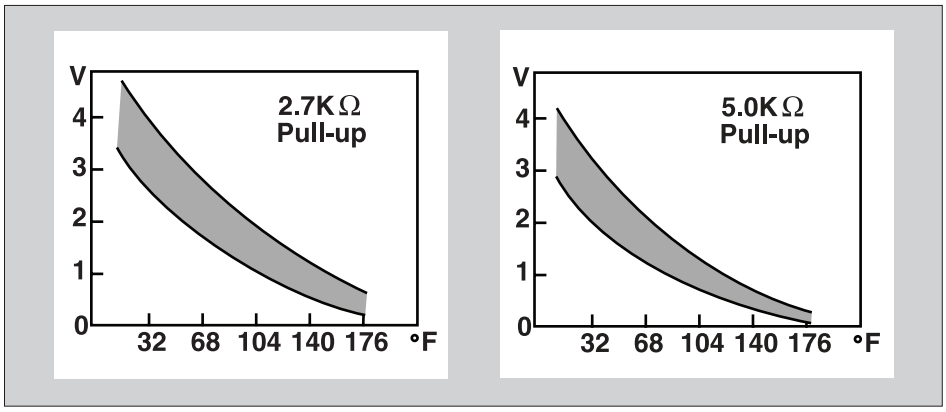

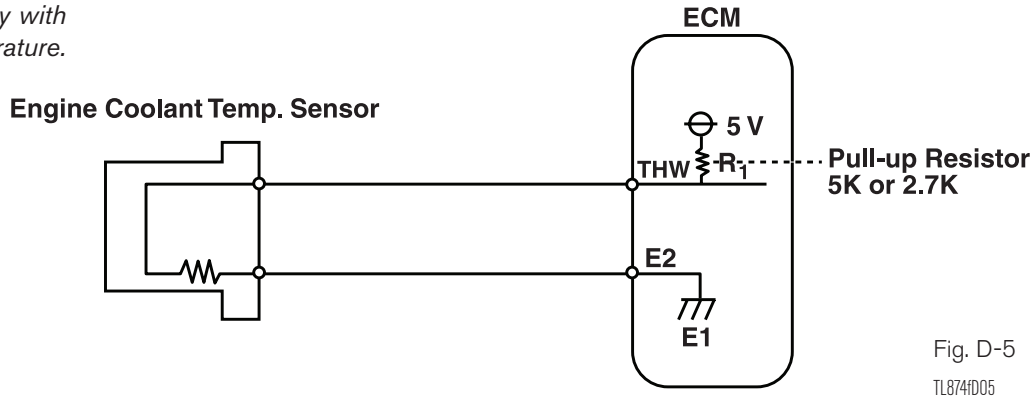

Fig. D-5

TL874fD05

Troubleshooting Hints

- The Engine Coolant Temperature sensor signal is represented on a Diagnostic Tester in °F or °C temperature units. When using the Vehicle Break-out Box (V-BoB), coolant temperature can be displayed either in temperature units or as a voltage (by toggling the F7 key.)

- Engine Coolant Temperature sensor information is replaced by a failsafe value whenever the ECM detects a fault in the circuit. When troubleshooting with a Diagnostic Tester, using the OBD data stream, failsafe value is displayed rather than actual value.

- To quick check circuit integrity using the OBD data stream, install a 1.2KW resistor across the ECT sensor harness terminals. If temperature displayed on Diagnostic Tester reads between approximately 35°C (95°F) to 43°C (110°F), the electrical circuit is good.

- To quick check circuit integrity using OBD II or V-BoB data stream:

  - Disconnect sensor harness: displayed temperature should go to approximately -40°C (-40°F) (5V)

  - Short sensor harness THW to E2: displayed temperature should go to approximately 120°C (248°F) (0V)

OBD Diagnostic Trouble Codes

DTC #	Effected Circuit	Diagnostic Trouble Code Detection Condition
22	Engine Coolant Temperature Sensor Circuit	Detects an open or short circuit in the Engine Coolant Temperature circuit for more than a specified amount of time.

OBD II Diagnostic Trouble Codes

DTC #	Effected Circuit	Diagnostic Trouble Code Detection Condition
P0115	Engine Coolant Temp. Circuit Malfuntion	Detects an open or short circuit in the Engine Coolant Temperature circuit for more than a specified amount of time.
P0116	Engine Coolant Temp. Circuit Range Problem	Detects sensor range or performance problem by monitoring the time it takes for sensor signal to reach and exceed a specified minimum temperature.

Typical Serial Data

Data Source	Name	Units	Warm Idle	THW shorted to E2	Circuit Open
OBD	ECT	°F or °C	85°C to 104°C (185°F) to (220°F)	80°C (176°F)	80°C (176°F)
OBD II	COOLANT TEMP.	°F or °C	85°C to 104°C (185°F) to (220°F)	120°C (248°F)	-40°C (-40°F)
V-BoB	THW	°F or °C or volts	85°C to 104°C (185°F) to (220°F) 0.1V to 0.5V	120°C (248°F) or 0V	-40°C (-40°F) or 5V

DIAGNOSTIC REFERENCE INFORMATION

Throttle Position (TP) and Closed Throttle Position (CTP) Sensor Circuit

Circuit Description

The Throttle Position sensor is attached to the throttle body. It monitors throttle valve opening angle and closed throttle status.

The sensor generates an analog voltage signal, which varies in proportion to throttle opening, from low to high as the throttle is opened. The TP sensor also includes a digital idle contact switch, which is closed at idle and opens as the throttle is tipped open. Signal characteristics are represented by the graph shown below.

Information from the this sensor is used by the ECM to make judgments about power enrichment, deceleration fuel cut, idle air control, spark advance angle corrections, and the status of emissions control sub-systems.

Throttle and Closed Throttle Position Sensor Circuit

Throttle position sensor uses a potentiometer and simple switch contact to monitor throttle angle and closed throttle status.

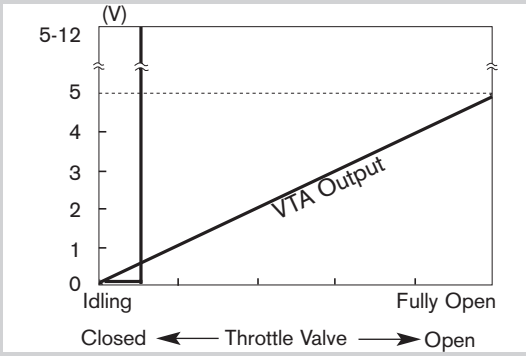

TP signal can be easily measured with a voltmeter or a scan tool. The voltage signal moves from low to high as the throttle opens. The CTP signal is low at idle and goes high when the throttle is opened.

Scan data is displayed in degrees throttle valve angle or in percentage of opening.

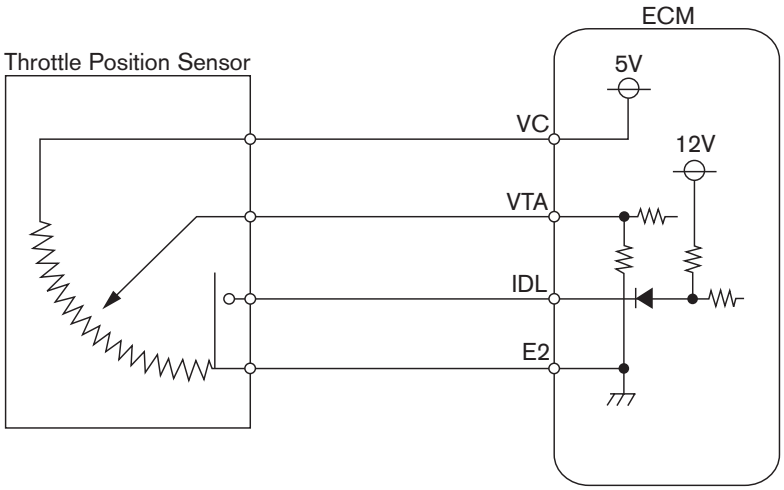

Fig. D-6

TL874fD06

Troubleshooting Hints

- Throttle Position sensor signal is represented differently on OBD and OBD II data streams. OBD displays opening angle in degrees ranging from 0° to 75°. OBD II displays throttle opening as a percentage of wide-open throttle, ranging from about 5% to 80%.
- On V-BoB, TP sensor signal is represented in degrees opening angle or as an analog voltage (by toggling the F7 key).
- Throttle angle scan data defaults to a failsafe value when a fault is detected in the TP sensor circuit. Depending on application, throttle angle will go to either 30° or 0° when a fault is detected, as long as the CTP switch remains open. When the CTP switch closes, the signal defaults to 0° and remains there. If the fault is intermittent, the TP signal will return to normal only after the vehicle speed sensor indicates 0 mph.
- To quick check the circuit using a Diagnostic Tester, observe serial data while depressing the accelerator pedal to wide open. Signal should increase to near maximum. For intermittent problems, use V-BoB data or oscilloscope.
- Code 51 for CTP switch contact will only set when an open circuit fault is detected. Shorted CTP will cause fuel cut to occur above fuel cut rpm threshold.

OBD Diagnostic Trouble Codes

DTC #	Effected Circuit	Diagnostic Trouble Code Detection Condition
41	Throttle Position Sensor Circuit	Open or short detected in the VTA line to ECM for more than a specified amount of time. (NOTE: disconnected sensor will not set code 41)
51	Switch Condition Signal	Open detected in Closed Throttle Position switch circuit (NOTE: Only displays when TE1 is grounded [code display mode]. Will also display if PNP signal indicates trans in gear or if A/C input is ON. Code does not store in memory.

OBD II Diagnostic Trouble Codes

DTC #	Effected Circuit	Diagnostic Trouble Code Detection Condition
P0100	Throttle Position Sensor Circuit	Open detected in circuit (VTA lower than specified with CTP switch open) Short detected in circuit (VTA higher than specified voltage)
P0121	Throttle Position Sensor Signal Range Problem	With CTP switch closed, VTA is greater than specified voltage

Typical Serial Data

Data Source	Name	Units	Key ON/Wide Open Throttle	Warm Idle
OBD	Throttle	° Open	> 70°	0°
OBD II	Throttle POS	% Open	≈65% to 75%	7% to 11%
V-BoB	VTA	° Open or volts	>70° or 3.5V to 4.8V	0° or 0.2V to 0.8V

DIAGNOSTIC REFERENCE INFORMATION

Power Distribution Circuit

Circuit Description

The power distribution circuit consists of a Main Relay, the ignition switch, the ECM, and related wiring. There are basically two different types of power distribution circuits, ECM controlled and ignition switch controlled.

ECM controlled power distribution is used on applications with a Step Motor IAC system. All other applications use the ignition switch controlled system. In both cases, the power distribution electrical wiring carries electrical current from the battery, through the Main Relay, through the ECM, and back to the battery through the E1 ground.

Power Distribution Circuit

With Step Motor IACV
When the ignition switch is in the Start or Run position, current flows to the ECM IGSW terminal, signaling the ECM to turn on the MREL circuit. The ECM sends current through the MREL circuit and Main Relay pull-in winding, to ground. This closes the power contact, causing current to flow to the ECM +B terminals.

Without Step Motor IACV
When the Ignition switch is in the Start or Run position, current flows through the main relay pull-in winding, to ground, causing the power contact to close. This causes current to flow through the power contact to the ECM +B terminals.

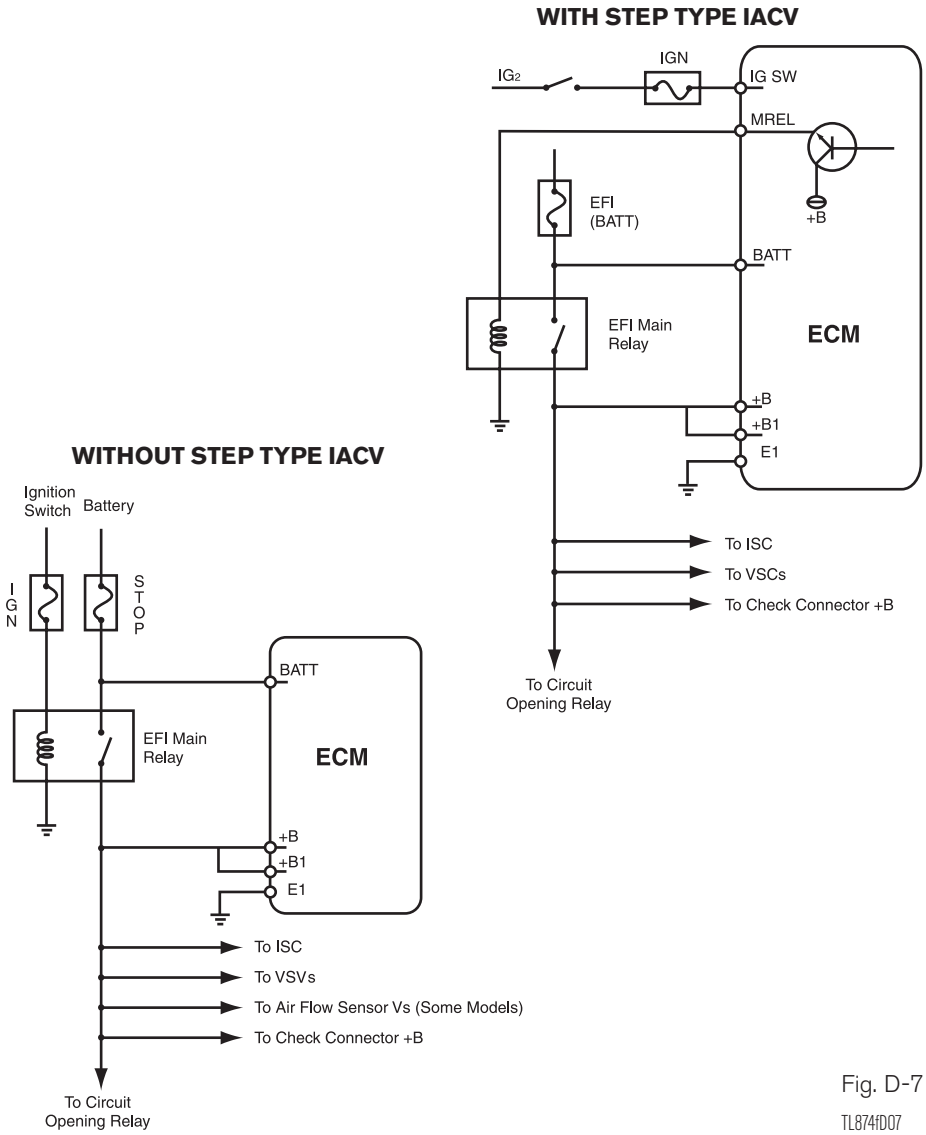

Fig. D-7

TL874fD07

DIAGNOSTIC REFERENCE INFORMATION

Fuel Pump Control Circuit

Circuit Description

Fuel pump control methods differ between models that use a vane air flow meter and those that do not. On models using a vane air flow meter, a fuel pump switch located inside the meter is used to maintain fuel pump operation once the engine has started. During cranking, the STA signal commands the circuit opening relay to provide power to the fuel pump. After start-up, intake air flow opens the air flow meter's measuring plate closing the fuel pump switch. As a result, the circuit opening relay will maintain fuel pump operation after the engine has started.

On other systems, the circuit opening relay still operates the fuel pump from the STA command during cranking; however after the engine has started, the ECM must switch on the Fc circuit to continue pump operation. On this type of system, the ECM must continue to see an engine speed signal (NE) in order to continue operating the fuel pump after the engine has started.

Fuel Pump Control Circuit

During cranking, the circuit opening relay powers the fuel pump based on the STA signal command.

After start-up fuel control differs in that systems using a vane air flow meter use a fuel pump switch to maintain pump operation. All others use ECM control of the Fc signal to maintain fuel pump operation.

Condition \ Terminal	+B	Fc	Fp
Cranking	12V	–	12V
Engine Running	12V	< 1V	12V

As shown in the chart, Fc control voltage is pulled low (grounded) by either the fuel pump switch (when intake air flow is sufficient) or the ECM (when Ne signal is above a specified rpm) to keep the fuel pump operating after start-up.

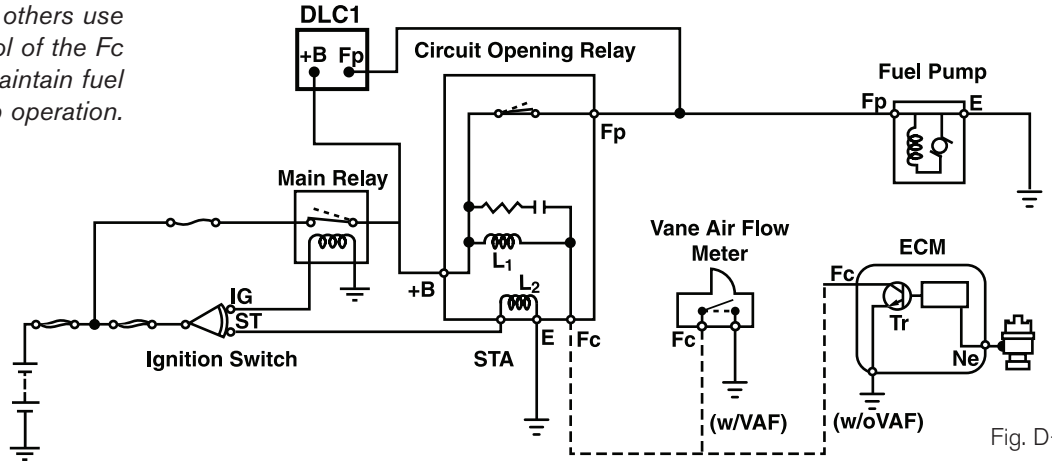

Fig. D-8

TL874fD08

DIAGNOSTIC REFERENCE INFORMATION

Injector Drive Circuit

Circuit Description

The design of the injector drive circuit determines when each injector delivers fuel in relation to the operating cycle of the engine. Depending on the engine application, the drive circuit design may be either a Simultaneous, Grouped, or Sequential type. In all designs, voltage is supplied to the injectors from the ignition switch or EFI main relay and the ECM controls injector operation by turning on the driver transistor grounding the injector circuit.

On Simultaneous type drive circuits, all injectors are pulsed at the same time by a common driver circuit. Injection occurs once per engine revolution, just prior to TDC No. 1 cylinder. Twice per engine cycle, one-half of the calculated fuel is delivered by the injectors. With Grouped drive circuits, injectors are grouped in pairs and a separate driver controls each group of injectors. Injection is timed to pulse just prior to TDC for the leading cylinder in the pair. On Sequential drive circuits, each injector is controlled separately and is timed to pulse just prior to each intake valve opening.

Injector Drive Signal

Depending on engine application, the injector drive circuit may be either a Simultaneous, Grouped or Sequential type.

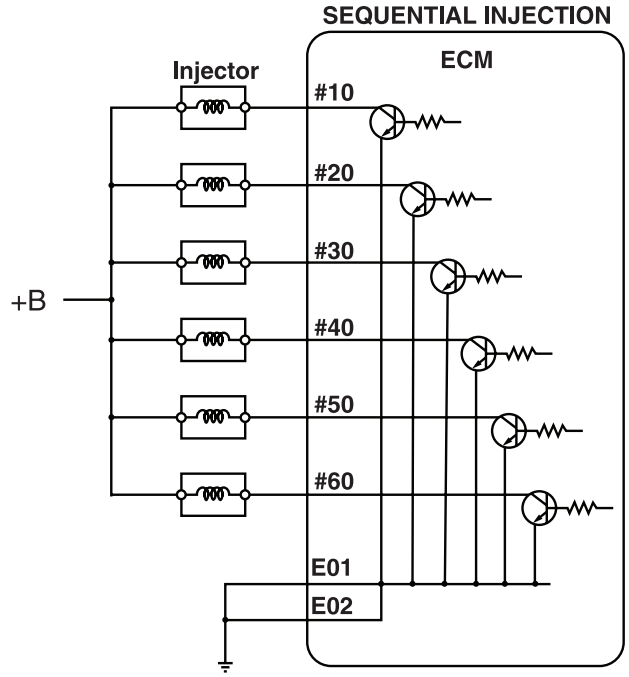

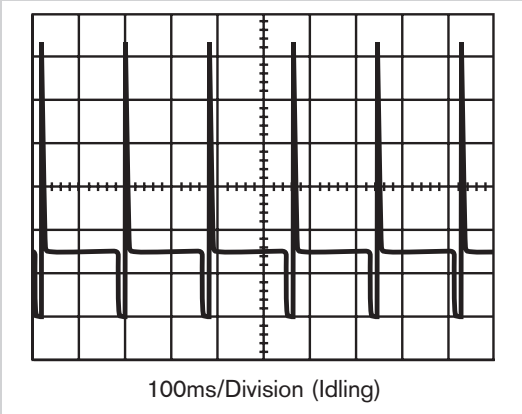

The horizontal line in the scope pattern above represents battery voltage applied to the injector circuit. As the injector driver turns on (to open the injector) the signal drops to near 0V. Once the driver opens (to close the injector) a voltage spike occurs as a result of the collapsing magnetic field.

Fig. D-9

TL874fD09

Troubleshooting Hints

- Diagnostic Trouble Code for injector circuit can set for any misfire, regardless of cause.
- No Diagnostic Trouble Codes for injector circuit on OBD equipped engines.

OBD II Diagnostic Trouble Codes

DTC #	Effected Circuit	Diagnostic Trouble Code Detection Condition
P0201	Injector Circuit #1	Specified cylinder misfire continuously (two trip detection logic)
P0202	Injector Circuit #2	
P0203	Injector Circuit #3	
P0204	Injector Circuit #4	
P0205	Injector Circuit #5	
P0206	Injector Circuit #6	

DIAGNOSTIC REFERENCE INFORMATION

Ignition Circuit (IGT & IGF Signals)

Circuit Description

The ignition timing (IGT) and ignition fail (IGF) signals provide crucial information in the control of ignition system timing, injection timing, and Fail-Safe activation. Based on an initial timing angle calculated from the NE and G signals, the ECM outputs an IGT signal to the igniter as a reference point from which it determines ignition dwell period. A special circuit inside the igniter controls the ignition dwell period by controlling when the power transistor is switched on. When the ECM determines the proper time to provide spark, it turns the IGT signal off, which turns the igniter power transistor off, producing a spark.

The IGF signal is used by the ECM to determine if the ignition system is working and to protect the catalytic converter. When the ECM does not detect the IGF signal, the ECM goes into fail-safe mode. With no IGF signal, the ECM will store a DTC(s), depending on model year and number of cylinders affected. There are different fail-safe modes depending on the ignition system, cylinder displacement and model year. The following is general summary.

IGT & IGF Signal Relationship

The IGT signal triggers the igniter power transistor. Without IGT, spark will not occur.

The IGF signal confirms that an ignition event has occurred. Without IGF, the ECM shuts down injection pules.

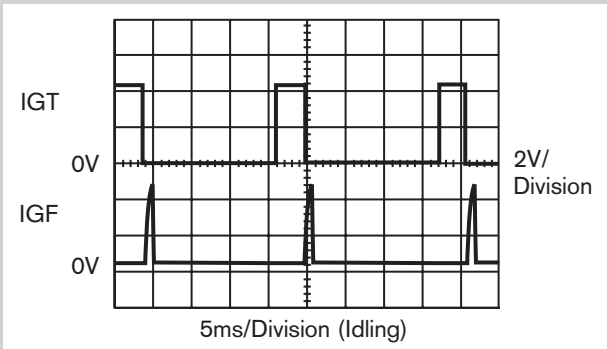

The IGT signal trailing edge indicates the point where the power transistor is turned off, firing the coil.

The IGF signal is generated by the igniter each time spark occurs.

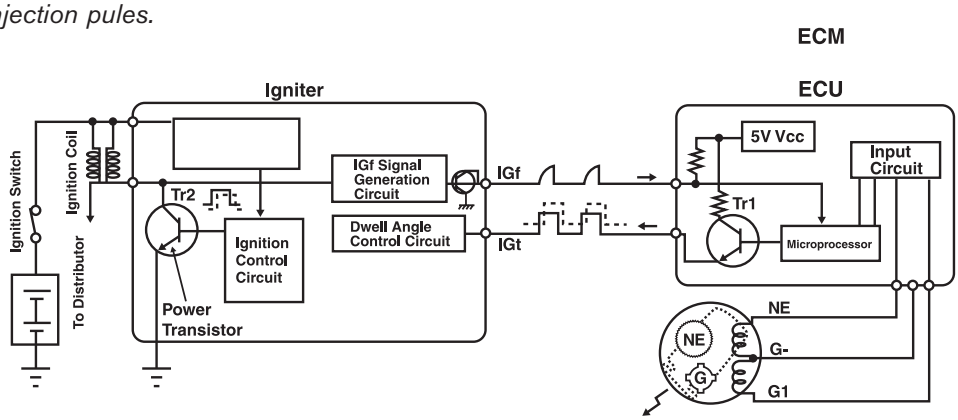

Fig. D-10

TL874fD10

If there is no IGF signal on engines before 1998 model year, the ECM will enter fail-safe and turn off all the fuel injectors.

Beginning with the 1998 model year, V-6 and V-8 engines equipped with direct ignition system with integrated ignition coil/igniter (1 ignition coil/lighter per cylinder), the engine will still run without the IGF signal, but the MIL will be on.

Beginning with the 2001 model year on 1 ignition coil/igniter per cylinder engines, the ECM fail-safe will turn off the fuel injector if there is no IGF signal for that cylinder and if engine conditions (such as load and temperature) are sufficient to damage the catalytic converter. If the IGF signal returns to normal while the engine is running, the injector may remain off until the next engine start.

Due to the rapid, high frequency nature of these signals, inspection should be performed using an oscilloscope or high quality digital multimeter with frequency capabilities.

Troubleshooting Hints

- On older systems, if engine will not start due to missing IGF, injectors will pulse once or twice during cranking. Use injector test light to confirm this condition.
- Scan data indicates an injection duration even when injectors are disabled due to IGF fuel cut fail-safe.
- Regardless of the type of IGF fail-safe mode, the IGF DTCs must be diagnosed **before** attempting to diagnose a fuel system/injection problem. The IGF DTCs are one trip DTCs.
- Use oscilloscope to diagnose IGT and IGF circuits.

OBD Diagnostic Trouble Codes

DTC #	Effected Circuit	Diagnostic Trouble Code Detection Condition
14	IGF Circuit	ECM does not detect IGF signal for 6 consecutive IGT signals.

OBD II Diagnostic Trouble Codes

DTC #	Effected Circuit	Diagnostic Trouble Code Detection Condition
P1300 Series	IGF/Igniter Circuit Malfunction	ECM does not detect IGF signal for 6 or 8 consecutive IGT signals with engine running.

Fail-Safe Conditions

Fail-Safe Conditions, OBD

DTC	Circuit Effected	Fail-Safe Trigger	Fail-Safe Operation
12	Cranshaft Position	ECU does not receive either G1 or G2 signal	ECU defaults to remaining sensor; if both sensors lost, engine will not restart
14	Igniter IGF	ECU fails to receive IGF singal more than 4-6 weeks in a row	Fuel injection stopped to protect catalyst
22	Engine Coolant Temperature	ECT > 138°C (280°F) or < -50°C (-58°F)	Standard value substituted for ECT signal, typically 80°C (176°F)
24	Intake Air Temperature	THA > 138°C (280°F) or < -50°C (-58°F)	Standard value substituted for THA signal, typically 20°C (68°F)
31/32	Air Flow Meter	Open or short detected signal circuit	Standard value substituted based on STA and ID singals
35	High Altitude Compensation	Open or short detected in HAC signal circuit	Standard value substituted for HAC; value equals 29.92 in. Hg
41	Throttle Position	Open or short detected in TPS signal	Standard value substituted for VTA; typically 0° or 30° based on IDL
52/53	Knock Sensor	Open or short detected in knock signal circuit or ECU detects internal fault	Maximum corrective retard applies to ESA

Fail-Safe Conditions, OBD II

DTC	Circuit Effected	Fail-Safe Operation	Fail-Safe Deactivation Conditions
P0100	Mass Air Flow	Ignition timing fixed at 5° Injection timing fixed •STA ON = 11.0 ms •IDL ON = 3.5 ms •IDL OFF = 6.3 ms	When fault is no longer detected
P0100	Intake Air Temperature	IAT fixed at 20°C (68°F)	When fault is no longer detected
P0115	Engine Coolant Temperature	ECT fixed at 80°C (176°F)	When fault is no longer detected
P0120	Throttle Position	TP fixed at 0%	CTP switch is ON with VTA between 0.1 to 0.95 volts
P0135 P0141 P0155	Oxygen Sensor Heater	Heater circuit effected is turned off	After ignition is switched off
P0325 P0330	Knock Sensor	Maximum knock retard	After ignition is switched off
P0720	A/T Speed Sensor	Gear shift program based on rpm and TP	When fault is no longer detected
P0753	Shift Solenoid A	Power to solenoid valve and lock-up solenoid valve is cut	When fault is no longer detected
P0758	Shift Solenoid B	Power to solenoid valve and lock-up solenoid valve is cut	When fault is no longer detected
P0773	Shift Solenoid E	Power to solenoid valve is cut	When fault is no longer detected
P1300	Igniter IGF	Fuel cut	After IGF is not detected for 2≈6 consecutive IGT signals (See Section 4, Primary Circuit SA)
P1605	Knock Control CPU	Maximum knock retard	When fault is no longer detected
P1765	Accumulator Pressure Linear Solenoid	Power to solenoid valve is cut	When fault is no longer detected

Readiness Tests Drive Patterns Examples

The following Readiness Tests drive patterns examples are a guide to the preconditions and drive patterns needed to operate the Non-Continuous monitors. Please consult the latest service information before performing the drive patterns.

EGR Monitor (All Except 1FZ-FE)

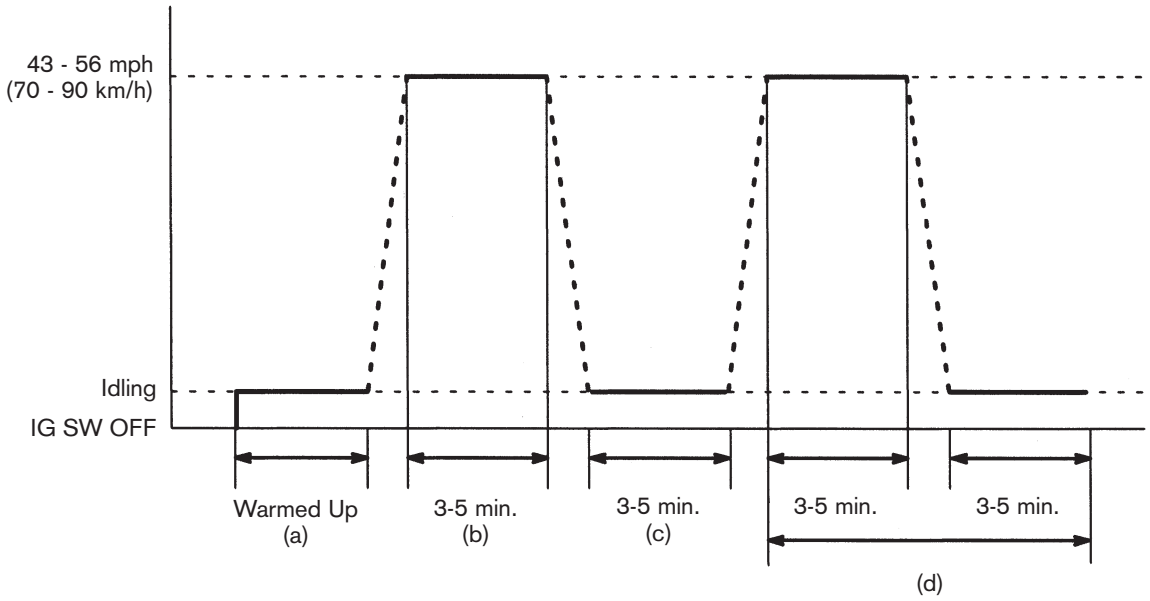

Fig.. H-1

TL874fH01

EGR Monitor (All Except 1FZ-FE)

Preconditions

The monitor will not run unless:

- MIL is OFF
- Altitude is 7800 feet (2400m) or less
- IAT (Intake Air) is -10°C (14°F) or greater

Drive Pattern

Connect the Diagnostic Tester to the DLC3 connector to check monitor status preconditions.

a) If IAT (Intake Air) is less than 10°C (50°F) when starting the engine, idle the engine for approximately 10 minutes.

b) Drive vehicle at 43 – 56 mph (70 – 90 km/h) for a period of 3 – 5 minutes.

NOTE

- **Do not allow the Throttle Position (TP) to exceed 30%.**
- **Drive with smooth throttle operation and avoid sudden acceleration.**

c) Stop vehicle and let engine idle for 3 – 5 minutes

d) Repeat steps "b" and "c" once

Observe status of Readiness Tests monitors. If readiness status does not switch to complete, go to the Non-Continuous Tests screen to see monitor status. If Non-Continuous Tests screen still shows Pass, ensure preconditions are met, turn ignition OFF, and then repeat steps "b" through "d".

EGR Monitor (For 1FZ-FE Engine)

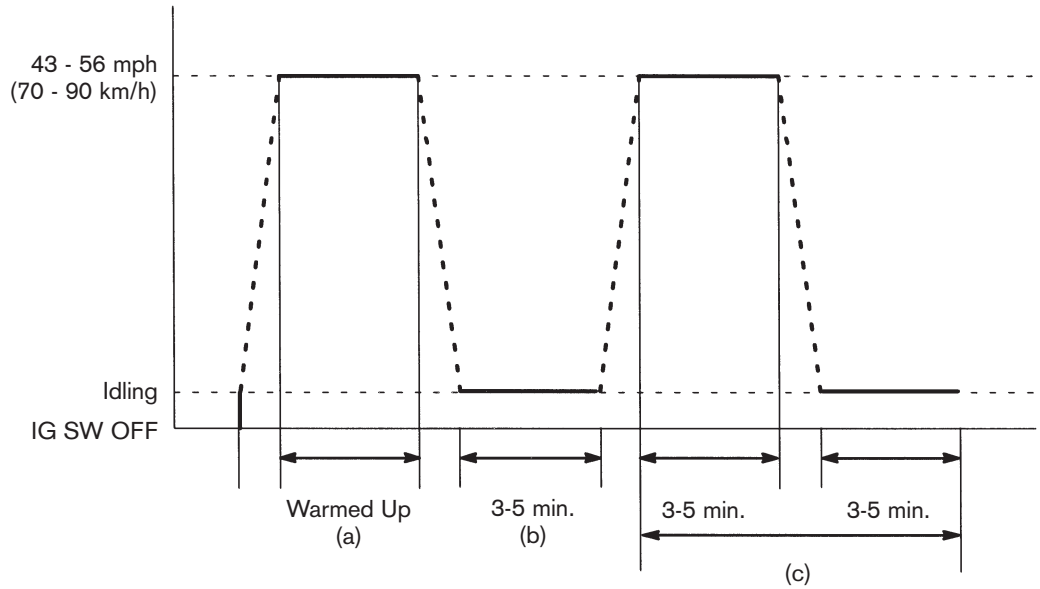

Fig.. H-2

TL874fH02

EGR Monitor (For 1FZ-FE Engine)

Preconditions

The monitor will not run unless:

- MIL is OFF
- Altitude is 7800 feet (2400m) or less
- IAT (Intake Air) is -10°C (14°F) or greater
- ECT (Coolant Temperature) is less than 40°C (104°F)

Drive Pattern

Connect the Diagnostic Tester to DLC3 to check monitor status and preconditions.

a) Start the engine and immediately begin driving vehicle at 43 - 56 mph (70 - 90 km/h) for a period of 3 - 5 minutes.

NOTE

- **Do not allow the Throttle Position (TP) to exceed 30 %.**
- **Drive with smooth throttle operation and avoid sudden acceleration.**

b) Stop vehicle and let engine idle for 3 - 5 minutes.

c) Repeat steps "a" and "b" once.

Observe status of Readiness Tests monitors. If readiness status does not switch to complete, go to the Non-Continuous Tests screen to see monitor status. If Non-Continuous Tests screen still shows Pass, ensure preconditions are met, turn ignition OFF, and then repeat steps "a" through "c".

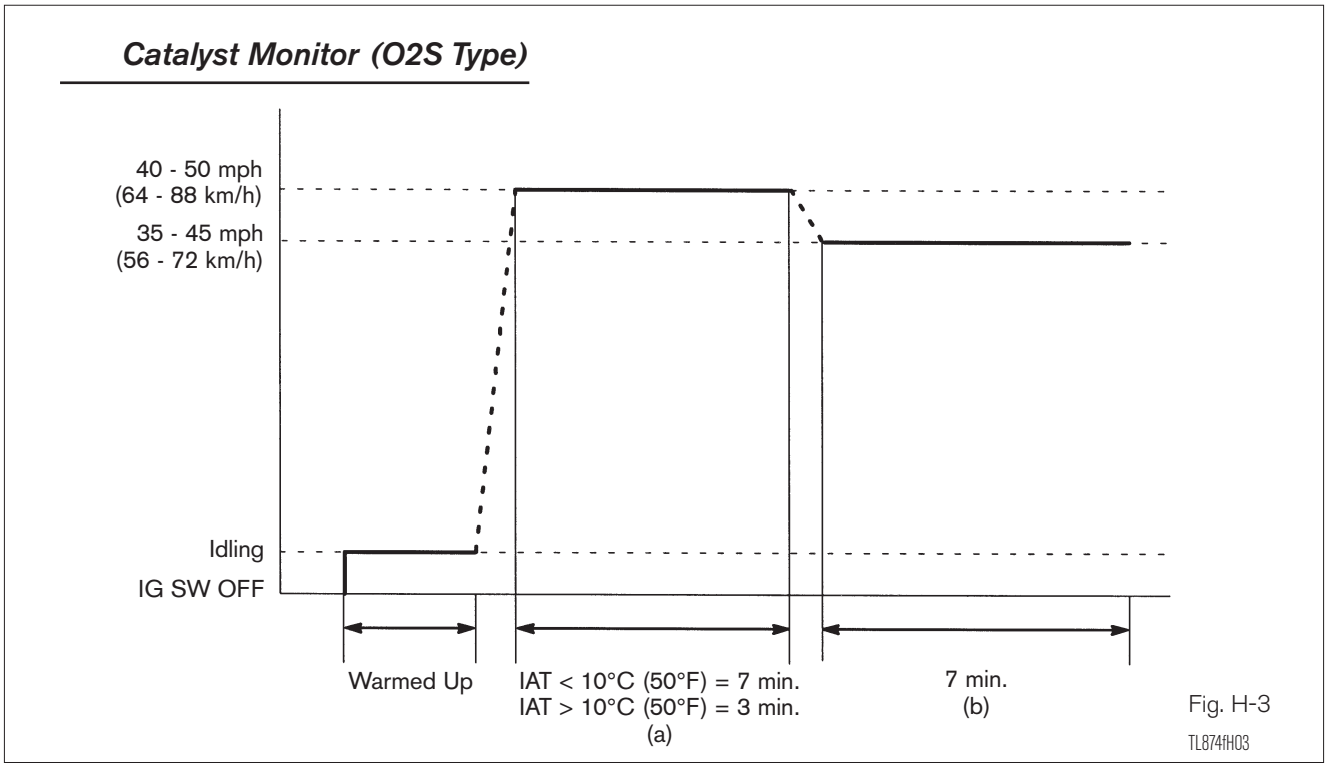

Fig. H-3

Catalyst Monitor (O2S Type)

Preconditions

The monitor will not run unless:

- MIL is OFF
- IAT (Intake Air) is 14°F (-10°C) or greater
- ECT (Coolant Temperature) is 176°F (80°C) or greater

NOTE

For 2002 and later MY vehicles:

- **The readiness test can be completed in cold ambient conditions (less than -10°C (14°F)), if the drive pattern is repeated a second time after cycling the ignition off.**

Drive Pattern

Connect the Diagnostic Tester to DLC3 to check monitor status and preconditions. Note the IAT (Intake Air) value during engine startup. The driving time must be adjusted during step (a) based upon IAT (Intake Air) value at startup.

a) Drive vehicle at 40 - 55 mph (64 - 88 km/h) for the time described below:

- If IAT (Intake Air) was less than 10°C (50°F) when engine started. then drive for 7 minutes.
- If IAT (Intake Air) was greater than 10°C (50°F) when engine started. then drive for 3 minutes.

b) Drive vehicle at 35 - 45 mph (56 - 72 km/h) for approximately 7 minutes.

NOTE

- **Drive with smooth throttle operation and avoid sudden acceleration.**
- **Drive with smooth throttle operation and avoid sudden deceleration as much as possible with the throttle fully closed.**

Observe status of Readiness Tests monitors. If readiness status does not switch to complete, go to the Non-Continuous Tests screen to see monitor status. If Non-Continuous Tests screen still shows Pass, ensure preconditions are met, turn ignition OFF, and then repeat steps "a" through "b".

Catalyst Monitor (A/F Sensor Type)

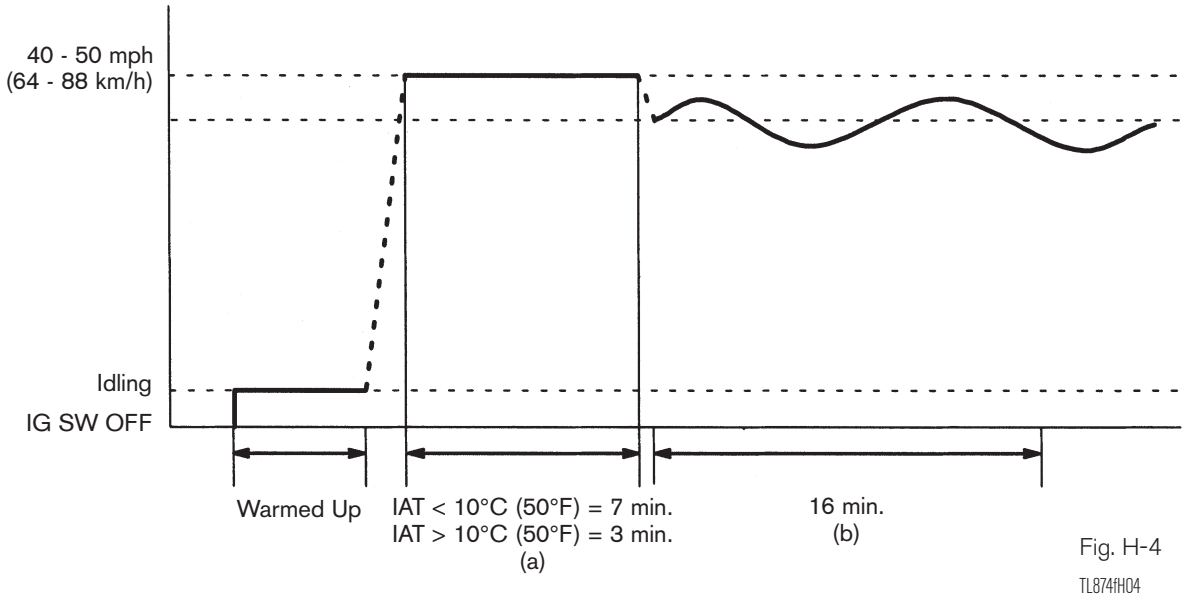

Fig. H-4

TL874fH04

Catalyst Monitor (A/F Sensor Type)

Preconditions

The monitor will not run unless:

- MIL is OFF
- IAT (Intake Air) is -10° C (14 °F) or greater
- ECT (Coolant Temperature) is 80° C (176 °F) or greater

NOTE **For 2002 and later MY vehicles:**

- **The readiness test can be completed in cold ambient conditions (less than -10°C (14°F)), if the drive pattern is repeated a second time after cycling the ignition off.**

Drive Pattern

Connect the Diagnostic Tester to DLC3 to check monitor status and preconditions. Note the IAT value (Intake Air) during engine startup. The driving time must be adjusted during step (a) based upon IAT value (Intake Air) at startup.

a) Drive vehicle at 40 - 55 mph (64 - 88 km/h) for the time described below:

- If IAT (Intake Air) was less than 10°C (50°F) when engine started then drive for 7 minutes
- If IAT (Intake Air) was greater than 10°C (50°F) when engine started then drive for 3 minutes.

b) Drive vehicle allowing speed to fluctuate between 35 - 45 mph (56 - 72 km/h) for about 16 minutes.

NOTE

- **Drive with smooth throttle operation and avoid sudden acceleration.**
- **Drive with smooth throttle operation and avoid sudden deceleration as much as possible with the throttle fully closed.**

Observe status of Readiness Tests monitors. If readiness status does not switch to complete, go to the Non-Continuous Tests screen to see monitor status. If Non-Continuous Tests screen still shows Pass, ensure preconditions are met, turn ignition OFF, and then repeat steps "a" and "b".

EVAP Monitor (Early Type, Non-Intrusive Internal Pressure Montior

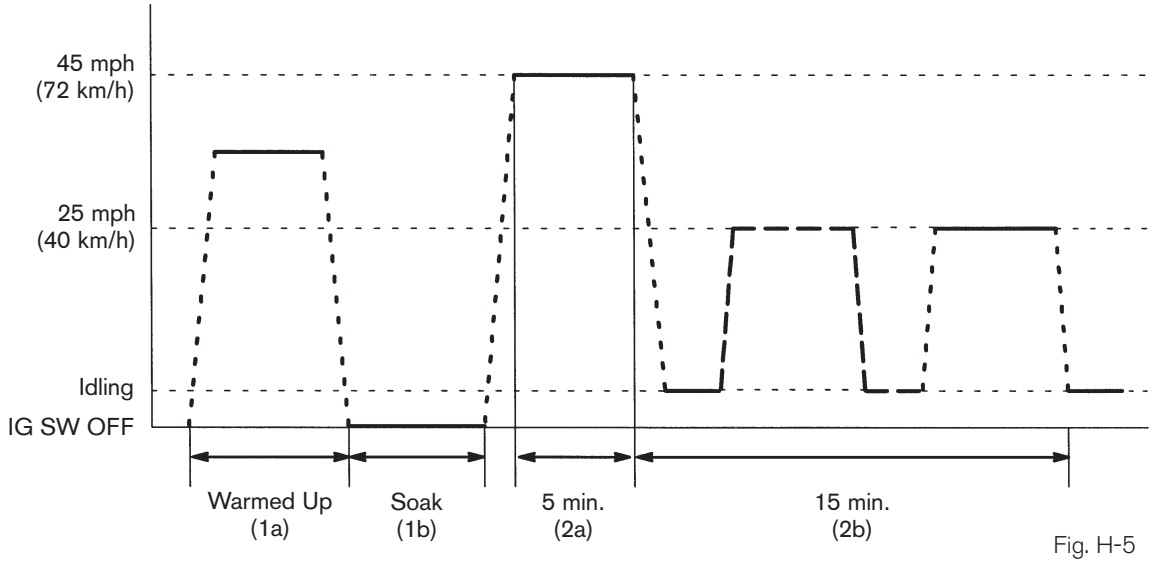

Fig. H-5

TL874fH05

EVAP Monitor (Early Type, Non-Intrusive Internal Pressure Monitor)

Cold Soak Preconditions

The monitor will not run unless:

- MIL is OFF
- Altitude is 7800 feet (2400m) or less

NOTE **For faster operation, the fuel level should be approximately 1/2 to 3/4 full.**

IMPORTANT **A cold soak must be performed prior to conducting the drive pattern to complete the Internal Pressure Readiness Monitor.**

Cold Soak Procedure

1a) Start the engine and allow ECT (Coolant Temperature) to reach 80°C (176°F) or greater

1b) Let vehicle cold soak for 8 hours or until the difference between IAT (Intake Air) and ECT (Coolant Temperature) is less than 7°C (13°F)

Drive Pattern Preconditions

The monitor will not run unless:

- MIL is OFF
- Altitude is 7800 feet (2400m) or less
- ECT (Coolant Temperature) is between 4.4°C - 35°C (40°F and 95°F)
- IAT (Intake Air) is between 4.4°C - 35°C (40°F and 95°F)
- Cold Soak Procedure has been completed

NOTE

- **Before starting the engine, the difference between ECT (Coolant Temperature) and IAT (Intake Air) must be less than 7°C (13°F)**

Drive Pattern Procedure

- Connect the Diagnostic Tester to DLC3 to check monitor status and preconditions.
- Release pressure in fuel tank by removing and then reinstalling the fuel tank cap.
- Start the engine and begin driving as directed.

NOTE

- **Do not turn the ignition off until drive pattern is complete.**
- **Drive on smooth roads to reduce excessive fuel sloshing.**

2a) Start the engine and immediately begin driving at approximately 45 mph (72km/h) for approximately 5 minutes.

2b) Drive vehicle at approximately 25 mph (40 km/h) for about 15 minutes and include a minimum of two stops for approximately 30 seconds.

Observe status of Readiness Tests monitors. If readiness status does not switch to complete, go to the Non-Continuous Tests screen to see monitor status. If Non-Continuous Tests screen still shows Pass, ensure preconditions are met, turn ignition OFF, repeat step"2b".

Cold Soak Preconditions

EVAP Monitor (Late Type, Intrusive, Vacuum Pressure Monitor

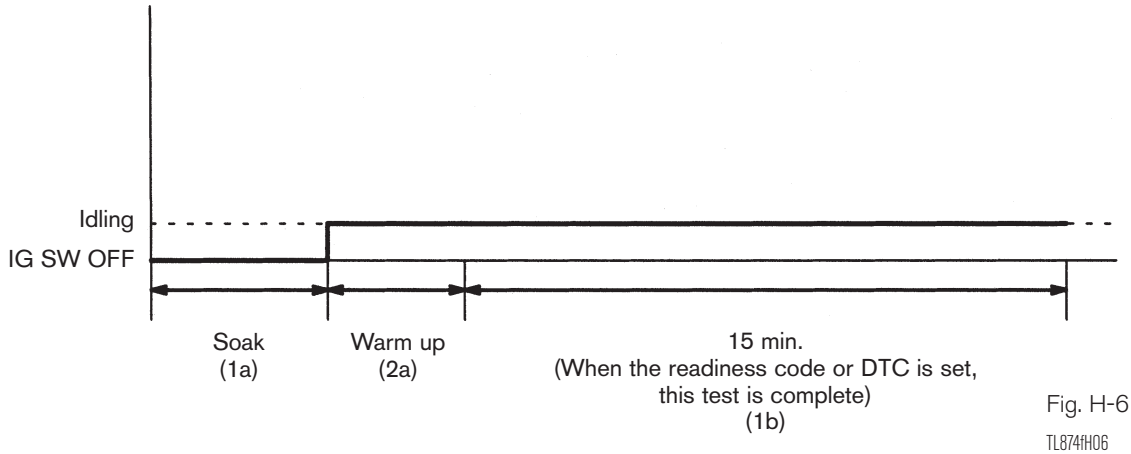

Fig. H-6

TL874fH06

EVAP Monitor (Late Type, Intrusive Vacuum Pressure Monitor)

The monitor will not run unless:

- MIL is OFF
- Altitude is 7800 feet (2400m) or less

NOTE

For faster operation, the fuel level should be approximately 1/2 to 3/4 full.

Cold Soak Procedure

1a) Let the vehicle cold soak for 8 hours or until the difference between IAT (Intake Air) and ECT (Coolant Temperature) is less than 7°C (13°F).

Drive Pattern Preconditions

The monitor will not run unless:

- MIL is OFF
- Altitude is 7800 feet (2400m) or less
- ECT (Coolant Temperature) is between 4.4°C - 35°C (40°F and 95°F)
- IAT (Intake Air) is between 4.4°C - 35°C (40°F and 95°F)

- Cold Soak Procedure has been completed
- Before starting the engine, the difference between ECT (Coolant Temperature) and IAT (Intake Air) must be less than 7°C (13°F)

NOTE

- **2002 and later MY vehicles the readiness test can be completed in cold ambient conditions (less than 4.4°C (40°F) and/or high altitudes (more than 7800 feet (2400m)) if the drive pattern is repeated a second time after cycling the ignition OFF.**

Drive Pattern Procedure

- Connect the Diagnostic Tester to the DLC3 to check monitor status and preconditions.
- Release pressure in the fuel tank by removing and then reinstalling the fuel tank cap.

2a) Start the engine and allow it to idle until ECT (Coolant Temperature) is 75°C (167°F) or greater.

1b) Allow the engine to idle with the A/C ON (to create a slight load) for 15 minutes.

NOTE

- **If vehicle is not equipped with A/C put a slight load on the engine by:**

  1) Securely set the parking brake.

  2) Block the drive wheels with wheel chocks.

  3) Allow vehicle to idle in drive for 15 minutes.

Observe status of Readiness Tests monitors. If readiness status does not switch to complete, go to the Non-Continuous Tests screen to see monitor status. If Non-Continuous Tests screen still shows Pass, ensure preconditions are met by turning the ignition OFF; then, allow vehicle to idle as directed in step 1b for an additional 35 minutes.

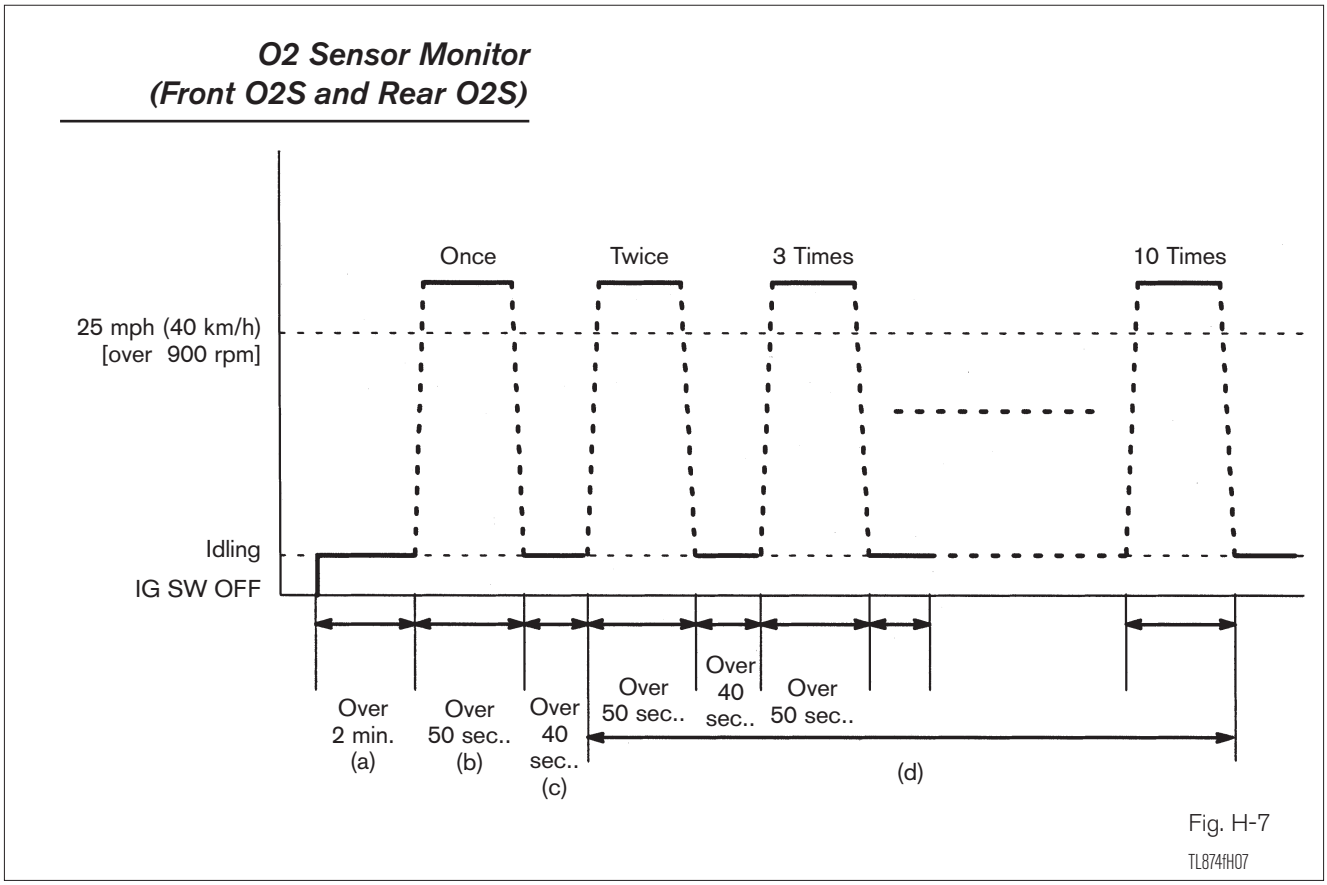

O2 Sensor Monitor (Front O2S & Rear O2S)

Preconditions

The monitor will not run unless:

- MIL is OFF

Drive Pattern

Connect the Diagnostic Tester to DLC3 to check monitor status and preconditions.

a) Start the engine and allow to idle for 2 minutes or more.

b) Drive vehicle at 25 mph (40 km/h) or more for at least 50 seconds.

c) Stop vehicle and allow engine to idle for 40 seconds or more.

d) Perform steps "b" and "c" ten times.

Observe status of Readiness Tests monitors. If readiness status does not switch to complete, go to the Non-Continuous Tests screen to see monitor status. If Non-Continuous Tests screen still shows Pass, ensure preconditions are met, turn ignition OFF, and then repeat steps "a" through "d".

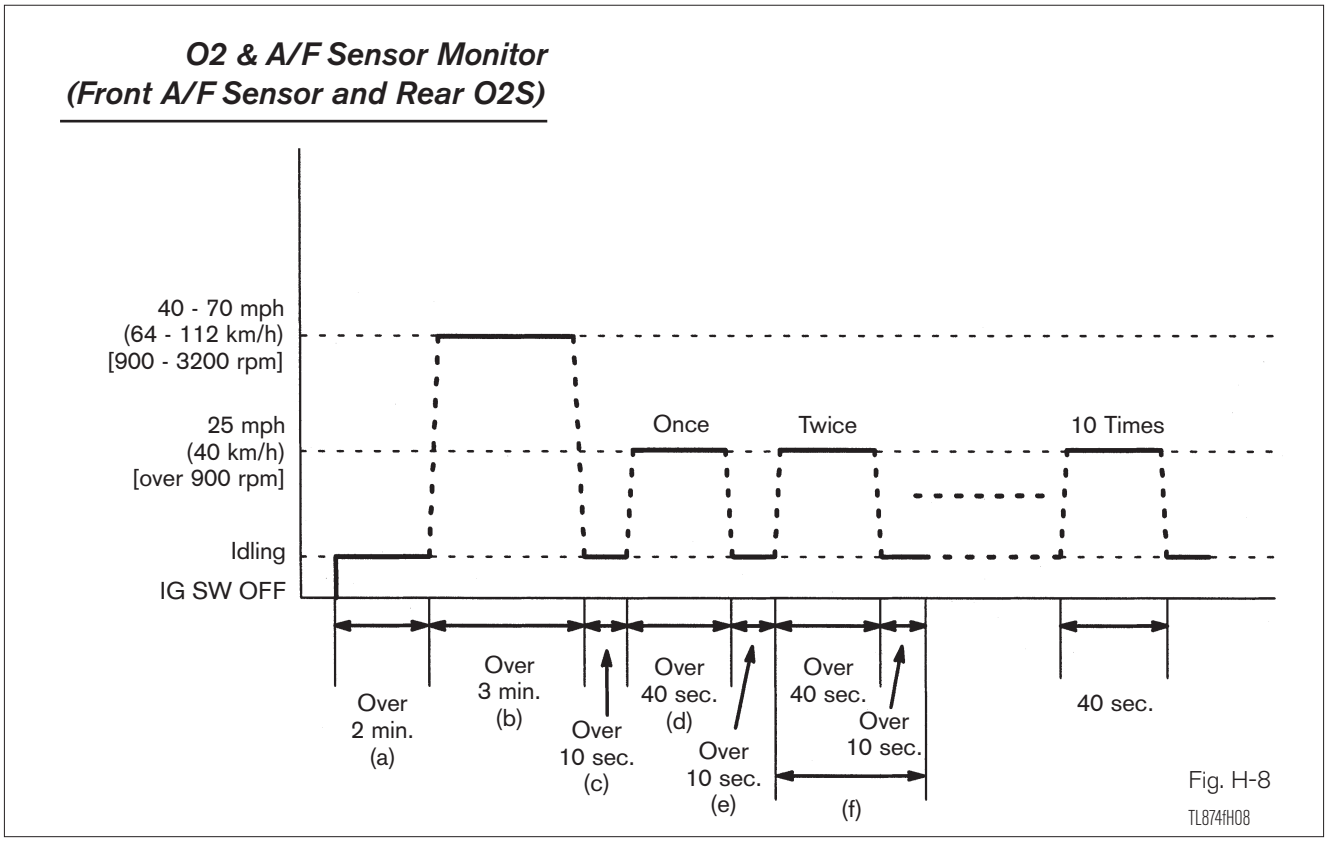

O2 & A/F Sensor Monitor (Front A/F Sensor & Rear O2S)

Preconditions

The monitor will not run unless:

- MIL is OFF

Drive Pattern

Connect the Diagnostic Tester to DLC3 to check monitor status and preconditions.

a) Start the engine and allow to idle for 2 minutes or more.

b) Drive vehicle at 40 - 70 mph (64 - 112 km/h) or more for at least 3 seconds.

c) Stop vehicle and allow engine to idle for 10 seconds or more.

d) Drive vehicle at 25 mph (40 km/h) for at least 40 seconds or more.

e) Stop vehicle and allow engine to idle for 10 seconds or more.

f) Perform steps "d" and "e" ten times.

Observe status of Readiness Tests monitors. If readiness status does not switch to complete, go to the Non-Continuous Tests screen to see monitor status. If Non-Continuous Tests screen still shows Pass, ensure preconditions are met, turn ignition OFF, and then repeat steps "a" through "f".

O2 & A/F Sensor Heater Monitor

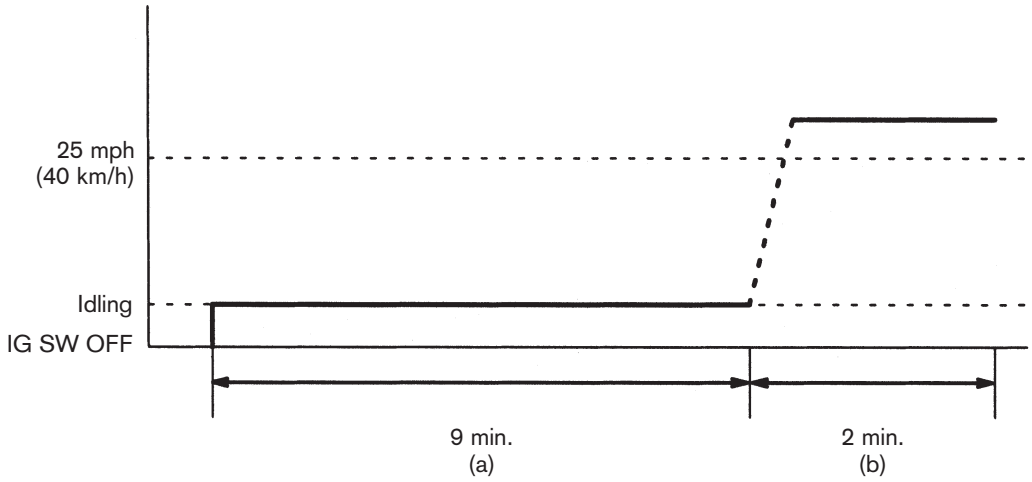

Fig. H-9

TL874fH09

O2 & A/F Sensor Heater Monitor

Preconditions

The monitor will not run unless:

- MIL is OFF

Drive Pattern

Connect the Diagnostic Tester to DLC3 to check monitor status and preconditions.

a) Start the engine and allow to idle for 9 minutes.

b) Drive vehicle at 25 mph (40 km/h) or more for at least 2 minutes.

If readiness status does not switch to complete, ensure preconditions are met, turn ignition off and then repeat steps "a" and "b".

Appendix F

TechView Guide

Guide Contents:

TechView has been designed to assist technicians in quickly diagnosing vehicles by graphing Real-Time Data, Snapshot Data, DTC Information, OBD System Monitor, and Freeze Frame Data. The following guide will navigate you through the extensive features it has to offer.

Tools and Equipment

- Diagnostic Tester
- Computer with TechView
- Vehicle

Section 1: Getting Started

1. Connect Diagnostic Tester
2. Create New User
3. Enter File Information
4. View Real-Time Data
5. View Specific Data List
6. Change Parameters
7. Remove and Add Parameters

Section 2: Graph Data

8. Graph Data

Section 3: Record and Retrieve Real-Time Data

9. Record and Retrieve Real-Time Data
10. Add a Record

Section 4: Take Snapshot Data

11. Take Snapshot Data

Section 5: DTC Information

12. View DTC Information

Section 6: Save File

13. Save File
14. Print File

Screen Commands Overview

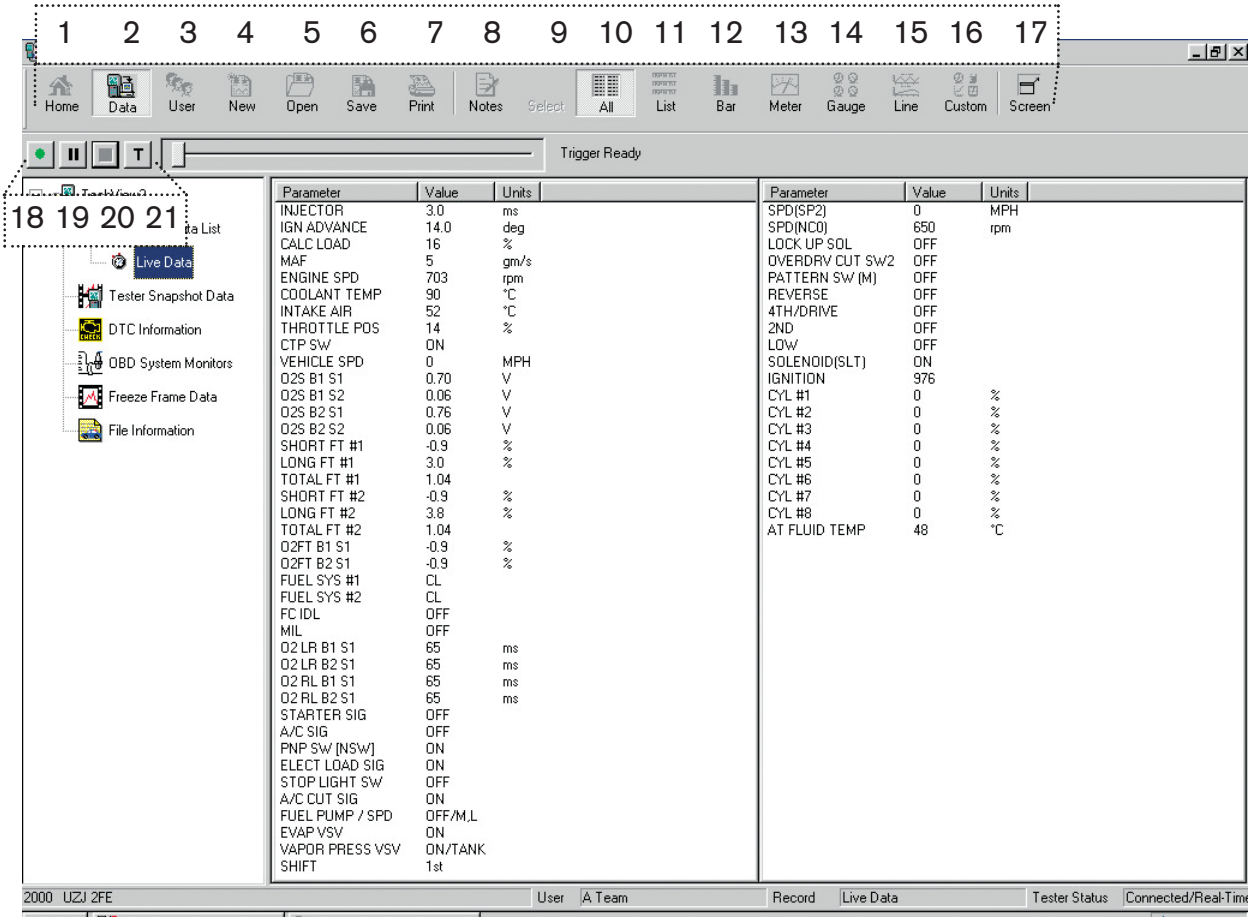

1. Home Page
2. Select Data
3. Select User
4. Open New File
5. Open Existing File
6. Save File
7. Print File
8. Record Notes
9. Select Parameters
10. Select All Data
11. List Specific Data
12. Bar Graph
13. Meter Graph
14. Gauge Graph
15. Line Graph
16. Custom Graph
17. Full Screen
18. Trigger
19. Pause
20. Stop
21. Trigger Setup

NOTE: A Help button is also located at the top of the screen to aid in any questions.

Fig. F-1

TL874fF01

SECTION 1: Getting Started

1. Connect the Diagnostic Tester to DCL 3 in the vehicle. Place the Diagnostic Tester next to the TIS machine and plug the RS232 line into the tester. Turn the Diagnostic Tester ON and go into the Enhanced OBD II mode.

   Note: TechView supports serial and V-BoB data, but does not support NVH or oscilloscope data.

2. Create a new **User**. Follow the diagram below and enter your name. Having your own user name will keep your files separate from other technicians.

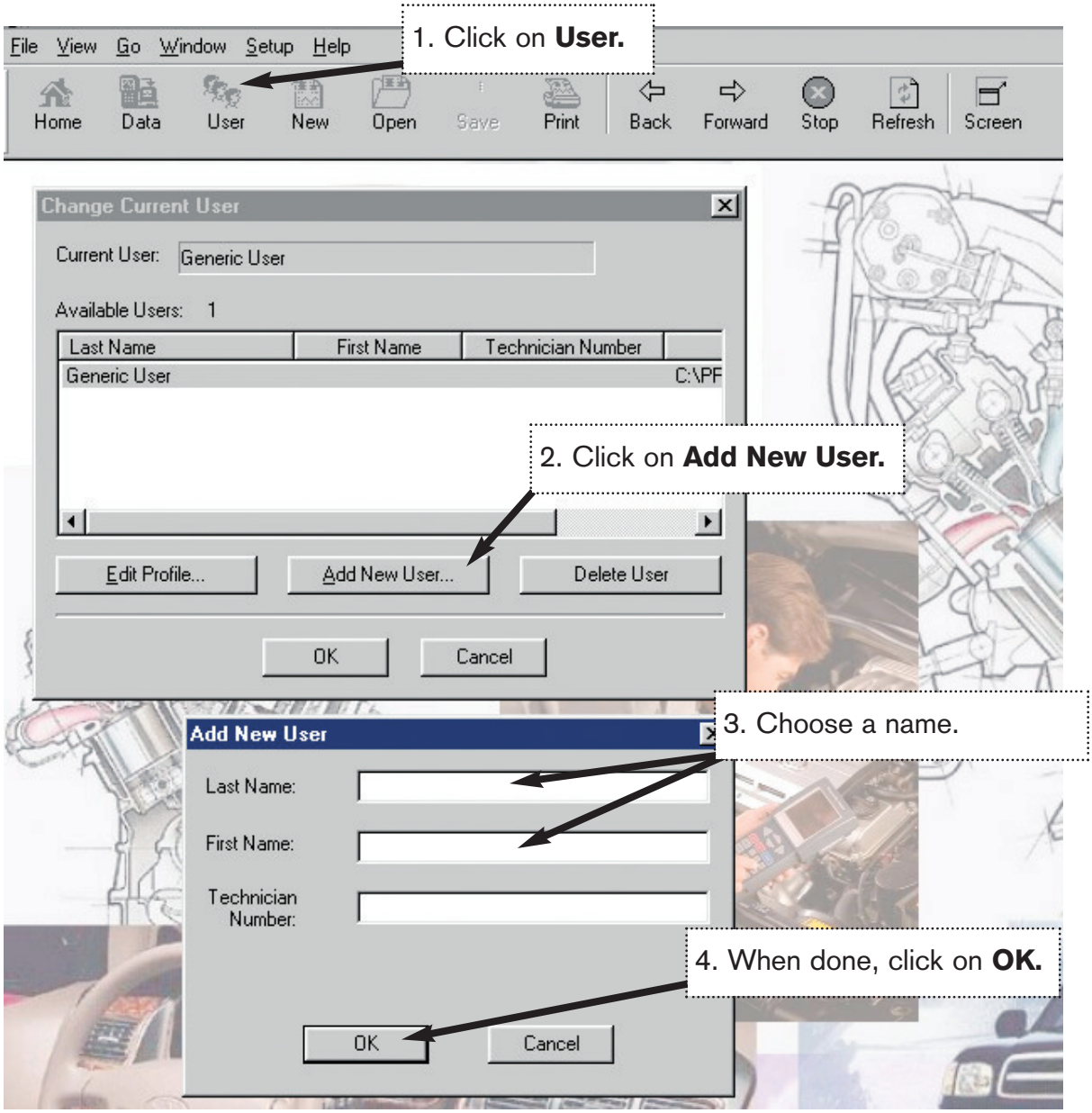

Fig. F-2

TL874fF02

2a. After creating a new User, open a New document.

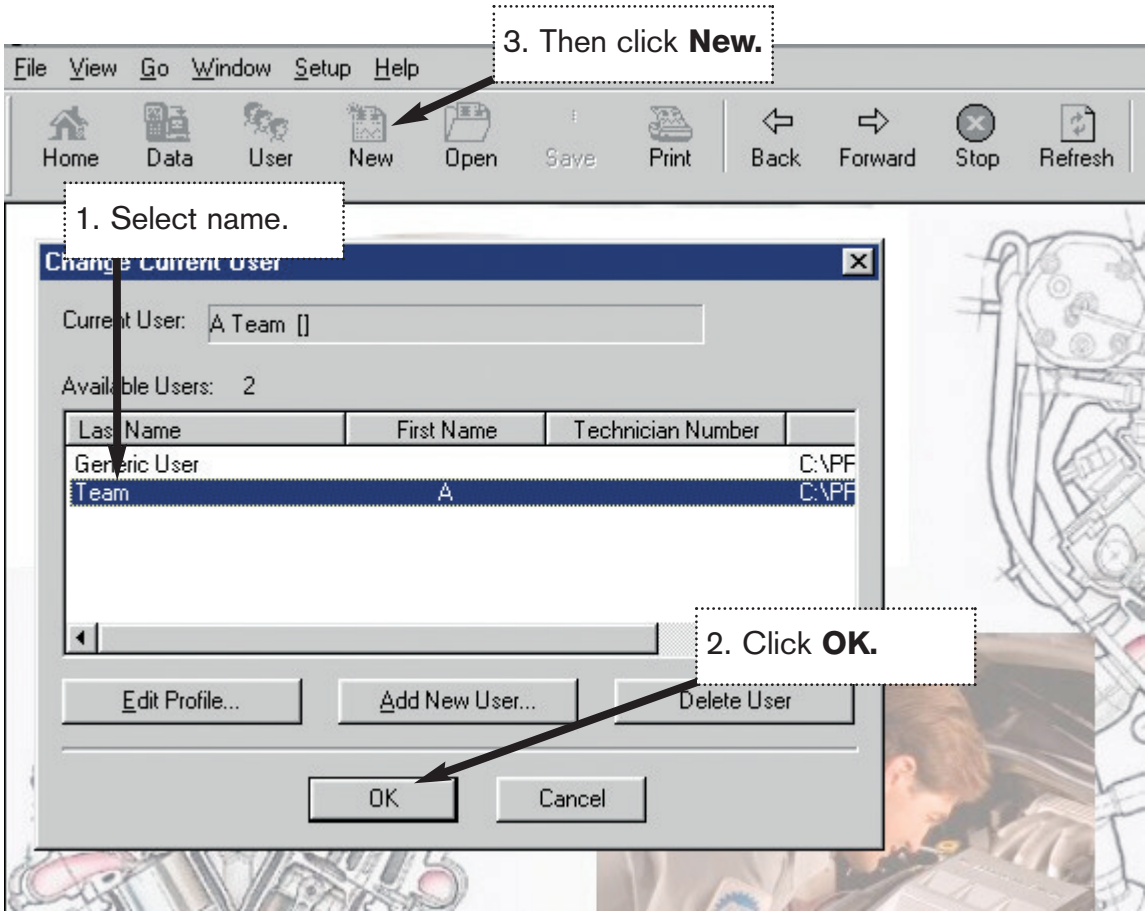

Fig. F-3

TL874IF03

3. Enter File Information. This screen allows you to store vehicle diagnostic information as well as shop information.

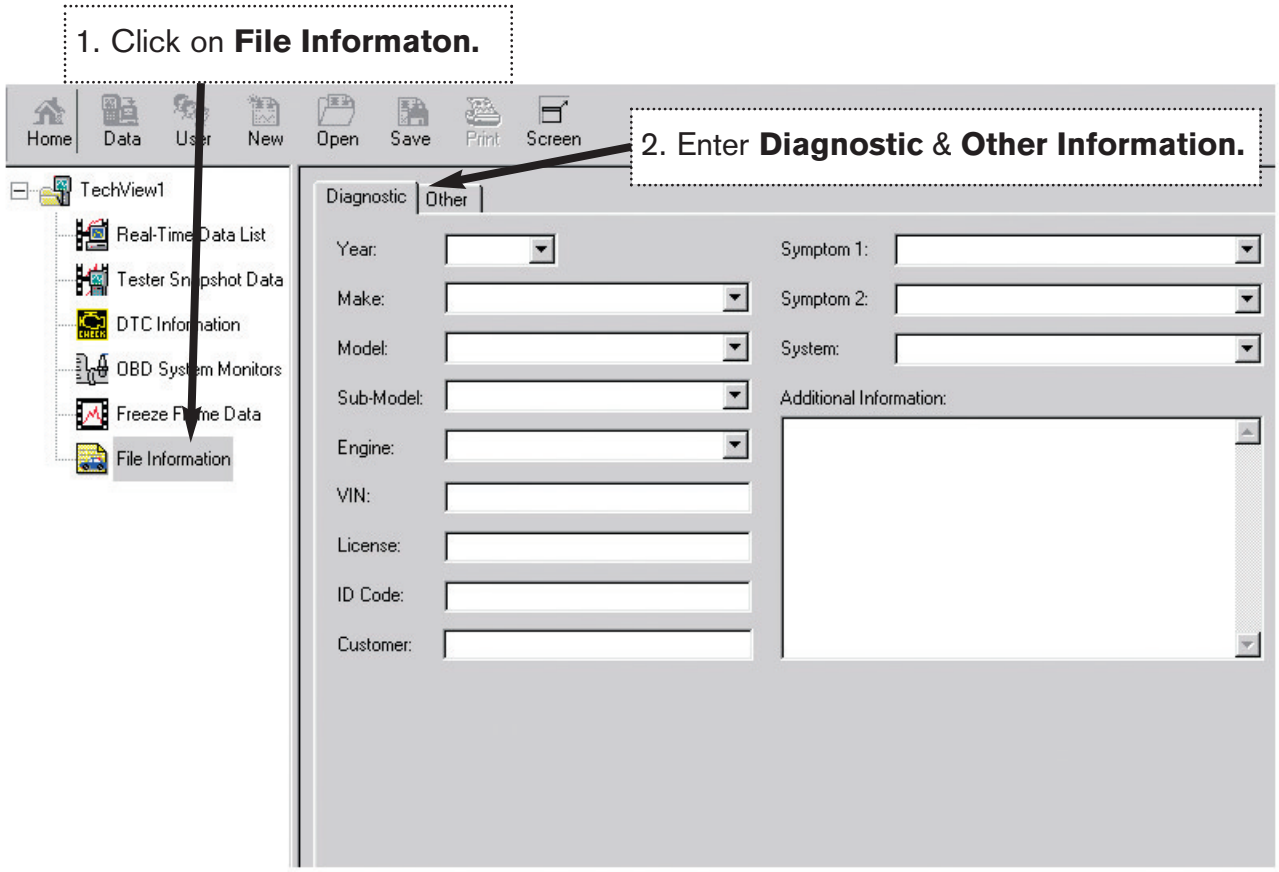

Fig. F-4
TL874fF04

4. View the Real-Time Data List. To view live tester data, follow the steps below to get into the correct mode.

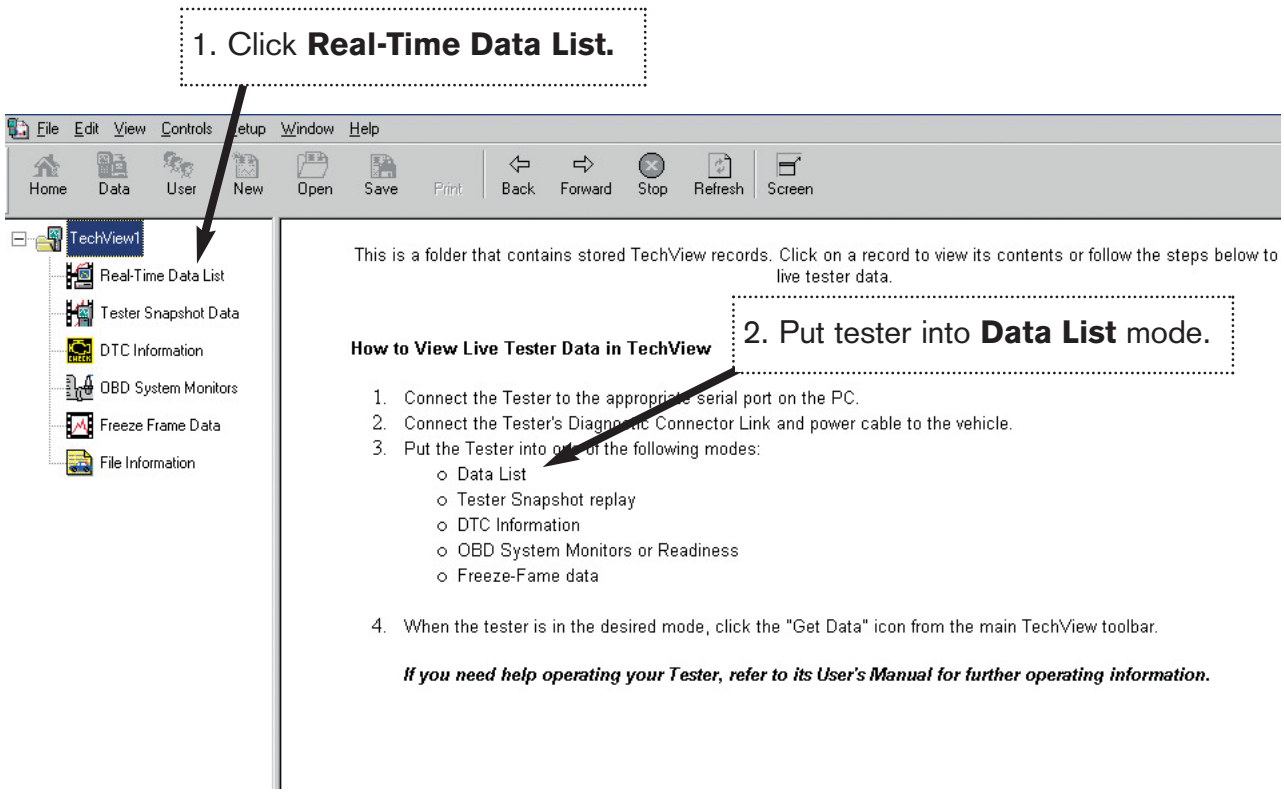

Fig. F-5

TL874IF05

Note: If you receive the error message listed below after clicking the Data button, check the RS232 line (the cable from the computer to the tester) and then the DLC 3 cable (from the tester to the vehicle) are in place. If you are still receiving an error message, reboot the computer.

Error - No response from the Diagnostic Tester. Ensure the Diagnostic Tester is properly connected. (Code: 325)

If the error message still occurs, refer to TSB SS0004-00 for Diagnostic Tester warranty repair.

4a. View Live Data.

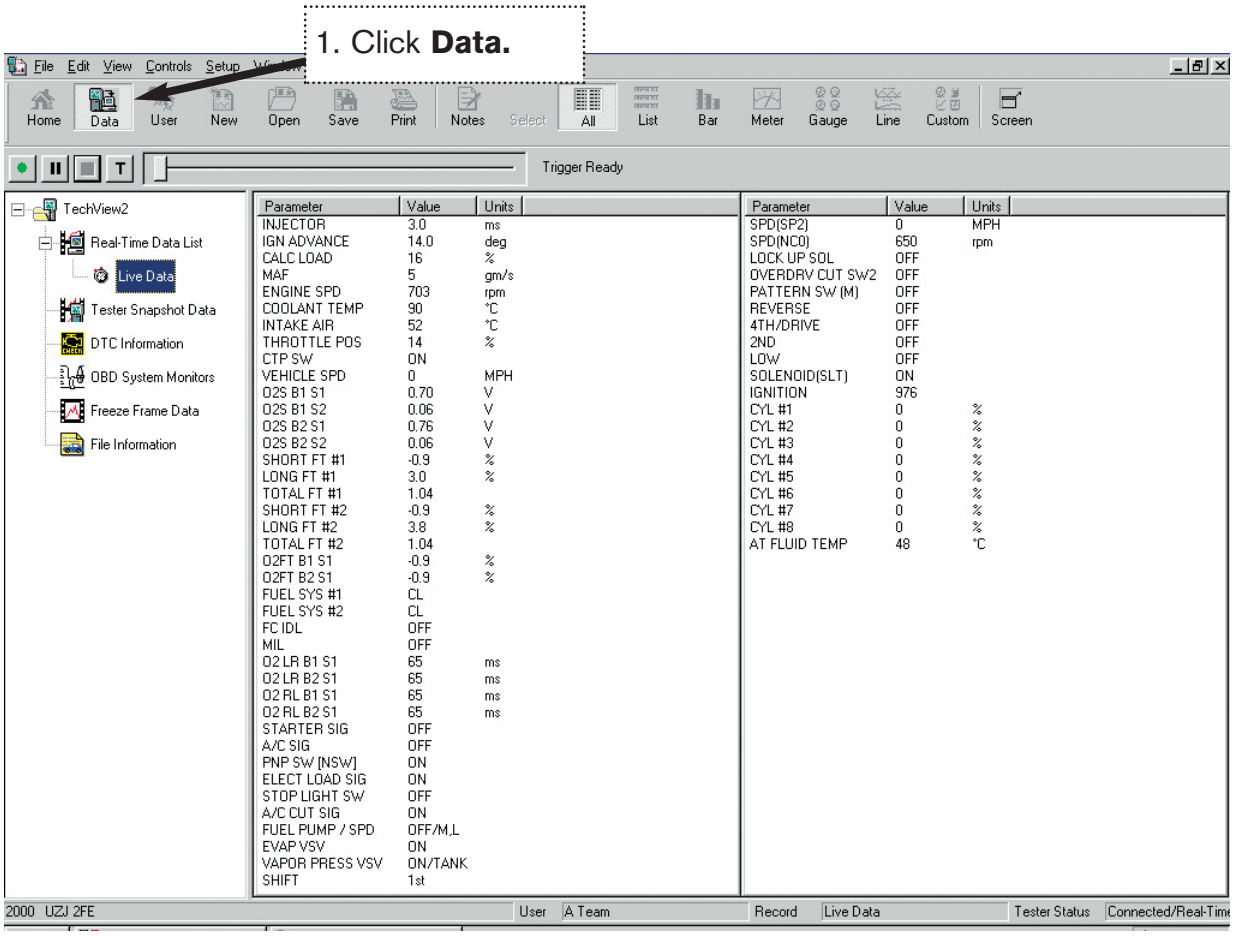

Fig. F-6

TL874fF06

5. View a specific data list.

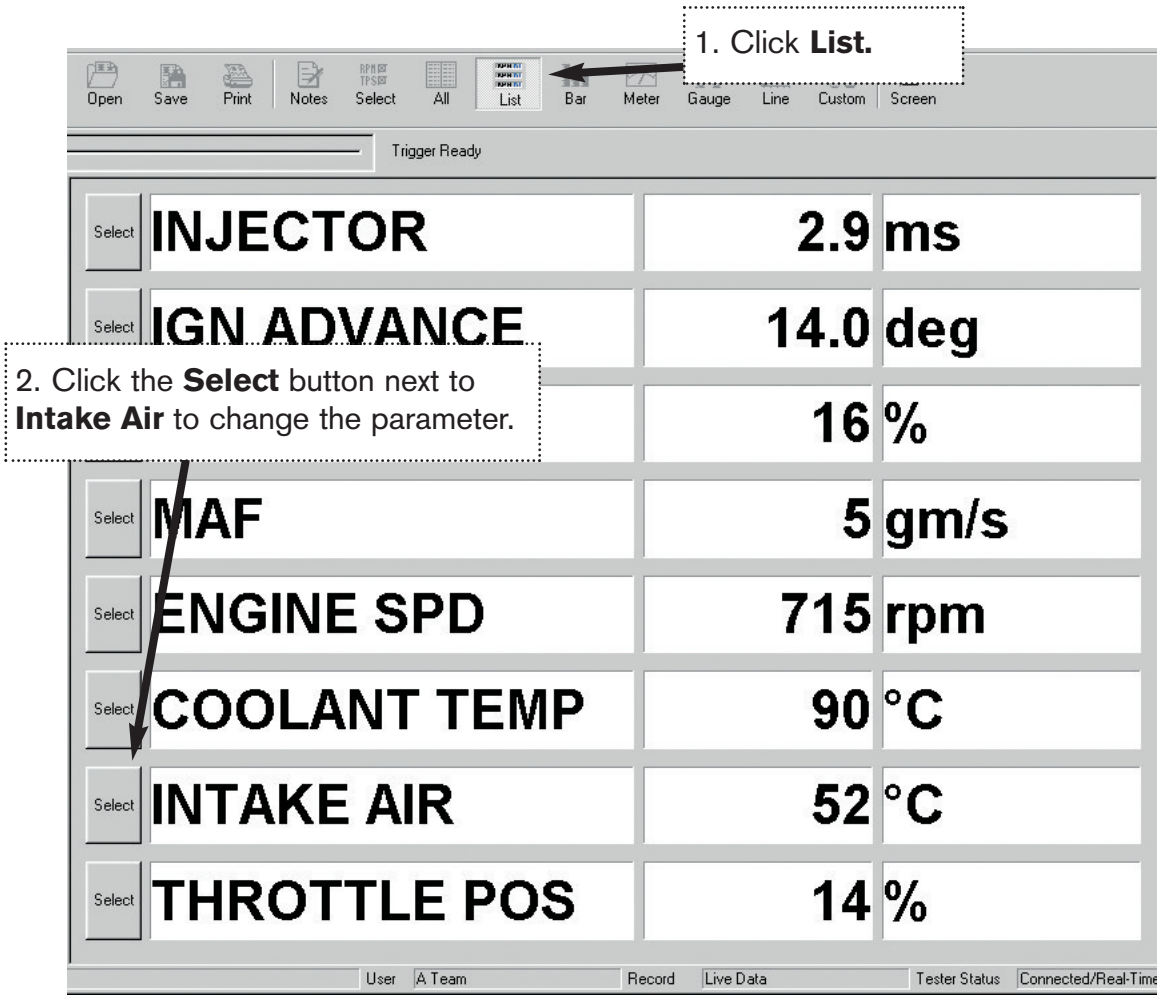

Fig. F-7

TL874IF07

6. Change the parameters. This function allows you to view and compare specific data.

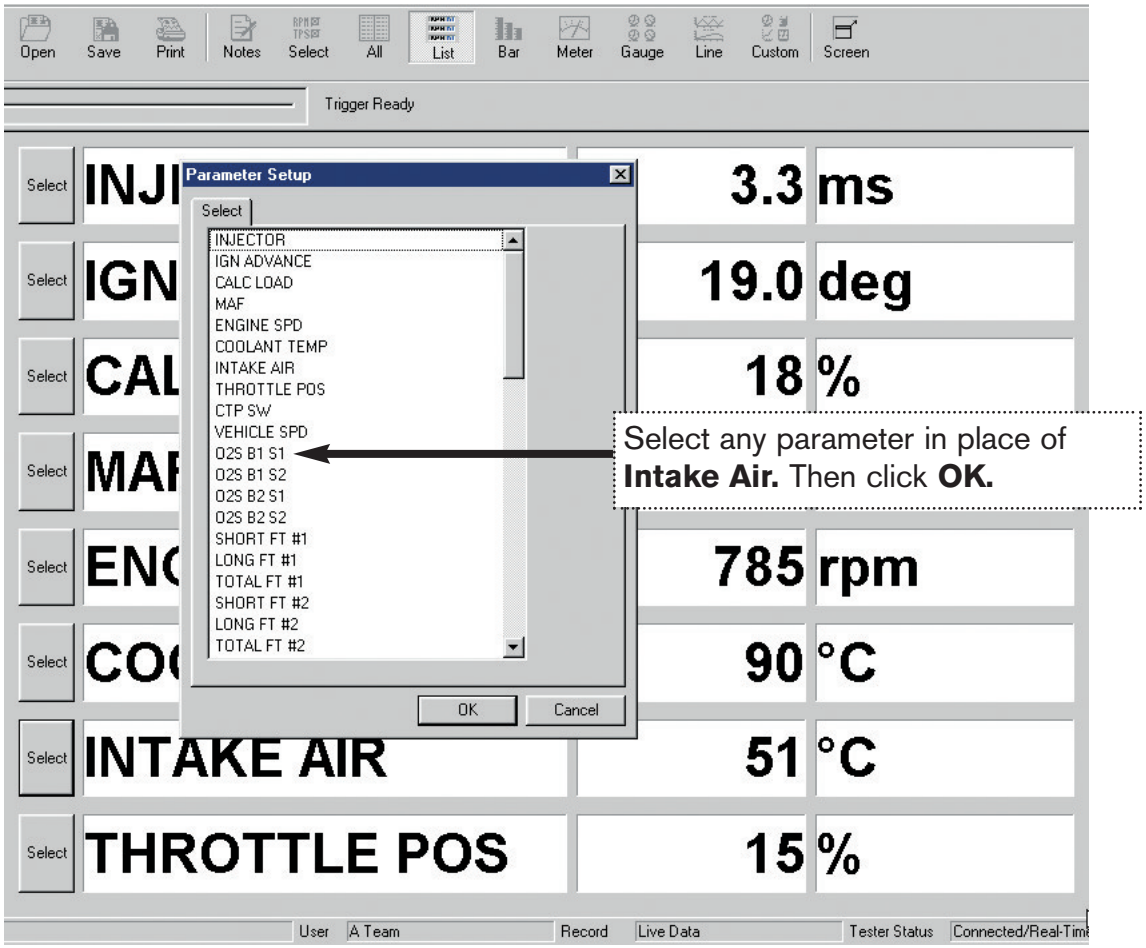

Fig. F-8

TL874fF08

7. Remove and add parameters. In this screen, up to eight parameters can be selected at one time.

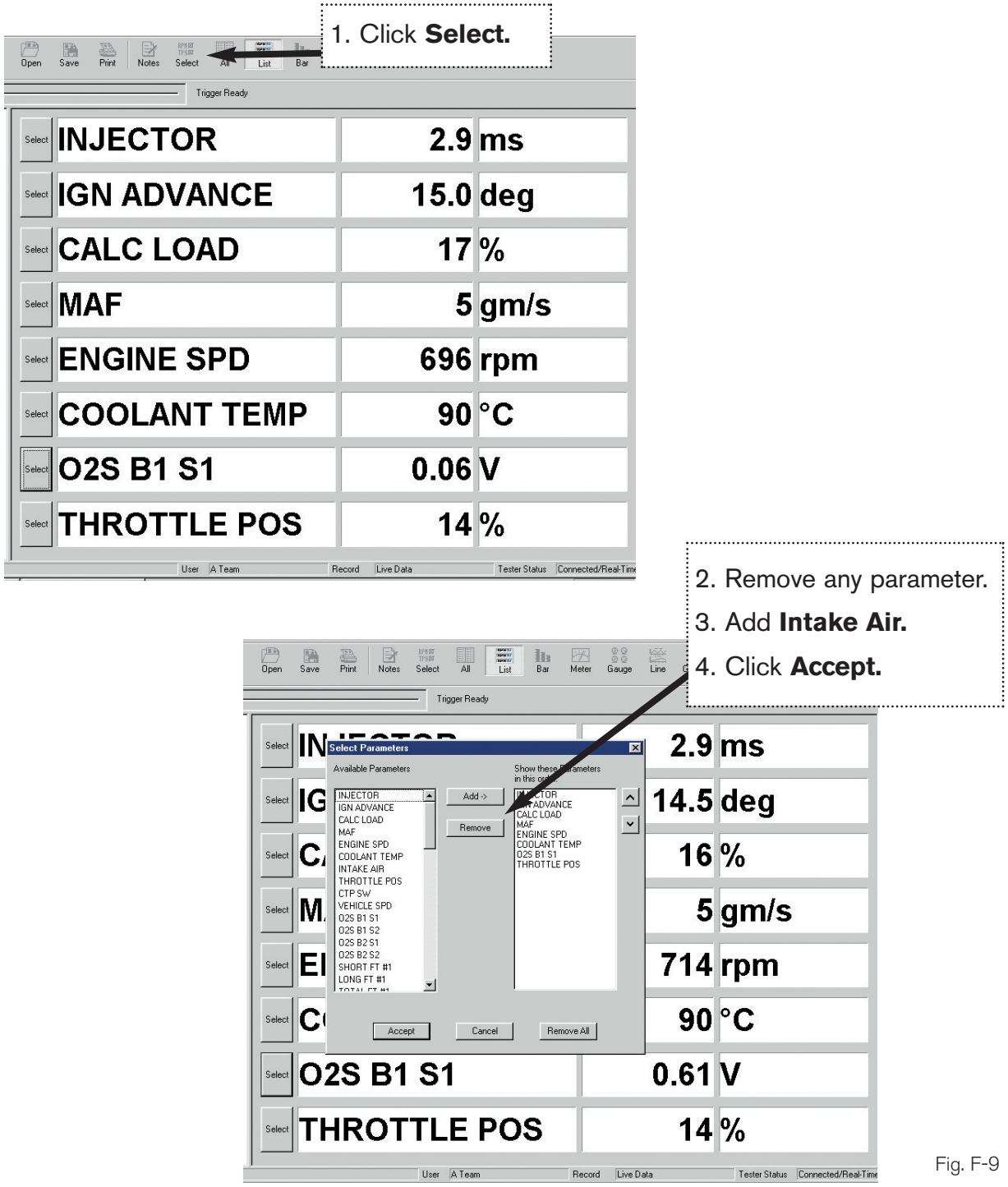

Fig. F-9

TL874fF09

Note: Selecting fewer parameters with the Diagnostic Tester will NOT allow the program to run faster. The refresh rate is only as fast as the ECM.

SECTION 2: Graph Data

8. Graph Data. The next few screens will show you several ways to graph vehicle data.

Note: Notice that the red represents the maximum and the green represents the minimum in all graphs.

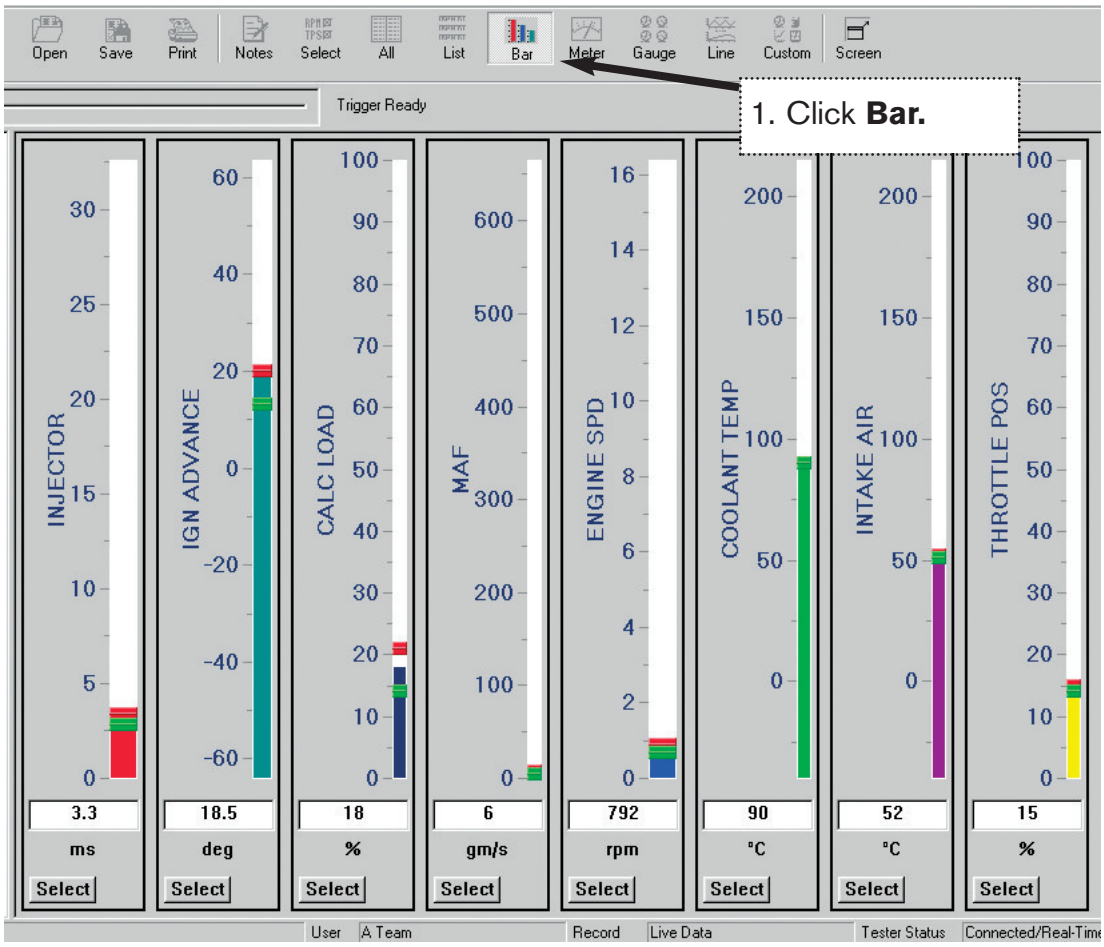

Fig. F-10

TL874fF10

8a. View the Meter and Gauge graphing options.

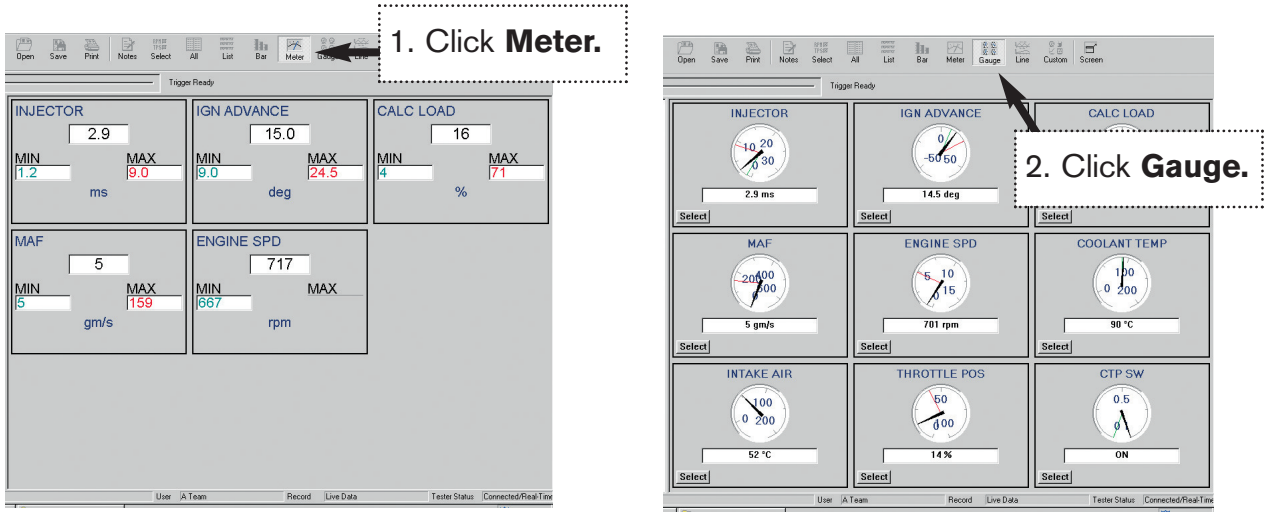

Fig. F-11

TL874fF11

8b. You can view several line graphs at one time. By clicking on the graph button you can view the graphs one at a time.

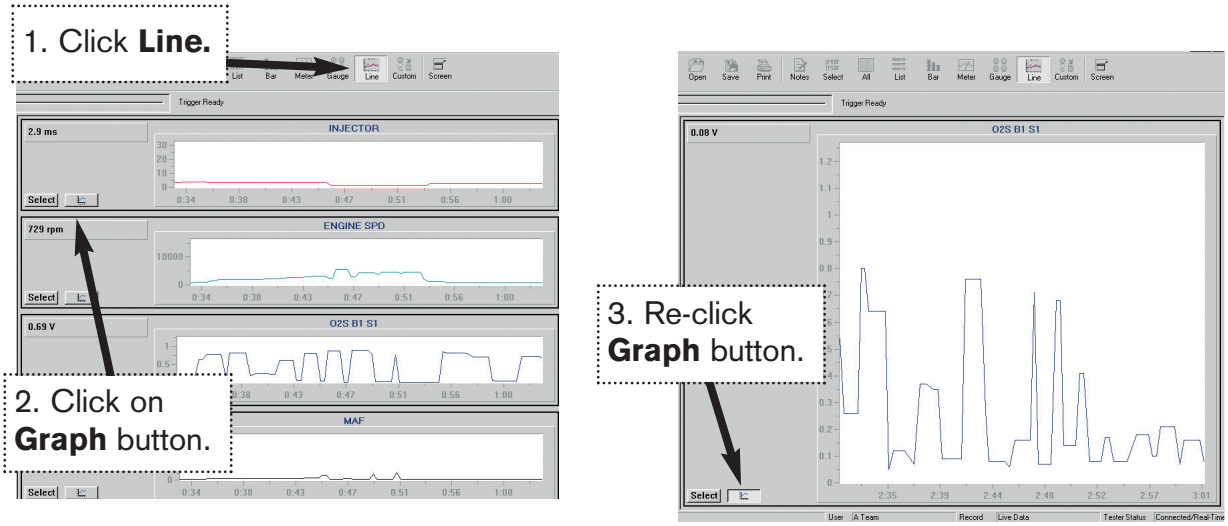

Fig. F-12

TL874fF12

8c. Another option is to watch several line graphs at one time in two different views.

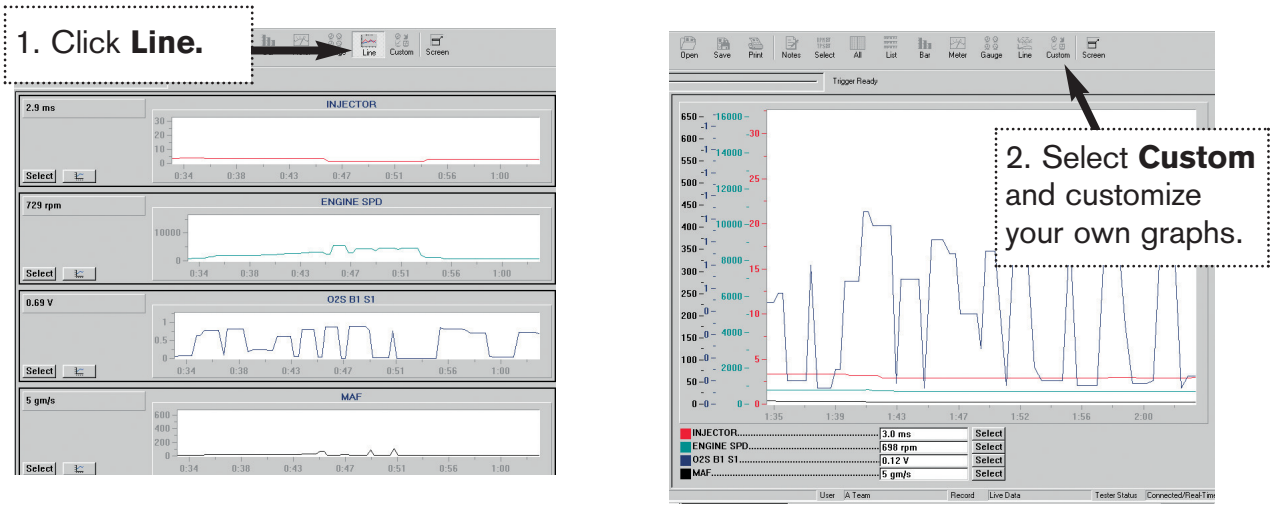

Fig. F-13

TL874fF13

8d. Customize Graph. This option will allow you to graph the data using any or all types of graphs.

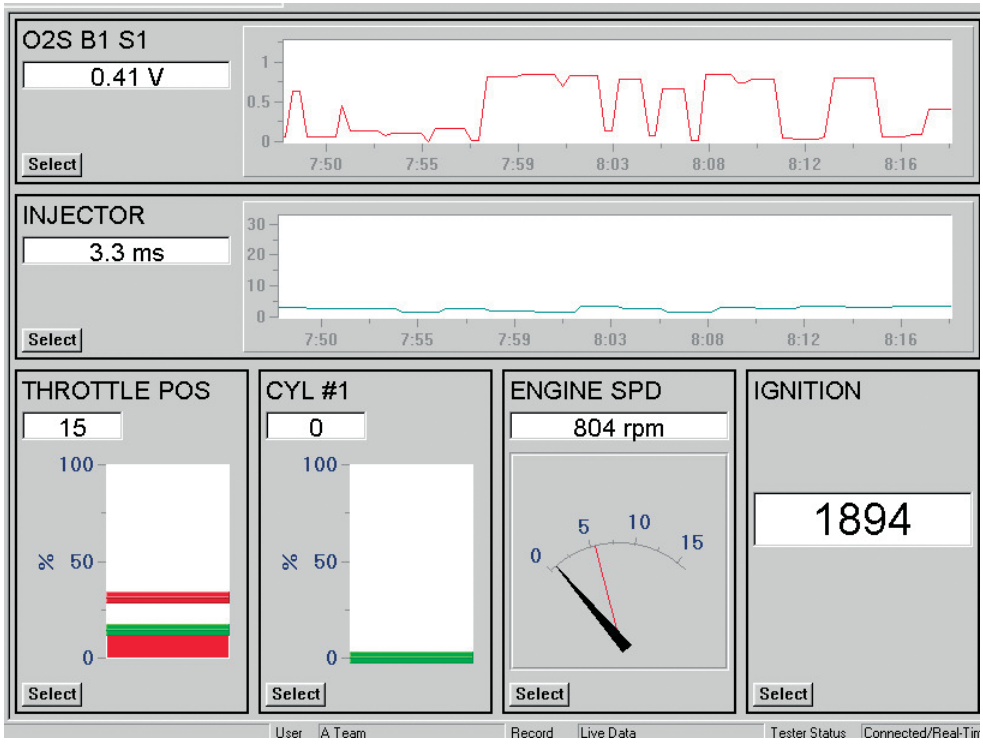

Fig. F-14

TL874fF14

SECTION 3: Record and Retrieve Real-Time Data

9. Record and Retrieve Real-Time Data. Notice the four buttons on the left side of the screen, starting with the green button. This is the Play button, followed by the Pause, the Stop, and then the Trigger button.

Practice Exercise

After clicking on ALL in step 1, set the recording time for 15 seconds. Follow the diagrams below to use the Trigger button to record the data. Increase the rpms to 3000, 3 times in order to see the data change. Recording time can be set up to 10 minutes.

Note: A TechView Record can contain multiple Live Data Lists, Snapshot Data, DTC Information, OBD System Monitors, and Freeze Frame Data.

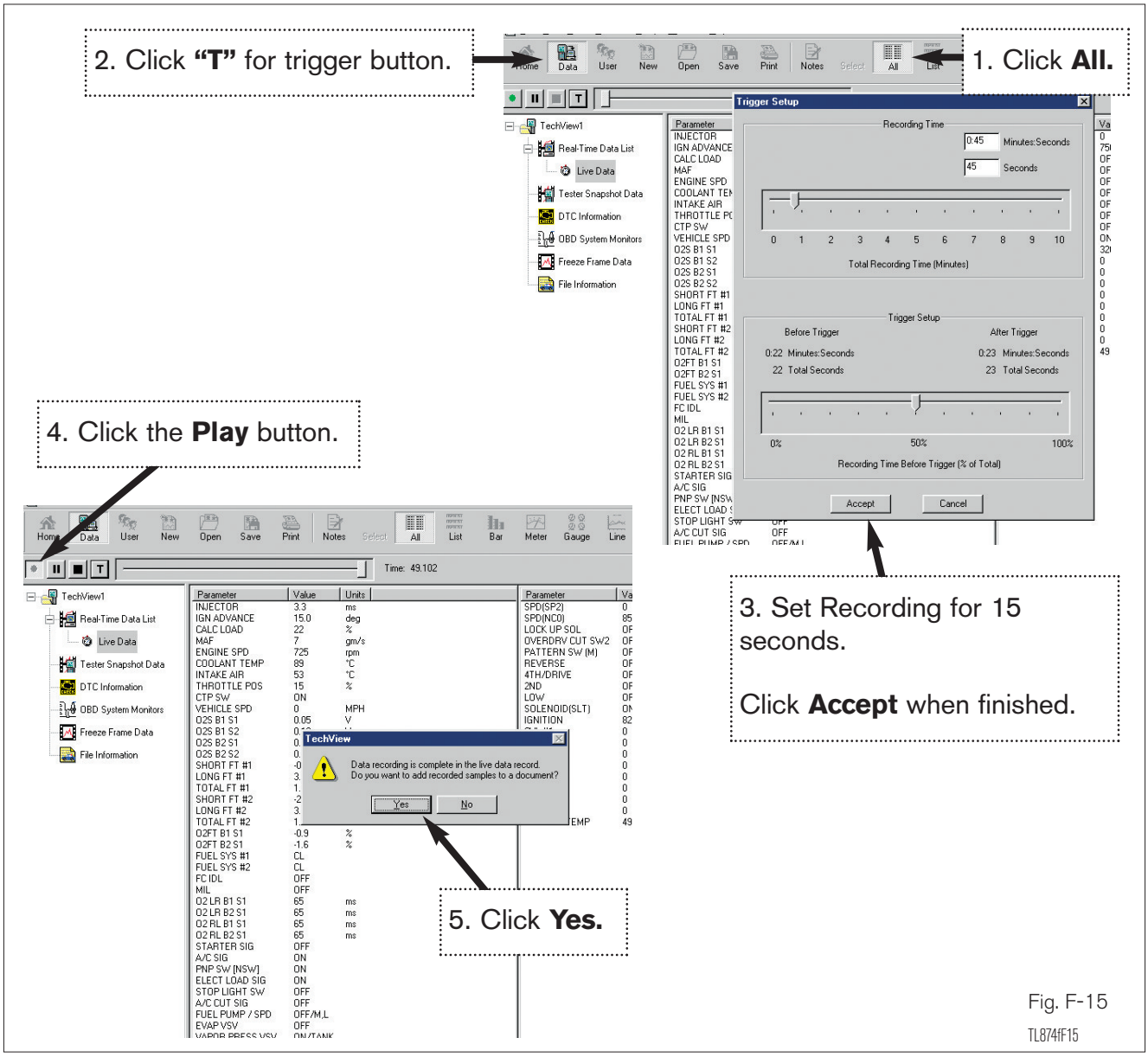

Fig. F-15

TL874fF15

10. Add Real-Time Data Record. The "Add Record" box will appear whenever you want to view data in TechView. Save the Record and name it according to the vehicle and the condition. This naming process is going to be left to your own discretion. Relate the Record name to the purpose of the created data.

Example: Misfire Data

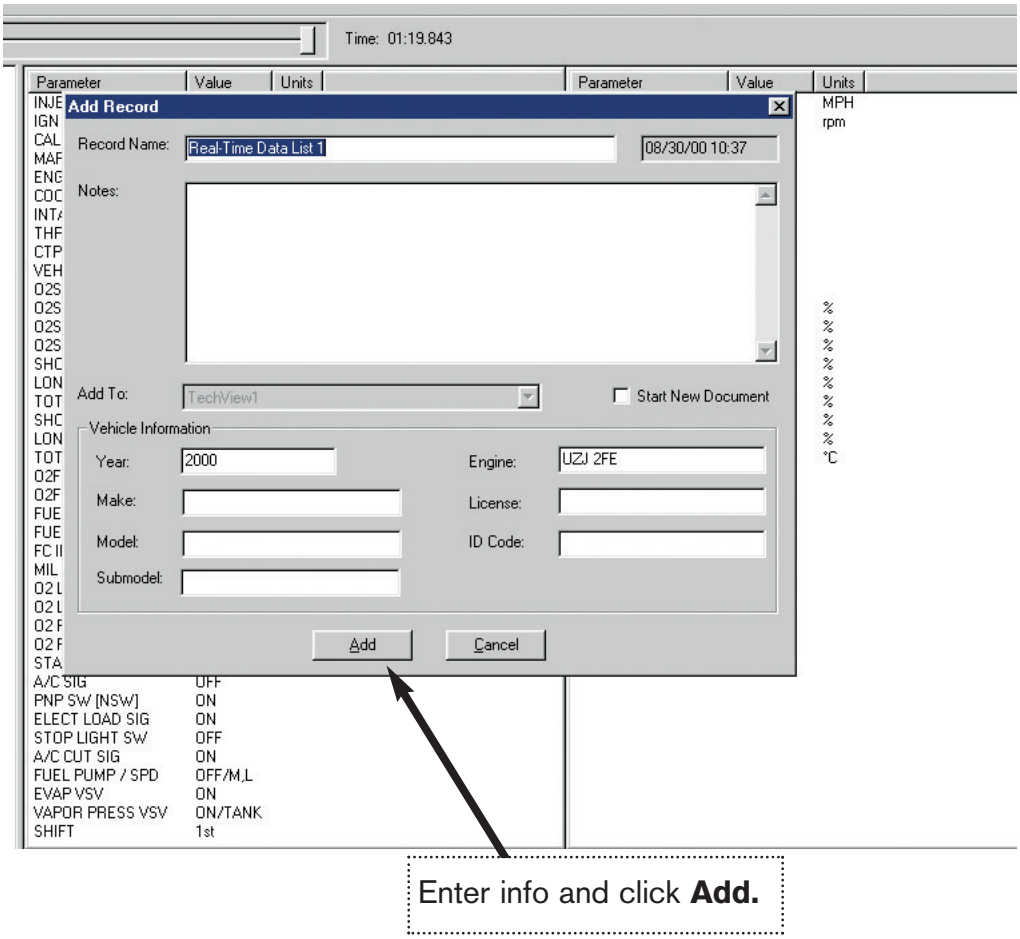

Fig. F-16

TL874fF16

SECTION 4: Take Snapshot Data

11. TechView allows you to take Snapshot Data with the Diagnostic Tool and retrieve it in TechView. There will be times when you will want to record and retrieve a data stream. The following exercise will help you understand this process.

Practice Exercise

With the vehicle running, take Snapshot Data of the Throttle Position, O2 sensor, Engine Speed, and MAF using the Diagnostic Tester. Then view the snapshots using TechView by following the diagram below.

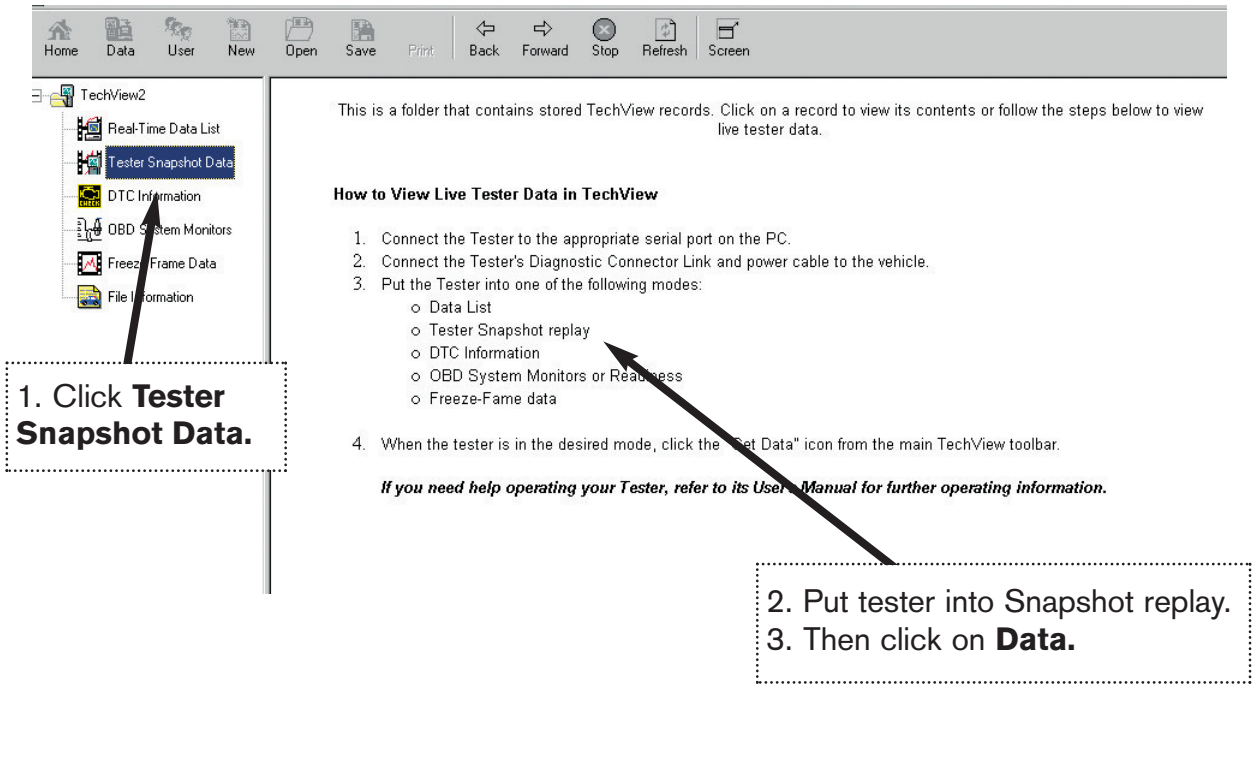

Fig. F-17

TL874fF17

11a. Add Snapshot Record Notes and Vehicle Information.

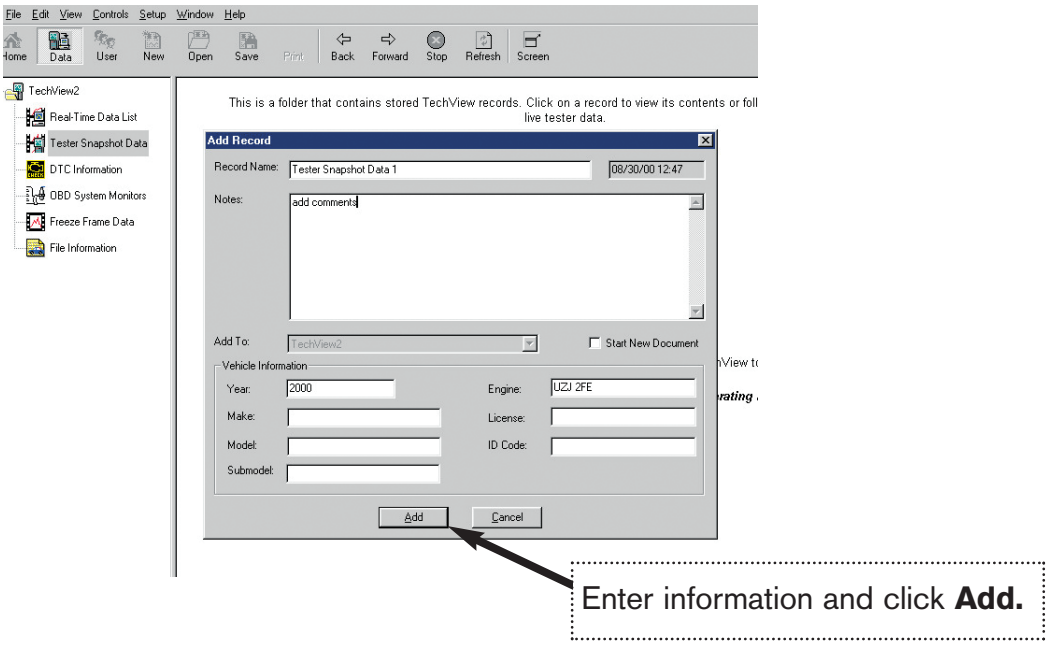

Fig. F-18

TL874fF18

11b. Now you are able to graph and play the snapshot data from the Diagnostic Tester. Simply click on any of the graph features.

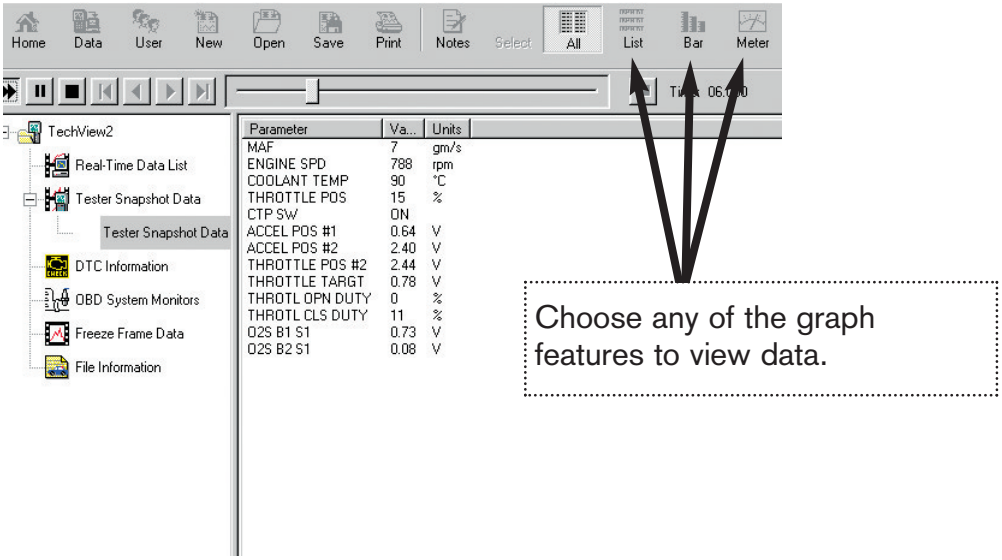

Fig. F-19

TL874fF19

SECTION 5: DTC Information

12. View DTC Information. After storing the vehicle's DTCs on the tester, follow the diagram below.

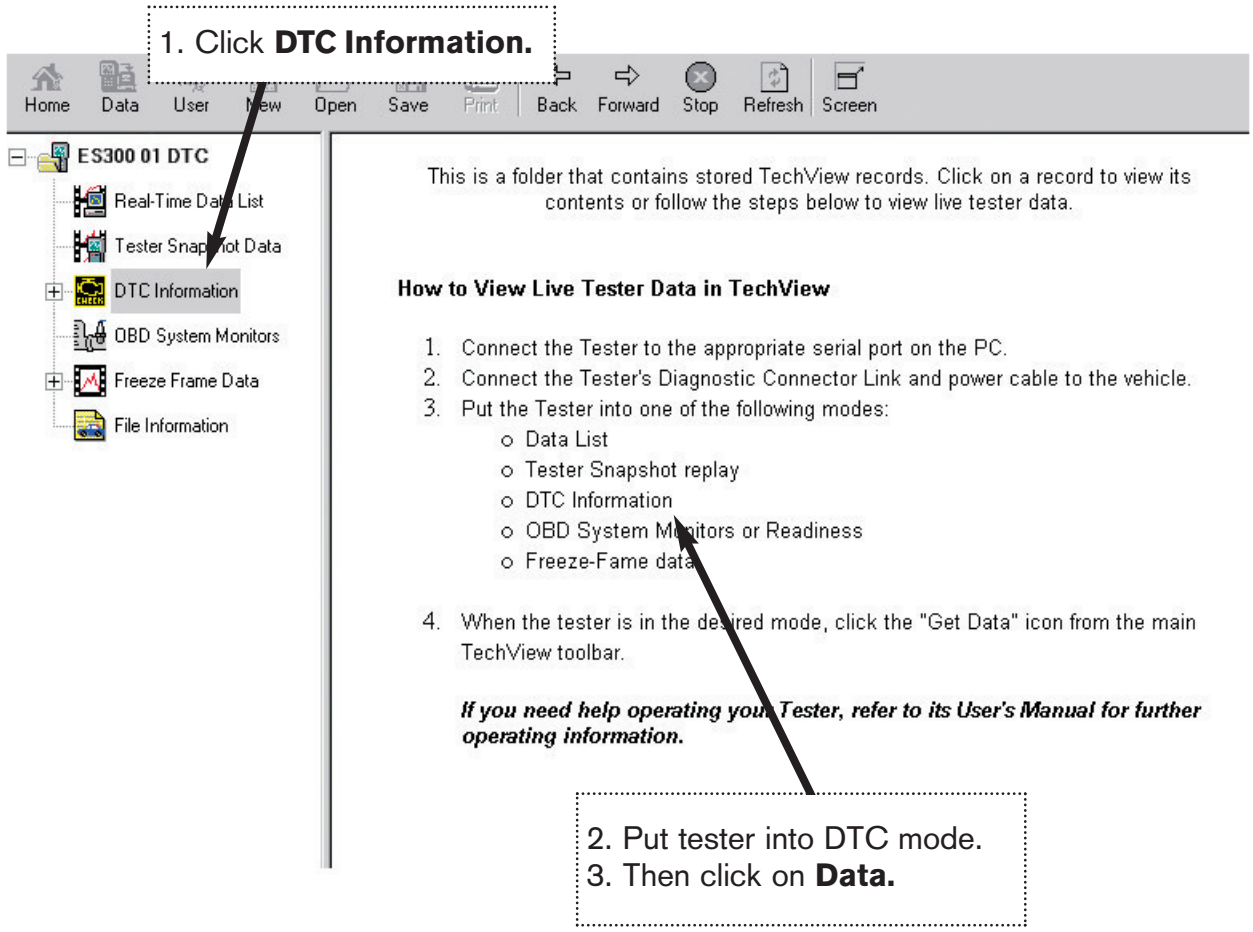

Fig. F-20

L874fF20

12a. Add DTCs to file. Click on the Add button at the top of the screen to save a DTC Record to your file.

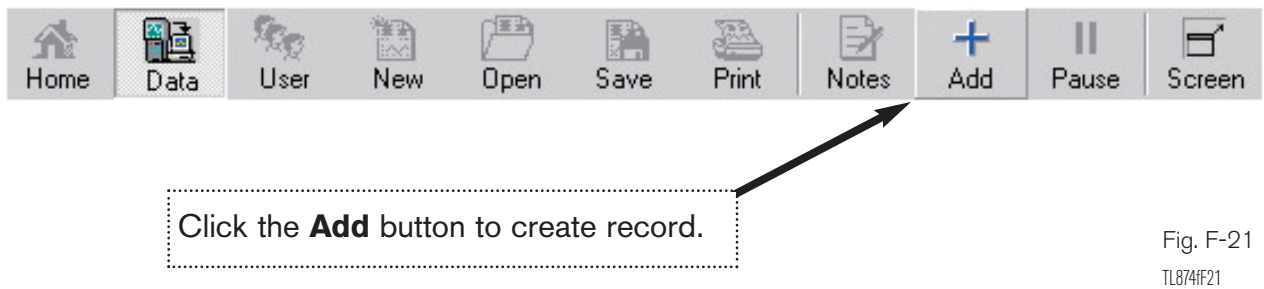

Fig. F-21
TL874fF21

12b. Add DTC Record

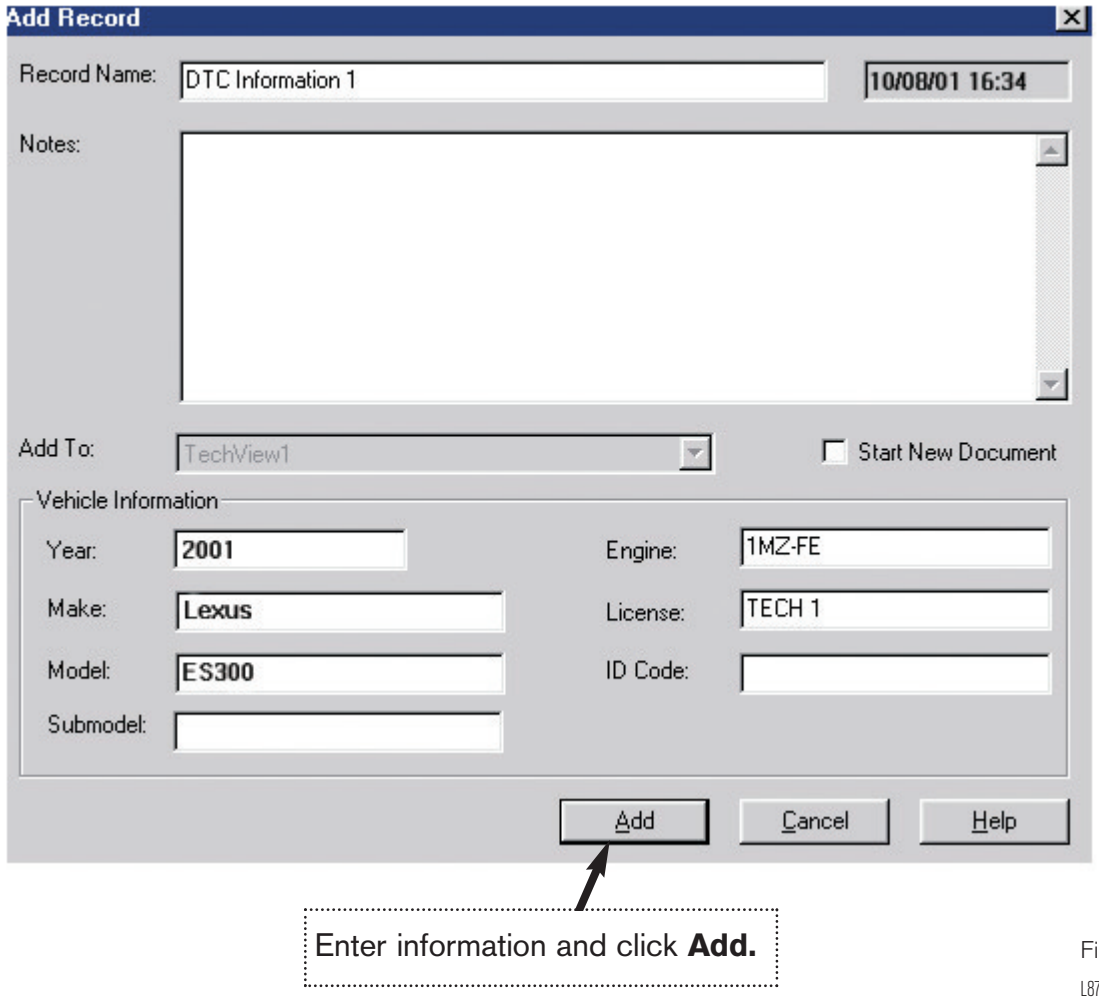

Fig. F-22
L874fF22

Note: To retrieve OBD System Monitors and Freeze Frame Data, follow the same procedure as above. Always put the Diagnostic Tester into the desired mode, then put TechView in that same mode to retrieve data.

12c. DTCs are stored.

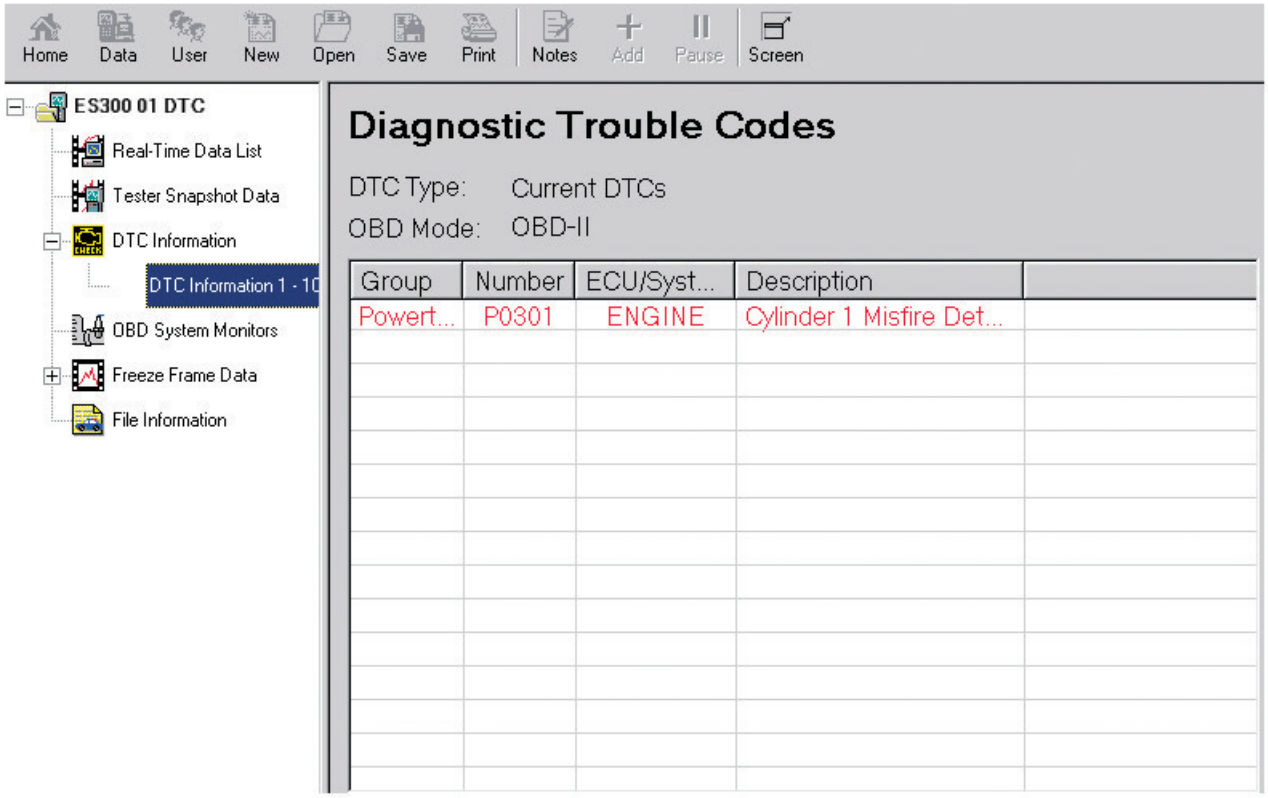

Fig. F-23

L874IF23

SECTION 6: Save File

13. Save information. Save all the information have gathered by clicking the Save button at the top of the screen. Name the file by following the example below:

Example: ES300 01

Always start with the vehicle name (ES300), then the year (01). It is extremely important to always follow this naming system. It will make it much easier to find and sort files in the future because they will automatically be sorted into alphabetical order.

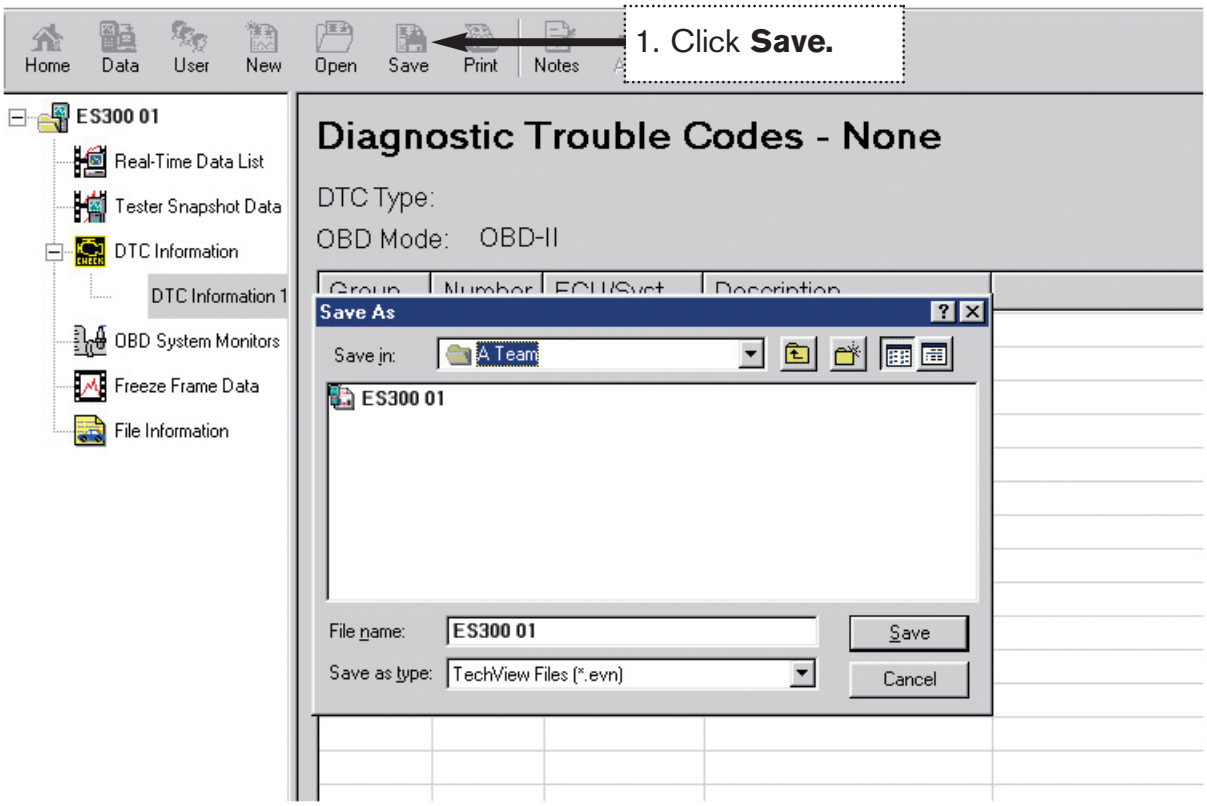

Fig. F-24
L874fF24

13a. Close the window and re-open the file to see that you have saved it.

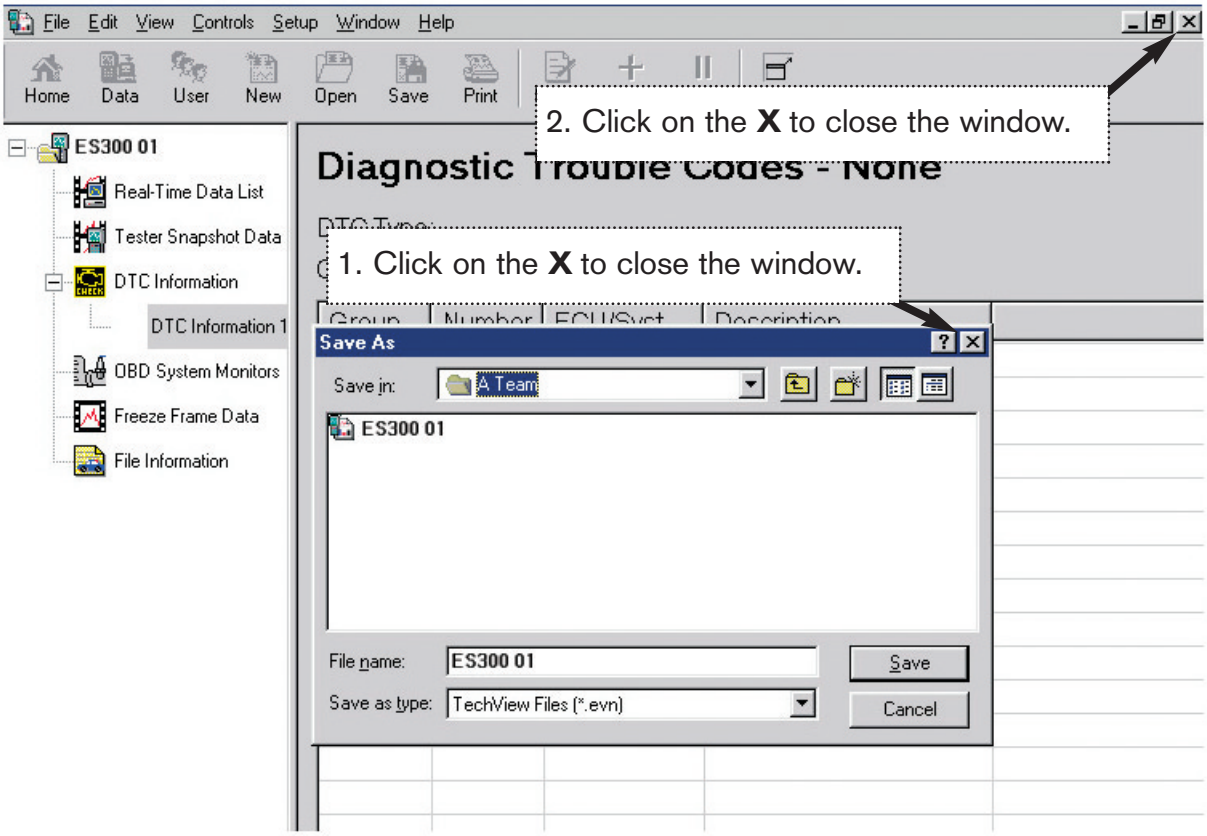

Fig. F-25

L874IF25

13b. Re-open the file by clicking Open and then double clicking on the file name.

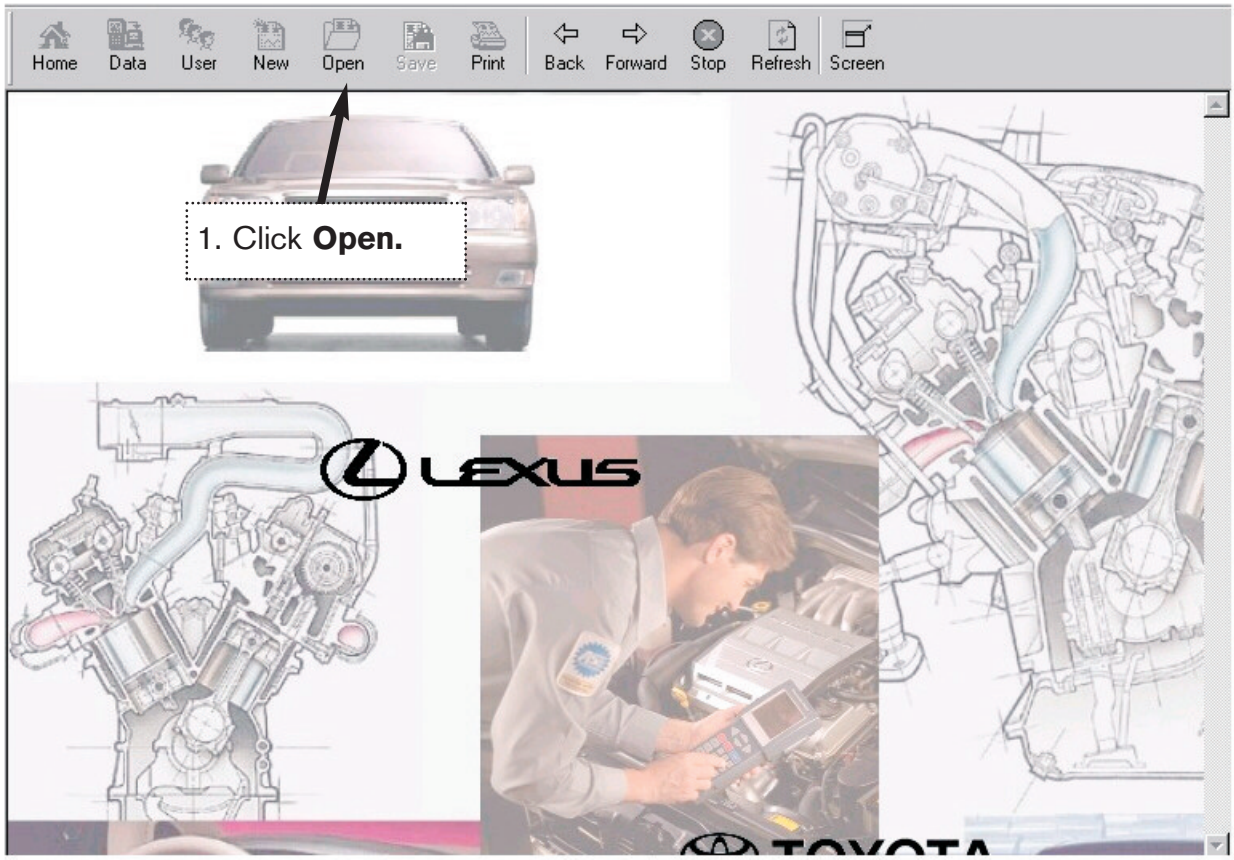

Fig. F-26
TL874fF26

14. Print File. After opening your file, simply click on the Print button to print the file.

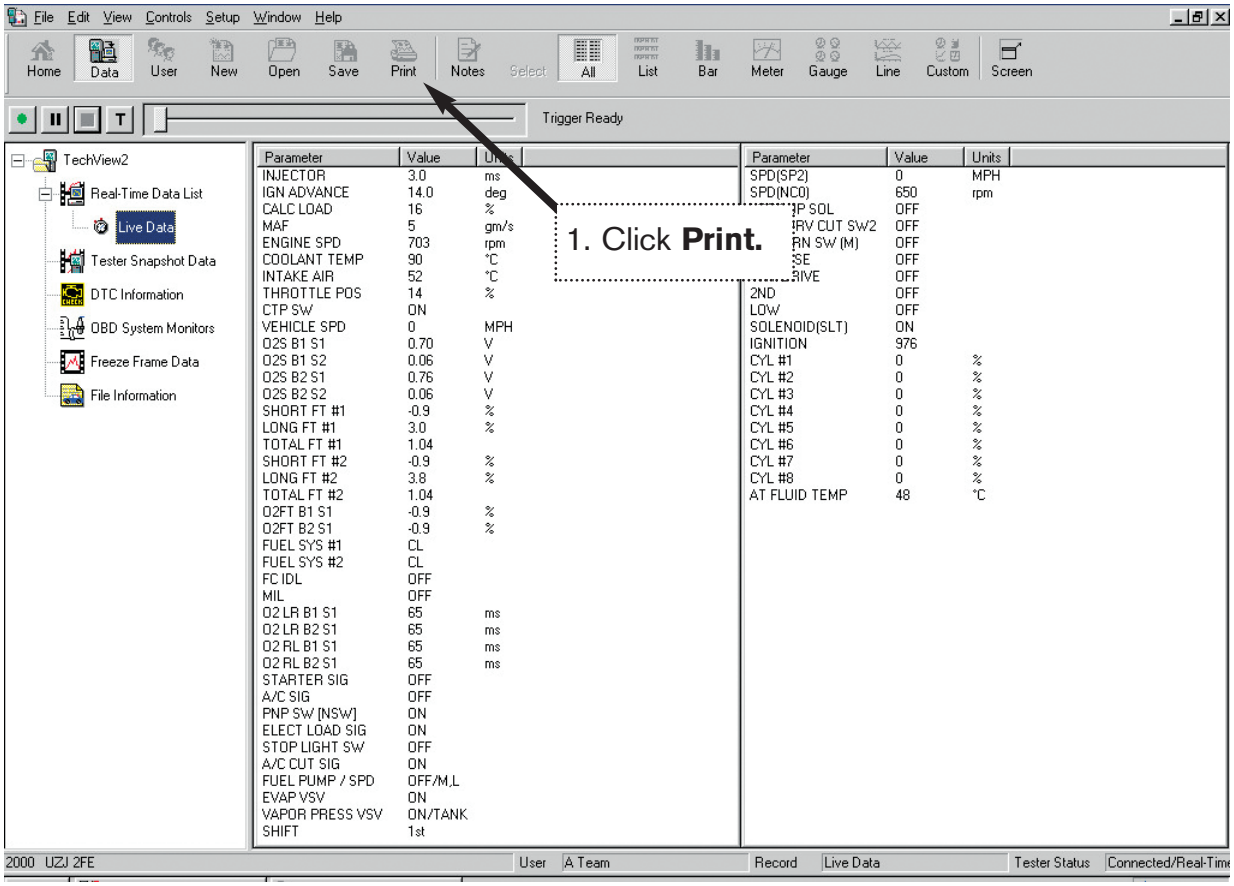

Fig. F-27

TL874fF27

EVAP Canister Component Locations

Late Type EVAP Components

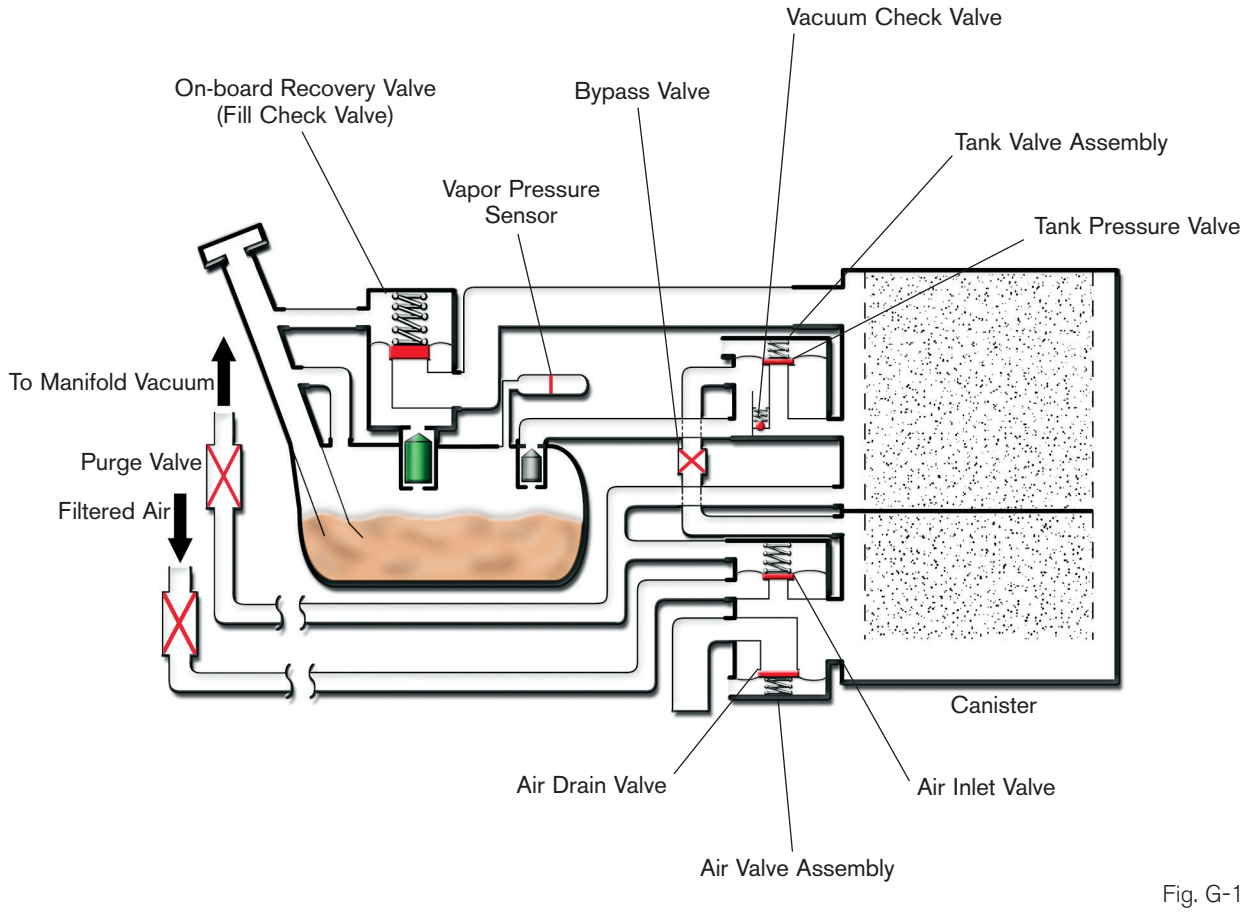

Fig. G-1

TL874fG01

Air Drain Port

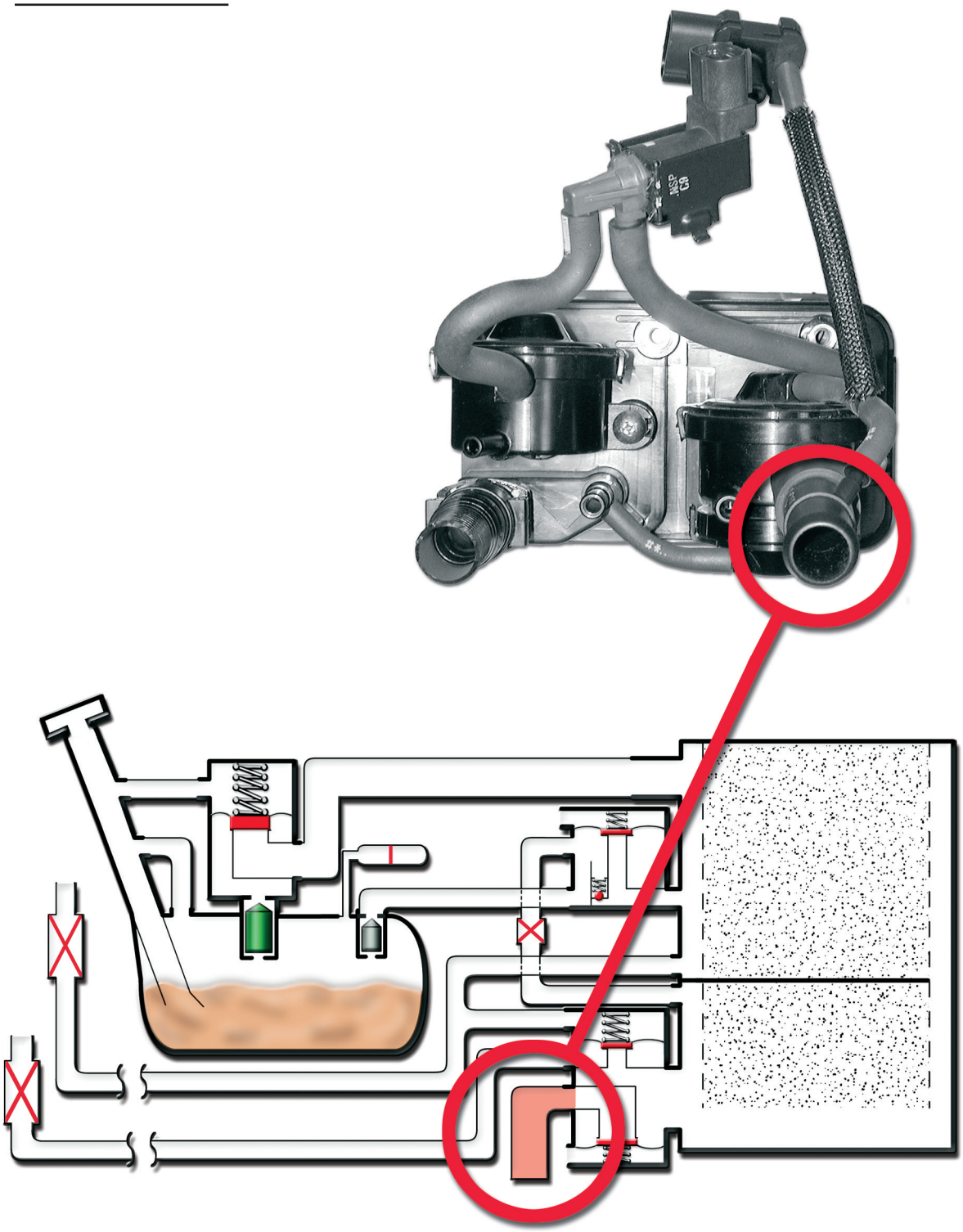

Fig. G-2

TL874fG02

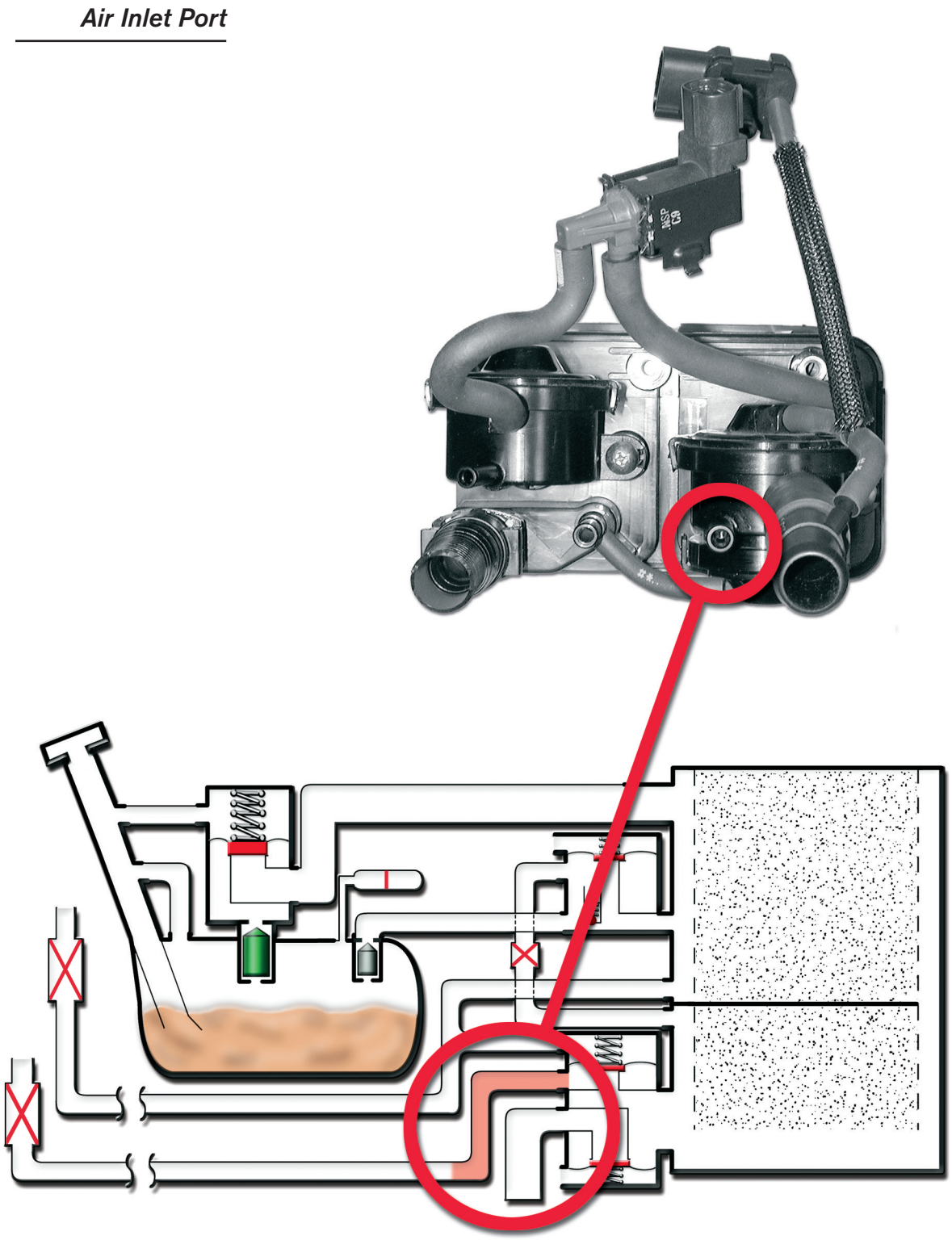

Fig. G-3

TL874fG03

Purge Port

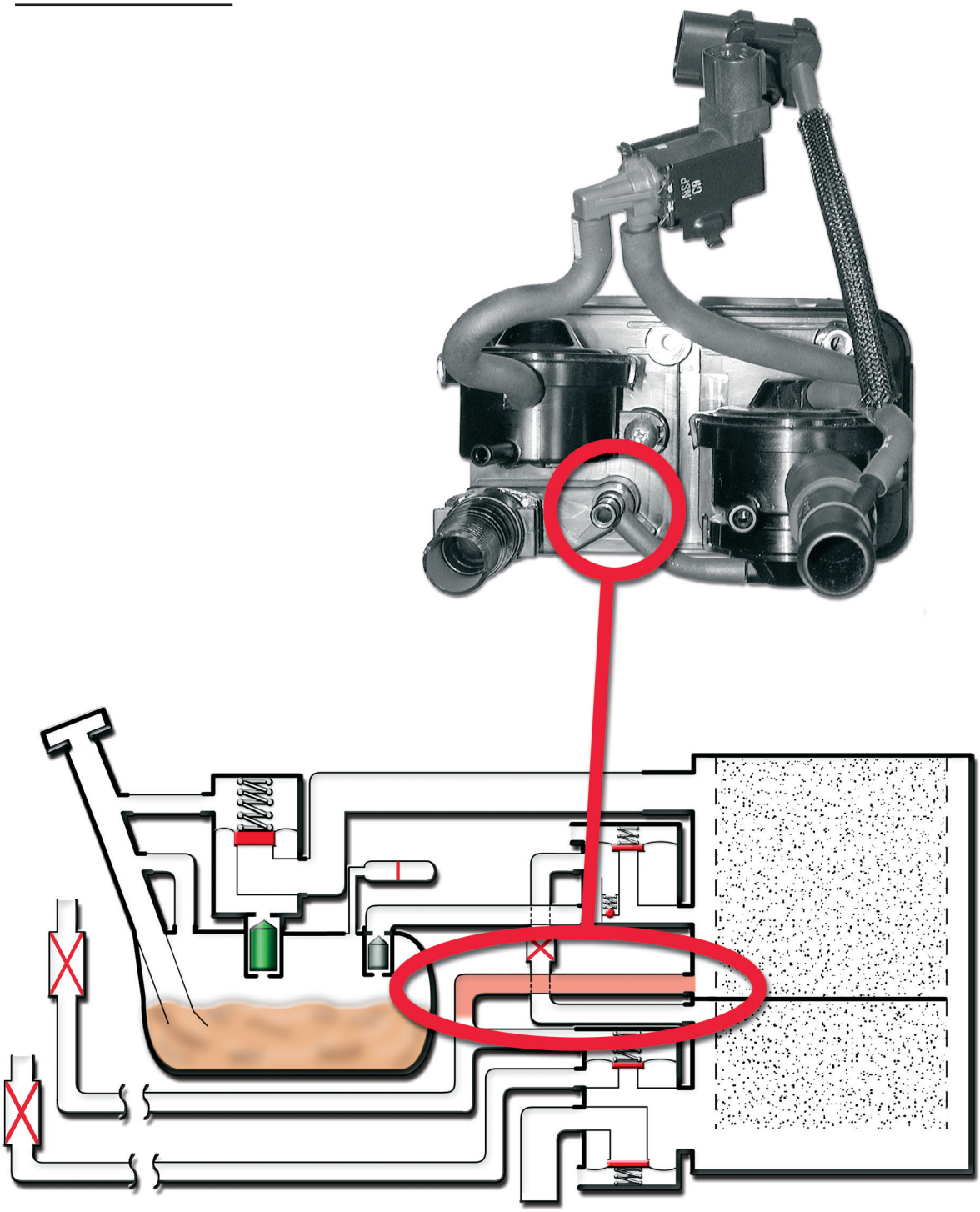

Fig. G-4

TL874fG04

Air Inlet Control Valve Port

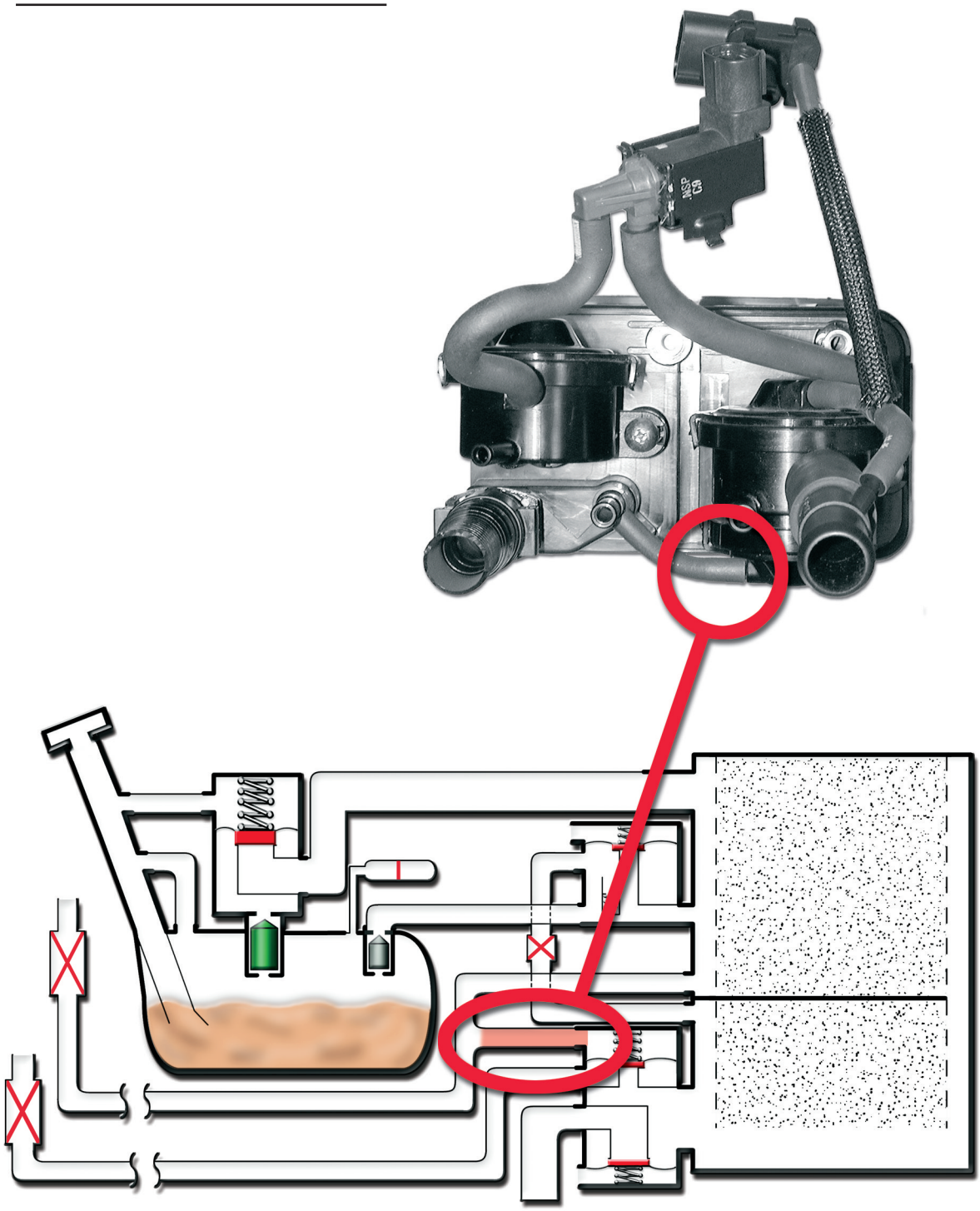

Fig. G-5

TL874fG05

Bypass Valve

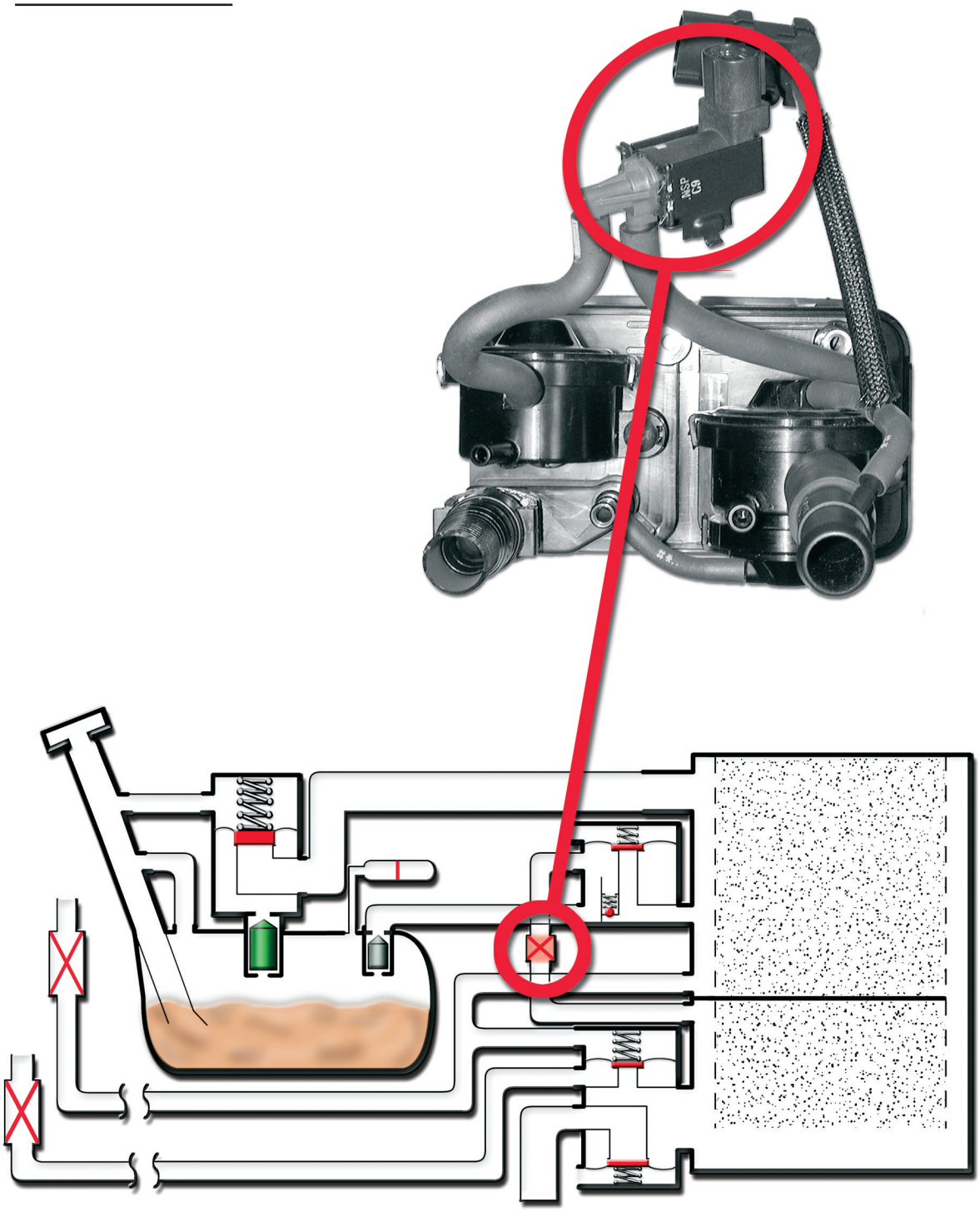

Fig. G-6

TL874fG06

Bypass Valve Ports

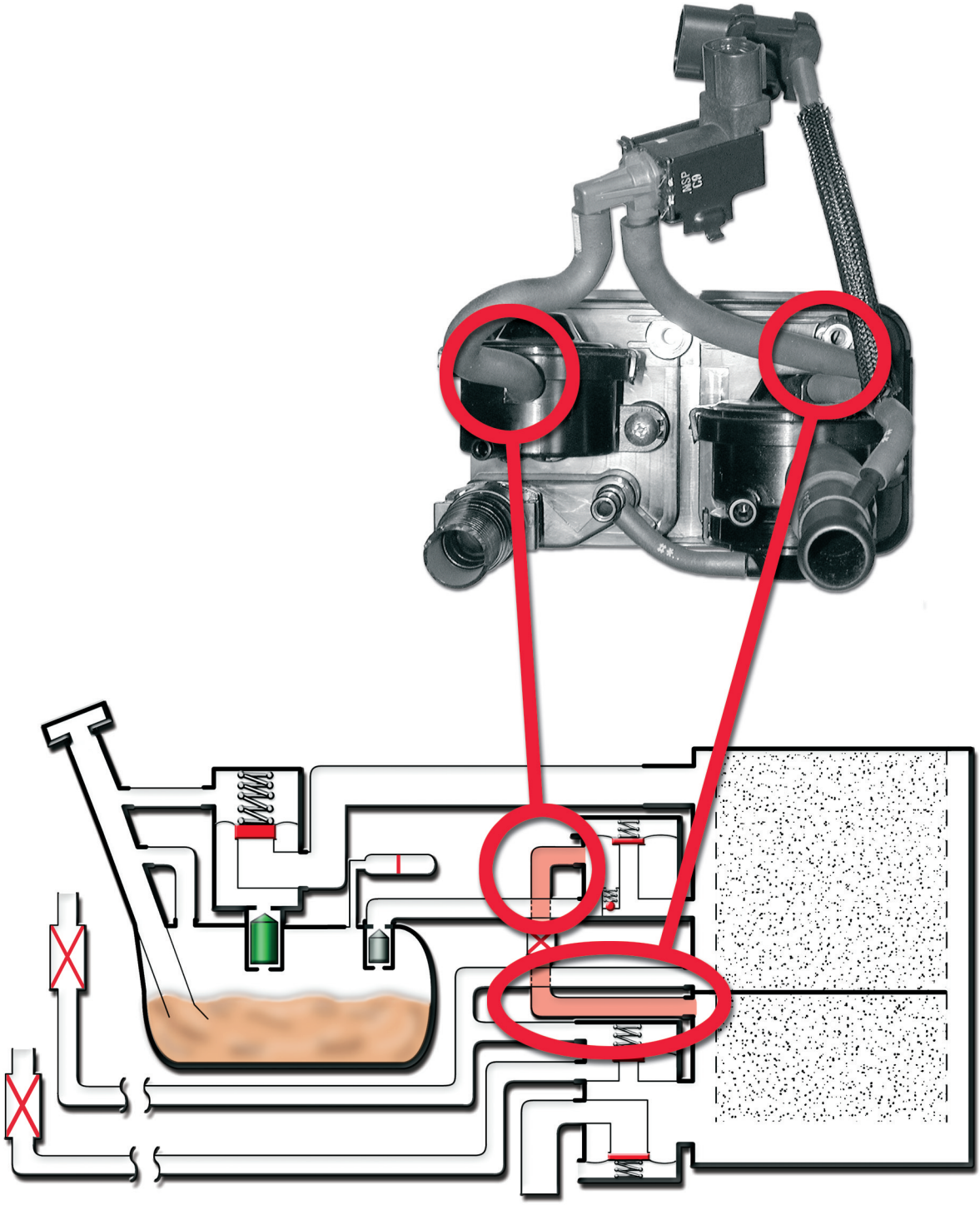

Fig. G-7

TL874fG07

EVAP Port

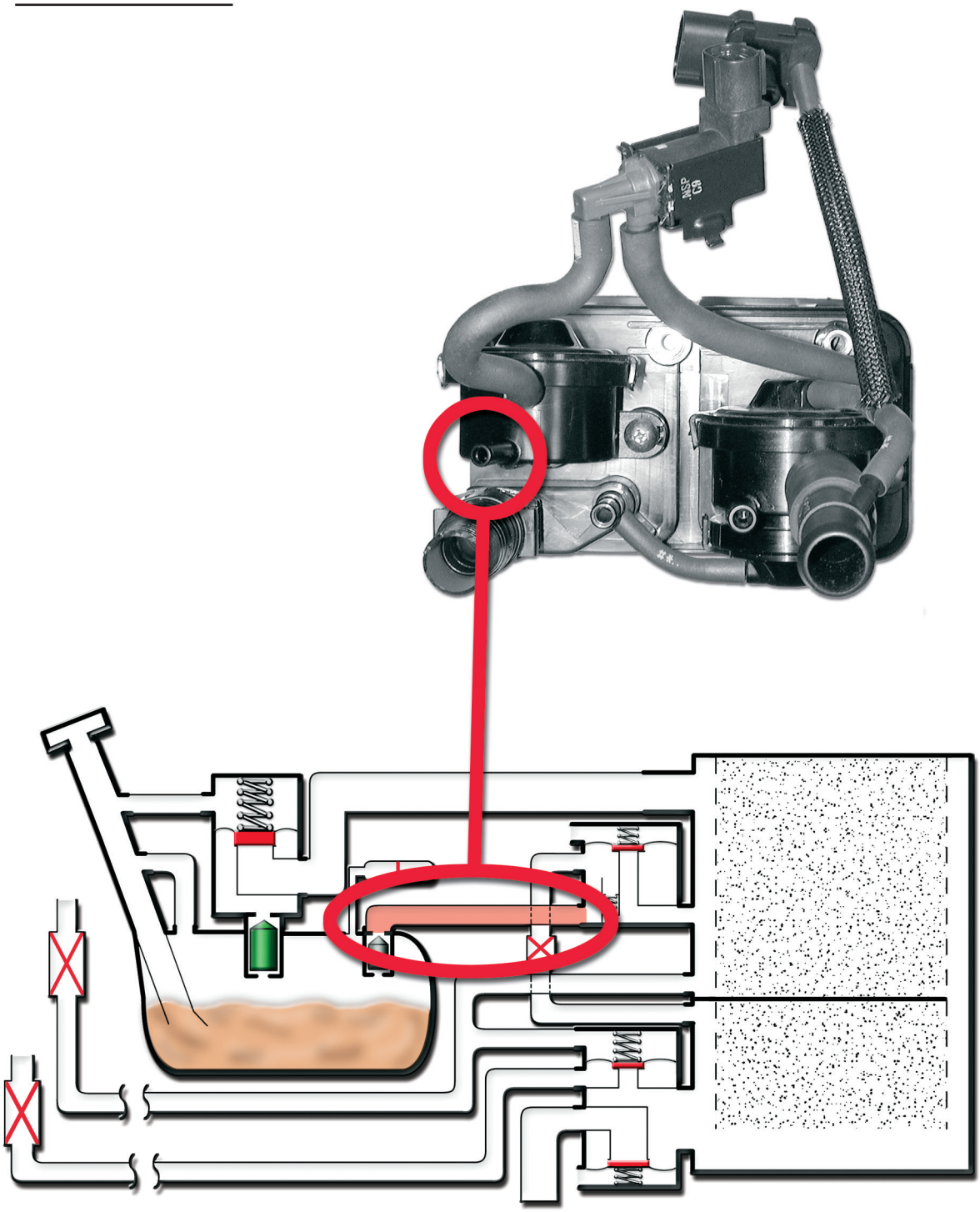

Fig. G-8

TL874fG08

Vent (Fill Check Line) Port

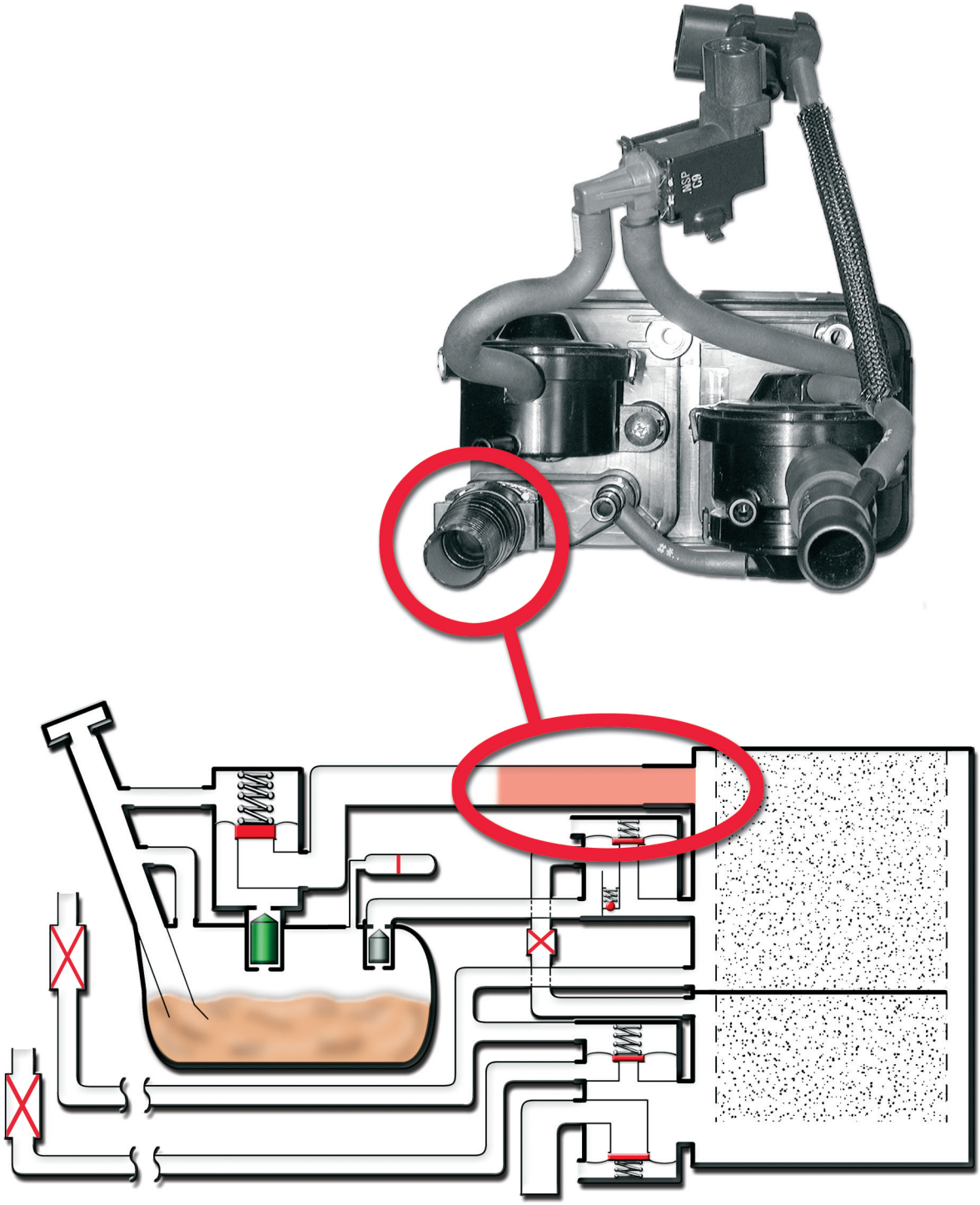

Fig. G-9

TL874fG09

Vapor Pressure Sensor

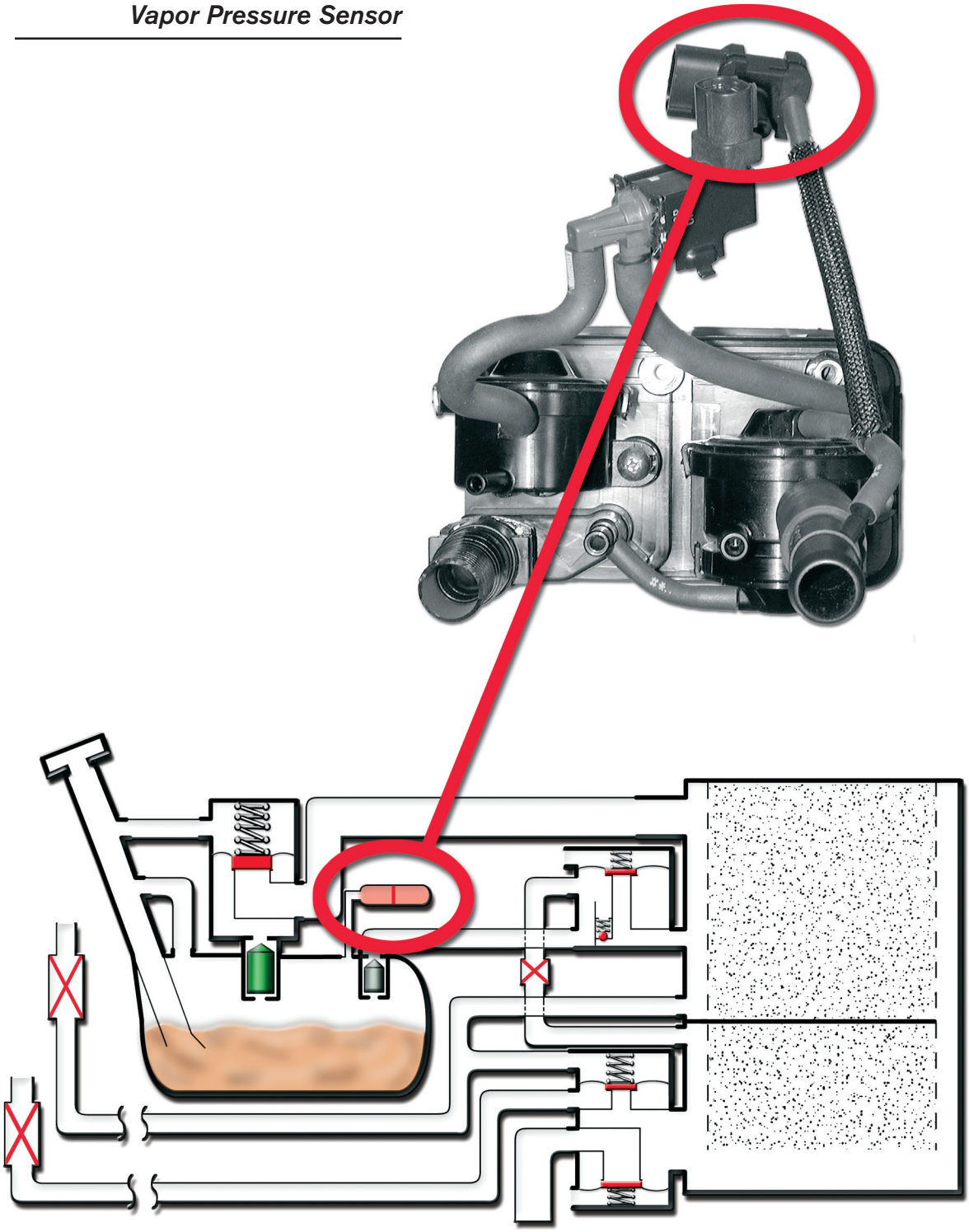

Fig. G-10

TL874fG10

Section 1

FUNDAMENTALS OF NOISE, VIBRATION, AND HARSHNESS

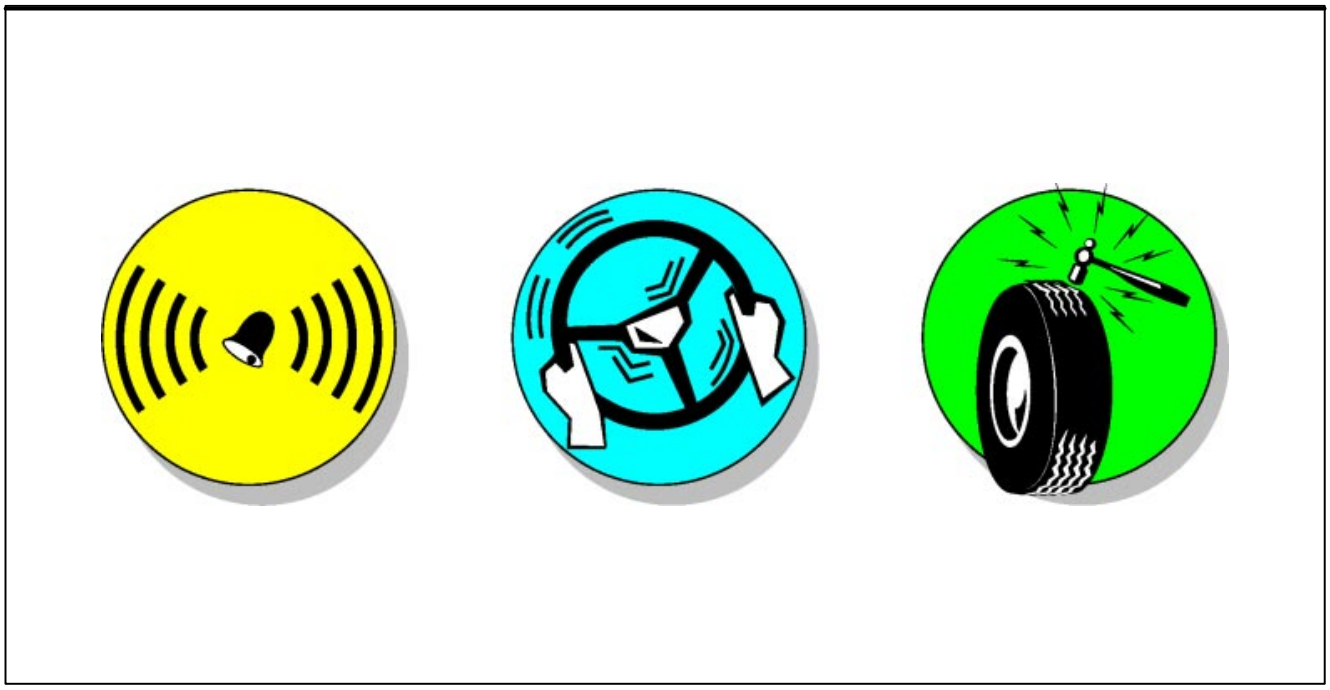

Lesson Objectives

1. Introduce the concepts relating to Noise, Vibration and Harshness (NVH).
2. Define NVH terminology.
3. Develop the background necessary for NVH diagnosis and the use of the NVH Analyzer.
4. Introduce the concepts of the transmission of vibration and sound.
5. Introduce the concepts of preventing excessive vibration and noise.
6. Develop skills in associating NVH symptoms to the:
   - Sensation
   - Frequency range
   - Operating conditions
   - Causes
   - Vibrating system

Introduction

Noise and vibration normally exist in the operation of a vehicle. When they become unpleasant to the senses they may be regarded as concerns by the customer. **NVH (Noise, Vibration and Harshness)** is the term used when discussing these conditions.

Noise, Vibration and Harshness

Fig. 1-1

We **experience vibration by our senses of touch and vision**. We experience **sounds by our sense of hearing**. People can perceive the same noise and vibration differently. To some it may be annoying, to others merely unpleasant while others may not notice it until it is pointed out.

Sensing Vibrations

Fig. 1-2

Introduction
Continued

The NVH condition that is a concern does not have to be the strongest vibration or the loudest noise. It could be one that was not there before or one that is not acceptable to the customer. Therefore it is critical that we **verify the customer's concern.**

For example:

Exhaust system noise from a Sport Coupe could be acceptable. A concern on the same vehicle could be much more subtle, caused by a driveline concern.

Because we sense vibration and sound using different senses, we tend to discuss them separately. But **vibration and sound are essentially identical.**

A sound is a vibration (pressure fluctuation) of the air.

Vibrations and sounds are both expressed as **waves per second** called **Hertz (Hz)**, discussed in detail later.

- Vibrations that are felt are under 200Hz
- Vibrations between 20Hz - 20,000Hz are audible by humans
- Vibrations over 20,000Hz are ultrasonic and not audible by humans

Frequency Ranges of Vibration and Sound

Fig. 1-3

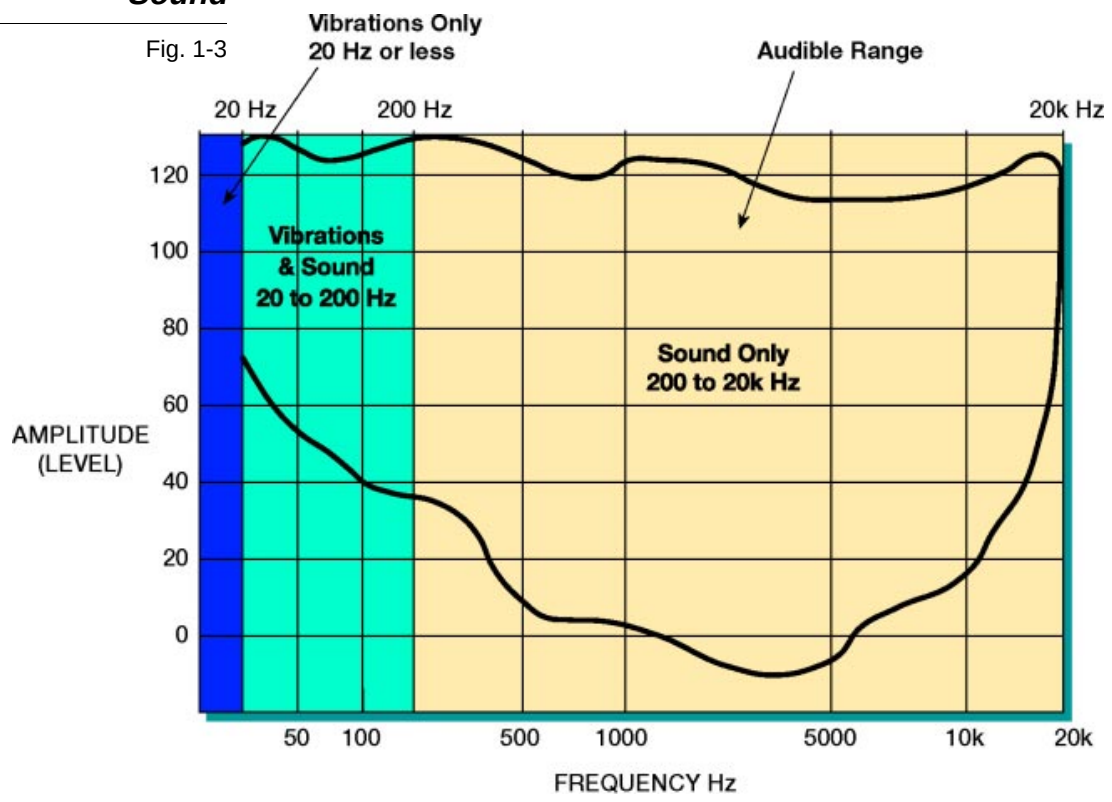

Audible Range

Fig. 1-4

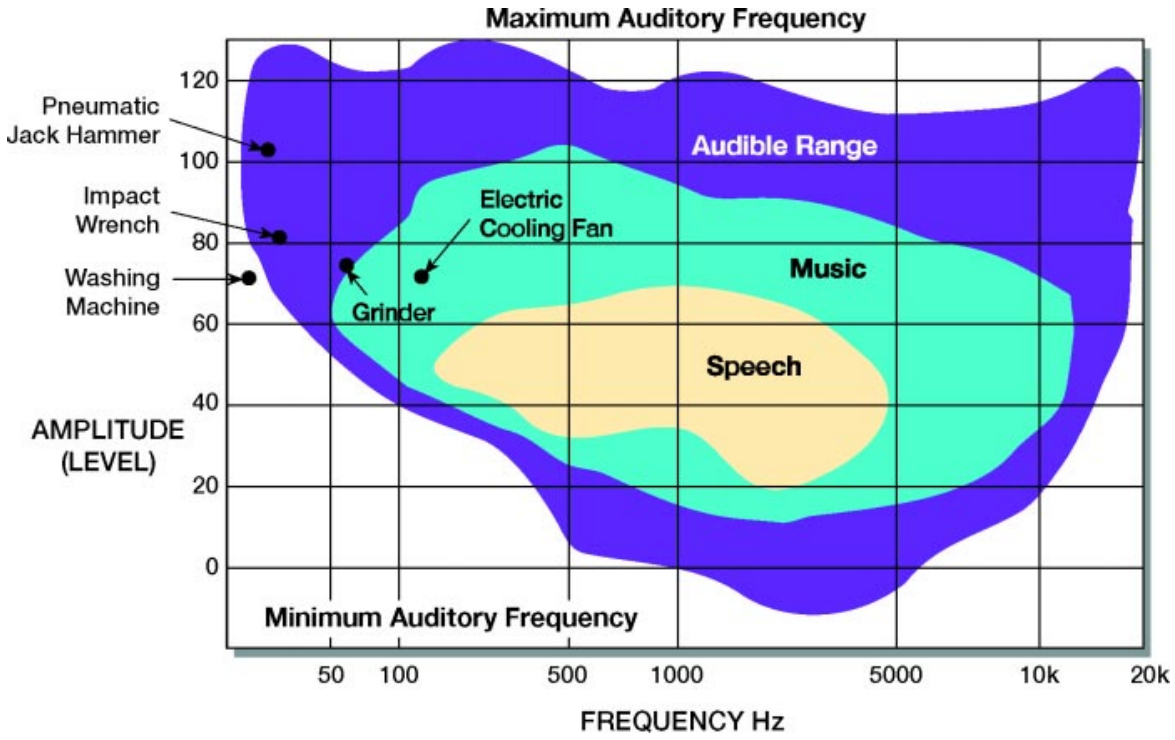

Characteristics of vibration

Introduction

NVH phenomena can be a difficult concept to grasp. It is similar to the concept of electricity, we only experience the results in both cases. We cannot see it as easily as a broken or worn component.

For example:

> The light from a light bulb is not electricity, but the result of electricity. The movement felt by a customer is not the source of the vibration. It occurs as a result of a condition such as an imbalance.
>
> Vibrations, like electricity, have **basic characteristics which are always present**. Understanding these characteristics will allow a technician to predict the source of a vibration.

Vibration

The up and down movement of the weight and spring model shown below represents a vibration. This movement or vibration exists as a result of a weight suspended by a spring and an external force.

The factors that determine movement or vibration are:

- The size of the spring
- The size of the weight
- The amount of force pulling on the weight starting it in motion

The model consisting of the suspended weight and spring is called the **vibrating system**.

Anything that vibrates is a vibrating system including:

- A string on a musical instrument
- A bell
- A tuning fork

The weight and spring model or vibrating system can be started into motion by pulling on the weight. This action is known as the **vibrating** force. A vibrating force is the external force or energy putting a vibrating system into motion.

Plucking a string on a guitar or striking a bell or tuning fork are the vibrating forces that cause these vibrating systems to vibrate and make noise.

Vibration

Fig. 1-5

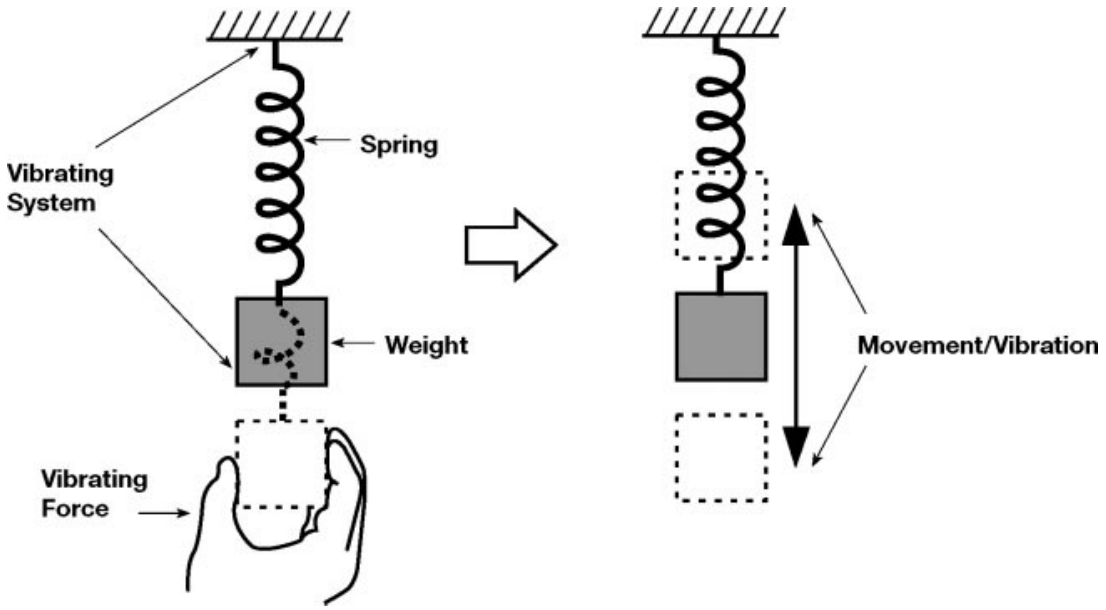

Vibration
Continued

For example:

A vibrating system in a vehicle is the suspension.

- The spring on the vehicle is similar to the spring on the model.
- The weight of the vehicle is similar to the weight on the model.
- Bumps in the road are the external or vibrating forces that start the vehicle into motion.

If you remove the shock absorbers a vehicle will move or vibrate in a similar manner to the weight and spring model.

A technician can bounce a corner of a vehicle and watch the motion to check for bad shocks. If the shocks are good they will **dampen** the motion quickly.

Vehicle Movement without Shocks

Fig. 1-6

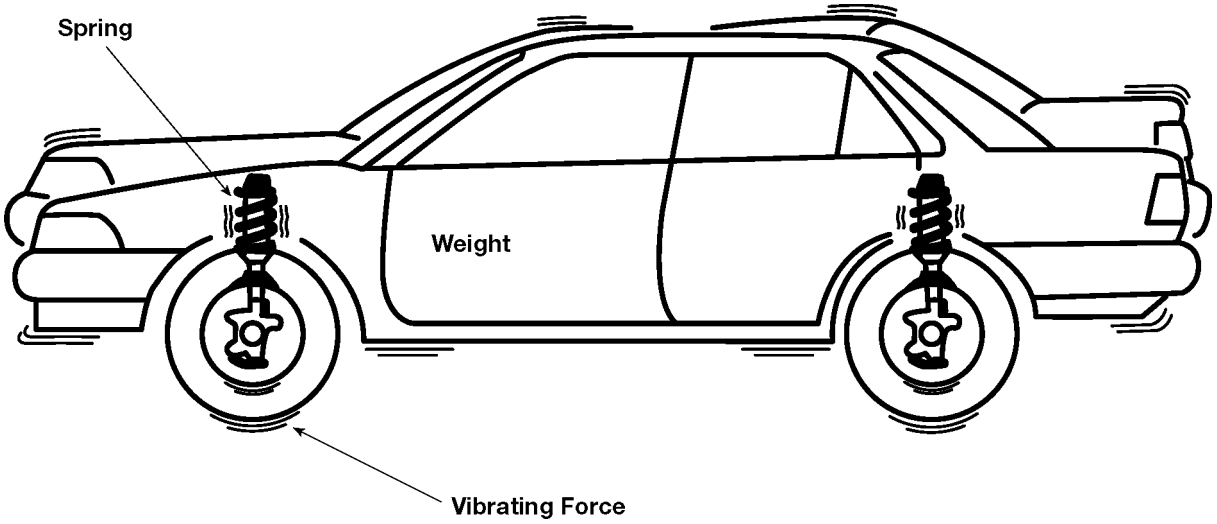

Oscillation is another term used to describe the movement of a vibration. When something oscillates it moves back and forth around a common point.

Cycle If a constant vibration or movement in any vibrating system is plotted over time a pattern appears. This pattern consists of the repetitive movement of the weight.

Tracing this pattern from the resting position through each extreme and back to the resting position will produce **one cycle**.

Cycle

Fig. 1-7

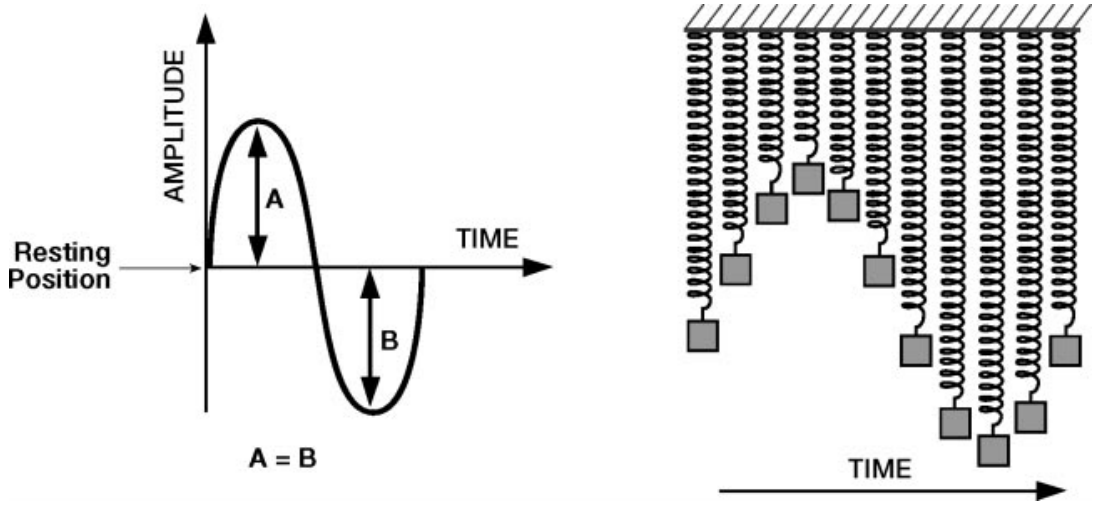

Cycle comes from the word circle. The travel of the weight on either side of the resting position, is half of a circle.

The distance the weight travels from either side of the **resting position** will be the same as long as the vibrating force remains constant.

A = B

Cycle
Continued

The movement/vibration will continue until the energy in the system is dissipated and the system is at rest.

Dissipation of Energy from a Single Impact

Fig. 1-8

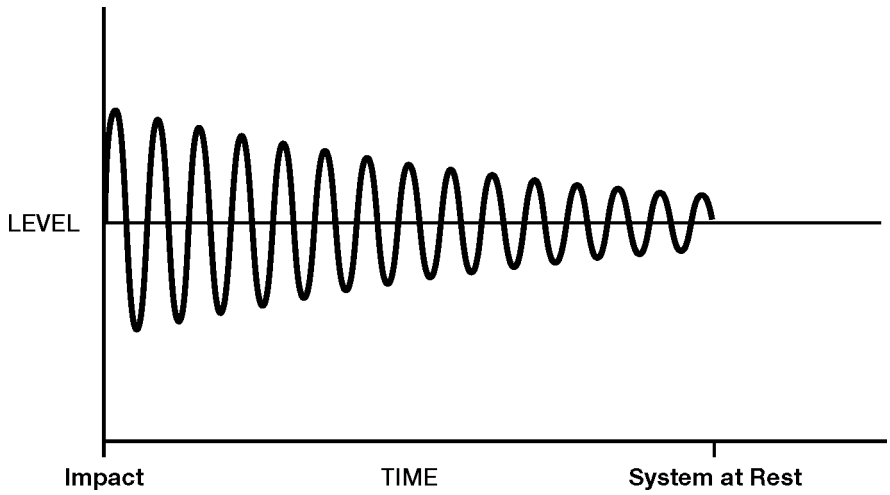

For example:

Another example of frequency or cycle is rotating a crankshaft 360° starting at TDC. This movement is **one revolution**. We measure the speed of an engine by counting these **revolutions in one minute (RPM).**

Rotating the crankshaft from TDC through 360° and back to TDC is also one cycle of the crankshaft. As defined above the crankshaft starts at a specific point, travels in a circle and returns to the same point.

Plotting the movement of a crankshaft over time will result in a similar pattern to the movement of the spring and weight model. (Fig. 1-7)

Frequency

The number of **cycles in one second is the frequency** of the vibration.

The unit for frequency is **Hertz (Hz)**.

Frequency

Fig. 1-9

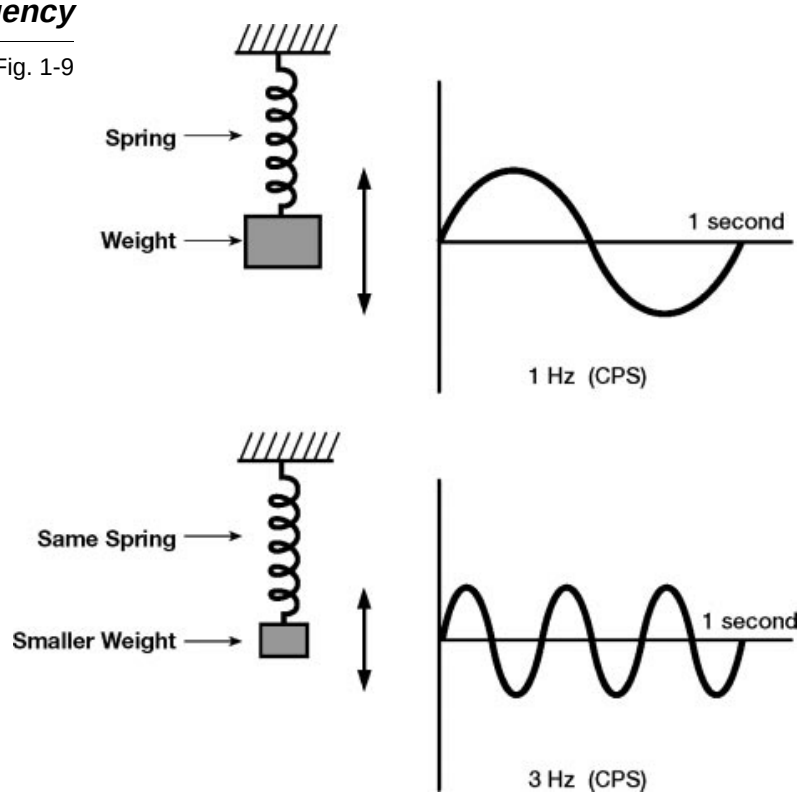

The number of cycles in a second or the frequency (Hz) can be changed by changing the vibrating system. If the strength of the spring is changed or the size of the weight is changed the frequency will change. (All other aspects of the vibrating system unchanged)

- A stronger spring will increase the frequency (Hz)
  - More tension will move the weight at a faster speed
- A weaker spring will decrease the frequency (Hz)
  - Less tension will move the weight at a slower speed
- A heavier weight will decrease the frequency (Hz)
  - More weight will increase the resistance on the spring and it will move at a slower speed
- A lighter weight will increase the frequency (Hz)
  - Less weight will decrease the resistance on the spring and it will move at a faster speed

Vibration Characteristics

Fig. 1-10

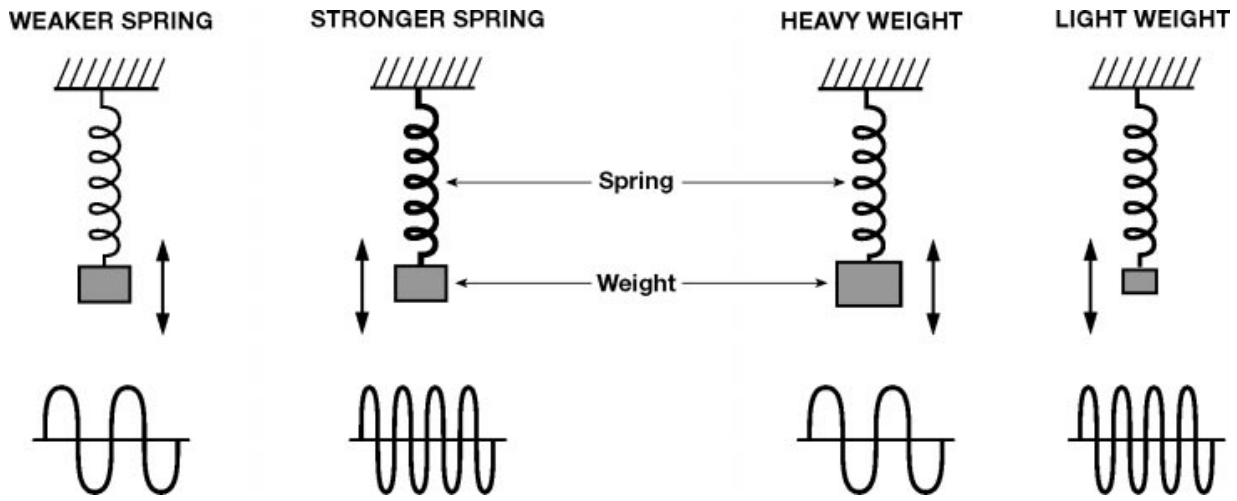

Sensors Signal

Fig. 1-11

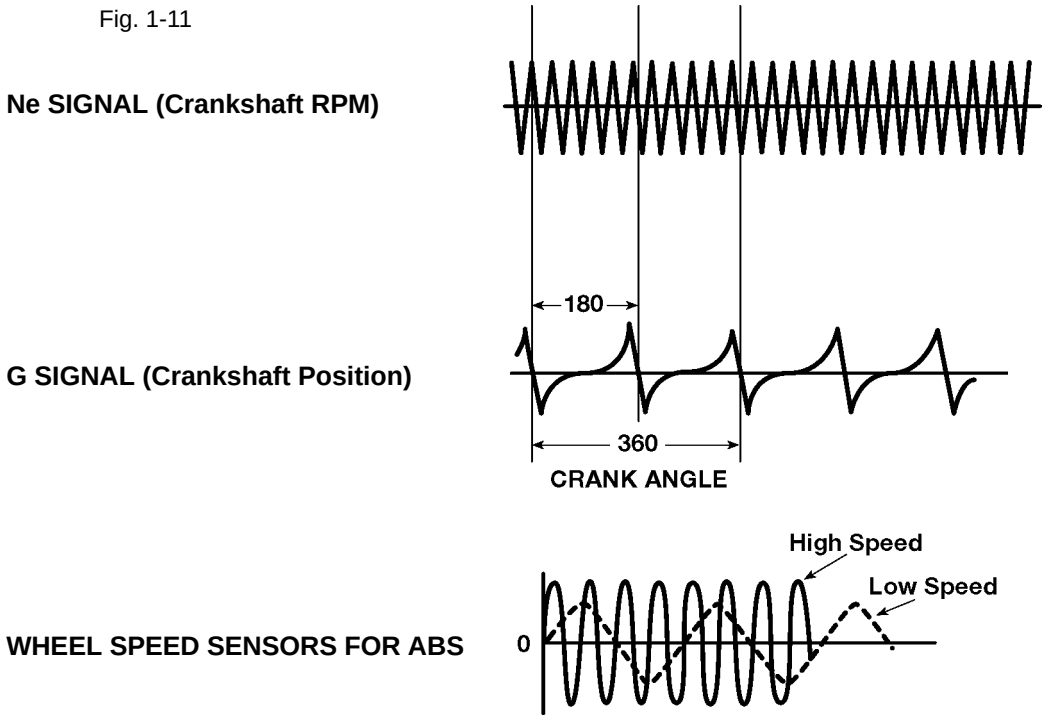

Calculating Component Frequency

Frequency can also be expressed in **Revolutions Per Minute (RPM)**. **RPM** is a common unit for rotating components in the automotive field. RPM can be converted to **Cycles Per Second (CPS) or Hertz (Hz)** by dividing RPM by 60. There are 60 seconds in one minute.

RPM ÷ 60 sec = CPS or Hz

If a crankshaft is rotating at 3000 RPM then it has a frequency (Hz) of 50 CPS or 50 Hz.

3000 RPM ÷ 60 sec = 50 Hz

This formula can also assist the technician in identifying the source of a vibration in a vehicle. If the frequency is known then the RPM can be calculated.

Hz x 60 sec = RPM

A technician can now determine what component is turning at a calculated RPM, during the vehicle conditions at which the concern occurs.

For example:

- Engine RPM can be read from a tachometer **3000 RPM**
- Driveline RPM is the same as engine RPM in fourth gear with a 1:1 gear ratio. (Manual Transmission)

  Engine @ **3000 RPM ÷ 1 = 3000 RPM** drivetrain speed

- 3000 RPM = 50 Hz (engine speed and driveshaft speed).

If the gear ratio is other than 1:1, the engine RPM divided by the ratio equals the driveline RPM.

Engine @ **3000 RPM ÷ 0.783 = 3831.42 RPM** driveshaft speed

- 3831.42 RPM = 63.85 Hz (driveline speed)
- Wheel RPM is calculated by dividing the RPM of the driveline by the gear ratio of the differential.

  Driveline @ **3831.42 RPM ÷ 4.272 = 896.87 RPM** wheel speed

- 896.87 RPM = 14.95 Hz (wheel speed)

The frequency (Hz) of the vibration or sound can be determined with the use of test equipment. A **vibration analyzer** is able to display the vibrations in a vehicle. An abnormal vibration can be associated with a specific frequency from the display.

For example:

The engine could be determined as the source of a measured 50 Hz vibration with the crankshaft turning at 3000 RPM.

50 Hz x 60 sec = 3000 RPM

Amplitude

The amount of **vertical movement** of the spring and weight (vibrating system) is the **amplitude of the vibration**. The amplitude is determined by the **external force or energy** applied to the vibrating system.

Amplitude is the **size of the wave** and is measured two ways.

- Total amplitude from peak to peak (A)
- Half amplitude from resting position to the peak (B)

The higher the amplitude, the more noticeable the condition.

Amplitude

Fig. 1-12

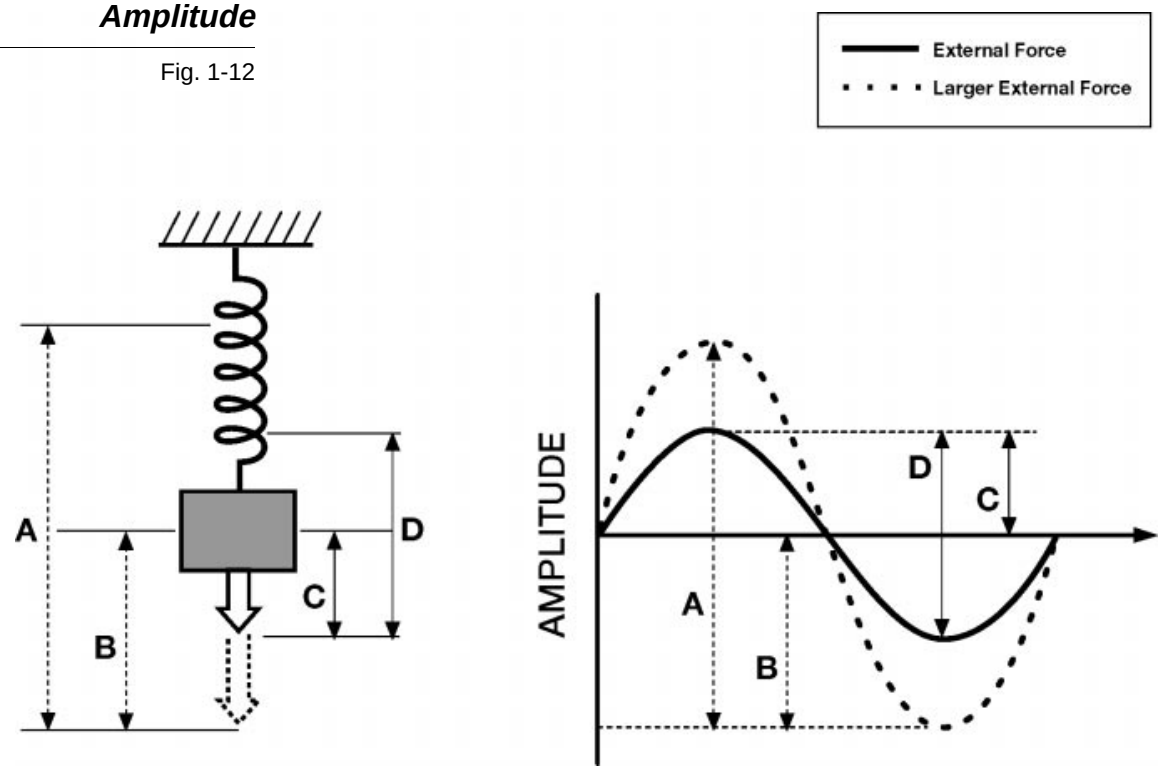

Vibration Measurement

A vibration is measured in two ways:

- Frequency (Hz)
- Amplitude (dBg)

Frequency is a function of the system design and amplitude is the result of the energy on the system.

Both of these features can be measured with a **vibration analyzer** which senses, processes and displays the vibrations in a vehicle. The information from a vibration analyzer can help the technician determine the:

- Frequency of vibration (Hz) - which can indicate the source
- Amount of energy/amplitude(dBg) - which indicates the level of the vibration the customer feels

The vibration analyzer recommended by Lexus is a feature of the **Lexus Diagnostic Tool Set**. The NVH portion of the tool includes:

- An **accelerometer** to sense the vibration
- A **data link** to input RPM and MPH
- A **program card** specific to the NVH function

NVH Analyzer

Fig. 1-13

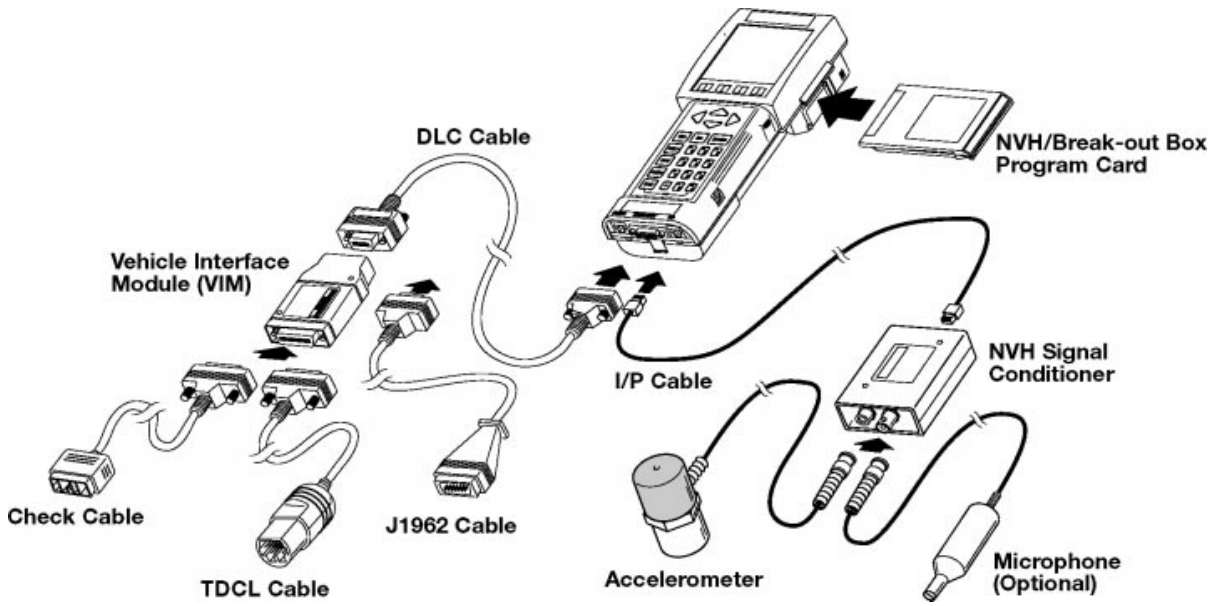

The tool will display the vibrations occurring in a vehicle and aid the technician in diagnosing an NVH concern.

The unit of measurement used by the NVH Analyzer for:

- **Sound level** is the **dB (decibel)**
- **Vibration level (amplitude) is dBg** (g force related to gravity)

The dB is the unit of measurement related to the level or intensity of what we hear. It is a mathematical calculation (logarithm) of a vibrating force that produces a sound. It is useful to associate the level or amplitude of the vibration to the **level sensed by the customer.**

The dBg is the unit that is related to the level or intensity of what we feel. When measuring the level or amplitude of a vibration without sound the unit **g** is added to associate the force of the vibration to gravity. This is similar to measuring the weight of an object which is also a function of gravity.

Level or amplitude becomes important in determining the success of the repairs performed. If the amplitude of a vibration or sound is measured before and after a repair then a comparison can be made. The results are much more objective than using the senses of touch and hearing.

dB (DECIBEL)

Fig. 1-14

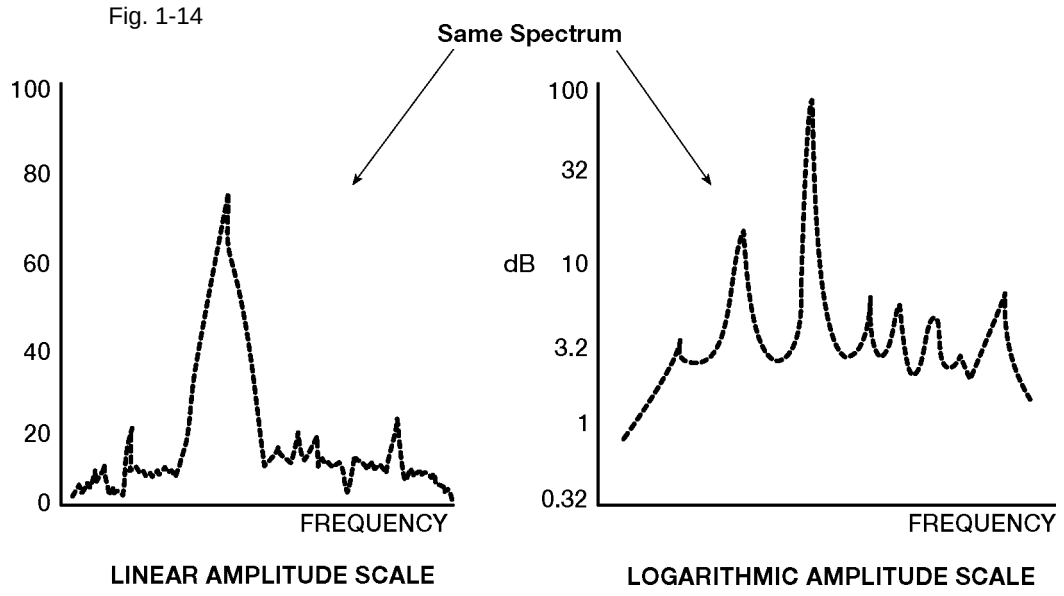

- The graph on the left shows the actual sound level from various sources.
- The graph on the right shows the customer perceived sound level from the same sources and easier to read.

Natural Frequency

All vibrating systems have a **specific vibrating frequency** unique to that system design. This frequency is called the **natural frequency**.

If any of the characteristics of the vibrating system change then the **natural frequency changes**. (as stated in the section on frequency)

If the **external force** on a vibrating system is changed then the **amplitude changes** but the **natural frequency remains the same**.

Natural Frequency

Fig. 1-15

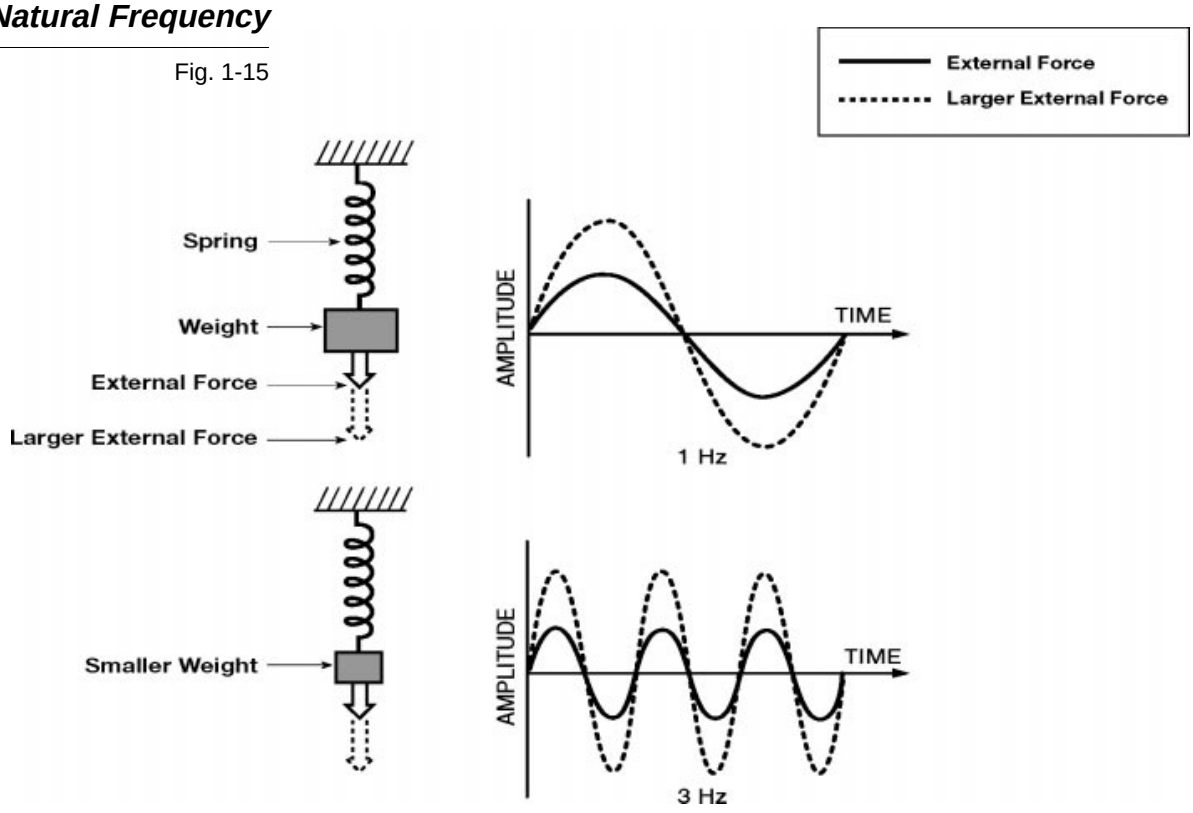

A vibration or sound that develops in a vehicle may be caused by a change in the status of a component like a bad seal in a strut. The natural frequency of the suspension system is changed due to the loss of dampening in the strut. The suspension system will now vibrate noticeably over the same road conditions which had not previously caused a customer concern.

In this example the technician can resolve the customer concern by restoring the suspension system to the original condition and natural frequency.

Resonance

Resonance occurs when the **vibrating force** (external force) on a vibrating system is moving at the **same frequency (Hz)** as the **natural frequency** of that vibrating system. Fig. **1-15** shows the wave form of the natural frequency of the system and the wave of the vibrating force at the same frequency. The resulting wave that occurs is at the same frequency but with much greater amplitude.

This is a significant phenomenon in a vehicle because the increased level is sensed by the customer and perceived to be a problem.

Resonance

Fig. 1-16

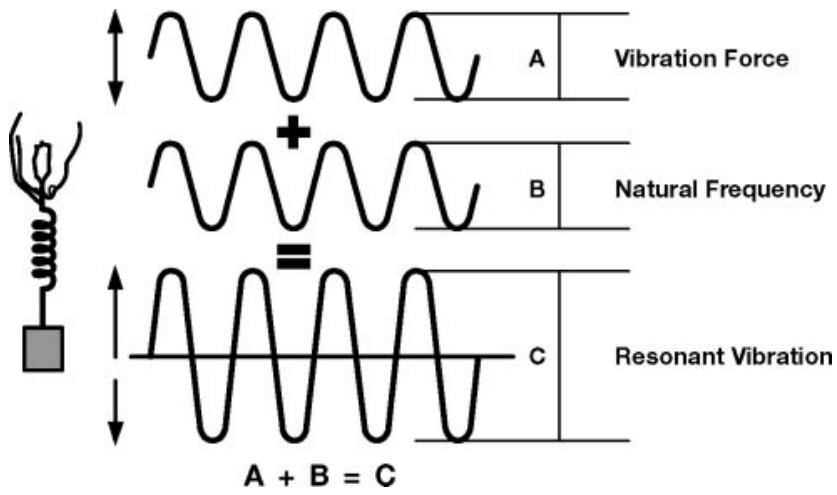

The frequency (Hz) at which this occurs is the **"resonance point"**.

The amplitude (dBg) of the vibrating system increases dramatically when the resonance point is reached.

Resonance Point

Fig. 1-17

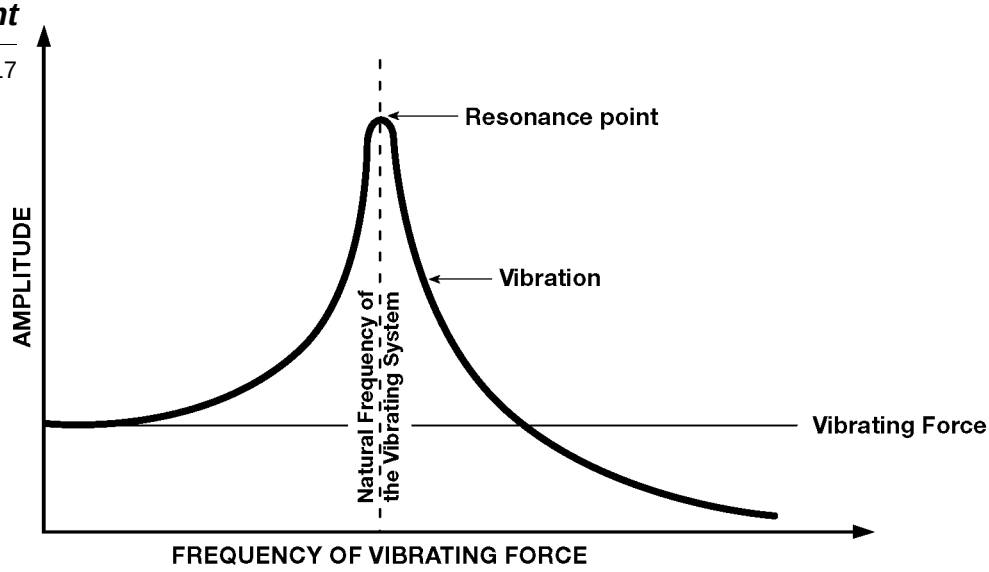

Resonance
Continued

In the above example with the suspension system vibration (caused by the leaking strut), the vibration the customer feels is amplified when:

- The new natural frequency of the suspension system and the frequency of the tire on a rough road are the same
- When the frequencies are the same they resonate increasing the level or amplitude

When the leaking strut is repaired the original natural frequency of the suspension system is restored. The suspension system frequency will not be the same as or resonate with the frequency of the tire on a rough road during normal operating conditions.

Fig. 1-16 shows that moving the vibrating force frequency to either side of the resonance point will **lower the amplitude**.

If the vibrating force cannot be changed then changing the natural frequency of the vibrating system will also lower the amplitude.

The shock absorber, in the suspension system example, changes the natural frequency of the suspension system. The technique is called **dampening**. The shocks change the resonance point of the system and reduce the vibration felt by the customer.

Varying the Frequency to Modify Resonance

Fig. 1-18

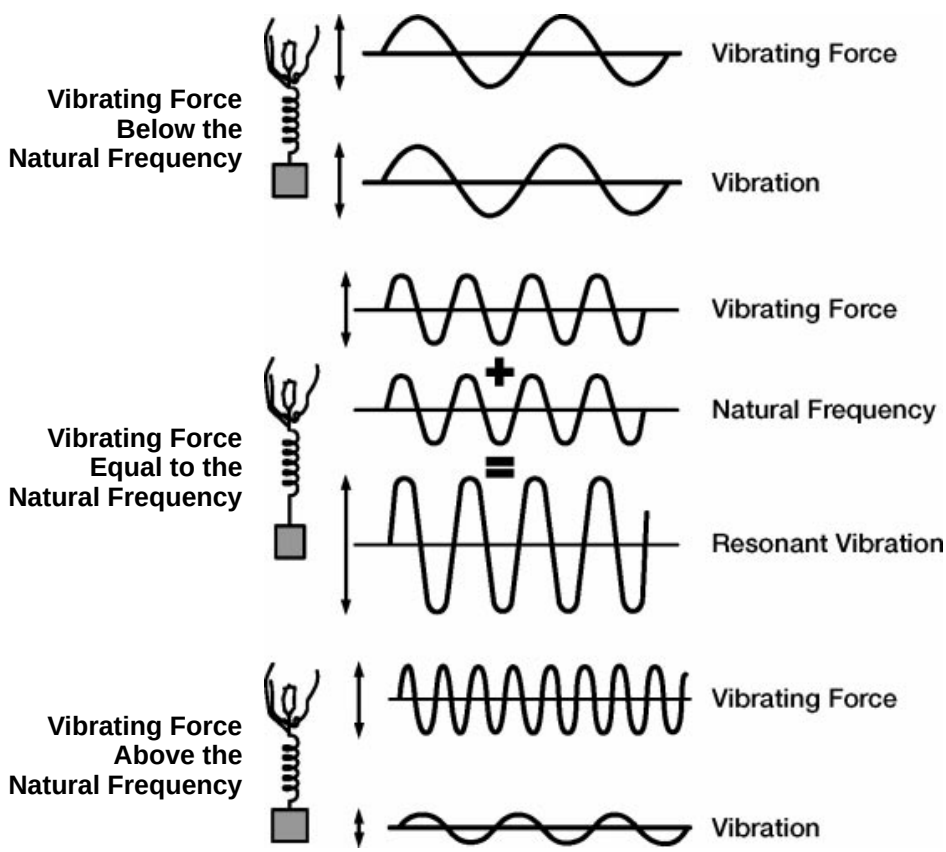

Resonance
Continued

Another example of resonance is an unbalanced tire as it reacts with a suspension system. The vibration is usually more noticeable at a specific speed range. This is the point when the vibrating force (unbalanced tire) and the natural frequency of the suspension system resonate. The customer feels a strong vibration when this occurs due to the significant increase in the vibration level (amplitude).

In this case, balancing the tire will return the system back to the original design and move the resonance point out of the normal operating range. The customer will no longer feel a vibration.

Resonance Graph

Fig. 1-19

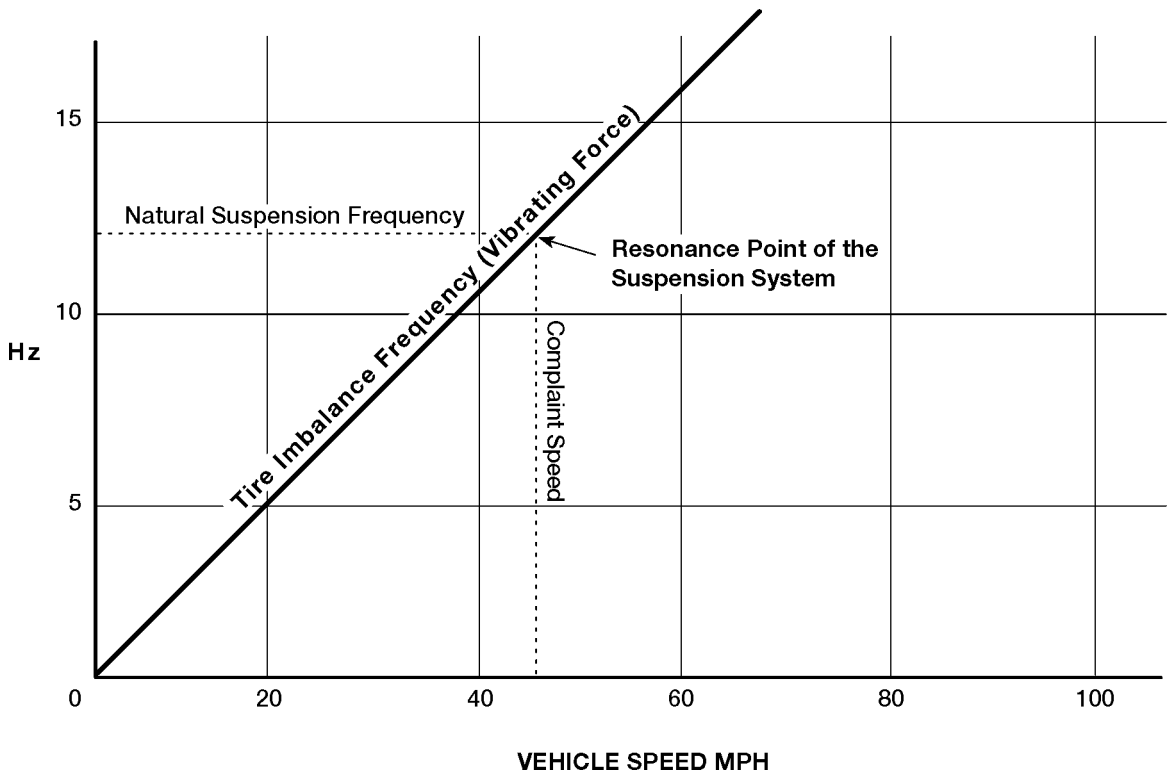

Resonance
Continued

Resonance is not always a negative condition. Engineers use the phenomenon of resonance in the design of a number of products including the **knock sensor**. The knock sensor is monitored by the ECM to modify timing.

The vibration generated by a detonation or a knock is transmitted through the cylinder block to the knock sensor. The natural frequency of the piezoelectric element in the sensor is designed to match the frequency of the vibration caused by the knock. When the knock occurs, its frequency and the natural frequency of the sensor are the same, and they resonate.

The amplitude of the vibration sensed increases sharply due to the resonance of the element.

At the same time the voltage generated by the piezoelectric element in the sensor increases in proportion with the amplitude. The computer monitors the voltage and makes corrections to engine timing to eliminate the detonation or knock.

The vibrating force, in this case, is the explosive force created by an abnormal combustion of the fuel.

Knock Sensor

Fig. 1-20

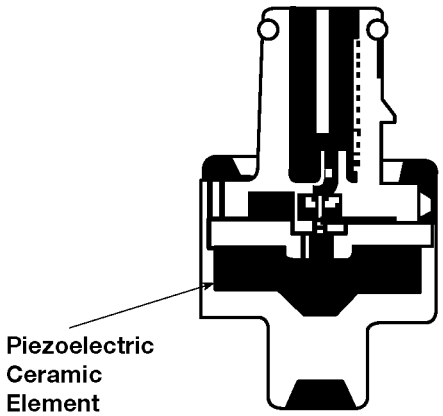

CROSS SECTION
OF A KNOCK SENSOR

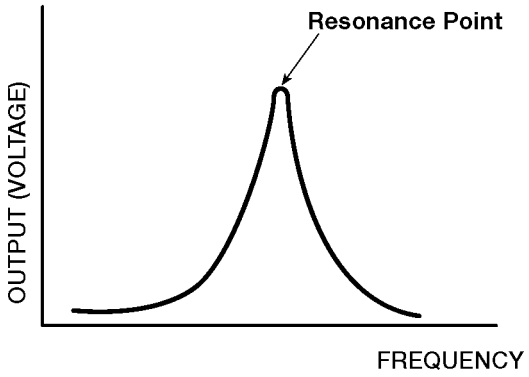

OUTPUT CHARACTERISTICS
OF A KNOCK SENSOR

Transmission of Vibrations and Sounds

Vibrations and sounds are transmitted the same way. There has to be a:

- Vibrating force
- Resonating system
- Transmission system (path)
- Vibrating element (vibration)
- Vibration of air (sound)

Transmission of Vibrations and Sound

Fig. 1-21

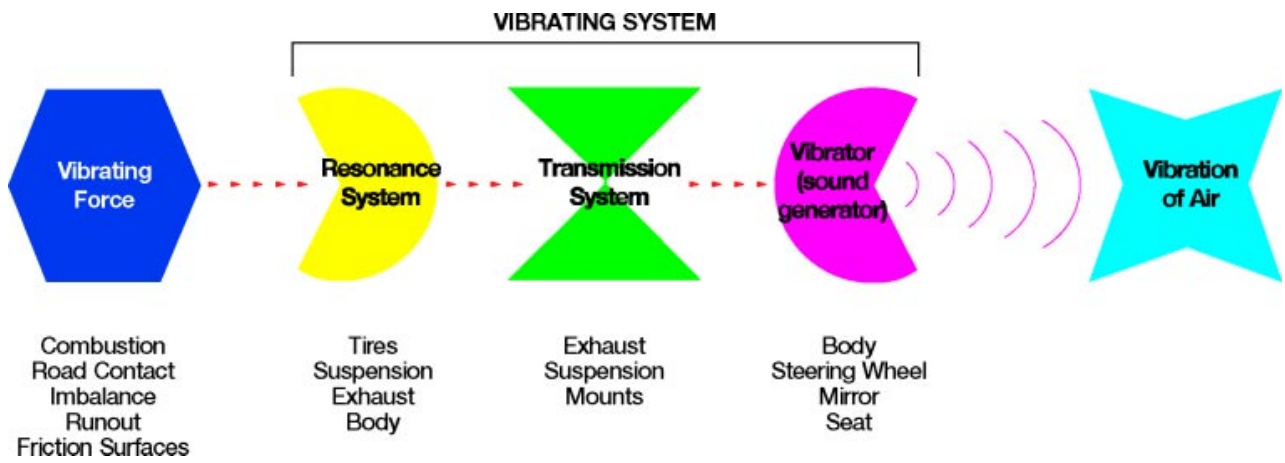

Transmission of Vibrations and Sounds
Continued

Examples of **vibrating forces** in automobiles are:

- Combustion (engine firing)
- Tires contacting a rough road
- Imbalance or run-out of a rotating component
- Fluctuation of friction surfaces

A **Resonance System** is any component on the vehicle that resonates when it receives a vibrating force. All components will resonate if the vibrating force matches the natural frequency.

The most common examples are:

- Tires resonate when vibrated by the road
- Suspension systems will resonate with an out of balance tire
- An exhaust system will resonate when vibrated by the engine

The **Transmission System** is the path in the vehicle that carries the vibration from the resonance system to the vibrator (sound generator).

Examples of a transmission system or path are the:

- Exhaust system
- Engine mounts

These components carry engine vibrations through the vehicle.

The following are examples of methods used to minimize the level of vibration felt by the customer through modifying the transmission path:

- Rubber O ring exhaust hangers
- Liquid filled mounts

The **Vibrator** (sound generator) is the component that generates the vibration or sound that the customer senses.

Examples of a vibrator (sound generator) are:

- Body
- Steering wheel
- Seat
- Shifter
- Mirror

Asphalt sheeting on a body panel is an example of a **modification** to the vibrator to insulate the passenger compartment from a vibration or sound.

Examples of Transmission Paths

Fig. 1-22

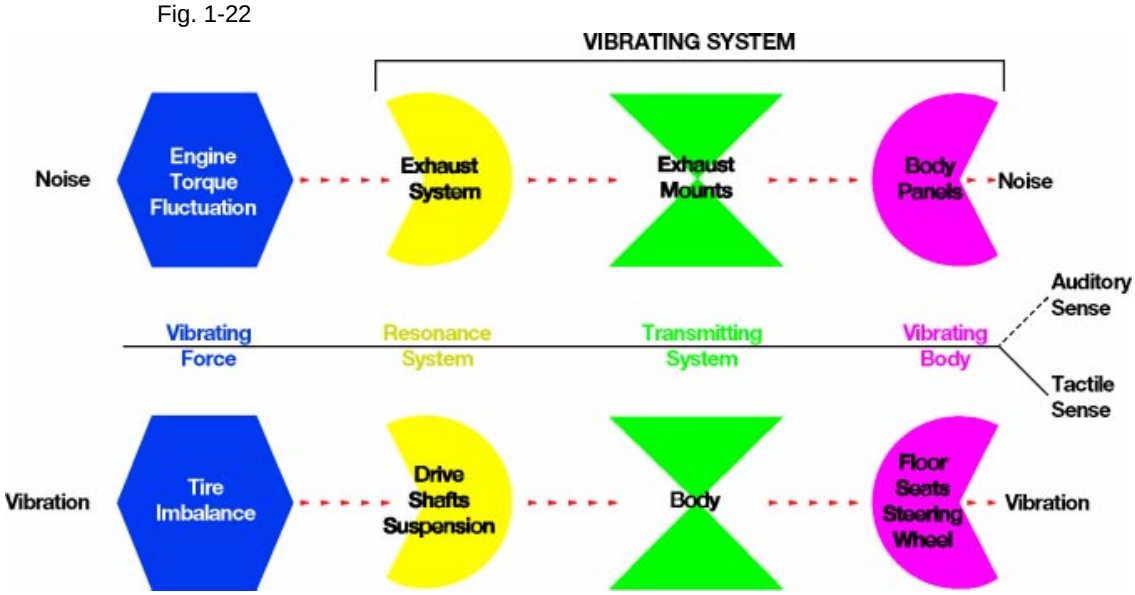

Preventing Vibrations and Sounds

Diagnosing and repairing NVH concerns can be easily understood by looking at the vibrating force and the transmission of vibrations and sounds.

Transmission of Sound

Fig. 1-23

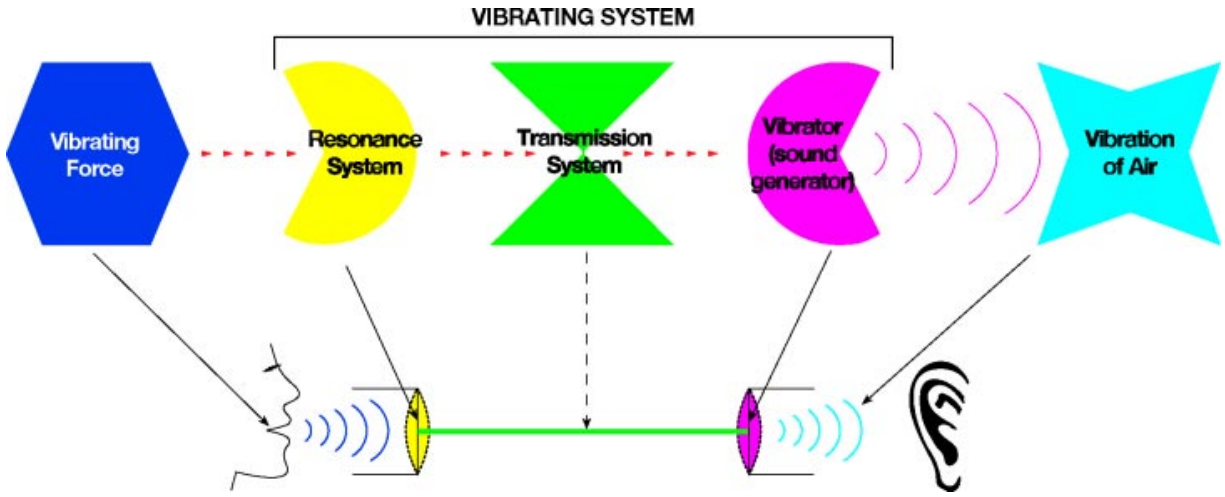

Preventing Vibrations and Sounds
Continued

The vibrating force is usually the **first** area a technician considers in troubleshooting. This is especially true if something has changed with the source such as an imbalance, run-out or a worn component.

In some cases the vibrating force may **not** have changed or may **not** be the easiest area to repair. Changing **any part** of the **vibrating system** will also change the vibration or sound the customer senses.

For example:

A vibration that is a result of an exhaust system that is in contact with the body.

- Vibrating force is the engine
- Resonating system is the exhaust system
- Transmission system is the contact of the exhaust to the body
- Vibrating element is the body panels

Engine Vibration/ Noise Transmission

Fig. 1-24

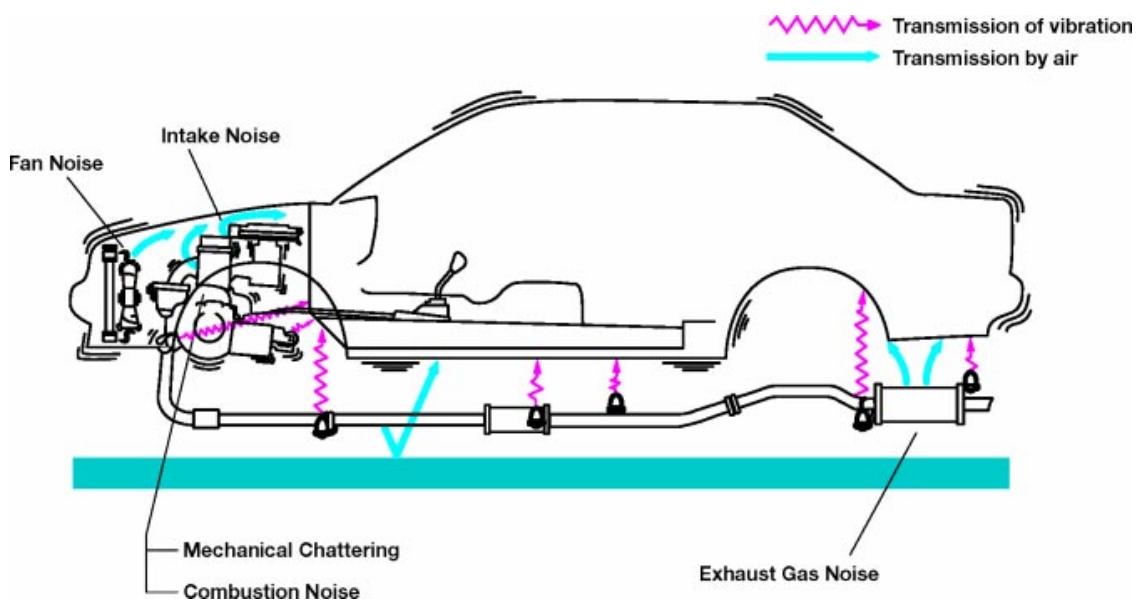

The repair would involve eliminating the **contact** of the exhaust system to the body (transmission path). This is the most likely area where the vehicle condition has changed causing the concern. Careful **examination** of the system should identify the cause of the grounded exhaust. The repair may involve a hanger or replacement of bent exhaust components.

Dampers

Engineers can modify a vibrating system during the design of a vehicle with the use of **mass or dynamic dampers**.

A **mass damper** is an extra weight attached to a resonance system to **lower** its natural frequency. It does two things:

- Moves the vibration or noise outside the normal operating speed range
- Reduces the vibration level or sound pressure level

Mass Damper

Fig. 1-25

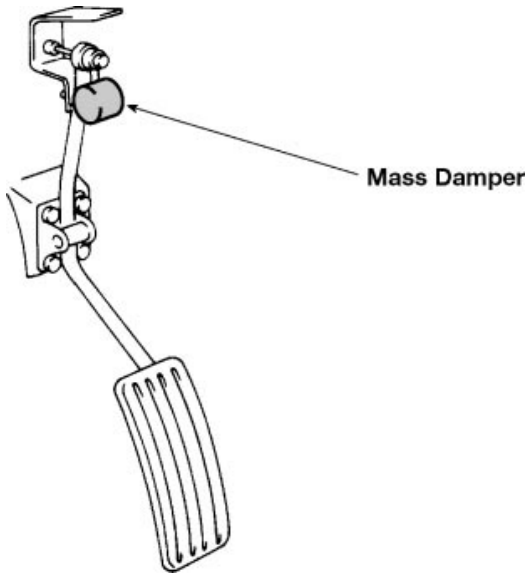

Mass Damper Theory

Fig. 1-26

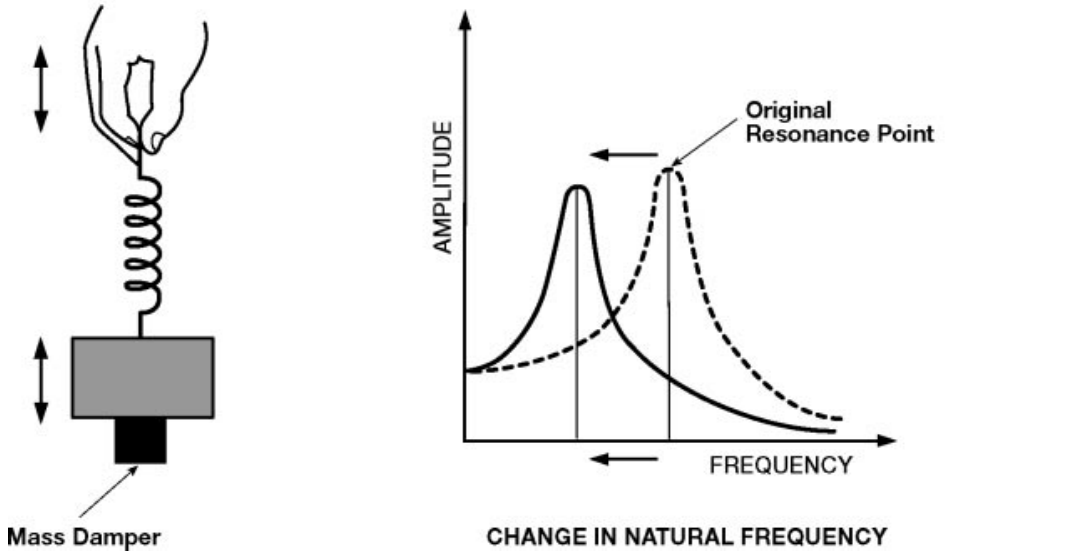

Dampers
Continued

A **dynamic damper** consists of springs (rubber) and a plumb weight that are fitted to a resonance system. When a dynamic damper is added, a large vibration having a single natural frequency is divided into **two vibrations** having **two smaller natural frequencies**.

The vibration level and sound pressure level are **reduced** as a result.

Dynamic Damper

Fig. 1-27

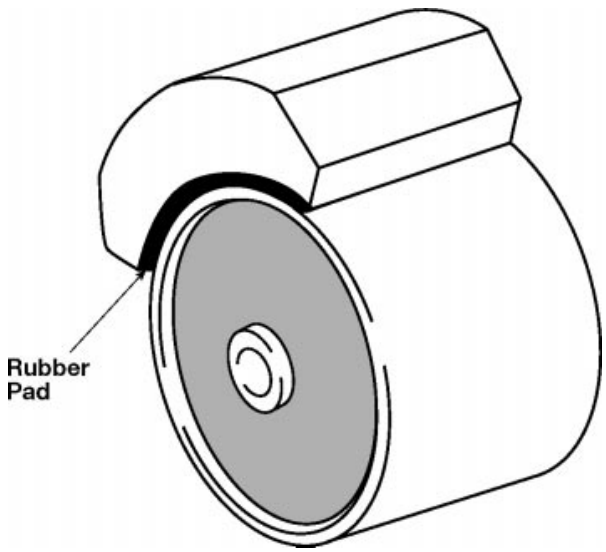

Dynamic Damper Theory

Fig. 1-28

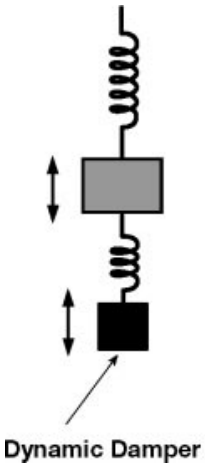

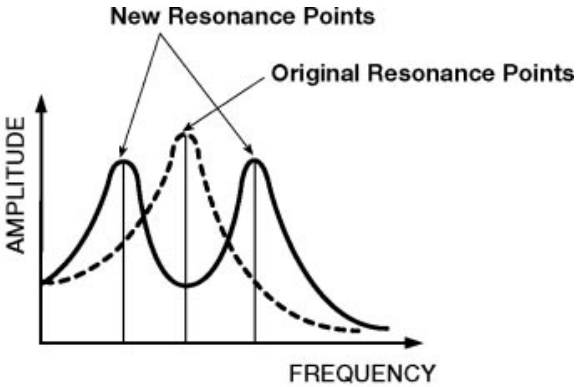

Change in Natural Frequency

Additional NVH Phenomena

Phase is the **lateral shift** of a wave as it relates to **another wave**. For phase to have an impact on the vibrations sensed in a vehicle, there has to be **two vibrations** of the same frequency. The lateral shift determines how the high and low peaks of the waves line up and create the conditions, such as beating, explained below.

Phase

The same sounds with opposed phases will cancel each other.

Fig. 1-29

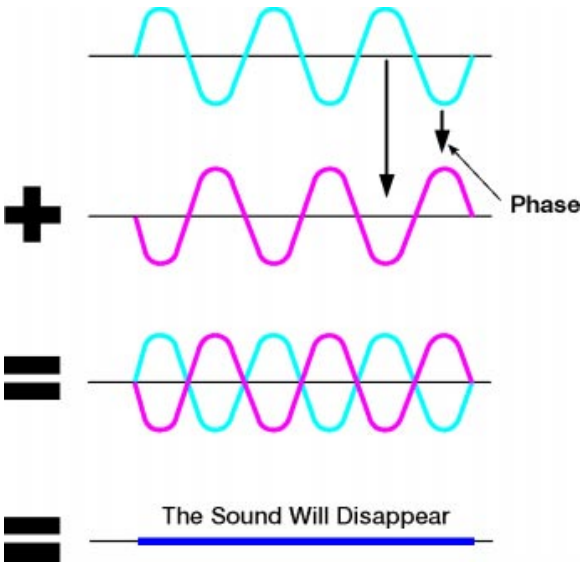

Beating/ Phasing/ Growl

Beating or phasing occurs when two similar vibrations or sounds with **slightly different frequencies** exist in the same area or vehicle.

Over a period of time the phase of the two waves will **change** due to the **slight difference in frequencies**. At times:

- The two higher points overlap and create an even higher peak which raises the level or amplitude.
- The two low points overlap to make an even lower point which lowers the level or amplitude.

This change in intensity or amplitude occurs in a **repetitive manner** at a constant vehicle speed as the phase of the wave changes over time.

The resulting wave creates a sound called **beating**, which is associated with a vehicle having more than one tire out of balance. Tires are not always the same size and will rotate at slightly different speeds (Hz).

This condition can be corrected by **eliminating either one of the vibrations**. If one tire is balanced then the beating noise will be eliminated leaving the constant vibration from the remaining out of balanced tire. Correcting the second tire will return the vehicle to its original condition and ensure customer satisfaction.

You may have noticed a beating condition in a **twin engine boat or airplane**. If the engines are out of “sync” there is a strong cyclic vibration and sound. When the pilot adjusts the RPM on the engines, the beating vibration and cyclic sound goes away.

Growl/Beat Wave Form

Fig. 1-30

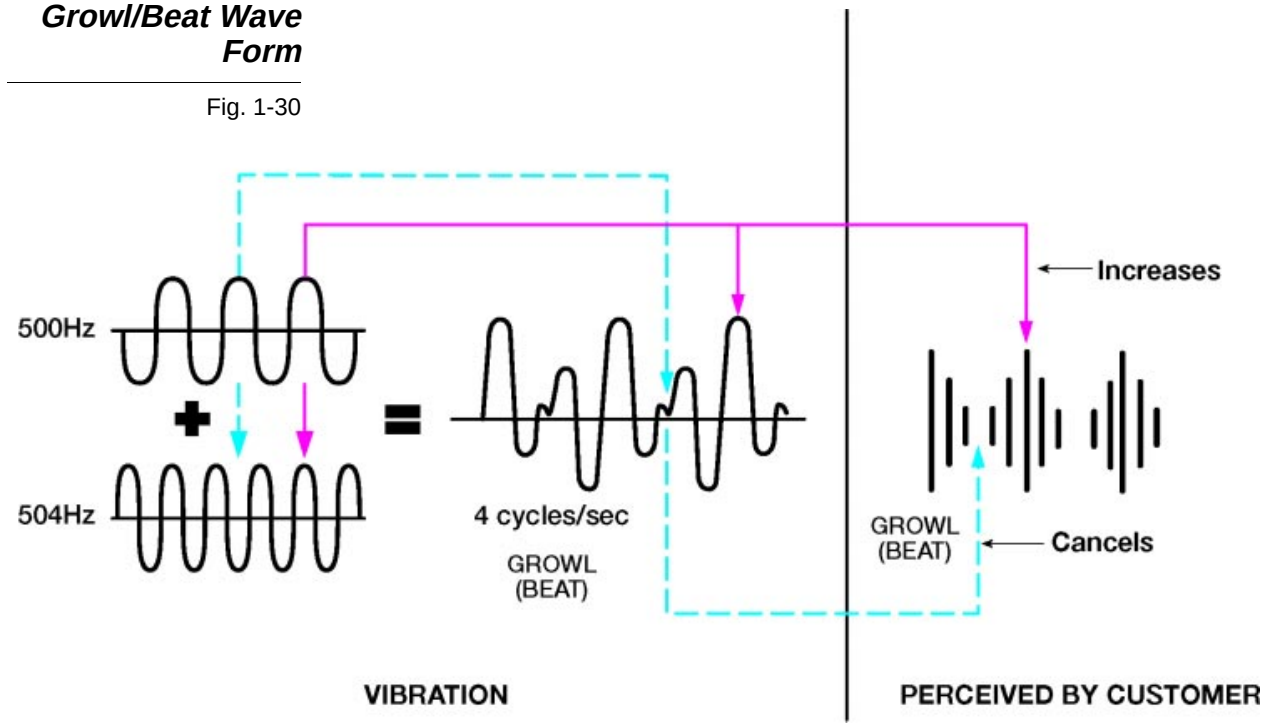

Notes

Order A **single** vibrating force may generate **more than one** vibration.

For example:

> An out of balance tire can develop multiple vibrations due to the distortion of the tire as it rotates. This is a characteristic of radial tires. The tire is no longer round and bumps rise on the tire causing the additional vibrations.

The distortion of the tire is caused by **centrifugal force** as the tire rotates. Centrifugal force is similar to swinging a yo-yo in a circle. The faster you swing it, the more the pull. This **pulling force** is what causes the tire to change shape.

Tire Frequencies

Fig. 1-31

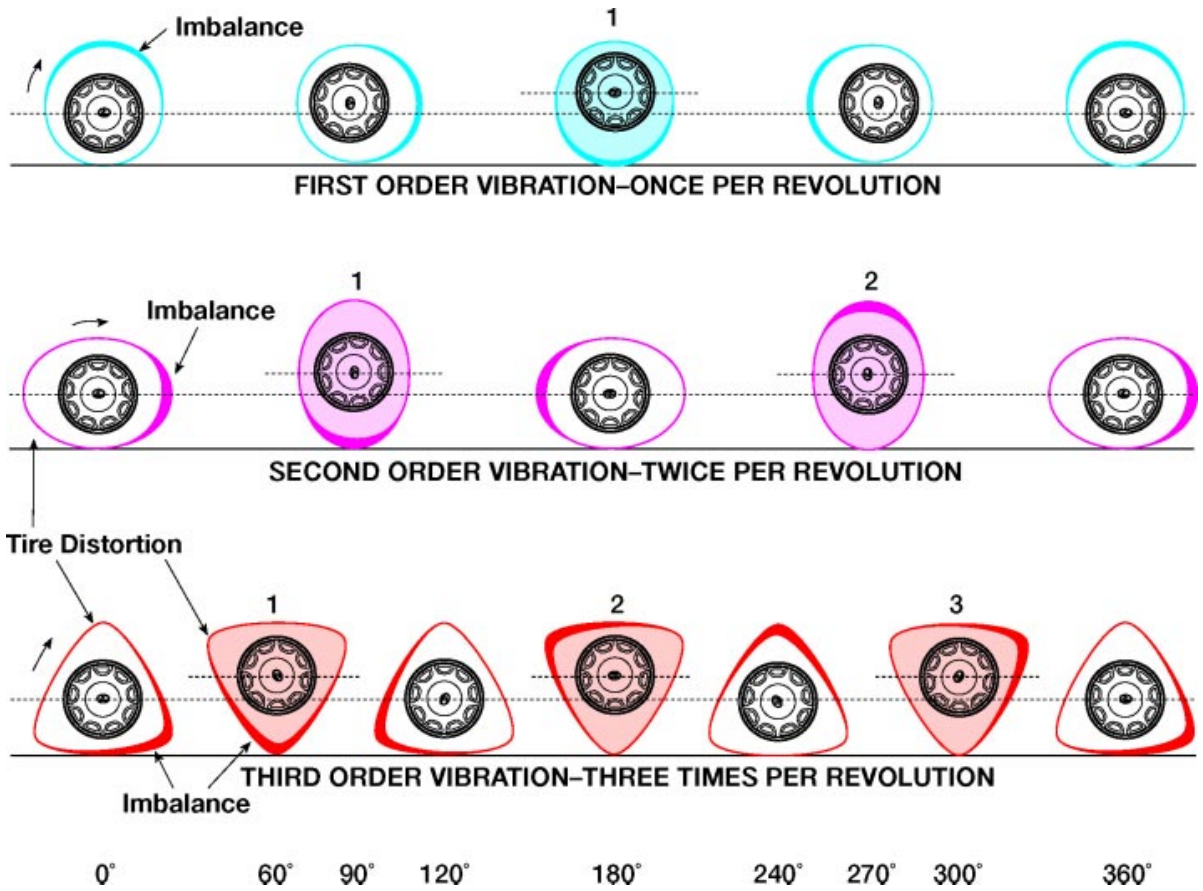

As the tire rotates, the heavy spot on the tire causes an **up and down motion** as it contacts the road. This will induce a vibration into the suspension and steering system which will be felt by the driver. The centrifugal force of the rotating heavy spot also contributes to the up and down movement.

Order
Continued

The vibration caused by the heavy spot is a **first order** vibration. It occurs **once every revolution** of the tire.

A first order vibration can be the largest amplitude vibration of the vibrations caused by the imbalance.

Due to centrifugal force and the heavy spot, the tire changes shape raising **additional high spots** on the tire. As these spots contact the road they also cause an up and down motion that is induced into the suspension and steering systems.

This second vibration is caused by a second bump in the tire as a result of the change in shape. It is usually smaller in amplitude than the first order vibration. This is called the **second order** or second component vibration.

Because there are **two vibrations in one rotation** of the tire, the second order vibration will be approximately **twice the frequency of the first order** and a spike on a frequency analyzer will appear at that frequency.

The third vibration is caused by a third bump as a result of the change in shape. It is generally smaller in amplitude than the second order vibration though there are some applications and speeds where it may be greater in amplitude than a first order vibration. This vibration is called the **third order or tertiary component** vibration. It will appear as a spike on a frequency analyzer at three times the first order vibration due to the **three vibrations in one revolution** of the tire.

Multiple Order Tire Vibrations

Fig. 1-32

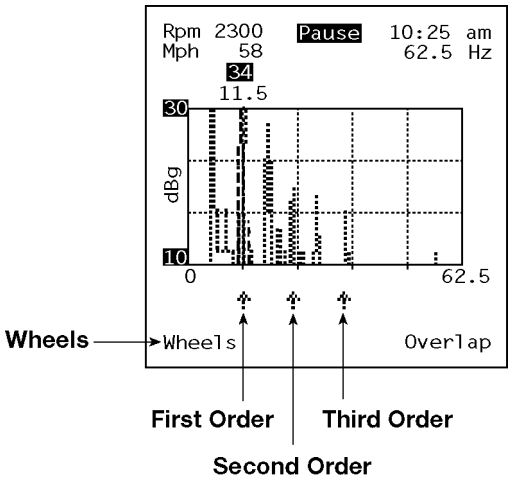

Order
Continued

Driveline vibrations are caused by:

- Imbalance
- Runout
- U-joint condition

The force from a driveline imbalance or runout will usually cause a first order vibration because it occurs once per revolution of the shaft.

Driveline concerns relating to U-joints are caused by:

- Phase
- Joint condition i.e.: tight/loose
- Working angle/inclination

As a U-joint rotates it accelerates and decelerates **twice per revolution**. Therefore conditions relating to U-joints will generate second order vibrations.

Driveline Vibrations

Fig. 1-33

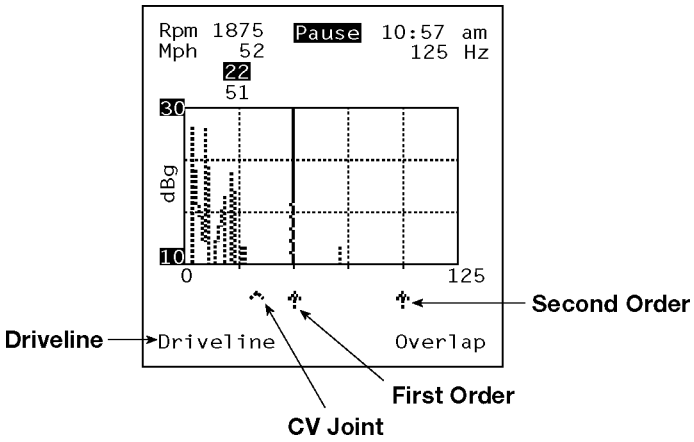

Order
Continued

Engines will also generate multiple vibrations. A first order engine vibration is associated with the **rotational force or torque**. It is usually associated with imbalance or runout conditions such as in a flywheel, torque converter or harmonic balancer.

Engine Vibrations

Fig. 1-34

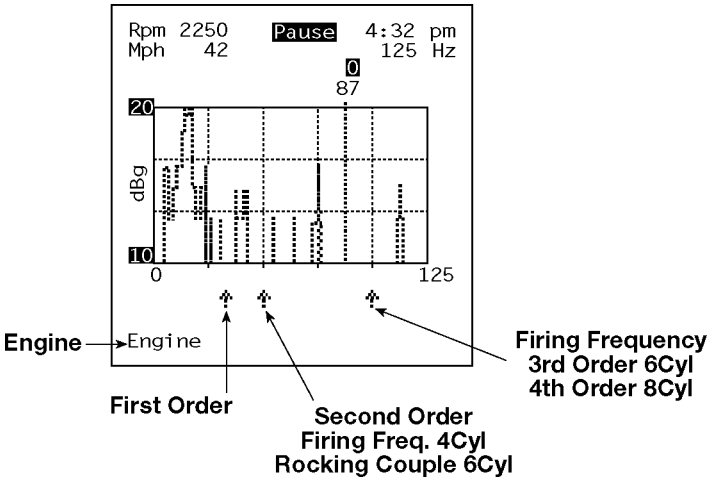

Engine firing or combustion will produce **vibrations relative to the number of cylinders** in the engine. The order will be **one half the number of cylinders.** A four-stroke engine requires two complete revolutions of the crankshaft to fire all the cylinders.

For example:

A four cylinder engine fires cylinders 1 and 3 in the first revolution and 2 and 4 in the second revolution. Two pulses per revolution are generated which is a second order vibration. (Second order of crankshaft frequency)

Order
Continued

A six cylinder engine fires three cylinders in the first revolution and three in the second causing three pulses per revolution or a third order vibration.

Firing Frequency

Fig. 1-35

FIRST ORDER ENGINE		FIRING FREQUENCY		
RPM	Hz	4CYL 2nd Order	6CYL 3rd Order	8CYL 4th Order
500	8.3	16.6	24.9	33.2
750	12.5	25	37.5	50
1000	16.6	33.3	49.8	66.4
1500	25	50	75	100
2000	33.3	66.6	99.9	133.2
2500	41.6	83.2	124.8	166.4
3000	50	100	150	200
3500	58.3	110.6	174.9	233.2
4000	66.6	132.4	199.8	266.4

Fourth, fifth and greater order vibrations can exist but the first three are most common, noticeable and useful for diagnosis. If the technician identifies and repairs any of the first three vibrations the remaining vibrations will also be reduced.

The NVH Analyzer will display **all of the most common vibrations** in an operating vehicle. It also uses **arrows** to point to various order vibrations of the engine, driveline and wheels. The arrows aid in the diagnosis of vibrations by pointing to the **frequencies associated with these sources**.

If a technician notes a large spike over one of the arrows, then a **pinpoint diagnosis** can begin in the area indicated by the arrow.

Harshness

Harshness is the condition a customer senses when a vehicle contacts a **single impact** such as road irregularities, railroad tracks or speed bumps.

The level of impact that the customer senses depends on the **type of suspension** used on a vehicle. A sports car suspension system is designed for handling and to give the driver a good “feel of the road”. A luxury vehicle is designed to provide the most comfortable ride possible, insulating the driver from unpleasant sensations.

A harshness concern is relative to the type of vehicle involved and should be compared to other vehicles of the **same type**.

Transmission Path of Harshness

Fig. 1-36

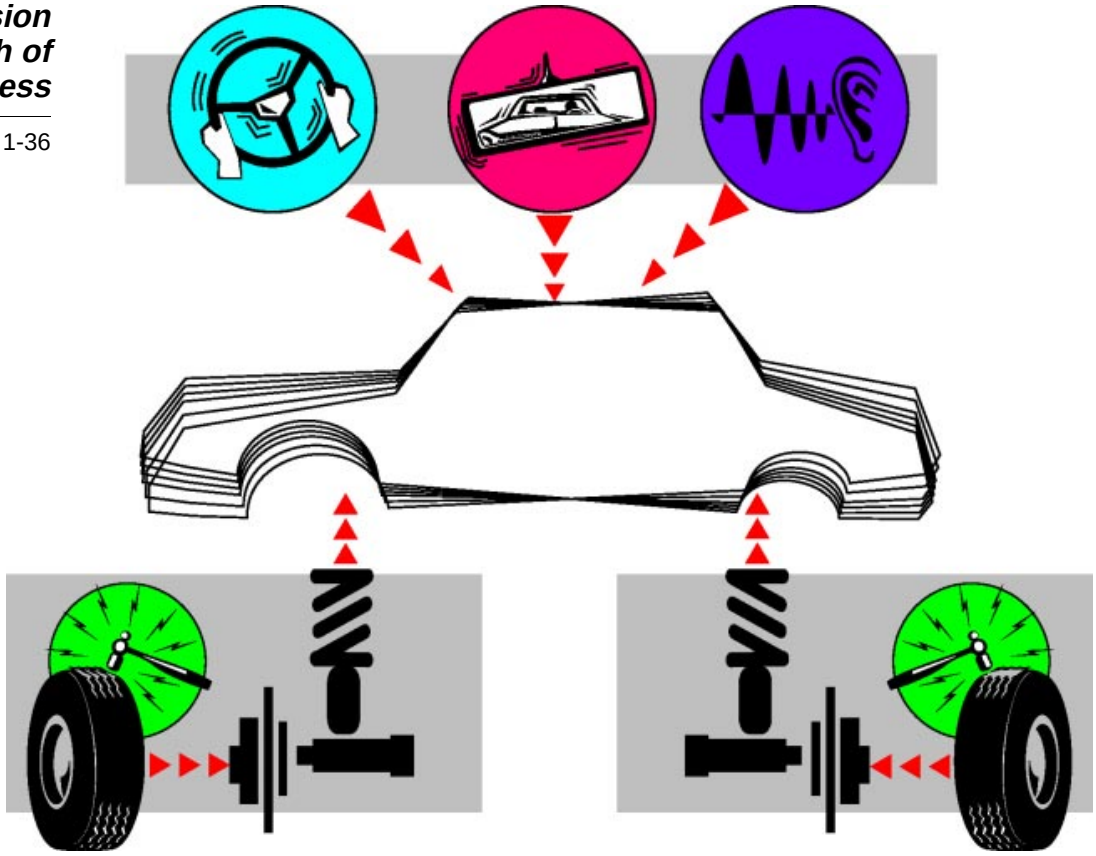

A vibration analyzer will **not** be the primary tool used to diagnose a harshness concern because the incident is **momentary and difficult to isolate**. In addition, the source causing the disturbance is already known and **cannot** be controlled. What has usually changed, causing the concern, **is the transmission system or path**.

A good **visual inspection** starting at the location in the vehicle where the symptom seems to originate, will usually identify the component that has changed or deteriorated.

NVH in Automobiles

There are **three major sources** of vibration in an operating vehicle.

- Engine/Accessories
- Driveline
- Wheels and tires

Each of these sources usually rotate at **different speeds or frequencies** in an operating vehicle. This is useful in diagnosis. A component generating a vibration can be associated with one of the source groups if the frequency of the vibration can be determined (discussed in Section 2).

For example:

A V8 LS400, traveling at 54 MPH, in OD, will have:

- An engine speed of 1854 RPM/30.9 Hz
- A driveline speed of 44 Hz
- Wheel speed of 12 Hz

LS400

Fig 1-37

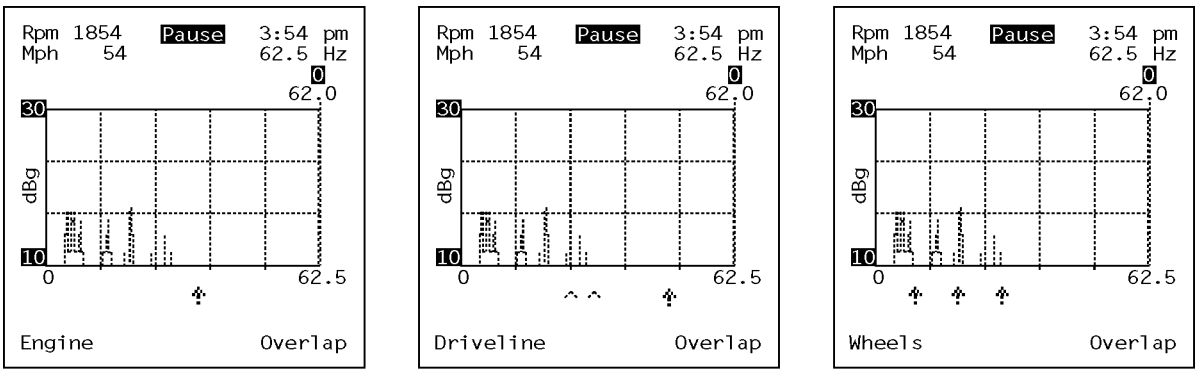

ENGINE **DRIVELINE** **WHEELS**

The different speeds of these component groups above, are determined by the **gear ratios of the transmission and differential**. Therefore, the speeds will be different for vehicles with different tire sizes, transmissions and differentials.

Shifting gears will also change engine speed at the same MPH. This will be useful for diagnosis during a road test where **modifying the symptoms** can help **isolate** the source (discussed in Section 2).

Section 2 provides the diagnostic procedures to **classify the symptom** and identify one of the three major source groups generating the condition.

Section 3 deals with pinpoint diagnostic procedures to **isolate the condition** causing the vibration or noise.

NVH in Automobiles
Continued

In addition to a frequency analyzer, **our everyday experience** with common vibrations and noises can be helpful in diagnosis. As a technician you have become accustomed to how many vibrations feel. This experience can be applied to troubleshooting a vibration in a vehicle.

If a symptom feels like one of the examples in fig. **1-38** then the **frequency is the same** as noted. This frequency or speed can now be associated with a component group and pinpoint diagnosis can be conducted in that component area.

For example:

A vehicle traveling between 40-50 MPH has a vibration that feels like a spinning washing machine (10-15 Hz). It is likely to have a wheel condition causing the vibration. At 40-50 MPH the wheel frequency is approximately 10-15 Hz depending on the tire/wheel diameter.

Example Vibrations

Fig. 1-38

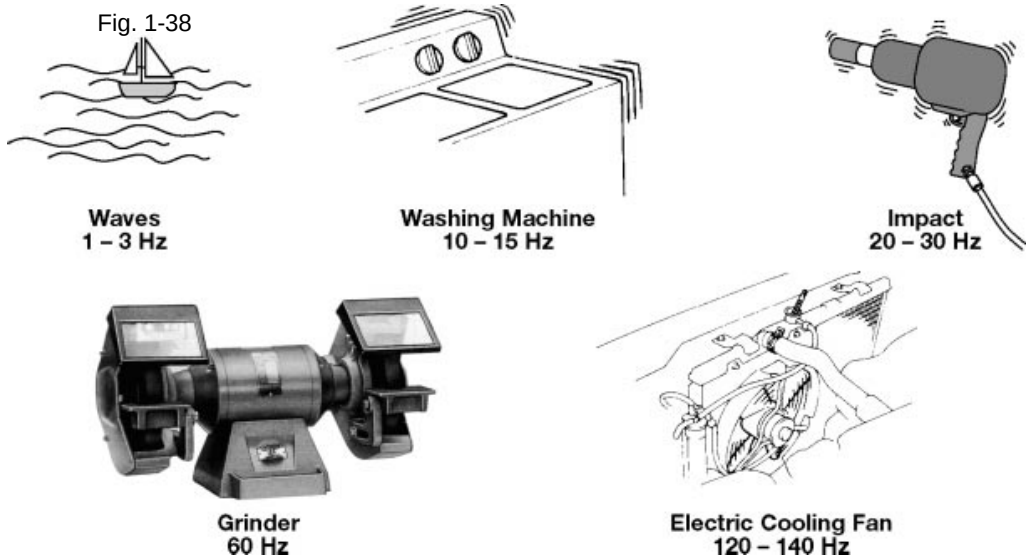

Common NVH Symptoms

In order to help **standardize** and define the terms used to describe NVH symptoms, the following chart has been developed as a reference. It will be used extensively throughout this course.

The chart covers the common NVH conditions that occur in an operating vehicle. It includes:

- A description of the NVH condition
  - What the customer senses
  - Under what circumstances the NVH condition occurs
- Associated frequency range
- Vibrating force
- Vibrating system of the vibration or sound
- Other characteristics specific to the condition

SYMPTOM	SENSATION	CONDITIONS
Body Shake	1. A major vertical and/or lateral vibration of the body, seats and steering wheel. 2. Frequency 10-30 Hz	1. The vibration occurs at a specific speed when driving at a moderate or high speed.
Steering Flutter and Shimmy	1. Rotational steering wheel vibration 2. Shimmy has a relatively low frequency 5-15 Hz 3. Flutter is a higher frequency than shimmy	1. Flutter vibration is usually constant and generated at a limited range of speed during moderate to high speed driving. 2. Shimmy is generated when driving over a rough road or when the brakes are applied. It occurs at a lower speed than flutter and increases with vehicle speed.
Accelerator pedal vibration	1. A vibration of a small amplitude, transmitted from the accelerator pedal to the driver's foot. (it never vibrates along the stroke direction of the pedal). 2. Frequency 20-200 Hz (4cyl)	1. The vibration occurs at a high engine RPM 2. Vehicle speed has no impact on the vibration.
Shift lever vibration	1. A vibration of a small amplitude felt at the shift lever. 2. Frequency 100-200 Hz	1. The vibration occurs at a specific RPM at high engine speed.
Riding comfort	1. Refers to a slow swaying motion of the entire vehicle rather than a vibration. 2. It also refers to impacts from road irregularities being transmitted directly to the vehicle body. 3. Frequency 1-15 Hz	1. Generated when going over large bumps or dips in the road surface. 2. It is also generated when driving on irregular roads at a specific speed.
Harshness	1. A momentary heavy impact that resembles hitting the tire with a hammer. The vibration is felt in the steering wheel, seats, and floor. 2. It may be accompanied by a high-pitched impact sound. 3. Frequency 30-60 Hz	1. When going over road joints and gaps, the tire is deformed locally by an impact in the front-to-rear direction. 2. The impact is transmitted to the suspension system and body.

CAUSES	VIBRATING SYSTEM	REMARKS
Vibrating forces 1. Tire runout, imbalance or a uniformity problem 2. Rotor or Drum Imbalance 3. Axle hub eccentricity, runout or imbalance Resonators 1. Suspension 2. Engine 3. Body 4. Seat 5. Steering Linkage	1. The vibrating force of the tire condition causes a vibration that is transmitted from the axle through the suspension system. 2. The vibration will resonate with the body or engine which will cause the body to shake heavily. 3. The vibration of the body is transmitted to the steering wheel and seat.	1. The vertical and lateral shake may occur alternately every ten seconds, approximately. This is a result of a slight difference in the tire radius. A constant speed for at least ten seconds is required to attain this condition. 2. Correcting the tire causing the vibration is usually the most effective method of resolving a body shake.
Vibrating force Flutter 1. Tire runout, imbalance and uniformity condition 2. Rotor imbalance 3. Axle hub eccentricity, runout or imbalance Shimmy 1. Kick-back from a rough road 2. Tire deformation 3. Radical vertical movement during braking Resonators 1. Tires - worn or low air pressure 2. Steering linkage - loose, worn components 3. Suspension - misalignment, lack of shock absorber dampening	Flutter 1. A vibrating force is generated by a tire imbalance. 2. The vibration occurs around the steering axis causing the tire to vibrate to the left and right. This induces a vibration in the steering linkage. 3. When the vehicle reaches a particular speed, the lateral vibration of the tire resonates with the steering system. The steering wheel vibrates rotationally as a result. Shimmy 1. Shimmy is similar to flutter except it is generated by road kick-back, tire deformation, or a vertical vibration from braking. The transmission path is the same as flutter.	1. In modern cars, flutter is more common than shimmy. 2. Flutter and shimmy give similar sensations to the driver, but their mechanisms are not the same. 3. Flutter is a forced vibration caused by the resonance of the vibrating force from the tires and the steering system. 4. Shimmy is a direct vibration generated by the road irregularities or braking.
Vibrating force 1. Engine Vibration Resonators 1. Throttle linkage 2. Cable 3. Pedal	1. The engine vibration causes the throttle linkage and cable to vibrate. 2. The vibration is transmitted to the accelerator pedal.	
Vibrating forces 1. Engine torque fluctuation 2. Imbalance of revolving or reciprocating engine components Resonators 1. Engine and transmission 2. Driveline 3. Shift lever	FR models 1. The engine torque fluctuation or imbalance causes a bending vibration in the driveline. It can be amplified if there is also a propeller shaft condition like imbalance or joint angle. 2. The vibration causes the extension housing to vibrate which in turn causes the shifter to vibrate. The vibration is more noticeable if the shifter is worn. FF models 1. An engine imbalance causes a vibration in the shift lever.	
Vibrating forces 1. Road irregularities Resonators 1. Tires - air pressure 2. Suspension - shock absorber dampening, spring modules of the suspension bushings or springs, rigidity of the stabilizer	1. Road conditions cause the tires to move up and down inducing a vibration in the suspension system. 2. The vibration in the suspension system causes the vehicle to bound and rebound which is felt as swaying by the passenger.	
Vibrating force 1. Pavement joints, gaps, rail road tracks and speed bumps Resonators 1. Tire characteristics 2. Suspension 3. Body	1. Harshness is greatly effected by tire characteristics. New low-aspect ratio tires have contributed to harshness concerns. 2. Suspension system bushing design has been modified to include slits which help improve the ride.	

SYMPTOM	SENSATION	CONDITIONS
Road noise	1. A continuous blasting or rumbling sound at a constant pitch. It increases with the vehicle speed. 2. It also accompanies a very fine vibration seen on a vibration analyzer but difficult to feel. 3. Frequency ranges from 30-60 Hz and from 80-300 Hz	1. It changes with the surface of the road. The rougher the road, the more noise.
Tire pattern noise	1. A high pitched whining and roaring noise. 2. The noise may change from roaring to whining as the vehicle speed increases. 3. Frequency 100-5k Hz	1. Occurs on pavement with tires having blocked or lug pattern tread. 2. The noise is more noticeable on flat, well paved roads.
Body Booming noise	1. A heavy droning sound that is oppressive to the ear and difficult to tell where it is coming from. 2. Sometimes accompanies vibration in the body, seat and floor. 3. The frequency increases as the vehicle speed increases. Frequency 30-100 Hz at low to medium speed and 100-200 Hz at high speed. (4cyl)	Booming noise is heard at a specific engine or vehicle speed. The range is very narrow. 1. When affected by vehicle speed ± 6 MPH of peak speed 2. When affected by the engine RPM ± 50 RPM of peak RPM
Engine noise	1. A continuous sound heard in the passenger compartment that increases with engine RPM. 2. Frequency 200-2k Hz	1. It is heard when the engine is running at a high speed or under load.
Wind noise	1. The hissing or whistle of air heard near a window. 2. Wind noise increases with vehicle speed and can change with wind direction. 3. Frequency 500-5000 Hz	1. It occurs at approximately 40-50 MPH with the windows shut.

CAUSES	VIBRATING SYSTEM	REMARKS
Vibrating force 1. Small road surface irregularities Resonators 1. Tires 2. Suspension system 3. Body	1. When driving on rough pavement, a fine vibration occurs in the tire which causes the tire to resonate and the vibration is amplified. 2. The vibration is transmitted through the suspension system to a body panel that vibrates generating the noise.	1. Suspension bushings are also designed to provide a good balance between road noise and handling.
1. Pumping of air by the tire tread.	1. Air is trapped and compressed between the grooves of the tire and the road as it rotates. 2. As the section of the tire leaves the ground, the compressed air is released and expands creating the sound.	1. Pattern noise is greater if the area to trap air is larger such as truck tires. It is more noticeable if the grooves are perpendicular to the car's body.
Vibrating force 1. Imbalance of rotating and reciprocating engine components, torque fluctuation 4cyl twice per revolution, 2nd order/secondary engine component 6cyl three times per revolution, 3rd order/tertiary engine component 2. Torque fluctuation due to propeller shaft joint angle twice per revolution, 2nd order/secondary driveline component 3. Propeller shaft imbalance once per revolution, 1st order/primary driveline component 4. Clutch assembly imbalance 5. Exhaust noise 6. Intake noise 7. Tire uniformity condition Resonators 1. Twisting of the driveline 2. Bending of the driveline 3. Exhaust pipe 4. Rear suspension system 5. Outer body panels	Due to propeller shaft joint angles 1. A propeller shaft joint accelerates and decelerates twice per revolution and generates a torque fluctuation twice per revolution. The vibration is greater the greater the angle. 2. The torque fluctuation starts to vibrate the driveline at a specific speed. The vibration is transmitted via the rear suspension arm bushings and springs to the body panels which generate the booming noise. Due to propeller shaft imbalance 1. An unbalanced propeller shaft generates a vibration once per revolution. 2. The vibrating force bends the driveline and the vibration is transmitted via the rear engine mount, center bearing, rear suspension bushings, to the body panels which generate the booming noise. Due to the transmission of exhaust noise 1. Exhaust noise can be transmitted to the body panels through the floor with direct contact or through the vibration of the air.	1. The body booming noise can be engine related or vehicle speed related 2. Check to see if the condition exists when the engine reaches a specific RPM or if it occurs while coasting which indicates vehicle speed related. 3. Knowing the frequency and order is very helpful in diagnosing which component is generating the vibration.
Vibrating force 1. Mechanical noise - valve train, timing chain, piston, connecting rod, crankshaft, accessories 2. Combustion noise 3. Fan noise 4. Intake air noise 5. Exhaust noise Resonators 1. Engine 2. Accelerator cable 3. Body panels	1. The sound is transmitted through the air or through the body via engine or exhaust mounts.	1. Engine noise can be improved by reducing the noise from the source or insulting against the noise. 2. The following are examples: Holes plugged with grommets Asphalt sheets Sealer Sandwich steel sheets with insulators inside Pad for engine hood Specially designed engine mounts
Vibrating force 1. Swirls of air generated by protrusions and steps in the body surface. 2. Leakage of air through gaps in the body.	1. Wind noise is generated when air hits or is swirled by an object. The sound enters through a door or window. 2. Wind noise is also caused by leakage through a gap. When the vehicle is moving, the pressure outside the vehicle is lower than inside and the noise is created when the air escapes.	1. Refer to the Interior Noise and Wind Noise programs for detailed procedures on repairs.

SYMPTOM	SENSATION	CONDITIONS
Body Beating noise	1. The level of the sound changes cyclically. 2. The cycle becomes shorter as the vibrating force speed increases. 3. The cyclical sensation is more apparent when it occurs between 2-6 times per second.	1. It occurs at a specific engine or vehicle speed. 2. When two sounds having slightly different frequencies are present, the level of the combined sound changes cyclically and is felt as a beating noise. 3. When the two high points of the wave coincide, the level of the sound is amplified. When the two low points line up, the level is much less noticeable.
Transmission gear whine	1. A high pitched clear sound that is noticed from the front seats. 2. Frequency 400-3k Hz	1. It is specific to a particular gear position and is not heard when the gear is connected directly with the engine.
Differential gear whine	1. A high pitched, clear sound heard from the front of FF vehicles and the rear of FR vehicles. 2. Frequency 400-1500 Hz	1. It occurs at medium speed 25-30 MPH regardless of gear position. 2. When it occurs during acceleration, it will disappear when the pedal is released. When it occurs during deceleration, it will disappear when the pedal is engaged.
Clutch judder	1. The forward and backward shocks to the body when the clutch is engaged. It stops when the clutch is completely engaged. 2. Frequency 10-20 Hz	1. It occurs when the clutch is partially engaged, starting from a stop, especially under a load such as an incline. 2. It usually does not occur when the vehicle is in motion.

CAUSES	VIBRATING SYSTEM	REMARKS
1. Two vibrations are required and could be a combination of the following: Engine imbalance - 1st order Torque fluctuation - 2nd order 4cyl, 3rd order 6cyl Torque converter imbalance Propeller shaft imbalance - 1st order driveline Flange runout - 2nd order driveline Joint condition or angle - 2nd order driveline Tire vibration Cooling fan imbalance Alternator vibration A/C compressor vibration Power steering pump vibration	1. Torque converter imbalance will generate a beating with another vibration such as a propeller shaft vibration when the conditions are as described. Slippage of the torque converter can contribute to the difference in frequencies creating the beating. 2. The vibrations are transmitted to the body through the engine mounts from the torque converter and the rear suspension from the propeller shaft. 3. Correcting the propeller shaft may be the easiest repair. 4. Depending on the gear ratio of the transmission a beating can occur between an engine vibration and a driveline vibration if the frequencies of each are only slightly different. 5. Engine vibrations and accessory vibration can match to cause a beating noise. Removal of belts will help identify the accessory causing the vibration. 6. Depending on differential gear ratio tire vibration and propeller shaft or engine vibrations can cause a beating noise. 7. Two imbalanced tires with a different radius can cause a beating noise.	1. Beating noise due to torque converter slippage can be identified by checking it during lock-up or fluctuating the accelerator pedal. 2. A constant speed is necessary to allow the beating noise to cycle. 3. Due to the fact that a beating noise requires two vibrations, if one is eliminated the beating noise will stop leaving the remaining vibration.
Vibrating force 1. Gear meshing error - nicked, worn or damaged tooth, incorrect teeth contact, gear runout and backlash, gear supporting rigidity Resonators 1. Gear vibration 2. Transmission case 3. Engine supports and mounts 4. Propeller shaft 5. Rear suspension 6. Body panels	FR 1. Inaccurate meshing of the transmission gears causes the gears to vibrate. 2. Gear vibration vibrates the transmission case, which vibrates the body panels via the rear engine support members. 3. Gear vibration is also amplified by the resonance of the propeller shaft and the rear suspension. FF 1. Sound is transmitted from the transaxle case to the body via the engine mounting and shifter.	1. Gear selection is the key to diagnosis between transmission and differential gear whine. 2. Familiarity with the transmission power flow will assist in determining which gear is 1:1 and the gears that could be in question. 3. Bearing noise is similar to gear whine and must be considered during disassembly.
Vibrating force 1. Same as transmission gear whine Resonators 1. Same as transmission gear whine	FR 1. Inaccurate meshing of the differential gears causes the gears to vibrate. 2. The vibration is transmitted to the differential carrier and amplified by the resonance of the propeller shaft and the rear suspension. It is then transmitted to the body. FF 1. The noise is transmitted directly to the passenger compartment via the case, mounts, cables, and the air.	
Vibrating force 1. Friction characteristics of the facing material and runout of the clutch disc 2. Unequal height of the diaphragm spring fingers 3. Binding of the clutch cable or linkage Resonators 1. Driveline	1. Intermittent slippage occurs when partially engaging the clutch, transmitting engine torque vibrations. 2. Induces a torsional vibration in the driveline. If resonance occurs, the vibration is amplified. 3. Amplified torque fluctuation is transmitted to the tires and rocks the vehicle back and forth.	1. Foreign material such as oil or grease will contribute to the condition.

SYMPTOM	SENSATION	CONDITIONS
Take-off vibration	1. A slow and weak vibration of the body and steering wheel during initial acceleration. 2. Frequency 15-30 Hz	1. It occurs when the clutch is slightly engaged with the engine at idle or when engaged abruptly at 800-900 RPM. 2. A load such as an uphill grade can also contribute to the vibration.
Cranking vibration	1. A very slow vibration felt in the body and seat during cranking. 2. Frequency 5-15 Hz	1. The vibration begins when the starter is activated and stops when the engine starts.
Idle vibration	1. A slow vibration of the body, steering wheel and seats. 2. Frequency 10-50 Hz.	1. Engine idle, not moving, in gear or A/C on.
Brake vibration	1. A vibration of the dashboard, steering wheel and seats when the brakes are applied. 2. It is felt at the pedal at the same frequency as the vibration. 3. Frequency 10-30 Hz	1. Occurs when the brakes are applied at medium to high speeds.
Brake squeak	1. A very high pitched squeaking noise or low solid groan. 2. More common from disc than drum brakes. 3. Frequency 5-20 Hz.	1. Occurs when brake is applied lightly or heavily.

CAUSES	VIBRATING SYSTEM	REMARKS
Vibrating force 1. Torque fluctuation of the engine Resonators 1. Engine mounts 2. Body 3. Steering wheel	1. When the clutch is partially engaged during initial vehicle movement, the engine RPM drops momentarily and results in a major torque fluctuation. This causes a rolling vibration of the engine. 2. The vibration is transmitted via the engine mounts to the body. The engine sometimes hits the mounting stops. The instrument panel and steering wheel shake as a result.	1. Take-off vibration is also caused by coupling created by a joint angle of the three joint propeller shaft on FR vehicles. In this case, the vibration is transmitted to the floor by the center carrier, causing the shifter and floor to vibrate. 2. It is also caused by a wind-up on vehicles with rear leaf springs.
Vibrating force 1. Torque fluctuation during starting of the engine Resonators 1. Engine mounts 2. Body	1. Engine rolls due to the fluctuation in compression. 2. This movement acts on the mounts causing the body to shake.	1. A heavy hitting noise could be associated with this condition if components such as the exhaust contact the body.
Vibrating force 1. Torque fluctuation of the engine Resonators 1. Engine mount 2. Exhaust pipe and supports 3. Body	1. Torque fluctuation causes a rolling vibration which is worse if under a load or in poor operating condition. 2. The engine vibration is transmitted to the body through the mounts. 3. The exhaust system will also vibrate and will be transmitted to the body by the O-rings. 4. The body vibration will cause the steering wheel and seat to vibrate.	1. Transverse mounted engines are more prone to this type of vibration and have specially designed mounts and exhaust systems
Vibrating force 1. Rust or runout, in the rotor 2. Runout of the rear axle flange 3. Runout of the rotor and rim mating surface Resonators 1. Pad 2. Brake pedal 3. Steering knuckle, axle hub or shaft 4. Suspension 5. Body	1. Runout of the rotor causes the pad to vibrate during braking. 2. The pad vibration is transmitted along the brake hydraulic circuit and causes the pad to vibrate. 3. It is also transmitted to the rotor, steering knuckle, axle shaft or hub, causing an up and down or front to back vibration. 4. The vibrations are transmitted to the body via the suspension system causing a shake.	1. Lug nut torque is important to minimize the chance of the unequal strain contributing to the condition. 2. If it occurs at high speed the tires should also be checked for runout which could contribute to a brake vibration.
Vibrating force 1. Fluctuation and friction of the pads Resonators 1. Pads 2. Rotor	1. The friction surface between the brake components causes a vibration which resonates with the rotor.	1. It is important that the anti-squeal components are in place during installation.

Notes

Section 2

NVH DIAGNOSTIC PROCEDURES

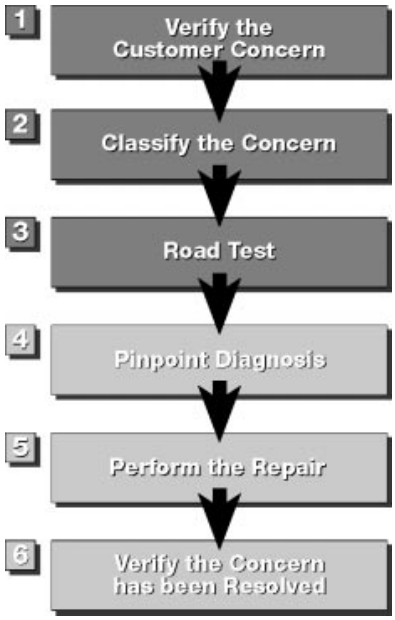

Lesson Objectives

1. Develop skills in the use of NVH Diagnostic Procedures.
2. Demonstrate the ability to verify the customer concern.
3. After verifying the concern select the appropriate course of action:
   - Customer consultation
   - Technician diagnosis and repair
   - Technical assistance
4. Demonstrate the ability to classify the customer concern using the:
   - Customer Interview Sheet
   - Classification Flow Chart
5. Differentiate between the purpose of a test drive with the customer to verify the concern, and the road test for diagnosis.
6. Given a list of road test procedures, select a road test appropriate for the symptoms.
7. Develop skills using the NVH Analyzer.
   - Set-up
   - Data Displays
   - Data Analysis
8. Determine the source and order of the vibration or noise using the NVH Analyzer.
9. Differentiate between conditions that are serviceable versus non-serviceable.
10. Determine the appropriate use of a lift or safety stands for diagnosis.
11. From the use of the NVH diagnostic procedures, demonstrate the ability to draw conclusions that will allow you to develop a pinpoint diagnostic plan.

Introduction

An organized, systematic procedure is important in any type of diagnosis.

It is the most efficient/cost effective way to resolve concerns the first time. NVH concerns are sensed by feeling or hearing and are therefore, very subjective in nature.

A good **systematic diagnostic procedure** is critical to deal with these types of concerns because the symptoms may not clearly point to the condition. Systematic diagnostic procedures will help you successfully resolve NVH conditions as they do with difficult computer and electrical concerns.

Elements incorporated in a systematic diagnostic procedure are:

- An organized **process of elimination** which prioritizes activities to quickly isolate the condition
- A thorough **visual inspection** for obvious conditions or clues to help diagnose the condition

NOTE

In order to apply these elements to NVH troubleshooting, a solid understanding of the NVH theory in Section 1 is important. Diagnosis applies the theory to isolate the condition. An incorrect diagnosis usually results from a poor diagnostic procedure, a lack of understanding on how the system works or both.

This section of the course will address in detail the first three items of the NVH diagnostic procedure:

- Verify the concern
- Classify the concern
- Road test with NVH analyzer

Practice implementing the NVH diagnostic procedure will be accomplished by following **two customer concern scenarios or case studies**.

- The first scenario is incorporated in this section of the technician handbook.
- The second is part of the worksheet activities.

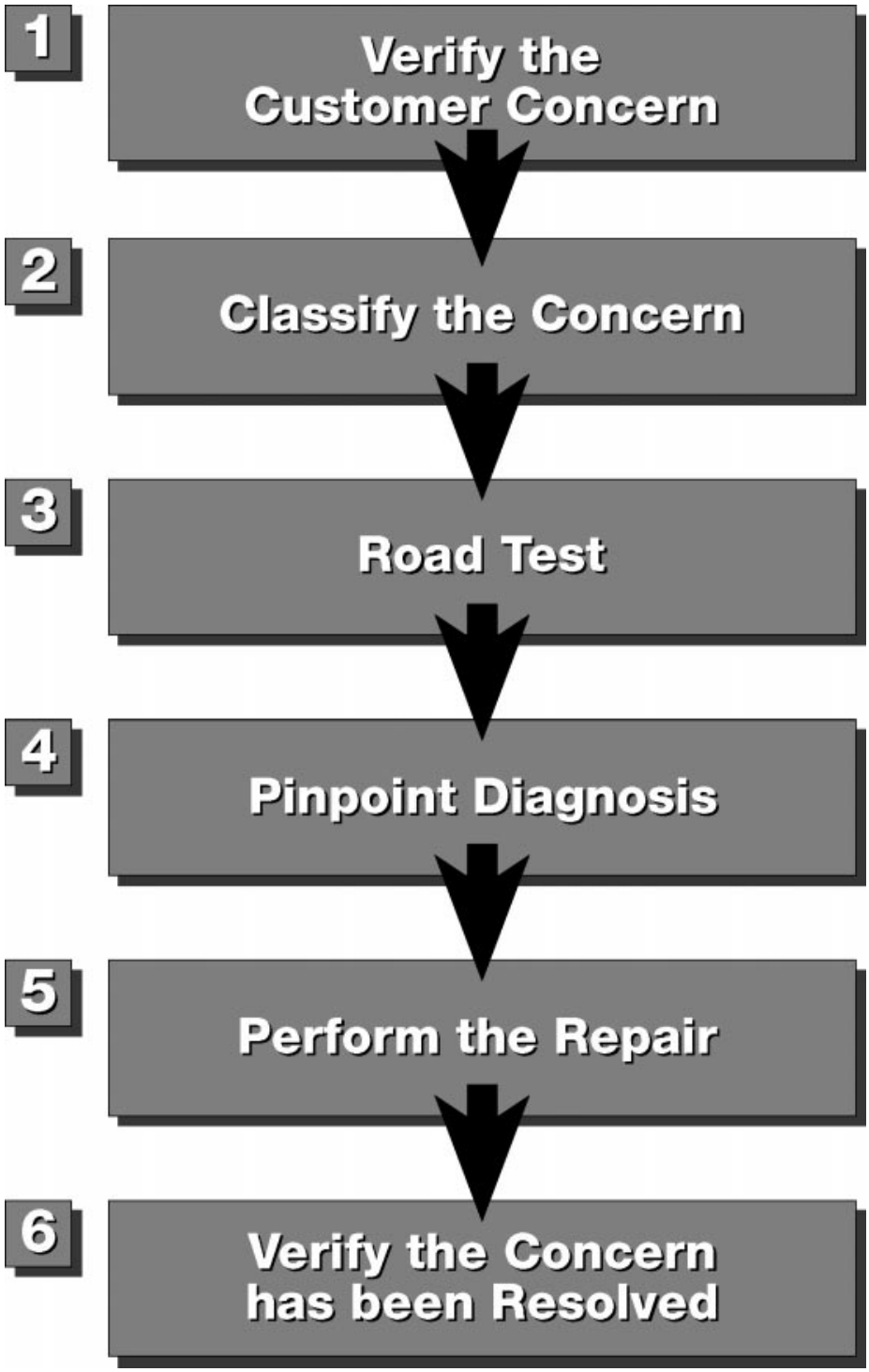
1
Verify the Customer Concern
2
Classify the Concern
3
Road Test
4
Pinpoint Diagnosis
5
Perform the Repair
6
Verify the Concern has been Resolved

Fig. 2-1

Case Study: Background

In order to help illustrate the concept of NVH diagnosis we will apply the principles outlined above to a customer concern involving a LS400. Each topic in this section will be applied to the scenario and at the end of the section the condition will be resolved.

The details of the diagnostic scenario are contained in the following repair order. They are also included in each procedure and illustration as it applies.

Repair Order for LS400

Fig. 2-2

LEXUS
123 Main St.
Happy Valley, CA 90001-2001
(714) 555-1234
B.A.R. #AG654321

THANK YOU FOR DOING BUSINESS
WITH LEXUS DEALERSHIP
SAVE OUR EARTH
PLEASE RECYCLE

SERVICE WORK ORDER

PAGE 1 OF 1 **** REPRINT **** DATE 8/26/93 TIME 10:09 JOB# 12 RO# 22967

*** SERVICE HISTORY ***

???	DATE	MILES	PRIME ITEM	MENU ITEMS
???	04/28/93	022549		

MENU/OP PRIME ITEM	INSTRUCTIONS/NOTES	CONDITION 01 - CUSTOMER PAY
	CUSTOMER STATES THAT THERE IS A NOISE/VIBRATION FELT IN STEERING WHEEL AND SEAT BETWEEN 40 AND 60 MPH. NOISE COMES FROM REAR. CUSTOMER STATES THAT VEHICLE NEEDS ALIGNMENT.	

QTS.OIL
LBS.GREASE
GAL. GAS
QTS. TRANS.
ESTIMATE $ 65.00
ADDITIONAL $
TOTAL $
SERVICE ADV. 500
SAVE PARTS (Y)
PHONE READY (Y) WAIT
PROM. TIME 12:03 PM ☒
DATE 8/26/93
AUTH. TIME PM ☐
DATE
OK'D
SA: MIKE GLUCKER

TERMS
☐ CASH
☐ CREDIT CARD
☐ CHARGE

DISCLAIMER OF WARRANTIES
I hereby authorize the repair hereinafter set forth to be done along with the necessary material and agree that you are not responsible for loss or damage to vehicle or articles left in vehicle in case of fire, theft or any other cause beyond your control or for any delays caused by unavailability of parts or delays in parts shipments by the supplier or transporter. I hereby grant you and/or your employees permission to operate the vehicle herein described on streets, highways or elsewhere for the purpose of testing and/or inspection. An express mechanic's lien is hereby acknowledged on above vehicle to secure the amount of repairs thereto.

NOTICE TO CONSUMER: PLEASE READ IMPORTANT INFORMATION ON REVERSE SIDE

CUSTOMER SIGNATURE X

VIN J T 8 U F 1 1 E 0 P 0 1 4 9 8 1 1
YEAR 93 MAKE LEXUS COLOR BLACK ONYX MODEL LS400
MILES 25318 LICENSE MYLEXUS PROD. DATE 8/92 DOFU 10/02/92
NAME LARRY JOHNSTON
ADDRESS 9101 W. FAIR VIEW
CITY ANY TOWN STATE ID ZIP CODE 91101
HOME PHONE BUS.PHONE EXT.

(*HAZARDOUS MATERIAL) Removal charge for all hazardous materials removed from your automobile, that must be disposed of as hazardous waste.

Case Study: Background
Continued

*Each area of this section includes a worksheet which is **based on a customer concern scenario**. Your instructor has created a similar concern in a shop vehicle for you to troubleshoot.*

*Detailed information and instructions for the worksheets will be provided by your instructor. Upon **completion** of each worksheet, the concern should be **resolved** on the shop vehicles.*

Verify the Customer Concern

Verification of the customer concern is a **key starting point** in an NVH diagnostic procedure for two reasons:

- If the concern can't be verified, a plan can be implemented that involves satisfying the customer through education or returning the vehicle for service when the concern can be duplicated.
- It is important that the technician experiences **exactly** what the customer is concerned about and knows what is involved to satisfy the customer.

There are **three courses of action** to successfully resolve an NVH concern:

1. Customer consultation
2. Technician diagnosis and repair
3. Technical assistance for non-serviceable conditions

Starting a diagnostic procedure **implies** that there is a concern with the vehicle. The service department is then **committed to the second or third course of action**. If it is discovered **after the diagnosis begins** that the concern was not verified, then it is difficult to step back to the first course of action and customer satisfaction is very difficult.

The **earlier** the appropriate course of action is chosen the more likely a **positive service experience** will occur.

Notes

Customer Interview Sheet

The **Interview sheet** is a **tool** designed to solve one of the largest problems identified in NVH service, poor **communication**. Proper communication helps you educate the customer and ensures an appropriate course of action can be taken.

Research involving unresolved NVH concerns indicates that technicians often start a diagnosis without knowing the **exact details** of the concern. This results from a lack of communication with the customer which wastes time or causes a missed diagnosis.

Good communication skills include:

- **Description or terminology** that mean the same thing to all parties involved.
- **Time** to help the customer **clarify the concern**. (The customer is not expected to know the technical terms of the automotive industry).
- **Information** collected in an **organized manner**.

A customer, when properly interviewed, can provide a wealth of information to start the diagnosis and process of elimination.

It is important to determine if the person bringing the vehicle in for service is the **primary operator** of the vehicle. Often, vehicles are brought in for service by someone who has no knowledge of the concern.

The **interview process** is designed to help the customer focus on details of the NVH concern and vehicle conditions when the concern occurs.

The **interview sheet** provides a format to communicate these conditions using **standard NVH terminology**.

Verification of the concern is also a critical area of diagnosis, when the condition is **intermittent or only occurs under specific conditions**.

For example:

> Noises from suspension components may be much more pronounced at ambient temperatures below 40°F. If these temperature conditions are not present at the time of diagnosis, the technician may not experience the concern to the same degree as the customer.

The technician needs to **experience the condition** and be able to duplicate it in order to accurately diagnose it. The more details that are available, the more likely the condition can be found quickly.

An additional benefit of the interview sheet is the documentation of the communication with the customer. It provides **a history of the service experience**. In the event the concern can't be verified, this documentation will provide valuable information in the event of subsequent service visit.

Customer Interview Sheet
Continued

The customer interview sheet is designed to be as **short and concise** as possible. The information collected is divided into the following areas.

- Customer data
- Vehicle data
- NVH data

Interview Sheet for LS400

Fig. 2-3

CUSTOMER INTERVIEW SHEET LEXUS

INSTRUCTIONS
The interview should be conducted and the sheet filled out by personnel trained in NVH diagnosis.
Please fill in or check all areas with the appropriate response, enter N/A if it does not apply.
The details collected during the interview are critical in successfully resolving the concern.

CUSTOMER DATA
Name: *Anybody, John* Date: *7/26/94*
Telephone #: *(310) 555-1001* RO #: *22467*

VEHICLE DATA
Model/Year: *LS400* Mileage: *25318*
VIN #: *JT8UF11E0P0149811*
Is the customer the primary operator of the vehicle? ✔ Yes ○ No

NVH DATA
What type of condition is the customer experiencing? ✔ Noise ✔ Vibration ○ Harshness (ride quality)
Is the condition constant? ✔ Constant ○ Intermittent
When did it start? ✔ While in Service ○ Since New ✔ Gradually ○ Suddenly
○ Other _____

NOISE
Describe the Noise: ○ Squeak ○ Rattle ○ Wind Noise ✔ Other _____
When does the noise seem to be the loudest or most frequent?
At Highway Speed
Note here and mark the location of the noise on the illustration (reverse side of this form).
From the rear

VIBRATION
Where is it felt:
✔ Steering Wheel ○ Floor ○ Seat ○ Instrument Panel
○ Brake Pedal ○ Console ○ Accelerator Pedal
○ Shifter ○ Body ○ Mirrors ○ Clutch Pedal
Describe the vibration:
○ Vertical ○ Horizontal ✔ Rotational
○ Other: _____

HARSHNESS (Ride Quality)
Where do you experience it? *N/A*
When do you experience it? *N/A*
Has the vehicle ever been damaged? ○ Yes ✔ No If so, please indicate where on the illustration.
Is there any relevent service history? ○ Yes ✔ No If so, please describe: _____
Has there been any accessory installation ? ○ Yes ✔ No _____
Is the vehicle used for towing or to carry any cargo or equipment? ○ Yes ✔ No _____

LOCATION INDICATOR

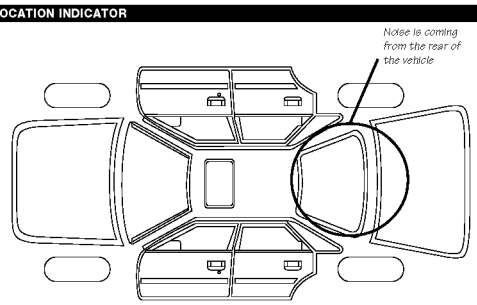

OPERATING CONDITION
When does the condition occur? ○ Starting ○ Idling ✔ Cruise ✔ Coasting ○ Other _____
Vehicle Speed (MPH): *40-60 mph* Engine Speed (RPM): *N/A*
○ Cornering Left ○ Cornering Right ○ Acceleration ○ Deceleration
○ Braking ○ Clutch Engagement ○ Other *N/A*
Accessories: ○ HVAC ○ 4WD ○ Audio ○ Other *N/A*
Engine Temperature: ○ Cold ✔ Normal ○ Hot
Road Conditions: ○ Highway ○ Suburb ○ City
Road Surface: ○ Asphalt ○ Dirt/Off Road ○ Concrete with Expansion Joints
○ Undulating ○ Other Irregularities
Explain: *N/A*

WEATHER CONDITIONS
Temperature: *N/A* °F ○ Clear ○ Rain ○ Ice/Snow ○ Wind
○ Other _____

ADDITIONAL INFORMATION
_____
_____
_____
_____

Customer Interview Sheet
Continued

Customer and vehicle data are for obvious logistical and administrative purposes. The value of this data becomes clear if future tracking of the customer, the vehicle or an NVH condition is required.

Customer and Vehicle Data

Fig. 2-4

CUSTOMER INTERVIEW SHEET LEXUS

INSTRUCTIONS
The interview should be conducted and the sheet filled out by personnel trained in NVH diagnosis.
Please fill in or check all areas with the appropriate response, enter N/A if it does not apply.
The details collected during the interview are critical in successfully resolving the concern.

CUSTOMER DATA

Name: Anybody, John Date: 7/26/94

Telephone #: (310) 555-1001 RO #: 22467

VEHICLE DATA

Model/Year: LS400 Mileage: 25318

VIN #: JT8UF11E0P0149811

Is the customer the primary operator of the vehicle? ✔ Yes ❍ No

The **NVH data** is organized to provide the **details of the concern** and data on **conditions present** when the concern occurs.

Communication is the key objective of the interview sheet and should be done by **trained service personnel** to provide assistance and clarification. Technician involvement in the interview may be required to allow **direct communication** and minimize concerns created by passing information through a third person.

Begin the interview by asking the customer to **classify the concern** by selecting one or more of the following:

- Noise
- Vibration
- Harshness

The next question determines whether the condition is **constant or intermittent**.

The customer should also be asked if the concern has developed while operating the vehicle or whether it has been present since the vehicle was new. This information will be useful to the technician in determining which **course of action** to select, either technician diagnosis or technical assistance.

Customer Interview Sheet
Continued

The customer is provided with a list of possible locations with a few details specific to each location.

For example:

If the steering wheel is the location then there are three possible types of steering wheel vibrations:

- Vertical
- Horizontal
- Rotational

Using this information, in conjunction with the **classification flow chart** (discussed later), will considerably reduce the large list of possible causes of the condition.

NVH Data

Fig. 2-5

NVH DATA

What type of condition is the customer experiencing? ✔ Noise ✔ Vibration ❍ Harshness (ride quality)

Is the condition constant? ✔ Constant ❍ Intermittent

When did it start? ✔ While in Service ❍ Since New ✔ Gradually ❍ Suddenly

❍ Other _____

NOISE Describe the Noise: ❍ Squeak ❍ Rattle ❍ Wind Noise ✔ Other _____

When does the noise seem to be the loudest or most frequent?

At Highway Speed

Note here and mark the location of the noise on the illustration (reverse side of this form).

From the rear

VIBRATION

Where is it felt:

✔ Steering Wheel ❍ Floor ❍ Seat ❍ Instrument Panel

❍ Brake Pedal ❍ Console ❍ Accelerator Pedal

❍ Shifter ❍ Body ❍ Mirrors ❍ Clutch Pedal

Describe the vibration:

❍ Vertical ❍ Horizontal ✔ Rotational

❍ Other: _____

HARSHNESS (Ride Quality)

Where do you experience it? *N/A*

When do you experience it? *N/A*

Has the vehicle ever been damaged? ❍ Yes ✔ No If so, please indicate where on the illustration.

Is there any relevent service history? ❍ Yes ✔ No If so, please describe: _____

Has there been any accessory installation ? ❍ Yes ✔ No _____

Is the vehicle used for towing or to carry any cargo or equipment? ❍ Yes ✔ No _____

LOCATION INDICATOR

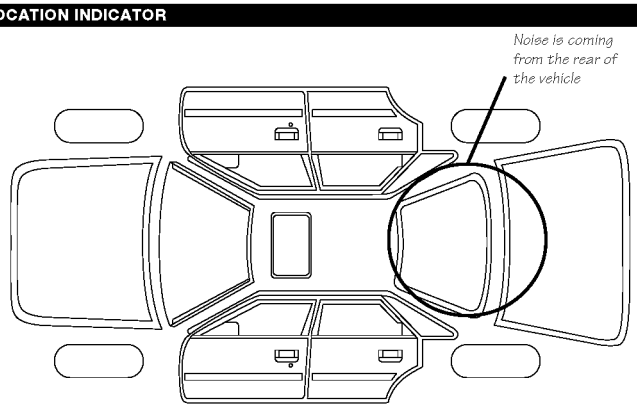

Customer Interview Sheet
Continued

The **conditions section** of the interview sheet is designed to collect data for the following subjects:

- Operating conditions
- Vehicle conditions
- Road conditions
- Weather conditions

Each of these areas have specific conditions to select, which will provide the technician with the details necessary to **duplicate the concern**.

Each area has space provided to record information on unique concerns or conditions that fall outside the parameters outlined in the interview sheet.

The interviewer should cover **all areas** that apply to the concern. **N/A** should be entered in areas that do **not** apply, indicating to the technician that the customer considered the subject and did not over look it.

The customers should be aware of the **key role they play in resolving the concern**.

Vehicle and Operating Conditions

Fig. 2-6

OPERATING CONDITION

When does the condition occur? ❍ Starting ❍ Idling ✔Cruise ✔Coasting ❍ Other _____

Vehicle Speed (MPH): 40-60 mph Engine Speed (RPM): N/A

❍ Cornering Left ❍ Cornering Right ❍ Acceleration ❍ Deceleration

❍ Braking ❍ Clutch Engagement ❍ Other N/A

Accessories: ❍ HVAC ❍ 4WD ❍ Audio ❍ Other N/A

Engine Temperature: ❍ Cold ✔Normal ❍ Hot

Road Conditions: ❍ Highway ❍ Suburb ❍ City

Road Surface: ❍ Asphalt ❍ Dirt/Off Road ❍ Concrete with Expansion Joints

❍ Undulating ❍ Other Irregularities

Explain: N/A

WEATHER CONDITIONS

Temperature: N/A °F ❍ Clear ❍ Rain ❍ Ice/Snow ❍ Wind

❍ Other _____

ADDITIONAL INFORMATION

_____

_____

_____

_____

Summary

At this point in the diagnosis the technician has:

- A completed repair order
- A completed interview sheet
- Verified the concern
- Chosen one of three course of actions

The technician can now proceed with a plan for customer consultation or NVH diagnosis equipped with a **strong background** of the concern.

Case study: Part I

In the LS400 scenario the customer has filled in the customer and vehicle data sections. This has to be reviewed to make sure that it is completely filled out.

*The customer has indicated to the interviewer that he is the **primary driver** and has experienced the concern.*

The NVH data indicates the following areas have been selected during the interview:

Classify

- *Noise other than squeak, rattle or wind noise*
- *Vibration*

*They are both **constant and started gradually**. The vibration is felt in the **steering wheel** and is **rotational**. The sound is heard in the **rear of the vehicle**.*

Operating conditions

- *40 - 60 MPH*
- *Cruise*
- *Coasting*

*It is also important to note that the following data has **not** been selected:*

- *Since new*
- *Vehicle condition section*
- *Road condition section*
- *Engine RPM*
- *Weather condition section*

*The fact that these areas were marked **N/A** indicates that the condition has developed **while in service**, **engine speed does not** effect it and that **it is always there** once the vehicle speed range is reached.*

*For the purposes of this scenario the technician has gone for a short ride with the customer and **has verified** that the concern **does exist** as described.*

*The technician has also chosen the **second option, technician diagnosis and repair**, based on the information and verification available. The technician agrees that an unacceptable condition does*

exist. The customer has indicated that the vehicle has recently developed the condition.

Notes

WORKSHEET #1
Verification of the Customer Concern

Vehicle	Year/Prod. Date	Engine	Transmission

Diagnostic Description: Verify the Concern

It is critical for the technician to **experience** the concern for it to be successfully resolved. The Customer Interview Sheet is a **tool**, used by trained NVH service personnel, to collect the details associated with the customer concern. With the information from the interview the technician can easily **duplicate** the symptom and gain valuable insight for diagnosis.

Your instructor has created **typical NVH conditions** in the shop vehicles. The completion of worksheets 1, 2, 4A and 4B will provide **practice** using the **NVH diagnostic procedures** and **resolve** the conditions on these vehicles. Worksheets 3A, 3B and 3C will provide **experience** using the **NVH Analyzer**.

NOTE Your instructor will also act as the customer providing the information necessary to complete the first step, the customer interview (copy attached).

Customer Interview Sheet

Fig. 2-7

CUSTOMER INTERVIEW SHEET LEXUS

INSTRUCTIONS
The interview should be conducted and the sheet filled out by personnel trained in NVH diagnosis.
Please fill in or check all areas with the appropriate response, enter N/A if it does not apply.
The details collected during the interview are critical in successfully resolving the concern.

CUSTOMER DATA
Name: _____ Date: _____
Telephone #: _____ RO #: _____

VEHICLE DATA
Model/Year: _____ Mileage: _____
VIN #: _____
Is the customer the primary operator of the vehicle? ○ Yes ○ No

NVH DATA
What type of condition is the customer experiencing? ○ Noise ○ Vibration ○ Harshness (ride quality)
Is the condition constant? ○ Constant ○ Intermittent
When did it start? ○ While in Service ○ Since New ○ Gradually ○ Suddenly
○ Other _____

NOISE Describe the Noise: ○ Squeak ○ Rattle ○ Wind Noise
When does the noise seem to be the loudest or most frequent? _____
Mark the location of the noise on the illustration (reverse side of this form).

VIBRATION
Where is it felt:
○ Steering Wheel ○ Floor ○ Seat ○ Instrument Panel
○ Brake Pedal ○ Console ○ Accelerator Pedal
○ Shifter ○ Body ○ Mirrors ○ Clutch Pedal
Describe the vibration:
○ Vertical ○ Horizontal ○ Rotational
○ Other: _____

HARSHNESS (Ride Quality)
Where do you experience it? _____
When do you experience it? _____

Has the vehicle ever been damaged? ○ Yes ○ No If so, please indicate where on the illustration.
Is there any relevent service history? ○ Yes ○ No If so, please describe: _____
Has there been any accessory installation ? ○ Yes ○ No _____
Is the vehicle used for towing or to carry any cargo or equipment? ○ Yes ○ No _____

LOCATION INDICATOR

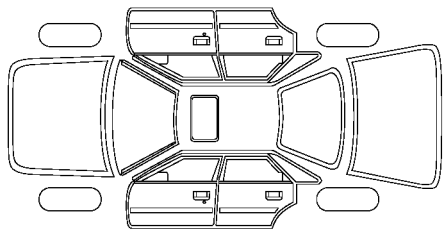

OPERATING CONDITION
When does the condition occur? ○ Starting ○ Idling ○ Cruise ○ Coasting ○ Other _____
Vehicle Speed (MPH): _____ Engine Speed (RPM): _____
○ Cornering Left ○ Cornering Right ○ Acceleration ○ Deceleration
○ Braking ○ Clutch Engagement ○ Other _____
Accessories: ○ HVAC ○ 4WD ○ Audio ○ Other _____
Engine Temperature: ○ Cold ○ Normal ○ Hot
Road Conditions: ○ Highway ○ Suburb ○ City
Road Surface: ○ Asphalt ○ Dirt/Off Road ○ Concrete with Expansion Joints
○ Undulating ○ Other Irregularities
Explain: _____

WEATHER CONDITIONS
Temperature: _____ °F ○ Clear ○ Rain ○ Ice/Snow ○ Wind
○ Other _____

ADDITIONAL INFORMATION
_____
_____
_____
_____

Instructions

1. **Conduct** the customer interview with the customer/instructor by asking **all** the questions on the attached sheet.

2. Your instructor will act like a customer and may not understand the question or the terminology used. Be sure to provide **clarification and explanations** as necessary.

NOTE

You may need to ask probing questions to determine if the customer understands the questions. They may not easily indicate that they don't understand.

The questions asked during this process may prompt the customer to provide additional, valuable information that they may not normally think of as important. You are the NVH expert, not the customer.

It is important that the interview be conducted and the sheet filled out by personnel trained in NVH service. The customers should **not** be left to fill out the sheet on their own. Trained personnel can provide assistance, as necessary, to ensure high quality information about the concern.

3. When the interview is complete, **review** all the data collected and **answer** the following questions. If the review or the following questions identify a lack of information, conduct that portion of the interview again.

4. Take a quick **test drive** with the customer to experience the concern and determine what needs to be done to satisfy the customer.

5. Refer to the **Technician Handbook** for additional information to answer the following questions.

Questions

1. What is the difference between a **test drive** with the customer and a **road test** performed during diagnosis?

_____

_____

_____

_____

_____

2. What is the reason for knowing who is the **primary operator** of the vehicle?

_____

_____

_____

_____

_____

Questions (continued)

3. If the person who brings the vehicle in for service is **not** the primary operator, what is your **plan of action**?

4. What value is it to have **precise vehicle data** when conducting a **road test**? (i.e. year, trans, axle, tire size)

5. What is the **value** of knowing:
   - Service History
   - Damage History
   - Accessory installation

6. If the customer indicates that there **has** been one of the above situations with the vehicle (question #5), what would your **next questions include**? Please list and explain.

   Where would you **record** this information?

Questions (continued)

7. What is the **pitfall** associated with **assuming** the customer **understands the meaning** of NVH terms, such as “harshness”.

8. **When** should the **operating conditions** be determined to maximize a **positive** service experience and why?

9. What information is provided when the interviewer enters **N/A** as an answer?

10. What is the **advantage** to filling in the final details the customer could not answer, during the test drive?

11. What is the **value** of having the interviewer and customer **review and sign** the interview sheet?

Conclusions

1. **List** the information from the interview sheet that is relevant to **resolving** the concern. Briefly explain each.

2. From the information gathered at this point, what **test drive techniques** are necessary to **duplicate** the symptoms? Explain.

3. Based on the information collected from the interview sheet and the test drive, which of the following **course of actions** would you choose and why?
   - Customer Consultation
   - Technician Diagnosis and Repair
   - Technical Assistance for non-serviceable conditions

4. If **customer consultation** is chosen, what is your **plan of action**? Explain.

5. What is the **pitfall** associated with **starting** a diagnosis **before** the verification process is complete?

Notes

CUSTOMER INTERVIEW SHEET

INSTRUCTIONS

The interview should be conducted and the sheet filled out by personnel trained in NVH diagnosis.
Please fill in or check all areas with the appropriate response, enter N/A if it does not apply.
The details collected during the interview are critical in successfully resolving the complaint.

CUSTOMER DATA

Name: _____ Date: _____

Telephone #: _____ RO #: _____

VEHICLE DATA

Model/Year: _____ Mileage: _____

VIN #: _____

Is the customer the primary operator of the vehicle? ❍ Yes ❍ No

NVH DATA

What type of condition is the customer experiencing? ❍ Noise ❍ Vibration ❍ Harshness (ride quality)

Is the condition constant? ❍ Constant ❍ Intermittent

When did it start? ❍ While in Service ❍ Since New ❍ Gradually ❍ Suddenly

❍ Other _____

NOISE

Describe the Noise: ❍ Squeak ❍ Rattle ❍ Wind Noise ❍ Other _____

When does the noise seem to be the loudest or most frequent?

_____

Note here and mark the location of the noise on the illustration (reverse side of this form).

_____

VIBRATION

Where is it felt:

❍ Steering Wheel ❍ Floor ❍ Seat ❍ Instrument Panel
❍ Brake Pedal ❍ Console ❍ Accelerator Pedal
❍ Shifter ❍ Body ❍ Mirrors ❍ Clutch Pedal

Describe the vibration:

❍ Vertical ❍ Horizontal ❍ Rotational
❍ Other: _____

HARSHNESS (Ride Quality)

Where do you experience it? _____

When do you experience it? _____

Has the vehicle ever been damaged? ❍ Yes ❍ No If so, please indicate where on the illustration.

Is there any relevent service history? ❍ Yes ❍ No If so, please describe: _____

Has there been any accessory installation ? ❍ Yes ❍ No _____

Is the vehicle used for towing or to carry any cargo or equipment? ❍ Yes ❍ No _____

LOCATION INDICATOR

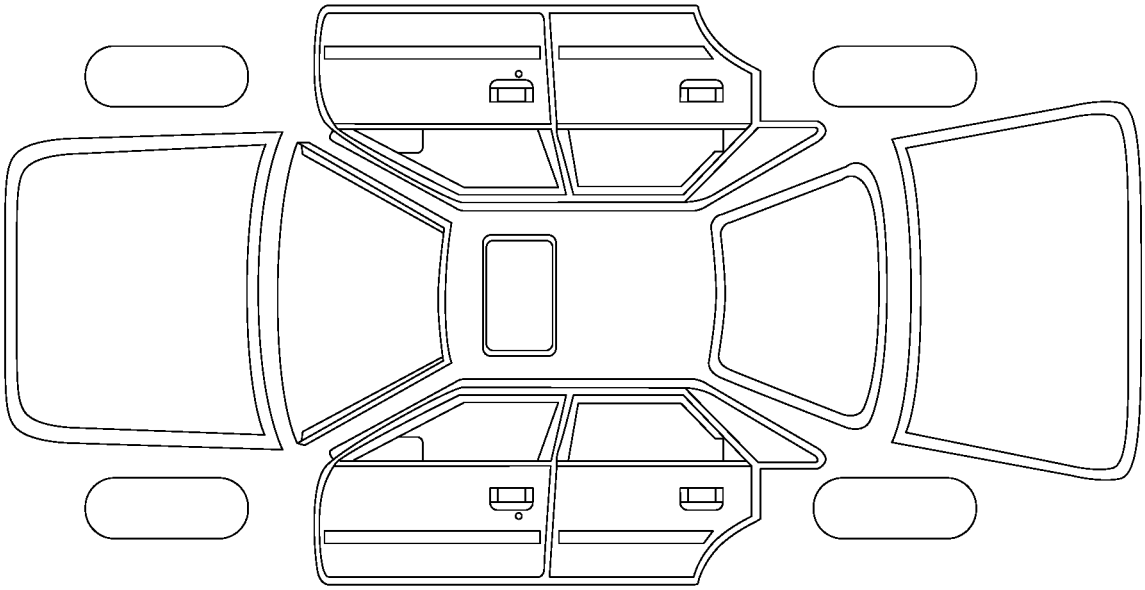

OPERATING CONDITION

When does the condition occur? ❍ Starting ❍ Idling ❍ Cruise ❍ Coasting ❍ Other _____

Vehicle Speed (MPH): _____ Engine Speed (RPM): _____

❍ Cornering Left ❍ Cornering Right ❍ Acceleration ❍ Deceleration

❍ Braking ❍ Clutch Engagement ❍ Other _____

Accessories: ❍ HVAC ❍ 4WD ❍ Audio ❍ Other _____

Engine Temperature: ❍ Cold ❍ Normal ❍ Hot

Road Conditions: ❍ Highway ❍ Suburb ❍ City

Road Surface: ❍ Asphalt ❍ Dirt/Off Road ❍ Concrete with Expansion Joints

❍ Undulating ❍ Other Irregularities

Explain: _____

WEATHER CONDITIONS

Temperature: _____ °F ❍ Clear ❍ Rain ❍ Ice/Snow ❍ Wind

❍ Other _____

ADDITIONAL INFORMATION

_____

_____

_____

_____

Classify the Concern

During diagnosis a technician has to take a **large list** of possible NVH conditions and, through a **process of elimination**, find the one that applies to the situation.

Symptoms Classification Flow Chart

Fig. 2-8

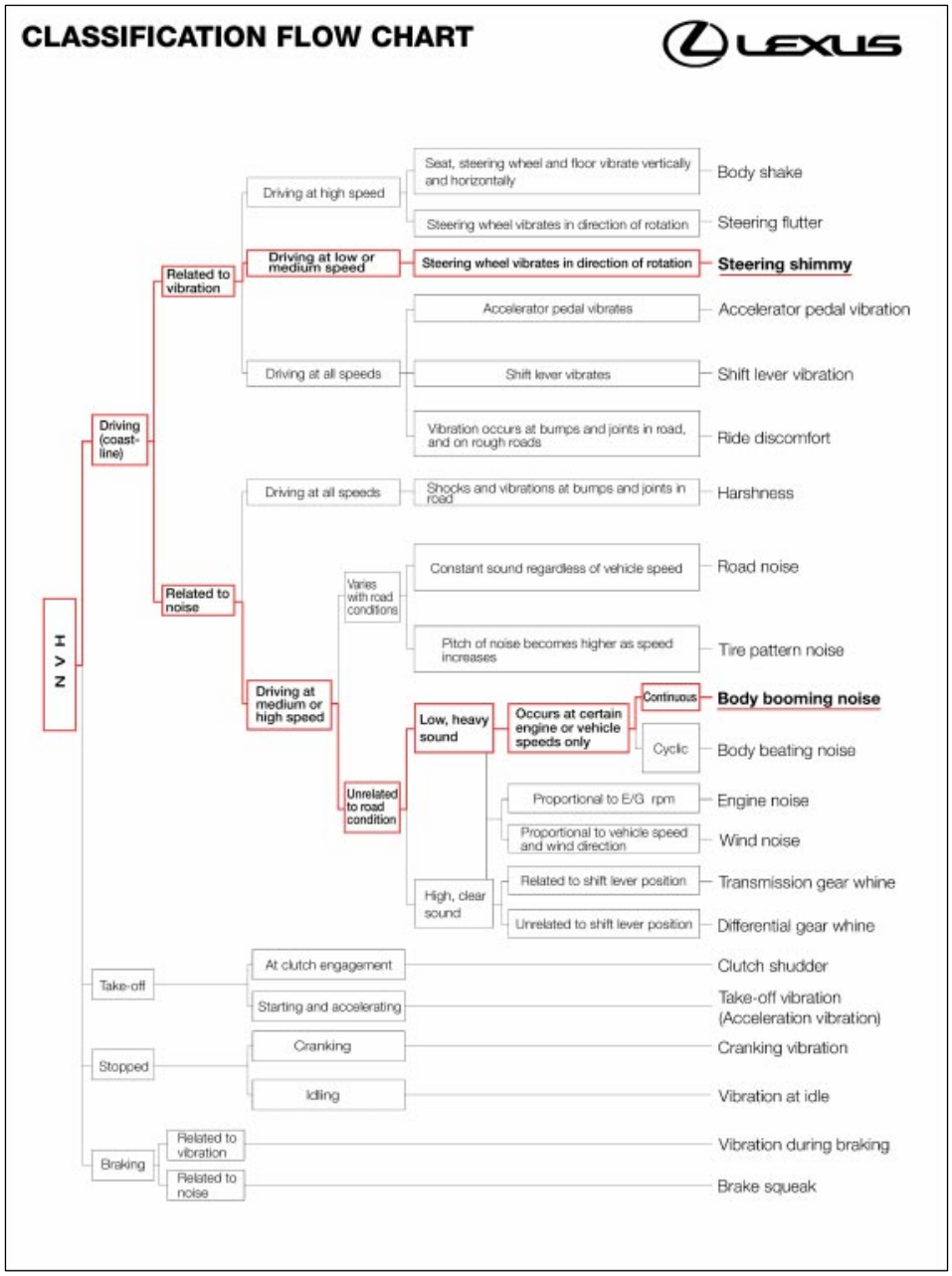

Classify the Concern
Continued

Once the concern has been classified, a specific diagnostic approach can be applied which will identify the source. This **eliminates random diagnosis** resulting in wasted time, confusion and frustration.

A further advantage of this organized style of diagnosis is that it allows the technician to **trace the steps**. The point where a decision was made, which led to a wrong, diagnosis can be identified. **Only the necessary procedures** need to be repeated to successfully find the condition.

Classification is done by collecting information about the concern that is **unique to the condition**. Each step in the process **eliminates possibilities** until there is only one left.

Efficient diagnosis **prioritizes** the procedures that eliminates the largest number of possibilities first. This process will **minimize the number of tests** required and will be less likely to send the technician looking in the wrong direction.

The **four tools** available in the classification process are:

- Customer interview sheet
- Flow chart for classification
- Road test
- NVH Analyzer

With the data collected from the concern verification and interview sheet, the technician can follow a path through the flow chart by making **yes or no decisions** at each level of the chart.

If a decision **can't** be clearly made at a specific point in the chart, then a point has been identified where **more information is needed**, and exactly what that information has to include.

Successful completion of the flow chart will provide the technician with a classification for the symptoms which can be associated with **specific characteristics.** These specific characteristics can only be caused by one area on a vehicle and **pinpoint diagnosis** can be focused on that area for the cause and repair (See Section 1 for the specific characteristics).

WORKSHEET #2
Classify the Concern

Vehicle	Year/Prod. Date	Engine	Transmission

Diagnostic Description: Symptoms Classification Flow Chart

The recent emphasis placed on NVH in automobiles has brought with it a **new vocabulary**. In addition, **quality communication** from the customer to the technician, has been identified as one of the major areas of concern for successful NVH service.

Standardized NVH terminology is very important to ensure that everyone understands the conditions in the same way. The flow chart is a **tool** used by the technician to identify the symptom from the data collected during the interview and the test drive.

When the proper symptom is selected from the list, there are **specific characteristics** associated with the term which are helpful in diagnosis. For example, the **frequency** of the symptom.

Classification Flow Chart

Fig. 2-9

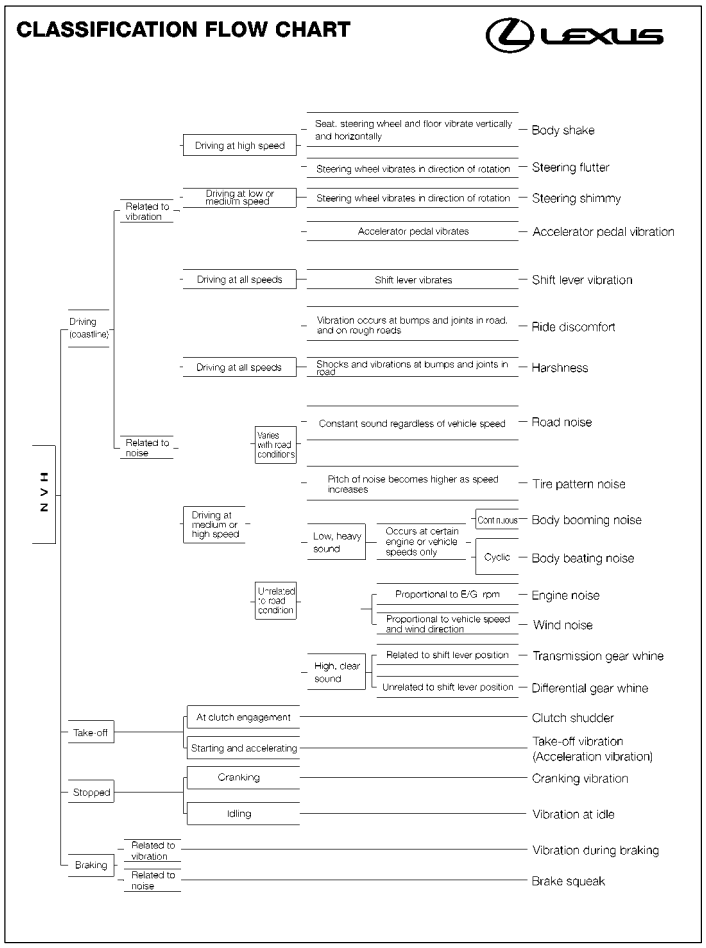

Instructions

As indicated in worksheet #1, this worksheet is the **second** worksheet designed to:

- provide an opportunity to **practice** the NVH diagnostic procedure
- **resolve** the condition placed in the shop vehicles.

1. Use the information collected on the customer interview sheet and the test drive (worksheet #1) to answer the questions at each branch of the flow chart. (attached)

2. If you cannot clearly answer the questions on the sheet then you have identified an area that requires more information. Determine if it has to be collected from the customer/instructor or another test drive.

3. Review the characteristics of each symptom on the symptom chart (Section 1 of the student handbook) and answer the following questions.

Questions

1. **How many** symptoms were identified?

   _____

2. **List** the symptom/s below.

   _____

3. Is the symptom/s noise, vibration, harshness or a combination?

   _____

4. What are the **frequencies** associated with the symptom/s?

   _____

5. Why will **knowing** the frequency be helpful during **diagnosis**?

   _____

   _____

   _____

6. What other things are you familiar with in your daily life which operate at the same frequency? Why is this **helpful** in diagnosis?

   _____

   _____

   _____

   _____

7. Are the symptoms **engine speed** related, **vehicle speed** related or both?

   _____

Questions (continued)

8. What **conditions**, listed on the symptom chart (Section 1) are the **same** as gathered during the interview sheet and the test drive?

   _____

   What **conditions** are **different**?

   _____

9. **List** the possible **causes** from the symptom chart (Section 1) that are most likely in this case. Explain.

   _____

10. What is the **vibrating system** related to the symptom?

    - Vibrating force: _____
    - Resonance system: _____
    - Transmission system: _____
    - Vibrating body: _____

11. Does the vibrating system from the symptoms chart (Section 1) and the one associated with this case **match**?

    _____

12. Remember, not all cases follow a text book situation exactly, the chart serves as a **guide** for most cases.

    What is your **plan of action** in the event that the case being diagnosed is **not** exactly the same as the symptoms outlined in the chart?

    _____

    _____

    _____

Conclusions

The information generated with this flow chart will be used with the customer interview sheet, the NVH analyzer, and the road test to classify the concern and identify the possible source of the vibration or sound. (engine, driveline or wheels)

A successful pinpoint diagnosis can be done with solid background information on the concern.

Notes

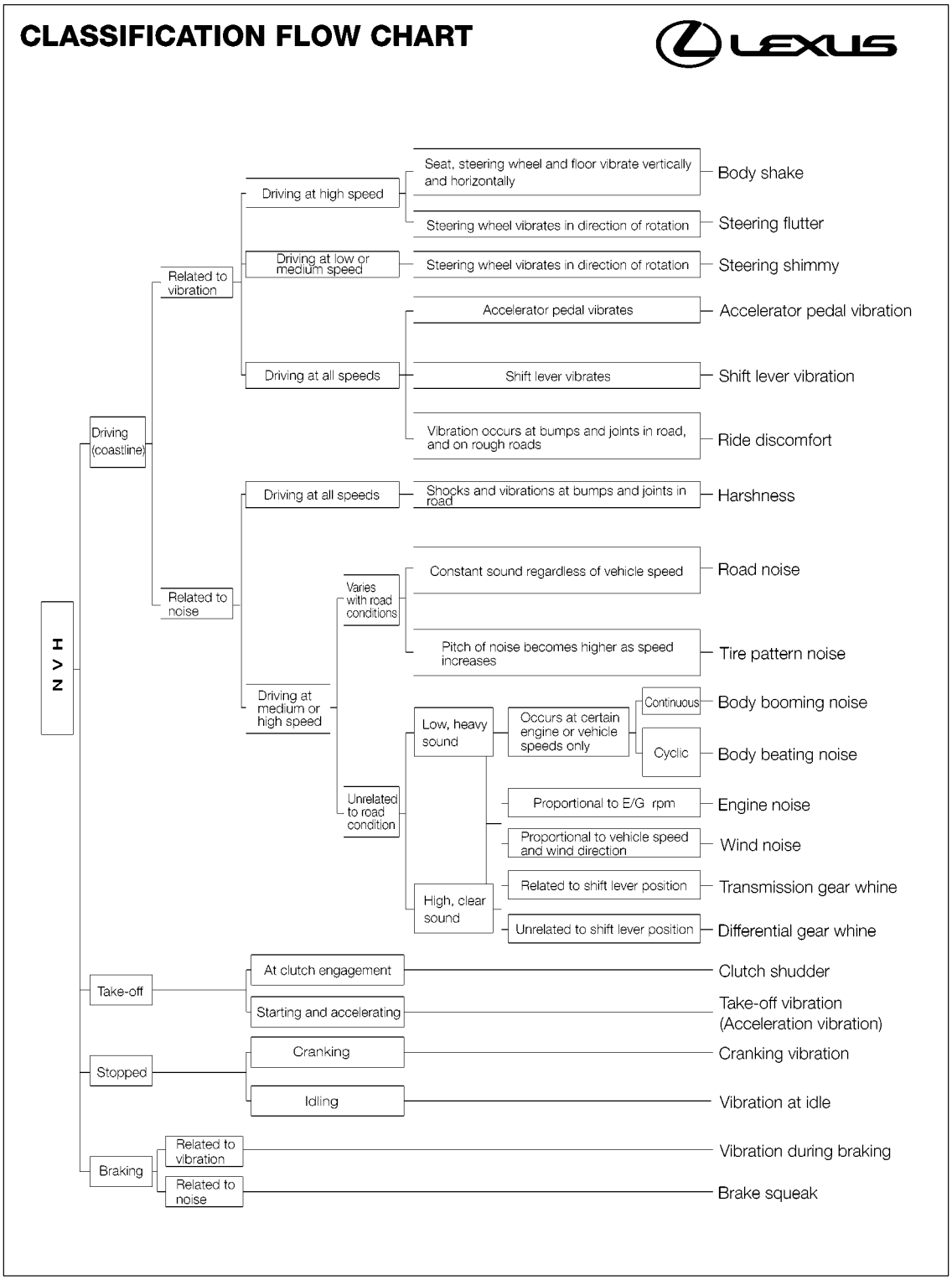
CLASSIFICATION FLOW CHART
LEXUS
N V H
Driving (coastline)
Related to vibration
Driving at high speed
Seat, steering wheel and floor vibrate vertically and horizontally
Body shake
Steering wheel vibrates in direction of rotation
Steering flutter
Driving at low or medium speed
Steering wheel vibrates in direction of rotation
Steering shimmy
Driving at all speeds
Accelerator pedal vibrates
Accelerator pedal vibration
Shift lever vibrates
Shift lever vibration
Vibration occurs at bumps and joints in road, and on rough roads
Ride discomfort
Related to noise
Driving at all speeds
Shocks and vibrations at bumps and joints in road
Harshness
Driving at medium or high speed
Varies with road conditions
Constant sound regardless of vehicle speed
Road noise
Pitch of noise becomes higher as speed increases
Tire pattern noise
Unrelated to road condition
Low, heavy sound
Occurs at certain engine or vehicle speeds only
Continuous
Body booming noise
Cyclic
Body beating noise
High, clear sound
Proportional to E/G rpm
Engine noise
Proportional to vehicle speed and wind direction
Wind noise
Related to shift lever position
Transmission gear whine
Unrelated to shift lever position
Differential gear whine
Take-off
At clutch engagement
Clutch shudder
Starting and accelerating
Take-off vibration (Acceleration vibration)
Stopped
Cranking
Cranking vibration
Idling
Vibration at idle
Braking
Related to vibration
Vibration during braking
Related to noise
Brake squeak

Case study: Part II

After the technician has verified the concern, the classification flow chart is used to establish that there are two areas or classifications, for the symptoms.

- *Steering shimmy*
- *Body booming*

In the first level of the flow chart there are four choices:

- *Driving (coasting)*
- *Take-off*
- *Standing*
- *Braking*

***Driving** was selected because the symptoms occur between 40 - 60 MPH.*

*The second level asks if the symptoms are related to vibration or noise. In this case both areas need to be considered because there is a **vibration** in the steering wheel and a **noise** from the rear of the LS400.*

*The next level under vibration asks for the speed. The vibration is noticed first at about 40 MPH which is considered to be **medium speed.***

*The chart next asks if the steering wheel vibrates in the direction of rotation. The term to describe this symptom is **steering shimmy**.*

*The next level after noise asks for speed. In this case the noise is most noticeable at speeds **above 50 MPH**. Driving at medium or high speed is the choice that best fits the noise symptom.*

*Next, you are asked if the noise varies or is unrelated to road condition. **Unrelated** best fits in this case. The customer noted, and the verification indicated, that the noise is always there once the proper speed is reached.*

*The sound is best described as a **low and heavy sound** as opposed to high clear sound and is related to vehicle speed.*

*The final question relating to noise asks if it is continuous or cyclic. The noise in the LS400 scenario is described as being **continuous** which points to a **body booming** classification for the noise.*

This may seem to be a complex way to arrive at a description of a symptom. But using this process and the flow chart insures that the proper terms are being used and mean the same thing to everyone involved.

In addition, there are very specific causes associated with each of these classifications which help the technician narrow down the list of possibilities. If the wrong term is used it could lead to a pinpoint diagnosis in the wrong area, wasting time.

Road Test

Diagnostic road testing is done **after** the concern has been verified. Customers are helpful in verifying the concern but do **not** need to be part of the complete diagnostic process. Unfortunately, some diagnostic procedures do not separate the verification of the concern from the road test. The road test is designed to help **isolate the condition** after it has been verified. Data collected from a customer and data collected from a road test are different and **serve two different functions**.

During the road test, the technician **duplicates** the concern under several specific operating conditions. This is done to **identify unique characteristics** which will help classify the concern. In addition to duplicating the concern, the technician should try to **change or eliminate** the symptom using techniques such as different speeds, RPM, load or other operating conditions.

Road Test Procedures

Fig. 2-10

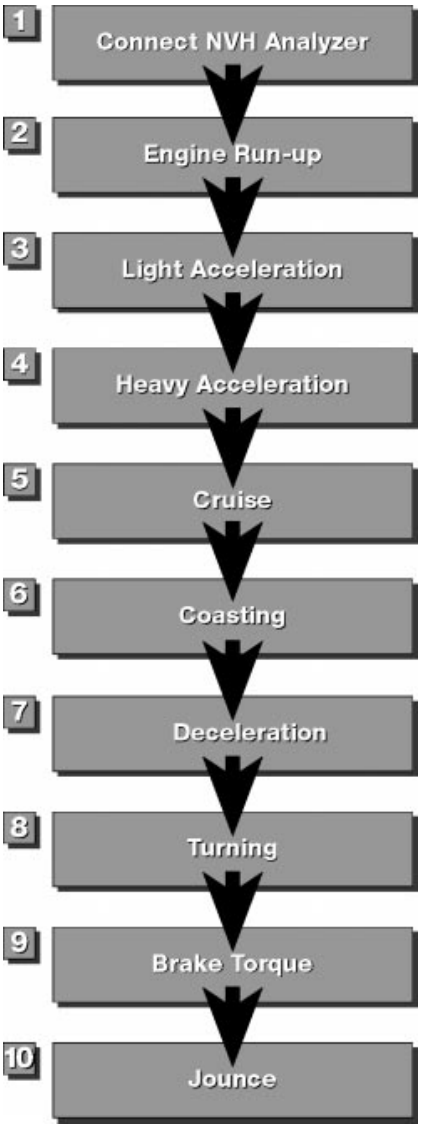

Road Test
Continued

The road test is designed to get the **most** information in the **shortest** amount of time. It is also part of a process of elimination reducing a large list of possibilities to the one causing the concern.

The **condition of the vehicle must not be modified** prior to the road test. A thorough visual inspection may find conditions such as low tire inflation. Properly inflating the tires prior to the road test may modify the vehicle to the point that the symptoms may be effected.

Once the concern has been verified the road test can be **modified specifically to the concern**. Only conditions that apply to the concern need to be duplicated.

For example:

> If the condition occurs at a specific speed then road test parameters that do not apply to that condition do not need to be performed, like engine idle in Neutral or Park.

Collecting, Reading and Analyzing NVH Data

During the road test, the ability to **quantify the frequency and the level** of the vibration or sound is very useful for diagnosis. It also provides an **objective basis for comparison**.

Knowing the **frequency** of the condition will help classify the symptom. The large list of possibilities can be reduced considerably due to the fact that only specific components operate at specific frequencies.

A vibration analyzer, such as the **Lexus NVH Analyzer,** can measure the level of a specific frequency vibration or sound. This level can be recorded and compared to known good vehicles as well as the concern vehicle, after the repair has been performed.

If a frequency analyzer is not available, experience with **known vibrations** is helpful in diagnosis. This approach, however, is very subjective when comparing levels of noise or vibration (See Section 1 for details).

NVH Analyzer

Fig. 2-11

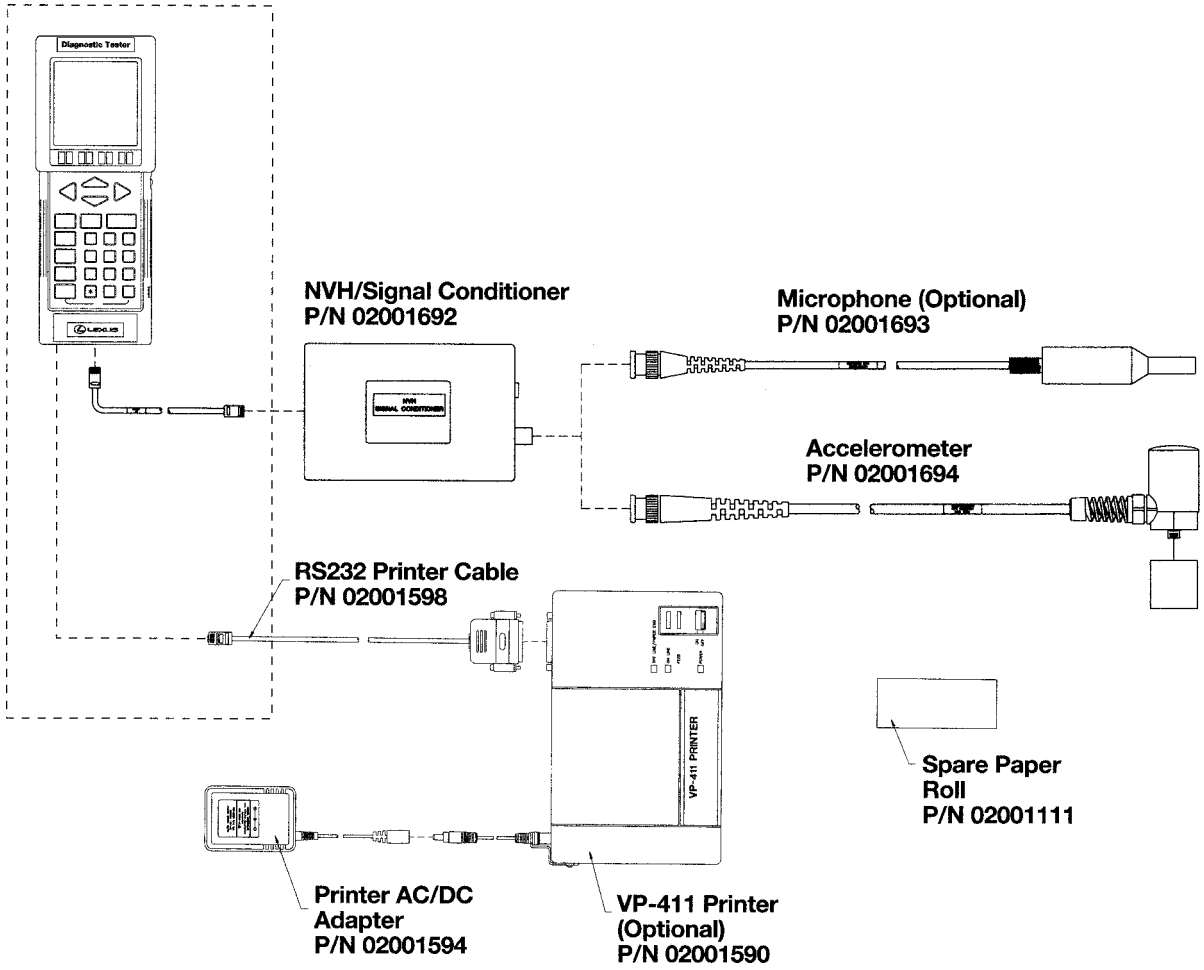

Collecting, Reading and Analyzing NVH Data
Continued

The Diagnostic tool set includes an extensive **Operator's Manual** with **operating instructions** for each program card. These references provide an excellent resource for the following information:

- Hardware
- Features
- Operating precautions
- Getting started
- Using the RS232 and instrumentation ports

The appendices provide valuable additional information to help the operator get the most out of the Diagnostic Tool Set (See operator's manual table of contents).

The operating instructions provide details on the NVH Analyzer functionality. When one of the program cards is selected, the instructions will walk the operator through the menu selections and key strokes until the appropriate data is displayed. It will also explain how to move through the different displays, modify the displays and how to pause or snapshot the data. **Interpreting the data is left to the technician**.

Lexus Diagnostic Tool Set Manual

Fig. 2-11b

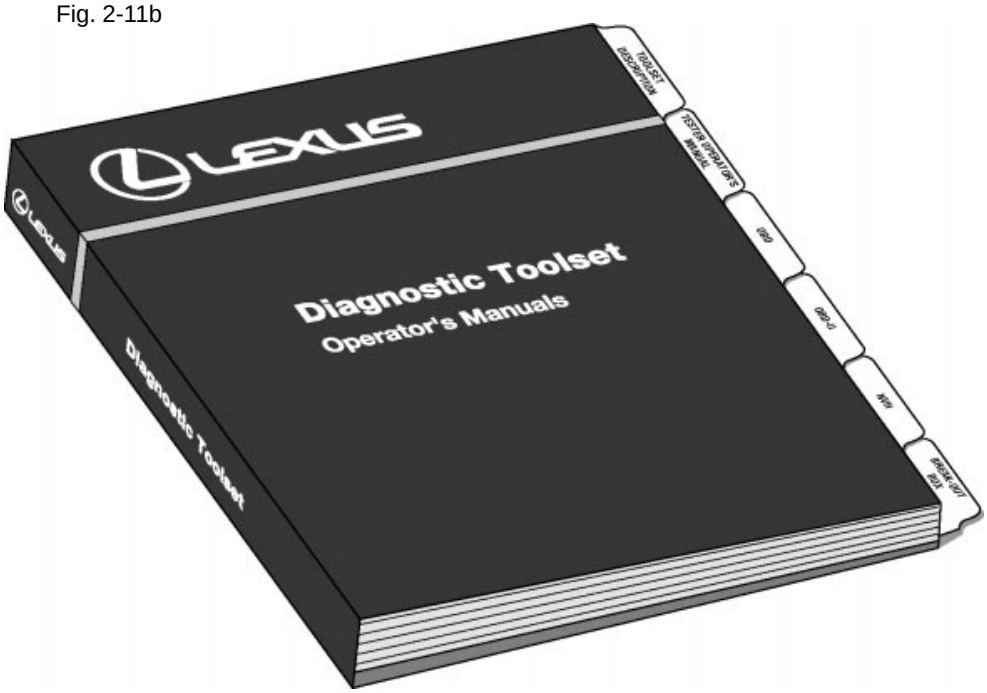

WORKSHEET #3A
Getting Started with the NVH Analyzer

Description: **The NVH Analyzer Set-up**

The NVH Analyzer is designed to be very **user friendly**, with the **minimal** menu selections required to select the vehicle and access the data displays.

This worksheet is designed to orient you to the **NVH menus** and the **active keys** on the analyzer.

Lexus Diagnostic Tester

Fig. 2-12

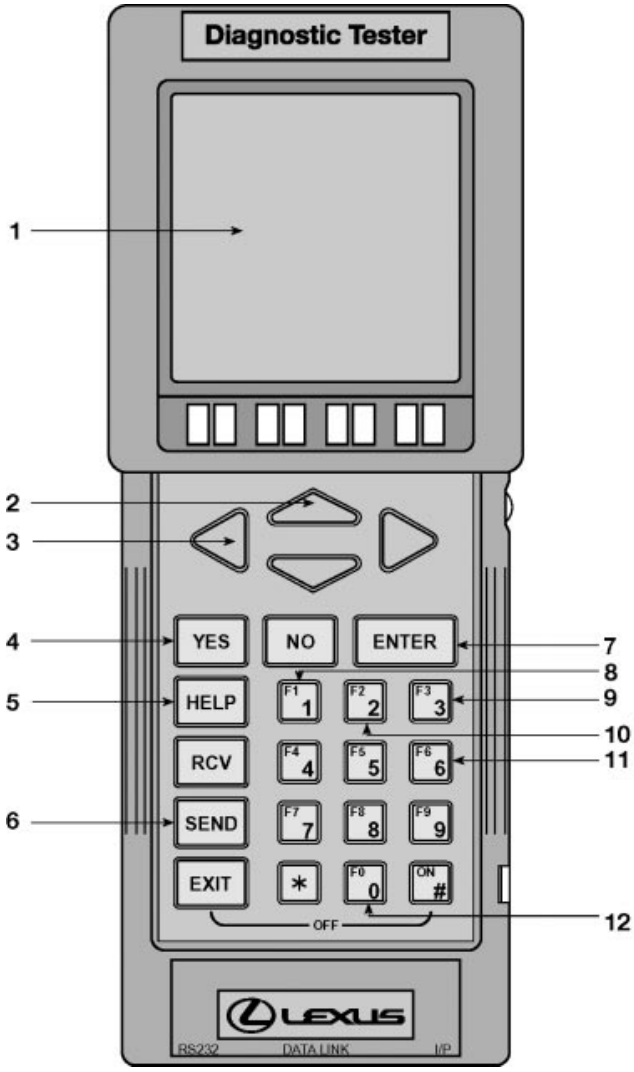

1. Display
2. ⌃ and ⌄ arrows move the cursor on the menu screens or changes amplitude on the display screens
3. ◁ and ▷ arrow move the cursor on all screens and displays
4. YES key changes the company on the program ID screen
5. HELP displays a summary of active keys
6. SEND with # will print the screen
7. ENTER moves forward through the menu
8. F1 1 key changes NVH displays
9. F3 3 key changes the source indicators
10. F2 2 key changes frequency band width
11. F6 6 key saves a paused screen
12. F0 0 key pauses the display

Instructions

1. **Install** the NVH Training Software card.

2. Refer to the NVH section of the Diagnostic Tool Set **Operator's Manual** (Sections 1.0 - 3.0) and follow the procedures outlined to familiarize yourself with the operators manual, menu structure, active keys, and functions.

   - 1.0 Getting Ready
   - 2.0 Vehicle and System Selection
   - 3.0 NVH Main Menu

3. Press the HELP key frequently to familiarize yourself with the **help information** available in the software. Use the EXIT key to return to the menu or data displays.

4. Perform the **selection procedures** on the following vehicles and note the different selections required to access the NVH data displays.

   - 93 LS400
   - 93 SC400
   - 91 ES250

5. **Repeat** a vehicle selection from above using the "LAST VEHICLE" selection. **Note** the menus eliminated using this selection compared to the "NEW VEHICLE" selection.

NOTE An auxiliary power source is recommended during this worksheet to avoid interruptions from a dead battery. (Refer to the operators manual section, "Powering the Diagnostic Tester")

Questions

1. Which key moves **forward** through the menu structure?

   _____

2. Which key moves **back** through the menu structure?

   _____

3. What are the **two ways** to select "NVH" on the Function Select Menu?

   _____

4. What is the **purpose** of selecting the vehicle **specific** year, engine, transmission, etc.?

   _____

5. What effect will the **wrong** vehicle or vehicle parameters selection have on **diagnosis**? How will you know?

   _____

   _____

6. What is the **advantage** to using the "LAST VEHICLE" selection when possible?

   _____

Questions (continued)

7. List the resources available to **verify** the vehicle axle ratio.

_____

8. Under what conditions would the axle ratio need to be **changed**? Be specific.

_____

_____

9. List **three** useful pieces of information available on the vehicles parameters screen. Explain.

_____

_____

_____

10. Does the tool tell you where to connect the **data link cable** on the vehicle selected?

    If so, which screen?

_____

11. What is your **plan of action** if you get the “NVH Signal Conditioner Failure” screen? Explain.

_____

12. What is the printer “Baud Rate” **default** value? _____

    Where did you find the answer?

_____

_____

13. How many **unit conversions** can be modified?

    List the ones applicable to NVH.

_____

14. What **type** of information is available through “help”?

_____

Notes

WORKSHEET #3B
Getting Started with the NVH Analyzer

Description: **The NVH Analyzer Data Displays**

The NVH software provides **three data displays** for NVH diagnosis.

- 2d (2 dimensional)
- Barchart
- 3d (3 dimensional)

These displays are available to **analyze** the vibrations and noise in a vehicle. They are accessed after the vehicle and function selections are made. (worksheet #3A) In addition to the vehicle vibrations, each display provides information including:

- Vibration indicator arrows
- MPH & RPM
- Time
- Frequency and amplitude

This worksheet is designed to review each of the displays in detail for the **information available** and the **key strokes** necessary to **manipulate** the information.

2d Display

Fig. 2-13

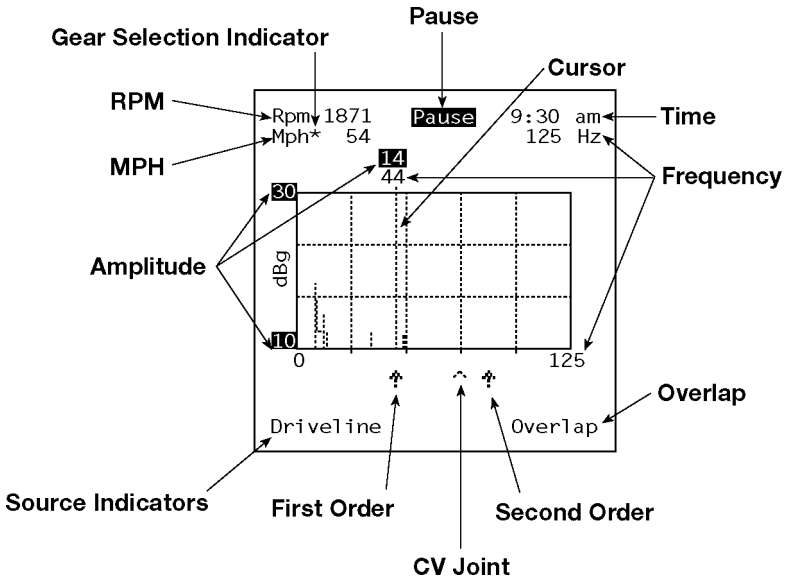

Instructions

1. Install the NVH training software card.
2. Perform the **set-up procedures** outlined in the NVH section of the operator's manual (Sections 1.0 - 3.0).
   - 93 LS400
   - 93 GS300
   - 93 ES300
3. Refer to **Sections 4.0 - 6.0** for details relating to each of the displays and functions.
   - 4.0 NVH Displays
   - 5.0 Pause Mode
   - 6.0 Data Record
4. **Practice manipulating** the displays with the active keys to learn the range and function of the data available for diagnosis.

Questions

1. What do the two axises represent on the 2d display?
   - Vertical
   - Horizontal

   _____

2. What are the **active keys** on the 2d display that change the:
   - Amplitude
   - Frequency (for each direction)
   - Source indicator (engine, driveline and wheel)
   - Cursor

   _____

3. **How many** ranges or bands are available for:
   - Amplitude
   - Frequency

   _____

4. If the time is **not** correct how is it **changed**?

   _____

5. What is the value of the **time indicator** on the display or a screen print?

   _____

   _____

Questions (continued)

6. If the “no data” indicator is displayed adjacent to the MPH and RPM indicators, what is your **plan of action**? Explain.

_____

7. If the vehicle requires a manual gear selection, how is it **indicated** on the display?

_____

8. What is the key to enter the **gear selection** display?

_____

9. What is the key required to **change** the vibration source indicators (selected component)?

_____

10. **Why** do some vehicles require gear selection while others do **not**?

_____

_____

11. What is the **default** gear selection if none is selected?

_____

12. What **effect** will using the default gear position have in diagnosis?

_____

_____

13. Which active key **changes** the three NVH Data displays?

_____

14. **How many events** are displayed on the barchart and 3d display?

_____

15. Which line is the **most recent event** on both the:

- barchart
- 3d display

_____

Questions (continued)

16. On the **barchart** display, is the total dBg displayed:

    A. the sum of the engine, driveline, and wheel dBs

    B. or the greatest level of total vibration felt in the vehicle (engine, driveline, and wheel levels are compared to the total)

    _____

17. How do you change the **amplitude scale factor** on the barchart display?

    What is the range?

    _____

18. What is the function of the **RCV** key?

    _____

WORKSHEET #3C
Getting Started with the NVH Analyzer

Description: **NVH Data Analysis**

NVH data analysis is the **key** to using the NVH Analyzer in the diagnostic process. The ability to **accurately identify** the “spikes” associated with the vibration, causing the customer concern, will contribute to your success and customer satisfaction.

The NVH training simulation software contains pre-recorded vehicles with **typical vibration characteristics** and **customer concern vibrations**. Specific scenarios are selected by choosing one of the following vehicles on the vehicle select screen.

- 93 LS400 STREAM 31
- 93 LS400 STREAM 75
- 93 LS400 STREAM 77
- 93 ES300 STREAM 34
- 93 ES300 STREAM 74
- 93 SC30 STREAM 32

The NVH data analysis worksheet is designed to utilize the NVH training software to provide **practice analyzing vibrations**. The software allows this activity to take place in the classroom where everyone can benefit from the same scenarios, discussions and direction from the instructor.

2d Display

Fig. 2-14

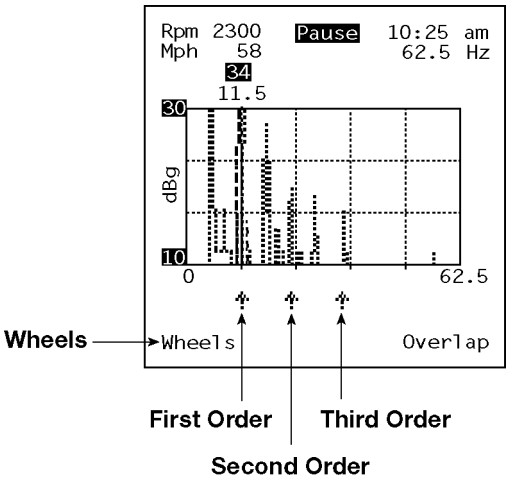

Instructions

1. **Install** the NVH training simulation software and go through the function and **vehicle selection menus**. Use the skills developed in worksheet #3A.

NOTE

Follow the directions from your instructor in selecting the vehicles. The directions will include details from the **customer interview sheet** and the **symptoms classification flow chart**.

2. **Observe** the data displayed on each of the three displays. Use the skills developed in worksheet #3B to **manipulate** the screens to observe the **clearest view** of the data.

For example:

Changing the amplitude to a higher scale may eliminate vibrations that are normal. Changing the frequency range may make low frequency wheel vibrations easier to read.

NOTE

The scenarios were recorded for the length of time required to capture a **representative sample**. The software will display the data in a **continuous loop**. **Watch** the RPM and MPH indicators to determine the beginning of the loop.

3. Select each of the three source indicators and **identify the spikes** above each arrow on the 2d and 3d displays.

4. **Compare** what is indicated on the 2d and 3d displays to the data indicated on the barchart display.

5. When you have **identified** the spike that is associated with the symptom perform a **save and screen print** of all the displays. Attach to the sheet provided.

6. **Formulate a plan** for a thorough **road test** that you would perform to determine if your conclusions are correct. Base the plan on the information from:

   - the customer interview sheet
   - the symptoms classification flow chart
   - the data viewed in the scenario

   Place your answer in the space provided on the attached sheet.

NOTE

The ability to **anticipate** what spikes you should find is very helpful in diagnosis. It makes it easier and more efficient to plan the display manipulations and the road test.

7. Answer the questions as you review the scenarios and place your answers for 1-10 on the **chart** (attached).

Questions

1. Based on the information from the customer interview and the symptom classification, indicate what **type of vibration** you **expect** to see on the display prior to reviewing the NVH data.

• engine	1st order	2nd order	3rd order	4th order
• driveline	1st order	2nd order	3rd order	4th order
• wheels	1st order	2nd order	3rd order	4th order

Questions (continued)

2. Observing the spikes in question, what **frequency range** would best display the spikes? Explain.

3. While viewing data on the 2d display, are there any spikes shown at frequencies **greater** then 125 Hz?

4. What **amplitude range** will clearly display the larger spikes and eliminate the normal vibrations?

5. Which scenarios indicate an **overlap** condition?

6. Which **indicators** are overlapping?

7. What would your **plan of action** be for a road test to determine which **source** was causing the spike? Be specific.

8. Which source shows the greatest level of **energy** on the **barchart** display?

9. **After reviewing** the displays which are the vibrations of **concern**?

10. What are your **conclusions** and **plan of action** from the symptom information and NVH data on this vehicle?

Conclusion

1. Why were the three sources of vibration (engine, driveline and wheel) **selected** for indication by the NVH Analyzer?

2. When is a **comparison of amplitude level** from vehicle to vehicle of little value?

3. What is the value of **recording** the amplitude level of the vibration causing the concern **before** the repair?

4. How do you **obtain** the **exact** frequency and amplitude of any spike displayed?

5. What is your **plan** if you find a significantly large spike that is **not** over an arrow?

6. What type of vibrations and sounds are the technician **expected** to repair? Give examples.

   Explain.

7. What type of vibrations and sounds are **beyond the scope** of the technician? Give examples.

   Explain.

Questions (continued)

8. What is the value of the **diagnostic procedures** and the **NVH Analyzer** when dealing with vibrations that require assistance?

9. **List** the information necessary prior to calling for assistance.

10. On the Stored Data Blocks screen which is the **most current** stored data and where is the **default** position of the cursor?

11. **How many** data blocks can be stored?

    What are the **active keys** required to store data?

12. What happens if you hit ENTER to save **paused** data and the all the **blocks are full**?

13. **When** do you get the “Review Old Data” screen?

    Under what **conditions** does it appear?

14. What are the **two ways** to delete data saved?

15. What is missing when analyzing data on the training software compared to analyzing data during the Road Test?

QUESTION / VEHICLE	1. ANTICIPATED VIBRATION SOURCE/ORDER	2. BEST FREQUENCY RANGE	3. “SPIKES” ABOVE 125 Hz YES/NO	4. BEST AMPLITUDE RANGE
LS400 A (31)	/	Hz	Hz YES/NO	dBg
LS400 B (75)	/	Hz	Hz YES/NO	dBg
LS400 C (77)	/	Hz	Hz YES/NO	dBg
ES300 A (34)	/	Hz	Hz YES/NO	dBg
ES300 B (74)	/	Hz	Hz YES/NO	dBg
SC300 (32)	/	Hz	Hz YES/NO	dBg

	SYMPTOM 1
LS400 A (31)	
LS400 B (75)	
LS400 C (77)	
ES300 A (34)	
ES300 B (74)	
SC300 (32)	

5. OVERLAP YES/NO 6. INDICATORS 7. PLAN OF ACTION	8. BARCHART LEVEL	9. ACTUAL VIBRATIONS SOURCE/ORDER	10. CONCLUSIONS PLAN OF ACTION
YES/NO	ENGINE DRIVELINE WHEELS		
YES/NO	ENGINE DRIVELINE WHEELS		
YES/NO	ENGINE DRIVELINE WHEELS		
YES/NO	ENGINE DRIVELINE WHEELS		
YES/NO	ENGINE DRIVELINE WHEELS		
YES/NO	ENGINE DRIVELINE WHEELS		

SYMPTOM 2

2D	BARCHART	3D
LS400 A (31)		
ATTACH SCREEN PRINT HERE	ATTACH SCREEN PRINT HERE	ATTACH SCREEN PRINT HERE
COMMENTS		
LS400 B (75)		
ATTACH SCREEN PRINT HERE	ATTACH SCREEN PRINT HERE	ATTACH SCREEN PRINT HERE
COMMENTS		
LS400 C (77)		
ATTACH SCREEN PRINT HERE	ATTACH SCREEN PRINT HERE	ATTACH SCREEN PRINT HERE
COMMENTS		

2D	BARCHART	3D
ES300 A (34)		
ATTACH SCREEN PRINT HERE	ATTACH SCREEN PRINT HERE	ATTACH SCREEN PRINT HERE
COMMENTS		
ES300 B (74)		
ATTACH SCREEN PRINT HERE	ATTACH SCREEN PRINT HERE	ATTACH SCREEN PRINT HERE
COMMENTS		
SC300 (32)		
ATTACH SCREEN PRINT HERE	ATTACH SCREEN PRINT HERE	ATTACH SCREEN PRINT HERE
COMMENTS		

Notes

WORKSHEET #3D
Dynamic NVH Data Analysis

Diagnostic Description: **Dynamic NVH Data Analysis**

The NVH training software used in worksheets #3A, #3B, and #3C provide excellent classroom training to **introduce** and **develop** basic skills with the NVH Analyzer.

This worksheet is designed to add the dynamic element of **sensing** the vibration or noise while analyzing the NVH data. Sensing the symptom while viewing the data develops the **relationship** between the vibration or noise and the spikes. The ability to make this relationship is **key** to duplicating and manipulating the symptom which will make diagnosis **easier**.

Instructions

1. **Install** the NVH/BREAK-OUT BOX Program Card.
2. Connect the **Data Link Cable** and the **Accelerometer** to the vehicle set up in the shop, using the Operator's Manual.
3. **Review** the information from the Customer Interview Sheet and the Classification Flow Chart for the vehicle selected.
4. Use the skills gained in worksheet #3C to **anticipate** and **develop a plan** to analyze the data.
5. With the help of the instructor **confirm** the customer concern in the vehicle set up in the shop.
6. **Analyze** the data while duplicating and manipulating the symptom, **save** and **print** a representative sample of each display. Attach to the sheet provided.
7. Based on the concern information and the NVH data analysis, **develop a plan** for a pinpoint diagnosis.
8. **Remove** the "bug" and **retest** the vehicle to **confirm** the "repair". Attach a screen print to sheet provided.

Questions

1. What are your **conclusions** from the NVH data analysis for developing a pinpoint diagnosis plan?

   _____

   _____

   _____

2. **List** the advantages of being able to **sense** the vibration or noise while analyzing the NVH data.

   _____

   _____

   _____

Questions (continued)

3. How does sensing the symptoms make the diagnosis **more efficient** than simply viewing the data in worksheet #3C?

4. After the “bugs” were identified would you have come to the **same** conclusions or a pinpoint diagnostic plan in question #1? Explain.

Notes

2D	BARCHART	3D
BEFORE		
ATTACH SCREEN PRINT HERE	ATTACH SCREEN PRINT HERE	ATTACH SCREEN PRINT HERE
AFTER		
ATTACH SCREEN PRINT HERE	ATTACH SCREEN PRINT HERE	ATTACH SCREEN PRINT HERE
COMMENTS		

Diagnostic Display Interpretation Hints

"VIBRATION" function

Learning to associate the NVH data with vehicle vibrations takes **practice** and an **understanding** of how the different displays provide information. It is also helpful to understand how the displays can be compared to one another to isolate the data that relates to the concern.

NVH Analyzer Displays

Fig. 2-15

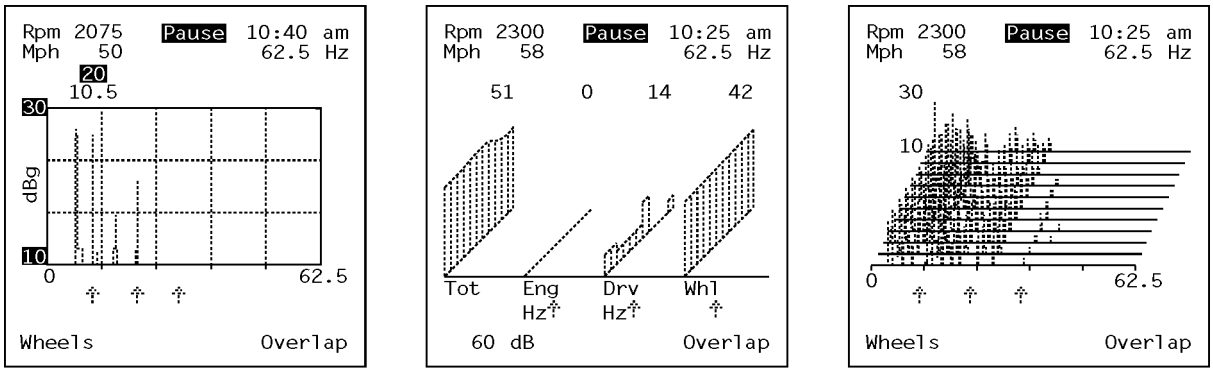

2d **BARCHART** **3d**

"VIBRATION" function
Continued

The **road test techniques** are also valuable when using an NVH analyzer while trying to isolate a concern. Duplicating and controlling the symptoms during a road test can help identify specific data that responds in the same way as the symptom.

For safety reasons, the **pause and save** (F0 0 F6 6) features are helpful to store and review the data after the road test. It is very difficult to safely operate the vehicle and analyze data at the same time. A second person to operate the vehicle is also useful during a road test, especially if the vibration is intermittent.

For example:

> The **2d display** (which is a **two dimensional display** that plots the vibrations according to frequency and amplitude) is useful during the test drive of an engine vibration. The driver can shift the vehicle into neutral and coast while the technician watches or records the vibrations. The spikes on the display that are related to the engine should go away while the spikes that are related to the driveline or wheels should remain.

The **barchart display** is a three dimensional display that shows eleven samples of data, plotting the amount of energy of the vibrations in the three source groups:

- Engine
- Driveline
- Wheels and tires

The barchart display makes an excellent **starting point** for diagnosis. It is very helpful to determine where the most amount of energy is generated or how the energy is distributed.

A technician can decide which of the above areas to focus on when moving to the 2d or the 3d displays for more specific analysis of the vibrations.

For example:

While test driving a vehicle, the barchart display may show the majority of the energy in the area of the driveline. The technician can now switch to the 2d display (F1 1), select the driveline indicators (F3 3), and look for large spikes that fall above the driveline arrows. Large spikes would indicate vibrations that would generate the high energy levels on the bar chart display.

"VIBRATION" function
Continued

A large spike above a **driveline arrow** would confirm a driveline condition. The amplitude level can be **documented** for future reference. A technician can now focus the diagnosis in the driveline area.

The NVH Analyzer is designed to do the math required to associate a specific frequency vibration with one of the three groups listed above. It displays this by providing the terms "engine", "driveline" or "wheels" on the display and arrows for various order vibrations. These arrows are placed below the display pointing to the associated frequencies. A "^" is used to depict the CV joint frequency when checking driveline vibrations.

2d Display Indicators

Fig. 2-16

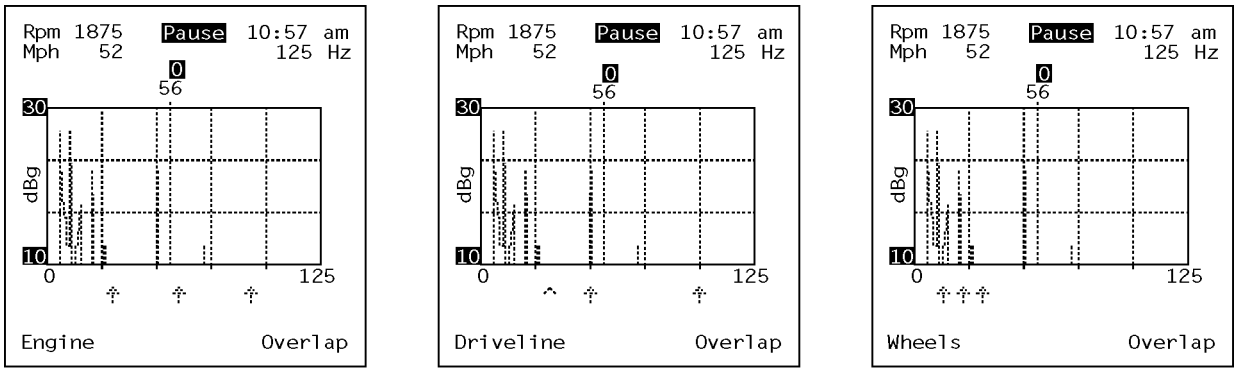

ENGINE **DRIVELINE** **WHEELS**

"VIBRATION" function
Continued

NOTE

When using the NVH Analyzer it is very important that the **vehicle parameters be verified** for the vehicle being tested. Every effort has been made to provide an accurate data base but there are many variables and combinations involved with our vehicles.

Vehicle Parameters Menu

Fig. 2-17

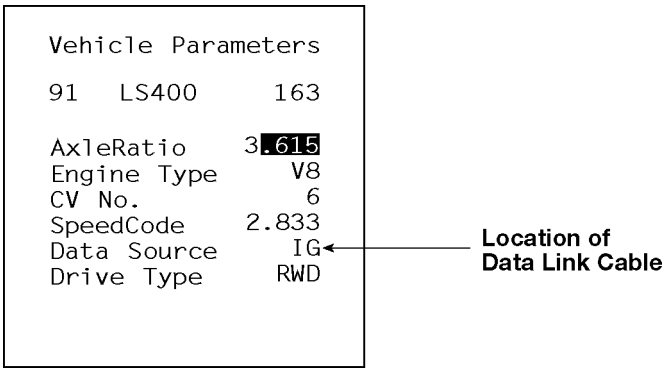

Sticker on "B" Pillar

Fig. 2-18

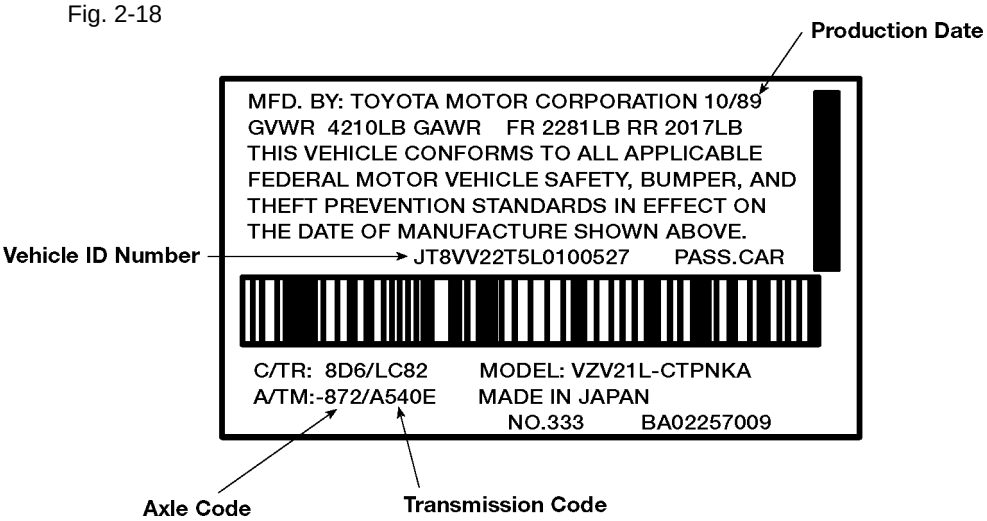

"VIBRATION" function
Continued

It is possible to have a unique situation that requires research in the Repair Manuals, parts fiche, TSBs and NCFs to collect the specifications necessary to modify the data base.

When the data base is accurate, the arrows will properly line up with engine, driveline and wheel vibrations.

An **LED will light** and **"overlap"** will flash when there is a possible overlap situation. This indicates that **more then one source** needs to be considered for a vibration displayed on the screen. The arrow will also flash indicating which spike could be caused by more than one source.

Overlap/LEDs Indicators

Fig. 2-19

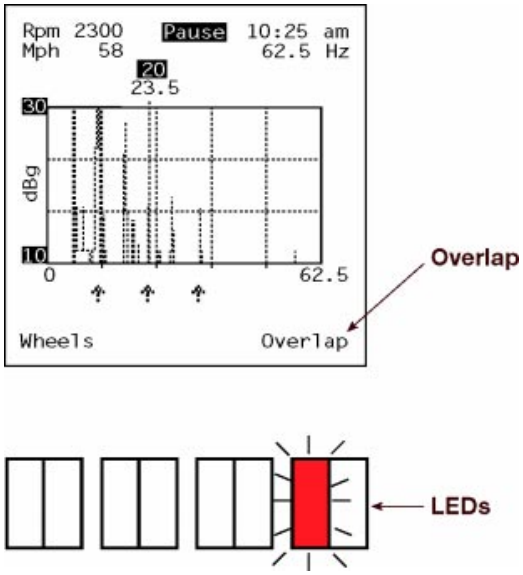

For example:

When a vehicle is operating in fourth gear on a manual transmission it is possible for the gear ratio to be 1:1. The engine speed and the driveline speed are the same in this case, therefore an overlap could occur with a vibration generated by either area.

In this case an LED will light warning the technician of the overlap condition. The technician would view the other two groups (F3 3) to identify the overlap. This is done by finding the spike that has an arrow pointing to it in more than one area (engine, driveline, wheels).

In this example, the technician could select a different gear or step on the clutch to make the engine and driveline RPM different. This would isolate the vibration to a specific source.

"VIBRATION" function
Continued

The **3d display** provides a three dimensional (3d) view of the vibrations in a vehicle by displaying 11 spectral lines (2d) which provides **a brief history of the vibrations**. Each of the **eleven lines** is the same as one 2d line, showing frequency and amplitude. By stacking them, a technician can easily observe **changes** in the spikes as the symptom changes.

This is helpful when road testing a vehicle with a difficult condition to diagnosis. When the technician modifies the operating conditions of the vehicle, while trying to control the symptoms, the 3d display will show changes in the spike related to the concern. Observing which spike changes as the symptom changes can identify the area causing the condition by looking at the arrow associated with that spike.

3d Display

Fig. 2-20

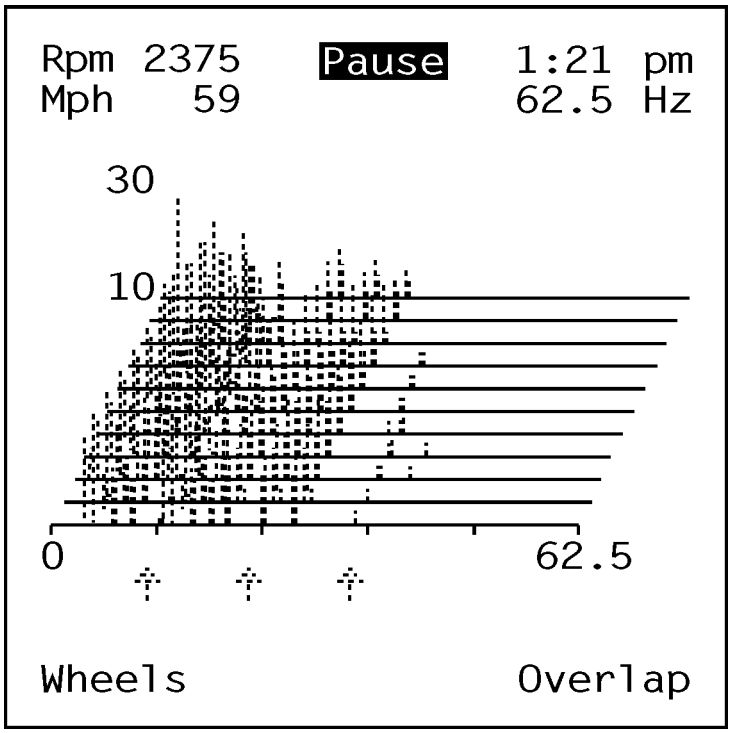

"VIBRATION" function
Continued

For example:

> If you watch the normal engine firing vibrations on the 3d display, you will note a variation in the amplitude of the vibration due to power fluctuations of the engine. The power fluctuations are caused by changes in the air/fuel ratio in a normal feedback system.

Each of the displays can be changed to customize the parameters and focus in on a sample. These features allow the technician to eliminate data that is not applicable and provide a clearer view of the data that is relevant to the condition.

The parameters can be changed in the following way:

- Frequency band width ([F2 2]) forward & ([*] [F2 2]) backward
- Floor and ceiling level of the amplitude scale (⇕)
- Engine, driveline and wheel indicators ([F3 3])

Frequency band width is adjustable to the following four ranges using the [F2 2] key:

- 0 - 500 Hz
- 0 - 250 Hz
- 0 - 125 Hz
- 0 - 62.5 Hz

The frequency band width **defaults to the 125 Hz scale** when the display is first selected from the vehicle parameters menu. Once in the display, if a different scale is selected, then it remains at that level as other displays are selected.

The scale selected is shown in **two places** on the 2d and 3d display as shown in fig. **2-21** and in the **upper right corner** of the barchart display.

The advantage of starting with the 125 Hz scale is that it gives a **clear view** of the spikes most likely generated by a vehicle. Once a spike or range has been identified, the appropriate band width can be selected using the [F2 2] key. If the default is set at a smaller frequency band then a spike outside that range may be overlooked. A quick check of the 500 Hz scale will reveal any spikes that may appear above the default setting.

If there is an indicator arrow outside the frequency band selected, there will be a **flashing LED and frequency indicator** to warn the technician to check a larger frequency range for possible spikes.

"VIBRATION" function
Continued

The **floor and ceiling level of the amplitude scale** is adjustable from the **default position of 10 to 30 dBg** range with the ⬍ keys. The following ranges are available:

- 0 - 20 dBg
- 10 - 30 dBg
- 20 - 40 dBg
- 30 - 50 dBg
- 40 - 60 dBg

The advantage of moving the amplitude window is to **drop out of view spikes that are normal** in a particular vehicle, leaving the larger amplitude spikes for analysis. The display becomes less confusing and easier to interpret.

Default Settings for Frequency and Amplitude

Fig. 2-21

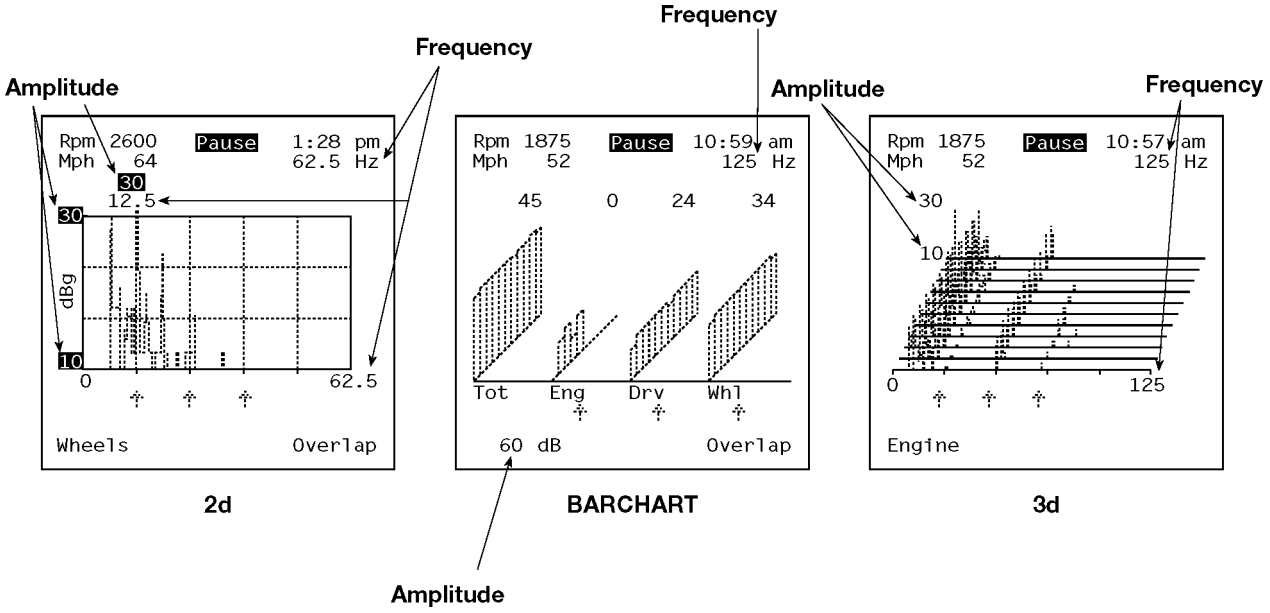

"VIBRATION" function
Continued

Additional display features include:

- RPM and MPH display
- Time display
- Cursor w/Hz and dBg (◁▷)
- "NO data" indicator for RPM/MPH

The **RPM** and **MPH** are displayed in the upper left corner of the screen. This data is collected from the **data link** connected to a **diagnostic connector** identified in the vehicle parameter screen.

Screen Indicators

Fig. 2-22

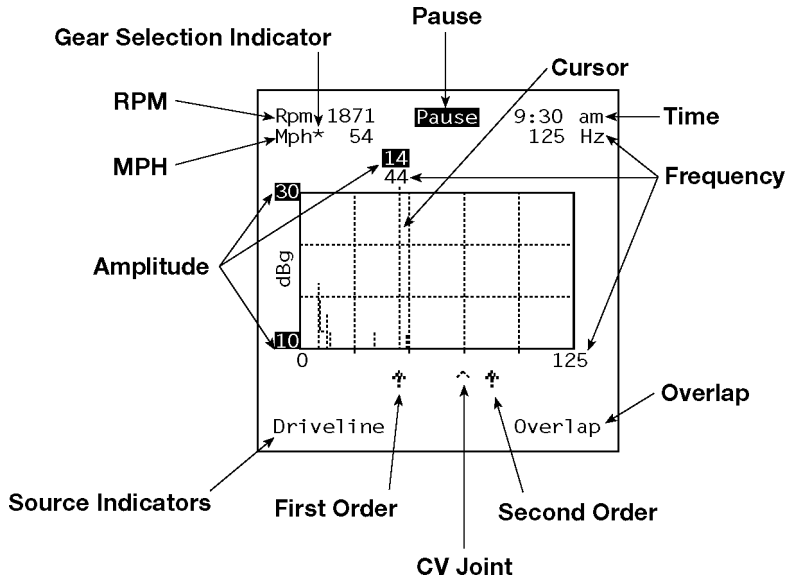

Many NVH concerns are related to **RPM or vehicle speed**. The display makes it convenient to monitor RPM and MPH from the check connector or data stream without additional test equipment.

There are two ways the tool obtains the data for RPM and MPH. The first is from the **data stream on late model vehicles** and the second is from the **IG- signal on non-data stream vehicles**. The tool is able to determine where to get the information when the vehicle is selected by the technician. The vehicles **parameters screen** has a line indicating the connector that has to be used. In addition, an **asterisk** is displayed next to the MPH indicator when gear selection is required by the user.

The tool is not able to determine the **gear selection** when using IG-. The technician needs to **press** [F8 8] **and select the gear manually** for the driveline and wheel indicators to be accurate.

"VIBRATION" function
Continued

The default position for the gear selection is **the highest transmission gear available** and will be accurate when driving in that gear if a selection (F8 8) was not made.

Other differences between using the data stream and IG- include:

- The resolution of RPM on IG- is an actual reading, on the data stream it changes in 25 RPM increments.
- On IG- vehicles when the RPM is below 1600 the MPH reads 0.

RPM and MPH will be displayed if:

- The vehicle is equipped with functioning IG- in the under hood DLC1 (check connector)
- Data stream is available from the DLC1 (check connector), DLC2 (TDCL), or DLC3 (OBD2 connector)
- All connections are complete from the check connector to the NVH Analyzer
- The NVH Analyzer is functioning properly

"NO data" indicator for RPM/MPH is a feature that appears to let the technician know that there is **no communication** through the data link.

NOTE When a vehicle has both IG- and a data stream, the data stream should be used for accuracy. Check for a DLC2 (TDCL) or DLC3 connector and use it if available.

NOTE When using DLC2 (TDCL), the NVH Analyzer must be connected to the cigarette lighter for power. There is no B+ terminal in the DLC2 connector.

The **time** display provides the screen print with a **time stamp** which helps differentiate and sequence multiple printouts. It helps eliminate questions as to whether a printout applies to a specific vehicle or road test event.

A **cursor** is available with the use of the ◁▷ keys which allows the technician to find the exact frequency and amplitude of a particular spike. This is done by placing the cursor directly over the spike and reading the frequency and amplitude above the display. The indicators move with the cursor.

The cursor moves in **equal increments with each stroke** of the key or **progressively faster if the key is held**. If the end of the display is reached then the cursor automatically appears at the **opposite end** of the display.

Scale	Increment
500	4 Hz
250	2 Hz
125	1 Hz
62.5	.5 Hz

"NOISE" function (option)

The **noise selection** from the main menu will function the **same** as the vibration selection. The menus for vehicle setup are the same and the noise function uses the same diagnostic displays. The **exception** is in the parameters for amplitude.

- dB is used instead of dB**g**
- The floor and ceiling level default is **65 to 85 dB**
- The following ranges are available:

  45 - 75 dB
  65 - 85 dB
  75 - 95 dB
  85 - 105 dB
  95 - 115 dB

A **microphone** is used instead of an accelerometer as an input for sound. The microphone is **non-directional** and **cannot** be used to find the location of a noise.

Noise function operates the same as the vibration function because a **noise is also a vibration**. The same skills used to isolate a vibration are also used with noise.

It is important to understand that noise can also be generated by:

- Rattles
- Squeaks
- Wind

These are in **addition** to noises that can be generated by the three component groups indicated by the arrows on the displays:

- Engine
- Driveline
- Wheels and tires

Rattles, squeaks and wind noise will be discussed in the last part of Section 4 and in the **Wind and Interior Noise program**. The techniques used to diagnose these areas are different than noises related to the three major sources that the NVH Analyzer is able to display.

Rattles are usually **low frequency, low amplitude and intermittent** making them difficult to identify on a vibration analyzer.

Squeaks and wind noise are usually **high frequency** above the 500 Hz limit of the NVH Analyzer.

Other noises of significant amplitude, which are within the NVH Analyzer frequency limits, can be displayed on **either the vibration or the noise selection**.

"NOISE" function (option) Continued

The classification process discussed earlier is very helpful in identifying the frequency range of a noise to determine which diagnostic technique is most appropriate:

- For frequency ranges below 500 Hz, the NVH Analyzer can identify one of the three sources of vibration: engine, driveline, wheels.
- For frequencies above 500 Hz, a pinpoint diagnosis for rattles, squeaks or wind noise should be used.

The ability to **control the noise**, through test driving techniques, can produce a relationship between the noise and the spike displayed on the NVH Analyzer.

For example:

> If a noise appears at a specific speed or operating condition then the technician needs to become familiar with the data displayed when there is no noise. When the noise appears then the spike that was not there before should be identified. If the spike appears above a pointer associated with a component group then diagnosis should be directed in that area.

If the frequency of a vibration or noise spike is **not** associated with an arrow, then the frequency should be multiplied by 60 to find the RPM. The components operating at that RPM can be considered for diagnosis.

The **skills** developed in using the NVH Analyzer are now applied in the next area of diagnosis, the road test.

Road Test Procedures

Install NVH Analyzer to monitor and record NVH and vehicle data (See NVH Analyzer operating and instruction manual for details).

A **tachometer** is recommended if a NVH Analyzer is not available and the vehicle is not equipped with a tach. MPH can be noted from the speedometer.

A **road test course** should be selected that allows for **safe** operating conditions that will duplicate the customer's concern. Frequent use of the same course will allow the technician to develop experience in predicting what normal vibrations can be expected during different aspects of the road test.

Known good vehicles should be analyzed on this course for comparison with concern vehicles. This will be most helpful when looking for spikes, related to concerns, on a NVH Analyzer display.

Engine Run-up Test

After installing the NVH Analyzer, use the engine run-up test to determine if the concern is **related to engine speed or vehicle speed**.

With the information from the interview sheet, and the concern verification, try to **duplicate** the symptom by creating the same vehicle and operating conditions described by the customer.

Start at idle, cold or hot, (if applicable) then increase the engine RPM with the transmission in Park or Neutral.

If the symptoms occur, record the vibration to **capture the engine RPM, frequency and amplitude** of the concern for future reference. Further road test procedures are **not** necessary.

If a vibration occurs, but does not directly relate to an engine vibration indicator, then an **accessory** such as power steering, A/C, or water pump should be considered.

These components operate at different speeds/frequencies relative to the pulley diameter. Using the calculations outlined in Section 1 and a photo tach, you can identify the accessory that is related to a spike on the NVH display.

Shifting the vehicle into neutral when the symptoms occur will also help confirm if the concern is engine or vehicle speed related. If the vibration goes away as the engine RPM goes to idle, further diagnosis in the engine area is required.

Brake Torque Test

Some engine related vibrations may be sensitive to **load**. Block the wheels, set the brakes and raise the engine RPM with the transmission in drive. This will apply a load on the vehicle which may cause components to move and vibrate, that would not under normal operating conditions. Use the 3d screen to easily recognize unusual or different vibration.

For example:

- motor mounts
- exhaust system contact
- engine misfire

CAUTION Use care not to overheat the engine or transmission.

Light Acceleration Test

If the above tests do not duplicate the concern then perform the light acceleration test. Accelerate on a smooth, level surface until the symptoms are present. Record the vibration at the point when it is most noticeable.

Note if the vibration changes or disappears when cruise is maintained, after acceleration. If it occurs perform a heavy acceleration to see if the condition can be exaggerated.

Heavy Acceleration Test

Some conditions require the vehicle to be under load, for example, a propeller shaft vibration. Heavy acceleration and/or a road test course that includes a hill will be helpful to provide the load required to duplicate the concern.

For example:

> Loading and unloading a driveline is very helpful in isolating a propeller shaft condition, especially when there is an **overlap** indicated on the NVH Analyzer for driveline and wheels. As the driveline loading changes a propeller shaft vibration will change. A condition in the wheel area will tend to stay constant.

An overlap indication is indicated on the NVH Analyzer with the word "overlap" displayed on the screen and an LED light below the screen. When this occurs, the technician should **change the vehicle condition** to eliminate the overlap and observe the spikes that remain.

Some engine related vibrations, transmitted through the exhaust, are also more noticeable **under load** than during an engine run-up test.

Cruise

Cruise is often the most **common operating condition** of a concern. It is much easier to "tune" into a particular symptom when it is continuous.

In addition to constant vibrations, beating vibrations that come and go need to be observed during cruise over a **longer period of time**. A noticeable beat may occur in 4-6 second cycles.

Although the customer may indicate that the vibration occurs at a particular speed, the road test should include several cruise speeds, (i.e. 35, 45, 55 MPH). The speed the customer mentions may be the most common operating speed and **not** the speed that produces the **greatest amplitude**.

For example:

> Tire vibrations are often most noticeable when they resonate with the suspension or steering system between 40 and 55 MPH. Driveline vibrations are often more noticeable at speeds above 50 MPH.

A road test should also include some rough road to **induce energy** into the suspension that may produce vibrations or shimmy in the steering wheel.

For example:

> A leaking front strut will cause a suspension and steering system to resonate on a rough road.

Rough road conditions may also **produce noises** such as squeaks or rattles that are not as noticeable on a smooth road.

Coasting

The advantage of coasting is that it **eliminates engine vibrations** and **load**. The vehicle environment may become quieter making it easier to notice noises that are **masked** by other sounds.

Deceleration

Deceleration is similar to coasting with the **addition** of **load** caused by engine compression. The load is a different force then load applied during acceleration. This will cause components to react differently under these conditions, producing a larger level vibration.

Turning

CV joint symptoms often appear in a turn when the joint angle increases. In many cases, the NVH Analyzer will show an overlap with a third order wheel vibration. Putting a load on the CV joint may **increase the level of the vibration**, while the third order wheel level would remain the same.

Turns are also helpful in identifying vibrations from components **which contact the body**. **Worn suspension parts** may shift with a side load.

The customer interview sheet can be very helpful to identify the need for this type of test.

Jounce Test

A technician may be able to reproduce a noise by simply **bouncing the vehicle up and down**. It should be done at each quarter of the vehicle while observing components and listening for sounds. A second person is helpful during this test.

Additional Road Test Considerations

When the symptom is at its most noticeable level, the technician can try to **control or modify the symptoms** to help isolate the source. The following chart is a list of additional items to keep in mind while trying to diagnose a concern. You may add items as you gain experience with NVH diagnosis:

Item	Description
Brake application	Lightly applying the brake at cruise may produce a vibration at wheel speed frequency. Pedal feel is important during this procedure. Lightly applying the parking braking will do the same as the above but only to the rear wheels. This can be helpful in isolating a front or rear brake condition. Caution: Use care not to overheat the brakes in this procedure. Damage and additional vibration may result.
Accessories	Turning accessories on and off may also have an impact on the symptoms. They may cause a belt to resonate or slip. This test may also effect an accessory condition caused by a worn bearing, mounting or slipping A/C clutch.
Electric cooling fans	Cooling fans often require a specific temperature level to engage. A fan imbalance or runout condition may only be identified when the fan engages at that temperature.
Power steering	Symptoms relating to power steering may be temperature related. These conditions may only be present with the system under load. For example: a vibrating high pressure hose caused by incorrect mounting or routing.

Alternative Diagnostic Methods

Although the road test or a dynamometer is ideal, and sometimes the only way to duplicate a customer concern, the use of a **lift or safety stands** can also be helpful for diagnosis.

In order for this technique to be **safe and effective**, the following details must be considered:

- **Verification** of the customer concern is very important to determine when diagnosis **without** a road test will produce the symptoms. Not all concerns can be duplicated without setting up the same vehicle and operating conditions. For example, the ability to apply a load to a system.
- To duplicate many driveline and suspension concerns the vehicle has to be raised maintaining the correct **operating angles**.

NOTE New vibrations may occur on a lift that do not exist on the road. This is due to the change in loading of the suspension and possible interaction of the vehicle with the lift. The lift is now carrying the weight of the vehicle not the tires and wheel bearings.

CAUTION **Balance is critical** in safely operating a vehicle in a shop. Normal vibrations may cause a vehicle to move out of position or fall.

- Operating one drive wheel while the other is stationary is a technique used to isolate a symptom. The front wheels on a FR vehicle or the rear wheels on a FF vehicle cannot simulate operating movement and will not contribute to the vibrations in a vehicle. This can be helpful if the vibration concern that was verified goes away.

It is important to remember that the wheel will rotate at **twice** the speed indicated on the speedometer, due to the differential.

For example:

If the speedometer is indicating 40 MPH and one drive wheel is stationary while the other is turning, then the turning wheel is rotating at 80 MPH.

If the stationary wheel is on the ground the vehicle could move causing severe damage. This is especially true in vehicles with limited slip differentials.

NOTE **Traction Control** must be turned **off** on vehicles so equipped. Due to the differential in wheel speed the system will activate.

The **advantages** of this type of diagnosis include:

- The ability to perform a good **visual inspection** while the vehicle is operating. For example, observing runout of a wheel or tire.
- The ability to use tools such as a stethoscope or a screw driver to **amplify a vibration** on specific components

WORKSHEET #4A
Road Test

Vehicle	Year/Prod. Date	Engine	Transmission

Diagnostic Description: **Road Test with the NVH Analyzer Vibration Function**

The road test is a **diagnostic procedure** designed to **duplicate** and **manipulate** the symptoms in order to gain as much **additional knowledge** as possible. This knowledge will help identify the source of the symptom by a **process of elimination**.

This worksheet is the **third** in the series of worksheets that is used to diagnose the conditions placed in the **shop vehicles** by your instructor.

Road Test Procedures

Fig. 2-23

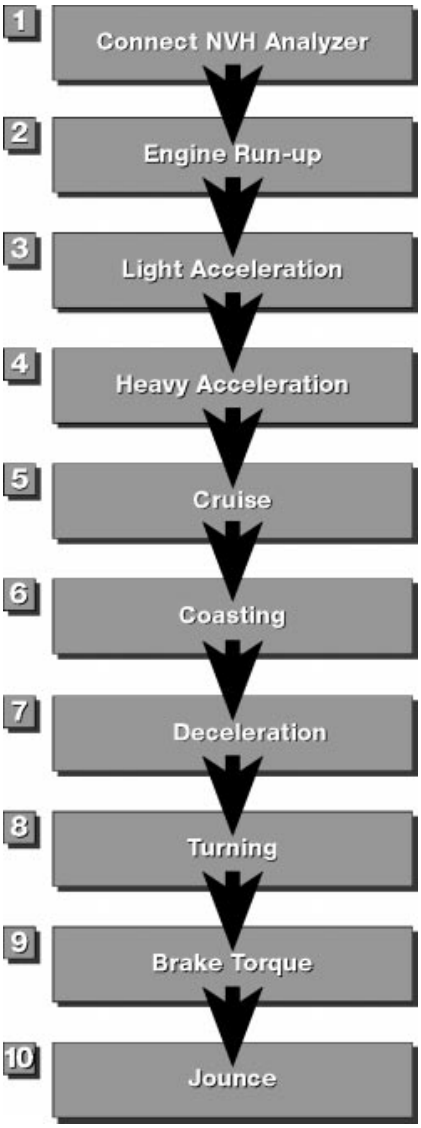

Instructions

1. The technician should use all the information collected during the Verification of the Concern (worksheet #1) and the Classification Flow Chart (worksheet #2) to establish a **road test plan** that is most likely to **duplicate** the symptom/s. The symptom/s can then be **manipulated** and **measured** with the NVH Analyzer. (Refer to Section 2 of the technician handbook.)
2. Consider the possible sources of the concern from the information in step #1 and **develop a strategy** for **analyzing** the NVH data during the road test.
3. **Connect** the NVH Analyzer to the vehicle, perform the road test and **save** the data relating to the symptoms.
4. **Take notes** regarding the road test procedures and results for **review** with the saved data.

   For example:

   > Note if the symptom was most noticeable in a left turn on a hill. The analyzer will display MPH and RPM but cannot tell you the additional information about the road test that you my have performed to duplicate the symptom. With several possible saved samples you may become confused without good notes.

5. **Review** the data saved on all the displays using the skills developed during NVH data analysis worksheets #3A, #3B & #3C.
6. **Identify** the spikes on the 2d and 3d displays that are associated with the symptoms and **compare** the conclusions with the data on the barchart display.
7. Determine the **source** of the symptoms, including the **order**, that will be the focus for the **pinpoint diagnosis**.
8. **Print** the screens and **attach** with the space provided to support your conclusions.
9. **Add the notes** from the road test that will help **identify** the source of the concern and the pinpoint diagnosis area.
10. **Compare** your results with the plan you formulated in step #1 and #2.
11. **Remove** the “bugs”, **retest** and **compare** your results. Attach screen print to the space provided.

Questions

1. **List** the road test procedures you plan to use to **measure** and **duplicate** the concern.

   _____

   _____

2. What is the advantage of making the **road test plan prior** to performing the test?

   _____

   _____

3. What **page** in Section 2 did you find the details of the road test?

   _____

4. **Outline** the strategy you plan to use to **analyze** the NVH data during the road test.

   _____

   _____

   _____

5. **Where** did you connect the **data link cable** to the vehicle?

_____

6. How did you determine this **location**?

_____

7. **Where** did you locate the **accelerometer** and why?

_____

_____

_____

8. List **two** items that are important to consider when **positioning** the accelerometer. Explain each.

_____

_____

_____

9. **How many people** should be involved in a road test and why?

_____

_____

10. **How many events** should be saved and why?

_____

_____

11. What are **two** advantages of taking the **printer** along for the road test, if available?

_____

_____

12. **How many large spikes** are displayed on the 2d display?

_____

13. **Record** the frequency and amplitude of the **significant** spikes on the chart below.

	FIRST ORDER Freq/Ampl	SECOND ORDER Freq/Ampl	THIRD ORDER Freq/Ampl
ENGINE	/	/	/
DRIVELINE	/	/	/
WHEELS	/	/	/

14. What is the **incremental movements** of the cursor on the:
    - 62.5 Hz scale _____
    - 125 Hz scale _____
    - 250 Hz scale _____
    - 500 Hz scale _____
15. What happens to the **cursor** if you **hold** your finger on the key?

    _____
16. On the **barchart** display which component sources indicate a large level of vibration/energy?

    _____
17. **Manipulating** the vibration during the road test can be seen **best** on which display? Explain.

    _____
18. Which display would show a **beating symptom** the best? Explain.

    _____
19. What is the **next display** you would look at once a beating symptom has been observed in question 18? Explain?

    _____
20. Which vibration **changes** frequency when **different gears** are selected with a **constant vehicle speed**?

    _____
21. What are the advantages of the **time indicator**? Explain.

    _____

Conclusion

1. Based on the information used to set up the road test and the data from the NVH Analyzer, what is your **plan of action** for the **pinpoint diagnosis**?

_____

_____

_____

_____

_____

2. Did you notice an **improvement** in the vehicle condition after the “bugs” were **removed**?

_____

3. Did the NVH Analyzer **indicate** an improvement? How much?

_____

4. Upon **discovering** the “bugs” was your **plan** for pinpoint diagnosis **on track**? Explain.

_____

_____

_____

_____

2D	BARCHART	3D
BEFORE		
ATTACH SCREEN PRINT HERE	ATTACH SCREEN PRINT HERE	ATTACH SCREEN PRINT HERE
AFTER		
ATTACH SCREEN PRINT HERE	ATTACH SCREEN PRINT HERE	ATTACH SCREEN PRINT HERE
COMMENTS		

WORKSHEET #4B
Road Test

Vehicle	Year/Prod. Date	Engine	Transmission

Diagnostic Description: **Road Test with the NVH Analyzer Microphone Function**

The **microphone** (optional) is added to the Lexus Diagnostic Tool Set to assist in **diagnosing noise concerns**. It uses the same menus, displays and key strokes as the vibration function.

This worksheet is designed to demonstrate the **functions** of the noise analyzer with the microphone.

Road Test Procedures

Fig. 2-24

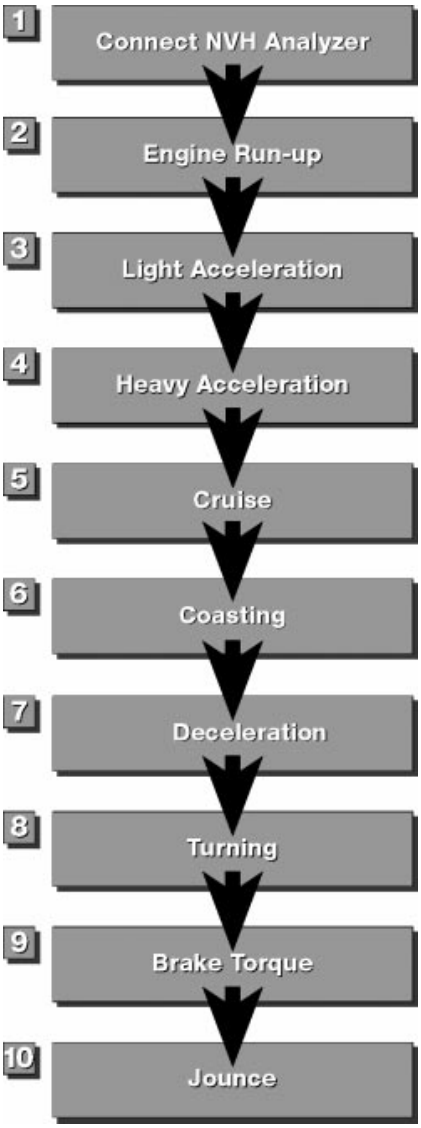

Instructions

1. On the same vehicle you diagnosed in worksheet #4A, connect the NVH Analyzer with the microphone and **select** the NOISE function on the NVH MAIN MENU.

2. Road test the vehicle **duplicating** the symptom and **review** the data on all the displays.

3. **Move** the microphone around the vehicle and **note** any changes.

4. **Save** representative displays that provide the **clearest** view of the spikes associated with the concern.

5. **Print** each display and **compare** them to the print outs captured in worksheet #4A. Attach screen print to the space provided.

Questions

1. Are there any **differences** in the menu structures, key strokes or displays? Please list.

   _____

   _____

2. What **frequency ranges** are available for diagnosis?

   _____

   _____

3. How is the **amplitude** measured?

   _____

   What are the **ranges**?

   _____

   _____

   _____

   _____

4. When the microphone was moved around the vehicle did you note any **significant change**?

   _____

5. What **conclusions** can you draw about the use of the microphone in finding the **location** of a noise?

   _____

6. Where is the **best location** for the microphone for noise diagnosis?

   _____

7. What **types** of noises can be diagnosed with the microphone? Explain.

   _____

8. What type of noises cannot be diagnosed with the microphone? Explain.

_____

9. How would you **resolve** noise concerns that are **not** diagnosed with the NVH Analyzer?

   Where do you get the **information**?

_____

_____

10. What are the **similarities** between the microphone and the accelerometer for diagnosis?

_____

11. What **principle** in Section 1 of the text explains the **phenomenon** in question 10?

_____

2D	BARCHART	3D
BEFORE		
ATTACH SCREEN PRINT HERE	ATTACH SCREEN PRINT HERE	ATTACH SCREEN PRINT HERE
AFTER		
ATTACH SCREEN PRINT HERE	ATTACH SCREEN PRINT HERE	ATTACH SCREEN PRINT HERE
COMMENTS		

Summary

At this point in the diagnosis, the technician has used the following to classify the concern:

- Interview sheet
- Flow chart
- Road test with NVH Analyzer

The classification process has reduced a large list of possible symptoms to just a few which fit the concern.

The technician can now use the specific characteristics associated with the symptom to perform the pinpoint diagnosis, which will be the subject of the next section. (See Section 1 details on the characteristics associated with a specific classification)

Case Study: Part III

The interview sheet was used to choose the following road test from the procedures outlined on the road test reference card:

- *40 - 60 MPH*
- *Cruise*

The NVH Analyzer "Vibration Selection" was used during the road test to capture the data. The technician selected the vibration function because the concern was described as a vibration and a noise. We know that a noise is also a vibration which can be displayed on the tool. (Section 1)

The displays shown were selected based on the information gathered during the verification of the concern.

- *Barchart display shows the largest amount of energy divided between the* ***wheel and driveline*** *areas, with very little energy visible in the engine area.*
- *2d display shows* ***two large spikes*** *in the 125 Hz frequency range.*
  - *The default frequency band (125 Hz) clearly displays the two spikes in question*
  - *The default amplitude window eliminates spikes that may normally appear in a LS400*
  - *The cursor is moved over the spikes in question to display the exact frequency and amplitude*
  - *The F3 key is toggled to see if the engine, driveline or wheel arrows line up with the spikes*
  - *Two displays are captured and printed for future reference, because at 55 MPH the 12 Hz frequency spike lines up with the wheel arrow and the 54 Hz frequency spike line up with the driveline arrow. This information supports the data shown on the barchart display.*

Case Study: Part III
Continued

The 3d display is consulted during the road test to follow the movement of the largest spikes while the operator alters the symptoms observed between 40 and 60 MPH. We verify that the spikes in question are ***vehicle speed sensitive*** *versus engine speed sensitive. When the driver shifts the vehicle to neutral, at the point when the symptoms are most noticeable, the spikes remained.*

LS400 Scenario

Fig. 2-25

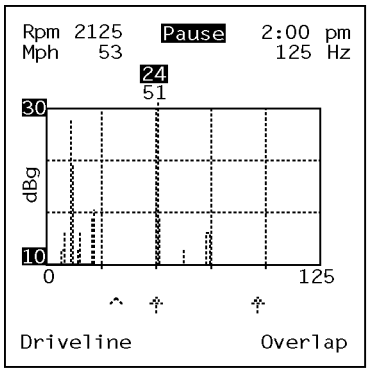

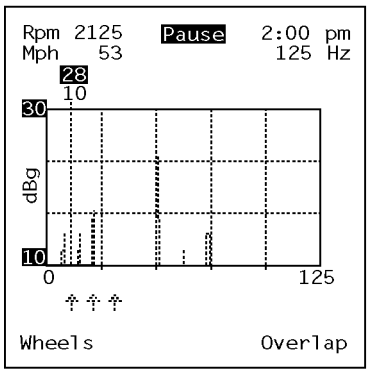

2d

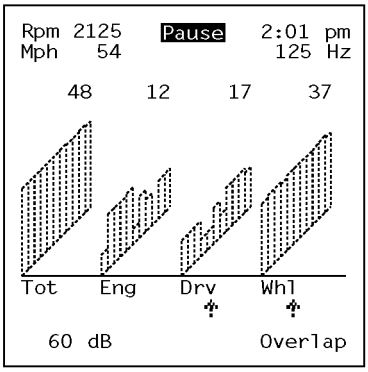

Barchart

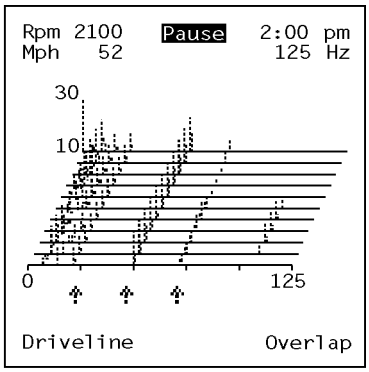

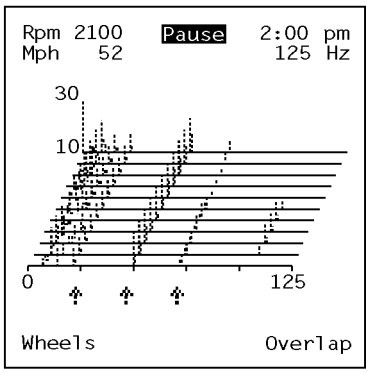

3d

The data indicates that there are ***two possible conditions*** *contributing to the concern. One in the area of* ***wheels*** *and the other in the area of* ***driveline****.*

The road test eliminated the engine as a source of the concern and maximized the symptoms for measuring.

The next section will deal with the pinpoint diagnosis of the ***steering shimmy*** *and the* ***body booming*** *in the* ***driveline and wheel areas****.*

PINPOINT DIAGNOSIS

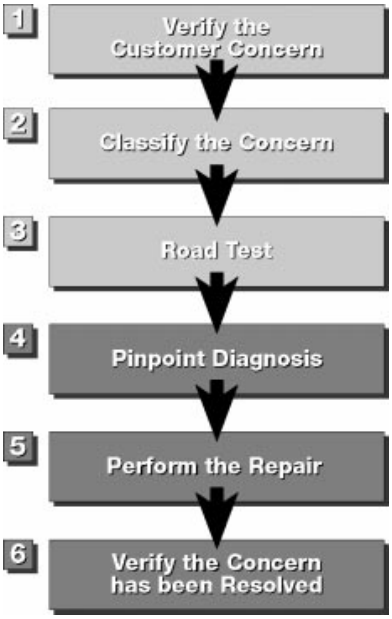

Lesson Objectives

1. Demonstrate the ability to select a pinpoint diagnostic procedure that is appropriate for the conditions identified during the NVH diagnostic procedures.
2. Demonstrate the ability to perform a thorough visual inspection.
3. Demonstrate the ability to use the pinpoint diagnostic charts to assist in selecting the appropriate procedures.
4. Demonstrate the ability to select and perform the proper repair that will ensure long term customer satisfaction.
5. Determine when it is appropriate to call for technical assistance.
6. Be able to list the information necessary for a quick resolution to the concern, prior to contacting technical assistance.
7. Demonstrate the ability to verify the concern has been resolved.

Introduction

The pinpoint diagnosis section focuses on the procedures required to **identify the specific condition** causing the concern. It will also, in many cases, identify the **solution** to resolve the condition. Situations that require additional procedures to repair the condition are covered in Section 4.

At this point in the diagnosis, the technician knows the **symptom** that is associated with the concern and the **source** of the concern.

This part of the diagnostic section will deal with isolating the **component or condition** relating to the concern. It is organized by **source group** (same as the NVH Analyzer), dealing with the most common condition associated with each classification in that source group.

Visual Inspection

Throughout this course we have been discussing NVH in relationship to the senses. It only follows that the **senses** are one of the technicians greatest **assets** in resolving NVH conditions.

Throughout all aspects of diagnosis the technician should:

- Look
- Listen
- Feel

A thorough **visual inspection** can provide the technician with clues or even reveal the condition causing the concern. Observations can uncover:

- Vehicle damage
- Previous service
- Broken, loose, missing or worn components
- Aftermarket installations
- Tire wear or damage

Examples include:

- An aftermarket exhaust system that is not built to the same specifications as an OEM systems. These types of parts can produce drones or body contact which will show up on the NVH Analyzer as an engine related vibration.
- A trailer hitch installation that produces a transmission path to the interior of the vehicle.
- Mass or dynamic dampers that have been removed for a service procedure and not put back on the vehicle.
- A reinforcing bracket between the engine and the bell housing left off during a previous service.
- A bell housing which has not been properly torqued.

Visual Inspection
Continued

During a visual inspection, a **stethoscope or a screw driver** can be used to **amplify** a vibration from a suspect component and relate it to the concern vibration.

Examples include:

- Lightly holding a screw driver on the metal support of a vibrating headrest. The resulting tapping noise can be associated with a frequency range. Knowing the frequency would help the technician identify the source of the vibration.
- Lightly holding a screw driver on components such as an exhaust system or suspension will amplify a vibration which can be associated with the customer concern.
- Care must be taken in the above procedures to avoid contact with moving or rotating components.
- Extreme caution must be taken while diagnosing an operating vehicle in the air to insure that the vehicle does not move.

Sophisticated automotive stethoscopes are available to assist in isolating a concern. Some are based on the screwdriver technique and others are **electronic** with multiple clip-on microphones. The clips can be placed in different areas of the vehicle and monitored with earphones to determine the location of a condition.

Stethoscope

Fig. 3-1

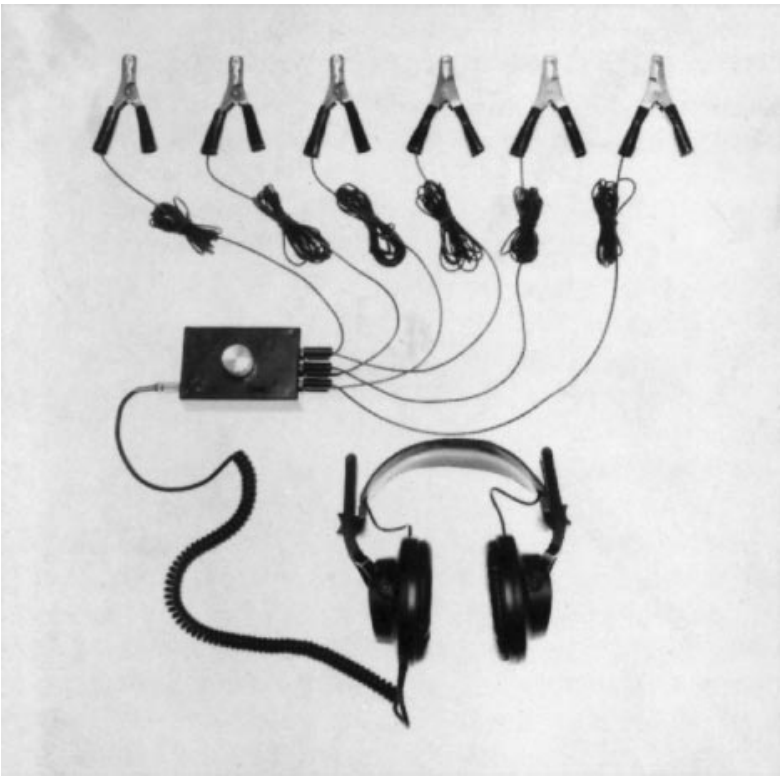

Visual Inspection
Continued

A close look at the wheels and tires while a vehicle is on a lift can reveal many possible causes of concerns. Examples include:

- Wheel covers for fit, looseness and condition.
- Lug nuts and studs for proper size, torque, fit or condition. For example, a large locking lug nut can contribute to an imbalance condition that would not be corrected on an off car balancer.
- OEM wheels are important for proper fit and suspension geometry.
- Incorrect tire match (brand, size or inflation).
- Rotate the tire to look for obvious conditions such as damage, runout or lack of uniformity.
- Check the tread for wear that could indicate conditions that require correction. For example, alignment, balance, or worn suspension components.
- Listen for noises while rotating a wheel and tire. This will help identify loose components, foreign matter inside a tire or worn bearings.
- Look for evidence of tire filler or plugs that could contribute to an imbalance.
- Lodged ice, mud or other foreign material in the rim or suspension components.

The key to a successful visual inspection is to be **familiar with the vehicle** you are diagnosing and to **pay particular attention to detail**. Take the time to look closely at non concern vehicles while performing other services. This will provide the experience that will be useful to quickly identify conditions that don't normally exist on a vehicle.

Visual Inspection

Fig. 3-2

Pinpoint Diagnosis by Source and Symptom Charts

This part of the pinpoint section is designed to be a reference that discusses diagnostic procedures relative to the common NVH conditions outlined in Section 1.

Conditions are grouped into three charts. They are the vibrating sources that are identified by the NVH Analyzer:

- Engine Symptoms Diagnostic Chart
- Driveline Symptoms Diagnostic Chart
- Wheel and Tire Symptoms Diagnostic Chart

Some conditions will appear in more than one chart. The use of the classification flow chart, road test and a knowledge of the theory relating to these conditions will insure that the proper pinpoint diagnostic procedures are being used.

NOTE Refer to the end of this section for the charts.

Summary

The pinpoint diagnosis determines the **specific cause** of the concern and analyzes the possible solutions.

If a specific condition and solution is not identified at this point then the diagnostic steps need to be **reviewed** for areas that may require **further investigation**.

If the condition has **not** been resolved after carefully reviewing your diagnostic procedures and conclusions, then technical assistance should be consulted.

Be sure to have the details of the diagnosis ready when calling for help (Discussed in detail later).

Case study: Part IV

From the classification, road test and NVH Analyzer, it is established that the two symptoms are steering shimmy and body booming. They are caused by the driveline and wheels.

The NVH Analyzer indicates that the greatest amplitude is in the area of driveline. This would make a good starting point for pinpoint diagnosis.

Pinpoint diagnosis of the driveline would include checking the following:

- *Balance*
- *Runout*
- *Angle*
- *U-joint inspection*

This order was selected because the symptoms indicate balance as the most likely because the driveline spike was a first order vibration. (Section 1)

During the diagnosis for balance, it was found that the propeller shaft was out of balance.

Case study: Part IV
Continued

Balancing the shaft according to the procedures in Section 4, corrected one of the symptoms of the customer concern.

A pinpoint diagnosis of the wheel and tire vibration includes checking the following:

- *Balance*
- *Runout*
- *Condition*

The symptom is a steering shimmy vibration and a distinct second and third order vibration was noticed. Therefore, wheel balance should be your first step. (See Section 1)

Section 4 should be consulted for the proper balancing procedures.

Choose and Perform the Appropriate Repair

Once the pinpoint diagnosis has been performed **revealing the problem**, the technician has to make a **critical decision** regarding **long term** customer satisfaction: How to repair the vehicle effectively.

Depending on the condition or problem found, there are many resources available such as, the repair manual, TSBs, NCFs and EWDs. In addition, assistance is available from the AFTS or the 800 hot line.

Unfortunately, in some cases, the industry has experienced a level of repair or a short cut procedure that is below standard and not in line with long term customer satisfaction. This usually occurs as a result of **frustration** due to a poor diagnostic procedure. Hopefully, the diagnostic procedures outlined in this course and the NVH Analyzer will **minimize** those frustrations.

Section 4 of this course deals with the common repair techniques used in NVH repair. Many of the other NVH repairs are standard service procedures detailed in the **repair manuals**.

Technical Assistance

Current vehicles are very complex and the amount of information required to **successfully repair a vehicle the first time** is enormous. Lexus recognizes this fact and has established systems to provide the technician with assistance. The areas for assistance are:

- TAS 800 hot line
- Area Field Technical Specialist (AFTS)

During NVH diagnosis the possible conditions vary greatly and may or may not be easily serviceable by the technician. By using TAS, technicians can tap into resources which provide a data base of **similar situations and successful solutions**. Outside help can also provide some **objective clarity** to our diagnostic process and point out additional areas to examine.

Technical Assistance
Continued

It is important to look at assistance as an **additional tool** and **not** a last resort or a sign of failure.

In order for assistance to be successful, however, there are key factors that **must** be in place **prior** to making your call:

- Good communication skills
- Organized diagnosis procedure
- Reliable data

Most assistance is done over the **phone**. The listener cannot verify the concern or follow the diagnostic procedure on the vehicle and therefore must **rely on what they are told**. The use of **standardized terms** is critical. The symptoms and description must be **clearly understood** by both parties.

When both the technician and the engineer use the same diagnostic procedure, then the engineer can follow along in the same **organized manner** as the technician. The engineer can **predict the steps** and not get confused in trying to sort out a random diagnosis. At specific points in the discussion, the engineer will be looking for **data** that will support the decision process.

The engineer can now **point out conditions** to consider, in the diagnosis or the data, which will redirect the technician toward a successful solution.

He may **confirm your conclusions** and recommend **further assistance** to deal with a condition that is **not** serviceable by the technician.

Nobody likes to get “buried” in a job and customers do not like the service experience associated with the inability to satisfactorily resolve a concern. As the service experience becomes unpleasant to the customer, they often become more difficult to satisfy.

The **quicker** the technician resolves the concern, or identifies the need for outside help, the better the service experience for all involved.

It is important to note that jumping to assistance without making a **concerted effort** to follow the above procedures is also a **waste of time**. Without specific information, technical assistance cannot help, and **will** direct you to perform the procedures.

Summary

Technical assistance is an option for a technician when help is needed in diagnosing a serviceable concern or in identifying when outside technical support is necessary.

The key is to have solid diagnostic data available and to use technical assistance as soon as it is necessary.

The object is to get the concern resolved to ensure customer satisfaction and not wait until it is a last resort or too late.

Case study: Part V

The concerns on the LS400 are easily diagnosed and resolved by the technician. Technical assistance should not be necessary in this case.

If the conditions found did not exist, yet there was still a verifiable concern, then assistance should be consulted using the above criterion and the support documentation from the diagnosis.

Verify that the concern has been satisfactorily resolved

The data collected while verifying and measuring the concern will be useful as a basis for comparison of the effectiveness of the repair.

In many cases the vibration or sound will never completely go away. The objective may be to lower the amplitude to an acceptable level. The acceptable level may change for a customer as they become tuned into the concern, especially if they are experiencing some frustration with the service experience. Simply showing the customer graphic printouts of the improvement may satisfy them.

The advantage of hard data is to objectively provide a comparison to show improvement or the acceptable levels of other similar vehicles.

Summary

When the concern is successfully resolved and verified, then the vehicle is ready to be returned to the customer. You will have the confidence of knowing the diagnosis and repair was done right the first time and you will have the documentation to prove it.

If you cannot objectively verify that the concern has been resolved, then the opportunity exists to go back through the process to find the condition, without the customer's involvement.

Case study: Conclusion

A test drive with the NVH Analyzer verified that the concern was resolved when a comparison is made with the data collected during the road test.

LS400 Scenario Screen Print

Fig. 3-3

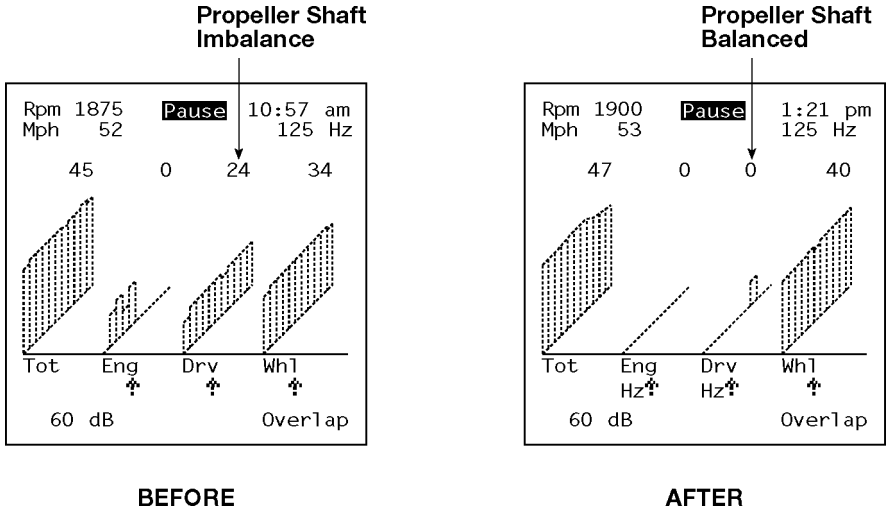

The next section of the course will deal with the common NVH repair techniques in greater depth.

Notes

TABLE OF CONTENTS

Engine Symptoms Pinpoint Diagnosis 142
Symptom: Accelerator Pedal Vibration 142
Symptom: Shift lever vibrations 143
Symptom: Engine Noise 146
Symptom: Clutch Judder 148
Symptom: Take-Off Vibration 151
Symptom: Crank Vibration 153
Symptom: Idle Vibration 153
Symptom: Body Booming 154
Symptom: Body Beating Noise 155
Driveline Pinpoint Diagnosis 156
Symptom: Transmission Gear Whine and Differential Gear Whine 156
Symptom: Body Booming noise 158
Symptom: Body Beating Noise 159
Wheel Pinpoint Diagnosis 160
Symptom: Body Shake, Steering Flutter, Steering Shimmy 160
Symptom: Riding Comfort, Harshness, Road Noise, Tire Pattern Noise 163
Symptom: Brake Vibration 164
Symptom: Brake Squeak 165
Symptom: Body Booming Noise, Body Beating Noise 166

Engine Symptoms Pinpoint Diagnosis

Symptom Accelerator Pedal Vibration

Description

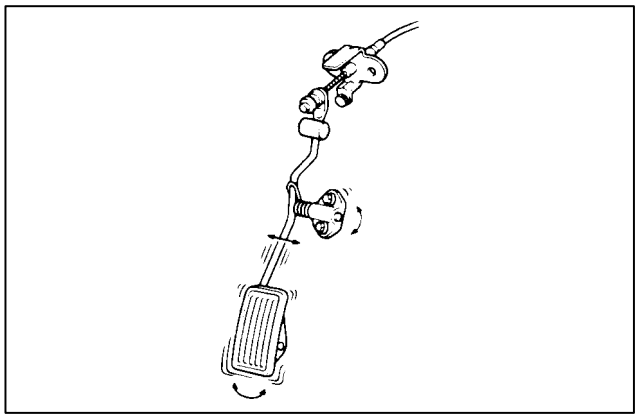

Accelerator Pedal Vibrations
Fig. 3-4

Accelerator Pedal Vibrations occur at frequencies associated with engine speed.

They are usually of low amplitude and not in the direction of the pedal stroke.

They can usually be duplicated when the engine reaches a specific RPM regardless of vehicle speed.

If the vehicle is moving, the vibrations will go away when coasting in neutral.

Pinpoint Diagnosis

Pinpoint diagnosis includes inspection of the engine running condition at:

- the RPM recorded during the verification and classification sections
- idle quality both normal and under load (A/C, P/S, electrical load)
- fast idle quality both normal and under load
- cruise RPM

Pinpoint inspection also includes checking:

- the engine, transmission and accessories for contact with the body
- throttle lever and accelerator cables
  - check brackets, bushing and grommet
  - disconnect cable clamp and A/T throttle cable and see if the vibration changes. If the vibration disappears when the A/T throttle cable is disconnected then inspection of the transmission may be required
- accelerator pedal
  - play or looseness
  - return spring and free play
  - mass damper (if equipped)

Remarks

A complete TCCS diagnosis may be required to deal with engine driveability conditions that may contribute to engine related vibrations.

Symptom Description

Shift Lever Vibrations

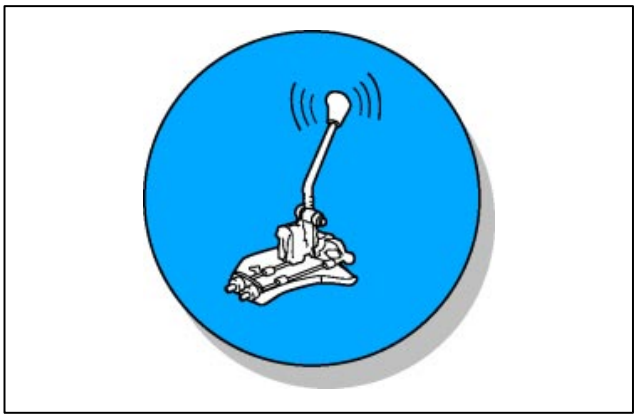

Shift Lever Vibrations
Fig. 3-5

Shift lever vibrations are generated by engine torque fluctuations or imbalance of revolving or reciprocating engine components.

They occur at particular, high engine RPM and may be amplified by imbalance in the propeller shaft or shaft joint angle on a FR vehicle.

They may also be associated with a “buzz” sound.

Pinpoint Diagnosis

Inspection and repair of shift lever vibrations include the same engine condition inspections outlined in the accelerator cable vibration section, with the addition of the following:

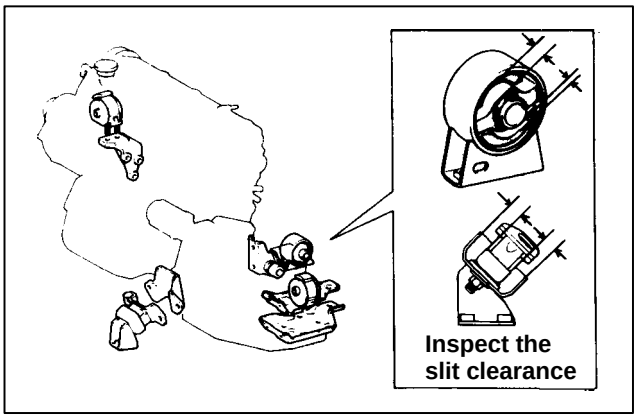

Mounts
Fig. 3-6

- check the engine and transmission mounting for:
  - overall alignment
  - contact or looseness at mounting points
  - mount slit clearance
  - deterioration of rubber quality due to a leak

Pinpoint Diagnosis
Continued

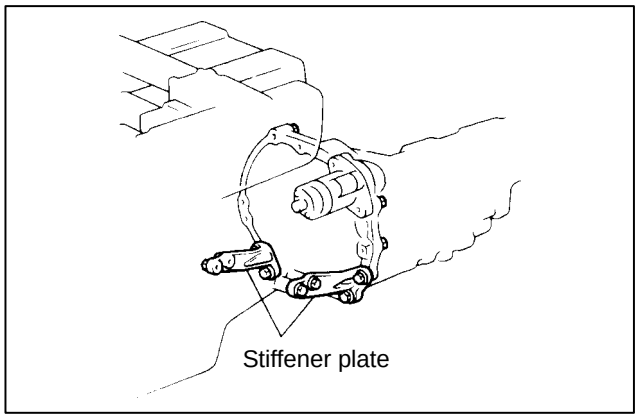

Stiffener Bracket
Fig. 3-7

- engine and transmission tightness including stiffener plates or brackets must be checked

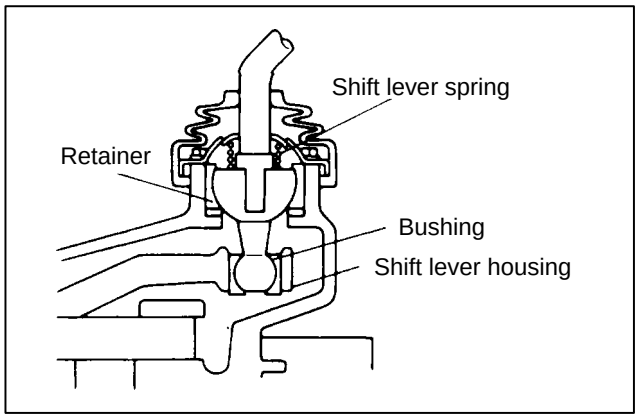

Shift Lever
Fig. 3-8

- shift lever
  - check for installation
  - wear of housing and retainer
  - action of the restriction pin

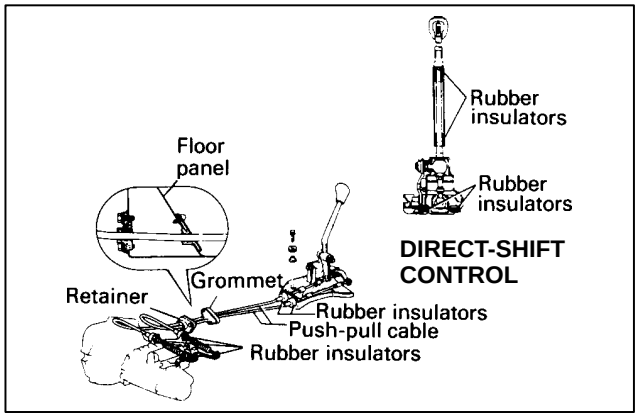

Linkage
Fig. 3-9

- shift control linkage and cable
  - check for bent linkage and excessive play
  - cables need to be checked for proper flex, contact with other components and excessive play

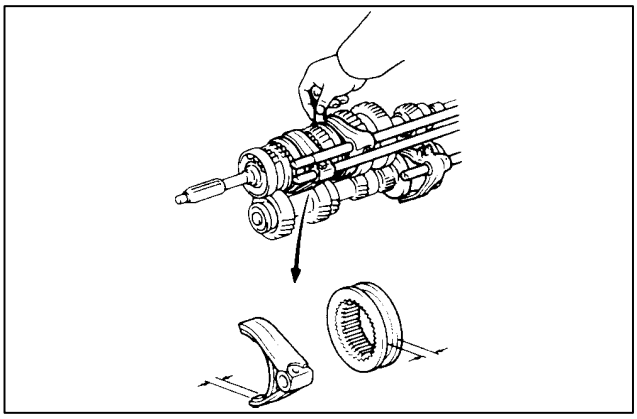

Transmission Condition
Fig. 3-10

- transmission condition
  - check for play in the shift fork and shaft
  - inspect each gear and thrust clearance
  - shift fork to hub sleeve clearance

Remarks

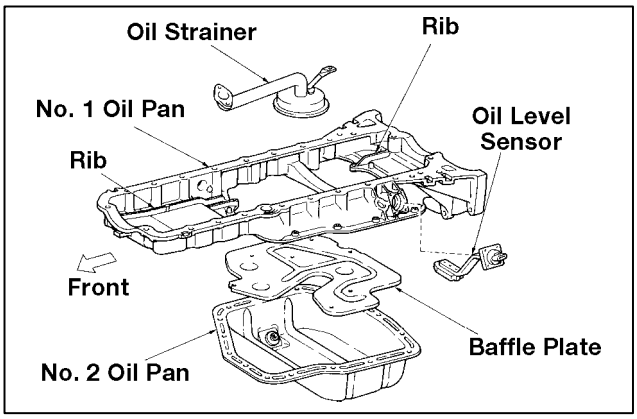

Two Piece Oil Pan
Fig. 3-11

The two piece oil pans on later model vehicles have been designed to improve NVH characteristics. Stiffener plates are not used on these vehicles.

Symptom Description

Engine Noise

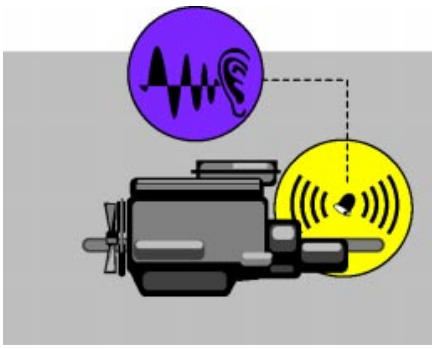

Engine Noise
Fig. 3-12

Engine noise is engine speed related and may require a change in load.

Pinpoint Diagnosis

Engine noise is most commonly diagnosed by searching for the source visually or with a stethoscope.

Other techniques such as, removing a plug wire and grounding it or disconnecting an injector, can help identify the location of an internal engine noise. By changing the firing load in a cylinder, noises from a piston, piston pin or rod bearing condition may change, identifying a cylinder causing the concern.

Vehicles with multiple belts can be diagnosed by removing the belts one at a time until the condition changes. Accessories associated with the belt and the condition of the belt should be checked. Components include:

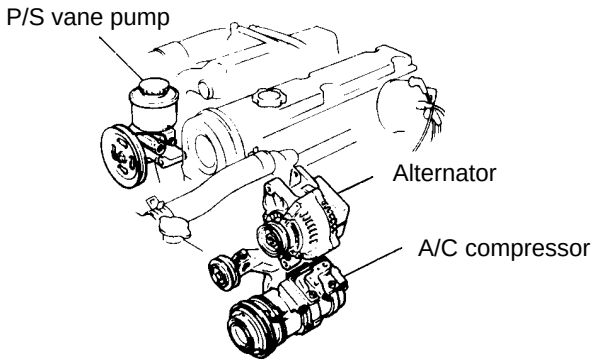

Engine Accessories
Fig. 3-13

- fan
- fan shroud
- alternator
- water pump
- A/C compressor
- idler pulley
- P/S pump

CAUTION Perform diagnosis quickly when belts are removed so that concerns such as overheating will not occur.

Pinpoint Diagnosis
Continued

The air intake system can also be a source of both noise and vibrations. This system is designed to deliver filtered, fresh air to the engine with minimal noise. Many systems incorporate resonators to accomplish noise reduction.

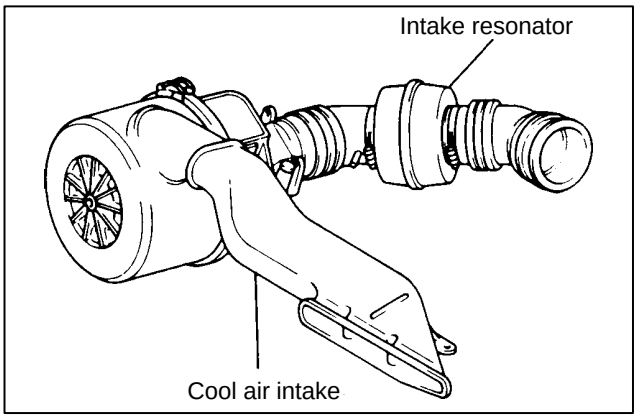

Intake System
Fig. 3-14

A technician can inspect the air intake system:

- for the proper components properly connected
- to see if the concern can be modified by pushing on or disconnecting components or hoses
- for proper mounting and mount condition
- for foreign material that can make noise or cause an obstruction

Remarks

The exhaust system is discussed in many areas of this course as a possible transmitter of engine vibration and noise through body contact. You should also consider the possibility of exhaust restriction as a potential noise source. Vehicles with this condition would also exhibit power loss under load. A vacuum gauge is very helpful in pinpointing a restricted exhaust condition.

Symptom Description

Clutch Judder

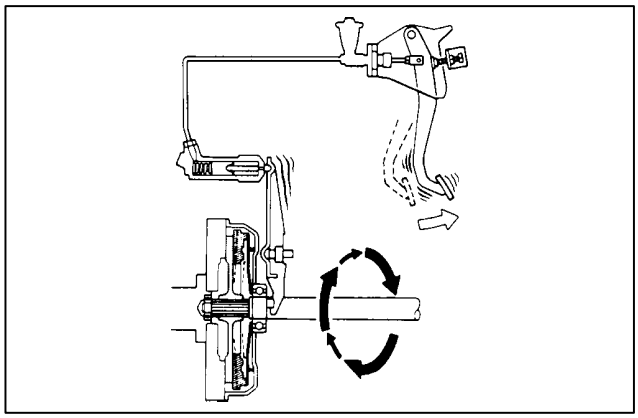

Clutch Judder
Fig. 3-15

Clutch judder can be reproduced during partial clutch engagement when the vehicle encounters rolling resistance, for example, climbing a grade. This condition can be simulated by lightly applying the brake during clutch engagement.

Pinpoint Diagnosis

Engine running condition needs to be considered as well as the condition of the motor mounts when troubleshooting engine noise.

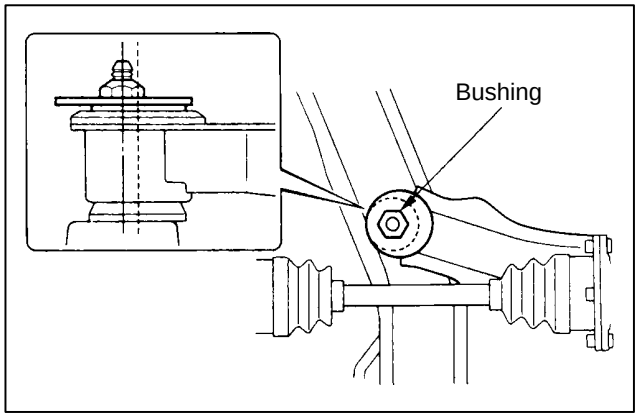

Bushing Contacts and Slits
Fig. 3-16

Suspension bushings need to be inspected by prying them apart and checking the slits provided to minimize vibration and noise. The suspension system can be a transmission path for normal vibration during clutch engagement.

Pinpoint Diagnosis
Continued

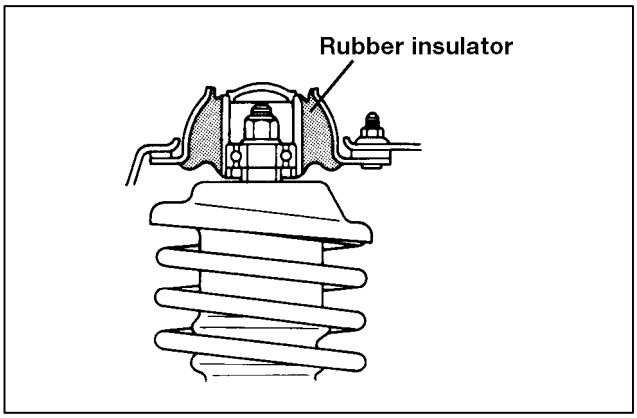

Rubber Insulator
Fig. 3-17

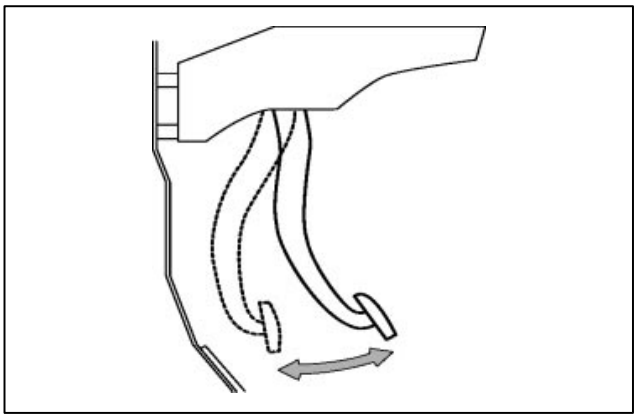

Clutch Pedal Free Play
Fig. 3-18

The pedal height, free play and movement need to be checked while operating the pedal. Repair manual procedures contain the specifications should an adjustment be required.

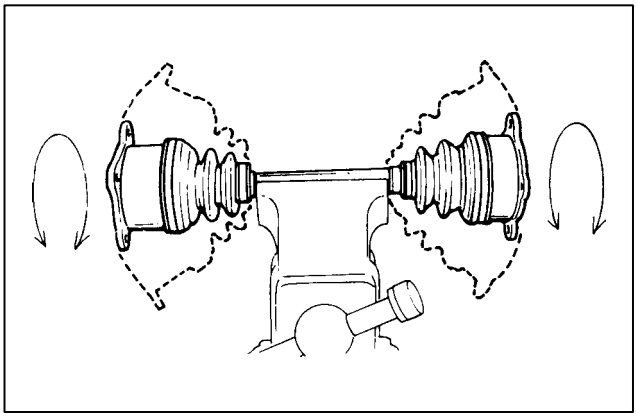

Driveshaft
Fig. 3-19

A driveshaft can cause a clutch judder condition. It should be checked for smooth operation without excessive free play.

Pinpoint Diagnosis
Continued

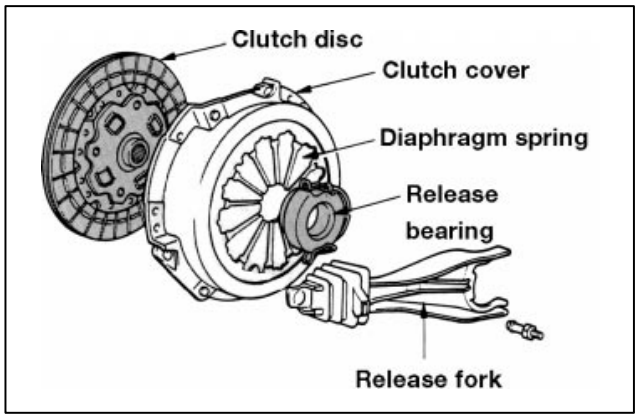

Clutch Assembly
Fig. 3-20

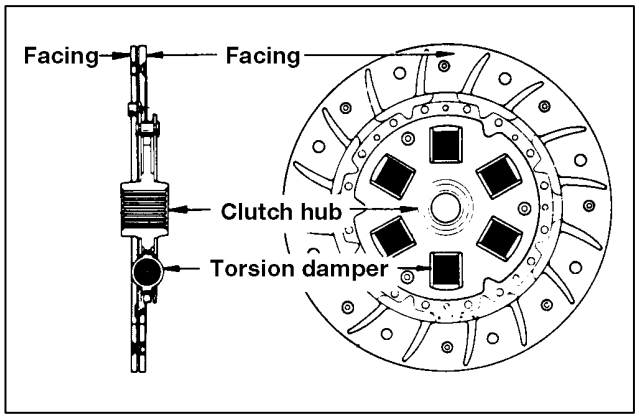

Clutch Disc
Fig. 3-21

When external inspections do not produce the condition then inspection of the clutch assembly is necessary. This includes the following:

- Lexus clutch components are specifically designed to meet the torsional characteristics required for torque fluctuation of the engine. These components are recommended to ensure the best operation of the clutch.
- the clutch release lever needs to be checked for mounting, alignment and wear.
- the release bearing should be checked for proper alignment and smooth movement. Retaining clips should also be checked.
- the pressure plate assembly and diaphragm spring must be inspected for:
  - wear
  - spring tension and alignment
  - evidence of heat that would effect the temper and tension of the spring
  - evidence of discoloration or hard spots on the pressure plate and flywheel
  - scores, grooves or runout in the pressure plate or flywheel
  - warpage of the pressure plate mounting assembly due to uneven torque or loose mounting bolts
  - clutch disc surface condition, rivets, torsion springs, and spline must be looked at closely
- close inspection of the transmission input shaft spline and pilot bearing also reveal the cause of the concern

Symptom Description

Take-Off Vibration

Take-Off Vibration
Fig. 3-22

Take-off vibration occurs when the vehicle transitions from a stop to initial acceleration. It can be noticed in the dash, steering wheel (vertical movement) and floor on FR vehicles.

This type of vibration occurs at low frequency (15 to 30 Hz) for short periods of time and may be extended by idling slowly up a hill.

Pinpoint Diagnosis

Torque fluctuations are transmitted to the body through the following areas:

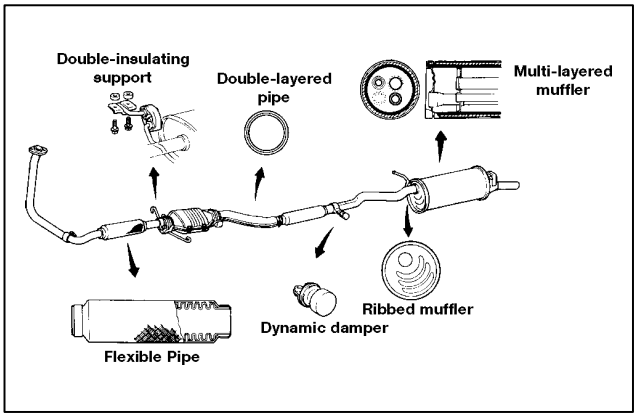

Exhaust System Inspection
Fig. 3-23

- The exhaust system needs to be checked:
  - when it is both cold and hot because it will expand and contract with temperature
  - for overall exhaust system tension by looking at the load on each rubber mount. Loosening the entire system to relax the tension and retightening it is effective in resolving many concerns
  - for damage
  - for alignment
  - for OEM components
  - for the condition of rubber mounts for hardening, cracks and elasticity
  - for rubber stoppers, clamps and the body for evidence of contact

Pinpoint Diagnosis
Continued

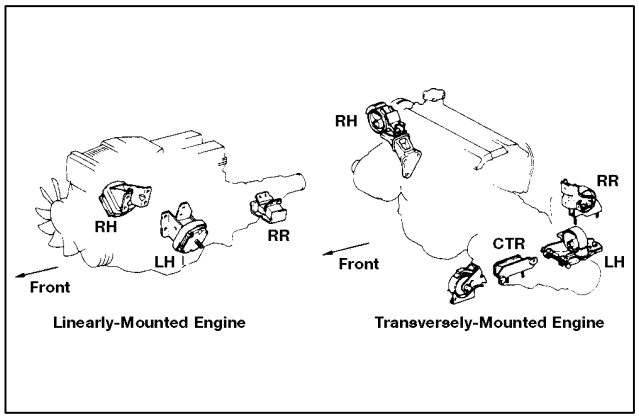

Engine Mounting
Fig. 3-24

- Engine mounts can be inspected as in other engine related NVH diagnosis. Engine torque type concerns relating to mounts or contact can be duplicated by rocking the power train. This is done by increasing the RPM with the vehicle in gear, wheels blocked and the brakes applied. Both drive and reverse should be used.

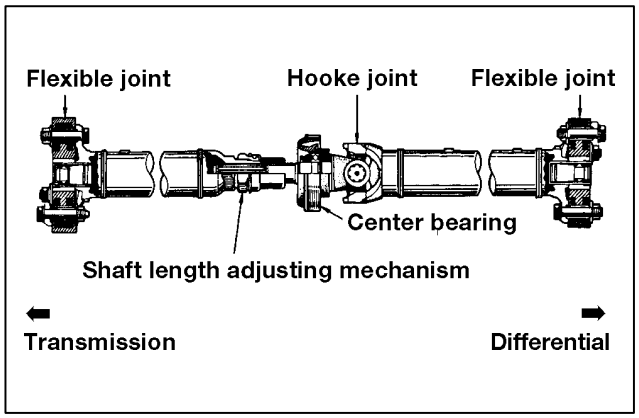

Propeller Shaft Inspection
Fig. 3-24

- The drive shafts must rotate smoothly without excessive play. Both conditions are sensitive to torque fluctuations.
- Take-off vibrations that are felt in the floor may be produced by the propeller shaft and transmitted through the center carrier. An inspection of the propeller shaft includes checks for:
  - play at the extension housing and yoke
  - missing weight (look for a trace of a spot weld)
  - joint phase
  - smoothness and runout (rotate shaft manually)
  - center bearing alignment both vertically and horizontally

Remarks

CAUTION

Do not perform the engine torque test at high RPM or for extended periods due to overheating of the engine, torque converter or transmission.

See Section 4 for details on propeller shaft inspection and repair.

Symptom **Crank Vibration**

Description Crank vibration occurs at a low frequency (5 - 15 Hz) during engine cranking.

Pinpoint Diagnosis Engine related conditions that impact torque fluctuation during cranking include:

- uneven compression between cylinders (diagnose with a power balance and/or compression test)
- ignition timing and excessive engine temperature (The concern verification section is very helpful in this area because the concern will not occur every time the engine is cranked.)
- hydraulic lock in a cylinder due to a leaking injector or head gasket
- worn starter bushings (diagnose with a starter current draw test)

Transmission of normal cranking vibrations through the exhaust system and engine mounts are diagnosed the same as in the previous engine conditions.

Symptom **Idle Vibration**

Description (10 - 50 Hz)

Pinpoint Diagnosis Idle vibrations require the same diagnosis procedures as cranking vibrations with the addition of an engine idle quality inspection.

They may be more noticeable when the engine is under load, for example, when in gear or with the A/C on. Vehicles with transverse-mount engines are more sensitive to idle vibrations that are transmitted through the exhaust system.

If it is found that an engine performance condition is the cause of the symptoms then a thorough TCCS diagnosis is recommended.

Symptom

Body Booming Noise

Description

Body booming noise is a symptom that can be caused by engine, driveline and tire/wheel conditions.

NOTE Be sure to check the details in all three source areas when diagnosing a body booming symptom.

Pinpoint Diagnosis

Establishing whether a symptom is engine speed related or vehicle speed related is the first step in determining which area to focus the pinpoint tests. Engine related symptoms can be heard while increasing the engine RPM, therefore, the engine can be eliminated as the cause if the noise is heard while coasting in neutral.

The exterior of the body should be checked for conditions that may resonate with normal vibrations. A thorough visual inspection is important to find conditions such as fit, looseness or damage of body components. An overall look at the vehicle ride height will help you identify conditions such as uneven tire inflation.

Inspection for engine noise should be performed through all operating engine speeds including the RPM that produces the most noise. All engine driven accessories should be operated to see if they contribute to the condition.

A technician should look at the belts, component fit, rattle or contact and any foreign material lodged between components. Engine mounts should be checked during this inspection as mentioned before.

While duplicating the noise, see if it changes while modifying the intake air duct system, such as disconnecting or pushing on it.

The exhaust system is also an area that will cause a body booming noise which is engine related. The system should be checked for damage, mounting, contact with the body and clamp condition. As stated before, the system should be checked to determine that it is properly designed for the vehicle.

An exhaust system changes shape with temperature and should be checked in all temperature ranges. Modifying the system by removing hangers or placing a jack under it to keep it stationary will also help to isolate the exhaust system as the cause.

Symptom Description

Body Beating Noise

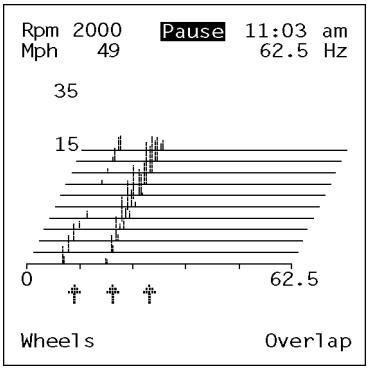

Beating
Fig. 3-26

Body beating noise requires two vibrations as discussed in Section 1.

It is being addressed in the engine area because the vibrations generated by the engine can be one of the two vibrations involved.

Engine vibrations contributing to body beating include imbalance and torque fluctuation. Imbalance is a first order vibration, while torque fluctuation is a second order vibration on four cylinder engines and third order on six cylinder engines.

A vibration from the engine area combined with one from the driveline or wheel will create the body beating symptom. Resolving this type of concern can be done by eliminating either one of the vibrations or reducing both of them to a minimal level.

Duplicating a beating noise requires a slow change in engine RPM while waiting for the symptom to occur. A beating noise is most noticeable at a frequency between 2 and 6 Hz therefore the technician needs to hold a constant speed long enough for the symptom to appear.

Body beating is a cyclical sound which will occur at a particular RPM. This RPM should be identified during verification of the concern.

Both engine speed and vehicle speed are required to create this symptom, therefore the vehicle speed should also be identified during verification for diagnosis of the second vibration.

Pinpoint Diagnosis

The specific pinpoint tests for the engine vibration are the same as those for body booming noise. In addition, the engine and transmission tightening and the stiffener bracket should also be inspected.

Driveline Pinpoint Diagnosis

Symptom Description

Transmission Gear Whine and Differential Gear Whine

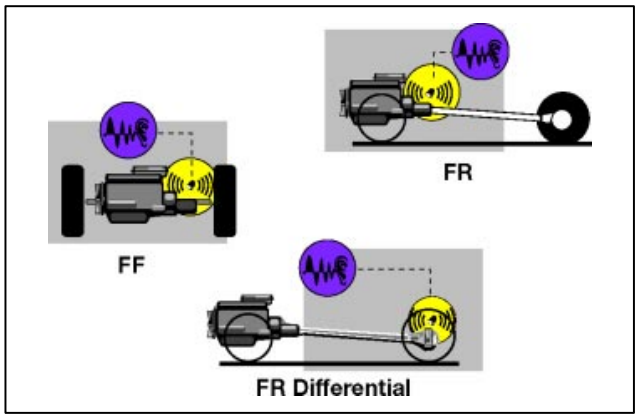

Gear Whine
Fig. 3-27

Transmission gear whine and Differential gear whine are very similar sounds that are not likely to be noticed on the NVH Analyzer. The frequency range is between 400 and 3k Hz for transmission gear whine and 400 to 1500 Hz for differential gear whine which are above the 500 Hz range of the NVH Analyzer.

Pinpoint Diagnosis

To pinpoint the source of gear whine, first determine which symptom exists. The road test will be the most useful technique for this step.

- Operate the vehicle at the speed the whine is most noticeable.
- Then change the speed of the vehicle to see if the noise is speed related.
- Next change gears to determine if the noise changes with different gear selections.
- Note the level of the noise when the gear ratio is 1:1. At this ratio the power flow is direct through the transmission and the load on the gears is the minimal.

Differential gear whine is vehicle speed related and will not change with different gear selections.

The transmission path is an important area of pinpoint diagnosis for both transmission and differential gear whine. Inspection of components that could transmit noise to the passenger compartment will often resolve the concern.

Inspection of body sound insulators is also important in gear noise diagnosis. The technician should look for the following:

- gaps in body panels
- damage to grommets, body molding, boots and seals
- condition of sound absorbing materials such as asphalt sheets, silencer pads and floor carpets.

Pinpoint Diagnosis
Continued

Remarks

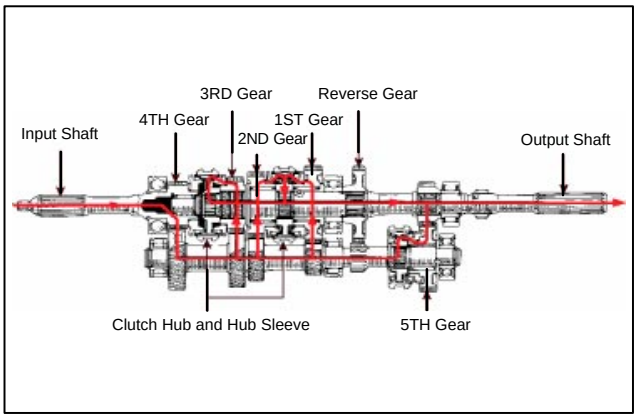

Gears
Fig. 3-28

If it is determined that the noise is coming from the transmission or differential, careful inspection of the gears as well as the bearings is important.

Gear whine and bearing noise are very similar, depending on the condition of the bearings, and difficult to isolate in a test drive. Bearing condition could also have an effect on gear mesh and condition.

A thorough understanding of the transmission power flow, will help anticipate the gears and bearings causing the concern during the test drive.

The repair manual is an important resource to consult when diagnosing and repairing internal transmission and differential noises. Procedures and specifications are available to insure the component is repaired properly the first time.

Symptom Description

Body Booming Noise

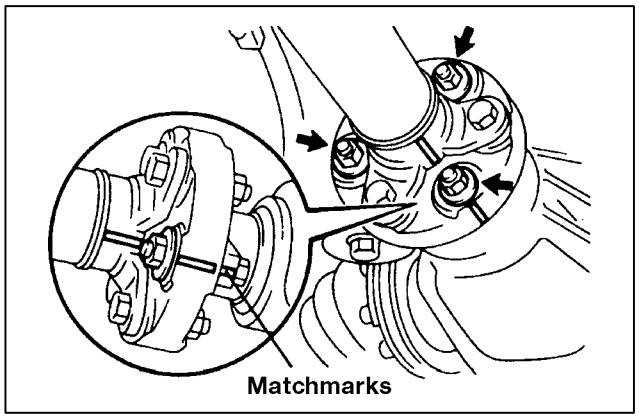

U-Joint Phase
Fig. 3-29

Body booming noise is discussed in the engine pinpoint diagnosis chart specific to causes that are engine related. In this area, pinpoint diagnosis of body booming noise conditions related to driveline are discussed.

Pinpoint Diagnosis

A visual inspection includes checking for proper U-joint phase. Fig. 3-29 shows the proper position of the U-joints on the different shafts.

On a 3-joint propeller shaft the center bearing position must be checked for vertical and horizontal alignment.

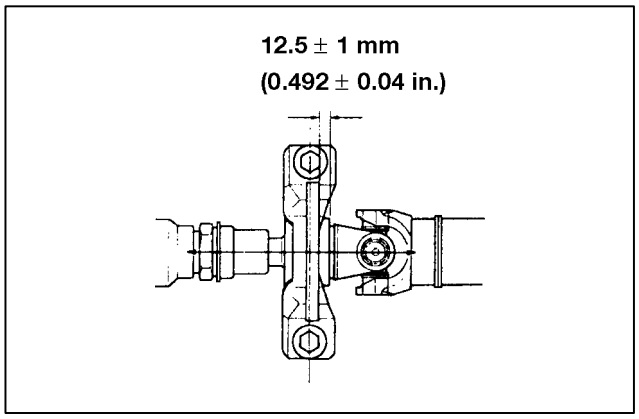

Center Carrier
Fig. 3-30

The shafts should be rotated, checking for free movement, smoothness, unusual noises or looseness. Visual inspection for alignment, damage or contact with other components such as cables or the exhaust may pinpoint the cause of the concern.

Specific details on the following are covered in Section 4 of this course:

- driveline balancing
- runout measurement and correction
- angle adjustment and repair

Pinpoint Diagnosis
Continued

Remarks

The NVH portion of the Diagnostic Tester is very helpful in isolating the source of the vibration including differentiating between balance, runout and angle conditions.

- First order (primary component) driveline vibration is associated with balance or runout conditions.
- Second order (secondary component) driveline vibration is associated with U-joint condition such as angle, tightness or looseness.

Symptom

Body Beating Noise

Description

As discussed in the engine body beating noise section, it requires two vibrations to cause a concern. The driveline is one of the possibilities to consider, especially if the NVH Analyzer indicates a strong vibration in the driveline area.

Pinpoint Diagnosis

Pinpoint diagnosis of a body beating noise is the same as the pinpoint diagnosis of the driveline for body booming noise.

Wheel Pinpoint Diagnosis

Symptom **Body Shake, Steering Flutter, and Steering Shimmy**

Description Body Shake, Steering Flutter and Steering Shimmy concerns all involve pinpoint diagnosis of the same components. The condition of the component is what determines which of the symptoms occur.

The wheels and tires are a good place to start especially if the NVH Analyzer identifies this area as the generating force of the vibration.

Pinpoint Diagnosis Tire and wheel inspection includes:

- Checking all four tires for the same manufacture, size, and specifications. Proper tire pressure is also an important item to confirm.
- Looking for damage, deformation and wear. The technician should also rotate the tire and wheel assembly, looking at both the side wall and tread, to reveal obvious conditions caused by internal tire damage, flat spots or runout.
- Feeling the tread for unusual wear patterns that may be abnormal. This will direct the technician to conditions that need to be corrected.

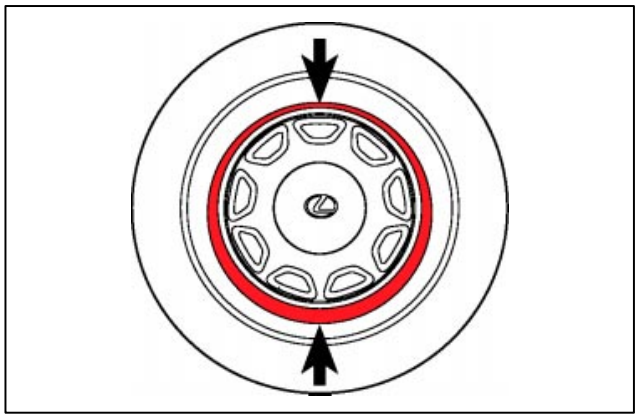

Bead Seating
Fig. 3-31

- The tire and wheel needs to be checked for proper bead seating all the way around, on both sides.

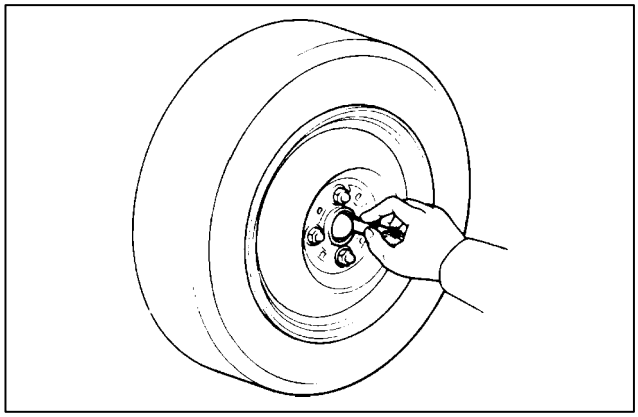

Hub to Wheel Centering
Fig. 3-32

- Hub to wheel centering is important to insure that the clearance is even and within the target value of 0.1 mm (0.004 in.) max. If the clearance is out of spec. then the wheel can be rotated to minimize the difference. If the clearance is still out of spec. then check the hub for runout to determine if the condition is in the wheel or hub.

Pinpoint Diagnosis
Continued

There are two types of runout to check on the tires, wheels and hubs:

- radial
- lateral

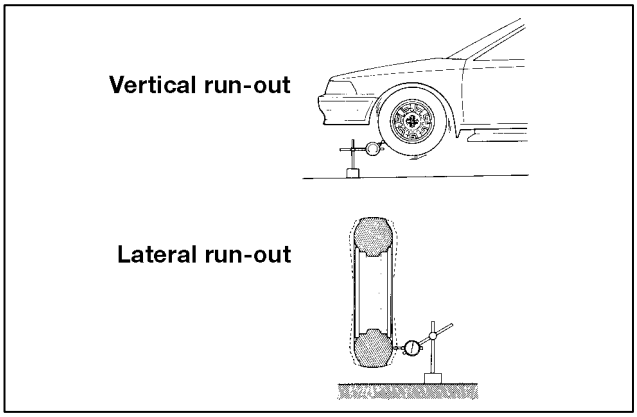

Wheel and Tire Runout
Fig. 3-33

Radial runout is the **change in the radius** as it rotates. It is measured with a dial indicator that is mounted in a stationary position, parallel with the rotating plane. Check radial runout through one complete 360° rotation of the tire and wheel assembly.

Lateral runout is the **side to side** movement.

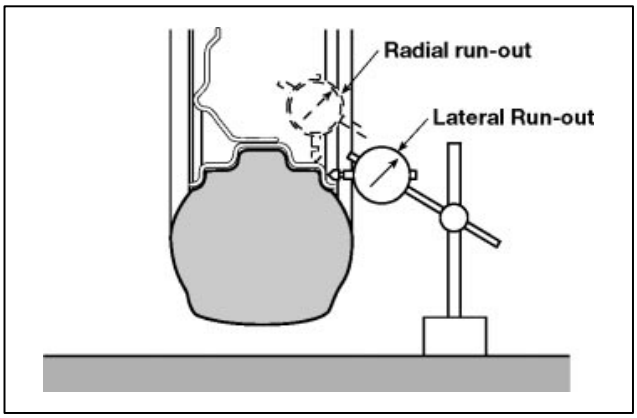

Rim and Tire Runout
Fig. 3-34

A dial indicator is used to measure the runout as the tire and wheel assembly is rotated 360°.

The balance of rotating components must be checked including the tire, wheel, hub, drum or rotor.

- Tires and wheels are commonly balanced off the car which takes into consideration irregularities of the tires and wheels
- Dynamic balancing (wheel and tire in motion) is recommended for accuracy as compared to static or bubble balancing
- On car balancing or finish balancing not only includes tires and wheels but also checks everything that rotates (ie: hub, rotor/drum and bearings).

Pinpoint Diagnosis
Continued

While performing an inspection, the technician should keep in mind components in other areas that will resonate at wheel speed. This includes many components in the steering and suspension systems.

Steering system component checks include:

- ball joint play
- leakage
- steering linkage play or damage
- steering damper condition
- condition of the rubber bushings

Suspension system components checks include:

- condition of suspension arms and bushings
- condition of the springs
- wheel bearing adjustment
- shock absorber inspection for leaks, bushing condition and proper operation

Remarks

Tire wear may cause a vibration but may be the result of another condition such as incorrect wheel alignment or worn components. The technician needs to do a thorough inspection to be sure the original cause of the condition is repaired.

Details on measuring and correcting runout are discussed in Section 4.

Details on balancing are also included in Section 4.

Symptom Description

Riding Comfort, Harshness, Road Noise, Tire Pattern Noise

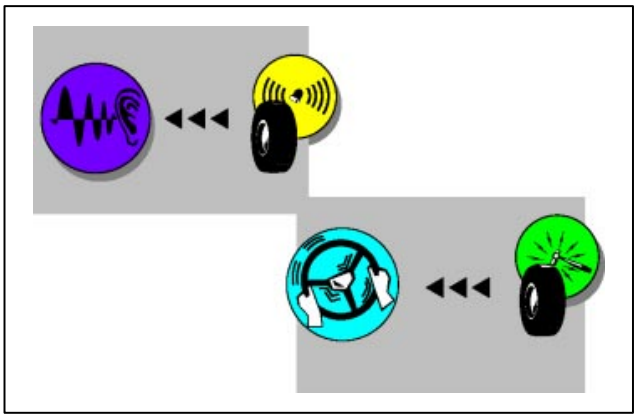

Harshness
Fig. 3-35

Riding Comfort, Harshness, Road Noise and Tire Pattern Noise are all different symptoms with different characteristics as discussed in Section 1. The generating forces in these conditions are caused by contact with the road which we have **no control or cannot change**. What we have control over is the **transmission path** of the impact through the vehicle.

The transmission path and the components to inspect are the **same for all four of the above conditions**, therefore the pinpoint diagnosis will cover the **same systems and components**.

Pinpoint Diagnosis

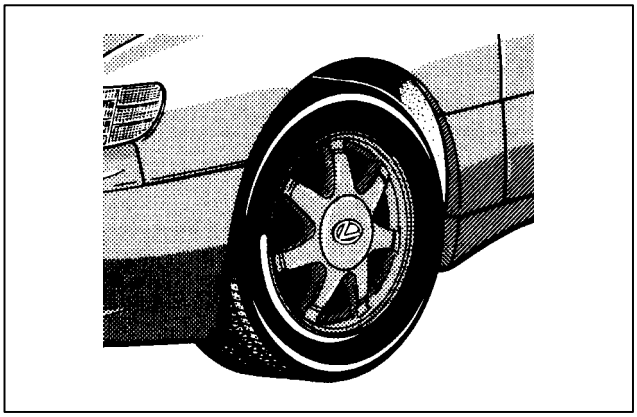

Low Profile Tire
Fig. 3-36

The components in these areas to check are also similar to the inspections discussed in previous pinpoint diagnosis of tire and wheel vibrations:

- tire and wheel
- suspension
- body sound insulators

In all pinpoint diagnosis it is important to look for changes from the manufacturer's original condition.

For example:

> Low aspect ratio/profile tires are popular for appearance to some customers. These tires do not have the same ride characteristics as the original profile tire. The customer will feel a greater impact from road irregularities.

Symptom **Brake Vibration**

Description

Brake vibration occurs only when the brakes are applied. As a result the technician can go directly to pinpoint diagnosis.

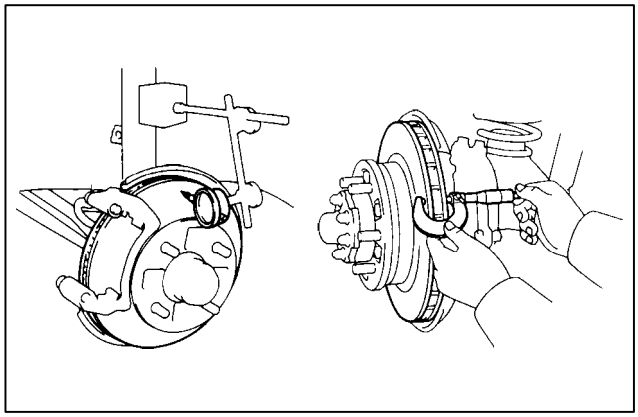

Rotor Runout and Thickness
Fig. 3-37

Pinpoint diagnosis of this condition includes inspection of the:

- pedal for lateral play
- rotor for surface condition such as rust, grooves, glazing, hard spots, evidence of overheating and evidence of poor surface condition
- rotor runout and parallelism (target value 0.1 mm (0.004 in.) or less)
- Wheel bearing adjustment and condition needs to be checked
- Pads must be checked for glazing, cracks, uneven wear and proper installation. OEM is recommended to insure the proper function and friction characteristics.
- Disc brake hardware should be checked for looseness, wear, dirt, leaks and operation.
- The surface of the wheel that mounts to the hub should be flat with no cracks. target value - 0.1 mm (0.004 in.) or less. It is important to check hub and axle runout before making corrections for rotor runout or wheel and tire runout. A bent axle will cause all of the components to indicate a runout condition if checked while on the vehicle.

Symptom **Brake Squeak**

Description

Brake squeak is associated with the contact of the pads to the rotors.

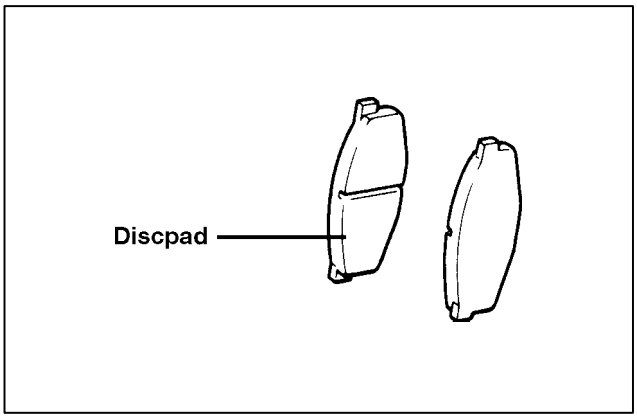

Pad and Shoe Condition
Fig. 3-40

Inspection and repair involves inspection of:

- The surface of the pads for wear, hardness, and shine.
- Pad contact, by placing them against the rotor surface and noting even contact.

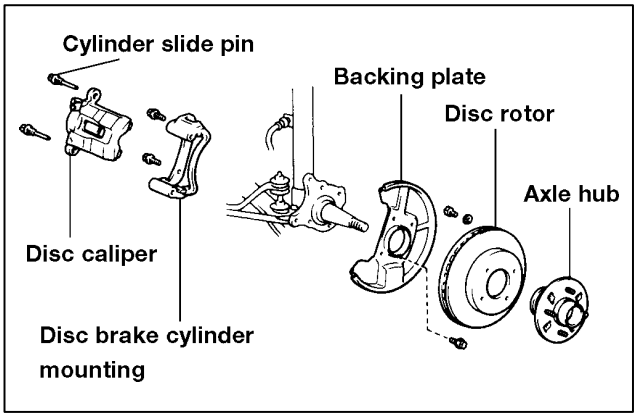

Component Condition
Fig. 3-41

- Brake component tightness including the backing plate, hub and rotor, caliper mounting and slide pins.

Pinpoint Diagnosis
Continued

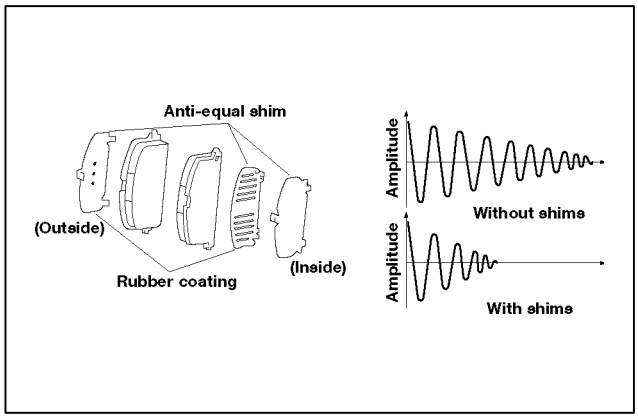

Brake Pad Anti-squeal Shims
Fig. 3-42

- Anti-squeal shims and pad support plates for assembly accuracy and damage.

Symptom
Body Booming Noise, Body Beating Noise

Description
Body booming noise and Body beating noise are symptoms that can originate from wheels and tires. Body booming noise from tire uniformity and a tire/wheel vibration can also be one of the two vibrations required for body beating noises.

Pinpoint Diagnosis
To pinpoint the cause of these conditions use the same procedures as with other wheel and tire vibration diagnosis.

Remarks
More than one tire out of balance at different pressures can be the cause of beating due to the slightly different diameters of the tires.

Section 4

NVH REPAIR TECHNIQUES

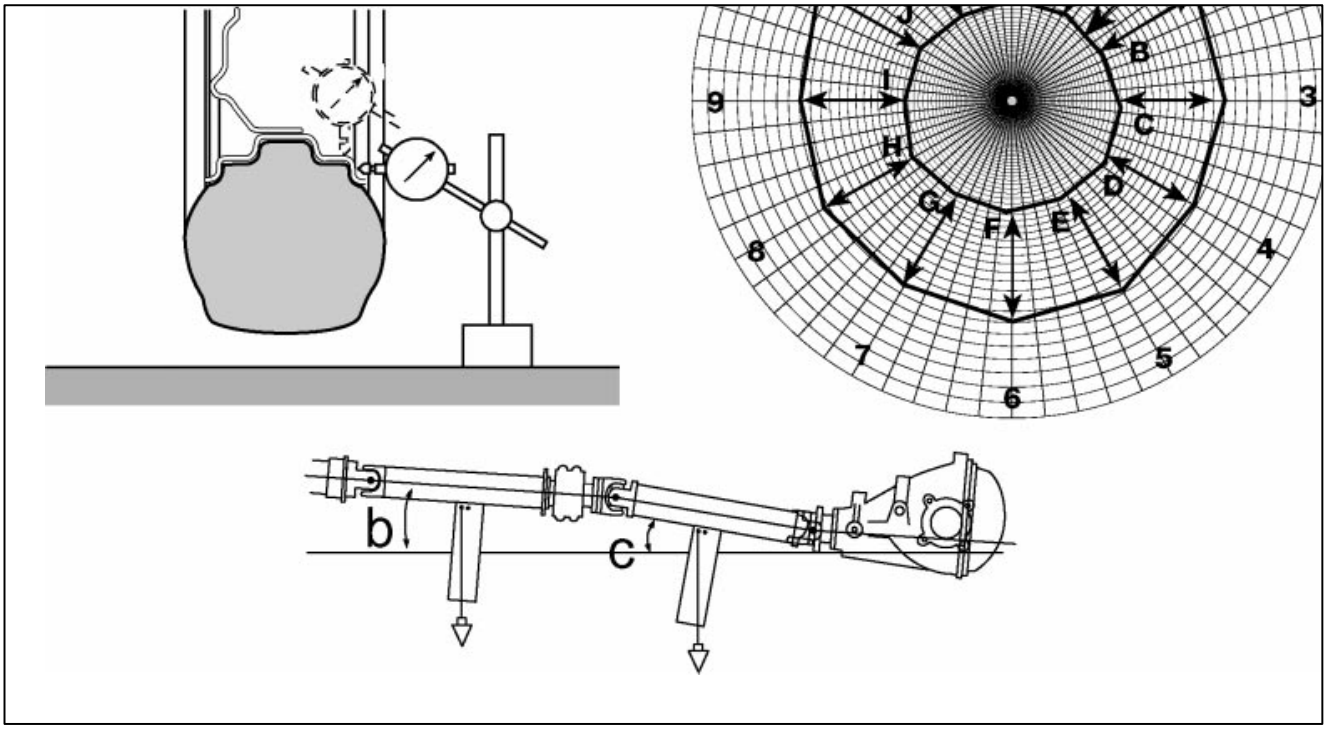

Lesson Objectives

1. Identify the common repairs specific to NVH.
2. Demonstrate the ability to use the NVH Repair Techniques Chart to select a repair technique that will quickly resolve the concern the first time.
3. Demonstrate the ability to:
   - Measure propeller shaft runout
   - Measure and correct driveline angle
   - Measure tire runout
   - Phase match a tire and rim
   - Diagnose & Repair interior & wind noise

Introduction

The repair section of the course deals with the techniques that are **specific** to NVH repairs and require **additional** information. Many of the solutions covered in Section 3 are obvious, after an inspection reveals the cause of the condition. The repair manual should be consulted for the specific procedures relating to these repairs.

For example:

> If a pinpoint diagnosis requires an inspection of a motor mount and it is found to be worn, then replacement is the obvious repair.
>
> The technician should next determine why the mount became defective, such as an oil leak causing the rubber to deteriorate. In this case the oil leak would be repaired to insure long term customer satisfaction.
>
> In both of these cases the repair manual would be the best resource for the appropriate repair procedures.

The following is the list of NVH repair techniques that are covered in this section either in the **Repair Techniques Chart**, the **worksheets** or both:

Driveline

- Propeller shaft balancing
- Runout
- Angle

Wheel and tire

- Balance
- Runout lateral/radial

Squeaks, Rattles and Wind Noise

- Diagnosis
- Repair

Repair Techniques Chart

CONDITION	DESCRIPTION
Driveline Propeller Shaft Imbalance	Propeller shaft imbalance is one of the major causes of a **first order driveline vibration**.
Driveline Runout	Runout can also cause a **first order driveline vibration**. Runout conditions can be in the shaft or in the mounting flanges/splines on the end of the shaft. It is important that both are checked before servicing the shaft.

REPAIR TECHNIQUE	REMARKS
When servicing a driveline condition be sure to perform a **thorough visual inspection** for: • component condition or damage • excessive undercoating or other foreign material • evidence of a collision which would explain component alignment conditions For example: If a U-joint is found to be worn and loose then it must be repaired before checking the runout of the shaft. Propeller shaft balancing is a technique that requires the use of specialized equipment to determine the location and the amount of the imbalance. Equipped with the details from the NVH diagnostic procedures the technician can call the AFTS (Area Field Technical Specialist) or the FPE (Field Product Engineer) with the balancing equipment for assistance. Once the location and the amount of imbalance has been determined, there are three options: • weighted bolts can be used to offset the imbalance condition • the shaft can be sent out to a specialty shop for service • the shaft can be replaced	**Always** refer to the **repair manual** for the proper procedures, specifications and cautions specific to the vehicle and components being serviced. **CAUTION:** During any propeller shaft service off the vehicle, do **not** use excessive force when clamping a shaft in a vise. Damage could result. When servicing components in a vehicle that require disconnecting part of a propeller or a driveshaft, do **not** let the shaft hang freely in the vehicle. Damage may occur to U-joints, centering pins or CV joints causing new concerns. After the repair, be sure to **perform the verification** procedures **while the balancing equipment is available** to insure customer satisfaction.
A **dial indicator** is used to measure the amount of runout. Proper mounting is important for accurate readings. It can be mounted to a solid part of the vehicle or on a stand from the floor. The dial indicator or mount should **not** move while taking readings and the indicator must be perpendicular to the surface being measured. The surface of the shaft **must be smooth and free of irregularities** such as undercoating or corrosion. Each shaft should be measured at **several locations** which will help determine the actual cause of the runout. For example: If the runout is greater in the middle than on either end then the shaft is likely the problem and should be measured on the bench in “V” blocks. If the runout is greater on one end then in the other two locations the flange should be checked for runout before servicing the shaft. If runout is determined to be associated with the mounting surface at the flanges, rotate the shaft 180° which may bring the runout within specification. If not measure the runout of the flanges to determine the problem.	Do **not** remove the flange with a hammer as damage could result. Specifications for runout and other driveline service procedures are available in the repair manual.

Repair Techniques Chart (continued)

CONDITION	DESCRIPTION
Driveline Angle	Driveline angle conditions or working angle may cause a **second order vibration**. Any vibration associated with a condition in a propeller shaft joint will be a second order vibration because the vibration occurs **twice per revolution**. A joint accelerates and decelerates twice per revolution. As the working angle increases the acceleration and deceleration rate increases causing the vibration. Correcting a vibration caused by an improper working angle involves a series of measurements on two planes to determine the angles that exist in a vehicle. The two planes are: • horizontal • vertical A constant rotation of the output shaft of the transmission changed to two accelerations and decelerations at the U-joint as the angle changes. The greater the angle the greater the change in speeds. The second joint is designed to counteract this change in speed and provide a smooth constant rotation to the differential. In order to do this the working angle must be as close to the same as possible.
Wheel and Tire Imbalance	Wheel and tire imbalance is one of the most common causes of **first order wheel vibrations**. There are three styles of balancing: • static (bubble balancing) not recommended • dynamic balancing off car • dynamic balancing on car Static balancing is a technique that was common in the past but does not provide the quality balance that a dynamic balancer is able to achieve. An on-car balancer or finish balancer will take into consideration all components that rotate with the wheel such as the hub, rotor, and axle.

REPAIR TECHNIQUE	REMARKS
Horizontal Horizontal measurements involve plumb bobs and tape to determine the **centerline** of the engine and transmission. The center line needs to be checked for position in the vehicle to determine if a condition exists such as a worn mount or a bent frame. For frame measurement, a body service technician with proper measuring equipment should be consulted. When checking the differential, the center line of the axle must be perpendicular with the center line of the driveline. Once all the measurements have been taken then the technician can determine where a deviation exists from the center line and make the appropriate adjustments to correct the condition. For example: A two piece shaft with a center carrier bearing could be misaligned at the center point of the carrier bearing. Adjusting the carrier will bring the shaft into alignment and reduce the working angle of the joints. **Vertical** Vertical measurements require an **SST 09370-50010** which measures the angle of a component in reference to a **horizontal line**. The horizontal line is established with a plumb bob or a bubble level depending on the style of tool used. The SST measures the angle of the engine/transmission, propeller shafts and the differential and compares them to each other. The object is to **cancel out** the effect of the working angles of the joints. If the working angle is found to be excessive then the technician must determine the best location for adjustment to minimize the difference in the angles. Experience with non-customer concern vehicles is very helpful in determining angles that are acceptable. Comparing these angles with those of a concern vehicle will help determine which angle should be adjusted, how far and in what direction.	A thorough visual inspection is very important to uncover clues for changes in the angles. If a condition is discovered that caused the angle change, such as collision damage, then it must be corrected before proceeding with the measurements and adjustments. The joint angle should not exceed 5°. Front and rear joint angles should be within 1/2° of each other. Vehicles that have been lowered or raised will have vibration as a result of different working angles unless considerable changes have been made to compensate for the change in height. If a customer identifies a vibration when a vehicle is fully loaded, then the customer should duplicate the load prior to taking measurements. When making measurements the vehicle has to be raised maintaining the same suspension as in the normal operating condition. This will ensure that the measurements reflect the actual working angles during normal operation.
Before balancing a tire and wheel the following should be checked: • damage or deformed tires and wheels • foreign matter on the rim especially on the inside of the rim • all the existing weights are removed • foreign material inside the tire like water, stop leak or loose rubber, especially if the balance position and weight amount changes on a re-check • the tread for plugs that may cause an imbalance or locate a broken cord • heavy or large custom and locking lug nuts While balancing a tire note the amount of weight required to balance the tire. An excessive amount will indicate a tire that should be replaced because the vibrations will never be completely resolved.	This course is an **advanced** level course and **not** intended to train the technician in tire balancing. The remarks in this section are intended to **help** the technician **pay attention to the details** that are required to ensure customer satisfaction. There are many styles of wheels and wheel weights available especially when considering the aftermarket. It is important that the proper style of weight be used on a wheel to ensure that they will stay on and not come off causing a repeat concern.

Repair Techniques Chart (continued)

CONDITION	DESCRIPTION
Wheel and Tire Runout • lateral • radial	Wheel and tire runout (lateral/radial) will also generate a **first order vibration** and can often be diagnosed with a good visual inspection if the runout is great enough. This is usually the case when there is tire damage. If the tire is damaged then replacement is the best repair.
Squeaks, Rattles and Wind Noise	Squeaks, Rattles and Wind Noise discussed in this section are those that are **not** diagnosed with the NVH Analyzer because their frequency is **above 500 Hz**. Noises below 500 Hz are discussed in Section 3. The most difficult task in servicing interior and wind noise is **locating** the source. Some noises are very illusive and seem to be coming from different areas of the vehicle depending on the customers location in the vehicle. This is caused by different transmission paths from the same source.

REPAIR TECHNIQUE	REMARKS
For runout conditions that are **not** obvious, a **dial indicator** is used to measure both radial and lateral runout. Mounting the dial indicator on a stand provides good results. A wheel adaptor for the dial indicator allows easy movement of the indicator over the rubber surface. A **smooth surface** will provide the most **accurate** readings. Lateral runout measurements are taken from the **side wall** of the tire where a smooth surface can be found. Radial runout is measured on the **tread**. Tape can be wrapped around the tread to provide a smooth surface. Radial and lateral runout can also be measured on a rim using a stand and the wheel adaptor for the dial indicator. See fig. 3-34. Some radial runout conditions can be resolved by **phase matching** the tire and rim. The use of a **radar chart** can help match the runout of the rim 180° from the runout of the tire which will minimize the total runout and the associated vibration. The tire and rim should be marked in **12 locations** and the runout recorded on the radar chart for the tire and rim corresponding to those locations. The chart will have two sets of marks one relating to the tire and one to the rim which can be connected showing the runout of each from center and their relationship to each other. The spot of the greatest runout from center should be marked on the tire and rim. Dismount the tire and rotate the tire so that the marks are 180° apart. Remount the tire and measure the radial runout with the dial indicator to determine if the total runout has been reduced. An **axle** could also be the cause of excessive lateral and radial runout. For example: A vehicle could have slid into a curb with enough force to bend the axle or spindle. A damaged wheel and tire is easily replaced by the customer without noticing the damage to the axle. A visual inspection may spot a tire and wheel that is newer than the others indicating the need for closer inspection for runout. Radial runout should be measured on the wheel lugs as well as the axle flange. Lateral runout is measured on the face of the flange. The mating surfaces of the wheel and flange should be checked to ensure a flush fit. Any contamination could cause a lateral runout condition.	The technician must keep in mind that runout, visible at the tire, can also be caused by other components such as the rim or axle.
Lexus has published an Interior and Wind Noise program to assist the technician in diagnosing and repairing interior and wind noise. The program outlines the diagnostic procedures and illustrates techniques to isolate and locate the noises. Information specific to model is available in service bulletins specific to Wind and Interior Noise.	

Notes

WORKSHEET #5
Propeller Shaft Runout

Repair Technique: **Propeller Shaft Runout Measurement**

First order driveline vibrations are commonly caused by propeller shaft **imbalance** or **runout**. **Second order** is commonly associated with **U-joint** conditions.

This worksheet will provide **practice** using the skills to **measure the runout** of the propeller shaft and companion flanges with a dial indicator. You will also determine the **best plan to resolve** the condition. i.e. component replacement or phase matching the companion flanges.

Propeller Shaft Runout Measurement

Place gauge perpendicularly to shaft

Fig. 4-1

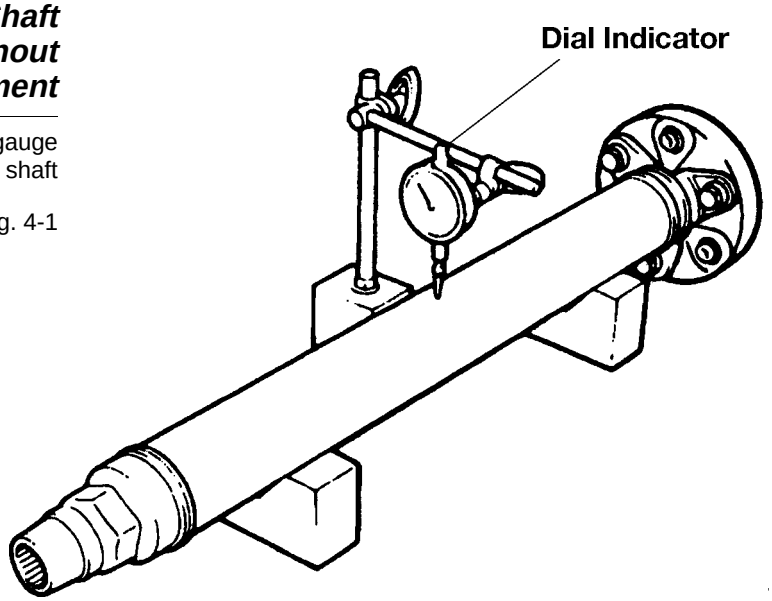

Instructions

1. Use a **dial indicator** to measure the runout of a propeller shaft in the vehicle and **record** your readings on the chart. **Mark** the rear point on the shaft of **greatest runout**.

2. **Remove** the propeller shaft, while referring to the repair manual procedures, and measure vertical and horizontal runout of the **differential companion flange**.

3. Determine if **phase matching** the shaft and the flange will improve the total runout.

4. **Measure** the runout of the propeller shaft, in the same three locations, using **"V" blocks** on the bench and **compare** your reading to those taken while in the vehicle.

5. Compare your readings to the **specifications** to determine serviceability.

LOCATION / COMPONENT	FRONT	CENTER	REAR
INTERMEDIATE SHAFT			
PROPELLER SHAFT			
In "V" BLOCKS			
	VERTICAL	HORIZONTAL	
DIFFERENTIAL FLANGE			

Questions

1. What **two** important factors must be considered when **setting up and measuring** a shaft with a **dial indicator**?

_____

_____

2. What should be checked **prior** to measuring a shaft for runout or balance?

_____

_____

3. Why is it recommended to check each shaft in **three locations**?

_____

_____

4. What are the **specifications** for propeller shaft and flange runout? List **two** locations for the specifications?

_____

_____

_____

_____

_____

Questions (continued)

5. What is your **plan of action** if you find **conflicting** specification?

6. Is there a **difference** in the readings taken **in** or **out** of the vehicle? If so, what is your **conclusion**?

7. List **two** considerations when servicing a propeller shaft.

8. What **areas** should be checked for runout in **addition** to the ones measured in the worksheet?

9. Which runout measurement **location** on the propeller shaft is most likely to indicate a possible **companion flange runout condition**? Explain.

10. What is the **advantage** of **marking** the **high point** on the **rear** of the propeller shaft?

11. If the high point is near the original high point after phase matching what is your **conclusion**?

Notes

WORKSHEET #6A
Propeller Shaft Angle Measurement and Adjustment

Vehicle	Year/Prod. Date	Engine	Transmission

Description: **Vertical Joint Angles**

A propeller shaft angle condition is one of the causes of a **second order** driveline vibration. Angle measurement and adjustment involves the use of the **SST 09370-50010** and **shims**.

This worksheet is designed to provide **practice** in propeller shaft measurement and adjustment using the resources mentioned above.

Instructions

Vertical angle Measurement

Fig. 4-2

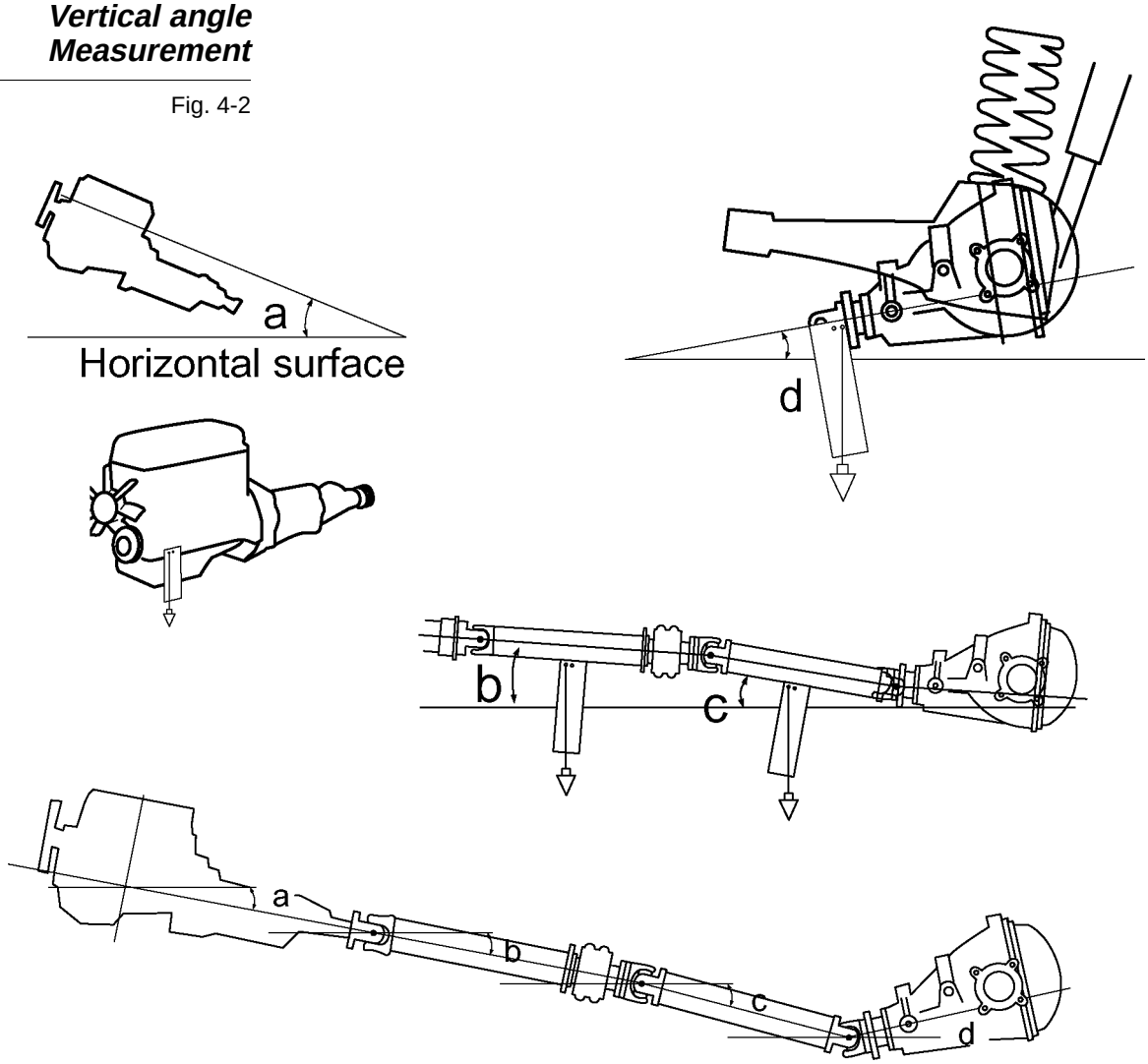

Measurement

1. Refer to the Repair Manual, PR section, for the vehicle assigned to you by your instructor.
2. Follow the procedures for measuring the angles and record your results below.

NOTE This worksheet includes the measurement of the engine to intermediate shaft angle not found in the RM.

COMPONENTS	ANGLE OF INCLINATION	JOINT ANGLE
A. ENGINE		
B. INTERMEDIATE SHAFT		**A - B =**
C. PROPELLER SHAFTS		**B - C =**
D. DIFFERENTIAL		**C - D =**

Questions

1. What **lift points** did you choose to maintain the suspension height while raising the vehicle?

   _____

   _____

2. What are the **increments** between the degree marks on the scale?

   _____

3. How do you know if the **angle** is positive or negative?

   _____

   _____

4. Does it **make a difference** which component you measure first when using the angle gauge?

   _____

   _____

Questions (continued)

5. What are the **specifications** that are acceptable? _____

   Where did you find this information? _____

   _____

6. How do your results **compare** to the specifications?

   _____

   _____

Correction

1. **Correction** is done by adjusting the, **center support bearing** or **differential**. The engine and transmission mounting should also be checked for conditions such as damage or wear that could contribute to a change in the driveline angle.

2. The repair manual will also provide the details for correction and the use of shims to change the angle.

3. Perform the **verification procedures** discussed in Section 3 to ensure the condition has been **corrected**.

Questions

1. What adjustments should be made to the following?

Engine mounts:	Up or Down
Rear transmission mounts:	Up or Down
Center carrier:	Up of Down
Differential:	Up or Down

2. What is the relationship between the thickness of the shim and the change in the joint angle? i.e. thousandths vs. degrees.

   _____

   _____

3. What determines this relationship between shim thickness and angle in question #2?

   _____

   _____

4. Did the condition improve after the adjustment?

   _____

Notes

WORKSHEET #6B
Propeller Shaft Angle Measurement and Adjustment

Vehicle	Year/Prod. Date	Engine	Transmission

Description: **Horizontal Joint Angles**

Horizontal joint angles can have the same impact on vibration as the vertical joint angles but are more difficult to measure. Due to the acceleration and deceleration of a joint as it rotates it is important to ensure that the working angles cancel these changes in speed and provide a smooth output and no vibration.

The following sheet is designed to provide instruction and practice in measuring and correcting these horizontal joint angles.

Instruction

Horizontal Propeller Shaft angle

Fig. 4-3

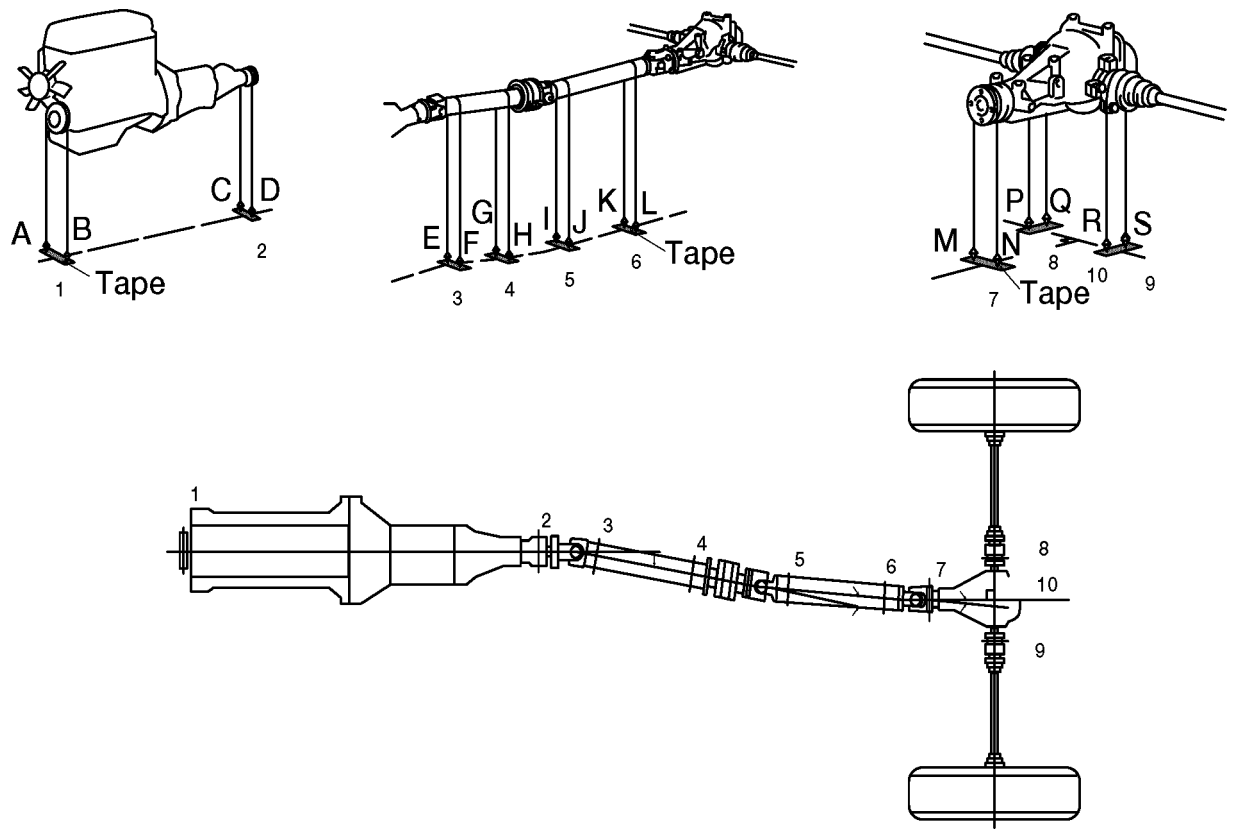

Measurement Instructions

Engine

1. Raise the vehicle **maintaining** the same suspension system **load** and **position** as when the condition exists.
2. **Drop** a **plumb line** from the **crank pulley** and place a strip of **tape** under the plumb points. **Mark** the plumb points **A** and **B** on the tape.
3. Determine the **mid-point (1)** between points **A** and **B**.
4. Drop a plumb line from the **transmission extension housing** and place a strip of tape under the plumb points. Mark the plumb points **C** and **D** on the tape.
5. Determine the **mid-point (2)** between points **C** and **D**.

Intermediate and Propeller Shafts

6. Use the **same** techniques outlined above to determine the **mid-points** of the ends of each shaft.

   mid-point (3) of E and F

   mid-point (4) of G and H

   mid-point (5) of I and J

   mid-point (6) of K and L

Differential

7. The **same** techniques are used to measure the **companion flange** and both **axle housings**:

   mid-point (7) of M and N

   mid-point (8) of P and Q

   mid-point (9) of R and S

8. **(10)** is the **perpendicular intersection** of the center line formed with (8) - (9) and the pinion drive through (7).
9. **Connect** all center lines with **thread**.
10. Place a **protractor** on the thread at joint angle (A), (B) and (C) to **measure the angles**. Record your readings on the chart.

COMPONENTS	JOINT ANGLE
ENGINE/INTERMEDIATE SHAFT	**(A)**
INTERMEDIATE/PROPELLER SHAFTS	**(B)**
PROPELLER SHAFT/DIFFERENTIAL	**(C)**

Correction Instructions

1. **Adjust** the **engine** center line (1 - 2) and/or **differential** center line (7 - 10) to make them **parallel** to each other and joint angles (A) and (C) **equal**.

2. Adjust the **center lines** of the engine, intermediate shaft, propeller shaft, and differential to make them as **straight** as possible and **reduce** joint angle (A) and (C).

3. Perform the **verification procedures** discussed in Section 3 to ensure the condition has been **corrected**.

Questions

1. List what could cause the horizontal angle to change.

_____

_____

_____

_____

2. List the components and angle that would be effected.

_____

_____

_____

_____

_____

_____

3. What is the value of using a protractor in this worksheet?

_____

4. What type of vibration would you read on the NVH Analyzer with a horizontal joint angle condition?

_____

WORKSHEET #7
Tire Runout Measurement and Phase Matching

Repair Technique: **Tire Runout Measurement and Phase Matching**

Runout can be one of the causes of tire and wheel vibrations, though not as common as balance. The technician has to be able to determine the **amount of runout**, the **component** causing it and if it can be **resolved** through phase matching or component replacement.

The following worksheet is designed to provide **experience** in:

- **Measuring** the runout of a tire and rim.
- Using the **radar chart** to determine relative location of the tire and rim runout.
- Determining component **serviceability**.

Radar Chart, Tire and Wheel

Fig. 4-4

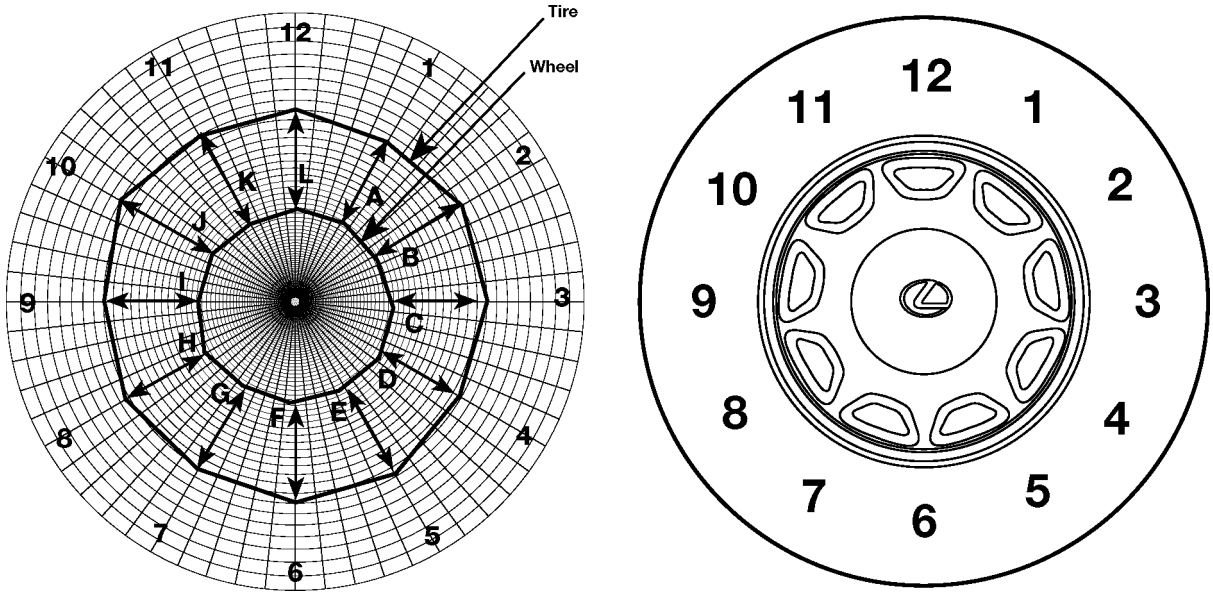

Instructions

1. Mark the tire into twelve **equal** segments.
2. Use a **dial indicator** to measure the **lateral** and **radial** runout of the tire and rim.
3. **Record** the readings from the **twelve** locations on the **radar chart** for both the tire and rim (attached). Use the “twelve” position on the tire and chart as the **“0”** point for the **dial indicator**. Each eleven positions will be **plus** or **minus** from that point.
4. Record the readings for the **rim** using a location on the chart **inside** the readings for the tire.
5. Draw lines to connect the readings in the twelve positions for the tire and rim.
6. **Dismount** the tire and **remount** lining up the **lowest** position of the rim with the **highest** position of the tire to achieve the **lowest** possible **total** runout.
7. **Remeasure** the total radial runout and determine **serviceability** of the tire and wheel.

	TOTAL RADIAL RUNOUT BEFORE PHASE MATCHING	TOTAL RADIAL RUNOUT AFTER PHASE MATCHING	LATERAL RUNOUT
TIRE			
RIM			

Questions

1. Is it possible for a tire to indicate **excessive runout** and have **nothing** wrong with the tire? Explain.

   _____

   _____

   _____

2. **List** the components that could cause the condition in question #1.

   _____

3. What is the **specification** for checking the **wheel centering** with the hub or axle flange? Where did you find it?

   _____

4. What **impact** would wheel centering have on runout? Which one, lateral or radial?

   _____

5. How would you guard against a **flat spot** effecting your readings? Which readings would be effected, lateral or radial?

   _____

Questions (continued)

6. What makes a good **reference or starting point** when measuring runout?

_____

7. Why is it important to make sure the reference point for the tire and rim measurement are the **same** on the chart?

_____

_____

_____

8. How is the **high** and **low** points of the tire and wheel **determined** once the radar chart is completed?

_____

9. Can you **predict** what the total runout will be **after** phase matching the tire and rim using the information on the completed chart?

_____

_____

_____

10. What is the **value** of predicting the total runout?

_____

_____

Notes

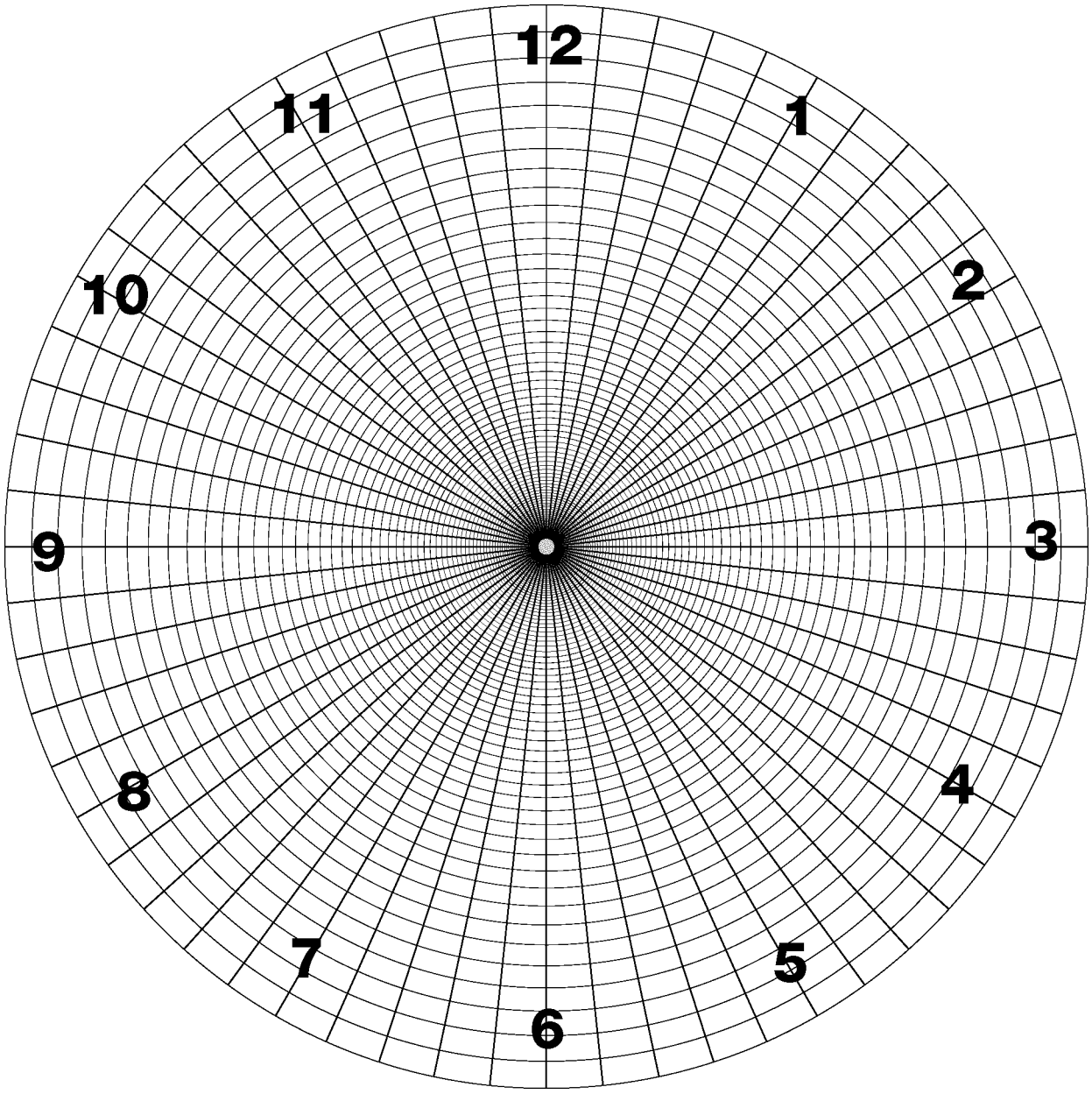
12
1
2
3
4
5
6
7
8
9
10
11

WORKSHEET #8
Interior and Wind Noise

Interior and wind noise concerns are usually not as difficult to repair as they are to **find**. The difficulty in finding the source of a noise is caused by the many possible **transmission paths** of the noise. As a result, people sitting in different locations in the vehicle will have different opinions on the location of the noise.

Lexus has published **two** excellent programs to assist the technician with diagnosing and repair of these conditions.

- Interior Noise
- Wind Noise

This worksheet is designed to **familiarize** you with these programs and the skills required to successfully resolve interior and wind noise concerns.

Interior and Wind Noise Program

Fig. 4-5

Instructions

1. Review **both** the Interior and Wind Noise programs to become familiar with:
   - The contents
   - Diagnostic procedures
   - Repair techniques
   - The specification
   - Service tips
   - Check sheets
   - Body fit standards
   - Materials, tools and equipment
2. Use the diagnostic **skills** developed in this course, your **experience** in noise diagnosis and repair and the **information** above to answer the following questions.

Questions

1. What is the **frequency range** of wind noise?

   _____

2. What are the **two conditions** that effect wind noise?

   _____

3. At what **speed** does wind noise normally occur?

   _____

4. Why do the windows need to be **shut**?

   _____

   _____

5. What are the **two** major **vibrating forces** of wind noise?

   _____

6. What should a **visual inspection** include for wind noise?

   _____

7. What are **two** important characteristics of the **tape** used to diagnose the wind noise?

   _____

Questions (continued)

8. What are **two** values of the **check sheets** in the wind noise program?

_____

_____

9. What is the **body fit standard** for the gap between the top of the door and the roof line on a LS400?

_____

10. What is the **advantage** of having **more than one person** involved during the road test of a noise?

_____

11. What is the **part number** for the **kit** available to repair noise concerns?

_____

12. What is the value of the **service tips section** in the interior noise program?

_____

_____

Summary

This section **completes** the information required to successfully resolve most NVH concerns. You should have:

- A strong background in NVH principals and theory
- A diagnostic procedure including
  - Verification of the customer concerns
  - Classification of the symptom
  - A road test procedure with the NVH Analyzer
- A pinpoint diagnosis procedure
- NVH repair techniques

Success in NVH service and repair will require **practice** honing the skills developed in this course. Practice will provide the **experience** necessary to quickly resolve NVH concerns the first time and ensure **long term customer satisfaction**.

Appendix A

Customer Interview Sheet

CUSTOMER INTERVIEW SHEET

INSTRUCTIONS

The interview should be conducted and the sheet filled out by personnel trained in NVH diagnosis.
Please fill in or check all areas with the appropriate response, enter N/A if it does not apply.
The details collected during the interview are critical in successfully resolving the concern.

CUSTOMER DATA

Name: _____ Date: _____

Telephone #: _____ RO #: _____

VEHICLE DATA

Model/Year: _____ Mileage: _____

VIN #: _____

Is the customer the primary operator of the vehicle? ❍ Yes ❍ No

NVH DATA

What type of condition is the customer experiencing? ❍ Noise ❍ Vibration ❍ Harshness (ride quality)

Is the condition constant? ❍ Constant ❍ Intermittent

When did it start? ❍ While in Service ❍ Since New ❍ Gradually ❍ Suddenly

❍ Other _____

NOISE

Describe the Noise: ❍ Squeak ❍ Rattle ❍ Wind Noise

When does the noise seem to be the loudest or most frequent? _____

_____

Mark the location of the noise on the illustration (reverse side of this form).

VIBRATION

Where is it felt:

❍ Steering Wheel ❍ Floor ❍ Seat ❍ Instrument Panel
❍ Brake Pedal ❍ Console ❍ Accelerator Pedal
❍ Shifter ❍ Body ❍ Mirrors ❍ Clutch Pedal

Describe the vibration:

❍ Vertical ❍ Horizontal ❍ Rotational
❍ Other: _____

HARSHNESS (Ride Quality)

Where do you experience it? _____

When do you experience it? _____

Has the vehicle ever been damaged? ❍ Yes ❍ No If so, please indicate where on the illustration.

Is there any relevent service history? ❍ Yes ❍ No If so, please describe: _____

Has there been any accessory installation ? ❍ Yes ❍ No _____

Is the vehicle used for towing or to carry any cargo or equipment? ❍ Yes ❍ No _____

LOCATION INDICATOR

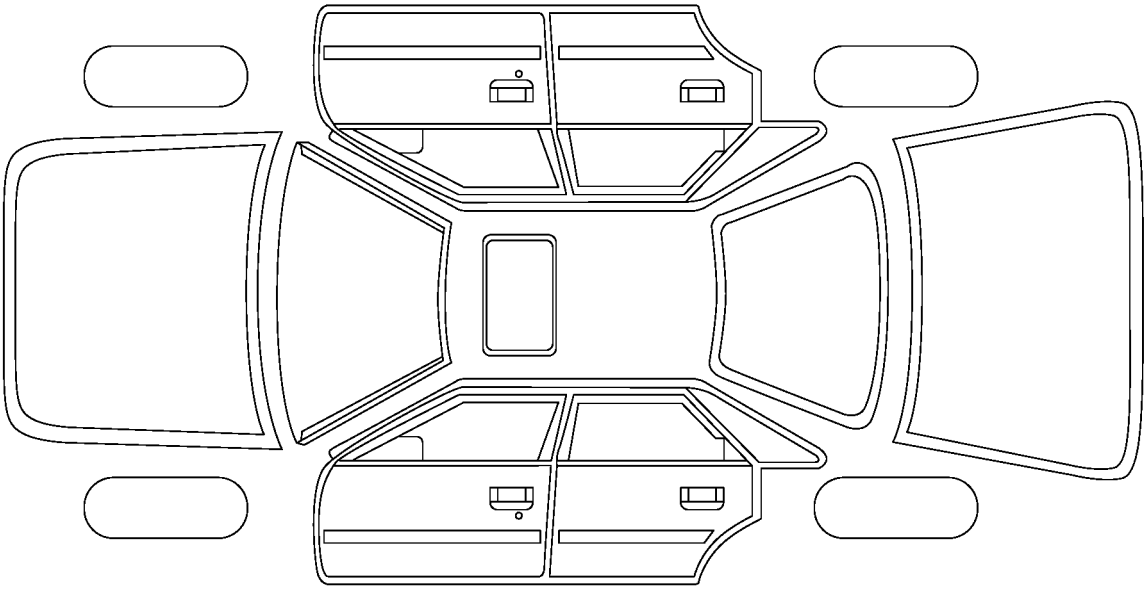

OPERATING CONDITION

When does the condition occur? ❍ Starting ❍ Idling ❍ Cruise ❍ Coasting ❍ Other _____

Vehicle Speed (MPH): _____ Engine Speed (RPM): _____

❍ Cornering Left ❍ Cornering Right ❍ Acceleration ❍ Deceleration

❍ Braking ❍ Clutch Engagement ❍ Other _____

Accessories: ❍ HVAC ❍ 4WD ❍ Audio ❍ Other _____

Engine Temperature: ❍ Cold ❍ Normal ❍ Hot

Road Conditions: ❍ Highway ❍ Suburb ❍ City

Road Surface: ❍ Asphalt ❍ Dirt/Off Road ❍ Concrete with Expansion Joints

❍ Undulating ❍ Other Irregularities

Explain: _____

WEATHER CONDITIONS

Temperature: _____ °F ❍ Clear ❍ Rain ❍ Ice/Snow ❍ Wind

❍ Other _____

ADDITIONAL INFORMATION

_____

_____

_____

_____

Appendix B

Classification Flow Chart

CLASSIFICATION FLOW CHART

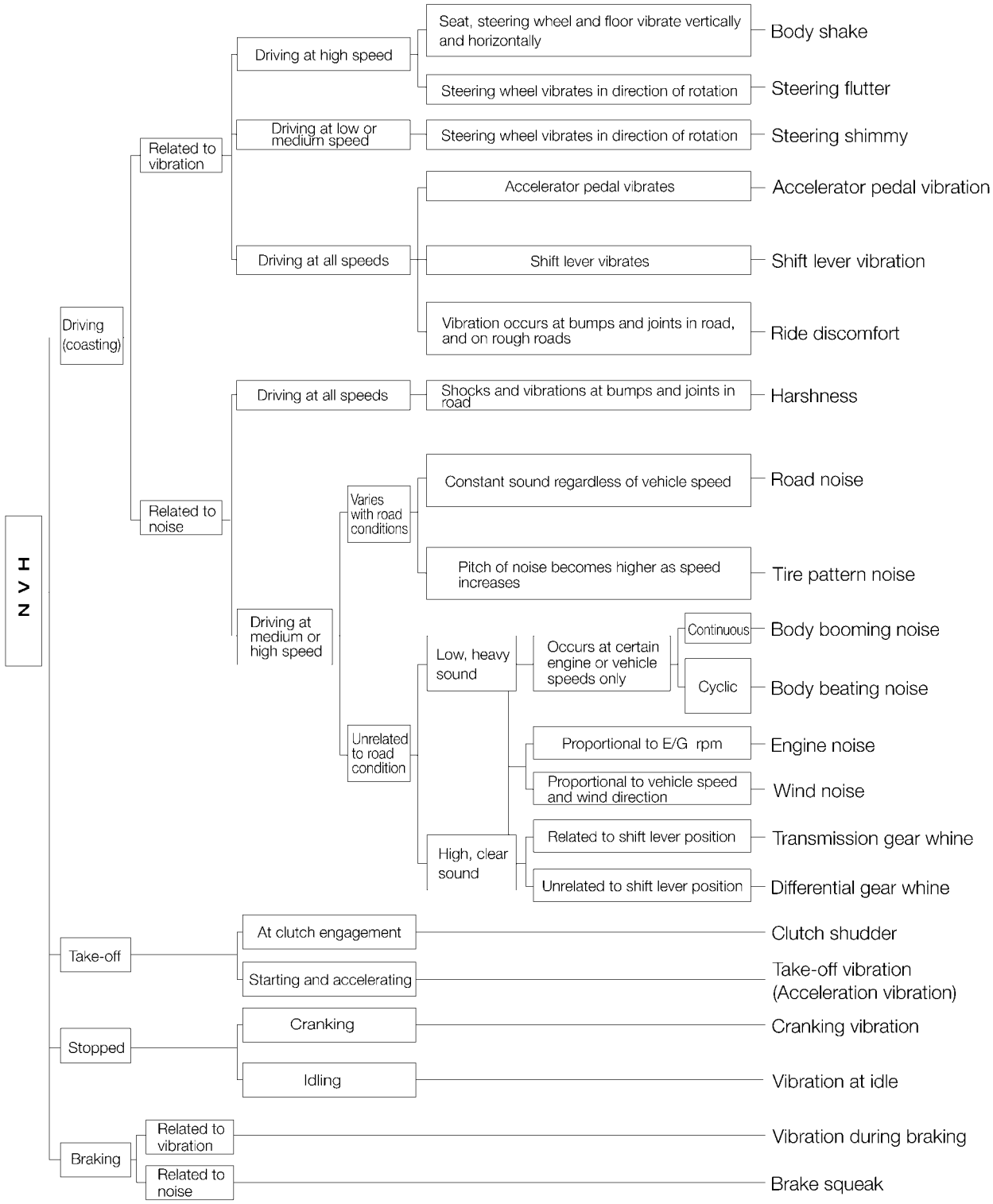

Appendix C

Radar Chart

RADAR CHART

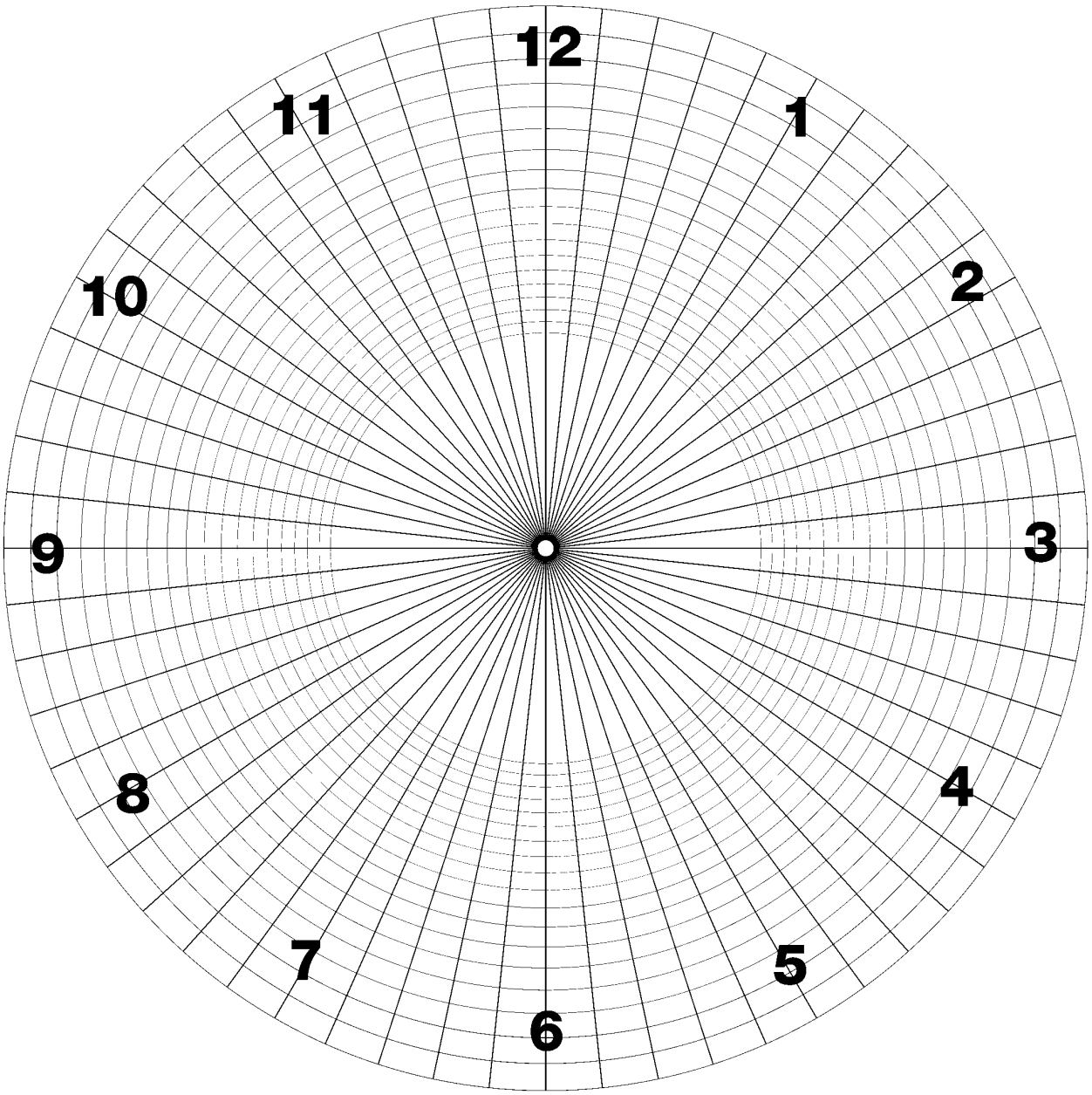

Appendix D

GLOSSARY OF TERMS

A

Acceleration - The rate in change of velocity with respect to time.

Accelerometer - A mechanical device that senses vibration (acceleration) and sends an electrical signal to a signal conditioner in proportion to the acceleration.

Amplitude - The quantity used to express the level or magnitude of a vibration. When expressed in dBg (Decibels g) it relates closely to what the customer feels.

Aspect ratio - A ratio of the section height of a tire over the section width of a tire. Another term is series, a 75 series tire is 75% as tall as it is wide.

Attenuate - To reduce in force, value or amount; weaken.

B

Beating - A cyclical vibration or sound at in an operating vehicle that is the result of two vibrations or sounds of similar frequency.

Booming Noise - A constant sound or pressure on the ears of relatively low frequency (30 - 200 hz).

Buzz - A term used to describe a sound similar to a ballast in a fluorescent light.

C

Centrifugal Force - The force or pull from the center of a rotating object.

Component - (see order)

CPS - Cycles Per Second

Cycle - A single complete execution of a periodically repeated event. It is often timed.

D

Dampen - To decrease the amplitude of a vibration or sound. To eliminate or progressively diminish oscillations. A means of dissipating vibration energy in a vibrating system.

Data Link - A communication link between a vehicle computer and a diagnostic tester.

Deceleration - Slowing of an object velocity. i.e. Slowing of a vehicle when the accelerator is released with engine compression adding to the resistance and no brake application.

Decibel (dB) - A unit of measurement used to compare the quantity of power or intensity of sound level to other quantities. The comparison is expressed logarithmically which is similar to what humans sense.

Drone - A continuous low dull humming or buzzing sound.

Dynamic Damper - A device attached to a vibrating system (with rubber or a spring) that changes the natural frequency and resonant point of the vibrating system. It moves independently, introducing a second vibration of opposite phase. The result is two vibrations of lower amplitude with different resonant points than the original vibration. The advantage is that the new resonant points will likely be outside the normal vibrating forces in the vehicle.

F

Forced vibration - A sustained vibration of a vibrating system from a continuing, cyclical, external force. The system will vibrate at the same frequency as the external force.

Free vibration - A vibration that continues after the external force has been removed.

Frequency - The number of times a specific phenomenon occurs within a specified interval. The number of complete cycles occurring in a second (Hertz Hz).

H

Harshness - Vibration generated by impact force acting on the tires and transmitted through the suspension system to the car body as the vehicle moves across road irregularities.

Hertz (Hz) - A unit used in the measurement of frequency. 1 Hertz (Hz) = 1 Cycle Per Second (CPS) of a vibrating or rotating object.

Howl - A low frequency sound similar to a differential with a bad bearing.

Hz - Hertz (Cycles Per Second)

I

Imbalance - Out of balance; unequal distribution of weight around a rotating object or component, causing a vibration.

J

Judder - A term commonly used to describe a low frequency vibration on a clutch on engagement. 10-20Hz

L

Lateral force variation (LVF) - A measure of tire uniformity in variations of lateral force.

Lateral runout - Deviation from side to side of a rotating component. Measured with a dial indicator parallel with the axle.

M

Mass Damper - A mass fixed to a component to change the natural frequency of the component.

N

Natural frequency - The frequency that a vibrating system will vibrate when set into free vibration.

Noise - A term used to describe a sound that is unpleasant to the senses.

NVH - Noise, Vibration and Harshness

O

Order - Vibrations that are multiples of other existing vibrations. For example a second order vibration is twice the frequency of the first order. A third order vibration is three times the frequency as the first.

Oscillation - To move between alternate extremes in a definable period of time.

P

Phase - A quantity to indicate position within a period of periodical event. The relationship of one rotating component to another at the same frequency, such as the position of two U-joints on the same shaft or the position of the high and low spots of a tire and rim.

Phenomenon - An occurrence that is directly perceptible by the senses.

Pitch - An auditory sensation that enables one to locate a sound on a scale from low to high. It is determined by frequency the higher the frequency the higher the pitch.

Pulsation - A low frequency, periodic throbbing that can be heard or felt.

R

Radial force variation (RFV) - A measure of tire uniformity in variation of load acting toward the tire center.

Resonance - A phenomenon of maximum amplitude or level caused by the sum of energy when the natural frequency and the frequency of the vibrating force are the same.

Road Test - Operation of a vehicle under conditions designed to recreate the complaint condition.

Roughness - A harsh irregular vibration, similar to the vibration of an engine with a miss-fire.

Rumble - A low, heavy, muffled, continuous reverberating sound. Similar to thunder.

Radial Runout - Deviation in the plane of rotation of a rotating component. (eccentricity) Measured with a dial indicator mounted perpendicular to the axle.

S

Shake - Refers to a major vertical and/or lateral vibration of the body, seats and steering wheel 10-30Hz. (vertical and lateral vibrations may occur alternately)

Shimmy - A low frequency vibration of the steering wheel along the direction of rotation. 5-15 Hz

Static - Having no motion, at rest.

T

Tolerance - Leeway for variation from a standard. Deviation from a specified value of a structural dimension.

Transmission System - The path for a noise or vibration to travel from the source to the occupants of a vehicle.

V

Vibration Analyzer - A tool used to sense and display vibration. The vibrations are displayed according to frequency and amplitude.

Vibrating Force - An external force on a vibrating system that puts the system into motion.

Vibrating System - A group of components that respond to an external force and produce a vibration or sound that can be sensed by the occupants of a vehicle.

W

Working Angle - The angle formed by two rotating components such as a transmission and a propeller shaft.

Appendix E

INDEX

A

Acceleration test (see light or heavy acceleration test)

Accelerator pedal vibration 40

Accelerometer 14, 79, 112, 121

Amplitude 13, 85, 86, 109

Angle (see driveline angle)

B

Balance (see driveline or wheel balance)

Beating 27, 28, 42, 43, 153

Body Beating Noise 42, 153, 157, 164

Body Booming 42, 43, 76, 152, 156, 164

Body Shake 40, 41, 158

Brake Squeak 44, 163

Brake Torque Test 114

Brake Vibration 44, 45, 162

C

Case Study 51, 59, 76, 129, 130, 136, 137, 139

Centrifugal force 30, 31

Classification 70, 198
- Classification Flow Chart 71, 99, 120

Clutch judder 44, 146

Components of a vibration (see order)

Crank Vibration 151

Cursor 110, 111, 122

Customer Interview Sheet 54, 55, 56, 57, 58, 61

Cycle 8, 9, 42, 43

Cycles Per Second (see Hertz)

D

Dampening 16, 18, 41

Damper 25, 26

dB, dBg (see decibel)

Decibel 15

Default position 109, 111

Differential Gear Whine 44, 45, 154, 155

Driveline Angle 170

Dynamic damper 25, 26

E

Engine noise 42, 43, 144

Engine Run-up Test 114

F

Frequency 4, 9, 10-13, 16, 18, 20, 25-27, 31, 33, 34, 36-38, 40-44, 108
- Frequency band width 108

G

g (see decibel)

Growl (see beating)

H

Harshness 35, 40, 41, 56

Heavy Acceleration Test 115

Hertz (Hz) 4, 10

I

Idle Vibration 44, 151

Interior Noise 43, 112, 173, 195

Interview sheet (see Customer Interview Sheet)

J

Jack stand diagnosis (see safety diagnosis)

Jounce Test 116

L

Lateral runout (see wheel runout)

Level (see amplitude)

Light Acceleration Test 114

M

Mass Damper 25, 140

Microphone 112, 125

N

Natural Frequency 16, 18, 25

Noise 3, 24, 42, 56, 112, 113

NVH Analyzer Displays 102

NVH Analyzer Set-up 81

NVH Symptoms 38

O

Oscillation 7

P

Phase 27, 32, 150, 156

Phase Matching 173, 189

Phasing 28

Pinpoint Diagnosis 34, 37, 133, 136, 140-142, 145-159, 164

R

Radical runout (see wheel runout)

Rattles 112, 167, 172

Resonance 17
- Resonance Point 17, 18, 19
- Resonance System 22, 25, 26

Riding comfort 40

Road noise 40, 41

Road Test 37, 77, 113, 117, 119, 125

Runout (see wheel or propeller shaft)

S

Shift lever vibration 40, 141

Simulation software (see NVH simulation software)

Sound (see noise)

Sound generator (see vibrations)

Squeaks 112, 172

Steering Flutter 40, 158

Steering shimmy 76, 136, 137, 158

Symptoms (see NVH symptoms)

T

Take-off vibration 44, 45, 149

Technical assistance 52, 138

Tertiary component (see order)

Tire Balance (see wheel balance)

Tire pattern noise 4

Transmission gear whine 44, 45

Transmission Path 22-24, 35, 41

Transmission System 21, 22

V

Verify the Concern 49, 61

Vibrating element 21, 24

Vibrating force 41, 43

Vibrating force 6, 24, 41

Vibrating System 6

Vibration 3, 6, 56, 134, 139, 153, 157

Vibration analyzer 12, 14, 79

Vibration Measurement 13

Vibrator 22

Visual Inspection 35, 49, 133-135, 171-173

W

Wheel balance 137

Wind Noise 172, 195

Wind noise 42, 173

Working angle (see driveline angle)

Section 1

Electrical Circuit Theory

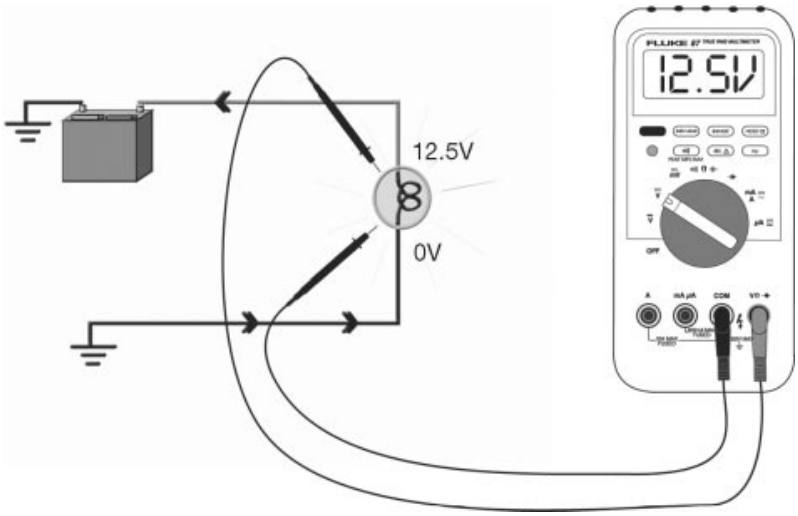

Learning Objectives:

1. Review the basic electrical concepts of voltage, amperage, and resistance.
2. Review the components of a basic automotive electrical circuit.
3. Introduce basic wiring diagram symbols.
4. Review the characteristics of voltage, amperage, and resistance in series and parallel circuits, showing how they are used when diagnosing electrical problems.
5. Show how series-parallel circuits are used on the vehicle.
6. Introduce the basic electrical diagnostic tools.

Notes

Introduction

The first step in being able to effectively diagnose electrical problems is to have a good understanding of basic electrical principles. These concepts were covered in depth in the L623 course. In this course, we will be reviewing each of them with emphasis to their on-car applications and how these concepts are applied when you are diagnosing an electrical problem.

Electrical Circuit Diagnosis Course L623

Course L623 covered the "basics" of electrical. This course will expand on those concepts and apply them directly to the on-car diagnostic process.

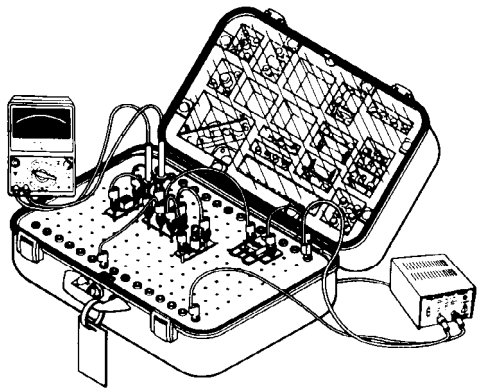

Fig. 1-1
L652f101

Voltage

Simply put, think of voltage as **electrical pressure** or pressure differential. The difference in pressure that makes any hydraulic pump work is virtually the same for electrons. The pressure differential provided by the positive and negative terminals of the battery causes the electrons in a conductor to move when the two terminals are connected together.

This movement or flow of electrons is used to perform useful work. Whenever work is done, pressure is used up. We can measure where work is done in an electrical circuit by measuring where voltage is used up.

Voltage as Pressure

Like the pressure/suction that a pump provides a fluid, a battery or alternator provides for an electrical circuit.

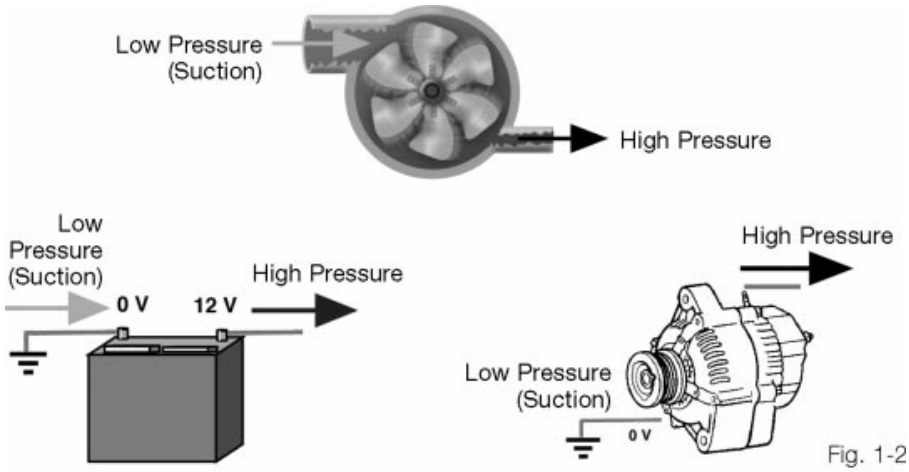

Fig. 1-2
L652f102

When working with on-car electrical problems, there are two different methods of voltage measurement. A Technician can either measure an open circuit voltage or a voltage drop. **Open circuit voltage** is measured when there is no current flow through the circuit. A **voltage drop** is measured dynamically while there is current flow through the circuit. Both open circuit voltage and voltage drop testing have their place in the diagnostic process. Information from each measurement can be helpful if used appropriately. These two measurements will be discussed in more detail in the **Electrical Diagnostic Tools** section of this course.

Measuring Open Circuit Voltage

This measurement tells you if there is voltage present at a terminal. It cannot tell you if there is any circuit resistance up to that point.

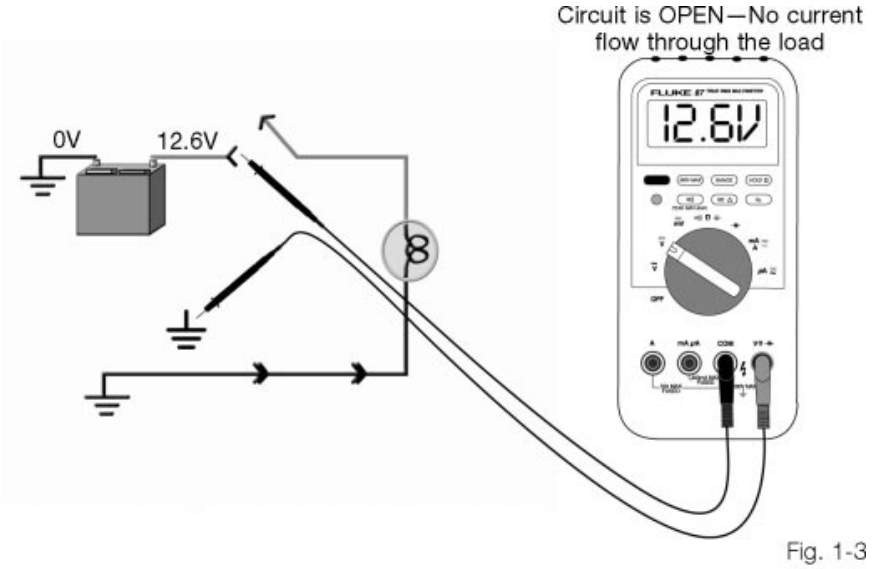

Fig. 1-3
L652f103

Measuring Voltage Drop

This measurement can only be done if there is current flow in the circuit. It accurately tells you how much voltage is actually available at the load, or the amount of voltage lost across connections or wiring on either the ground or power side of the circuit.

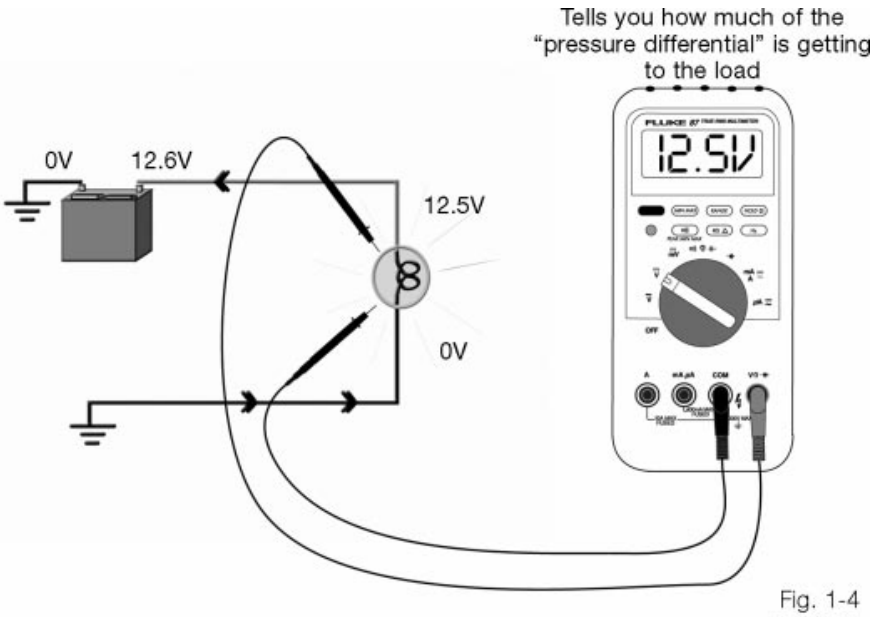

Fig. 1-4
L652f104

Voltage Drop

Whenever current passes through any component, voltage is used up. The voltage used up is called Voltage Drop (ΔV).

NOTE

Δ is the Greek letter delta. The symbol delta means “change in”. When we use the abbreviated DV it indicates “change in voltage” or Voltage Drop.

The voltage drop (ΔV) of a component is directly proportional to the resistance of the component. The greater the resistance the greater the voltage drop (ΔV). Low resistance components like fuses, switches, wires and connectors should have very low ΔV. As a general rule the maximum ΔV allowed for these components is less than 0.1V per component or connector.

Higher resistance components are usually referred to as loads. Loads use their resistance to convert current into work (light, heat, motion). This conversion causes voltage drop (ΔV) as the electrical pressure is used up. Typical loads include lamps, motors, relay coils and most sensors. Voltage drop (ΔV) is always proportional to resistance. The higher the resistance, the higher the ΔV.

In any electrical circuit, all the voltage will always be used up. Adding up all the voltage drops in a circuit will always equal source voltage.

Current Flow

Current is the term used to describe the **flow of electrons** through the circuit. It is this flow of electrons that does the “work” in the circuit. The unit for measuring the amount of current flow is the Ampere or Amp (A). One Amp equals 628 billion billion electrons per second flowing through a circuit.

Current will only flow if there is a complete circuit between a source of higher voltage (power) and a lower voltage (ground). Voltage is the pressure that pushes the electrons through the circuit and Amperes is a measure of the number of electrons flowing.

The combination of amperage with voltage determines the amount of **power** that is being used at the load in the circuit. Power is measured in Watts (W). The amount of power that is being used by a load can be determined by multiplying the amperage through the load by the voltage drop across the load.

Current Flow

Measured in Amps (A) or milliamps (mA), current flow is caused when a voltage or pressure differential exists at both ends of a conductor.

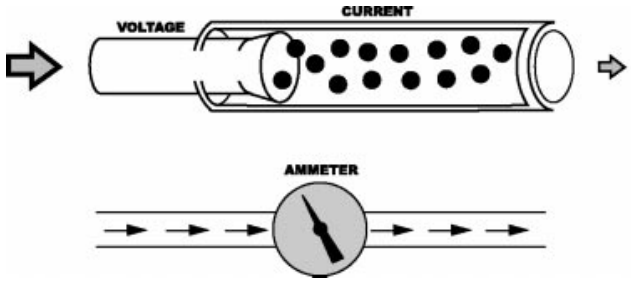

Fig. 1-5
L652f105

Measuring Amperage

Note that the ammeter is connected in series. The circuit must be "broken" so that the meter could be placed "in-line" with the circuit. The wattage of the light bulb can be determined by multiplying the amperage and the voltage drop.

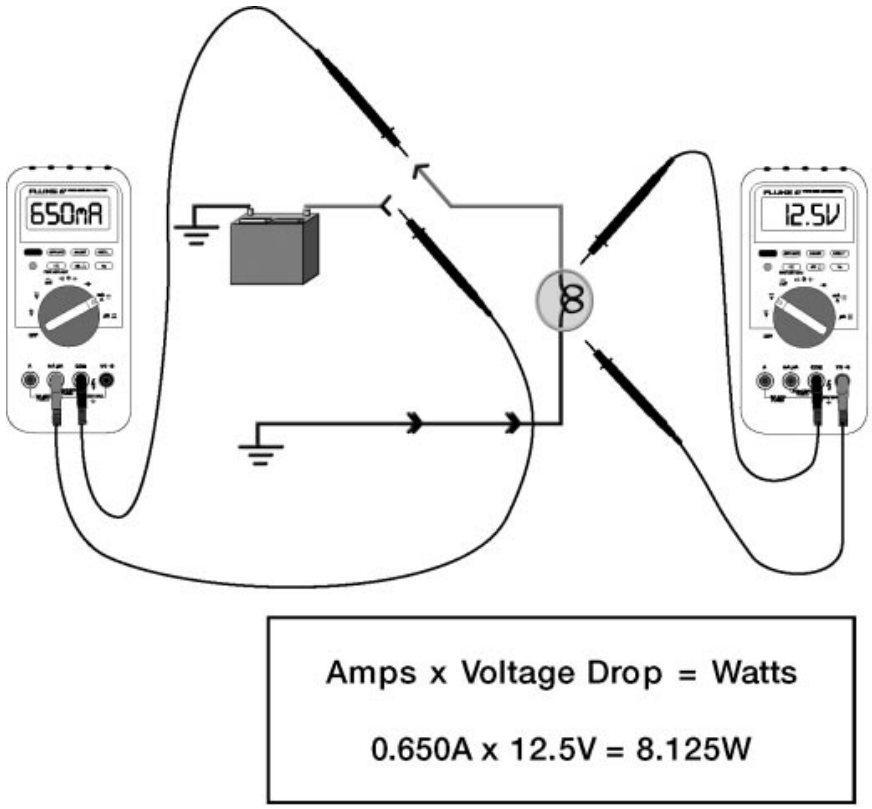

Fig. 1-6
L652f106

Resistance

Electrical resistance describes how much something opposes current flow. This opposition to current is measured in Ohms (Ω) or in thousands of Ohms (kΩ). In every circuit, resistance **regulates** current.

In a "perfect" circuit, the only resistance would be the load you are operating with the circuit. But even the best of conductors (materials which allow the flow of electrons) have a certain amount of electrical resistance. Materials which have an extremely high resistance are called *insulators*.

Resistance

Resistance is the opposition to current flow. Resistance determines the amount of current flow as long as the voltage stays constant. In theory, the load should be the only resistance in the circuit.

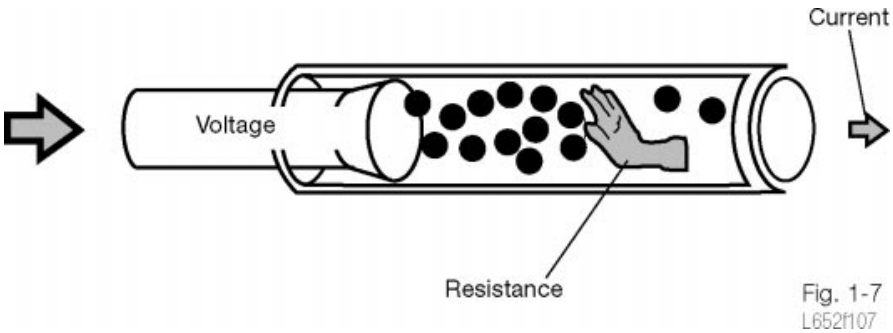

Fig. 1-7
L652f107

Using an Ohmmeter

When using an ohmmeter, disconnect the component from the circuit to isolate the measurement from other current flow paths or voltage sources. In this case, the ohmmeter does not measure the open circuit at the burned out light bulb.

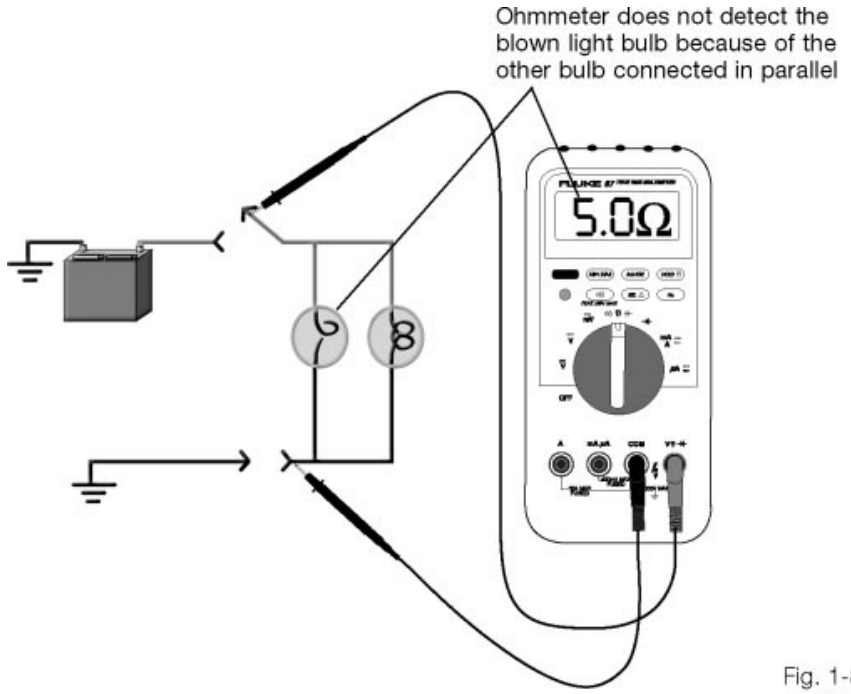

Fig. 1-8
L652f108

Ohm's Law

In short, Ohm's law states that "current in a circuit will always be proportional to the voltage and resistance present." Voltage, amperage, and resistance in a circuit work in *proportion to each other*. Mathematically, we can always *predict* what electricity is going to do in a circuit, as long as we know what any two of the three values are.

So, for example, if you knew what the voltage and resistance were in a circuit, you could easily determine exactly how much current there would be in the circuit.

Ohm's Law Equation

The important fact about Ohm's law is that electrical systems and electrical problems are predictable. There is no magic to how electricity works!

Voltage = Amperage x Resistance

$$\text{Amperage} = \frac{\text{Voltage}}{\text{Resisitance}}$$

$$\text{Resistance} = \frac{\text{Voltage}}{\text{Amperage}}$$

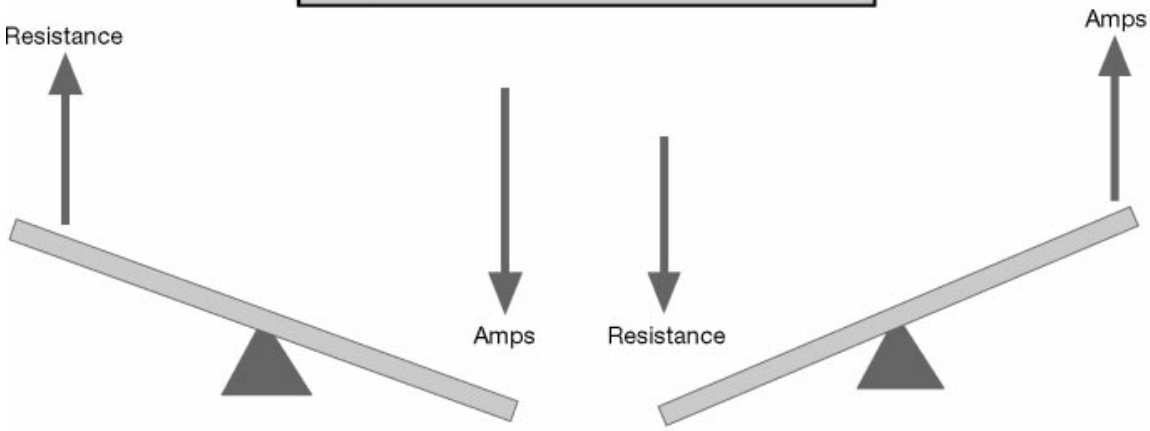

When Resistance goes up, Current Flow goes down.
When Resistance goes down, Current Flow goes up.

Fig. 1-9
L652f109

Basic Principles of Series/Parallel Circuits

Ohm's Law Formula

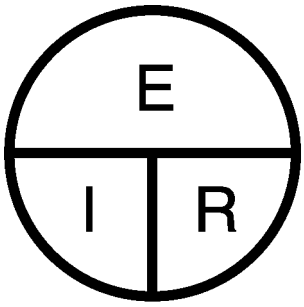

Fig. 1-10
L652f110

Series Resistance

One of the more difficult concepts concerning Ohm's Law has to do with calculating resistance in a circuit. Series circuit resistance is probably the easiest concept to understand because it is simply an adding up of all the resistances in a circuit in order to get the total resistance. Figure 1-11 illustrates the method.

Series Resistance

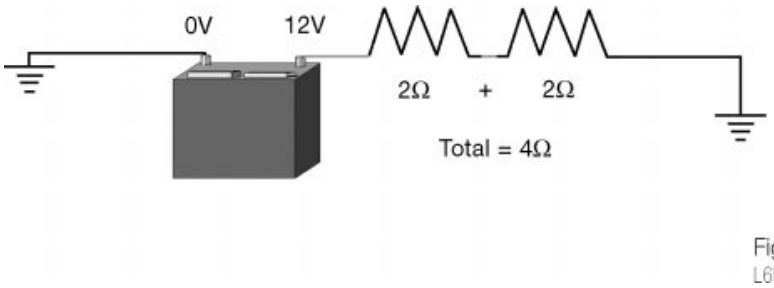

Fig. 1-11
L652f111

The total resistance is the sum of all resistances in the circuit. This resistance will affect the number of amps which can flow through the circuit. Ohm's Law says that amps can be found by dividing ohms into voltage. In this case: 12V divided by 4Ω equals 3A.

Parallel Resistance

In Figure 1-12, we have a parallel resistance rule at work. The total circuit resistance will always be less than the smallest resistance. To find total resistance you must treat each branch as an individual series circuit. 12V divided by 2Ω equals 6A current per branch. Adding the branch currents, 6A plus 6A equals 12A total current. Dividing 12V by 12A equals a total parallel circuit resistance of 1Ω Notice that this number is smaller than the smallest branch resistance.

Parallel Resistance

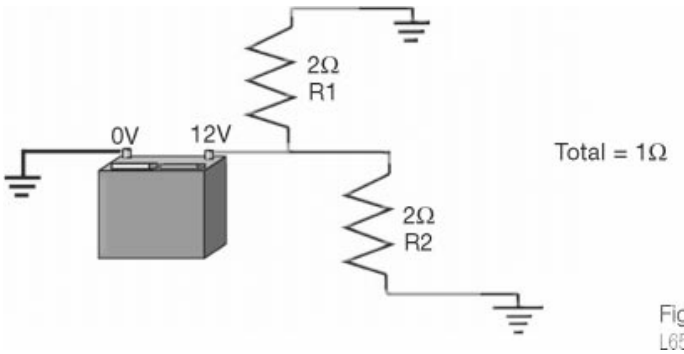

Fig. 1-12
L652f112

Series/Parallel Resistance

Series/parallel circuits are the most difficult calculation.

Series/Parallel Resistance

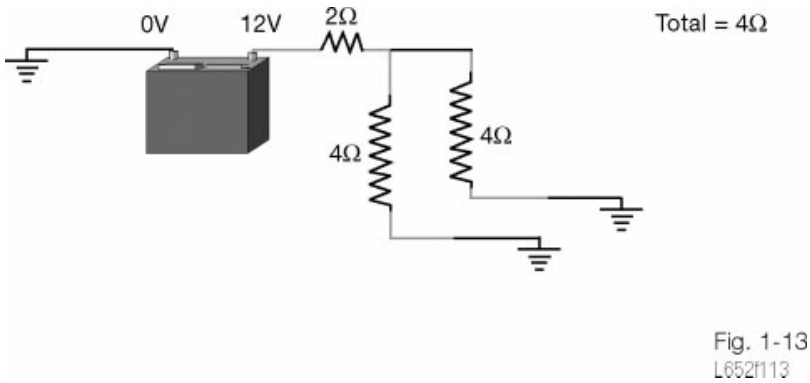

Fig. 1-13
L652f113

The first step is to calculate the total resistance of the parallel portion of the circuit. The formula is:

$$\frac{1}{\frac{1}{R1} + \frac{1}{R2}}$$

Using values from the example:

$$\frac{1}{\frac{1}{4} + \frac{1}{4}} = \frac{1}{0.25 + 0.25} = \frac{1}{0.5} = 2\Omega$$

Adding the total resistance of the parallel portion, 2Ω ohms, to the 2Ω from the series portion equals 4Ω total circuit resistance.

Why Does It Matter?

Knowing the formulas which arise out of Ohm's Law is not necessarily helpful for repairing automobiles. A person can know theory, but not know how to apply it in the real world. However, a knowledge of the relationships between these elements is essential to a Technician. You need to be able to predict what **should be** as opposed to **what is** in a problem vehicle. We are going to use the concept of voltage drop in this class to make this kind of diagnosis quicker and easier. Later, as you become more familiar with electrical theory and concepts, there may be an opportunity to do more advanced calculations like the ones we have discussed here.

On-Car Applications of Ohm's Law

The "math" side of Ohm's Law is important if we are designing a circuit. But because we are in the business of repairing electrical problems, what we need to know about Ohm's law can be summarized. Since most circuits (and basically all body electrical circuits) work on what is called 12V power (which is actually more like 12.6 - 13.6V) we will look at Ohm's law with the voltage held constant. Assuming this fixed voltage, we can summarize Ohm's law as: **"When resistance goes up, current goes down. When resistance goes down, current goes up."** This is the heart of Ohm's law when it comes to servicing a vehicle.

Knowing the principle of Ohm's law plays an important role when diagnosing an electrical problem. However, a Technician will rarely use a calculator to fix an electrical problem. The importance of Ohm's law is that it provides the foundation for being able to **understand and predict** how an electrical circuit will respond.

- If a circuit is **inoperative**, and there is no current in the circuit, it means that there is an infinite amount of resistance or an **open** somewhere in the circuit.
- If the circuit is **partially working** (such as when a bulb is dim), and the load is not receiving full battery voltage, it is probable that there is **excessive resistance** in the circuit. The excessive resistance can be located either in the circuit itself or in series somewhere in the circuit. Or, the battery may not be delivering 12V.

HINT

If the battery voltage is low, more than one circuit will be affected.

- If a 20A **fuse is blown**, we know that a lot of current must have been flowing in the circuit. In order to get a 20A fuse to blow at 12V, there must be very little resistance (0.6Ω) in the circuit. This condition is caused by too many loads connected to the fuse, aftermarket accessories or a possible **short-to-ground**. Shorts-to-ground provide a no or very low resistance to path to ground **before the load**, allowing current to flow unregulated. In this case, the resistance of the load has been removed.

Because of Ohm's law the actual circuit does not need to operate in order for us to know how much current (if any) there will be or where it is going to flow. Ohm's law makes current predictable. So instead of checking *every component, connector or wire* on the vehicle, a Technician can use the *System Circuit Diagram* to determine where current flow should be, and which specific area could be causing the problem. This type of diagnosis eliminates unnecessary checks during the repair process. **It saves the Technician time**.

General Electrical Rules

- Current can only flow when there is a complete path between power and ground (or between a higher voltage and a lower voltage). No complete path = “open” circuit = 0 current.
- The resistance of the load limits current in the circuit and converts current into work. In a perfect circuit the only resistance would be the load.
- Whenever current flows in a circuit voltage drops (ΔV) will happen. Voltage drops happens anywhere there is resistance. The larger the resistance the larger the voltage drop.
- Every circuit will use up all the source voltage (total ΔV will always equal source voltage).

Series Circuit Principles

In a **series circuit**, regardless of the number of loads in the circuit, there is only one path for current. There are not many circuits on the vehicle that precisely fit this description. The Lexus radiator fan circuit, shown in fig. 1-14, is a good example of a “true” series circuit. In general, the term “series” is used to describe any **in-line connection** between electrical components. Control components in the circuit, such as a resistor or a switch, as well as *circuit problems* are always in series. The term “series” is also used when describing the connection of test equipment, such as an **ammeter**.

An Application of Series Circuit Principles

On a typical Lexus Electric Radiator Fan Circuit, the fan motors are connected in series to get a low speed. Note all of the connections, switches and relay contacts that are connected in series with each other. Reference the “Radiator Fan and Condenser Fan” circuit in the EWD, System Outline, “Low Speed Operation” for a complete description.

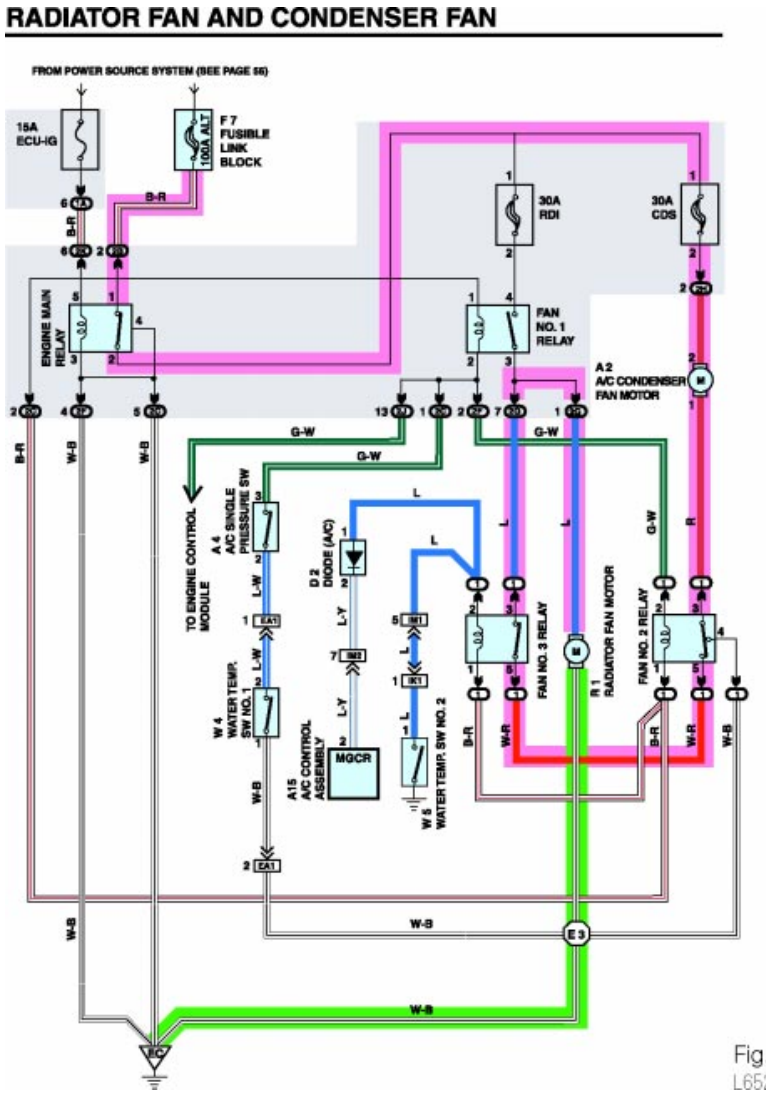

Fig. 1-14
L652f114

Voltage

The voltage provided by the battery or power source will divide proportionally between all of the resistances in the circuit. The resistor with the largest value, relative to the other resistance in the circuit, will have the largest voltage drop. If we measure all of the voltage drops in the circuit and add them together, we will always find that the sum of all drops will equal source voltage.

Resistance and Current

The resistance in a series circuit **add up** to the total circuit resistance. Assuming a fixed 12V power supply, the current in the circuit is determined by **total circuit resistance**. Since there is only one path, current will be the same at every point in the circuit. The placement of excessive resistance in the circuit, either before or after the load, does not change its affect on current. The resistance can be on either the “power” or “ground” side of the load and still cause the same reduction in current that leads to circuit problems.

Resistance In Series Decreases Current Flow Everywhere in the Circuit

The use of resistors in series decreases the amperage in the circuit. With the combination of the 3 resistors and a unique switch design, a one speed blower motor can have 7 different operating speeds.

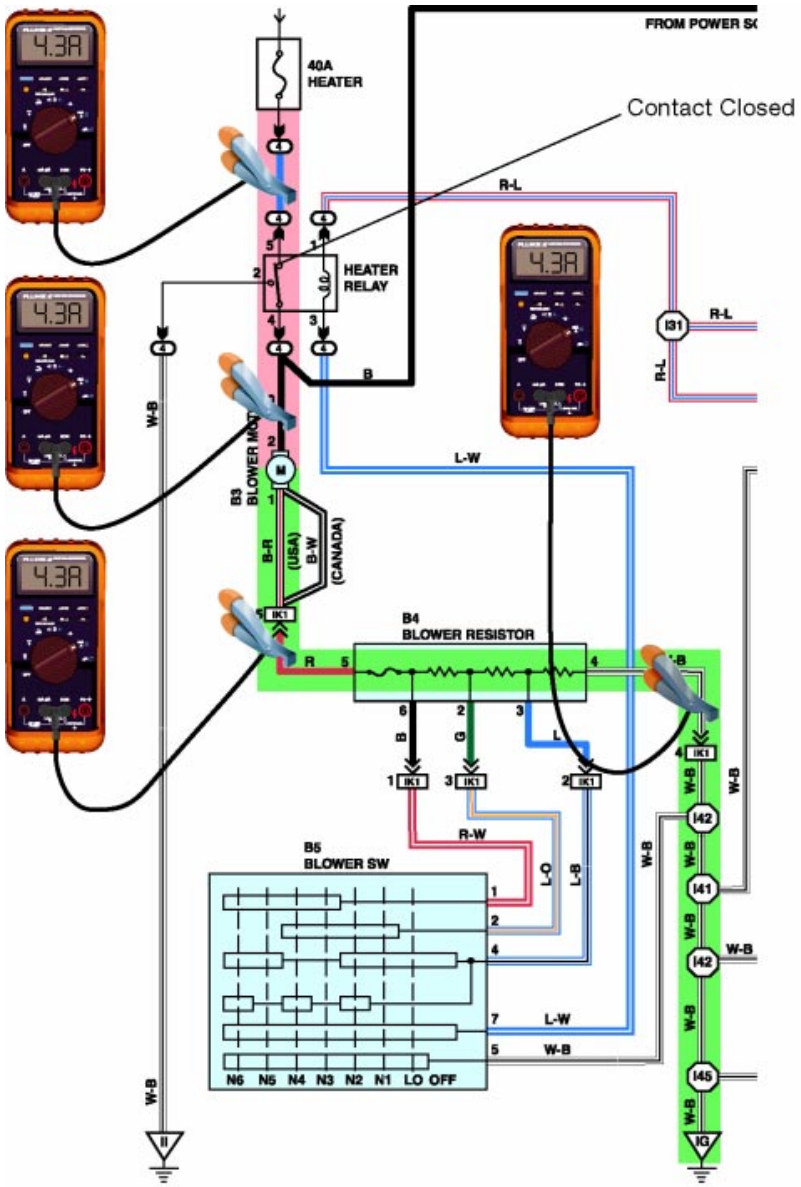

Fig. 1-15
L652f101

Series Circuit General Rules

- A true series circuit has only one current path regardless of the number of loads in the circuit.
- If there is only one load in the circuit, all the voltage drop will be in that load.
- If there are two, or more, loads in a circuit voltage drops will be divided accordingly to the resistance of the loads.
- The loads with the highest resistance will have the highest voltage drop. The load with the least resistance will have the least voltage drop.
- Current is the same everywhere in the circuit. An ammeter can be connected anywhere in the circuit in order to measure current.

On-Car Application of Series Circuit Principles

1. In a “perfect” automotive circuit, the **voltage drop at the load** would be exactly **the same as battery/source voltage**. Because of series resistance in the circuit from connections, control devices and conductors, the voltage drop at the load will **always be less than source voltage**, but not much.
2. If there is a **high resistance problem** in the circuit, it will **decrease the voltage drop at the load**. Because we know that the voltage drop in the circuit must add up to source voltage, we can use a voltmeter to track down and isolate the problem, by measuring voltage or voltage drops at various points in the circuit.
3. A **circuit problem anyplace in the circuit** (even if it is after the load) will reduce current in the entire circuit. Poor connections, nicked wires, or a loose ground point will affect the entire circuit.

Using Voltage Drops To Troubleshoot High Resistance Problems

By connecting the voltmeter in parallel, you can determine the location of any high resistance problem in a circuit.

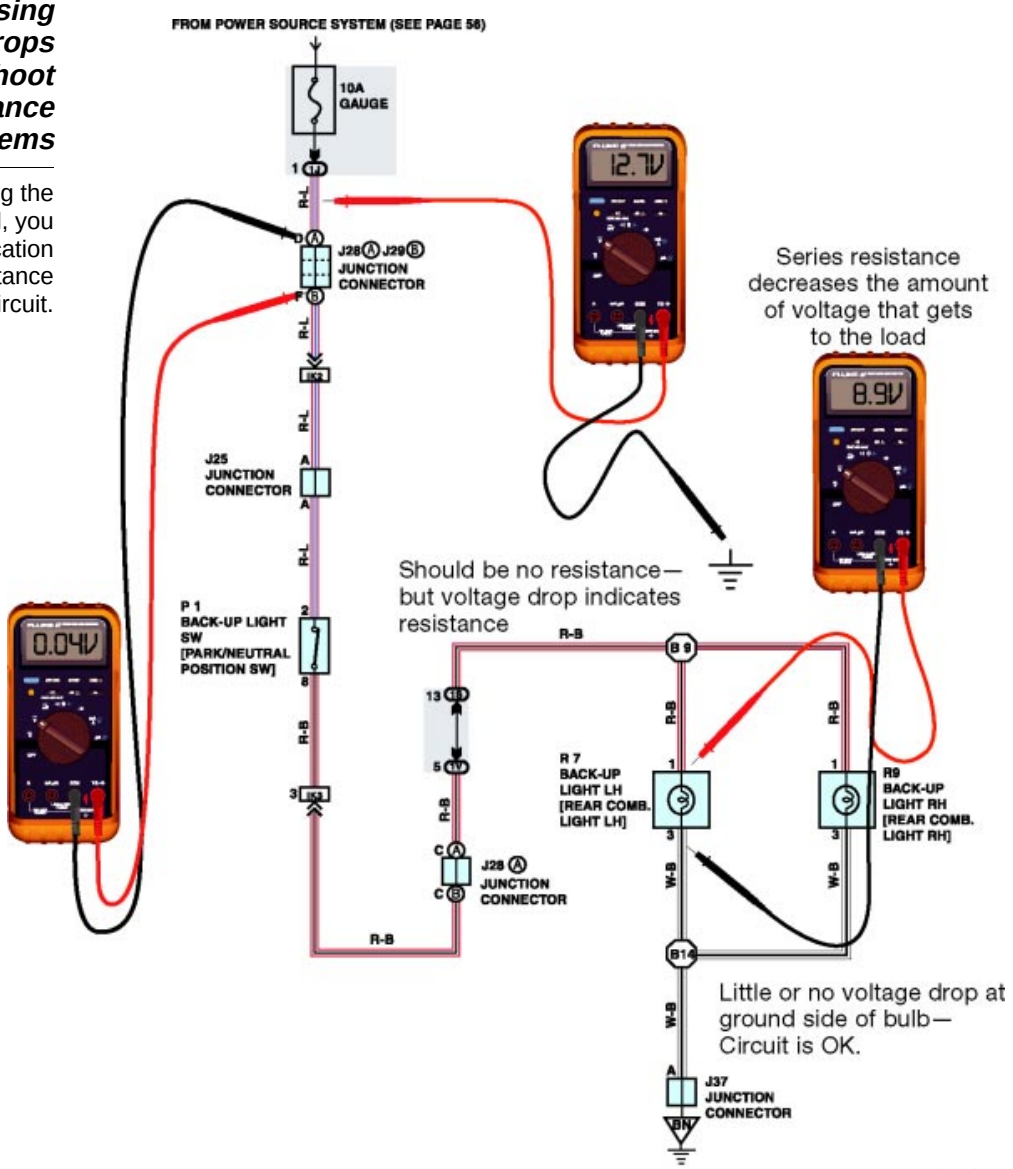

Fig. 1-16
L652f116

Parallel Circuit Principles

A parallel circuit has multiple loads that are connected to both the power source and ground in individual branches. Each branch provides its load with power and ground paths that are independent of other loads. There are very few “true” parallel circuits in automobile electrical systems. However, since automotive circuits are a combination of series and parallel circuits, understanding both series and parallel circuit principles is crucial to understanding automotive electrical systems.

Voltage

Source voltage is applied to every branch of a parallel circuit. The number of branches in a parallel circuit will have no effect on the voltage applied.

The term **parallel** is also used to describe how to connect a voltmeter into a circuit to make a **voltage drop test**. Backprobing the connector in parallel doesn't break into the operating circuit, it simply allows a path for additional current in the circuit. This small amount of current (due to high meter impedance) is used by the voltmeter to determine voltage drop between the two test leads.

Application of Parallel Circuit Principles

The branches of a parallel circuit operate independently of each other. A parallel connection to the battery/charging system delivers "12V" to all the electrical components on the car.

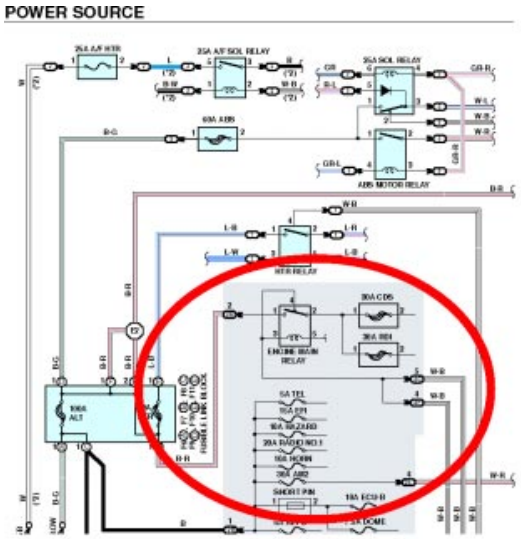

Fig. 1-17
L652f117

Backprobing a Connector

Here is an example of the parallel connection of a meter. This set up can measure voltage drop or show available voltage. Probing from the front of the connector can do a lot of damage if not done VERY CAREFULLY!

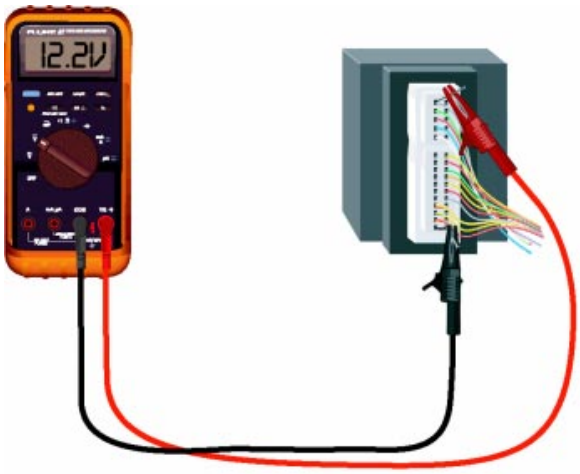

Fig. 1-18
L652f118

Voltage in a Parallel Circuit

The voltage in each branch is the same as the source voltage. (There is an inconsequential drop at the load.)

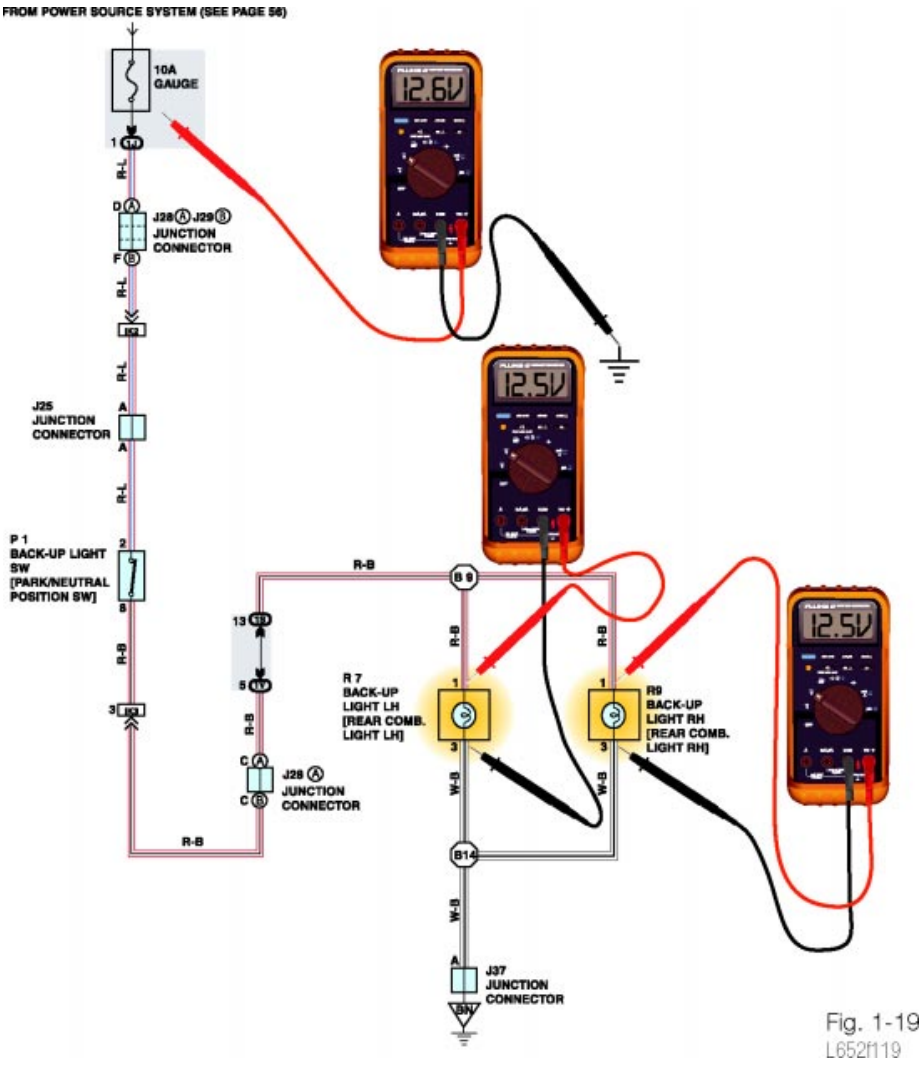

Fig. 1-19
L652f119

Resistance and Current

The resistance rule for parallel circuit is one of the most difficult concepts in every basic electrical course. In parallel circuits, total circuit resistance is always less than the smallest individual resistor. To help understand this principle, keep the relationship between resistance and current in mind.

- As demonstrated by Ohm's Law, when voltage is held constant, resistance and current are inversely proportional. If resistance goes up then current will go down and if resistance goes down, current goes up.
- Total parallel circuit current is the sum of all the branch currents. Adding a branch to a parallel circuit increases total current. The only way for total circuit current to increase is for total circuit resistance to decrease.

Determining Resistance in a Parallel Circuit

There are formulas to determine this resistance. On cars, we tend to look at parallel circuits in terms of the amount of AMPERAGE used, and not in terms of the total circuit resistance.

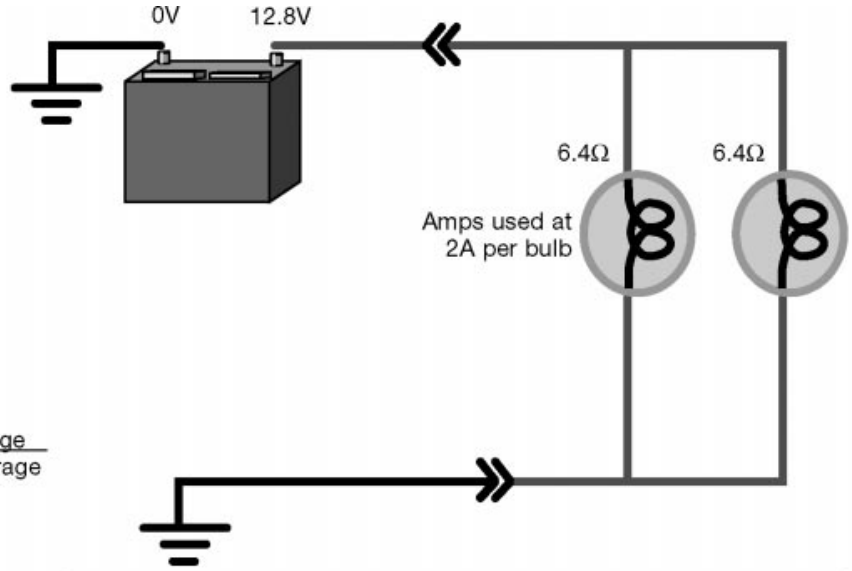

$$\text{Resistance} = \frac{\text{Voltage}}{\text{Amperage}}$$

$$\frac{12.8\text{V}}{4\text{A}} = 3.2\Omega$$

12V
At a fixed source voltage:
If there is MORE current flow,
It must be caused by LESS resistance.

Fig. 1-20
L652f120

NOTE

As long as you understand how voltage and amperage "work" in a parallel circuit, understanding the resistance concept may fall into the category of "nice to know" but not critical when it comes to on-car diagnosis.

Parallel Circuit General Rules

- Parallel circuits have more than one path for current.
- Source voltage is applied to all branches.
- Current in each branch is determined by that branch's resistance.
- Total current is the sum of all the branch currents.
- Total circuit resistance decreases as branches are added. Adding a branch increases total circuit current and if current goes up it must be because resistance went down.
- Total circuit resistance will always be less than the lowest branch resistance.

Applying the Parallel Circuit Current Flow Principles

By figuring how much amperage increased when an accessory is turned on, will tell you how many amps the one component is using, even if there are other accessories in operation.

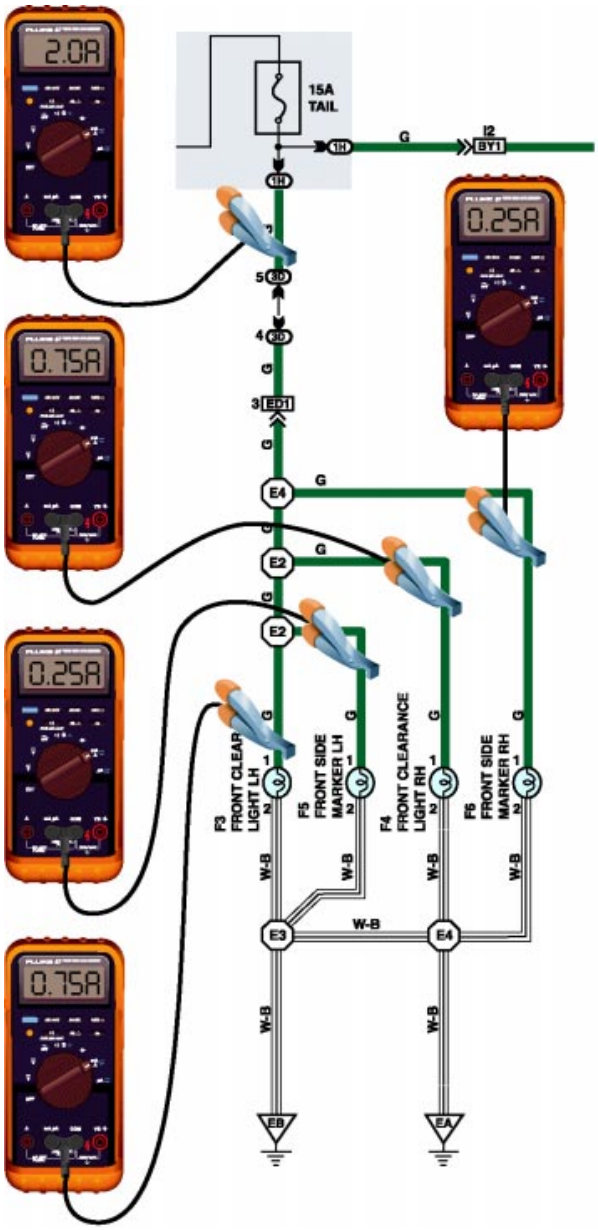

Fig. 1-21
L652f121

Series-Parallel Circuits

Series-parallel circuits are combinations of series circuit elements and parallel circuit elements. Most Lexus electrical circuits are a variation of the classic series parallel circuit. A typical Lexus automotive circuit will have the power supply and sometimes a control device in series with parallel connections to multiple loads. Series connection for power and control allows designers to simplify and lighten the electrical system. Parallel connections to multiple loads allow components to receive full source voltage for maximum efficiency. A classic series-parallel circuit has a load in series connected to multiple loads in parallel. In this type of circuit, the load in series causes a voltage drop so the parallel loads receive less than full source voltage.

When analyzing series-parallel circuits remember that the series portions of the circuit will follow series circuit rules. The parallel portions of the circuit will follow parallel circuit rules.

Junction blocks, junction connectors and splices are used to create the transition between the series and the parallel portions of series-parallel circuits.

Junction Connectors

Junction Connectors have built-in shorting pins to make the parallel connection between the +B and the other circuits. This connection allows the manufacturer to use less wire and therefore saves money. Ground connections are also made at these connectors. Do not remove the shorting pins when making a voltage inspection.

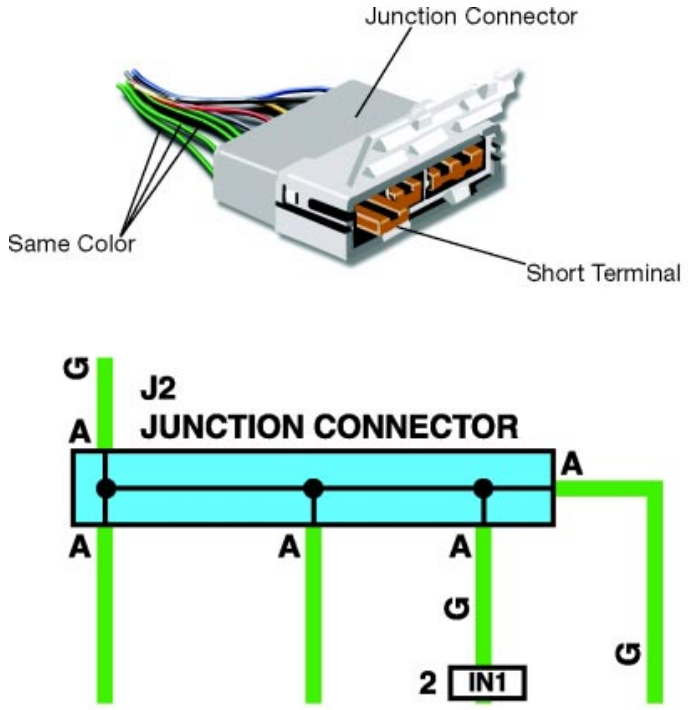

Fig. 1-22
L652f122

Series-Parallel General Rules

- Problems in the series portion of a series-parallel circuit will affect the entire circuit. If every load in a series parallel circuit is inoperative, the problem is most probably in the series parts of the circuit.
- Problems in a parallel branch of a series parallel circuit will affect only that branch. If only one tail lamp is inoperative, the fuse and switch in the series part of the circuit are not the problem.

Application of Series-Parallel Principles

Virtually every circuit on the vehicle has a series element (a switch) and a parallel element (multiple loads in a circuit). The rheostat in this circuit is in series with the bulbs, controlling the bulbs' intensity by limiting the current flow in the circuit.

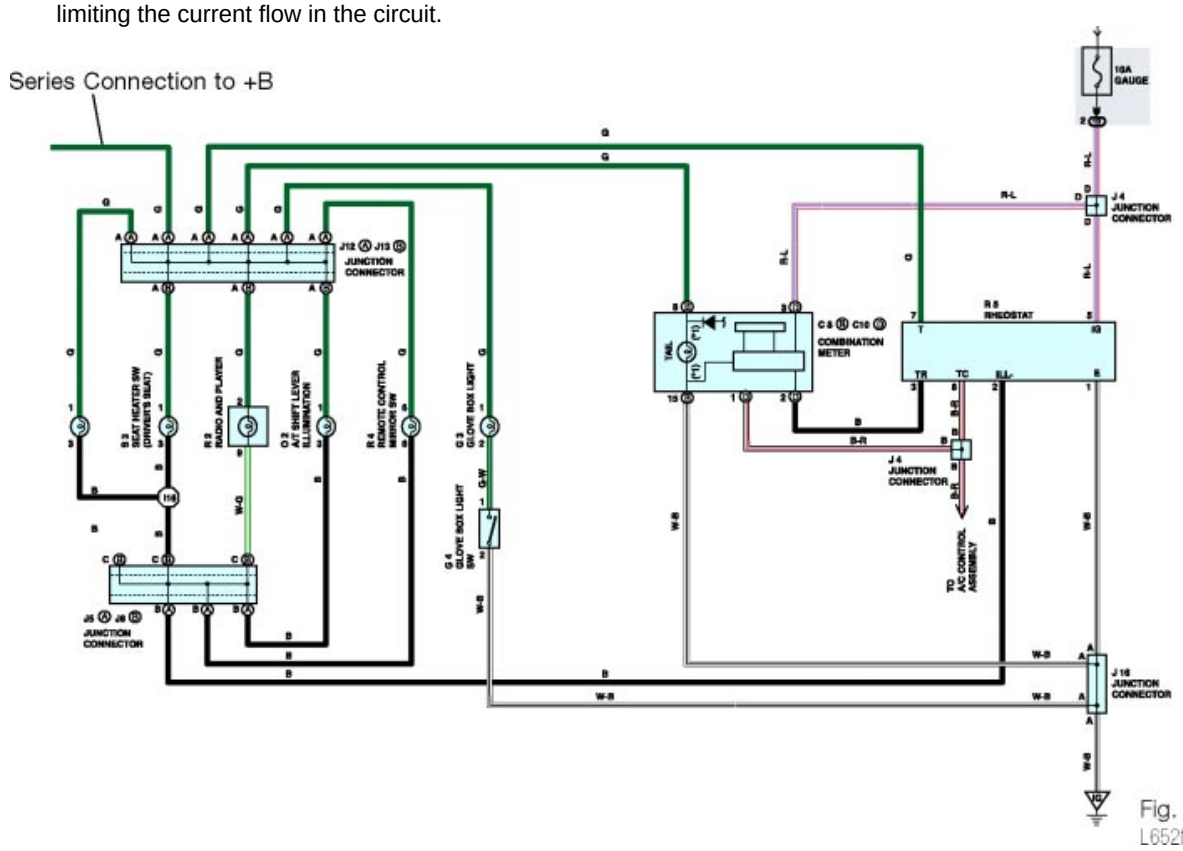

Fig. 1-23
L652f123

On-Car Electrical Circuits

Every electrical circuit on the vehicle contains the following:

- Load
- Voltage source and ground
- Over-current protection
- Control device
- Conductors
- Connectors

A Basic Automotive Electrical Circuit

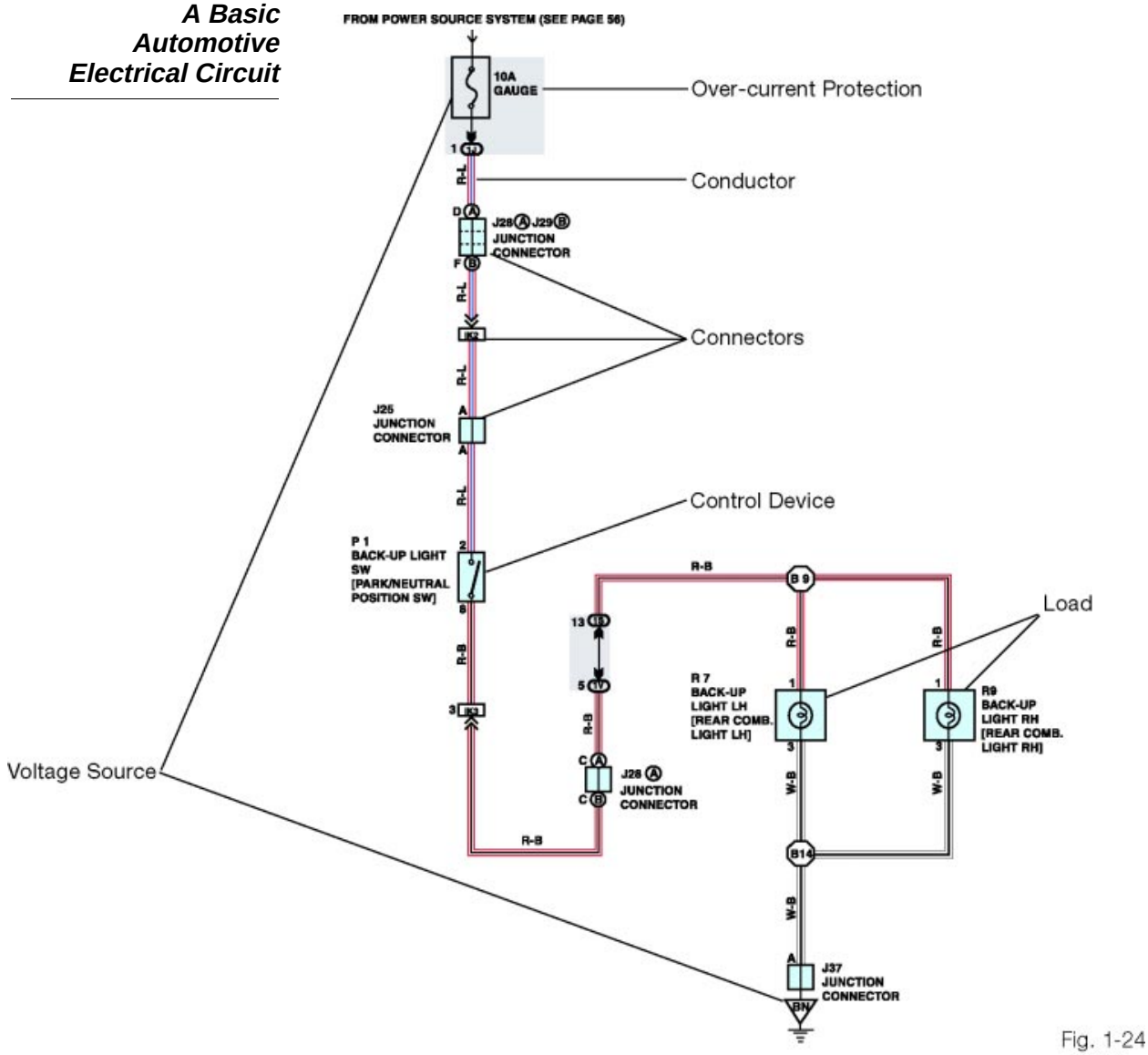

Fig. 1-24
L652f124

Load Every circuit is built around the load. The load in a circuit does the actual work: a light bulb, a motor, a solenoid, a computer or a heating resistor.

Typical Loads

A load can be as simple as a light or motor, or a more complicated ECU.

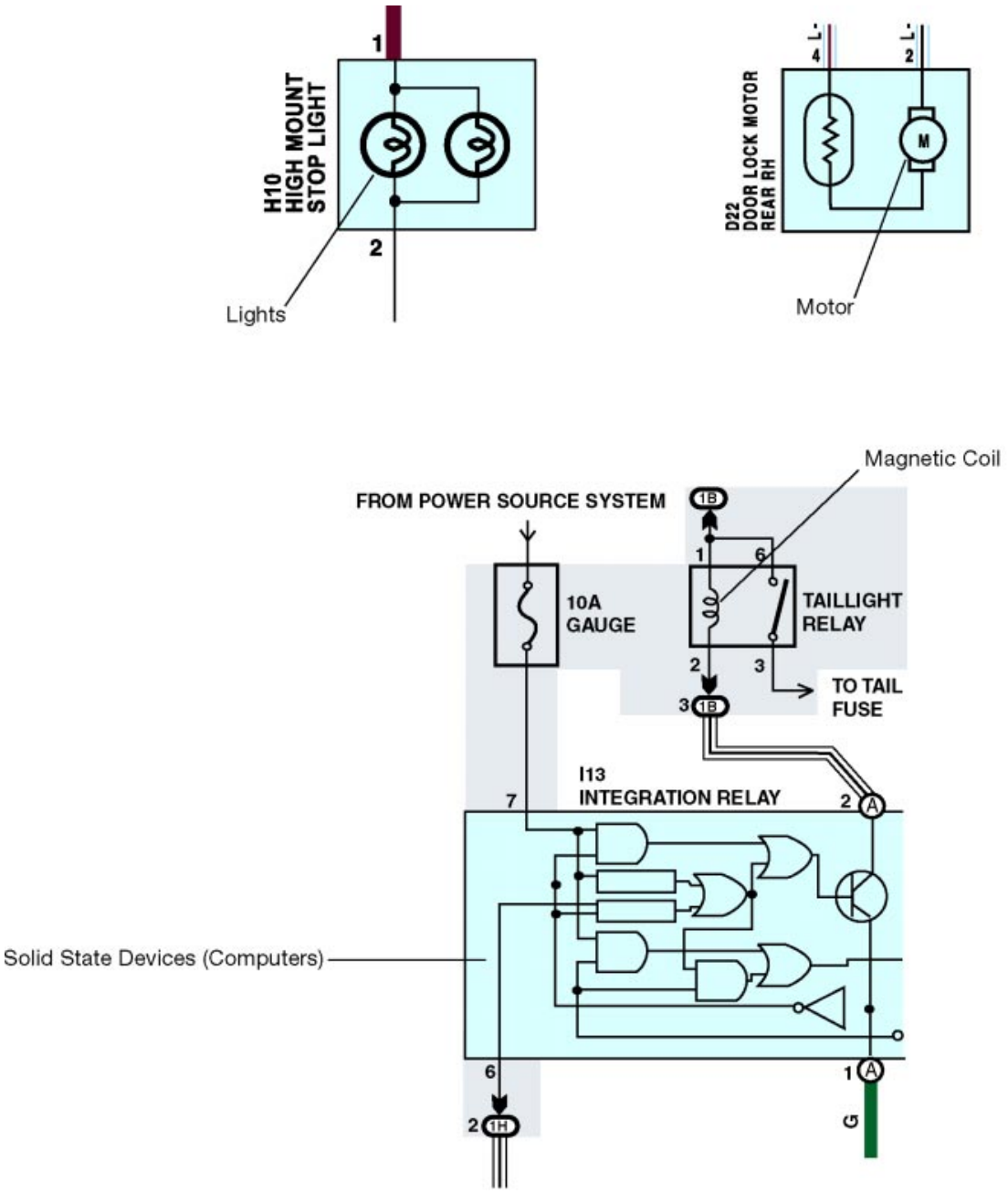

Fig. 1-25
L652f125

Voltage Source

The voltage source is the “electron pump” that provides the pressure differential in the circuit. This pressure differential gets the electrons moving within the conductors. On the vehicle, voltage is provided by the battery and the alternator. In many cases, the voltage inside the component (such as an ECU or ECM) is maintained temporarily after the key is turned off or power removed through the use of a capacitor.

Voltage Sources

The battery and the alternator provide voltage to the electrical system. A capacitor acts as a voltage “accumulator”. The symbol for each of these is also shown.

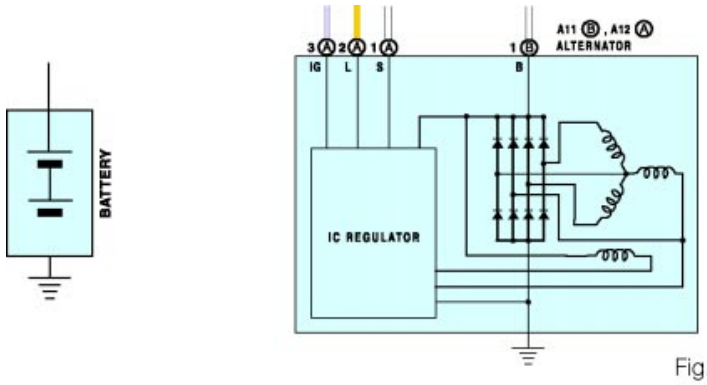

Fig. 1-26
L652f126

Other Voltage Sources

Sensors used in ECU controlled systems such as TCCS and ABS produce an AC voltage that the ECU uses to determine RPM, or other operating conditions. Noise filters are capacitors which act as voltage “accumulators ” to dampen sudden voltage changes. The ignition coil uses magnetic induction to step up the 12V battery voltage into the KV necessary to fire the spark plug.

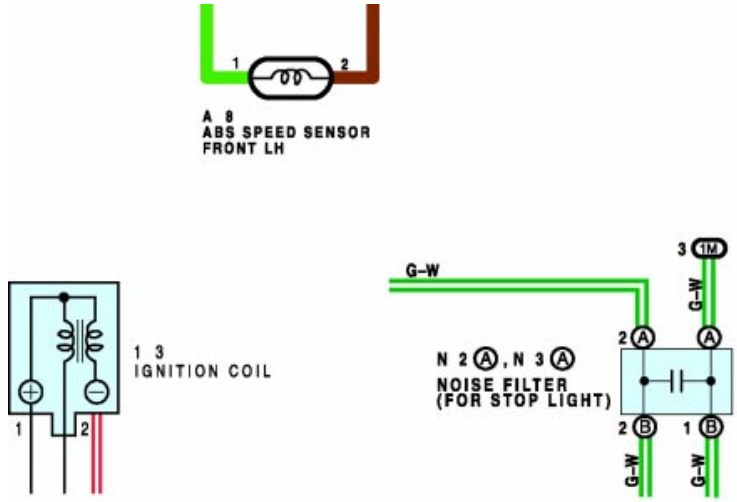

Fig. 1-27
L652f127

Over-Current Protection

Fuses , circuit breakers, and fusible links are built into every automotive circuit to prevent damage from excessive current. An over-current condition can be caused by a lack of aftermarket accessories. A short to ground condition allows current to flow to ground before it reaches the load. Since the load is bypassed there is nothing to limit current in the circuit. Without a fuse in the circuit, wires and connectors would be damaged by excessive current. The maximum load to a single fuse is designed to never exceed seventy percent of the fuse's rating.

Over-Current Protection Devices

Fuses, circuit breakers, and fusible links quickly open the circuit when too much current flow occurs.

Illustration	Symbol	Part Name	Abbreviation
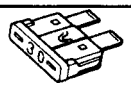		Fuse	Fuse
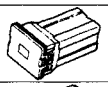		Medium Current Fuse	M-Fuse
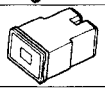		High Current Fuse	H-Fuse
		Fusible Link	FL
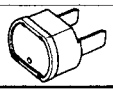		Circuit Breaker	CB

Fig. 1-28
L652f128

Control Devices

Most circuits on the vehicle are **switched** off and on to control when they operate. This switching is done through the use of relay contacts, transistors, and of course, mechanical switches.

To limit or control the amount of current in a circuit a **series resistor** can be used. Examples of this are found in some A/C blower motor circuits and in fuel injector circuits on cars equipped with low resistance injectors.

There are several circuits on the vehicle that are designed to be "ON" at all times. These include Theft Deterrent Systems, and components that have an electronic memory such as radios, clocks and ECMs (Engine Control Modules). Circuits which are "ON" all the time create parasitic loads which draw current from the battery even when the engine is off and the vehicle is parked.

Control Devices

Circuit control is done using switches, resistors, relays, and transistors.

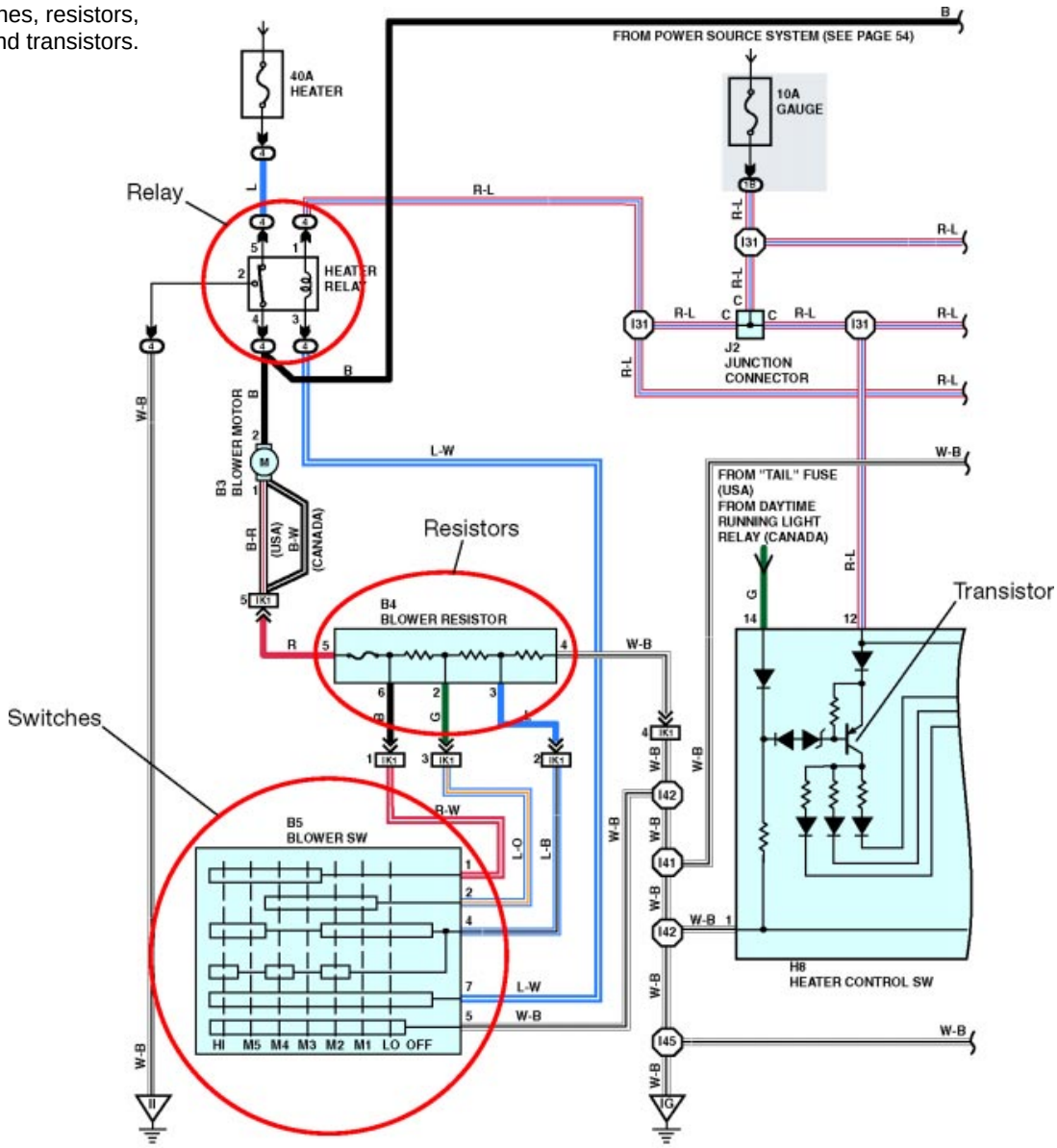

Fig. 1-29
L652f129

Conductors

A **conductor** provides a low resistance pathway for current. All conductors have a certain amount of resistance. The resistance is determined by the conductor's:

- **Diameter** - Larger area has less resistance.
- **Length** - Shorter wire has less resistance.
- **Material** - Some materials conduct better than others.
- **Temperature** - Heat increases the resistance in the conductor.
- **Physical Condition** - Corrosion or nicks in the wire increase resistance.

Current flow will occur through the conductor any time there is a connection between the positive and negative terminals of the voltage source.

Conductors

All conductors have at least a very small amount of resistance. The conditions of resistance are listed.

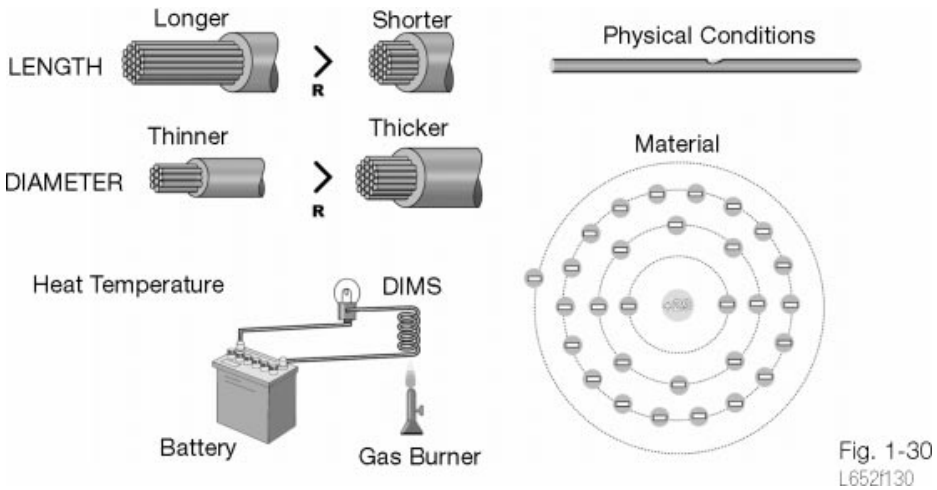

Fig. 1-30
L652f130

Connectors

Given a relatively fixed voltage in an automotive electrical system (12 volts) the current in the circuit is determined by the amount of resistance in the load and in the conductors and connections in the circuit.

Terminals, connectors and splices are used throughout the electrical wiring harness to aid in the assembly and service of the vehicle, any connection in a circuit provides an area where problems could occur. Typical connector problems include:

- Disconnected connector
- Terminal backed out
- Terminal corrosion
- Terminal spread too wide
- Improperly made splice

The Lexus Wire Harness Repair Kit SST contains a selection of terminals that bare used in the wiring harness. Additional terminals and connectors are also available through the parts system.

Lexus Wire Repair Kit

Contains frequently used terminals and wire repair tools. The manual supplied with the kit provides the part number for a large number of terminals and connectors.

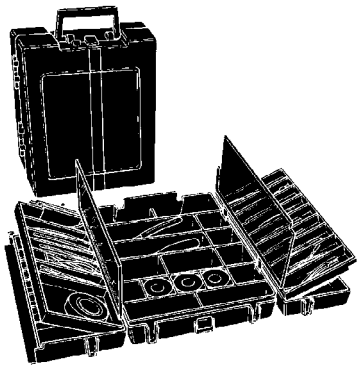

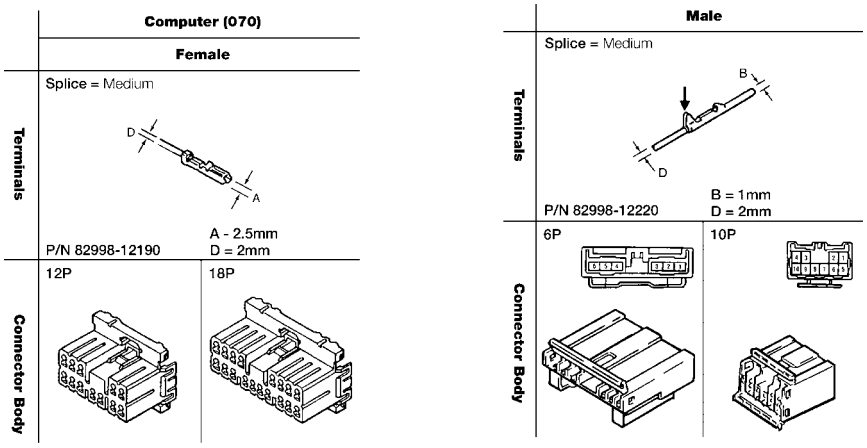

Fig. 1-31
L652f131

Basic Diagnostic Tools

When diagnosing an electrical problem there are a number of "tools" available to help find and repair the problem. While using these tools can help in locating electrical problems, *mastering their use* is the key to being able to perform the job in the shortest amount of time.

Electrical Wiring Diagram

The **Electrical Wiring Diagram (EWD)** is your #1 source for Lexus electrical system information. This manual contains detailed information about the entire electrical system, both body and engine control. There are two keys to being able to use the EWD effectively:

1. **Knowing where to find the information you want.** There is a lot of information packed into this manual. The ability to locate everything is very important.
2. **Understanding basic circuit theory.** The EWD does not "talk" a technician through the diagnostic process. We must take the problem symptoms, apply them to the System Circuit Diagram, trace the paths of current flow, and create a diagnostic plan **on our own, without prompting from the manual**.

NOTE Be aware that there may be specifications from other countries in certain EWDs.

Electrical Wiring Diagram

Make certain that you correctly identify the appropriate wiring diagram. Some diagrams which are listed are written for cars sold in other countries. (Canada or Brazil)

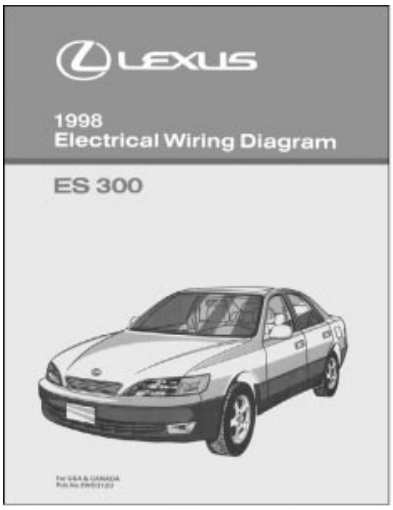

Fig. 1-32
L652f132

Repair Manual

The **Repair Manual (RM)** contains body electrical information that is formatted differently from the EWD. Its key advantages are:

- **Troubleshooting charts will guide you through specific inspections step-by-step.**
- **Contains Diagnostic Trouble Codes** for every system with self-diagnostics. This makes it the first place to look whenever you are working with systems such as the Supplemental Restraint.

Toyota Repair Manual

The BE and DI sections in the Repair Manual are the best resources to use when diagnosing a system that has self-diagnostics. The Repair Manual explains how to test values or connectors. The "Theory of Operation" is also covered in the manual. Use these sections in conjunction with the EWD.

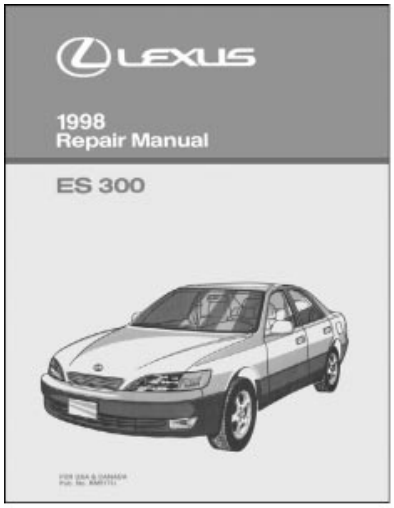

Fig. 1-33
L652f133

Digital Multimeters

In L623, we learned how to use both *analog* and *digital* multimeters. In this course, we will concentrate on using the digital multimeter (DVOM). While analog meters have their uses, the DVOM provides many advantages:

- **Highly accurate** even on low-current solid state circuits.
- **Additional features** such as "min-max," peak hold.
- Some models **can read rapidly changing voltages**. This can help when looking for intermittent problems.

Digital/Analog Multimeters

The best measurement tool for body electrical. In recent years, DVOM prices have fallen, and new, useful features have been added. The analog meter is less expensive but more difficult to work with in automotive applications.

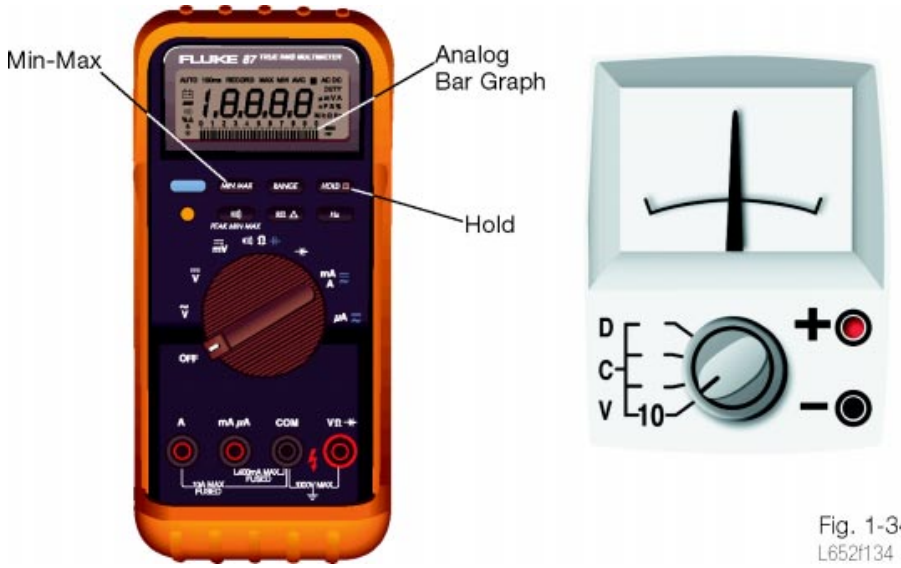

Fig. 1-34
L652f134

Test Lights

The **test light** is one of the oldest electrical tools we have, and it can be useful, but only in limited ways.

- It can tell you if a wire is "hot," but like an open circuit voltage inspection, it cannot tell you how much voltage is actually present.
- Bulb intensity varies from test light to test light.
- Can be used as a load in place of the fuse when diagnosing a short-to-ground problem, but has severe limitations. (These will be covered in Section 5 of this handbook).

Because of the complexity of body electrical circuits now, and the future complexity we expect to see, the test light is nearing the end of its usefulness. So in this course, we will be working exclusively with DVOMs. There will be a lot of hands-on worksheets later in this course to help you to master it's use.

Test Lights/Jumpers

A test light is useful in limited ways, but inconsistent. Cannot accurately test for voltage drop. Will indicate only presence of voltage. Jumpers can allow us to take current flow across suspect areas (control devices, grounds)

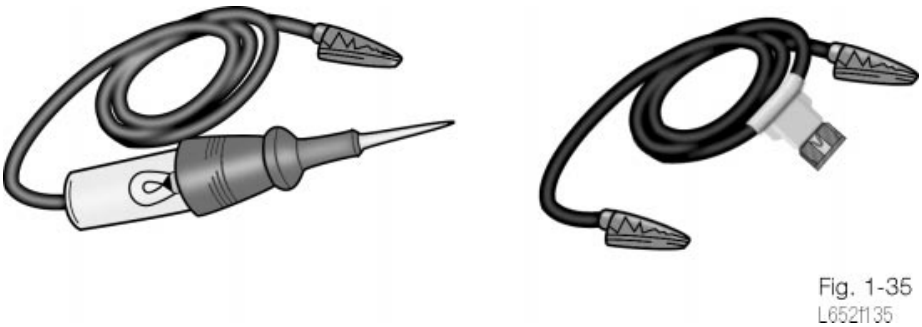

Fig. 1-35
L652f135

WORKSHEET 1-1
Electrical Basics

Vehicle	Year/Prod. Date	Engine	Transmission

Worksheet Objectives

At the conclusion of this worksheet, you will be able to demonstrate your expertise to:

- Identify electrical symbols used in the EWD
- Apply the 6-Step Troubleshooting Process to affect a repair
- Define Voltage, Amperage, and Resistance
- Apply Ohm's Law to identify Open, Short, or High Resistance conditions in a circuit
- Provide a trace of the Current Flow through a circuit
- Demonstrate the correct procedures for measuring Voltage, Amperage, Resistance, and Voltage Drop in a circuit
- Explain how Voltage, Amperage, and Resistance may be predicted to react in Series, Parallel, and Series-Parallel Circuits

Tools and Equipment

- L622 Kit (Suitcase Simulator)
- DVOM
- Green and Pink color highlighters
- L652 Technician Handbook
- 1998 ES 300 EWD and Repair Manual

Body Electrical Rules:

- Electricity is the flow of electrical charges through simple materials and devices.
- Automotive electrical systems use the flow of electrical charges to do work.
- The pressure that pushes the electrical charges is called voltage. The unit of measure for electrical pressure is Volts (V).
- The amount of electrical charges flowing is called current. The unit of measure for current is Amps (A). 1 Amp equals 6.28×10^{18} (6,280,000,000,000,000,000) electrons per second.
- Resistance opposes current, converts the flow of electrical charges into work and causes voltage to be used up. The unit of measure for resistance is Ohms (Ω).

Body Electrical Definitions:

1. Current (A) can only flow when there is a complete path (circuit) between power and ground (or between a higher voltage and a lower voltage). No complete path = an “open” circuit = 0 flow

2. The resistance of the load limits current in the circuit and converts current flow into work. In a perfect circuit the only resistance would be the load.

3. Whenever current flows in a circuit, voltage drops (ΔV - Δ is the Greek letter Delta, which means change in, so ΔV represents change in voltage or Voltage drop.) will happen. Voltage drops happens anywhere there is resistance. The larger the resistance the larger the voltage drop.

4. Every circuit will use up all the source voltage (total ΔV will equal source voltage).

Current Path Tracing:

Current tracing is a technique that will be used throughout this course to analyze electrical circuits. Current path tracing allows you to identify the critical components in the circuit, predict voltage levels at any point in the circuit and predict the locations of voltage drops (ΔV).

1. a. Using components from the 622 kit, build the following circuit:

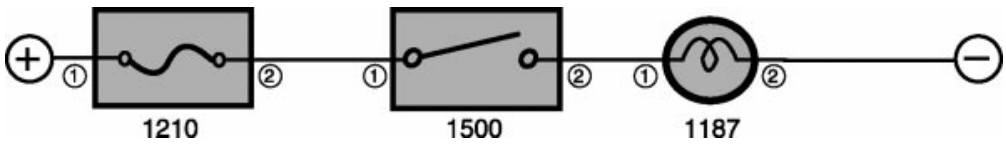

   b. Turn the switch on and make sure the lamp lights.

   c. Turn the switch off.

Using the diagram below:

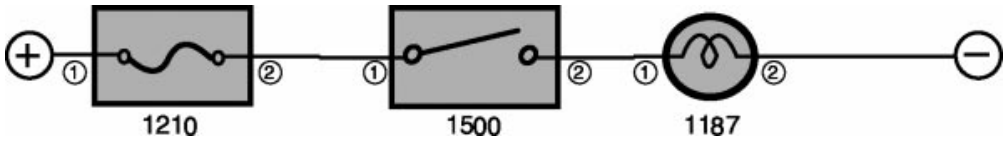

2. a. Use a pink (P for power) highlighter to trace from the voltage source to the open in the circuit.

   b. Use a green (G for ground) highlighter to trace from ground to the open in the circuit.

   c. Does current flow in this circuit?

   _____

   d. Which body electrical rule helps answer this question?

   _____

   e. Why did we change colors at the switch?

   _____

   _____

   _____

3. a. Draw the switch in the closed position and trace from the voltage source to terminal 1 of the #1187 lamp with a pink highlighter.

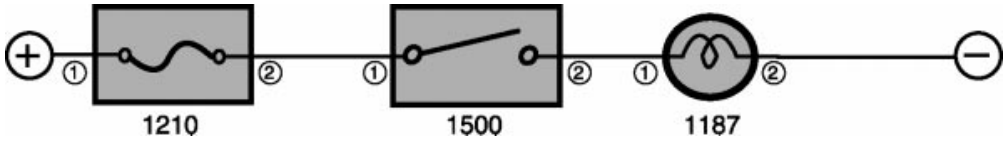

b. Trace from terminal 2 of the load to ground with a green highlighter.

c. Pink represents a part of the circuit where the voltage level is

_____

d. Green represents a part of the circuit where the voltage is level is

_____

e. Does current flow in this circuit?

_____

f. Why did we change colors at the load?

_____

Open Circuit Voltage

4. a. Verify that the circuit built in step 1 is still assembled correctly:

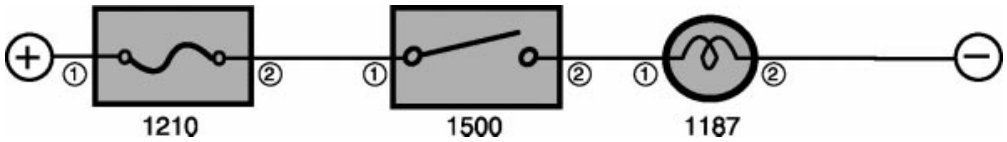

b. Turn the switch on and verify that the lamp lights.

c. Turn the switch **off.**

5. a. Place the red lead of the voltmeter at terminal 1 of the #1500 switch and the black lead on terminal 2 and record the reading.

_____

6. a. Trace the current path for Step 5 on the diagram below:

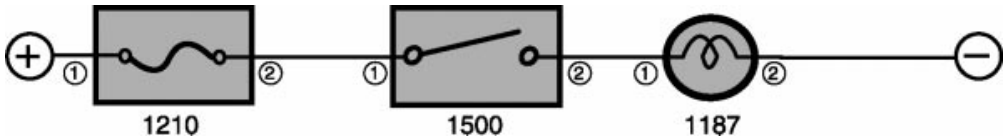

b. Why did the meter read battery voltage on Step 5?
HINT: A voltmeter reads the voltage difference between the red and the black test lead. Voltage at the red (+) test lead minus voltage at the black (-) test lead equals the voltage reading displayed on the meter.

_____

c. Is this an open circuit voltage test or a voltage drop test?
HINT: See the Technician Handbook, page 8.

_____

Voltage Drop (ΔV)

7. a. Turn the switch on and verify that the lamp is illuminated.

b. lace the red test lead on terminal 1 of the #1500 switch and the black test lead on terminal 2 and record the reading.

_____

8. a. Trace the current path for Step 7 on the diagram below:

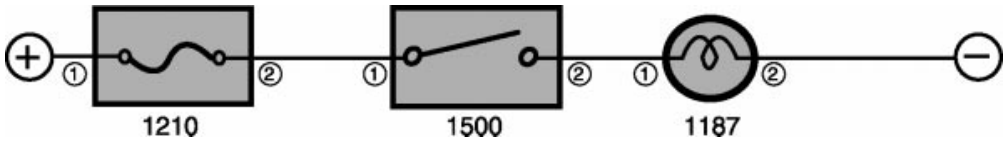

b. Why was the voltage reading on Step 7 very low?

_____

c. Is this test an open circuit voltage test or a voltage drop (ΔV) test?

_____

d. When testing ΔV on a non-load (conductor, control device, circuit protection device etc.) what does a low voltage reading confirm?

_____

9. a. Verify that the circuit built in step 1 is still assembled correctly:

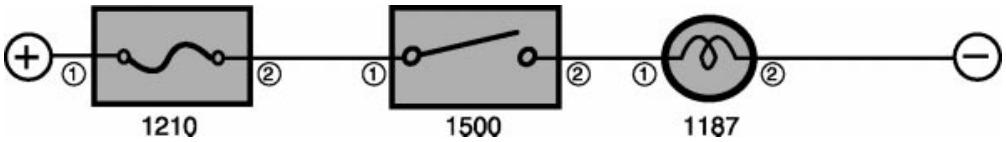

b. Turn the switch on and verify that the lamp lights.

c. Remove the lamp from the socket.

10. Measure and record the open circuit voltage between terminals 1 and 2 of the empty lamp socket.

_____

11. Install the lamp. Measure and record the voltage drop between terminals 1 and 2 of the #1187 lamp.

_____

12. What is the key difference between an open circuit voltage test across an open (step 10) and a voltage drop (ΔV) test across an operating load (step 11)?
HINT: It is not the meter reading. It was the same for both Steps 10 and 11.

_____

13. What does a battery voltage drop across an operating load indicate?

_____

_____

_____

_____

_____

_____

Available Voltage and Voltage Drop (ΔV)

14. a. Measure and record Available Voltage(with the switch closed) at the points listed:
Hint: Red (+) test lead to the test point, Black (-) test lead to ground.

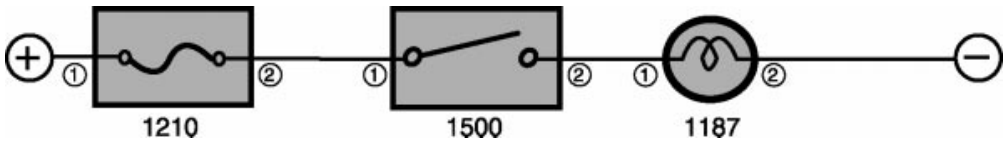

1. Source Voltage _____
2. Terminal 1 of the #1210 fuse _____
3. Terminal 2 of the #1210 fuse _____
4. Terminal 1 of the #1500 switch _____
5. Terminal 2 of the #1500 switch _____
6. Terminal 1 of the #1187 lamp _____
7. Terminal 2 of the #1187 lamp _____

b. What does reading 6 (terminal 1 of the #1187 lamp) indicate?

_____

c. What does reading 7 (terminal 2 of the #1187 lamp) indicate?

_____

15. a. Measure and record the Voltage drop across the components listed:
HINT: Red (+) test lead to terminal 1 of the component and the Black (-) test lead to terminal 2 of the component.

#1210 fuse _____

#1500 switch _____

#1187 lamp _____

b. What is indicated by a low Voltage Drop at the #1210 fuse and the #1500 switch and a high Voltage drop at the #1187 lamp?

_____

_____

c. Do both types of tests (Step 14 Available Voltage & Step 15 ΔV) give you the same information?

_____

16. a. Add a #1152 lamp to the circuit as indicated below:

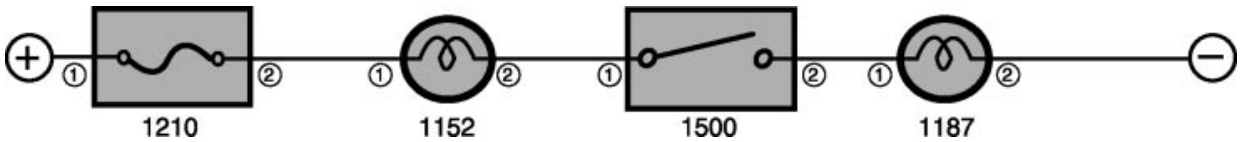

b. Turn the switch on and make sure both lamps light.

c. The #1152 lamp will simulate unwanted resistance between the fuse and the switch in an otherwise normal lamp circuit. In a normal circuit this **unwanted resistance** would not be visible (so pretend that you can't see the #1152 lamp). The next few steps will use Available Voltage and Voltage Drop tests to locate the unwanted resistance.

17. a. The customer concern is a **dim lamp** in this circuit. Can you verify the condition?

_____

b. Trace the current path for a **normal** circuit using the diagram below. When using current path tracing as a diagnostic method you always trace the circuit as it appears in the EWD. The purpose of current path tracing is to learn how a normal circuit works. Then you use your circuit knowledge to find out where the problem circuit is different.

c. Use this trace to predict normal voltage levels for this circuit in the steps below.

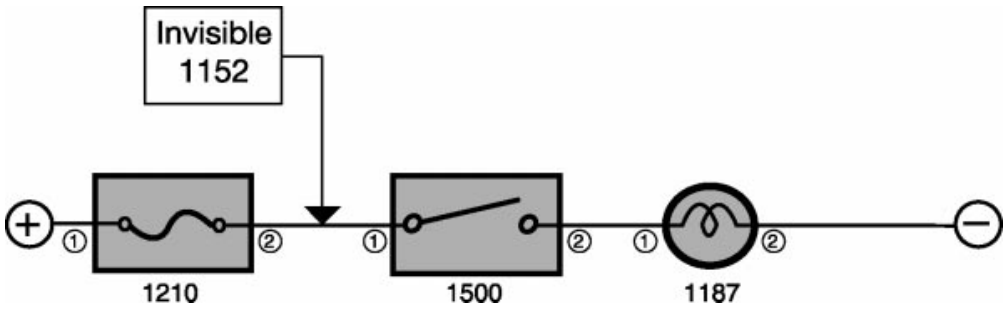

18. a. Based on your current path trace from Step 17b predict the voltage at terminal 1 of the #1187 lamp.

_____

b. Remove the #1187 lamp. Measure and record the Open Circuit Voltage at Terminal 1 of the empty socket.

_____

c. What does this reading indicate?

_____

_____

_____

d. Install the lamp.

19. a. Based on the trace from step 17b, predict the Voltage Drop (ΔV) across the #1187 lamp.

_____

b. Measure and record source voltage.

_____

c. Measure and record ΔV across #1187 **lamp.**

_____

Note: Leave the meter leads connected to the circuit after taking this reading.

d. What does this reading indicate?

_____

_____

20. a. Based on the current path trace from Step 17b, predict the Available Voltage (for a normal circuit) at terminal 1 of the #1187 lamp.

_____

b. Move the Black (-) test lead to ground, measure and record Available Voltage at terminal 1 of the #1187 lamp.

_____

c. What does this reading indicate?

_____

_____

21. a. Based on the current path trace from Step 17b, predict the available voltage (for a normal circuit) at the following points.

Terminal 2 of the #1500 switch: _____

Terminal 1 of the #1500 switch: _____

Terminal 2 of the #1210 fuse: _____

Terminal 1 of the #1210 fuse: _____

b. Measure and record Available Voltage at these points.

Terminal 2 of the #1500 switch: _____

Terminal 1 of the #1500 switch: _____

Terminal 2 of the #1210 fuse: _____

Terminal 1 of the #1210 fuse: _____

c. What do these readings indicate?

_____

_____

22. a. Based on the trace from Step 17b, predict ΔV from terminal 2 of the #1210 fuse to terminal 1 of the #1500 switch.

_____

b. Measure the ΔV from terminal 2 of the #1210 fuse to terminal 1 of the #1500 switch.

_____

c. What does this reading indicate?

_____

d. Do both types of tests (Step 21b Available Voltage and Step 22b ΔV) give you the same information?

_____

_____

Series Circuits

Hint: See the Series Circuit rules on pages 6 and 7 of this handbook.

23. a. Using components from the L622 kit, build the following circuit:

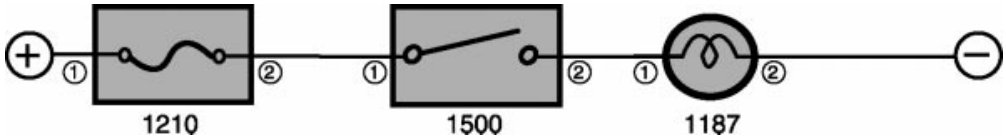

b. Close the switch and make sure the lamp lights.

c. Trace the current path for this circuit.

d. Measure and record voltage readings at the following points:

Source voltage: _____

ΔV between terminals 1 and 2 of the #1500 switch: _____

ΔV between terminals 1 and 2 of the #1187 lamp: _____

e. Do the meter readings match your current path trace predictions?

_____

If there is only one load in the circuit, all the voltage is used up in that load.

24. a. Add a #1152 bulb to the circuit as shown below:

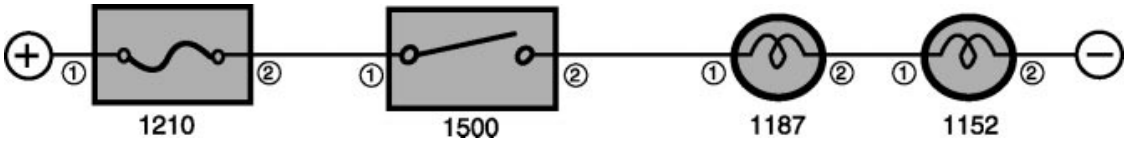

b. Close the switch and verify that both lamps light, then turn the lamps off.

c. Disconnect the lamps from the circuit, then measure and record the resistance of each lamp.

#1187 _____

#1152 _____

d. Why is it necessary to disconnect the components before measuring resistance?

_____

e. Connect the lamps to the circuit and close the switch.

f. Which lamp is brighter?

_____

g. Measure and record the ΔV of each lamp:

#1187 _____

#1152 _____

h. Trace the current path for this circuit.

i. What is the voltage between the lamps (the part of the circuit traced in blue)?

_____

If there are multiple loads in the circuit, voltage is divided according to the resistance of the loads. The load with the most resistance will use the most voltage; the load with the least resistance will use the least voltage. The voltage used is directly proportional to the resistance.

25. Using the circuit built for Step 24, measure and record the current (A) at the following points:

    Between terminal 2 of the #1500 switch and terminal 1 of the #1187 lamp: _____

    Between terminal 2 of the #1187 lamp and terminal 1 of the #1152 lamp: _____

    Between terminal 2 of the #1152 lamp and ground: _____

Amperage is the same throughout the circuit. This means that an ammeter can be connected anywhere in the circuit and measure the Amperage.

26. a. Using components from the L622 kit, build the circuit shown below:

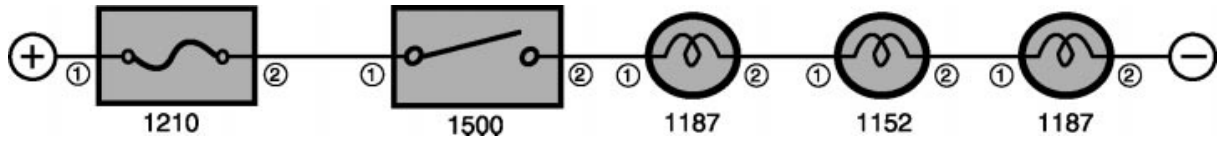

    b. Close the switch and verify that all three lamps light.

    c. Trace the current path for this circuit.

d. Measure and record the following readings:

Current (A): _____

ΔV across the first #1187 lamp: _____

ΔV across the #1152 lamp: _____

ΔV across the second #1187 lamp: _____

e. Compare the current (A) for this circuit with the reading from Step 25.

Total resistance is the sum of all the resistance in the circuit. Adding a resistance in series will increase total circuit resistance and decrease current (A).

Parallel Circuits

Hint: See the parallel circuit rules on page 7 of the Technician Handbook

27. a. Using components from the L622 kit, build the circuit shown below:

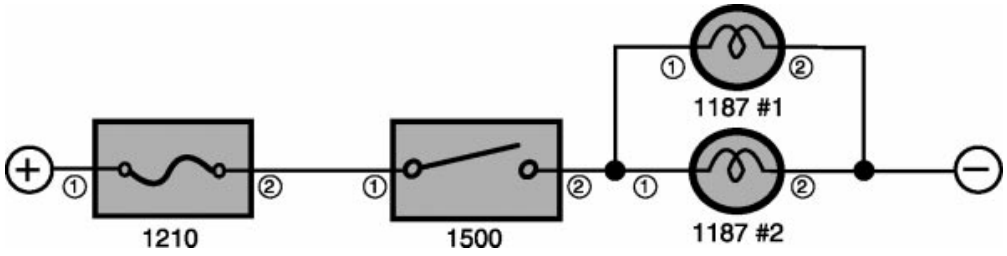

b. Trace the current path for this circuit.

c. Measure and record the Available Voltage at terminal 1 of each #1187 lamp:

#1187 #1 _____

#1187 #2 _____

The voltage applied to each branch is the same.

28. Using the circuit built for Step 27, measure and record the current between the following points:

    Terminal 2 of the #1210 fuse and terminal 1 of the #1500 switch: _____

    Terminal 2 of the #1500 switch and terminal 1 of 1187 #1: _____

    Terminal 2 of the #1500 switch and terminal 1 of 1187 #2: _____

29. a. Using components from the L622 kit, build the circuit shown below:

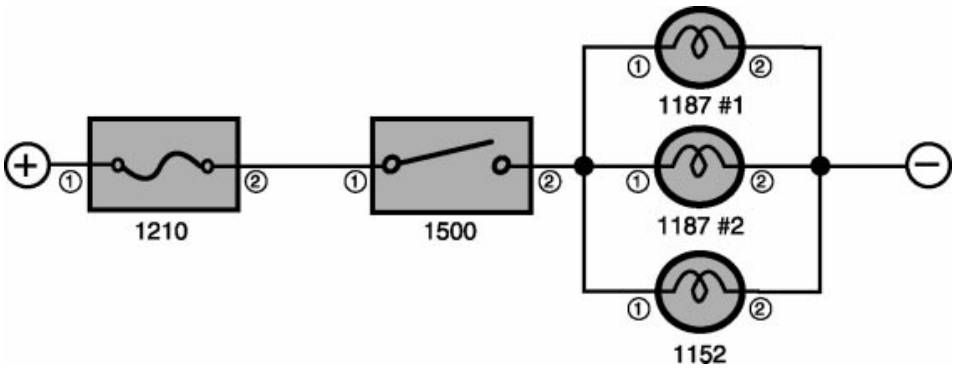

    b. Trace the current path for this circuit.

    c. Disconnect the lamps from the circuit and measure and record their resistances:

    #1187 #1 _____

    #1187 #2 _____

    #1152 _____

    d. Why is it necessary to disconnect the lamps to measure their resistance?

    _____

    e. Install the lamps and close the switch. Verify that all 3 lamps light.

    f. Measure and record the current between the following points:

    Terminal 2 of the #1210 fuse and terminal 1 of the #1500 switch: _____

    Terminal 2 of the #1500 switch and terminal 1 of 1187 #1: _____

    Terminal 2 of the #1500 switch and terminal 1 of 1187 #2 _____

    Terminal 2 of the #1500 switch and terminal 1 of the #1152 lamp: _____

The current in a branch is determined by the branch's resistance. The branch with the least resistance will have the most current.

30. a. Compare total current for Step 28 and Step 29:

Total current for Step 28: _____

Total current for Step 29: _____

Total resistance decreases as branches are added. Adding a branch lowers total resistance and increases current. The total circuit resistance is always lower than the lowest branch resistance.

Series-Parallel Circuits

31. a. Using components from the L622 kit, build the following circuit:
Note: This circuit is a simulation of the horn circuit for the 1998 ES 300. Lamps are substituted for horns, otherwise the circuit is functionally identical.

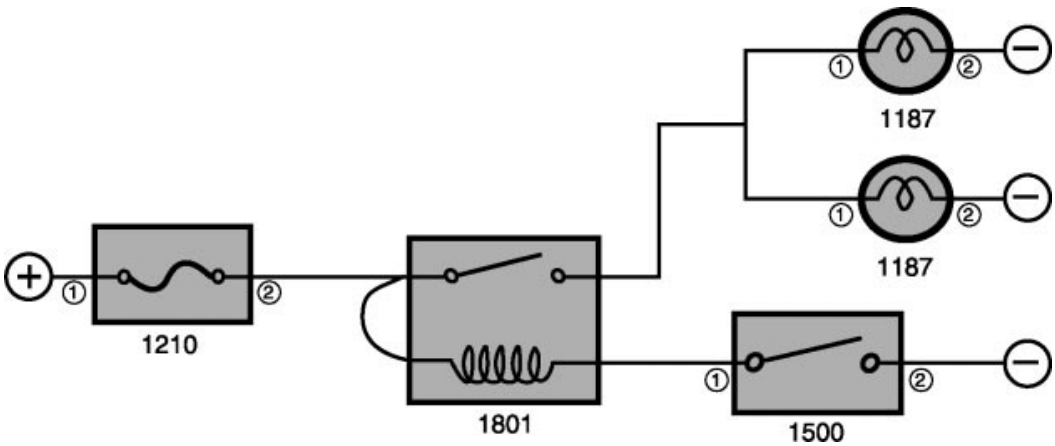

b. Which meter function would help to identify the terminals of the relay?

_____

c. Turn the switch on and off and verify that the lamps light.

32. a. Using the diagram below, trace the current path for this circuit when the lamps are off.

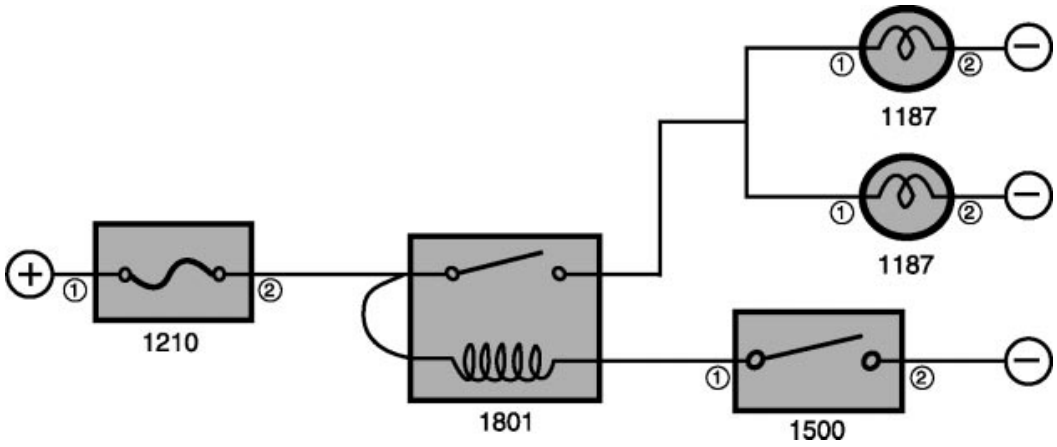

b. Predict the voltage at terminal 1 of the #1500 switch when the lamps are off.

_____

c. Measure and record the voltage at terminal 1 of the #1500 switch when the lamps are off.

_____

33. a. Using the diagram below, trace the current path for this circuit when the lamps are on.

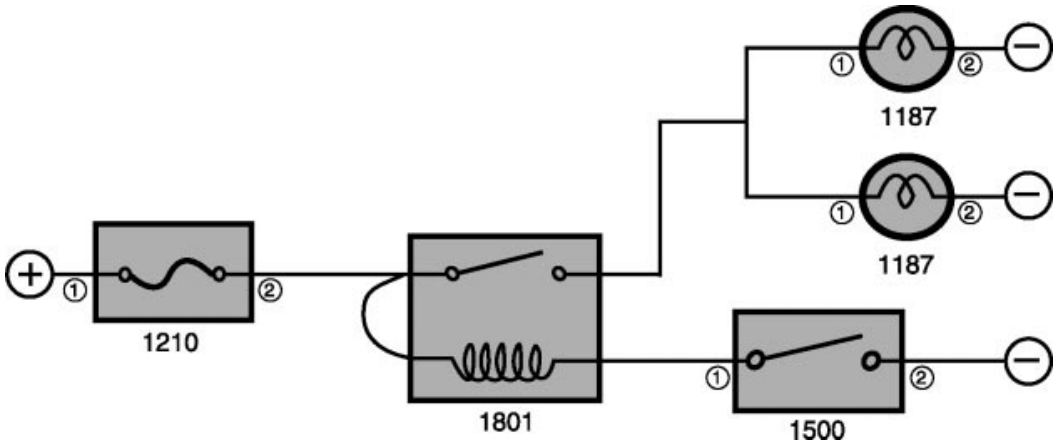

b. Predict the voltage at terminal 1 of the #1500 switch when the lamps are on.

_____

c. Measure and record the voltage at terminal 1 of the #1500 switch when the lamps are on.

_____

34. Using the 1998 ES300 horn circuit diagrams provided below:

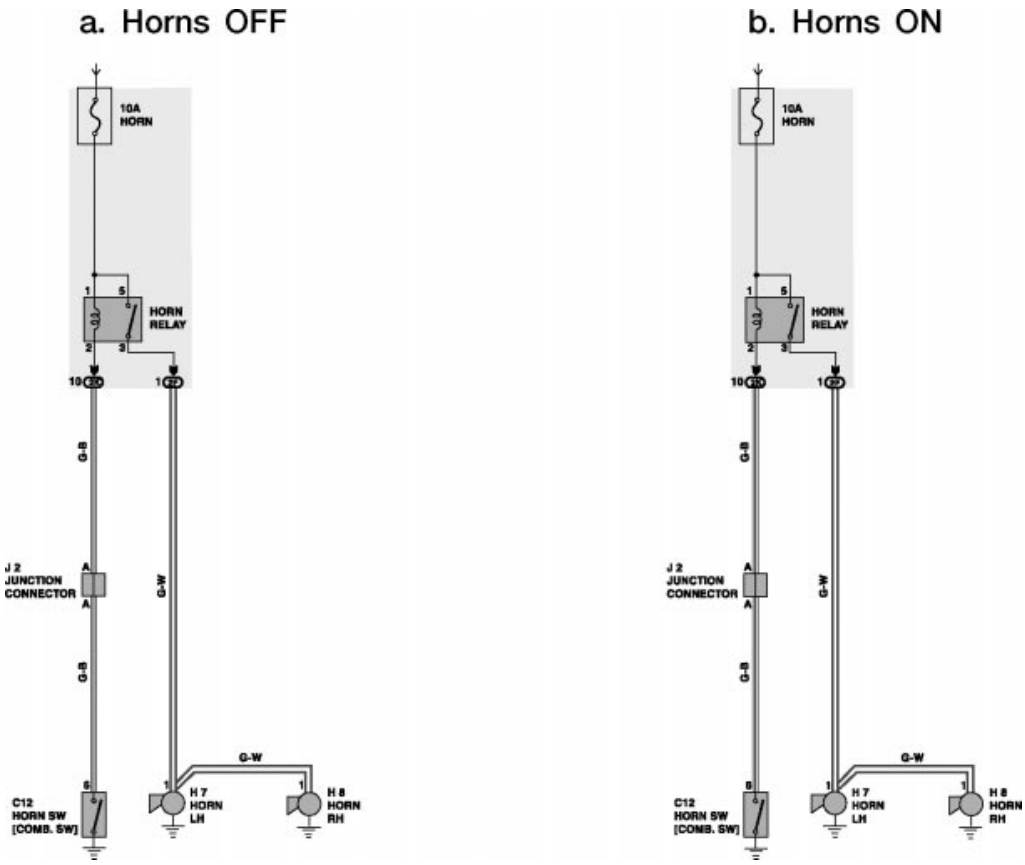

a. Trace the current path with the horns off.

b. Trace the current path with the horns on.

35. Refer to the current path traces from Step 35 to answer the following questions:

a. Why is there battery voltage at connector C12, terminal 6 of the switch when the horns are off?

_____

_____

b. What does a battery voltage reading at connector C12, terminal 6, horns off, tell you about the circuit?

_____

_____

c. Where would your next test point be if you did not measure battery voltage at connector C12, terminal 6, with the horns off?

_____

d. Why is there low voltage at connector C12, terminal 6, when the horns are on?

_____

_____

e. If both horns were inoperative, where would you test first?

_____

_____

f. If only one horn was inoperative, would you test the relay or the switch?

_____

_____

Problems in the series portion of a series-parallel circuit affect the entire circuit. Problems in a parallel branch of a series parallel circuit affect only the branch where the problem is.

Notes

Electrical Basics

Name: _____ Date: _____

Review this sheet as you are doing the *Electrical Basics* worksheet. Check each category after viewing the instructor's presentation and completing the worksheet. Ask the instructor if you have questions regarding the topics provided below. Additional space is provided under topic for you to list any other concerns that you would like your instructor to address. The comments section is provided for your personal comments, information, questions, etc.

I have questions

I know I can

Topic			Comment
Identify electrical symbols used in the EWD.			
Apply the 6-Step Troubleshooting Process to affect a repair.			
Define Voltage, Amperage, and Resistance.			
Apply Ohm's Law to identify Open, Short, or High Resistance conditions in a circuit.			
Demonstrate the correct procedures for measuring Voltage, Amperage, and Resistance			
Provide a trace of the Current Flow through a circuit			
Define and measure Open Circuit Voltage			
Define and measure available Voltage and Voltage Drop in Series, Parallel, and Series-Parallel Circuits			

Notes

Section 2

Using the Electrical Wiring Diagram

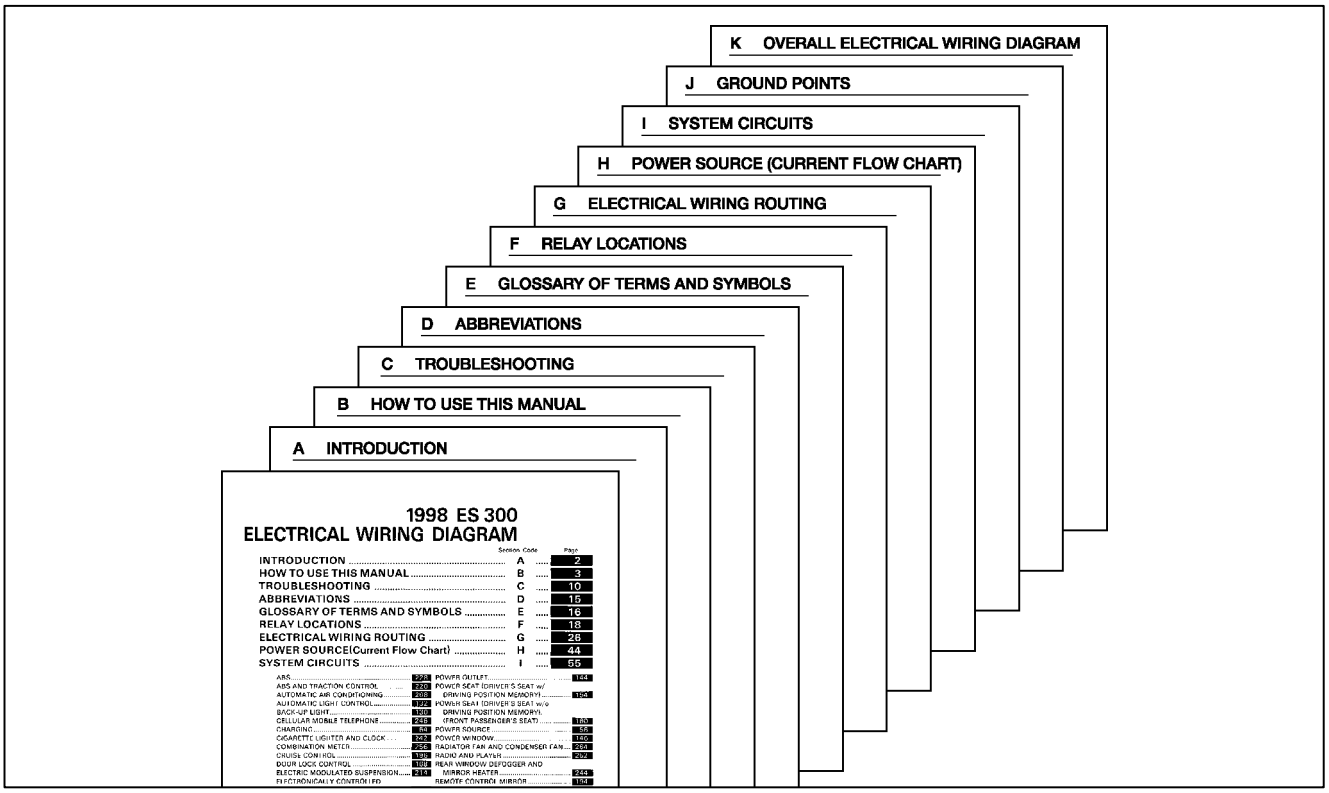

Learning Objectives:

1. Introduce the features of each EWD section.
2. Explain how to use the System Circuit Diagram
3. Explain how the System Circuit Diagram works with the additional support sections in the EWD.
4. Show how to apply the System Circuit Diagrams and support sections in the diagnostic process
5. Explain and practice the process of tracing current flow in a circuit.

Notes

Introduction

One of the keys to a quick and successful electrical diagnosis is correctly using the **Lexus Electrical Wiring Diagram or EWD**. The EWD is not just a book of wiring diagrams, but an *information resource for anything electrical* on the vehicle. Everything from connector ID and location to what circuits share splice points is included in this manual.

Because there is so much information, it takes a little practice to learn where it is located, and what each of the EWD symbols and individual sections can tell you. We will take a detailed look at all of these features, and how to use them in diagnosing an electrical problem.

NOTE

As you follow your instructor's "tour" of the EWD Sections, it is recommended that you use the **actual EWD, instead of this Technician Handbook**. This way, you will be getting a "feel" for the actual tool that you have at your dealership.

Sections of the EWD (Through 1998 MY)

The EWD is an invaluable tool when diagnosing an electrical problem. Knowing where specific information is, and the "system" that the book uses helps to speed up the diagnostic process.

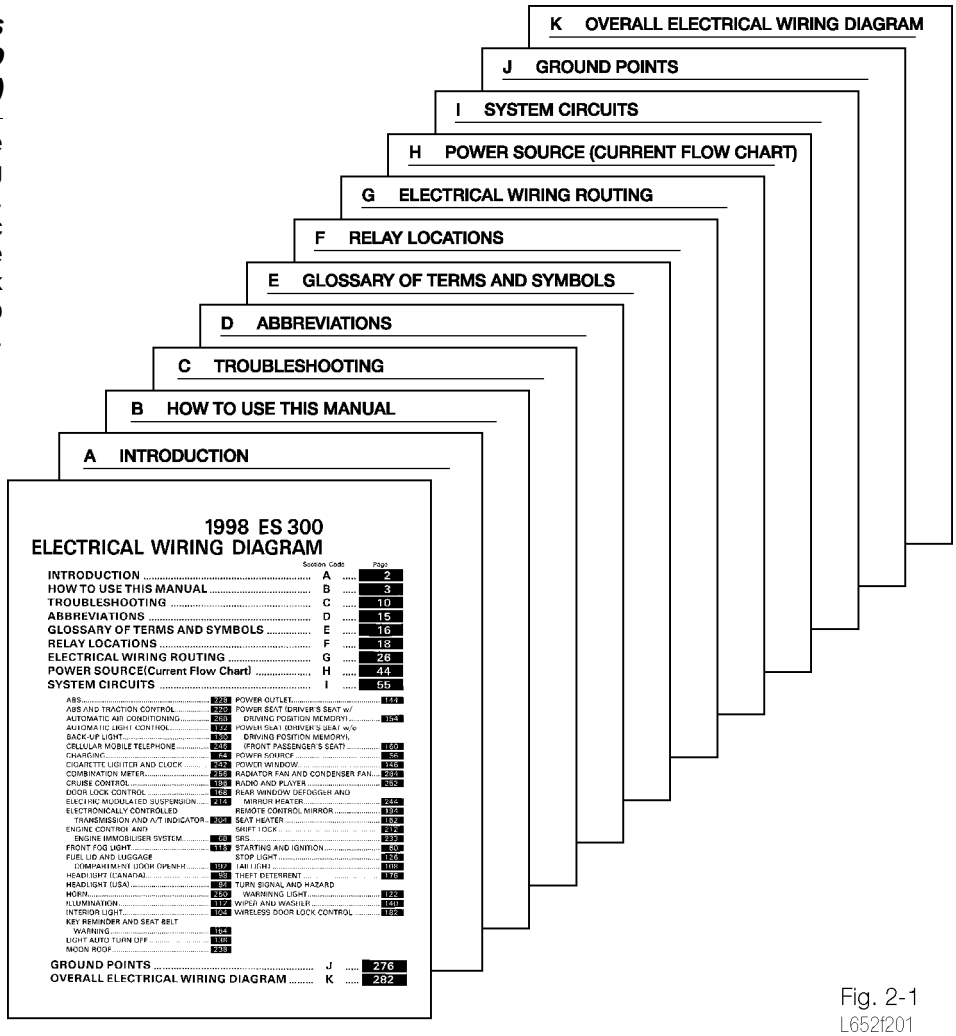

Fig. 2-1
L652f201

Sections of the EWD (Starting 2000 MY)

Starting in the 2000 Model Year, the EWD sections have been rearranged and some new sections have been added.

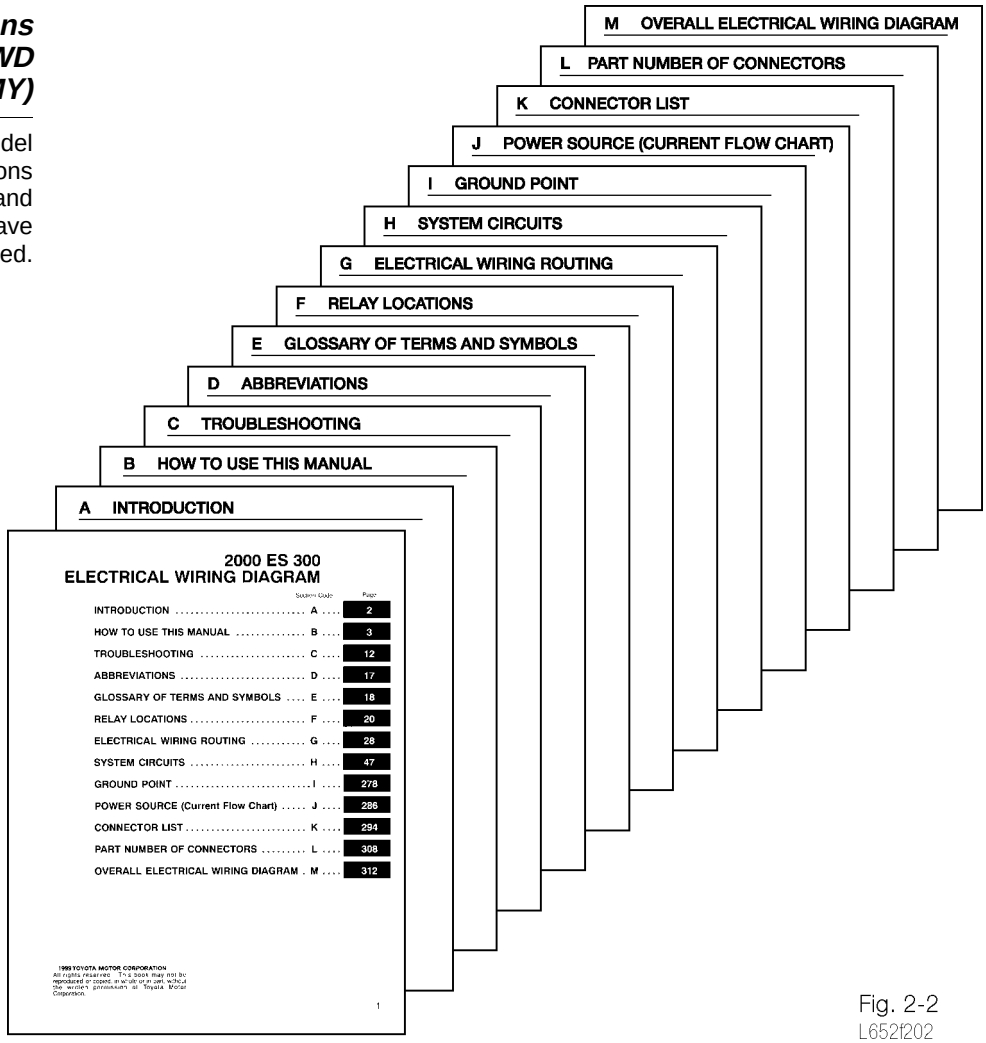

Fig. 2-2
L652f202

The Table of Contents

With the large number of pages and sections in the EWD, the fastest way to find the wiring diagram or information you need is to use the **Table of Contents**.

There are two table of contents that are available. One is on the title page of the book. This lists all of the sections (1998 MY = A-K; 2000 MY = A-M) and also has an *alphabetical list* of all the **System Circuit Diagrams** located in Section I. These wiring diagrams are the "heart" of the EWD, and the place to start when diagnosing an electrical problem. There is also a listing of each System Circuit Diagram on the first page of Section I.

Table of Contents

The Table of Contents is found on the title page of the EWD. A second table of contents for just the System Circuit Diagrams is found at the beginning of Section I (Section H starting with 1999 MY).

1998 ES 300
ELECTRICAL WIRING DIAGRAM

	Section Code	Page
INTRODUCTION	A	2
HOW TO USE THIS MANUAL	B	3
TROUBLESHOOTING	C	10
ABBREVIATIONS	D	15
GLOSSARY OF TERMS AND SYMBOLS	E	16
RELAY LOCATIONS	F	18
ELECTRICAL WIRING ROUTING	G	26
POWER SOURCE(Current Flow Chart)	H	44
SYSTEM CIRCUITS	I	55

ABS 228
ABS AND TRACTION CONTROL 220
AUTOMATIC AIR CONDITIONING 268
AUTOMATIC LIGHT CONTROL 132
BACK-UP LIGHT 130
CELLULAR MOBILE TELEPHONE 246
CHARGING 64
CIGARETTE LIGHTER AND CLOCK 242
COMBINATION METER 256
CRUISE CONTROL 198
DOOR LOCK CONTROL 188
ELECTRIC MODULATED SUSPENSION 214
ELECTRONICALLY CONTROLLED TRANSMISSION AND A/T INDICATOR 204
ENGINE CONTROL AND ENGINE IMMOBILISER SYSTEM 68
FRONT FOG LIGHT 118
FUEL LID AND LUGGAGE COMPARTMENT DOOR OPENER 192
HEADLIGHT (CANADA) 98
HEADLIGHT (USA) 94
HORN 250
ILLUMINATION 112
INTERIOR LIGHT 104
KEY REMINDER AND SEAT BELT WARNING 164
LIGHT AUTO TURN OFF 136
MOON ROOF 238
POWER OUTLET 144
POWER SEAT (DRIVER'S SEAT w/ DRIVING POSITION MEMORY) 154
POWER SEAT (DRIVER'S SEAT w/o DRIVING POSITION MEMORY), (FRONT PASSENGER'S SEAT) 160
POWER SOURCE 56
POWER WINDOW 146
RADIATOR FAN AND CONDENSER FAN 264
RADIO AND PLAYER 252
REAR WINDOW DEFOGGER AND MIRROR HEATER 244
REMOTE CONTROL MIRROR 194
SEAT HEATER 152
SHIFT LOCK 212
SRS 233
STARTING AND IGNITION 60
STOP LIGHT 126
TAILLIGHT 108
THEFT DETERRENT 176
TURN SIGNAL AND HAZARD WARNINNG LIGHT 122
WIPER AND WASHER 140
WIRELESS DOOR LOCK CONTROL 182

GROUND POINTS	J	276
OVERALL ELECTRICAL WIRING DIAGRAM	K	282

© 1997 TOYOTA MOTOR CORPORATION
All rights reserved. This book may not be reproduced or copied, in whole or in part, without the written permission of Toyota Motor Corporation.

1

1999 ES 300
ELECTRICAL WIRING DIAGRAM

	Section Code	Page
INTRODUCTION	A	2
HOW TO USE THIS MANUAL	B	3
TROUBLESHOOTING	C	10
ABBREVIATIONS	D	15
GLOSSARY OF TERMS AND SYMBOLS	E	16
RELAY LOCATIONS	F	18
ELECTRICAL WIRING ROUTING	G	26
SYSTEM CIRCUITS	H	45
GROUND POINTS	I	296
OVERALL ELECTRICAL WIRING DIAGRAM	J	302
POWER SOURCE (Current Flow Chart)	K	
PART NUMBER OF CONNECTORS	L	

1998 TOYOTA MOTOR CORPORATION
All rights reserved. This book may not be reproduced or copied, in whole or in part, without the written permission of Toyota Motor Corporation.

1

2000 ES 300
ELECTRICAL WIRING DIAGRAM

	Section Code	Page
INTRODUCTION	A	2
HOW TO USE THIS MANUAL	B	3
TROUBLESHOOTING	C	12
ABBREVIATIONS	D	17
GLOSSARY OF TERMS AND SYMBOLS	E	18
RELAY LOCATIONS	F	20
ELECTRICAL WIRING ROUTING	G	28
SYSTEM CIRCUITS	H	47
GROUND POINT	I	278
POWER SOURCE (Current Flow Chart)	J	286
CONNECTOR LIST	K	294
PART NUMBER OF CONNECTORS	L	308
OVERALL ELECTRICAL WIRING DIAGRAM	M	312

1999 TOYOTA MOTOR CORPORATION
All rights reserved. This book may not be reproduced or copied, in whole or in part, without the written permission of Toyota Motor Corporation

1

Fig. 2-3
L652f203

Section I System Circuit Diagrams

The EWD is built around the use of the **System Circuit Diagrams** (Section I through 1998 MY, Section H starting with 1999 MY). These wiring diagrams provide "circuit road maps" for individual circuits or systems on the vehicle. You'll find that there are a lot of advantages to using this type of diagram over the "old-style" *overall wiring diagrams*.

Advantages

- **More Information**
  There is a lot of written information (such as component IDs) on each diagram that works with the **support materials/other Sections** in the manual. Also, the symbols that are used *graphically* give you information about components, connectors, or wires. Understanding the full meaning of the symbols and "ID callouts" will save you time when trying to locate or identify these components on the car.

- **Easier to Use**
  Every diagram shows only one system at a time. The parallel connections to other circuits can be traced using Power Source and Ground Point sections. Tracing current flow through the circuit is also easier because the **power is at the top** and the **ground is at the bottom** of each page.

- **Printed in Color**
  Because the diagrams are printed in color, identifying the wires shown on the wiring diagram in the vehicle harness or at the connectors is a lot easier.

System Circuit Diagrams

The entire EWD is built around the System Circuit Diagram. Every number, letter, shape, and shading on the diagram tells you information that can help you to locate or identify components on the car faster.

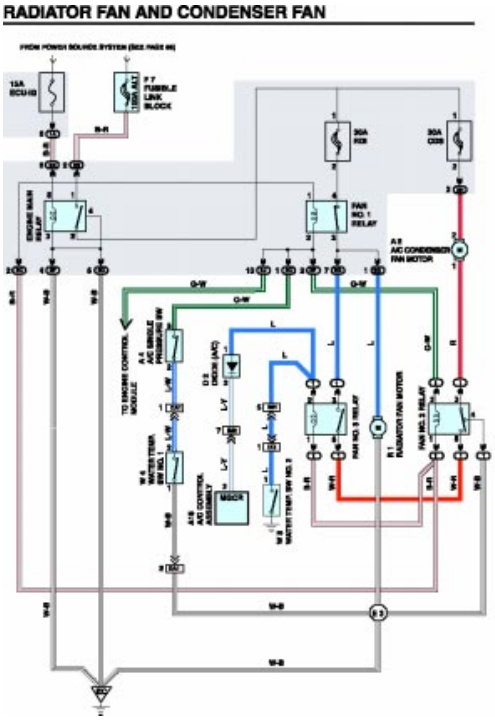

Fig. 2-4
L652f204

Watch for Asterisks*, (Parenthesis), and the Title at the Top

These small notes will make a big difference! These marks alert you to different wiring or connections based upon model, engine type, California, Federal, or Canadian specifications

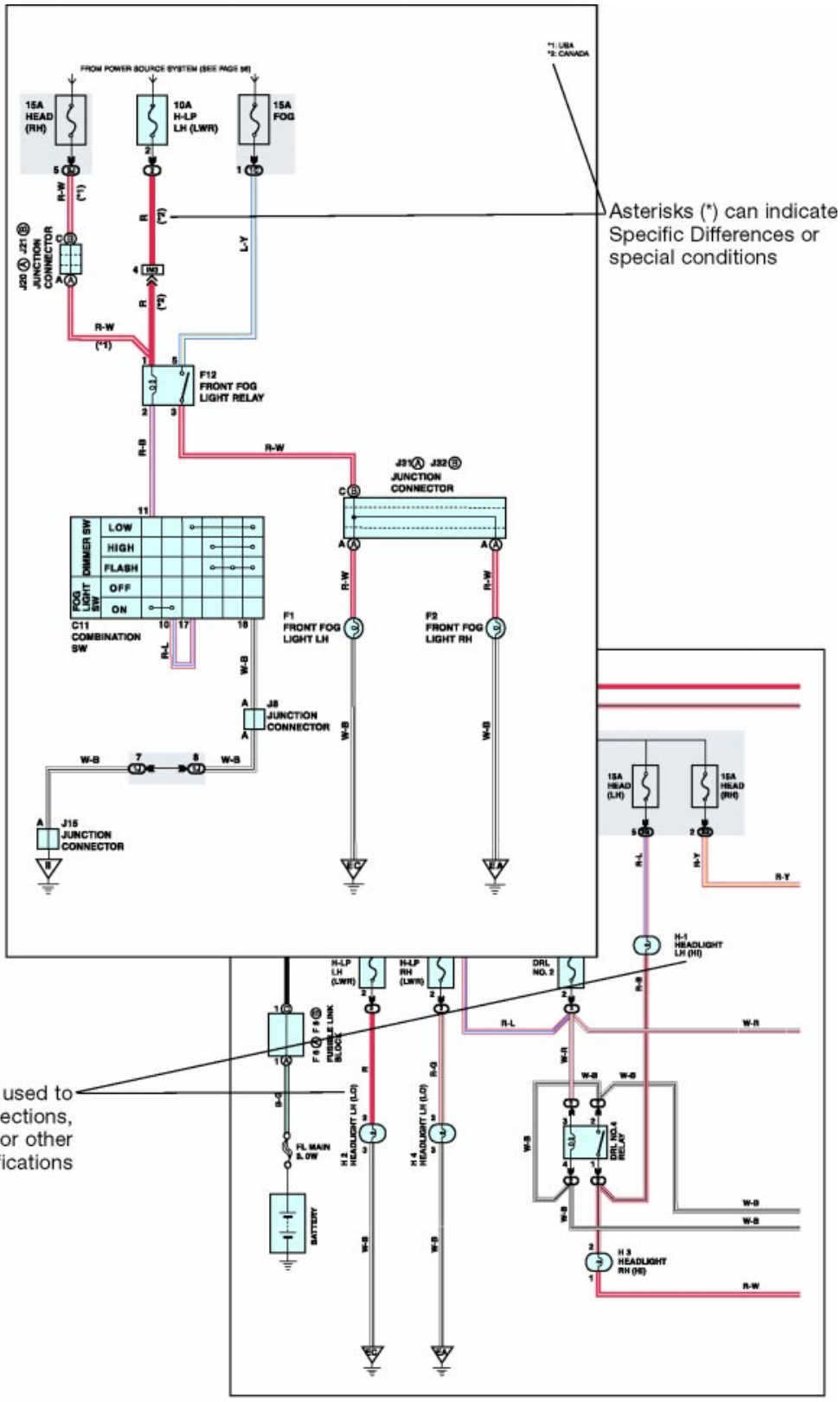

Fig. 2-5
L652f205

Understanding the System Circuit Diagram

On each **System Circuit Diagram**, there is a lot of information that is given to you through the use of different symbols, colors, numbers, and letters. Understanding the meaning behind each of these is very important to effectively use the EWD.

Besides being shown in color, wire colors are also indicated by an alphabetical code next to each of the wires. The first letter represents the basic wire color, and the second letter indicates the color of the "stripe" on the wire.

Wire Colors

- **Blue Wires**
  As you look at the list below, note that the color **blue** is presented by the letter "**L**" to separate it from the letter "**B**" used to identify "black". Also note that there is no "light blue" wire designation used in Lexus wiring harnesses. If it is any shade of blue, its considered **blue (L)**.

- **Component "Pigtails"**
  The wire colors of component "pigtails" (such as on an igniter) **are not shown in the EWD**. The colors in the EWD represent the vehicle harness up to where it is connected to the component.

- **Silver Bands on the Wire Insulation**
  On some wires you will find small silver "bands". These bands (which are not shown on the wiring diagram) indicate that the wire uses a **PVC insulation**. This insulation is lighter in weight and thinner than the normal insulation, making the wire diameter appear smaller than it actually is. (May look like a 20 ga. wire on the outside, but is really a 16 ga. when the wire strands are examined)

Wire Identification

Wires are identified by color and by the letters next to the wire. The letter that follows the "-" is the stripe on the wire. Note that the color BLUE is represented by the letter "L".

B	= Black	Y	= Yellow
BR	= Brown	SB	= Sky Blue
G	= Green	O	= Orange
GR	= Grey	P	= Pink
L	= Blue	R	= Red
LG	= Light Green	V	= Violet
		W	= White

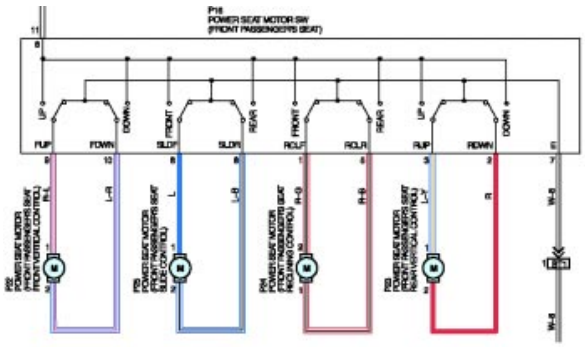

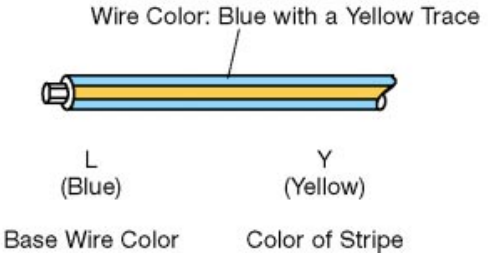

Fig. 2-6
L652f206

Junction Blocks

Junction blocks are used to distribute power and ground to the different circuits. A junction block joins the circuits using layers of insulated, solid metal plates, eliminating the need for many additional splices, and improving reliability.

Key Features

- **Grey Shading**
  Every junction block shown on the wiring diagram is highlighted with grey shading. If there is more than one junction block shown in a single diagram, a different grey shading may be used for each Junction Block.

- **ID Numbers**
  Connections to the J/B are indicated with an oval. The J/B number and the connector number are inside the oval, with pin number just to the left. Use these ID numbers with the **Junction Block and Wire Harness Connector location table** in the support section which follows each wiring diagram. This table has a *written* description of where the J/B is located, and a page number in **Section F Relay Locations** where a complete diagram of the J/B is located.

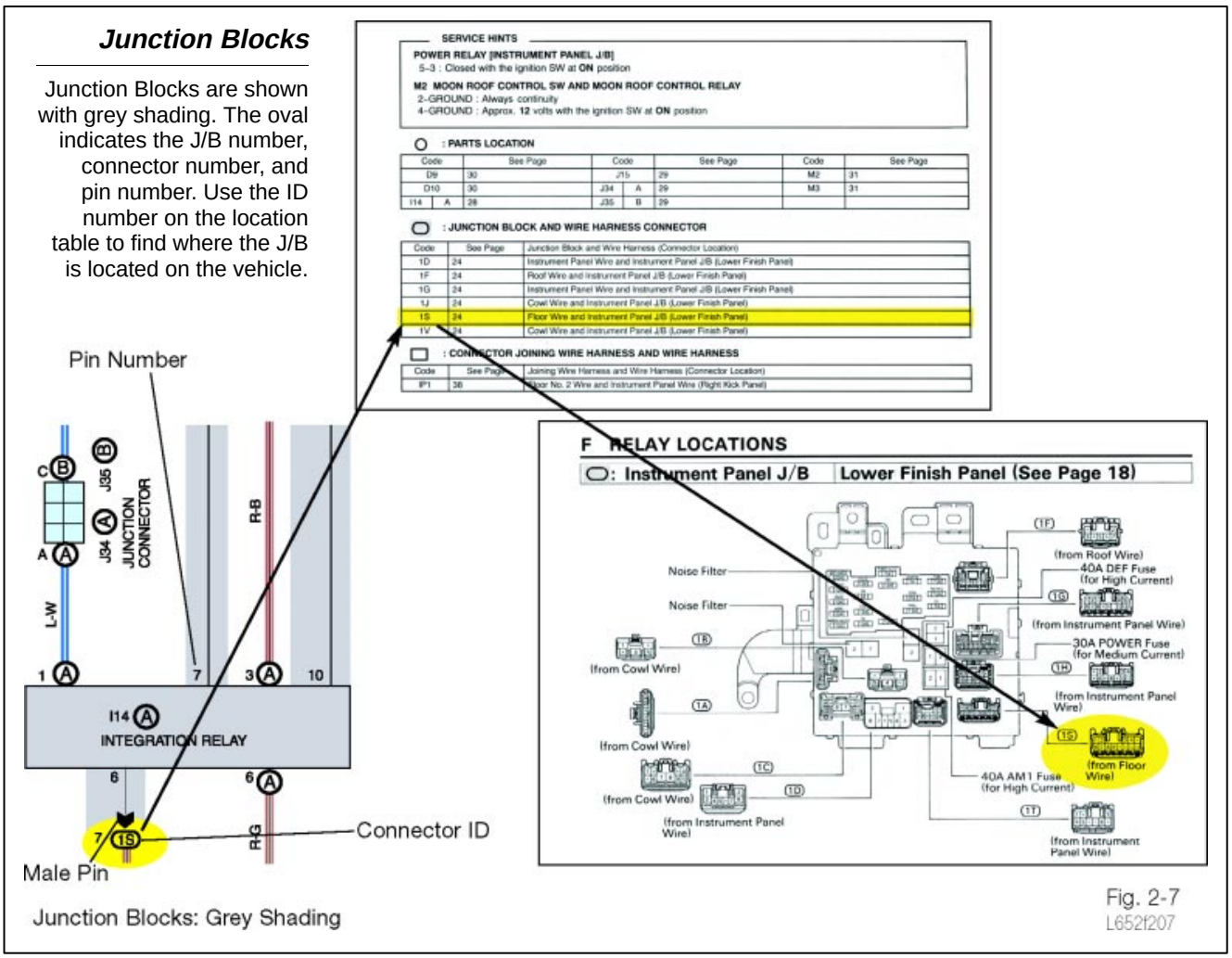

Junction Blocks: Grey Shading

Fig. 2-7
L652f207

Relay Blocks

A **relay block** acts as a central location for relays, harness-to-harness connectors, and fuses. Although similar in appearance to a Junction Block, relay blocks are different because they do not have internal circuits inside to distribute power or ground, like a junction block.

Key Features

- **ID Numbers**
  The ID number in an oval (similar to a J/B), tells you which Relay Block the relay is located in. The connector to each relay is identified only by the relay that it is connected to (there is no individual connector number as on a J/B). Note that the Relay Block ID number sequence is integrated into the same sequence as the Junction Block IDs.
- **No Shading**
  Relay Blocks are not shaded on the diagram like a Junction Block.
- **Location on the Vehicle**
  The location of a Relay Block can be found by matching the ID number on the **Relay Block location table** in the support section that follows each system circuit diagram. This will direct you to a diagram of the relay block located in **Section F** of the EWD.

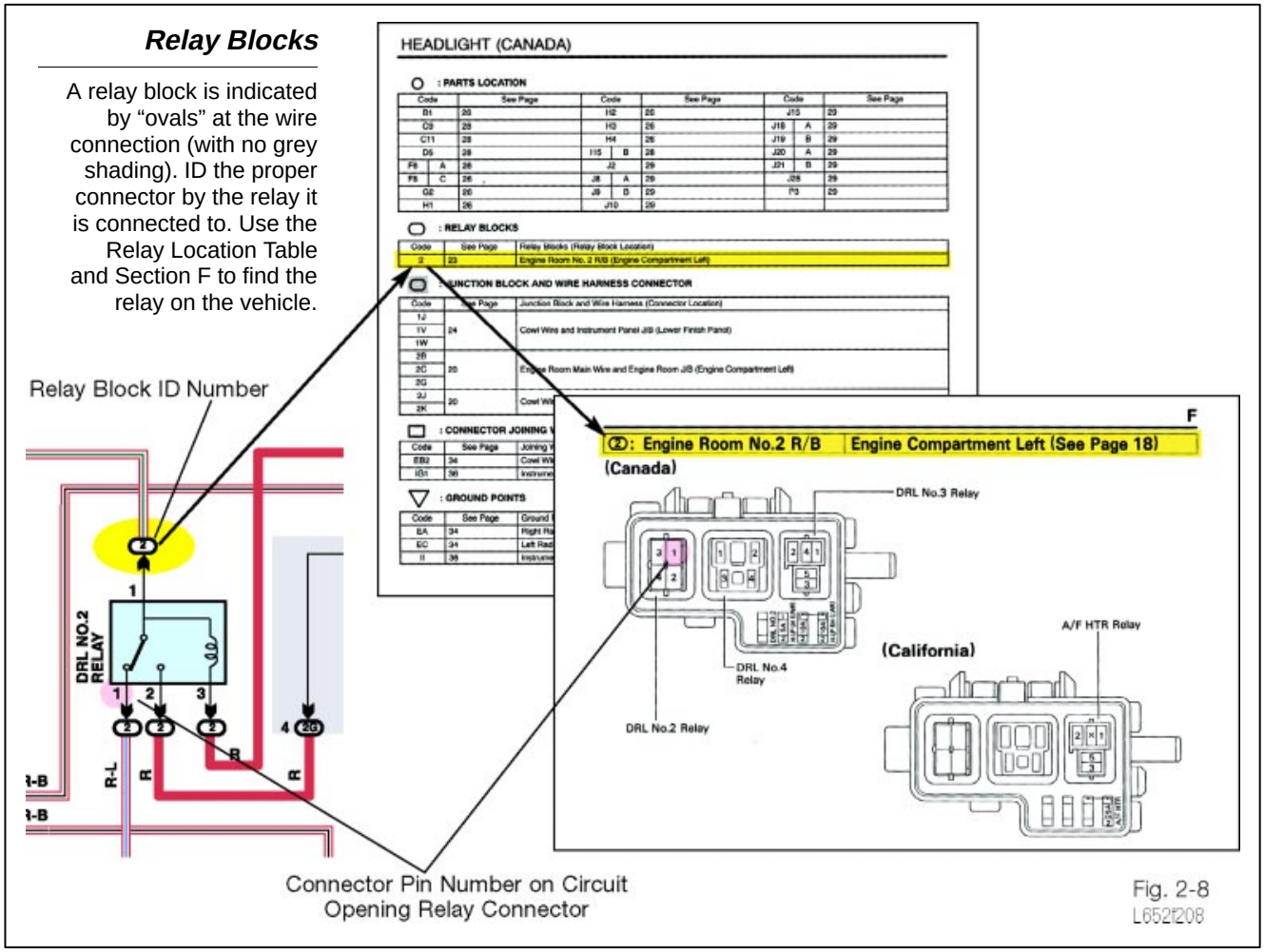

Fig. 2-8
L052f208

Components/ Parts

All loads, relays, switches, ECU-type controllers, capacitors (noise filters) and isolation diodes are treated as component parts in the circuit.

Key Features

- **ID Numbers**
  Each component connector has an ID number. **This ID number usually begins with the first letter of the name of the component.** (This is unlike the splice points and harness-to-harness connectors which use the letters E, I, and B to indicate engine compartment, instrument panel, or body wiring harness location.) Use the ID number with the parts location table that follows each wiring diagram. This will refer you to a harness connector diagram in Section G where the component connector's location is shown. Only component connectors are shown in the system diagram.

- **"Light Blue" Shading**
  Parts are always shaded in blue.

- **Common Connectors**
  When 2 parts or circuits use a common connector (such as the headlight and turn signal circuits using the combination switch connector) the **connector name used in the Section G Wire Routing diagram** is shown in brackets under the component name.

Electrical Components/Parts

All electrical components are shown with connector ID numbers, and light blue shading. If the connector it uses is also part of other circuits, the name called-out in the location diagram is listed in brackets.

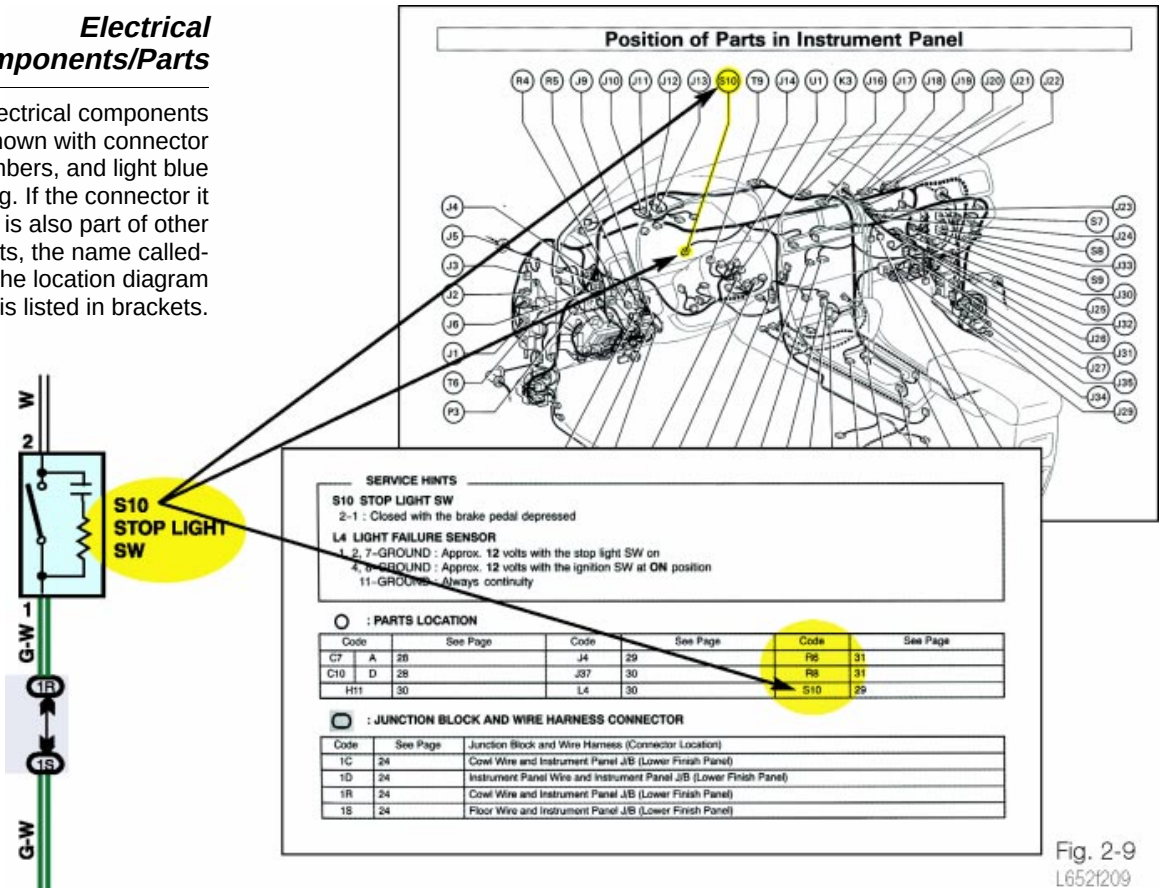

Fig. 2-9
L652f209

Pin Numbers and Connectors

Whenever a wire is connected to an electrical component, the **pin number** is listed next to each wire. These pin numbers correspond to the connector diagrams provided in the support section which follows each wiring diagram.

Key Features

- **Connector ID**
  Connectors at the component are identified by the **component connector ID number**.
- **Connector Color**
  The color of the connector is **white** unless another color is listed.
- **Pin Numbering**
  Connector pin numbers are always shown from the **mating** side of the connector, not the "harness" side of the connector. If you are backprobing the connector for a voltage check, remember that the pin numbering becomes the mirror of what is pictured in the diagram.

HINT

Use the wire color in the wiring diagram to "double check"that you are looking at the correct pin.

- **Dot in the Connector (when available - EWD pre-2000 MY)**
  A "•" in the connector cavity indicates that the cavity is used but by another circuit.
- **X in the Connector (when available - EWD pre-2000 MY)**
  An "X" in the connector indicates that the cavity is empty.
- **Pin numbering on male and female terminals**

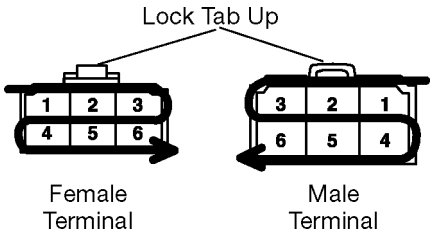

- **Second row numbering begins back under #1**
- **Multiple Connectors on a Single Component**
  If there are multiple connectors on a single component (such as on the TCCS ECM), each connector will have an individual **parts/connector ID** number, and will also be identified with a "**letter in a circle**". This letter in a circle is used as a "shorthand" way to ID the connector next to each of the pins, and is also used on the connector diagrams that follow the System Circuit Diagram.

Pin Numbering on the EWD

Pin numbers are next to the wire. Use the component ID number to find the connector diagram which is part of the support section. The pin numbers are shown from the front or "mating" side of the connector, and not the harness side. If there is more than one connector for a single component, a letter is assigned as a "callout" for that connector.

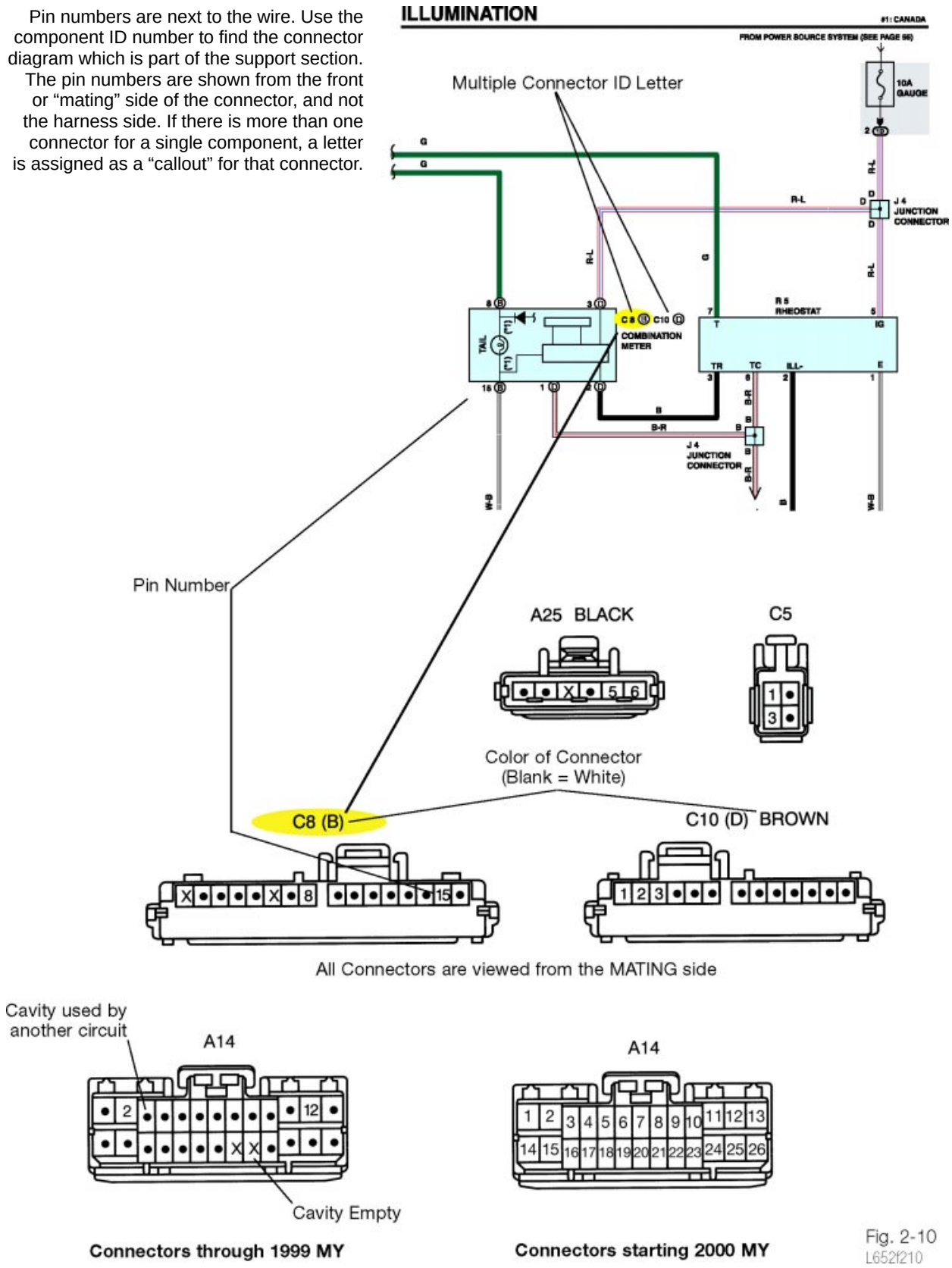

Fig. 2-10
L652f210

Connector Joining Wire Harness to Wire Harness

A **connector joining wire harness to wire harness** or "harness-to-harness connector" is located within the harness, and is not found at an individual component.

- **ID Numbers**
  ID numbers will begin with E for engine, I for instrument panel, and B for body. Use the ID number to find the connector in Section G of the EWD.

- **Connector Diagrams**
  Diagrams for these connectors are not located with the component connectors which follow the wiring diagram. Because these connectors are used in a number of different circuits, all the information about them is located in **Section G** of the EWD. The **Wire Harness Joining Wire Harness** location table describes the location and tells you the page to turn to for the location diagram and connector/pin details.

- **Male and Female Terminals**
  Male and female terminal side of the harness is shown by the shape of the symbol. Male terminals shown with symbol:

Male =

Wire Harness to Wire Harness Connectors

Harness-to-harness connectors use a 3-digit ID number. Information on the connectors is located in Section G of the EWD.

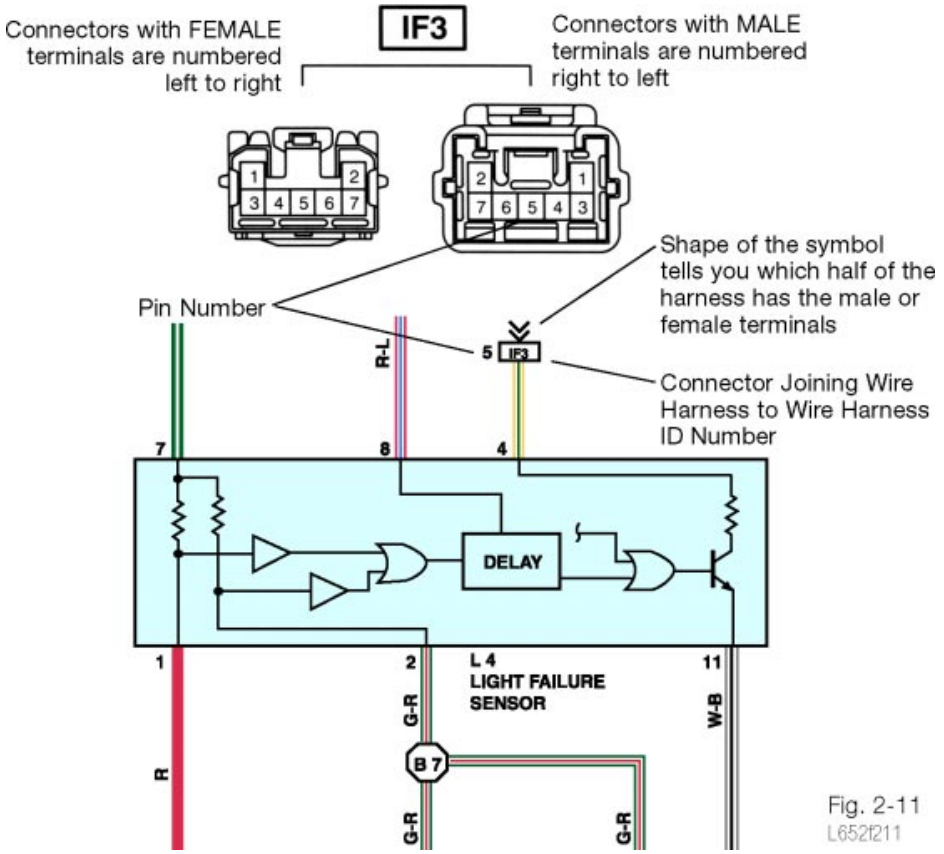

Fig. 2-11
L652f211

Locating a Harness-to-Harness Connector

Use the ID number on the Location Table. Turn to the Section G page for pin numbering and a location diagram.

: JUNCTION BLOCK AND WIRE HARNESS CONNECTOR

Code	See Page	Junction Block and Wire Harness (Connector Location)
1C	24	Cowl Wire and Instrument Panel J/B (Lower Finish Panel)
1D	24	Instrument Panel Wire and Instrument Panel J/B (Lower Finish Panel)
1R	24	Cowl Wire and Instrument Panel J/B (Lower Finish Panel)
1S	24	Floor Wire and Instrument Panel J/B (Lower Finish Panel)

: CONNECTOR JOINING WIRE HARNESS AND WIRE HARNESS

Code	See Page	Joining Wire Harness and Wire Harness (Connector Location)
IF3	36	Floor Wire and Instrument Panel Wire (Left Kick Panel)

: GROUND POINTS

Code	See Page	Ground Points Location
BN	40	Under the Left Center Pillar
BP	40	Back Panel Center

Gives the page in Section G for location

G ELECTRICAL WIRING ROUTING

: Location of Connector Joining Wire Harness and Wire Harness

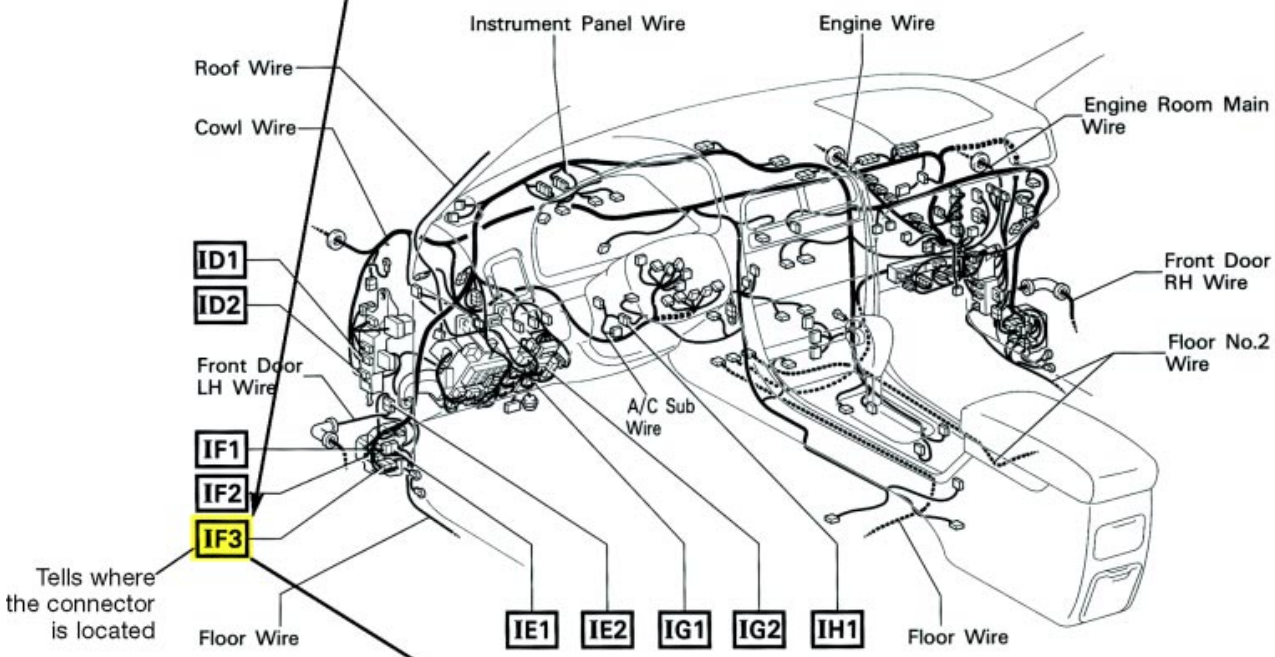

Shows what the connector looks like and pin location

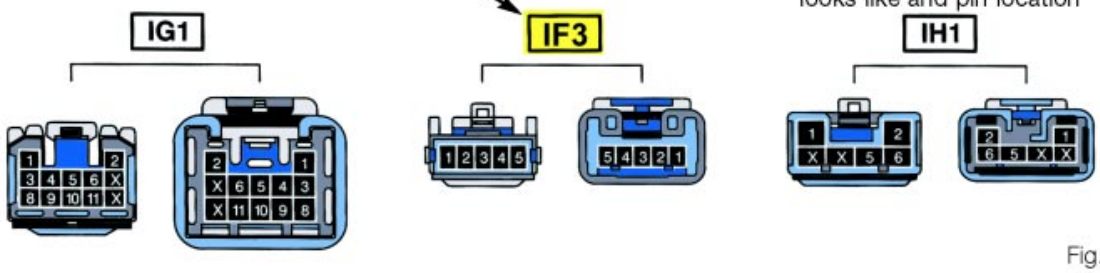

Fig. 2-12
L652f212

Switches and Relays

A simple single-pole, single-throw switch is relatively easy to understand on a wiring diagram. However, if the switch is a *multi-pole* (has more than one pin that is being switched), or *gang* type switch (where the movement of the switch lever moves a number of switches open or closed), the symbol used on the wiring diagram can be more difficult to understand.

Key Features

- **Switches are shown in the Normal position (Key off and out of ignition, doors closed but not locked.)**
  All switches and relays are shown in the Normal position or at rest. If it's a relay, you know that the relay coil is **not "energized"**.
- **Multi-pole Switches**
  For multi-pole switches such as the Combination Switch, or the Heater Fan Switch, the schematic symbol is a little more complicated. A circle and line indicate which pins are connected together under each of the different switch positions. On the Heater Fan Switch, a "bus bar" is moved for each switch position, changing the pin connections in the switch.
- **"Gang" type Switches**
  If it is a fairly simple "gang" type switch, a **dotted line** inside the switch will connect the "arms" of the switches together.

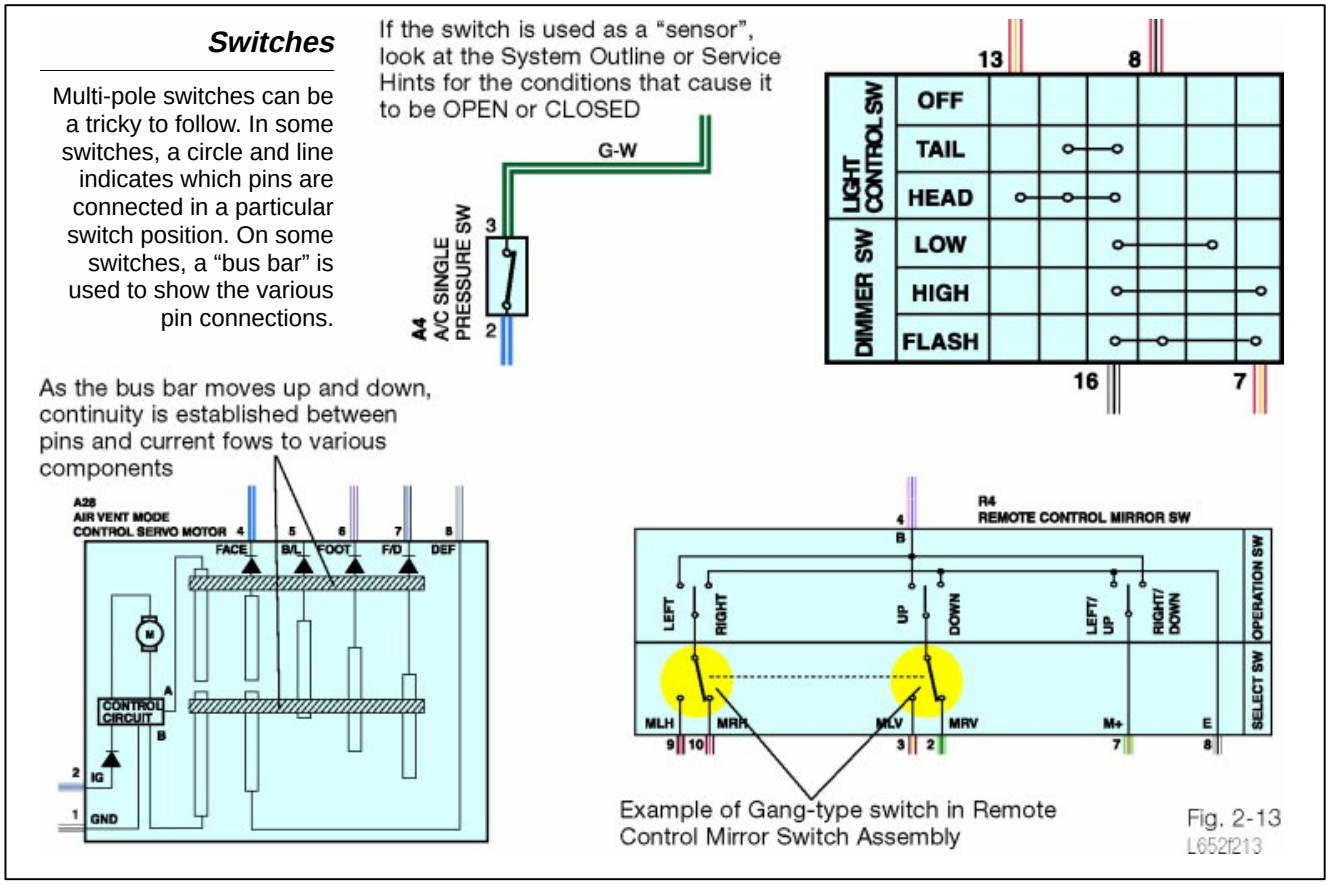

Shielding On low voltage/low current flow wires (such as those used on the oxygen sensor, knock sensor, and distributor G and Ne signals) **shielding** is used. When a wire is shielded, an additional ground wire is wrapped around the insulation of the low current wire to absorb any electro-magnetic interference. In the EWD, shielding is represented by a dotted line around a wire. **Do not confuse this with the dotted line used inside a multi-pole "gang" type switch.**

CAUTION When checking for voltage in a circuit that uses shielded wires, **NEVER puncture the insulation with the test probe!** This will short the sensor wire to the ground.

Shielded Wires

Shielded wires are indicated by a dotted line around a portion of the wire. NEVER probe through the insulation of a shielded wire—a short-to-ground will result.

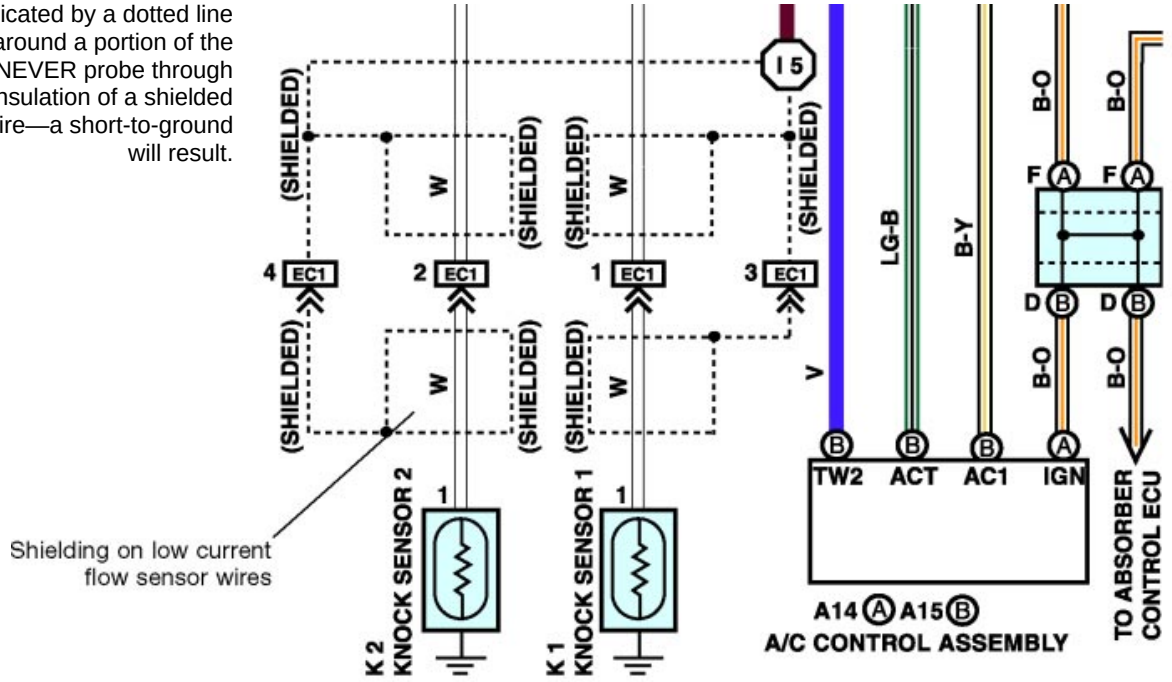

Fig. 2-14
L652f214

Splice Points

In order to distribute power and ground to the various circuits, **splices** within the harness are used. An octagon with an ID number (again with *E* for engine, *I* for instrument panel, and *B* for body, plus a sequential number) is used to represent a splice. This ID number corresponds to the **splice point location table** that follows the wiring diagram. This table has both a description of where the splice is located, and the page number of the Section G location diagram.

NOTE

When making checks on the vehicle, **use connectors and harness-to-harness connectors as your test point of "first choice"**. Splices tend to be difficult to find in the harness because they are wrapped in tape or plastic conduit. Also, the location diagram given in Section G will give you *only a general idea* of where the splice is located. Inspect the individual splice points only if the checks at the connectors "point to" the splice as being the problem.

Splice Point Symbol

A splice point is represented by an "octagon". Use the ID number to find the location of the splice.

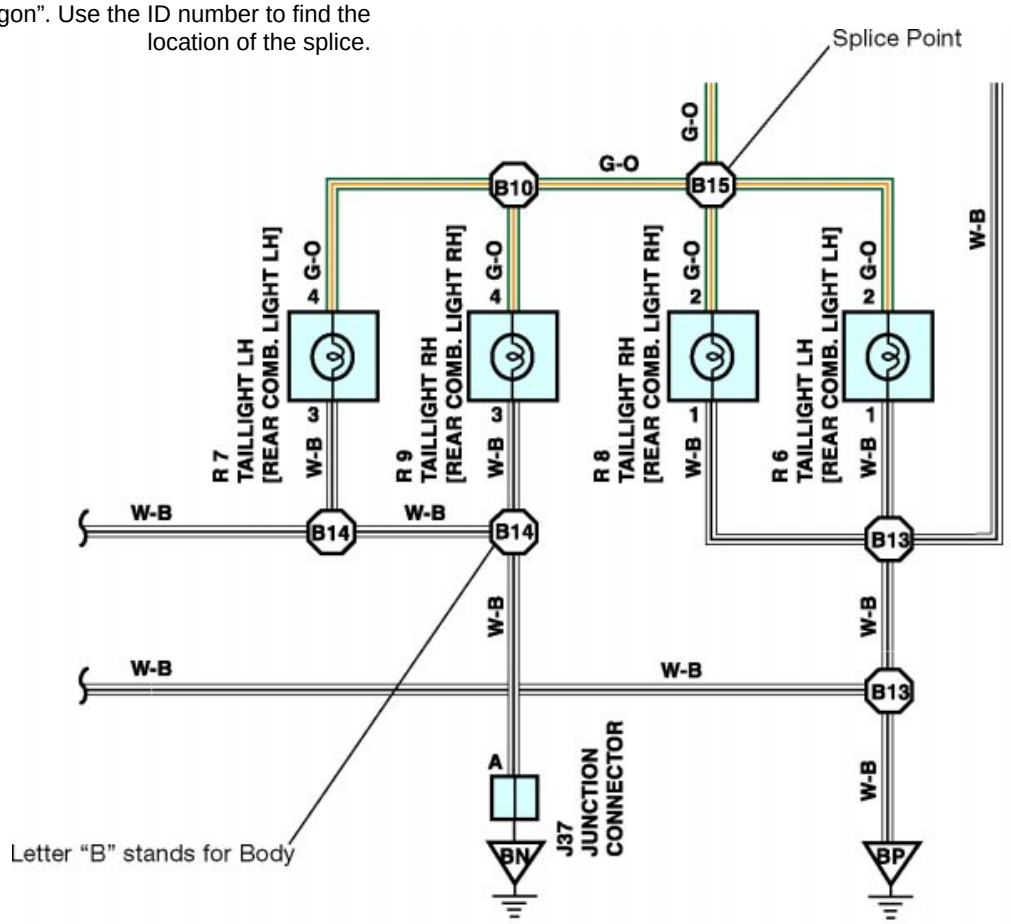

Fig. 2-15
L652f215

Locating a Splice Point

Look up the ID number on the Splice Location Table. Turn to the Section G page listed for a diagram.

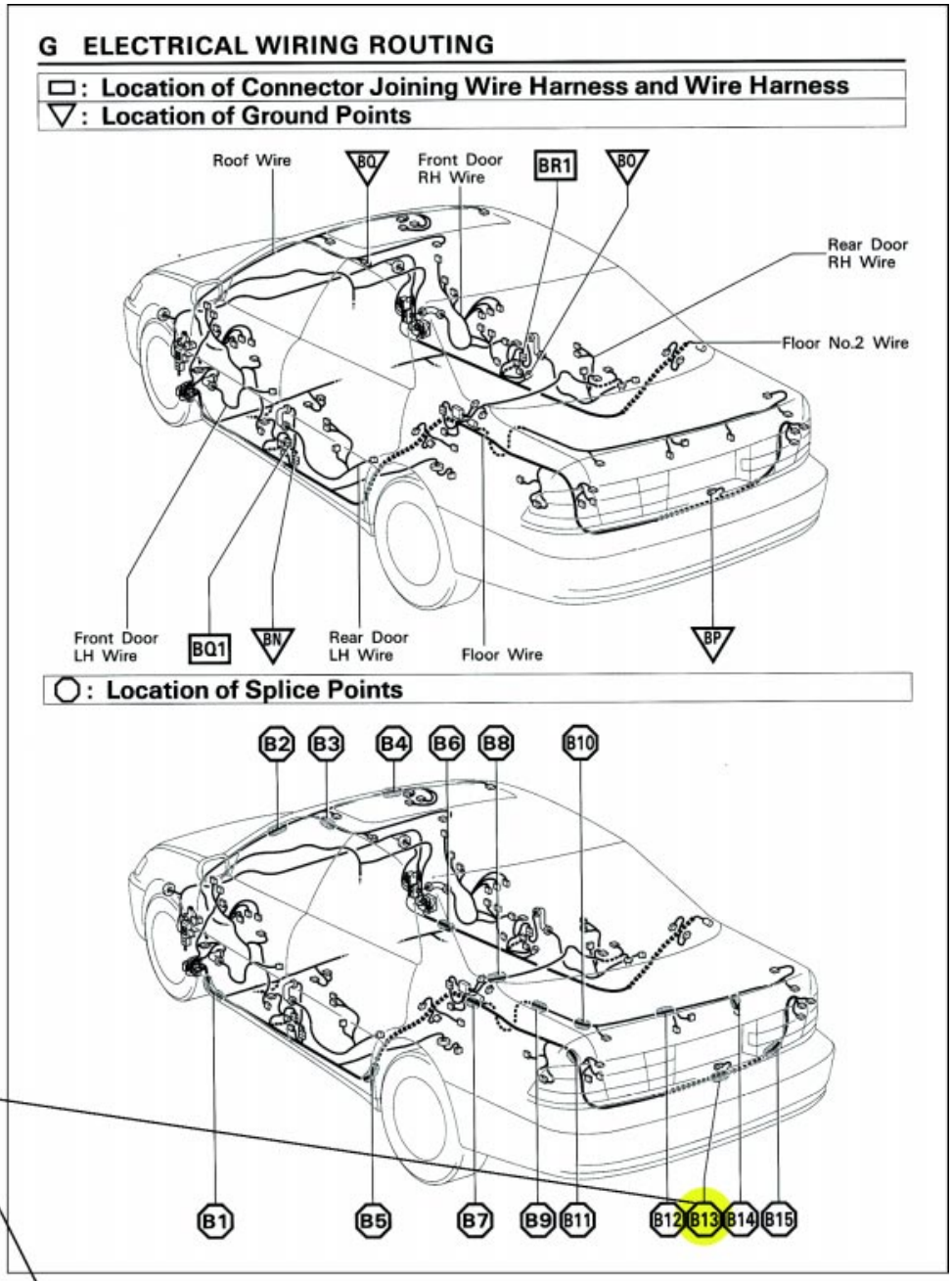

: SPLICE POINTS

Code	See Page	Wire Harness with Splice Points	Code	See Page	Wire Harness with Splice Points
E2	34	Cowl Wire	B12	40	Floor Wire
B5	40	Floor Wire	B13		
B10			B14		
B11			B15		

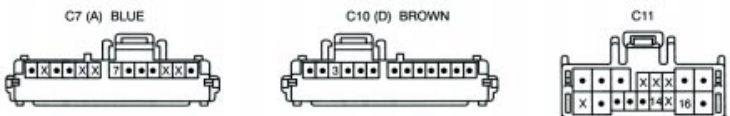

Fig. 2-16
L652f216

Power and Ground Distribution

If there is a problem which causes an entire circuit to be inoperative, the first two areas you need to check are the circuit's fuse and ground. The EWD can direct you to other circuits which **share** the fuse or ground point. By operating these circuits, you can check the condition of the fuse and ground point without making a *physical inspection*. This saves you time! The following sections outline how this is done.

Power Distribution

Go to the System Circuit Diagram for the problem circuit. On the diagram, the fuse is always located at the top of the page. To find additional circuits that share the same fuse, use the second chart in Section H Power Source (Current Flow). This multi-page chart lists every load on the vehicle, with the fuse that it's connected to.

Key Features

- **Power Source System Circuit Diagram**
  If you find that a fuse is not receiving +B, use the **Power Source** system circuit diagram in **Section I** (**Section H** starting with 2000 MY) for fusible link information. This color wiring diagram contains all of the features and location information found in each system circuit diagram. You can also use the **Power Source (Current Flow Chart)** in **Section H** (**Section K** in 1999 MY; and **Section J** starting with 2000 MY). The flow chart located at the beginning of **Section H** also traces the +B side of the fuse to its fusible link source. But, because it does not have all the features of the Power Source System Circuit Diagram (such as connector IDs, splice IDs, wire colors, and support sections), it is not as useful.

Section I Power Source (System Circuit)

If you can find another circuit which uses a particular fuse, and it operates correctly, you will have confirmed that the fuse is GOOD.

Note: Starting with 1999 MY, Section H Power Source (System Circuit).

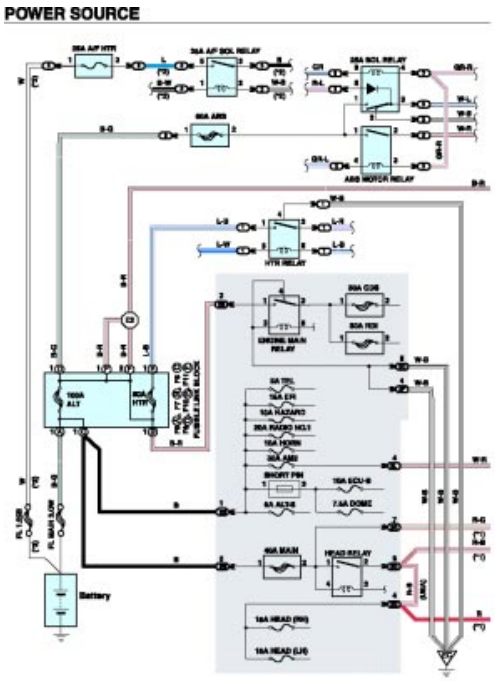

Fig. 2-17
L652f217

Section H Power Source (Current Flow)

Use this table to find other components that use the same fuse. If the other component works, the fuse is OK. If you find that the fuse is OK, but not receiving +B, use the Power Source System Circuit Diagram to trace the circuit back to the fusible links.

Note: Section K in 1999 MY; and Section J starting with 2000 MY. (See Figure 2-19)

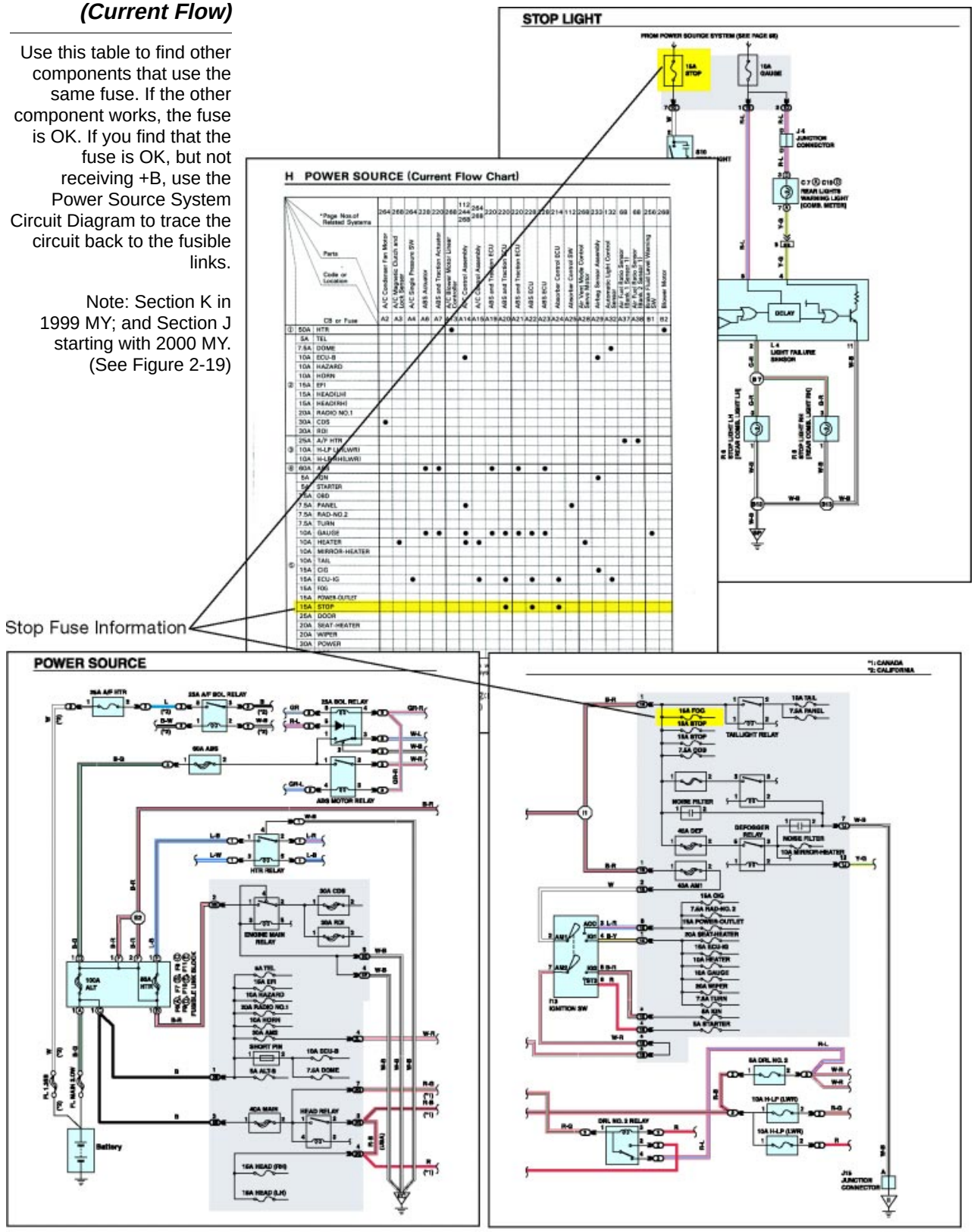

Fig. 2-18
L652f219

Power Source (Current Flow) Starting with 1999 MY

Starting with the 1999 MY, the Power Source (Current Flow Chart) change to a table format.

Note: Section K 1999 MY, Section J starting 2000 MY.

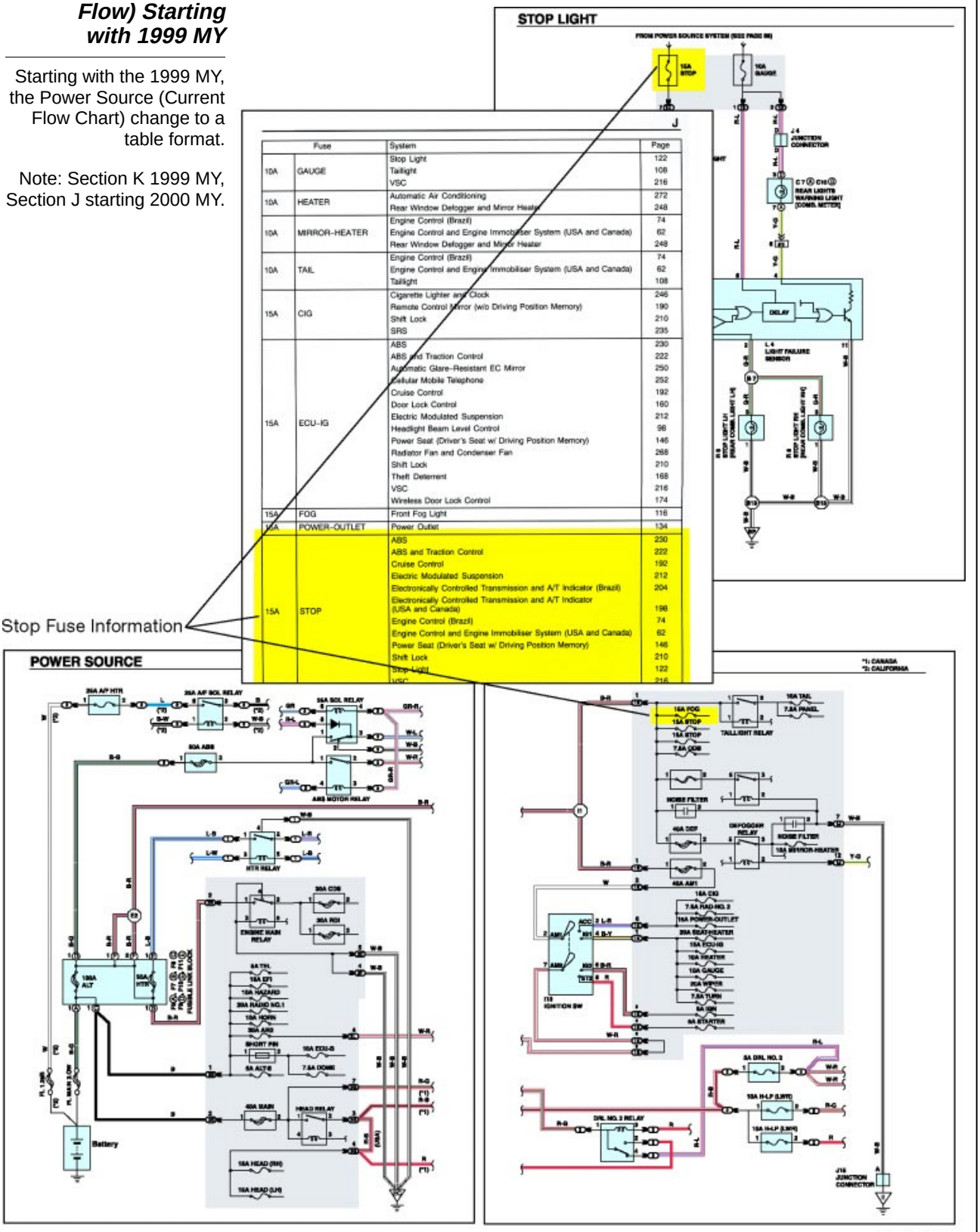

J

Fuse		System	Page
10A	GAUGE	Stop Light	122
		Taillight	108
		VSC	216
10A	HEATER	Automatic Air Conditioning	272
		Rear Window Defogger and Mirror Heater	248
10A	MIRROR-HEATER	Engine Control (Brazil)	74
		Engine Control and Engine Immobiliser System (USA and Canada)	62
		Rear Window Defogger and Mirror Heater	248
10A	TAIL	Engine Control (Brazil)	74
		Engine Control and Engine Immobiliser System (USA and Canada)	62
		Taillight	108
15A	CIG	Cigarette Lighter and Clock	246
		Remote Control Mirror (w/o Driving Position Memory)	190
		Shift Lock	210
		SRS	235
15A	ECU-IG	ABS	230
		ABS and Traction Control	222
		Automatic Glare-Resistant EC Mirror	250
		Cellular Mobile Telephone	252
		Cruise Control	192
		Door Lock Control	160
		Electric Modulated Suspension	212
		Headlight Beam Level Control	96
		Power Seat (Driver's Seat w/ Driving Position Memory)	146
		Radiator Fan and Condenser Fan	268
		Shift Lock	210
		Theft Deterrent	168
		VSC	216
		Wireless Door Lock Control	174
15A	FOG	Front Fog Light	116
10A	POWER-OUTLET	Power Outlet	134
15A	STOP	ABS	230
		ABS and Traction Control	222
		Cruise Control	192
		Electric Modulated Suspension	212
		Electronically Controlled Transmission and A/T Indicator (Brazil)	204
		Electronically Controlled Transmission and A/T Indicator (USA and Canada)	198
		Engine Control (Brazil)	74
		Engine Control and Engine Immobiliser System (USA and Canada)	62
		Power Seat (Driver's Seat w/ Driving Position Memory)	146
		Shift Lock	210
		Stop Light	122
		VSC	216

Fig. 2-19
L652f219

Ground Distribution

In the electrical system, a load's ground point is often shared with other circuits. If another circuit which shares the ground point with your inoperative circuit works properly, then you know that the grounding point is OK. This does not eliminate the possibility of a problem on the ground side of the circuit, or a poor connection problem between ground point terminals "stacked" onto a single ground point.

Key Features

- **Ground Point ID**
  To check the grounding point, look for the triangle shaped ground symbol on the bottom of the page. All ground points have a two-letter ID number: the first letter represents *E*ngine, *I*nstrument panel, or *B*ody, the same as with the splice points and harness-to-harness connectors.
- **Finding Circuits Which Share the Ground Point**
  Using the Ground Point ID, turn to Section J, Ground Point, in the EWD. In this section, each ground point is listed with the names of all components and splices that are connected to it.
- **Locating the Ground Point on the Vehicle**
  If you determine that there is a problem with the ground, use the **Ground Point Location** table that follows the system circuit diagram, for a description of the ground location, and the page number to turn to for a diagram of where the ground point is located.

Ground Points

Look at the "triangle" for the ground ID number. For location of the ground on the vehicle, use the ground location table in the support section.

Find the ground point by using the Ground ID number

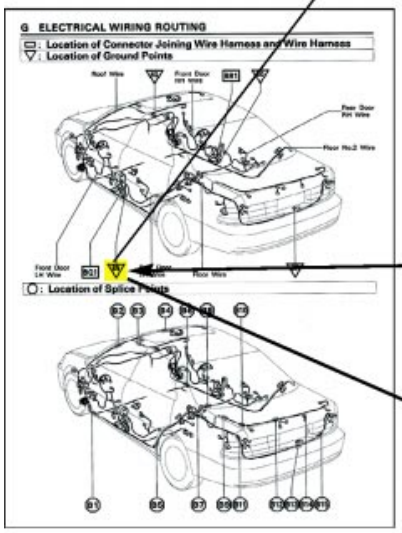

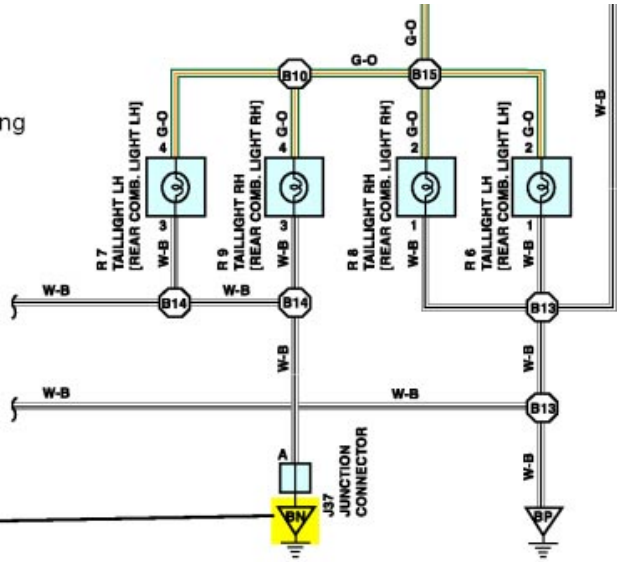

: GROUND POINTS

Code	See Page	Ground Points Location
EA	34	Right Radiator Side Support
EC	34	Left Radiator Side Support
II	36	Instrument Panel Brace LH
BN	40	Under the Left Center Pillar
BP	40	Back Panel Center

Fig. 2-20
L652f220

Section J Ground Points

Look at Section J, Ground Point, for circuits that share the ground, or redundant ground paths.

Note: Section I starting with 1999 MY.

Follow the Ground ID number to Section J and to Section G

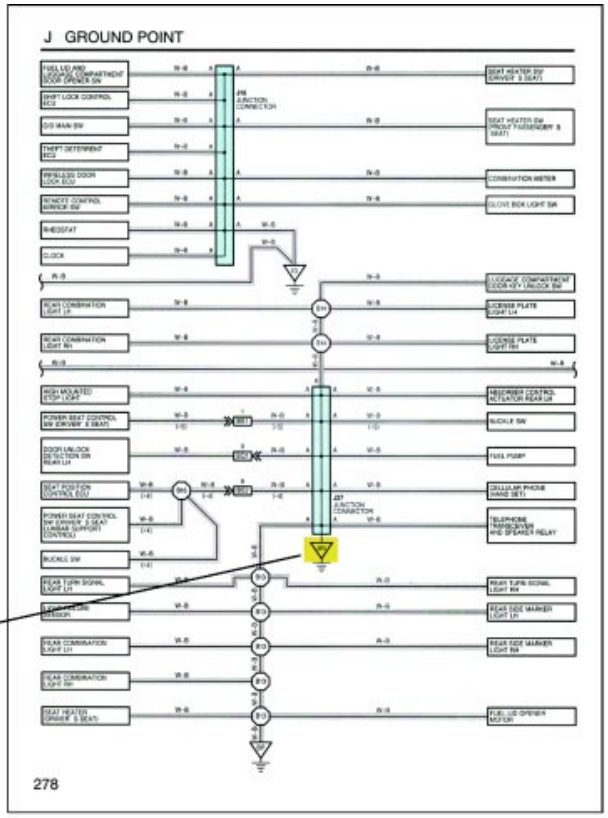

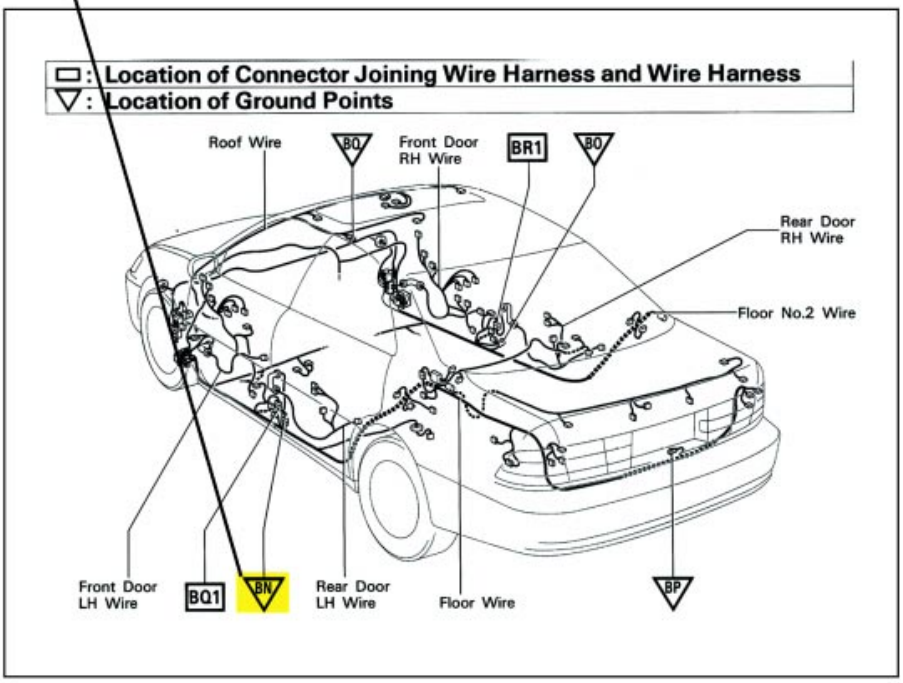

Fig. 2-21
L652I221

Additional Support Sections

In addition to the wiring diagram and location tables, the EWD provides other resources that you can use when diagnosing a problem.

System Outline

The first step in any diagnostic process is to **verify the problem**. To do this, you'll need to know exactly how the system is supposed to work. The **System Outline** is one of the best places for this information. This section, which follows immediately after the wiring diagram, describes the operation of the circuit, and maps out the path of current flow "step-by-step" for each mode of operation. This is especially useful in circuits which use an ECU to "logically" control a circuit based upon various sensor inputs.

NOTE

The System Outline section is found only with complicated or ECU controlled circuits. For many system circuit diagrams, no help is given; you must be able to apply basic circuit theory and your own knowledge about how the circuit works to make a successful diagnosis using the EWD.

System Outline

Use the System Outline to find not only the "paths of current flow" in the circuit, but most importantly, the SEQUENCE of current flow in the system or circuit, and the CONDITIONS under which the ECU will turn a circuit OFF or ON.

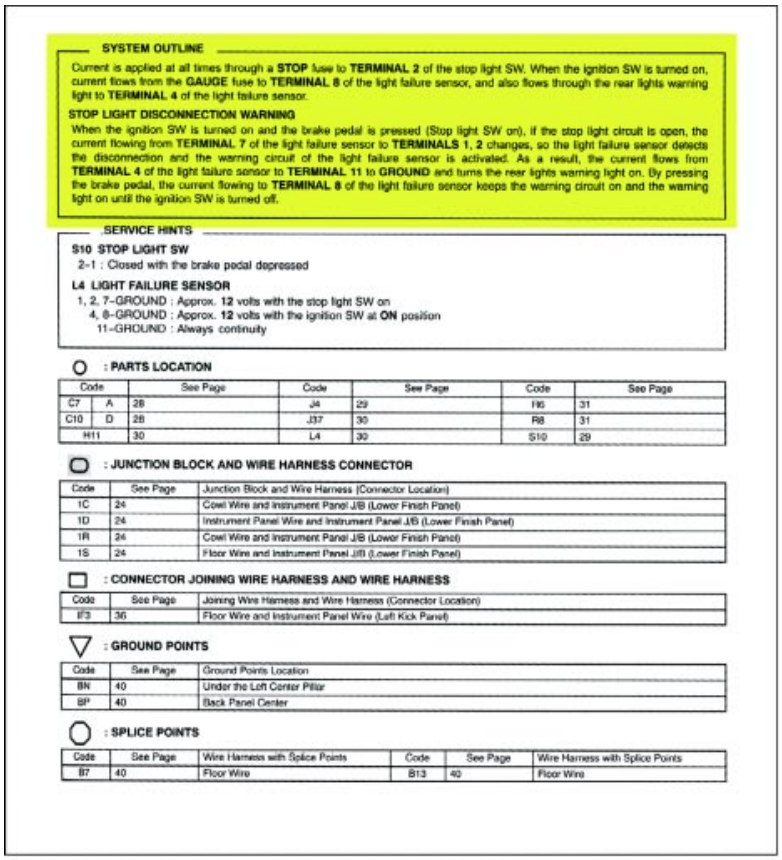

SYSTEM OUTLINE

Current is applied at all times through a **STOP** fuse to **TERMINAL 2** of the stop light SW. When the ignition SW is turned on, current flows from the **GAUGE** fuse to **TERMINAL 8** of the light failure sensor, and also flows through the rear lights warning light to **TERMINAL 4** of the light failure sensor.

STOP LIGHT DISCONNECTION WARNING

When the ignition SW is turned on and the brake pedal is pressed (Stop light SW on), if the stop light circuit is open, the current flowing from **TERMINAL 7** of the light failure sensor to **TERMINALS 1, 2** changes, so the light failure sensor detects the disconnection and the warning circuit of the light failure sensor is activated. As a result, the current flows from **TERMINAL 4** of the light failure sensor to **TERMINAL 11** to **GROUND** and turns the rear lights warning light on. By pressing the brake pedal, the current flowing to **TERMINAL 8** of the light failure sensor keeps the warning circuit on and the warning light on until the ignition SW is turned off.

SERVICE HINTS

S10 STOP LIGHT SW
2–1 : Closed with the brake pedal depressed

L4 LIGHT FAILURE SENSOR
1, 2, 7–GROUND : Approx. **12** volts with the stop light SW on
4, 8–GROUND : Approx. **12** volts with the ignition SW at **ON** position
11–GROUND : Always continuity

: PARTS LOCATION

Code		See Page	Code	See Page	Code	See Page
C7	A	28	J4	29	R6	31
C10	D	28	J37	30	R8	31
H11		30	L4	30	S10	29

: JUNCTION BLOCK AND WIRE HARNESS CONNECTOR

Code	See Page	Junction Block and Wire Harness (Connector Location)
1C	24	Cowl Wire and Instrument Panel J/B (Lower Finish Panel)
1D	24	Instrument Panel Wire and Instrument Panel J/B (Lower Finish Panel)
1R	24	Cowl Wire and Instrument Panel J/B (Lower Finish Panel)
1S	24	Floor Wire and Instrument Panel J/B (Lower Finish Panel)

: CONNECTOR JOINING WIRE HARNESS AND WIRE HARNESS

Code	See Page	Joining Wire Harness and Wire Harness (Connector Location)
IF3	36	Floor Wire and Instrument Panel Wire (Left Kick Panel)

: GROUND POINTS

Code	See Page	Ground Points Location
BN	40	Under the Left Center Pillar
BP	40	Back Panel Center

: SPLICE POINTS

Code	See Page	Wire Harness with Splice Points	Code	See Page	Wire Harness with Splice Points
B7	40	Floor Wire	B13	40	Floor Wire

Fig. 2-22
L652f222

Service Hints

This section provides pin voltages and/or resistance values (some of these values are found only in the EWD and are not in the repair manual). However, **Service Hints are not supplied with every wiring diagram.** When they are given, they will cover only some of the pin voltages and resistance values in the circuit.

Overall, the EWD relies on your skills and electrical knowledge to determine the amount of voltage you should measure at a particular pin.

Service Hints

The Service Hints section can have some helpful information that is not found in the Repair Manual. The information in the Engine Control Section can be of great help when diagnosing a TCCS related problem.

ENGINE CONTROL AND ENGINE IMMOBILISER SYSTEM

SERVICE HINTS

CIR OPN RELAY [ENGINE ROOM R/B]
5–3 : Closed with the starter running
EFI RELAY [ENGINE ROOM J/B]
5–3 : Closed with the ignition SW at **ON** or **ST** position
E4 ENGINE COOLANT TEMP. SENSOR
1–2 : **10.0–20.0** kΩ (**–20**˚C, **–4**˚F)
4.0–7.0 kΩ (**0**˚C, **32**˚F)
2.0–3.0 kΩ (**20**˚C, **68**˚F)
0.9–1.3 kΩ (**40**˚C, **104**˚F)
0.4–0.7 kΩ (**60**˚C, **140**˚F)
0.2–0.4 kΩ (**80**˚C, **176**˚F)
E7 (A), E8 (B), E9 (C), E10 (D), E11 (E) ENGINE CONTROL MODULE
Voltage at engine control module wiring connector
BATT–E1 : Always **9.0–14.0** volts
+B–E1 : **9.0–14.0** volts (Ignition SW at **ON** position)
VC–E2 : Always **4.5–5.5** volts (Ignition SW at **ON** position)
VTA1–E2 : **0.3–0.8** volts (Ignition SW on and throttle valve fully closed)
3.2–4.9 volts (Ignition SW on and throttle valve fully open)
VG–E2G : **1.1–1.5** volts (Engine idling and A/C SW off)
THA–E2 : **0.5–3.4** volts (Engine idling and intake air temp. **20**˚C, **68**˚F)
THW–E2 : **0.2–1.0** volts (Engine idling and coolant temp. **80**˚C, **176**˚F)
IGF–E1 : **4.5–5.5** volts (Ignition SW at **ON** position)
Pulse generation (Engine idling)
G22+ –NE– : Pulse generation (Engine idling)
NE+ –NE– : Pulse generation (Engine idling)
SIL–E1 : Pulse generation (During transmission)
TACH–E1 : Pulse generation (Engine idling)
STA–E1 : **6.0** volts or more (Engine cranking)
THG–E2 : **4.5–5.5** volts (Ignition SW at **ON** position)
EGR–E01 : **9.0–14.0** volts (Ignition SW at **ON** position)
FC–E1 : **9.0–14.0** volts (Ignition SW at **ON** position)
0–3.0 volts (Engine idling)
SPD–E1 : Pulse generation (Ignition SW on and rotate driving wheel slowly)
W–E1 : Below **3.0** volts (Ignition SW at **ON** position)
A/C–E1 : Below **2.0** volts (Engine idling and A/C SW on)
9.0–14.0 volts (A/C SW off)
ACT–E1 : **9.0–14.0** volts (Engine idling and A/C SW on)
Below **2.0** volts (A/C SW off)
ACIS–E01 : **9.0–14.0** volts (Ignition SW at **ON** position)
NSW–E1 : **9.0–14.0** volts (Ignition SW on and other shift position in **P** or **N** position)
0–3.0 volts (Ignition SW on and shift position in **P** or **N** position)
EVP–E01 : **9.0–14.0** volts (Ignition SW at **ON** position)
TC–E1 : **9.0–14.0** volts (Ignition SW at **ON** position)
STP–E1 : **7.5–14.0** volts (Ignition SW on and brake pedal depressed)
0–1.5 volts (Ignition SW on and brake pedal depressed)
CF–E1 : **9.0–14.0** volts (Cooling fan is operating on high speed)
0–2.0 volts (Cooling fan is operating on low speed or off)
TPC–E1 : **9.0–14.0** volts (Ignition SW on and disconnect the vacuum hose from the vapor pressure sensor)
PTNK–E1 : **3.0–3.6** volts (Ignition SW at **ON** position)
1.3–2.1 volts (Ignition SW on and apply vacuum **2.0** kpa)
OXS–E1 : Pulse generation (Maintain engine speed at **2500** rpm for two minutes after warming up)
RSC, RSO–E1 : **9.0–14.0** volts (Ignition SW at **ON** position)
KNKL, KNKR–E1 : Pulse generation (Engine idling)
HTS, HTL, HTR–E03 : **9.0–14.0** volts (Ignition SW at **ON** position)
0–3.0 volts (Engine idling)
IGT1, IGT2, IGT3–E1 : Pulse generation (Engine idling)
#10, #20, #30, #40, #50, #60–E01 : **9.0–14.0** volts (ignition SW at **ON** position)
Pulse generation (Engine idling)

Fig. 2-23
L652f223

Overall Wiring Diagrams

In the last section of the EWD, the vehicle wiring diagram is printed in the older map-style format. If you were “brought up” with this type of wiring diagram, you may prefer to use it because “you can see everything at once.” But with all of the added support information that is provided in the **Section I** (**Section H** starting with 1999 MY) wiring diagrams, there is no real advantage in using the overall wiring diagrams, except for the “familiarity” factor. Anything that can be done with the map-style schematic can be done faster using the System Circuit Diagrams and support sections in the EWD.

Section K Overall Wiring Diagram

The overall wiring diagram is provided in Section K of the EWD. While it’s faster to use the Section I wiring diagrams, the overall wiring diagram can act as a backup to catch any typographical errors found in the System Circuit Diagram

Note: Section J for 1999 MY, and Section M starting with 2000 MY.

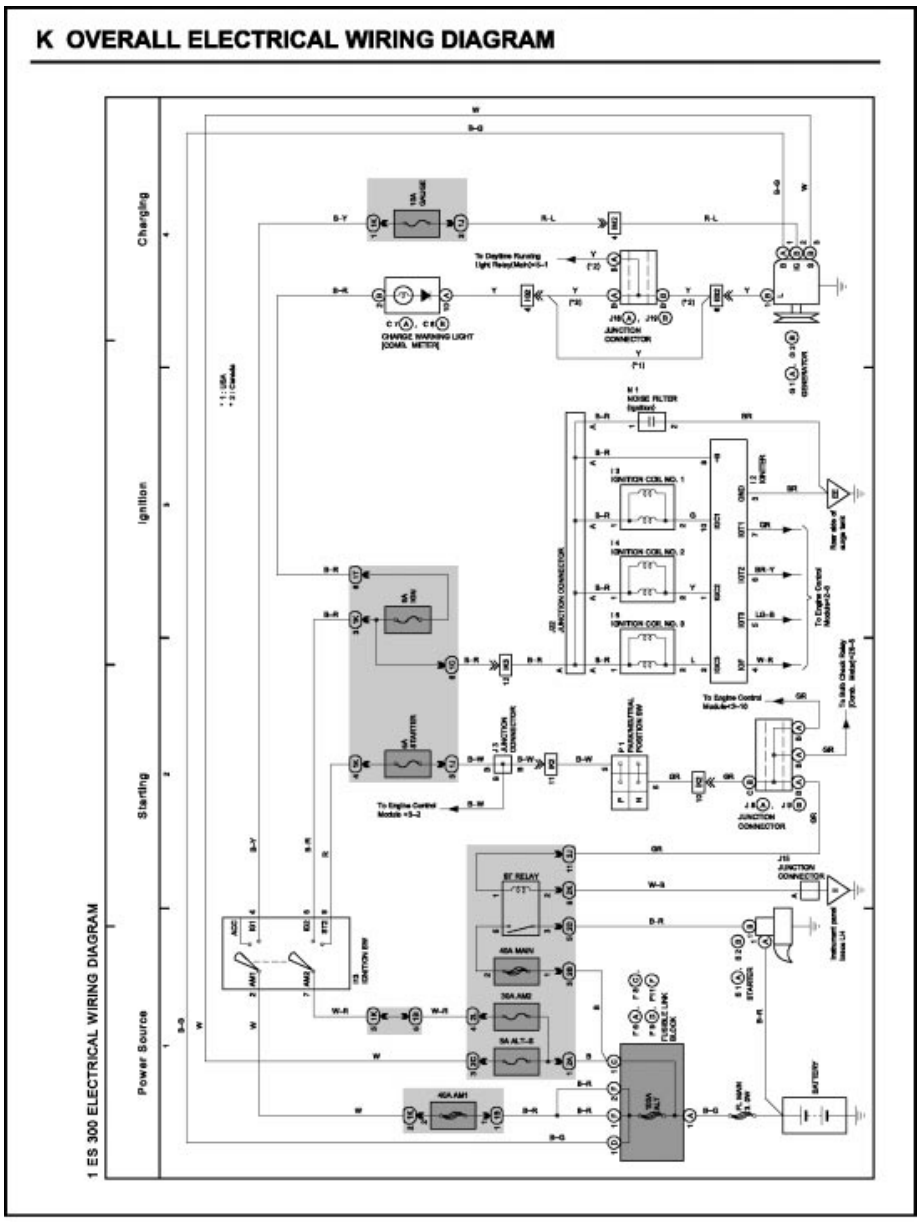

Fig. 2-24
L652f224

Because there is so much information in the EWD manual, it sometimes can be confusing to use. Being able to quickly find the information you want requires *practice*. During the rest of this course, you'll be performing worksheets and diagnosing actual on-car problems to make you more familiar with all of the EWD features.

To illustrate how the EWD is used when you are diagnosing an electrical problem, we will use the Lexus Six-Step Troubleshooting procedure for the following problem on a 1998 ES 300.

The six-step troubleshooting procedure will be covered in detail later in this course.

Section C Troubleshooting

C TROUBLESHOOTING

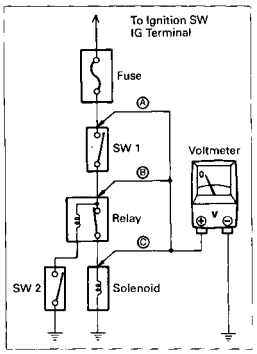

VOLTAGE CHECK

(a) Establish conditions in which voltage is present at the check point.

Example:
Ⓐ – Ignition SW on
Ⓑ – Ignition SW and SW 1 on
Ⓒ – Ignition SW, SW 1 and Relay on (SW 2 off)

(b) Using a voltmeter, connect the negative lead to a good ground point or negative battery terminal, and the positive lead to the connector or component terminal. This check can be done with a test light instead of a voltmeter.

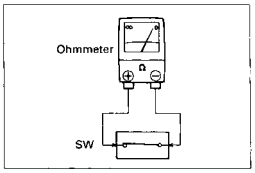

CONTINUITY AND RESISTANCE CHECK

(a) Disconnect the battery terminal or wire so there is no voltage between the check points.

(b) Contact the two leads of an ohmmeter to each of the check points.

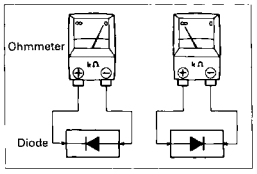

If the circuit has diodes, reverse the two leads and check again.
When contacting the negative lead to the diode positive side and the positive lead to the negative side, there should be continuity.
When contacting the two leads in reverse, there should be no continuity.

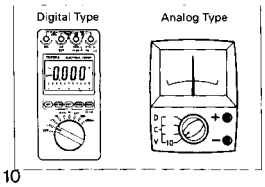

(c) Use a volt/ohmmeter with high impedance (10 kΩ/V minimum) for troubleshooting of the electrical circuit.

10

Fig. 2-25
L652f225

Section K Connector List

Section K (starting with 2000 MY) provides a connector list of all connectors applicable to the vehicle. Prior to 2000, connectors were located directly following each circuit to which they are applied.

Section K Connector List

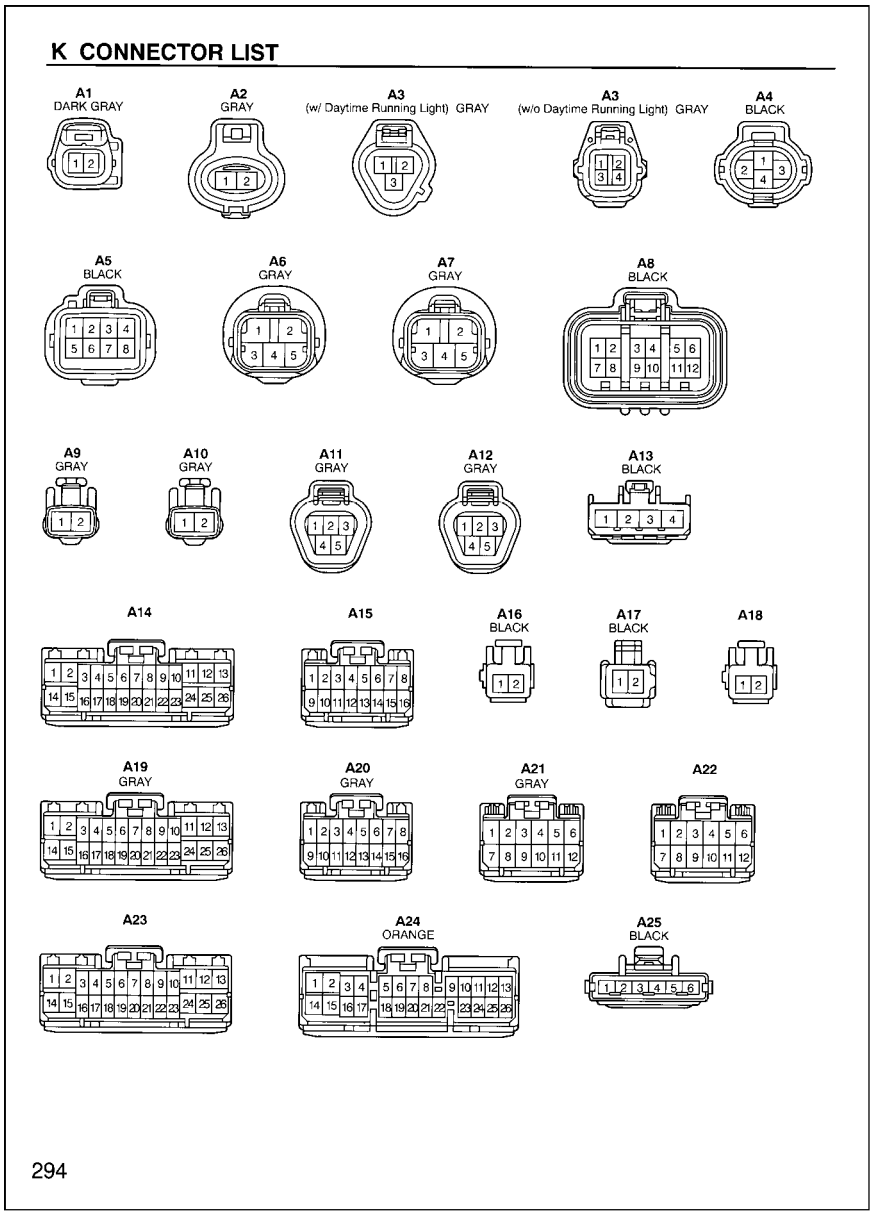

Fig. 2-26
L652f226

Section L **Section L** (starting with 1999 MY) contains part numbers and connectors. Each connector has a code designation, a part name, and a part number. However, not all of the connectors or terminals with wire are in supply. Consult the "Parts Catalog News" to determine whether or not the connector you need is available.

Section L
Part Number of Connectors

L PART NUMBER OF CONNECTORS

Code	Part Name	Part Number
P24	Power Seat Motor (Front Passenger's Seat Reclining Control)	90980-10825
P25	Power Seat Motor (Front Passenger's Seat Slide Control)	
P26	Power Seat Position Sensor (Driver's Seat Front Vertical Control)	90980-10808
P27	Power Seat Position Sensor (Driver's Seat Rear Vertical Control)	
P28	Power Seat Position Sensor (Driver's Seat Reclining Control)	
P29	Power Seat Position Sensor (Driver's Seat Slide Control)	
P30	Pretensioner LH	90980-11862
P31	Pretensioner RH	
P32	Power Window Motor and ECU Front LH	90980-11535
P33	Power Window Motor and ECU Front RH	
R 1	Radiator Fan Motor	90980-10928
R 2	Radio and Player	90980-11264
R 3	Radio and Player	90980-10803
R 4	Remote Control Mirror SW	90980-11657

Code	Part Name	Part Number
S14	Seat Position Control ECU	90980-11527
S15	Seat Position Control ECU	90980-11502
S16	Side Airbag Sensor LH	90980-11857
S17	Side Airbag Sensor RH	
S18	Side Airbag Squib LH	90980-11864
S19	Side Airbag Squib RH	
T 1	Theft Deterrent Horn	90980-11235
T 2	Throttle Position Sensor	90980-11261
T 3	Theft Deterrent ECU	90980-11424
T 4	Theft Deterrent ECU	90980-11392
T 5	TRAC Off SW	90980-11013
T 6	Turn Signal Flasher Relay	82751-50010
T 7	Telephone Transceiver and Speaker Relay	90980-10803
T 8	Telephone Transceiver and Speaker Relay	90980-10802
T 9	Transponder Key Amplifier	90980-10789
T10	Turbine Speed Sensor	90980-11156
T11	Transponder Key Computer	90980-11556
U 1	Unlock Warning SW (Ignition Key)	90980-10860

S16 YELLOW

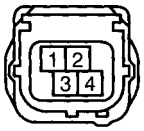

S17 YELLOW

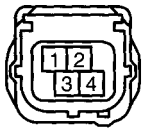

S18 YELLOW

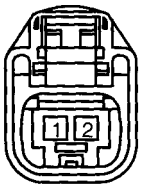

Fig. 2-27
L652f227

WORKSHEET 2-1
Switches & Relays

Vehicle	Year/Prod. Date	Engine	Transmission

Worksheet Objectives

At the conclusion of this worksheet, you will be able to:

- Differentiate between different type of Switches and Relays used in Lexus vehicles
- Determine if a Switch is shown in a normally opened or normally closed position
- Describe how Continuity is established between pins within a Switch/Relay

Tools and Equipment

- 1998 ES 300 EWD

Headlight Switch

For questions 17, refer to the picture below & the 1998 ES 300 EWD

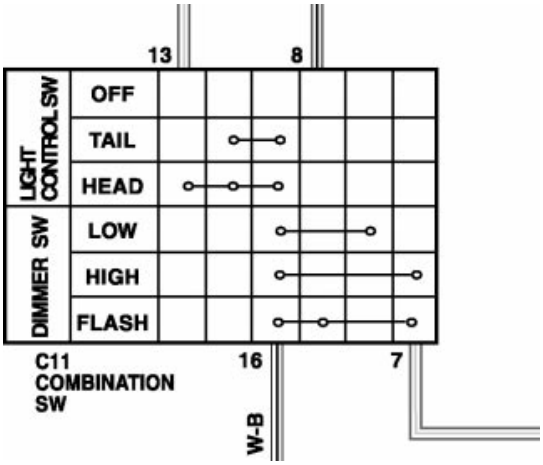

1. Combination switch C11 is called a combination switch because multiple functions are combined in one unit. How many functions are shown in the pictures below?

   _____

2. What sub circuits do these functions control?

   _____

3. When the Headlight Switch is in the “OFF” position which pins are connected?

   _____

   _____

4. When the switch is in the tail position which pins are connected?

_____

5. When the switch is in the headlights on, low beam position which pins are connected?

_____

6. When the switch is in the headlights on, high beam position which pins are connected?

_____

7. When the switch is in the “Flash” position which pins are connected?

_____

Refer to the picture below (P16 POWER SEAT CONTROL SW) to answer questions 8 & 9:

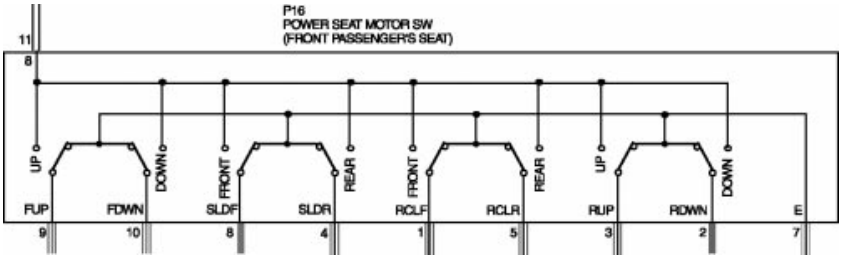

8. Which pin provides power when the switch is in the “Slide Forward” position?

_____

9. Which pin provides power when the switch is in the “Slide Back” position?

_____

Refer to the picture below (D15 DOOR LOCK CONTROL SW) below to answer questions 10 & 11:

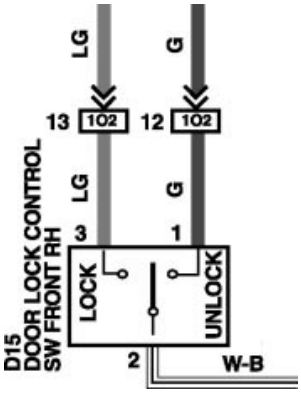

10. When the switch is in the “lock” position which pins are connected?

_____

11. When the switch is in the “unlock” position which pins are connected?

_____

Refer to the picture below (I13 IGNITION SW) to answer the questions 12-14:

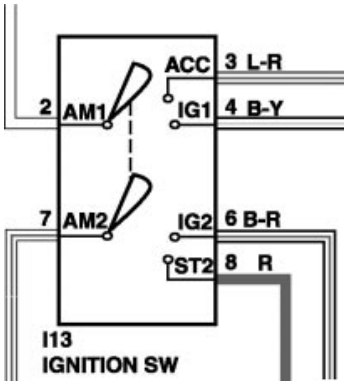

12. When the switch is in the ACC position which pins are connected?

_____

13. When the switch is in the IG position or “ON” which pins are connected?

_____

14. When the switch is in the “ST” position which pins are connected?

_____

Refer to the diagram below to answer questions 15 & 16:

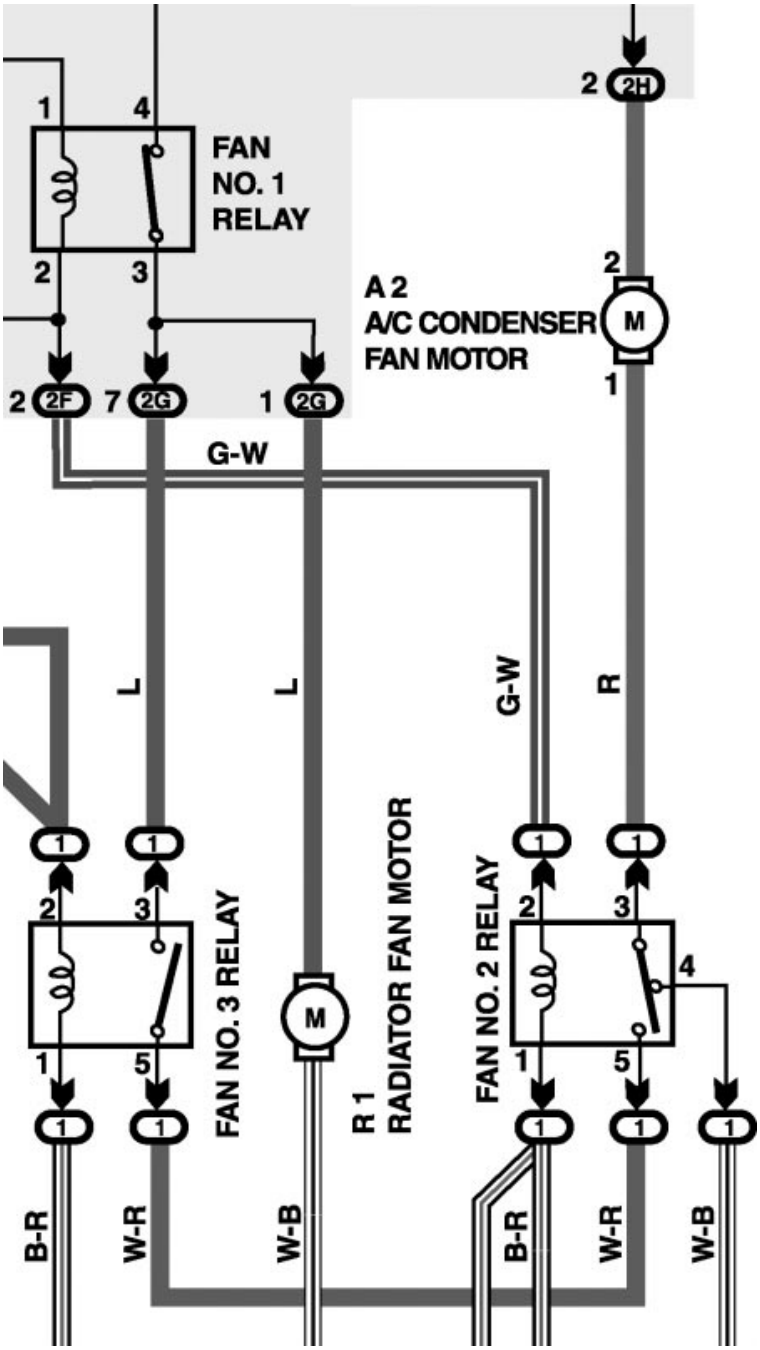

15. Is FAN NO. 3 RELAY normally open or normally closed?

_____

16. When current flows from pin 1 to pin 2 of FAN NO. 3 RELAY are the contacts open or closed?

_____

17. When current flows from pin 1 to pin 2 of FAN NO. 3 RELAY will there be a voltage drop? Why?

    _____

18. When the contacts are closed and current flows from pin 3 to pin 5 of FAN NO. 3 RELAY will there be a voltage drop? Why?

    _____

19. When no current flows from pin 1 to pin 2 of FAN NO. 1 are the contacts open or closed?

    _____

20. When current flows from pin 1 to pin 2 of FAN NO. 1 RELAY are the contacts open or closed?

    _____

21. When no current flows from pin 1 to pin 2 of FAN NO. 2 RELAY, which pins are connected?

    _____

22. When current flows from pin 1 to pin 2 of FAN NO. 2 RELAY, which pins are connected?

    _____

Notes

Switches & Relays

Name: _____ Date: _____

Review this sheet as you are doing the *Switches & Relays* worksheet. Check each category after viewing the instructor's presentation and completing the worksheet. Ask the instructor if you have questions regarding the topics provided below. Additional space is provided under topic for you to list any other concerns that you would like your instructor to address. The comments section is provided for your personal comments, information, questions, etc.

I have questions

I know I can

Topic			Comment
Normally Opened/Normally Closed Switches			
How Continuity is established between pins in a Switch with a bus bar			
How Continuity is established between Multipole Switches			
How Continuity is established in a Gang-Type Switch			

Notes

WORKSHEET 2-2
Tracing Current Flow - Remote Control Mirror Circuit

Vehicle	Year/Prod. Date	Engine	Transmission

Worksheet Objectives

At the conclusion of this worksheet, you will demonstrate your skill to trace the Current Flow path and identify the appropriate Switch positions in an operating circuit using a Circuit Diagram.

Tools and Equipment

- Green and Pink Highlighters

Tracing Current Flow

On the following System Circuit Diagrams:

1. Using the conditions listed at the top of the page, determine the position of each switch contact and fill in the chart at the top of each page. Draw these switch positions on the Wiring Diagram.

2. Using a highlighter, trace the current flow through the circuit. Use arrows when appropriate to show the direction of current flow.

Remote Control Mirror Switch

Step 2.
Draw in switch contacts in the positions necessary to operate circuit. Notice that switches are set in neutral positions on the EWD and that your workbook switches will need to be drawn in the trace

Step 3.
If necessary, trace current to determine relay operation and contact position. Draw relay contacts in operating positions.

Step 1.
Locate Power Supplies, Loads and Grounds

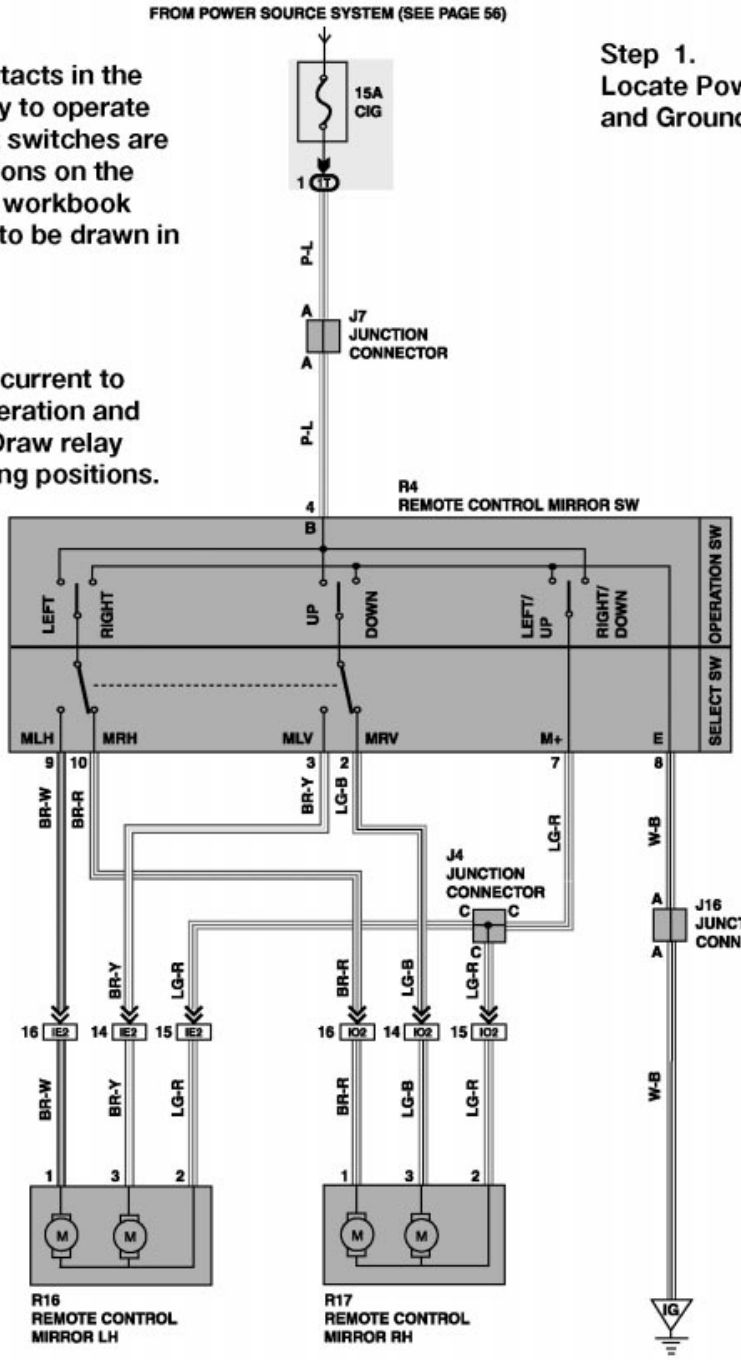

Step 4.
Begin by tracing from the Power Source to the load with a pink highlighter

Step 5.
Trace from the load to ground with a green highlighter

Circuit #1
Direction: Up
Mirror: Right

Switch Contact	Position
Left/Right Switch	
Up/Down Switch	
Left/Up Right/Down Switch	
MLH/MLV MRH/MRV Switch	

The boxes above are done for you. Draw the switches as they should be set then trace the circuit

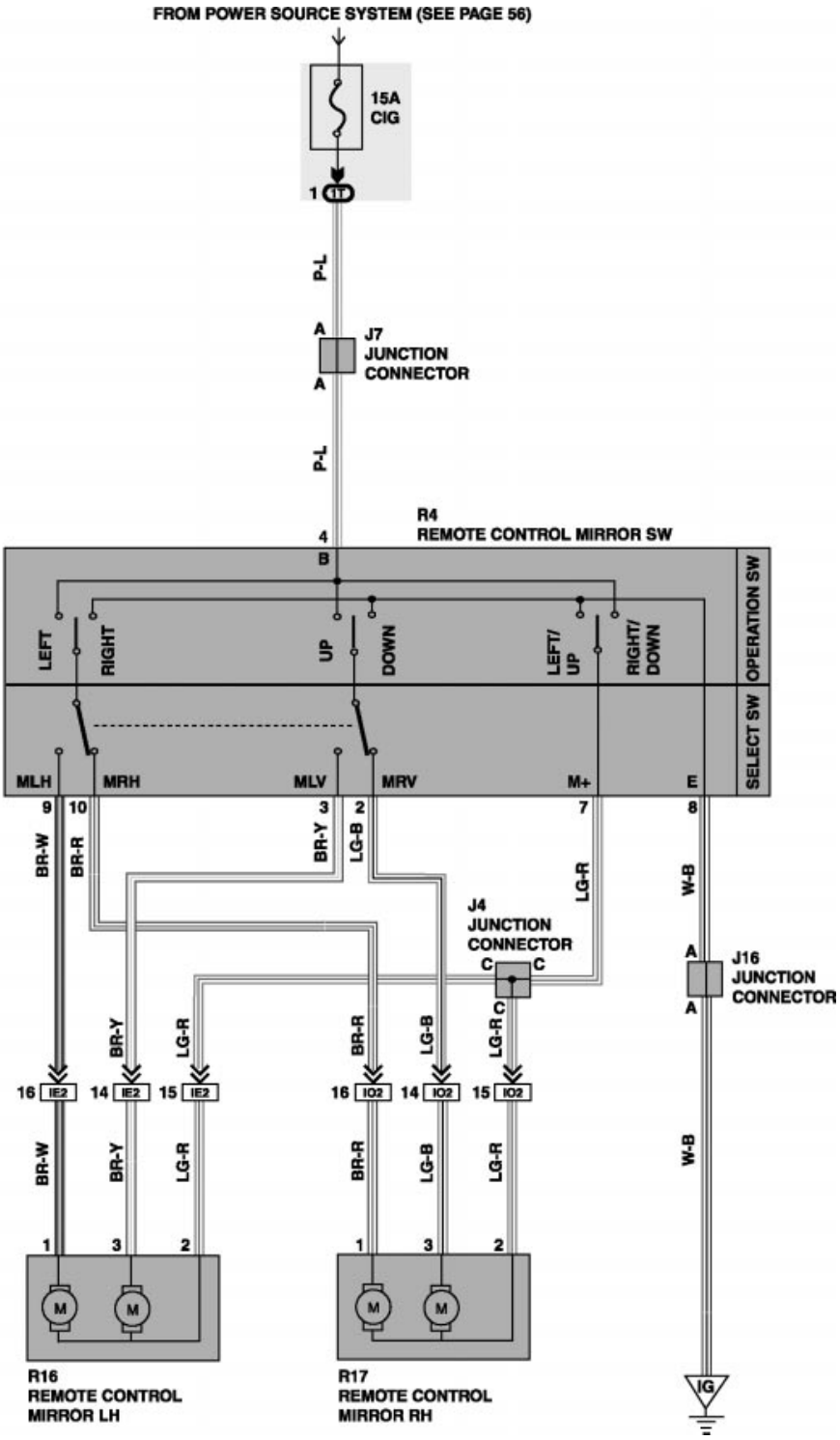

Circuit #2
Direction: Down
Mirror: Right

Switch Contact	Position
Left/Right Switch	
Up/Down Switch	
Left/Up Right/Down Switch	
MLH/MLV MRH/MRV Switch	

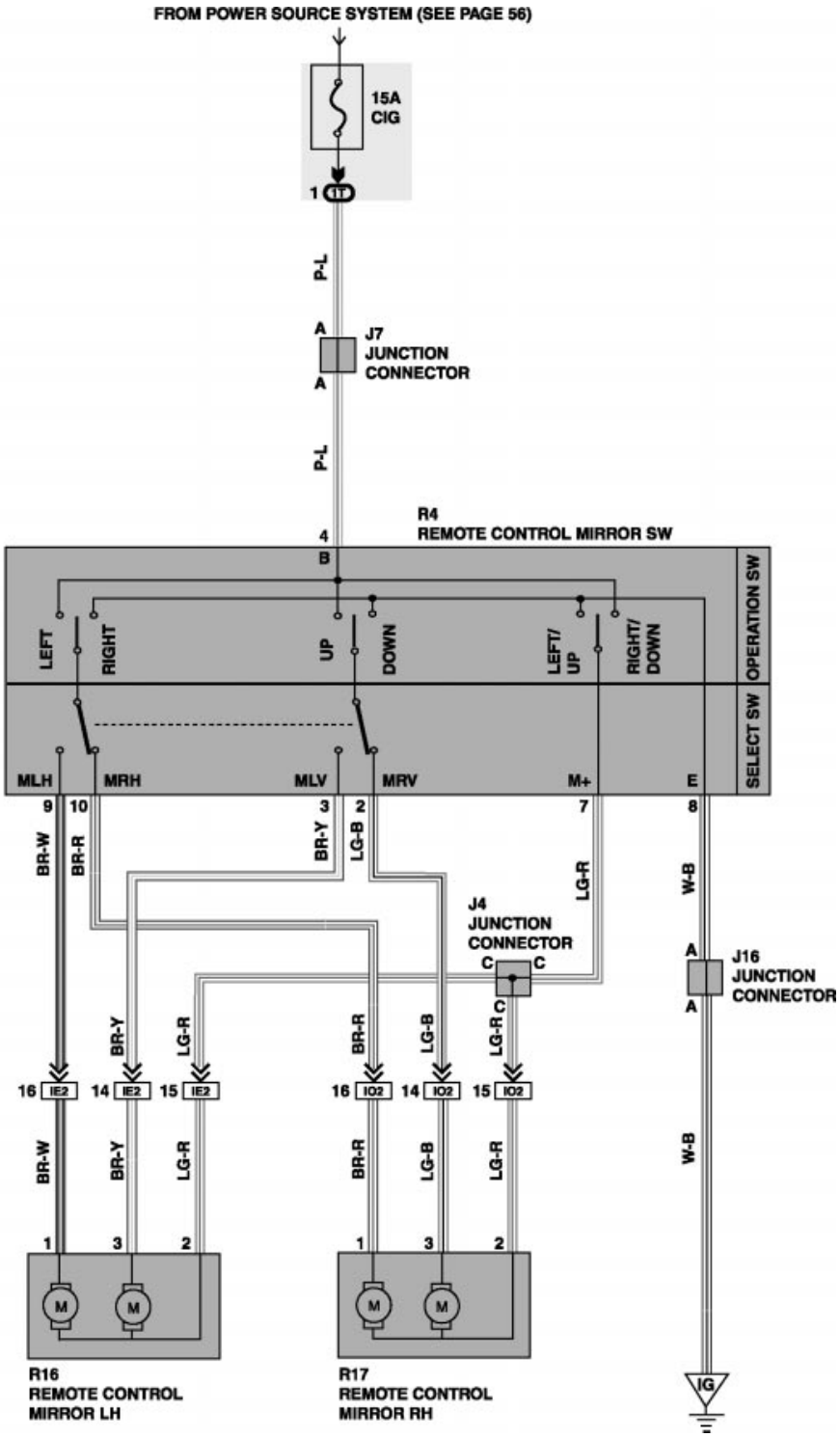

Circuit #3
Direction: Left
Mirror: Left

Switch Contact	Position
Left/Right Switch	
Up/Down Switch	
Left/Up Right/Down Switch	
MLH/MLV MRH/MRV Switch	

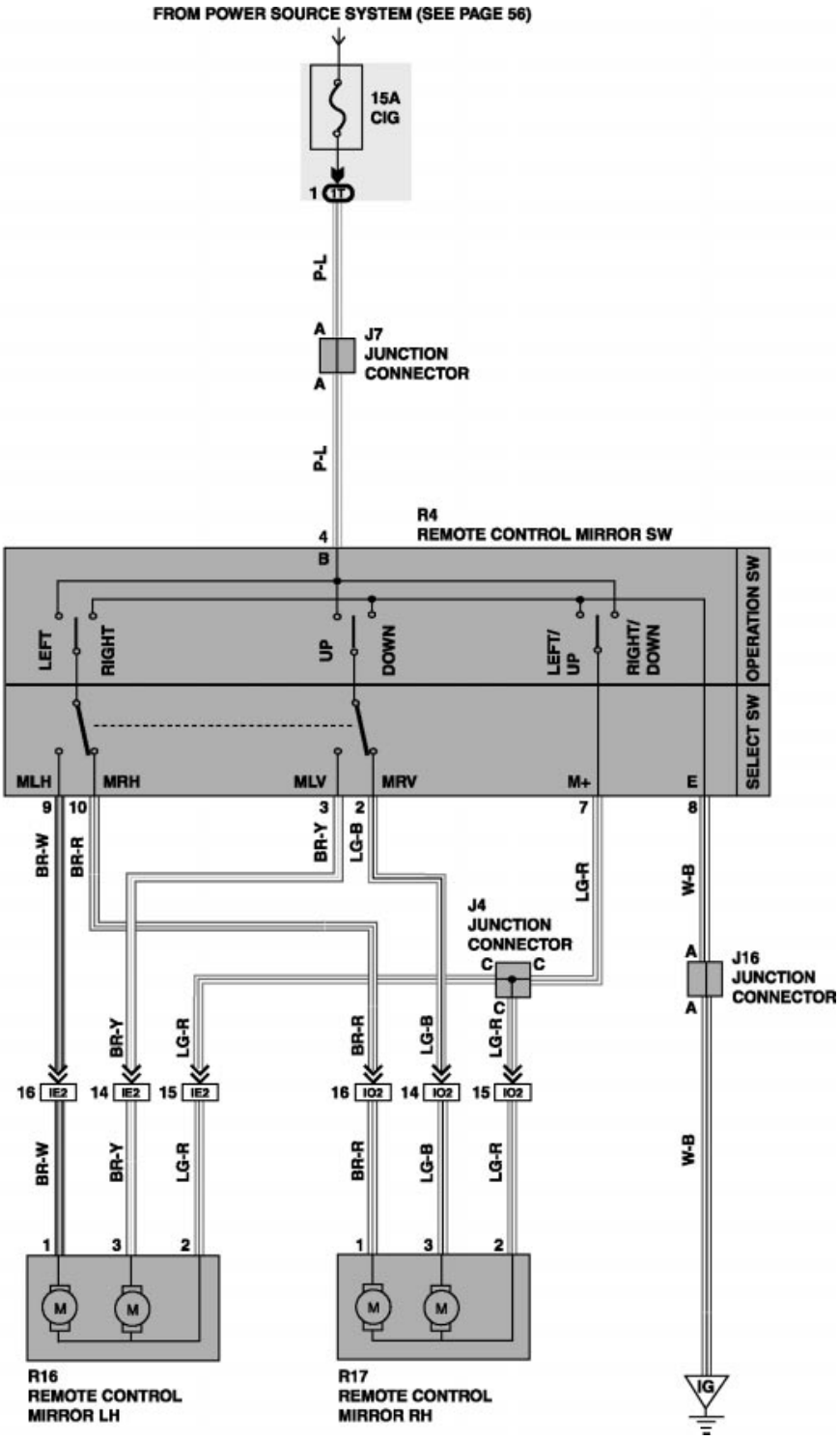

Circuit #4
Direction: Right
Mirror: Left

Switch Contact	Position
Left/Right Switch	
Up/Down Switch	
Left/Up Right/Down Switch	
MLH/MLV MRH/MRV Switch	

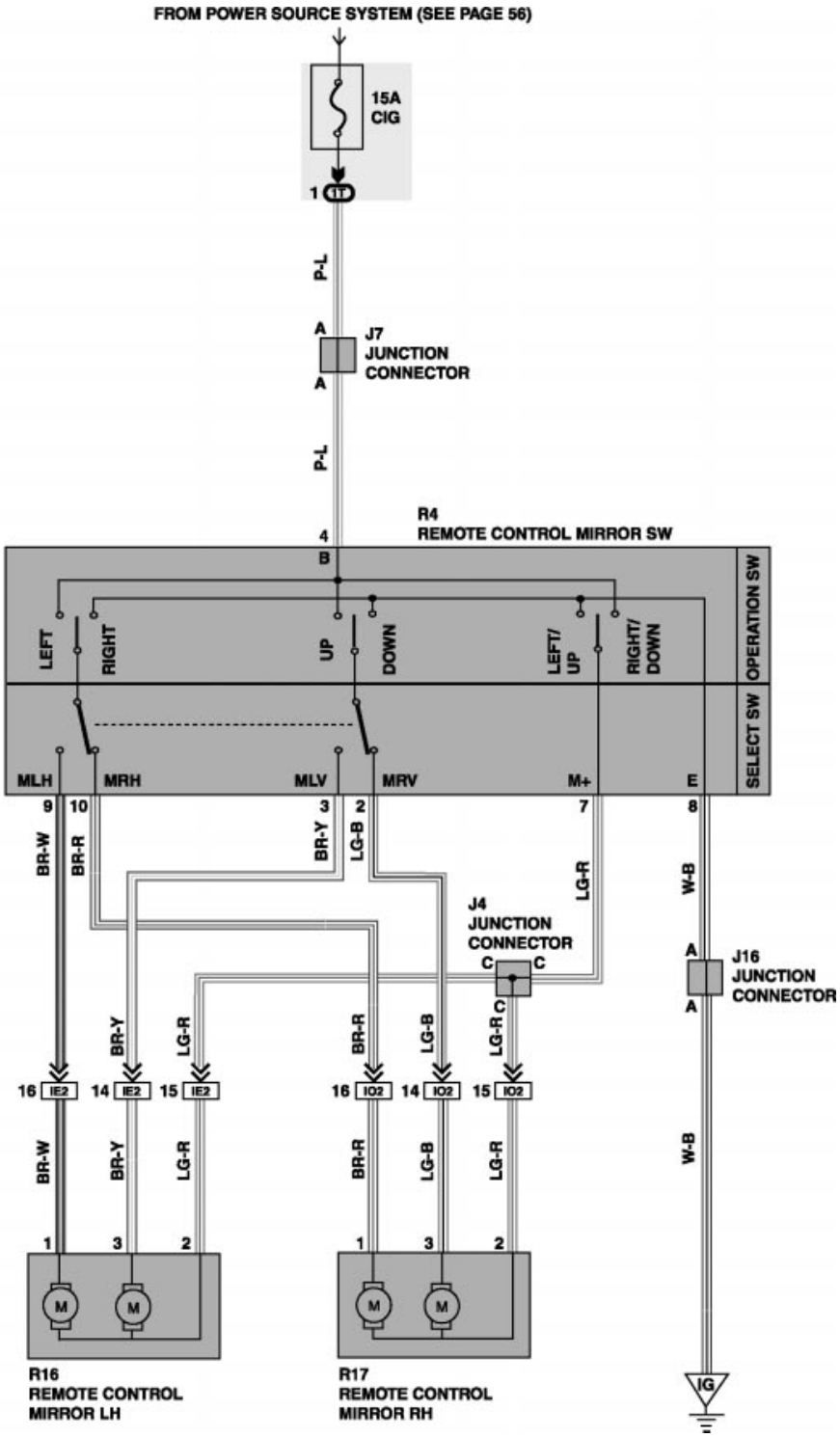

Tracing Current Flow - Remote Control Mirror Circuit

Name: _____ Date: _____

Review this sheet as you are doing *the Tracing Current Flow - Remote Control Mirror Circuit* worksheet. Check each category after viewing the instructor's presentation and completing the worksheet. Ask the instructor if you have questions regarding the topics provided below. Additional space is provided under topic for you to list any other concerns that you would like your instructor to address. The comments section is provided for your personal comments, information, questions, etc.

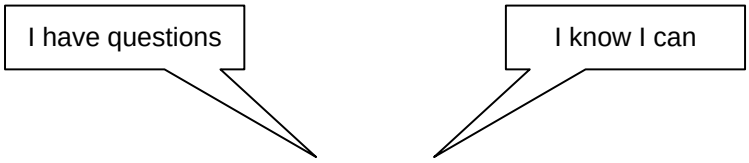

Topic			Comment
Tracing Current Flow path in a circuit			
Identifying Switch positions in an operating circuit			

Notes

WORKSHEET 2-3
Using the EWD

Vehicle	Year/Prod. Date	Engine	Transmission

Worksheet Objectives

At the conclusion of this worksheet, you will be able to locate the appropriate sections of the EWD and demonstrate the application of the information contained in those sections to the Passenger Side Remote Control Mirror Circuit Diagram.

Tools and Equipment

- 1998 ES 300 EWD

On the 1998 ES 300 there are a number of circuits. Some are fairly complex and some are simple. We will use the same process which we discussed earlier to analyze the following problem: **Customer complaint The Passenger Side Remote Control Mirror does not go up or down (Driver's Mirror OK).**

Section 1: Using the EWD

1. On what page is the **System Circuit Diagram** located?

   _____

2. Is there a **System Outline** in the Support Section?

   _____

3. List the **fuses** that are used in this circuit.

   _____

4. How do you know the fuse is OK?

   _____

5. In which **junction block** are the fuses located?

   _____

6. Where is the junction block located on the vehicle?

   _____

7. What **Ground Points** are used in this circuit?

   _____

8. Does the operation of other mirror functions confirm that the ground is OK?

_____

9. Where is the ground point for the mirrors located on the vehicle?

_____

10. The power and ground points are OK, but there is still no “UP/DOWN” operation of the Passenger Side Mirror. Looking at the diagram, what is the connector and pin # for the “Up/Down” motor?

_____

11. What is connector number for the Junction Connector which provides both a power and a ground path during “Up/Down” operation?

_____

12. In what section of the EWD do we find diagrams of the harness-to-harness connectors and where they are located?

_____

13. With the key ON, and the passenger side Remote Control Mirror switch in the “Up” position which pin on the Mirror Switch carries +B to the “Up/Down” motor?

_____

14. What does it mean when an “X” appears in a wiring diagram connector pin slot?

_____

15. Which section of the EWD gives you information on making wire repairs?

_____

Using the EWD

Name: _____ Date: _____

Review this sheet as you are doing the *Using the EWD* worksheet. Check each category after viewing the instructor's presentation and completing the worksheet. Ask the instructor if you have questions regarding the topics provided below. Additional space is provided under topic for you to list any other concerns that you would like your instructor to address. The comments section is provided for your personal comments, information, questions, etc.

I have questions

I know I can

Topic			Comment
Locate information using the EWD			

Notes

WORKSHEET 2-4
Tracing Current Flow - Remote Control Mirror Circuit

Vehicle	Year/Prod. Date	Engine	Transmission

Worksheet Objectives

At the conclusion of this worksheet, you will be able to demonstrate your skills in tracing the path of Current Flow in the Remote Control Mirror Circuit and locate the applicable sections of the EWD to solve a theoretical problem.

Tools and Equipment

- 1998 ES 300 EWD
- Green and Pink Highlighters

Tracing Current Flow - Remote Control Mirror Circuit

1. According to the Service Hints section how many volts are available at R4 / Pin #4 with SW at ACC or ON position?

   _____

2. On what page of the EWD can we find the location of connector IE2?

   _____

3. Pin #2 of connector R16 carries current to ground under which switch setting: Left/Up or Right /Down?

   _____

4. What happens to the LH Up/Down motor when the current flow is reversed?

   _____

5. What color is the J16 connector?

   _____

6. If we need to find ground IG where is it located on the vehicle?

   _____

7. What color is the wire(s) running through connector J4?

   _____

8. If the WB wire coming from R4 / Pin # 8 were to be broken how would this effect the mirrors?

   _____

9. A screw from an aftermarket installation cuts through the BRW wire between R4 / Pin #9 and R16 / Pin #1 and grounds it to the body.

   What is the result when the LH mirror is moved to the left?

   _____

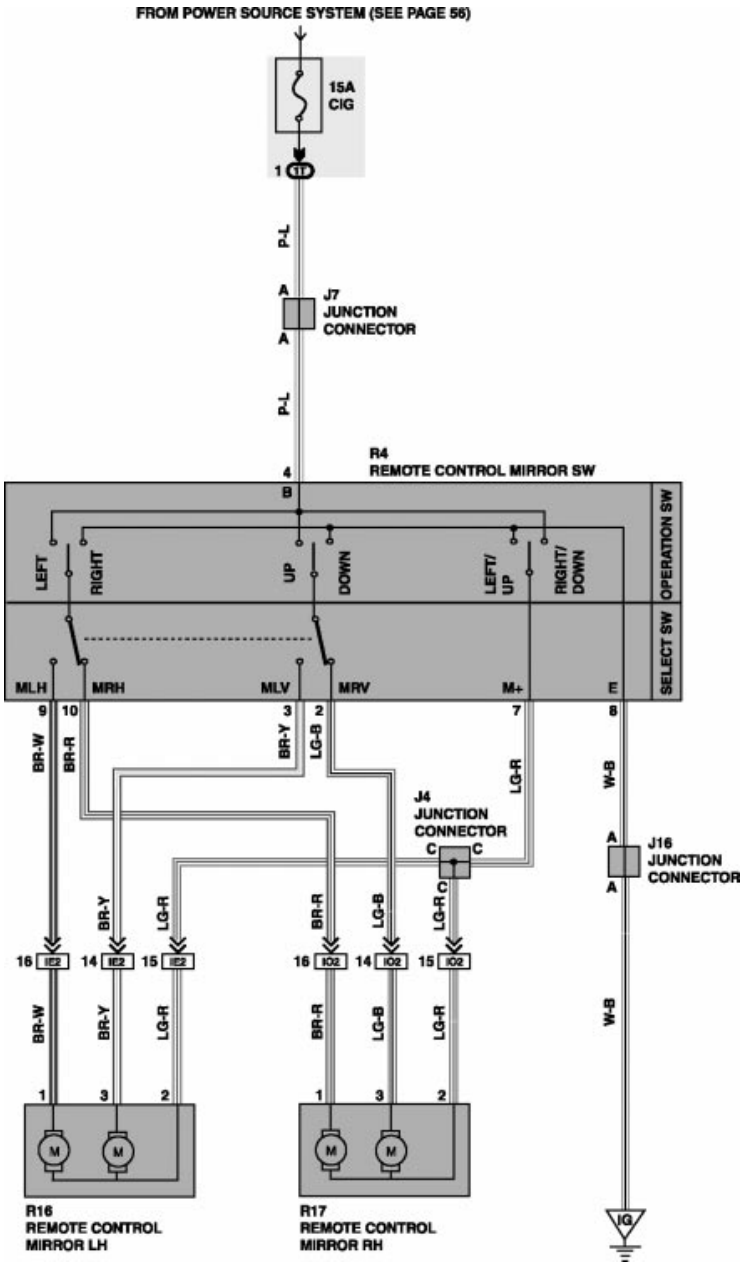

10. How many wires are used for the Remote Control Mirror Circuit in connector R16?

   _____

Tracing Current Flow - Remote Control Mirror Circuit

Name: _____ Date: _____

Review this sheet as you are doing the *Tracing Current Flow - Remote Control Mirror Circuit* worksheet. Check each category after viewing the instructor's presentation and completing the worksheet. Ask the instructor if you have questions regarding the topics provided below. Additional space is provided under topic for you to list any other concerns that you would like your instructor to address. The comments section is provided for your personal comments, information, questions, etc.

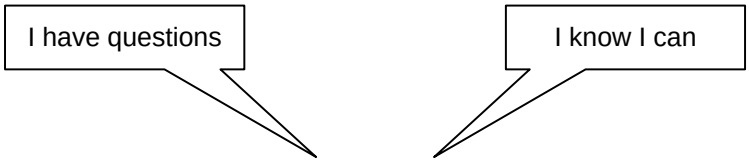

Topic			Comment
Tracing Current Flow path			
Locating EWD sections			

Notes

Section 3

Electrical Diagnostic Tools

Learning Objectives:

1. Explain what to look for when making a visual inspection.
2. Show the proper techniques for using a jumper wire.
3. Explain the advantages and features of Digital Multimeters.
4. Explain how to use a voltmeter to make open circuit and voltage drop measurements.
5. Explain how to use a digital ammeter, both series and inductive types.
6. Explain how to use a digital ohmmeter for resistance, continuity, and diode checks.
7. Perform on-car worksheets using all of the functions of the DVOM.

Notes

Introduction

After looking at a problem circuit on the EWD, you will need to determine if different components, connections, or wires are OK by making an on-car inspection. There are five circuit inspection tools that will be covered in this section:

- Visual
- Jumper Wires
- Digital Multimeter
  - Voltmeter
  - Ammeter
  - Ohmmeter

Visual Inspection

An important part of any diagnostic procedure is to **make a visual inspection** of the vehicle. A visual inspection can quickly catch the simple problems which may be related to the customer's complaint.

Operate the Circuit Thoroughly

Read the **EWD system outline** to find out *how the circuit is supposed to operate*. Then operate the circuit and determine exactly what is and what is not working.

This information can save a lot of time. With the help of the EWD, you can narrow down *on paper* the areas you will need to inspect first. By tracing the paths of current flow on the parts of the circuit that work, you can eliminate areas of the circuit that **are not** causing the problem.

EWD System Outline

Read the System Outline to find out how the circuit is supposed to work. Then thoroughly test the circuit, operating as many features/functions as possible.

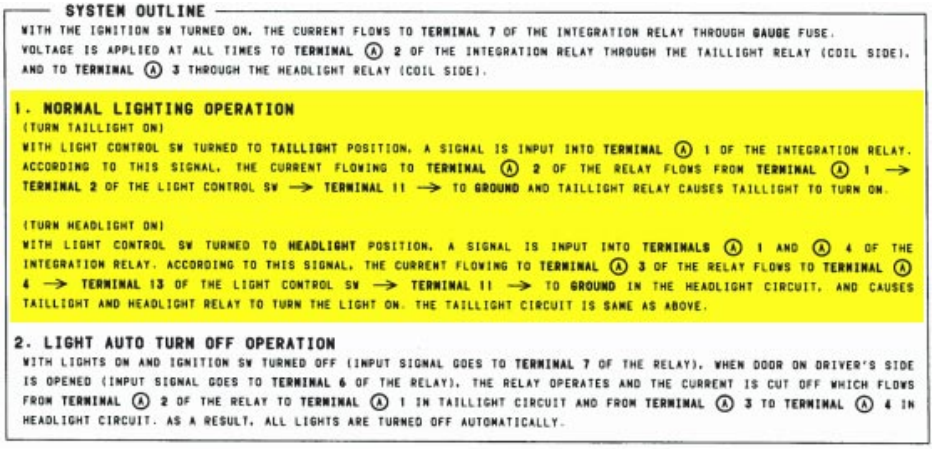

SYSTEM OUTLINE

WITH THE IGNITION SW TURNED ON, THE CURRENT FLOWS TO **TERMINAL 7** OF THE INTEGRATION RELAY THROUGH **GAUGE** FUSE. VOLTAGE IS APPLIED AT ALL TIMES TO **TERMINAL** Ⓐ **2** OF THE INTEGRATION RELAY THROUGH THE TAILLIGHT RELAY (COIL SIDE), AND TO **TERMINAL** Ⓐ **3** THROUGH THE HEADLIGHT RELAY (COIL SIDE).

1. NORMAL LIGHTING OPERATION

(TURN TAILLIGHT ON)

WITH LIGHT CONTROL SW TURNED TO **TAILLIGHT** POSITION, A SIGNAL IS INPUT INTO **TERMINAL** Ⓐ **1** OF THE INTEGRATION RELAY. ACCORDING TO THIS SIGNAL, THE CURRENT FLOWING TO **TERMINAL** Ⓐ **2** OF THE RELAY FLOWS FROM **TERMINAL** Ⓐ **1** → **TERMINAL 2** OF THE LIGHT CONTROL SW → **TERMINAL 11** → TO **GROUND** AND TAILLIGHT RELAY CAUSES TAILLIGHT TO TURN ON.

(TURN HEADLIGHT ON)

WITH LIGHT CONTROL SW TURNED TO **HEADLIGHT** POSITION, A SIGNAL IS INPUT INTO **TERMINALS** Ⓐ **1** AND Ⓐ **4** OF THE INTEGRATION RELAY. ACCORDING TO THIS SIGNAL, THE CURRENT FLOWING TO **TERMINAL** Ⓐ **3** OF THE RELAY FLOWS TO **TERMINAL** Ⓐ **4** → **TERMINAL 13** OF THE LIGHT CONTROL SW → **TERMINAL 11** → TO **GROUND** IN THE HEADLIGHT CIRCUIT, AND CAUSES TAILLIGHT AND HEADLIGHT RELAY TO TURN THE LIGHT ON. THE TAILLIGHT CIRCUIT IS SAME AS ABOVE.

2. LIGHT AUTO TURN OFF OPERATION

WITH LIGHTS ON AND IGNITION SW TURNED OFF (INPUT SIGNAL GOES TO **TERMINAL 7** OF THE RELAY), WHEN DOOR ON DRIVER'S SIDE IS OPENED (INPUT SIGNAL GOES TO **TERMINAL 6** OF THE RELAY), THE RELAY OPERATES AND THE CURRENT IS CUT OFF WHICH FLOWS FROM **TERMINAL** Ⓐ **2** OF THE RELAY TO **TERMINAL** Ⓐ **1** IN TAILLIGHT CIRCUIT AND FROM **TERMINAL** Ⓐ **3** TO **TERMINAL** Ⓐ **4** IN HEADLIGHT CIRCUIT. AS A RESULT, ALL LIGHTS ARE TURNED OFF AUTOMATICALLY.

Fig. 3-1
L652I301

Checking Connectors & Terminals

Connector problems are one of the most frequent causes of electrical problems. Typical problems include:

- Connectors not “locked”
- Terminals backed out/not seated
- Corrosion or moisture
- Excessive terminal spread

Excessive Terminal Spread

This problem is one of the most difficult to detect, especially when the female terminal mates directly to a component or ECU. To check the “fit” of the female terminal you can either use a new male terminal from the *Lexus Wire Harness Repair Kit* or use the **Lexus Terminal Tension Gauge SST**.

NOTE

When diagnosing the cause of an intermittent problem, make your inspections *strategically.* Keep in mind that disconnecting connectors or moving the position of wires and harnesses can cause the problem to temporarily “fix” itself. There is no “magic” to electricity; be sure to isolate and repair the cause of the problem.

Terminal Problems

Typical terminal problems include a poor crimp of the wire to a terminal, and terminal tension or spread. The terminal can be checked using the Terminal Tension Gauge SST. If the contact at the terminal is loose, you can be fooled when you backprobe the terminal at the component—the voltmeter reads voltage, but the pin isn’t feeding it to the component.

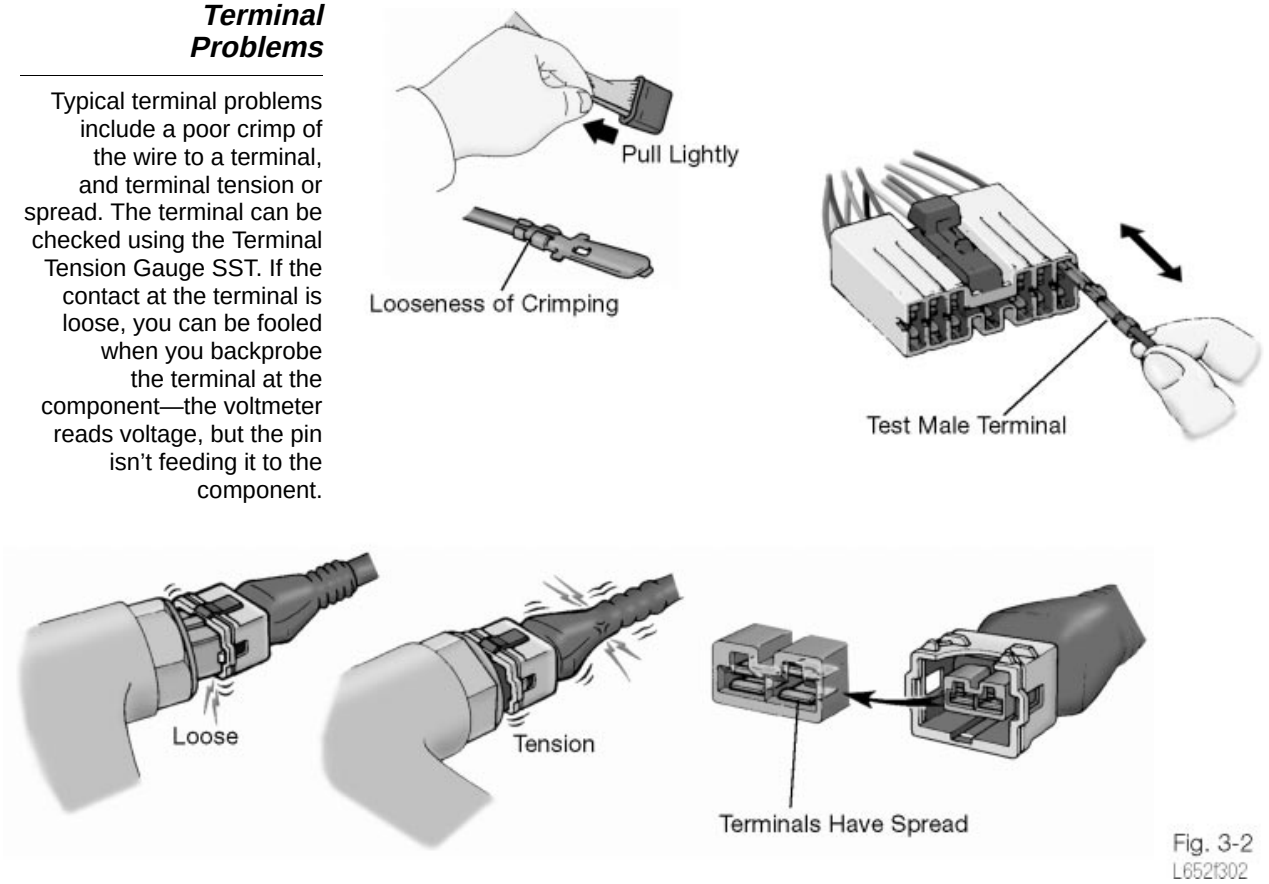

Fig. 3-2
L652f302

Wire Harness Inspection

Typical wire harness problems include:

- **Wires chafing or rubbing:** If a harness is mis-routed, the wire wrap and insulation may rub through, exposing the bare wire for a potential short-to-ground.
- **Harness stretched too tightly:** This condition can cause an open circuit problem that will be difficult to detect. Because of excessive tension on the harness, the wire strands break away from the terminal crimp or break internally. When this happens, the insulation of the wire will look normal, the wire strands will be open. You can check for this condition by squeezing the insulation adjacent to the terminal, feeling for any “soft” spots.
- **Abnormal Kinks or bends:** Sharp bends in the wiring harness, particularly where the wire is subject to repeated flexing, can cause an internal break of the wire strands.

Wire Harness Problems

Look for chafing, sharp bends, and harnesses that are stretched too tightly.

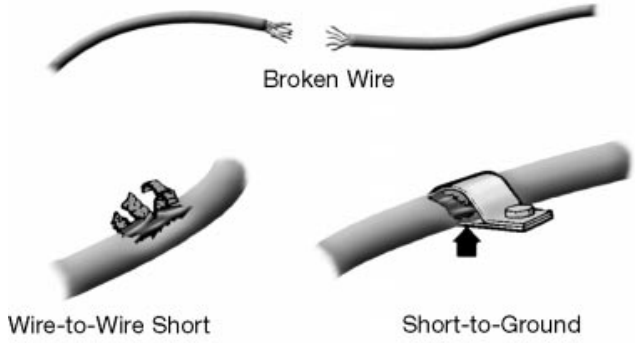

Fig. 3-3
L652f303

Visual Inspection Hints

Visual inspection hints:

1. **Know how the system or circuit is supposed to operate.** This is extremely important, especially with the increased use of ECU controls. Because these small computers have *logic* functions, they are designed to operate *only under certain conditions*. You can find under what conditions the ECU will (or will not) operate the circuit by reading the **System Outline** in the EWD. This will prevent you from looking for a problem that doesn’t exist.
2. **Check those items that are easiest to access first.** The “easy ones” may or may not be the cause of the problem, but as a time saving strategy, this is probably the best approach. Connectors or components that are hard to access should be checked on an “as needed” basis.

3. **Use your experience with past problems to help determine where to look first.** Diagnosing a problem is a process of elimination. If the list of possible causes is long, using your past experience can give you an “edge” in tracking down the problem quickly. While your past experience with a similar problem may not be the “fix” for the vehicle you are working on, it can at least give you a starting point which will lead you to the cause of the problem.

Jumper Wires

A simple **jumper wire** can be a very useful tool when diagnosing an electrical problem. A jumper wire, when used in conjunction with the EWD or Repair Manual, provides a quick way to check the operation of a circuit by *bypassing specific sections of wiring, switches, or components*. By eliminating parts of the circuit, or by applying voltage and/or ground directly to the load, you can isolate the exact location of a problem.

CAUTION

- To prevent circuit damage from an accidental short-to-ground, **only use a fused jumper wire**, heavy enough to handle the load you are operating.
- **Never by-pass the LOAD.** This will create a direct short-to-ground in the circuit. Use the EWD or RM to determine where to connect the jumper wire.

Correct Connection of a Jumper Wire

Using the EWD you can determine where it’s OK to connect a jumper wire. Note that if a jumper wire was connected at Pin 1 of the Taillight Relay, a short-to-ground would result.

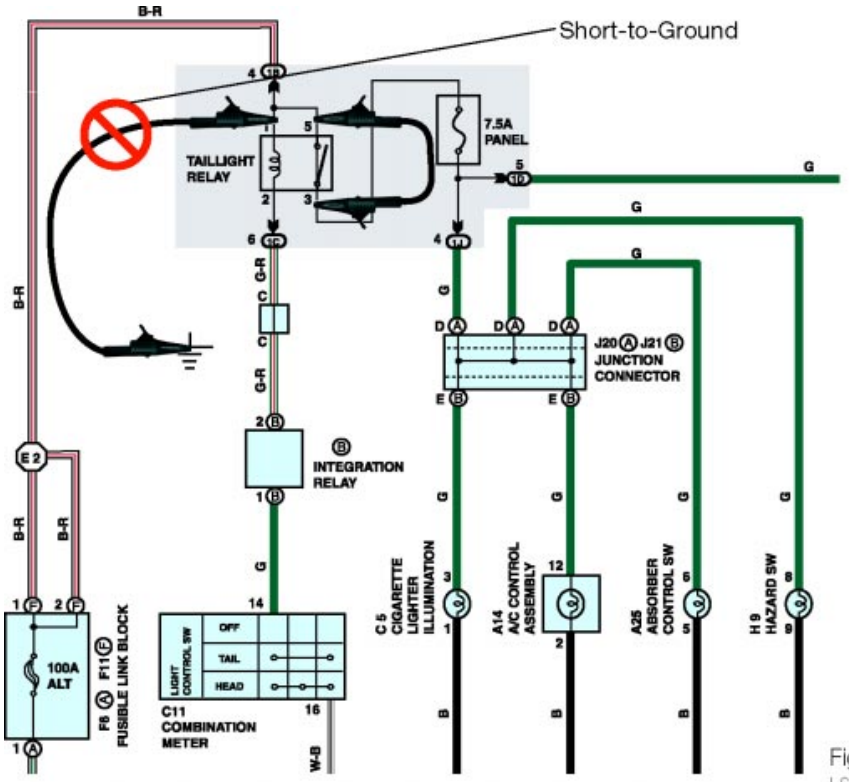

Fig. 3-4
L652f304

Digital Multimeters

With the introduction of oxygen sensors into the fuel control systems of vehicles in the early 1980s, we were also introduced to the use of **digital multimeters**. These early meters were bulky and relatively expensive, when compared to analog meters.

Digital multimeters are now fairly commonplace. With DVOMs available at about the same price as analog meters, the DVOM is definitely the best measurement tool for general electrical diagnosis. The advantages to using a DVOM over an analog meter are:

- **Easier to use:** "Auto-ranging" meters self-adjust to the range needed for a specific measurement. This is particularly helpful when measuring resistance values.
- **Accuracy:** Because of the high internal resistance (or *high impedance*) of most DVOMs, the accuracy of the meter is increased. The small *power supplies* that are built into many ECUs or the voltage produced by the O2 Sensor will be affected by the **load** placed from the voltmeter. If the voltmeter draws too much current (low internal resistance), the circuit voltage is "pulled" low, causing the measurement to be inaccurate. Since most DVOMs have at least 10 MΩ of resistance built-in, their affect on the circuit voltage is very minimal.
- **Not sensitive to polarity:** When using the voltmeter, the probes can be connected in *reverse polarity* without affecting the accuracy of the reading or damaging the meter. The meter will indicate this reverse polarity condition by placing a "-" symbol in the display.
- **Durability:** Most good quality meters can withstand a substantial amount of shock without damage.
- **Long battery life:** Batteries can last in excess of 200 service hours on DVOMs. Some models also have an automatic shut-off feature.

Digital Multimeters (DVOM)

The Digital Voltmeter (DVOM) comes in a variety of configurations and price ranges. A good general purpose meter can be purchased for less than $100, with the full featured meters ranging from $200 to $400.

Fig. 3-5
L652f305

Additional Meter Features

Many good quality DVOMs have additional features that can be helpful when diagnosing difficult problems:

- **"Min-Max":** Holds in memory a maximum or minimum voltage or amperage value measured over a period of time. This is extremely helpful to identify a problem such as an intermittent +B or ground connection.
- **Analog Bar Graph:** Most digital displays *refresh* or update about 2 times a second. However, some electrical problems (especially in ECU controlled circuits) can be sensitive to electrical "glitches" that can happen in less than 100 mSec. In the past, an *oscilloscope* was needed identify these problems. With an Analog Bar Graph feature, some DVOMs can show a voltage change happening up to 50 times a second.

While DVOMs have a lot of useful features to help you in diagnosing electrical problems, one major drawback is that these meters are not necessarily user-friendly. Learning to read the meter and use its features requires **practice**.

Additional Features of DVOMs

Because there are so many features on some of these meters, you look at the UNITS display at the side of the meter. This will tell you if you are looking at Volts, Ohms, Kilo-ohms, Hertz, Percent Duty Cycle, or if the Min-Max function is operating.

Symbol	Prefix	Meaning	Automotive Use
M	Mega	X Million	None
K	Kilo	X Thousand	Ohms, Volt
		Single Unit	All
m	milli	X thousandth	Amps
µ	micro	X millionth	None

Fig. 3-6
L652I306

Digital Voltmeter

The most frequently used feature of a DVOM is the voltmeter. A voltmeter is useful to determine if there is voltage present at specific points in the circuit when diagnosing open circuit problems. By applying the series circuit voltage drop concept, it can also be used to quickly isolate the location of any high circuit resistance problem.

Measuring Open Circuit Voltage or Pin Voltage

Measuring Open Circuit Voltage or Pin Voltage:

1. Connect the **negative probe to ground at the component ground terminal or to a known good ground**.
2. Connect the **positive probe to the pin** you want to inspect

HINT

- If the meter is **auto-ranging**, fix the display to show only 1 decimal point. If the meter is **non auto-ranging**, use the 20V range.
- Remember that an open circuit voltage measurement tells you only **if there is a connection to B+**; it DOES NOT tell you how **much resistance** there is in the connection or circuit.

Measuring Open Circuit Voltage

This inspection can be made by backprobing the terminal, or from the front with the connector disconnected. If you have to probe from the front of the connector, NEVER insert the test probe into a female terminal.

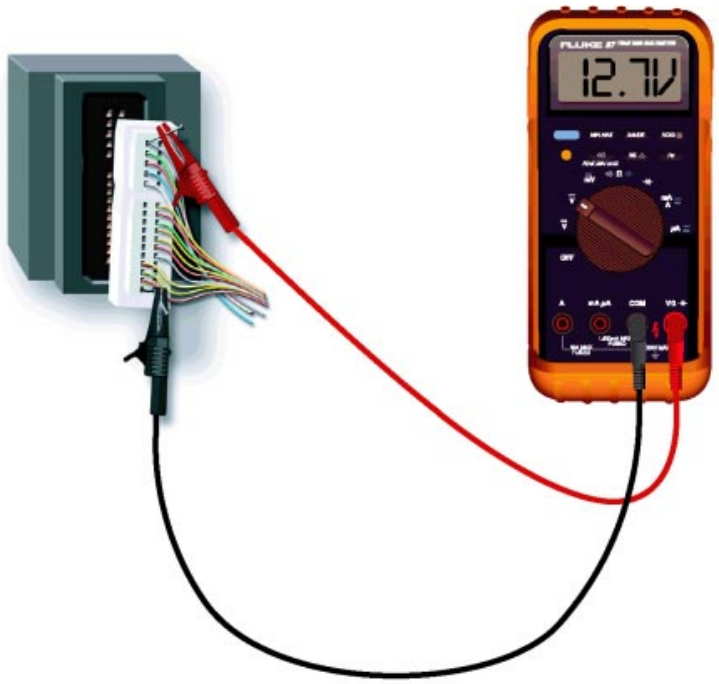

Fig. 3-7
L652f307

Voltage Drop Measurement

A **voltage drop** measurement is taken *dynamically* while the circuit is in operation.

1. Turn the circuit **ON**.
2. Connect the positive and negative probes of the meter in parallel to the component or section of the circuit you want to check.

- By using the EWD, you can isolate portions of the circuit and check for unwanted resistances.
- A measurement of 0 Volts can indicate two different conditions:

  a. There is virtually no resistance in the part of the circuit you are checking.

  b. The circuit is OFF or open; no current flow.

HINT

This is the most accurate way to detect a problem resistance in high amperage (above 3 or 4 amps) circuits. In these circuits, even a resistance of 1Ω or less can have a big effect on the load. Because the test is done while the circuit is operating, factors such as the amount of current flow and the heat generated will be taken into account.

Measuring Voltage Drop

Connect the voltmeter in parallel to the part of the circuit you want to check by backprobing the connector. Remember the load should be getting about the same as battery voltage WHILE THE CIRCUIT IS OPERATING.

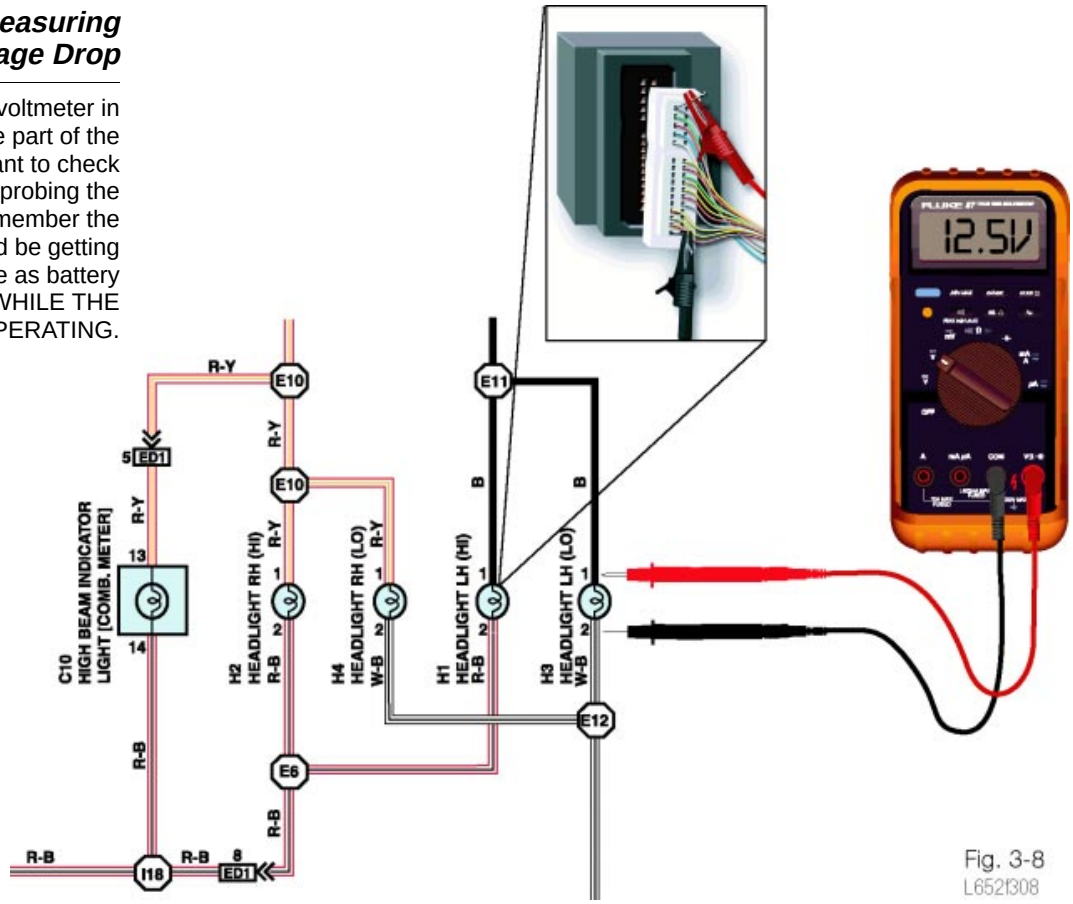

Fig. 3-8
L652I308

Digital Ammeter

Because Repair Manual and EWD specifications are usually in volts, the ammeter is not frequently used as a tool in body electrical diagnosis. It can, however, be a very effective tool.

The ammeter is typically used in:

1. **Starting and Charging System** inspection
2. **Diagnosing parasitic load problems.** A *parasitic load* is sometimes referred to as a “draw”, something that drains the battery while the car is parked overnight.

The ammeter can be used to dynamically test the condition of a circuit. But because amperage specs are not found in the RM or EWD for most circuits, and because ammeters cannot pinpoint the location of a problem like a voltmeter can, it is not frequently used in body electrical diagnosis.

HINT

If a component in a circuit is particularly difficult to access (such as the electric fuel pump), an amperage measurement of the circuit can be a good indicator of the circuit’s condition. Because there are no specs given for this circuit, you will need to **measure the amperage draw of the same circuit on a known good vehicle**, and **compare the readings** to determine if you have a problem.

Diagnosing with an Ammeter

For the fuel pump, an ammeter can be put in series at the +B and Fp terminal (key ON, engine OFF). This operates the fuel pump and lets you check the amount of amperage the fuel pump is drawing. Compare this reading to a known good vehicle.

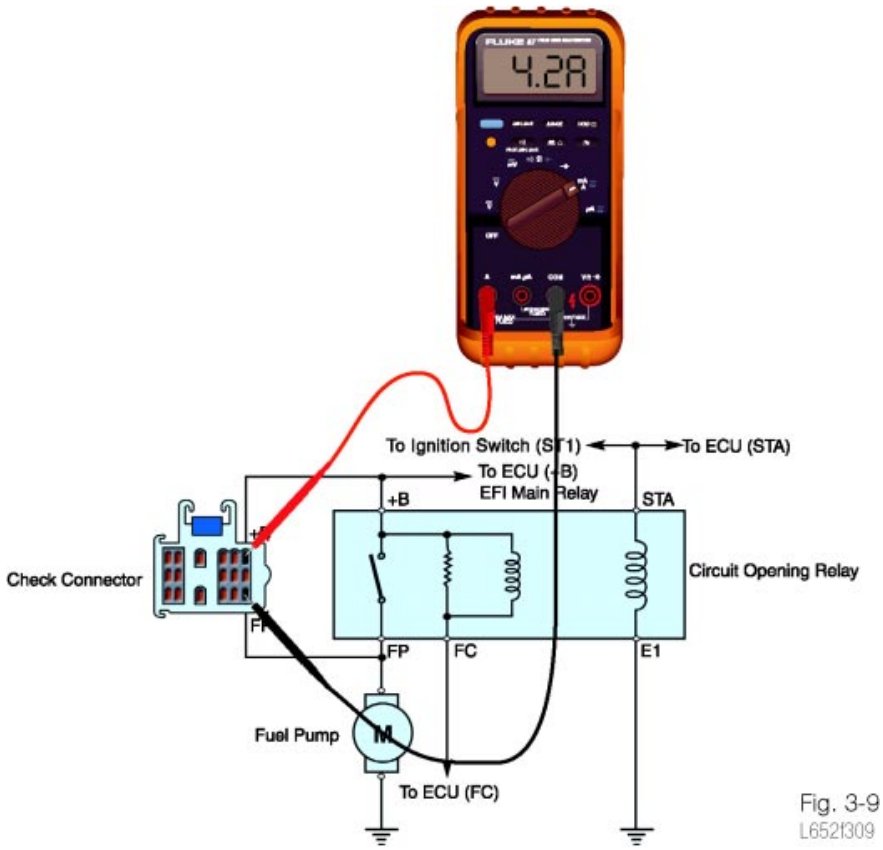

Fig. 3-9
L652I309

Types of Digital Ammeter

There are two types of ammeters: a *series type* and *clamp type*.

A **series type ammeter** is the type of meter that is built into every DVOM. This meter is designed to measure relatively small current flows (below 10A). Most meters measure in either *milliamps (mA)* or *Amps (A)*. Before connecting the meter into the circuit, make sure the circuit draw is within what your meter can handle. It is a good practice to initially set the meter to the highest range available, and lower the range while the current is being measured. Most ammeters are fuse protected to prevent damage from short-to-grounds or overload conditions. The series type ammeter is best suited for measuring current flows below 1A.

We have been using **clamp type ammeters** for years on starting/charging system testers such as the Sun VAT- 40/60. This type of ammeter is also available as an accessory that you can use with any DVOM. These battery-powered clamp type ammeters (sometimes referred to as "inductive-type" ammeters) measure current flow by sensing the strength of the magnetic field produced around the wire while current flow is present. These clamps then convert this amperage reading into a **voltage** which is read with the **DVOM set to measure millivolts**. Due to a lack of accuracy below 1 amp, these accessories are best suited for any amperage measurement except normal parasitic loads. It can be used to troubleshoot a high parasitic load problem if the "draw" is above 0.5A, depending on the model of "amp clamp" you are using.

The correct connections for each type of ammeter are shown in Figure 3-10.

Series and Inductive Ammeters

Series ammeters require the circuit to be "disconnected" in order to connect the ammeter. Inductive ammeters simply attach around the wire, but cannot measure low readings.

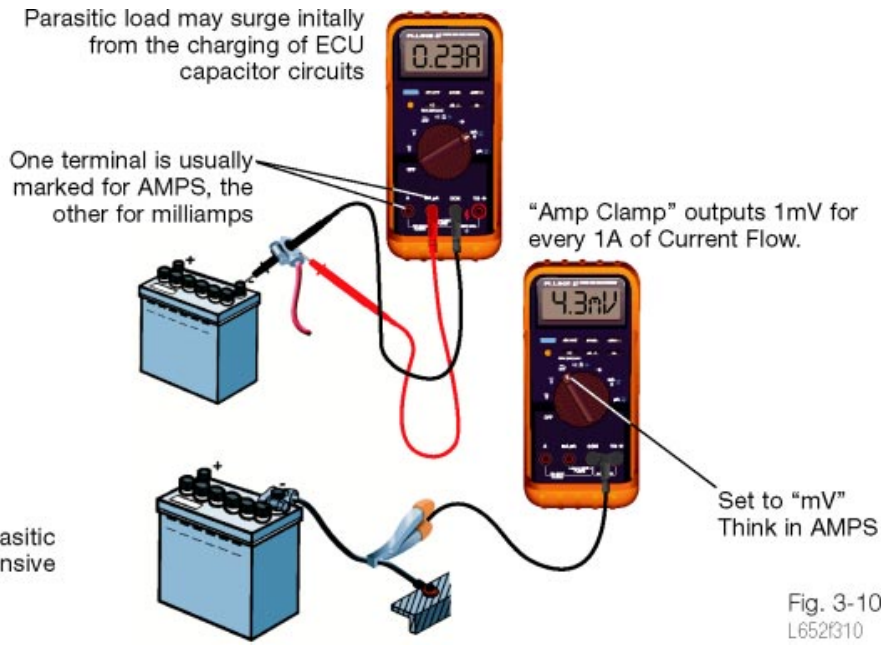

Fig. 3-10
L652f310

Digital Ohmmeter

An ohmmeter measures the amount of electrical resistance between two points. The digital ohmmeter has several significant advantages over its analog counterpart:

- Easier to read—the sweep doesn't go "backwards"
- "Zero" resets automatically
- Extremely accurate

Digital Ohmmeter Display

If you are using the meter in auto-ranging mode, be sure to look at the units (KΩ or Ω) at the side of the display or on the range selection knob.

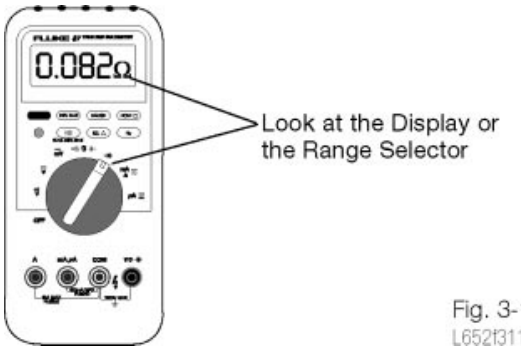

Fig. 3-11
L652f311

Additional Features - Diode Check

When connecting an ohmmeter, make sure that the circuit or component is isolated from parallel branches or other voltage sources. Most good quality meters are "forgiving" when accidentally connected to voltage, but analog meters and low priced DVOMs may not be.

In the past, an ohmmeter was commonly used to check diodes. The operation of the diode could be verified by checking for continuity in one direction, and for no continuity in the other. However, the voltage that a digital ohmmeter uses to make its resistance measurement is usually less than 0.2V. This low voltage is not enough to "forward bias" the diode, so the diode will show no continuity in either direction.

NOTE

Most good quality DVOMs have a diode check function. This function (on the better meters) will tell you the f*orward bias voltage drop* of the diode—the amount of voltage required to turn ON the diode so that current will flow through it. **For the silicon diodes found on the car, this voltage should be around 0.5V.**

Diode Check

Use the diode check function to check the condition of a diode. Besides in the alternator, diodes are used frequently in the wiring harness to provide circuit isolation. Look for about 0.5V with the diode check function.

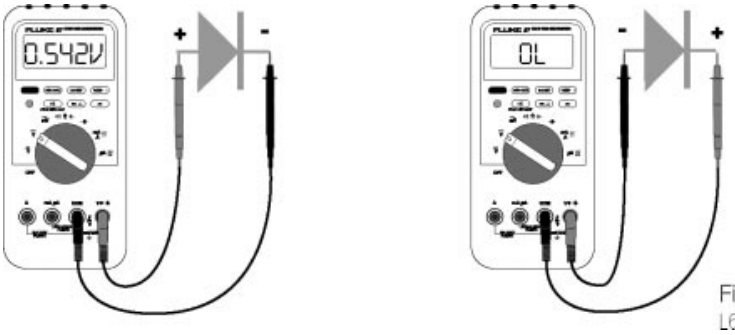

Fig. 3-12
L652f312

Some low priced meter's diode check function do not measure the forward bias voltage drop. Instead, these meters simply raise the voltage used by the ohmmeter to allow a check for continuity in one direction and no continuity in the other. The number on the display is **not** a voltage drop.

Additional Features - Audible Continuity Beep

When working under the instrument panel or in an area where the face of the meter is not easily visible, the audible continuity beep is helpful. The specifications for this feature vary between meter manufacturers. Most meters will "beep" whenever there is a less than a specified amount of resistance measured. (This can mean **within double the range** selected or could be just 5 - 10% of the range selected on the meter.) On many meters, the "beep" feature also works with the voltmeter.

Continuity Beep

Audible tone to let you know that there is a connection in the circuit.

Fig. 3-13
L652f313

Ohmmeter Common Mistakes

- **Zero Ohms:** Don't confuse 0Ω with ∞ or OL, An ***infinite*** **amount** of resistance means that there is an OPEN in the circuit—no current flow can get through. ***Zero ohms*** **indicates perfect continuity, no resistance to current flow.**
- **Placement of the Decimal Point:** Auto-ranging meters automatically change the display from ohms (Ω) to kilo ohms (KΩ).

CAUTION

Never test an ECU directly with an ohmmeter. The measurement made will be inconclusive at best, and could cause damage. The correct method for using the ohmmeter is shown in the diagram below.

Using an Ohmmeter

Make sure the ohmmeter is isolated from voltage, and from parallel branches that shunt around the area you want to check.

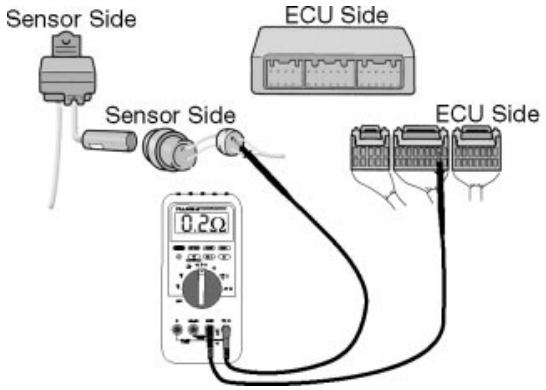

Fig. 3-14
L652f314

WORKSHEET 3-1
Voltage Drop Measurement/Switch #17 (Instructor Led)

Vehicle	Year/Prod. Date	Engine	Transmission

Worksheet Objectives

At the conclusion of this worksheet, you will be able to reference the EWD to locate information applicable to the ES 300 Simulator Interior Light Circuit and measure available Voltage and Voltage Drop.

Tools and Equipment

- 1998 ES 300 EWD
- Lexus Body Electrical Simulator
- DVOM

Voltage Drop on the ES 300 Simulator Interior Light Circuit: Dome Light Too Dim With Door Opened

Remember: In a series circuit all of the loads will add up to the source voltage. In a parallel circuit, each load receives the source voltage.

1. On a copy of the EWD, trace the current flow through the ES 300 Interior Light Circuit when the door is opened.

2. Using a voltmeter and the Lexus Body Electrical Simulator, measure the voltage at the **fuse**.

   _____

3. Which fuse provides power for this circuit?

   _____

4. What is the available voltage for this circuit?

   _____

5. What is the connector number for the Integration relay?

   _____

6. Which splice is common to connectors V9, P5, V8, and I16?

   _____

7. What is the ground connector number for the Interior Light?

   _____

8. Before we go too far with testing what component might we take a look at?

_____

9. What is the available voltage at I16/pin 2

_____

10. Now measure the voltage at I16 across the load. Which pins will you be checking?

_____

11. What is the voltage drop across these pins and what does this number mean?

_____

12. What is the wire color leading to the Integration Relay out of I16 / Pin # 1?

_____

13. If we find the bulb and socket to be good where could we place a fused jumper wire in order to test for high resistance or a bad ground?

_____

14. Is there an easier way to check for this problem and if so what is it?

_____

_____

Notes

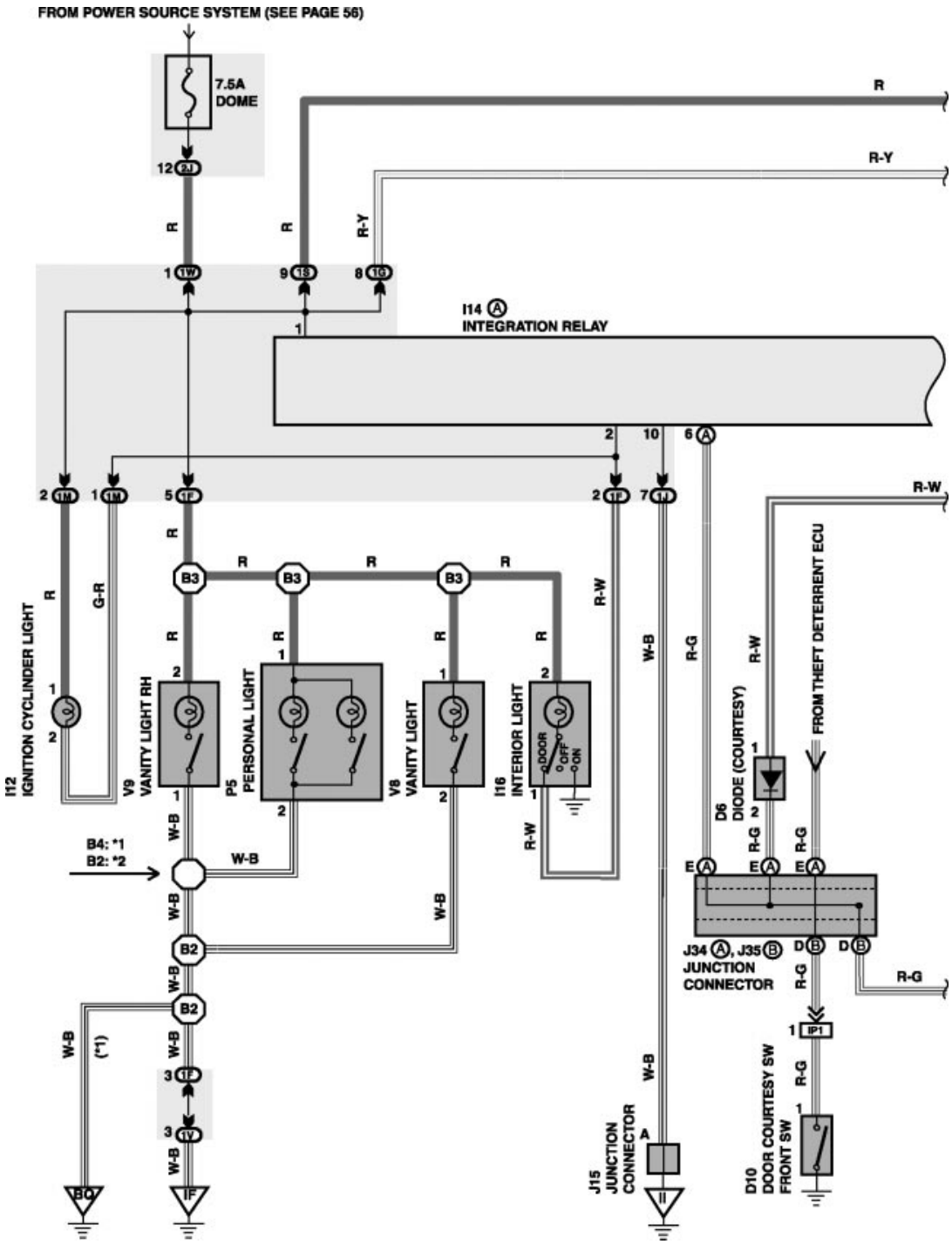
FROM POWER SOURCE SYSTEM (SEE PAGE 56)
7.5A
DOME
I14 A
INTEGRATION RELAY
I12
IGNITION CYCLINDER LIGHT
V9
VANITY LIGHT RH
P5
PERSONAL LIGHT
V8
VANITY LIGHT
I16
INTERIOR LIGHT
DOOR
OFF
ON
D6
DIODE (COURTESY)
FROM THEFT DETERRENT ECU
J34 A, J35 B
JUNCTION
CONNECTOR
J15
JUNCTION
CONNECTOR
D10
DOOR COURTESY SW
FRONT SW
B4: *1
B2: *2
(*1)
R
R-Y
R-W
R-G
W-B
G-R

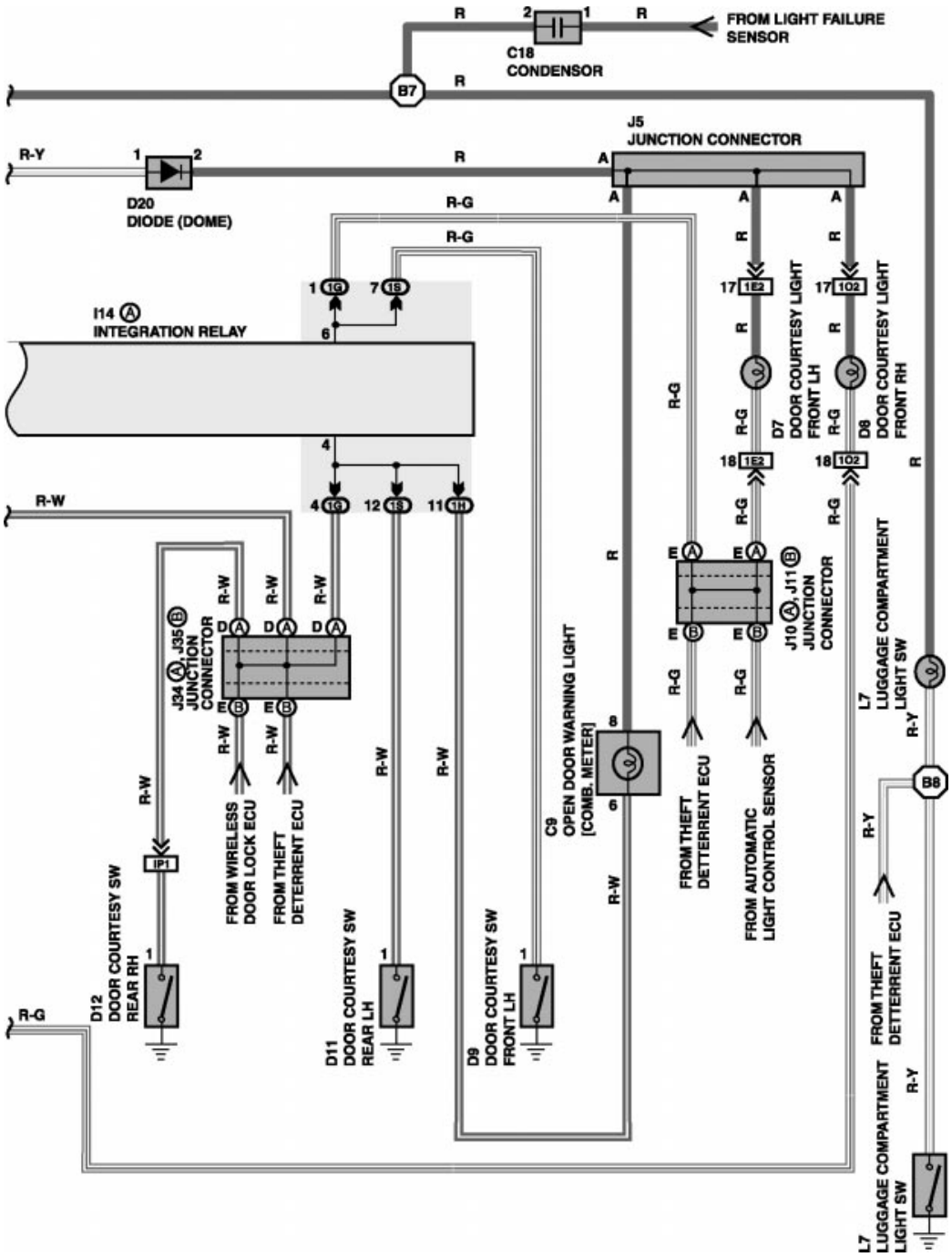
FROM LIGHT FAILURE SENSOR
C18 CONDENSOR
B7
J5 JUNCTION CONNECTOR
D20 DIODE (DOME)
I14 INTEGRATION RELAY
D7 DOOR COURTESY LIGHT FRONT LH
D8 DOOR COURTESY LIGHT FRONT RH
J10, J11 JUNCTION CONNECTOR
J34, J35 JUNCTION CONNECTOR
FROM WIRELESS DOOR LOCK ECU
FROM THEFT DETERRENT ECU
FROM AUTOMATIC LIGHT CONTROL SENSOR
C9 OPEN DOOR WARNING LIGHT [COMB. METER]
D12 DOOR COURTESY SW REAR RH
D11 DOOR COURTESY SW REAR LH
D9 DOOR COURTESY SW FRONT LH
L7 LUGGAGE COMPARTMENT LIGHT SW
B8

Notes

Voltage Drop Measurement/Switch #17 (Instructor Led)

Name: _____ Date: _____

Review this sheet as you are doing the *Voltage Drop Measurement/Switch #17* worksheet. Check each category after viewing the instructor's presentation and completing the worksheet. Ask the instructor if you have questions regarding the topics provided below. Additional space is provided under topic for you to list any other concerns that you would like your instructor to address. The comments section is provided for your personal comments, information, questions, etc.

I have questions

I know I can

Topic			Comment
Locating sections of the EWD			
Tracing the path of Current Flow in the circuit			
Measuring available Voltage in a circuit			
Measuring Voltage Drop in a circuit			

Notes

WORKSHEET 3-2
Measuring Amperage

Vehicle	Year/Prod. Date	Engine	Transmission

Worksheet Objectives

At the conclusion of this worksheet, you will be able to connect and use a DVOM with an Inductive Ammeter to identify a Parasitic Load in a circuit.

Tools and Equipment

- 1998 ES 300 EWD
- Vehicle
- DVOM with Inductive Ammeter

Section 1: Series Type Ammeter Parasitic Load

Using a DVOM ammeter connected in series to the negative battery cable, measure the current flow under the following conditions:

Measuring Parasitic Load
Connect the Ammeter in series with the negative battery cable.

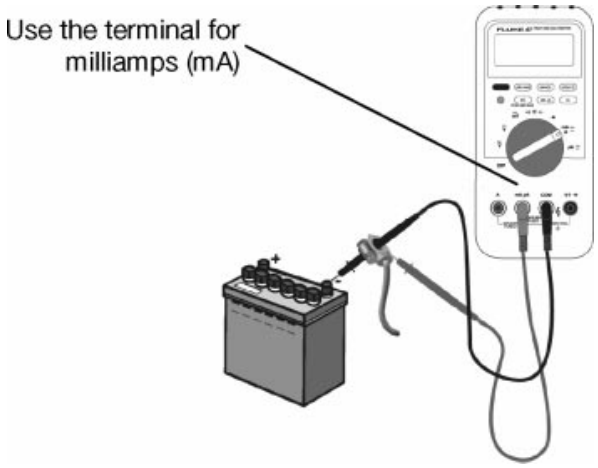

Condition	Amps	Notes
Parasitic Load (initial)		
Parasitic Load (continuous)		

1. Which components account for normal parasitic load?

_____

2. What is considered a “normal” amount of parasitic load?

_____

3. Once you have identified that a parasitic load exists, what do you need to do to isolate that load?

_____

Section 2: Checking Heated Seats

Connect the Amp Clamp to the Negative cable of the battery as though you were looking for parasitic load. Get a base reading with the heaters turned off. Then turn one heater on at a time.

Using the DVOM
The basic difference in the Series hookup and the Amp Clamp is the setting difference of mV vs. mA.

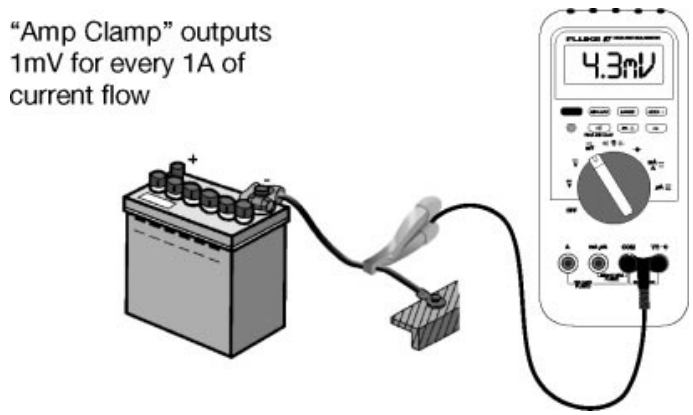

Condition	Amps	Notes
Amps with Seats OFF		
Amps with Driver's Seat ON		
Amps with Both Seats ON		

4. Was there a significant difference between the Driver's and the Passenger's Seat?

_____

_____

5. How could this information be used in diagnosing a seat heater complaint?

_____

_____

Section 3: Inductive Type Ammeter

Using a DVOM with Inductive-type Ammeter connected to the negative battery cable, measure the Current Flow with the listed components operating. Then apply Parallel Circuit Current Flow principles to calculate the amount of Amperage that is used by each individual circuit.

Using an Inductive Ammeter

If using an Inductive-type Ammeter connected to a DVOM, remember that you must set the meter up to measure millivolts (mV) and Amperage (A)!

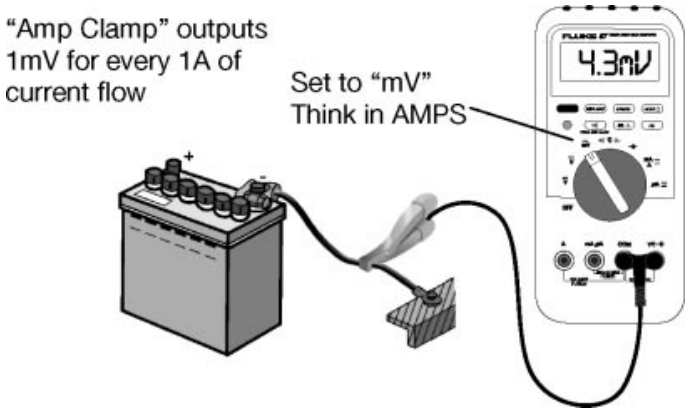

Load	Amperage Measured at Battery	Calculation	Individual Circuit Amperage	Notes
Ignition Switch ON				
Rear Defogger				
Stop Lights				
Headlights				
Radiation Fan (Open Water Temp. Switch)				
Heater - A/C Fan: Low				
Heater - A/C Fan: High				

6. Another amperage check which is interesting is the amount of current required to drive audio speakers. All of us have seen systems installed in vehicles which looked as though they belonged on a stage rather than in the trunk of a car. Using your amp clamp or series hook up at the battery, let's check out the differences.

Amp Readings

Radio Off	**mAmps**				
Radio On	**mAmps**				
Level		**25%**	**50%**	**100%**	
Bass Up					
Volume Up					**Caution: Quick up and down**

7. Another check involves the Power Window system. With your amp clamp installed on the battery cable, note the change in current flow when you raise and lower the windows. Enter the values in the table below.

Condition	Amps	Notes
Baseline		
Driver's Window Down		
Driver's Window Up		

8. If you have a customer complaint which involves one of the power windows and you verify that the condition is present you can check the amperage draw spec you get with a known good car. Chances are if the reading is lower than the known good car there is a resistance problem somewhere in the system. List the possible problem areas:

_____

_____

_____

_____

_____

Measuring Amperage

Name: _____ Date: _____

Review this sheet as you are doing the *Measuring Amperage* worksheet. Check each category after viewing the instructor's presentation and completing the worksheet. Ask the instructor if you have questions regarding the topics provided below. Additional space is provided under topic for you to list any other concerns that you would like your instructor to address. The comments section is provided for your personal comments, information, questions, etc.

I have questions

I know I can

Topic			Comment
Locate sections of the EWD			
Hook up and use of a DVOM with an Inductive Ammeter			
Perform the procedure to isolate a parasitic load in a circuit			

Notes

WORKSHEET 3-3
Measuring Resistance

Vehicle	Year/Prod. Date	Engine	Transmission

Worksheet Objectives

At the conclusion of this worksheet, you will be able to access the EWD to locate Connectors, Relays, and Diagnostic Procedures; measure Resistance in a circuit or component; and access and interpret Diagnostic Codes.

Tools and Equipment

- 1998 ES 300 EWD and Repair Manual
- DVOM

Section 1: Front Air Bag Sensor Inspection

1. Check for any diagnostic codes stored in the SRS ECU.
2. Disconnect the battery negative terminal.
3. Locate the Driver's Airbag Assembly Connector
4. Follow the diagnostic procedure for checking the squib circuit.
5. When completed, reconnect Center Airbag Assembly, Airbag Squib, and battery negative terminal. Re check for any trouble codes.

Hint: Use the EWD in conjunction with the Repair Manual to help identify the correct wire colors and terminal locations.

Terminals	Wire color	Measured Resistance	Specifications	OK or Bad
D+ — D				
D+ — Ground				

Section 2: Relays

1. Using the EWD, locate the following relays on the vehicle and determine which terminals are connected to the relay coil. (Some relays may not be found on all models.

2. Using a DVOM, measure the resistance of the relay coil.

Relay	Location	Measured Resistance
Horn Relay		
Headlight Relay		
Heater Relay		
Circuit Opening Relay		

Measuring Resistance

Name: _____ Date: _____

Review this sheet as you are doing the *Measuring Resistance* worksheet. Check each category after viewing the instructor's presentation and completing the worksheet. Ask the instructor if you have questions regarding the topics provided below. Additional space is provided under topic for you to list any other concerns that you would like your instructor to address. The comments section is provided for your personal comments, information, questions, etc.

I have questions

I know I can

Topic			Comment
Locate Diagnostic Procedures in the EWD			
Access and interpret Diagnostic Codes			
Measure Resistance in a circuit or component using a DVOM			

Notes

WORKSHEET 3-4
Measuring Amperage

Vehicle	Year/Prod. Date	Engine	Transmission

Worksheet Objectives

At the conclusion of this worksheet, you will be provided with additional practice to connect and use a DVOM to identify a Parasitic Load in a circuit.

Tools and Equipment

- 1998 ES 300 EWD
- Vehicle
- DVOM

Section 1: Series Type Ammeter—Parasitic Load

Using a DVOM ammeter connected in series to the negative battery cable, measure the current flow under the following conditions:

Measuring Parasitic Load
Connect the Ammeter in Series with the negative battery cable. Connect the leads to the DVOM to measure AMPS instead of milliamps. The initial surge from the vehicle parasitic loads may exceed the momentarily.

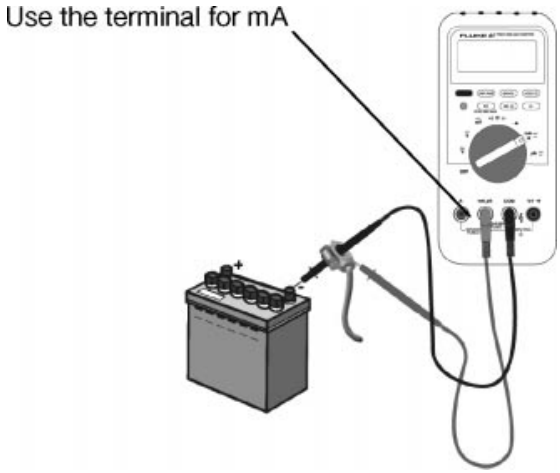

Condition	Amps	Notes
Parasitic Load (initial)		
Parasitic Load (continuous)		

1. Why does the parasitic load “spike” high when the battery is first connected?

_____

_____

_____

2. What is considered a “normal” amount of parasitic load?

_____

3. List examples of components that make up the parasitic load on the battery. Why do these units use battery power continuously?

_____

_____

_____

_____

Section 2: Series Type Ammeter—Electric Fuel Pump

Using the EWD, find Terminals +B and Fp on the Check Connector. Connect the Ammeter in series to measure the amperage in the Fuel Pump Circuit under the following conditions:

Using DVOM Ammeter
Connect the Ammeter in Series Between the +B and Fp terminals of the Check Connector. Connect the leads to the DVOM to measure AMPS.

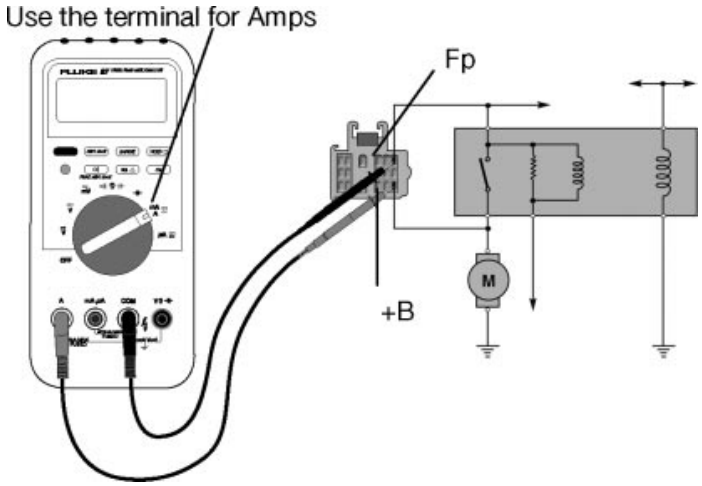

Condition	Amps	Notes
Fuel Pump ON		
Fuel Pump ON (return line restricted)		

CAUTION!
When restricting the Fuel Pump Return line:

- **DO NOT fully “pinch off” the fuel line—excessive fuel pressure can cause the hose clamps to leak gasoline in the engine compartment.**
- **DO NOT use a plier with a serrated edge directly on the rubber hose. Damage to the return hose may occur.**

4. Why was the amperage reading higher when the return line was restricted?

_____

_____

5. How could this information be used in diagnosing a fuel pump (or any electric motor) related problem?

_____

_____

Section 3: Inductive Type Ammeter

Using a DVOM with inductive type ammeter connected to the negative battery cable, measure the current flow with the listed components operating. Then apply parallel circuit current flow principles to calculate the amount of amperage that is used by each individual circuit.

Using an Inductive Ammeter
If using an inductive type ammeter connected to a DVOM, remember that you must set the meter up to measure MILLIVOLTS and not amperage!

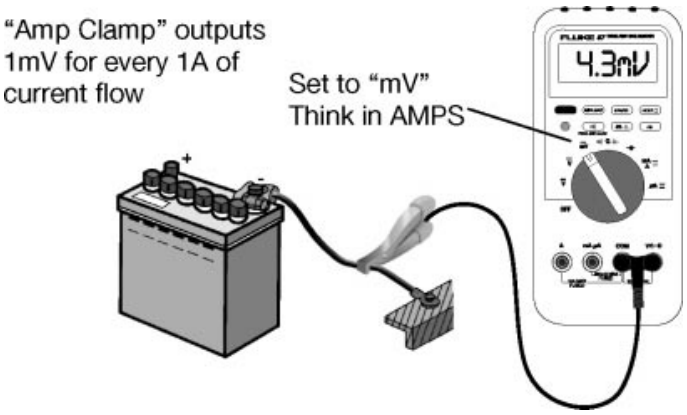

Load	Amperage Measured at Battery	Calculation	Individual Circuit Amperage	Notes
Ignition Switch ON				
Rear Defogger				
Stop Lights				
Headlights				
Radiation Fan (Open Water Temp. Switch)				
Heater - A/C Fan: Low				
Heater - A/C Fan: High				

Notes

Measuring Amperage

Name: _____ Date: _____

Review this sheet as you are doing the *Measuring Amperage* worksheet. Check each category after viewing the instructor's presentation and completing the worksheet. Ask the instructor if you have questions regarding the topics provided below. Additional space is provided under topic for you to list any other concerns that you would like your instructor to address. The comments section is provided for your personal comments, information, questions, etc.

I have questions

I know I can

Topic			Comment
Locate sections of the EWD			
Hook up and use a DVOM with an Inductive Ammeter			
Perform the procedure to isolate a Parasitic Load in a circuit			

Notes

Section 4

Six-Step Troubleshooting Plan

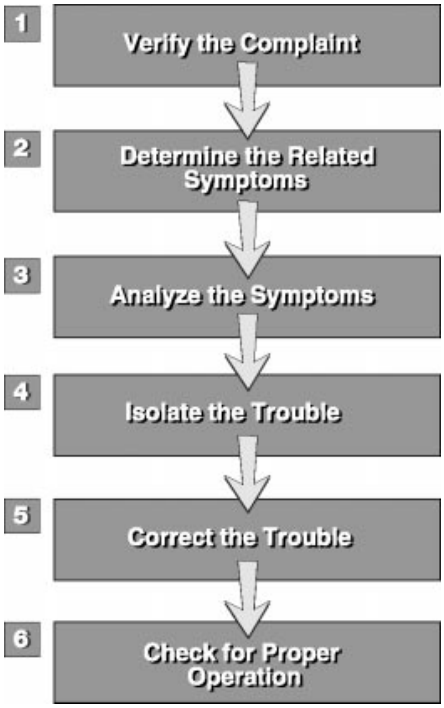

Learning Objectives:

1. Introduce the six-step troubleshooting process.
2. Explain what needs to be done when verifying a problem.
3. Explain all the components of a related symptoms check.
4. Using the circuit tracing technique, show how to analyze the symptoms and define the problem you need to diagnose.
5. Show how to use the EWD when isolating a problem.
6. Explain repair techniques for wires, terminals, and connectors.
7. Perform a practice case study on the Lexus Body Electrical Simulator using the six-step approach.

Notes

Introduction

You have now covered all of the "tools" used when diagnosing electrical problems:

- **Basic electrical concepts**
- **Use of the EWD**
- **Tracing current flow through a system circuit diagram**
- **Use of the DVOM & jumper wires**

Now it's time to put all of these components together to diagnose electrical problems.

The Diagnostic Process

It would be great if we could just walk up to a vehicle and instinctively know where an electrical problem was, and what exactly had to be done to repair it. This happens occasionally when fixing a problem that you have seen a number of times on a particular model. Your experience from repeatedly fixing this problem allows you to make the repairs quickly, with no wasted effort.

But what about problems that you see on only an occasional basis, where there is no "trend" of past failures to help you? To diagnose these types of problems *in the least amount of time*, you need to make your diagnosis following a **six-step troubleshooting plan**.

Six-Step Troubleshooting Plan

In L623, the Six-Step Troubleshooting Plan was introduced. These steps are:

1. **Verify the complaint**
2. **Determine the related symptoms**
3. **Analyze the symptoms**
4. **Isolate the trouble**
5. **Correct the trouble**
6. **Check for proper operation**

By using this troubleshooting plan, you can minimize the amount of time spent diagnosing the circuit by performing only the checks that you **need to make**, with an emphasis on checks that are the **easiest to make**.

Quickly finding and fixing an electrical problem doesn't depend on *luck*, but on your *skills*: applying what you know about circuits, using the EWD, and devising a strategy to isolate the location of the problem. The six-step approach is a way to organize your efforts, keeping you on-track while you are troubleshooting the problem.

Six-Step Troubleshooting Plan

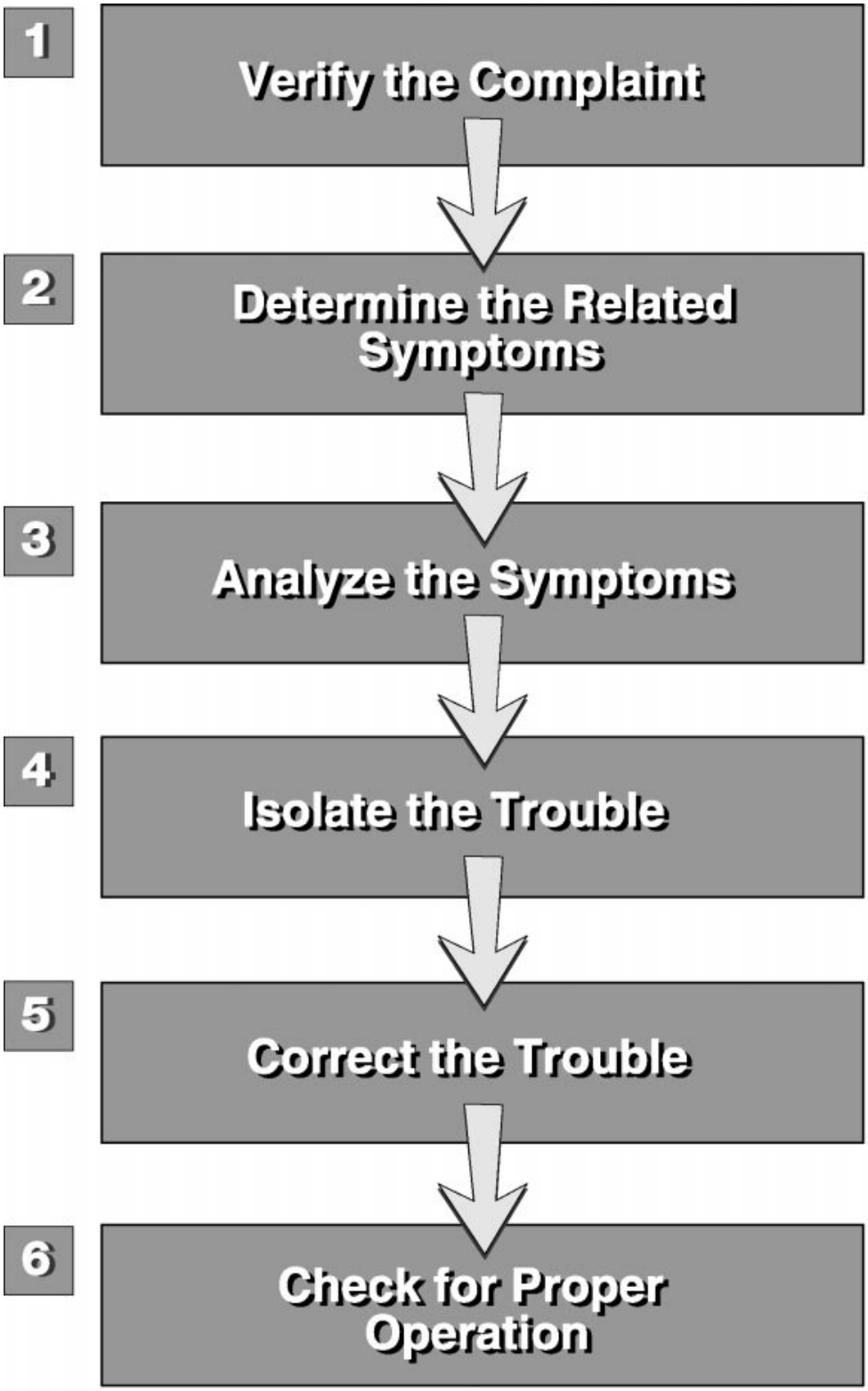

Fig. 4-1
L652f401

Step #1: Verify the Complaint

This is the first step in any diagnostic process. When you are handed a repair order with a customer's complaint on it, there are three things that you must do:

1. You must be able to **identify** the problem the customer noted
2. You must **determine if it is a problem or not**
3. If there is a problem, determine if it is **intermittent or continuous**

Identify the Problem

The average customer is not a "technically oriented" person. When they describe a problem, it's not always going to be easy to understand them, especially if you weren't the person who wrote it on the RO.

Your knowledge about how each system works is very important in recognizing what the customer is talking about. If you don't know how a system is supposed to operate when it's OK, you **won't** know when it is broken. Because of the number of systems/circuits on the vehicle and the increased use of ECU-type controls in them, it is becoming more difficult to keep up with the details on how all the systems, model to model, operate.

The best places to look for information on how a system should operate are the **System Outline** in the EWD and the **Owner's Manual**.

Verify the Complaint

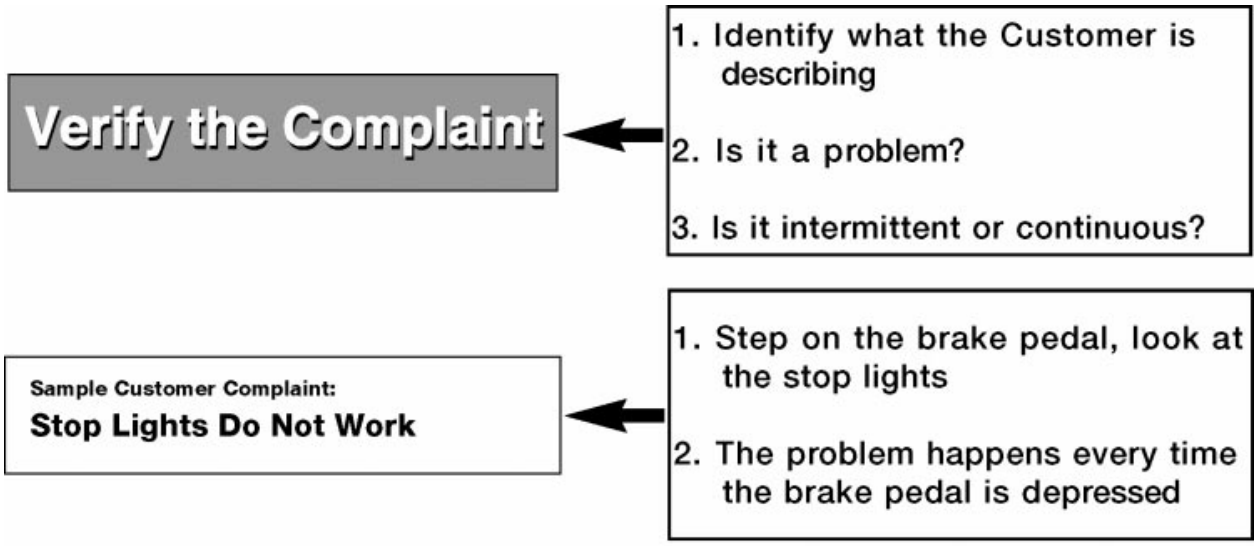

Fig. 4-2
L652I402

Does a Problem Exist?

Sometimes what seems like a problem to a customer is actually a normal function of the circuit. For example, the customer complaint could be about the power door locks: “When the key is in the ignition, with the door open, the power door locks won’t lock.”

A condition such as this is not a problem, but a normal function of the Power Door Lock ECU and its “key confine” feature which is designed to prevent the customer from locking their keys in the car. For the customer, information about the operation on all the electrical systems on the vehicle can be found in the **Owner’s Manual**. For you, detailed information about the operation of different electrical systems can be found in the **EWD**, as well as in the **Repair Manual Body Electrical section**.

There are also instances where the customer is noticing *a characteristic of the vehicle*. There are no “fixes” for these non-problems. The best way to identify this type of condition is to compare the customer’s vehicle to a known good vehicle.

Use the Owner’s Manual as a Reference

Like the EWD system outline, the Owner’s Manual is a good resource for information on how different systems or circuits are supposed to operate.

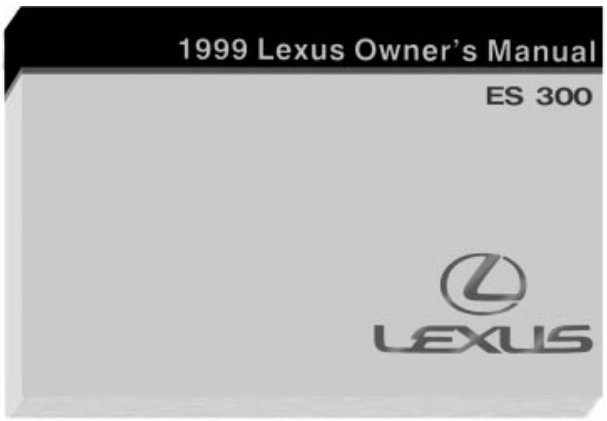

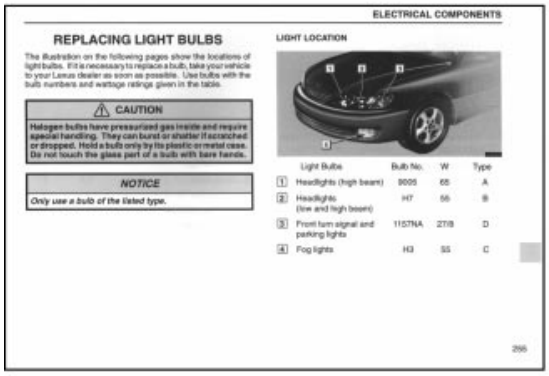

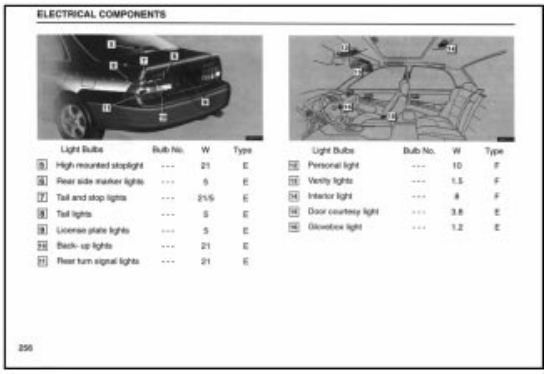

Fig. 4-3
L652f403

Intermittent or Continuous?

When verifying the problem, you must also determine if the problem is *continuous* or *intermittent*. If the problem is **continuous** (or not intermittent), it should be fairly obvious when you operate the suspect system.

Intermittent problems can be more difficult to find. If the problem is intermittent, you'll need to know as much information as possible (from the ASM or customer directly) about the **conditions** that were present when the problem occurred for the customer.

For example, electrical problems can be triggered by ambient temperature, vibrations from road conditions, weather, or the type of driving (only on turns, hills, etc.) How the customer actually **operates** the system can also be a factor.

If the conditions are repeated and the problem does not re-occur, make a thorough visual inspection of the harness, connectors, and terminals, with attention to the *terminal spread*. Simulate the vibrations that are caused during driving by "wiggling" harnesses and connectors. Keep in mind that as you move the harnesses or disconnect connectors, you may cause the problem to **temporarily** "fix" itself. While making your inspections, try to minimize these "changes" to the circuit, and keep track of which harnesses or connectors you have disconnected or moved. Although it will be difficult in some cases, be sure to **identify exactly what is causing the problem**, and **NEVER** consider the vehicle's problem solved if it happens to "magically fix itself".

Intermittent Problem Simulation

Try to simulate the conditions under which the problem occurred. The ES 300 Repair Manual, has a Troubleshooting Section which was introduced to assist in diagnosing problems with ECU controlled systems.

1 VIBRATION METHOD: When vibration seems to be the major cause.

CONNECTORS

Slightly shake the connector vertically and horizontally.

WIRE HARNESS

Slightly shake the wire harness vertically and horizontally. The connector joint, fulcrum of the vibration, and body through portion are the major areas to be checked thoroughly.

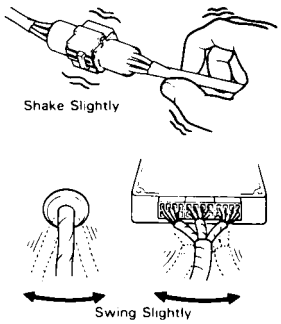

PARTS AND SENSORS

Apply slight vibration with a finger to the part of the sensor considered to be the problem cause and check if the malfunction occurs.

HINT: Applying strong vibration to relays may result in open relays.

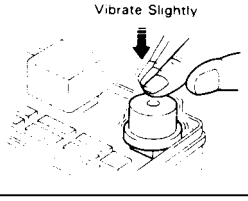

Fig. 4-4
L652f404

In general, you cannot make an accurate diagnosis or repair of a problem you cannot duplicate. If the situation warrants it, **call Technical Assistance** to see if there have been any other reported cases of the problem or for advice on how to proceed with the vehicle.

Step #2: Determine the Related Symptoms

Now that you have verified that *there is a problem*, you need to examine the problem symptoms more thoroughly. The r**elated symptoms check** is basically an **operational check**, so you won't need any tools except for the EWD. The major goal of this check is to determine:

1. **How much** of the circuit is affected.
2. **Find clues to the location of the problem** by operating other circuits related or connected to the problem area.

To say "determine the related symptoms" sounds complex, but this is one of the most important and **time saving** steps you can make in the diagnostic process.

How a Circuit is "Related"

In this step, you need to operate the problem circuit thoroughly, noting **exactly what is and what is not working**. Based upon your observations, make checks to *the related circuits*. Circuits are **related** to another circuit because of a parallel connection:

- Most electrical circuits consist of **two or more loads** that are connected in parallel.
- Entirely different circuits are *related* to another circuit by a parallel connection to **common power sources (fuses) or ground points**.
- **Shared sensor or switch functions** in which a single switch operates a number of different circuits (such as the LH front door courtesy switch operating both the interior lighting and key warning buzzer circuits).

How Circuits are Related

Circuits are related through shared fuse/power connections, and through splices on the +B or ground side of the component.

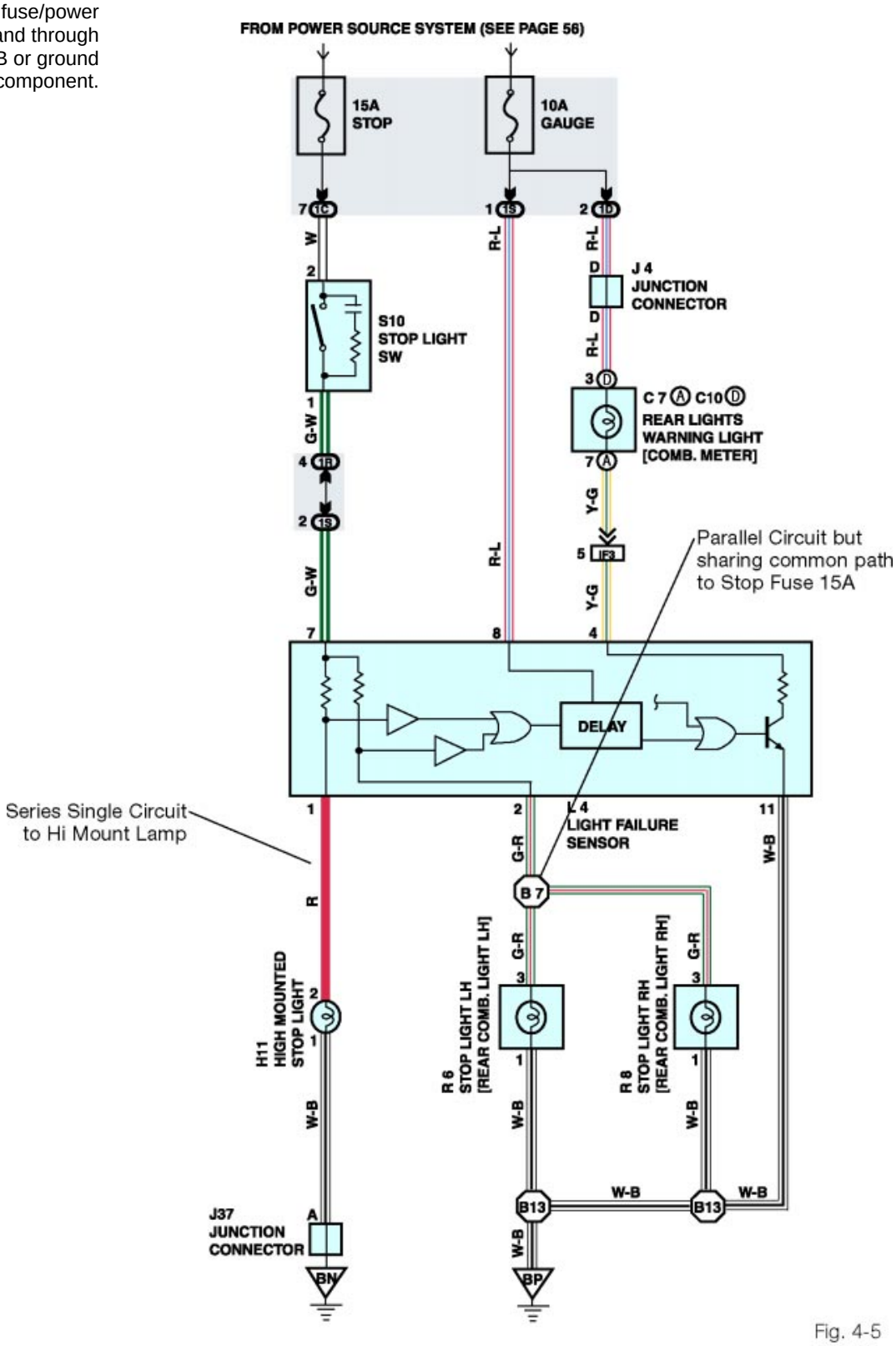

Fig. 4-5
L652I405

How Much of the Circuit is Affected?

In order to know what loads or other circuits are related, you'll need to look in the EWD *System Circuit Diagram*. The wiring diagram will tell you what loads are connected in a particular circuit, and how they are switched. *Section H Power Source (Current Flow Chart)*, as well as the power source system diagram, will give you "+B side" circuit information. For ground point information, S*ection J* diagrams all of the splices on the ground side of the circuits.

By checking the operation of related circuits, you will be eliminating parts of the circuit or components as the possible problem causes. With fewer items that need to be checked, you'll spend less time isolating the location of the problem.

While operating the circuit, you need to determine if the problem affects all of the circuit or just part of it. Based upon how the circuit operates, you can make some assumptions:

If Entire Circuit is Inoperative

If the entire circuit system is "dead", this indicates that:

- There is a possible problem with a power (fuse) or ground circuit.
- The load or component is bad.

There are a large number of problems that could cause a component not to work, from an open power wire or ground wire, to a simple bad component. Because of this, you need a place to start your inspection. To begin, the easiest inspection to make would be to **check the power and ground of the component** by operating related circuits. By using the EWD, making a quick check of both power and ground is simple:

- **Checking Power:** Look at the system circuit diagram and *Section H, Power Source Current Flow Chart* to determine other circuits which share the fuse and check their operation. Even if the fuse is not shared by another circuit, simply locating and inspecting the fuse can be done quickly.
- **Checking Ground:** Operating a "shared" circuit also provides a quick check of the ground circuit. By using the *Section J, Ground Point information* in the EWD, you can find out if another circuit uses the same ground point. If a circuit which shares the ground works OK, you'll know that the ground point is OK.

Neither of these checks isolates the exact location of the circuit problem. But they can quickly point to the areas you need to check and save you from making a lot of unnecessary inspections.

Check for Possible Fuse or Ground Problem

If the whole circuit is inoperative, operate another circuit which uses the same fuse. Then operate another circuit that uses the same ground point.

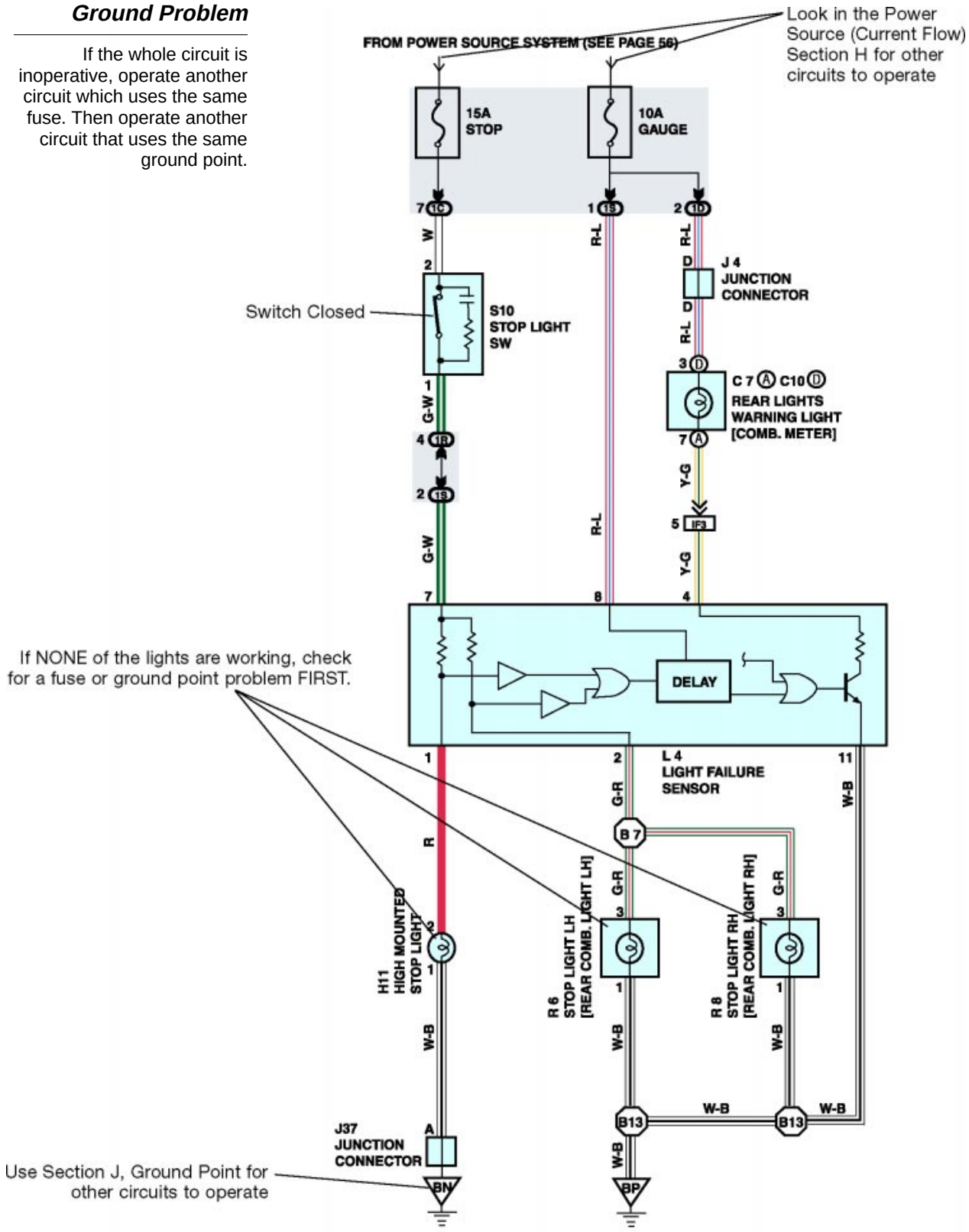

Fig. 4-6
L652f406

If Any Part of the Circuit Works

If any part of the circuit still works:

- You know that the power to the circuit and the main ground point are probably OK.
- You need to find out exactly which loads are working and which are not. This will let you look for common wiring or connections between the “bad” parts of the circuit.

If any part of the problem circuit works, it is extremely important to **determine exactly which parts are working and which parts are not**. This step will save you from making unnecessary checks to parts of the circuit that are OK.

For example, the customer complaint is that the stop lights do not work. As you step on the brake, you notice that the high mount stop light works. Knowing this verifies that a large portion of the circuit is OK. By eliminating parts of the circuit that are OK, the number of places you need to check is reduced. This is what checking the related symptoms is all about.

Eliminate Parts of the Circuit

If one or more of the stop lights work, you know that the fuse , the grounds, and part of the wiring are OK.

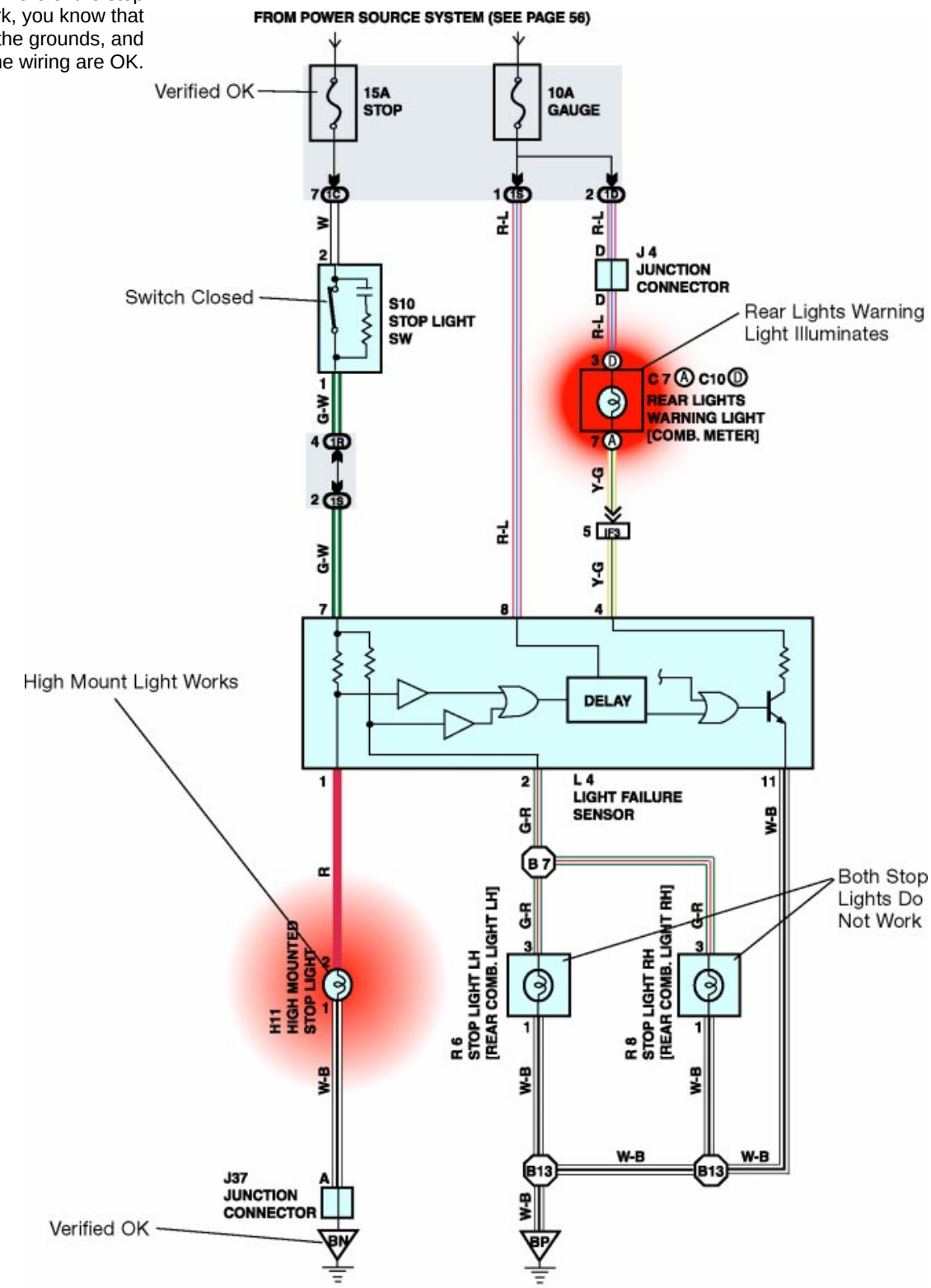

Fig. 4-7
L652f407

Circuits with Self-Diagnostics

When working on a system that has **self-diagnostic capability**, the **New Car Features (NCF) book and the Repair Manual (RM)** are the only places to find information about how to access the *Diagnostic Trouble Codes*, and what each individual code means. The RM also contains specific diagnostic procedures for each circuit, including a table to direct you in diagnosing problems that do not set trouble codes. Because the method for accessing the codes varies from system to system, you'll need to turn to the specific RM section for each of these systems.

In these circuits, the EWD is best used *in conjunction with* the RM and NCF. It's location tables and color wiring diagrams provide a good supplement to the RM information.

Use the Repair Manual for Systems with Self-Diagnostics

The RM is the first place to look when working with these systems. The EWD is helpful, especially with the color wiring diagrams, and location information.

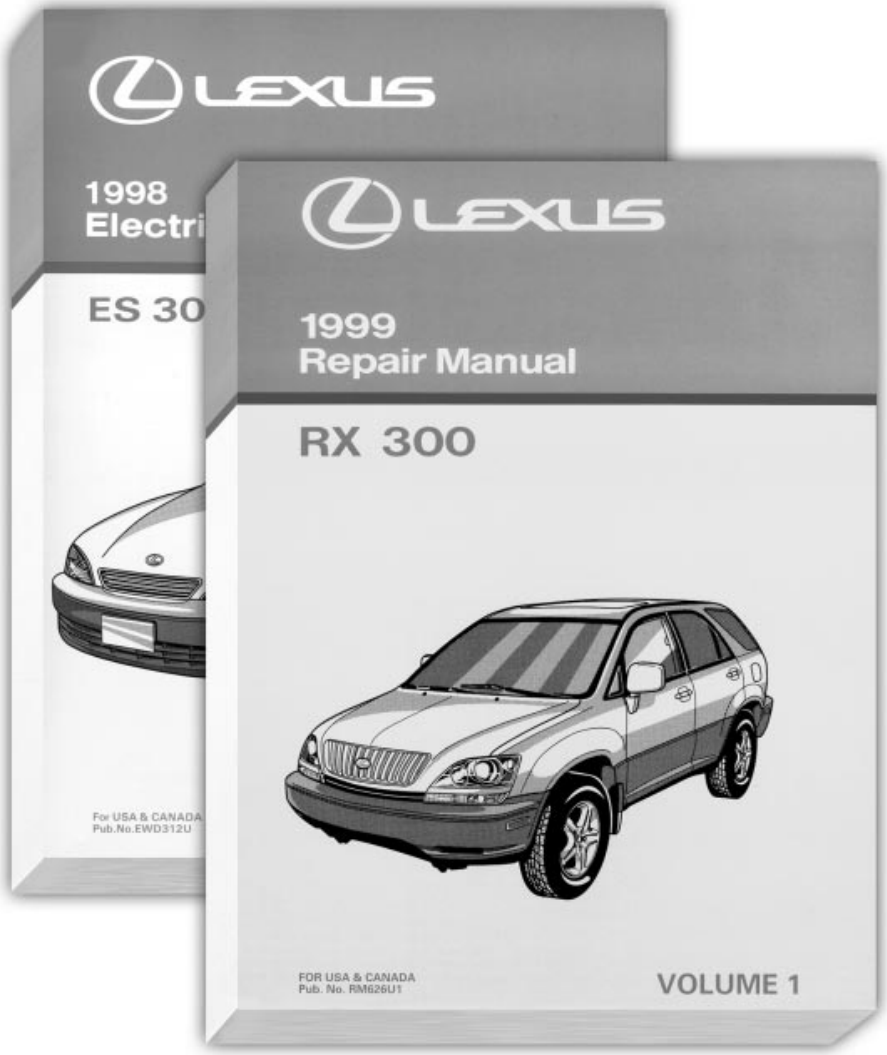

Fig. 4-8
L652f408

Diagnosing with DTCs

If the circuit has an ECU with self-diagnostic ability, the general diagnostic strategy is to:

1. Always check for **Diagnostic Trouble Codes (DTC)** first, and write them down. Point any Freeze Frame data for reference.
2. Clear the code memory and operate the system/vehicle to see if the problem is intermittent or continuous.
3. If the trouble code(s) reappear, follow the diagnostic tables in the RM.
4. If there are no codes, but **there is a problem present**, use the Problem Symptoms Table in the repair manual to direct you to the proper inspections.
5. While diagnosing the circuit, **use the EWD to help you locate the components, pins, connectors, or splices**.

There are other techniques that you can use depending on the system you are diagnosing. This additional information on ECU system diagnosis is covered in L672.

Diagnostic Trouble Codes (DTCs)

DTCs are used in many body electrical systems including Cruise Control, Anti-lock Brakes, Airbag, and Engine Control Systems

DTC of the speed sensor check function:

Code No.	Diagnosis	Trouble Area
71	Low output voltage of right front speed sensor	• Right front speed sensor • Sensor installation • Right front speed sensor rotor
72	Low output voltage of left front speed sensor	• Left front speed sensor • Sensor installation • Left front speed sensor rotor
73	Low output voltage of right rear speed sensor	• Right rear speed sensor • Sensor installation • Right rear speed sensor rotor
74	Low output voltage of left rear speed sensor	• Left rear speed sensor • Sensor installation • Left rear speed sensor rotor
75	Abnormal change in output voltage of right front speed sensor	• Right front speed sensor rotor
76	Abnormal change in output voltage of left front speed sensor	• Left front speed sensor rotor
77	Abnormal change in output voltage of right rear speed sensor	• Right rear speed sensor rotor
78	Abnormal change in output voltage of left rear speed sensor	• Left rear speed sensor rotor

Fig. 4-9
L652f409

Step #3: Analyze the Symptoms

In order to fix the problem, you need to know *exactly* what problem you're dealing with. When verifying the problem, you were able to get a better understanding of the customer's complaint. After making the related symptoms checks, you may have found other circuits that are or are not affected.

At this point, you need to stop, and put all of this information together to **specifically define**:

- **Exactly which components/circuits are affected** (both the customer's complaint and any related symptoms)
- **What** kind of problem you need to look for (open, short-to-ground, high resistance, feedback)
- **When** it occurs (what operating conditions: key ON, driver's door open, etc.)

After doing this, go to the System Circuit Diagram (or a photocopy of the diagram if possible), and **trace the current flow paths** in the parts of the circuit that are **confirmed as working**. By tracing the current flow paths, you will have a visual reference of areas of the circuit *you don't need to check*. Areas that you have NOT traced are all places that a possible problem could exist. All of this up-front work will have a payoff: Less time spent making checks on the car!

Trace the Paths of Current Flow

The shaded areas indicate where the circuit is OK. Tracing current flow here is the same as you did earlier in the course.

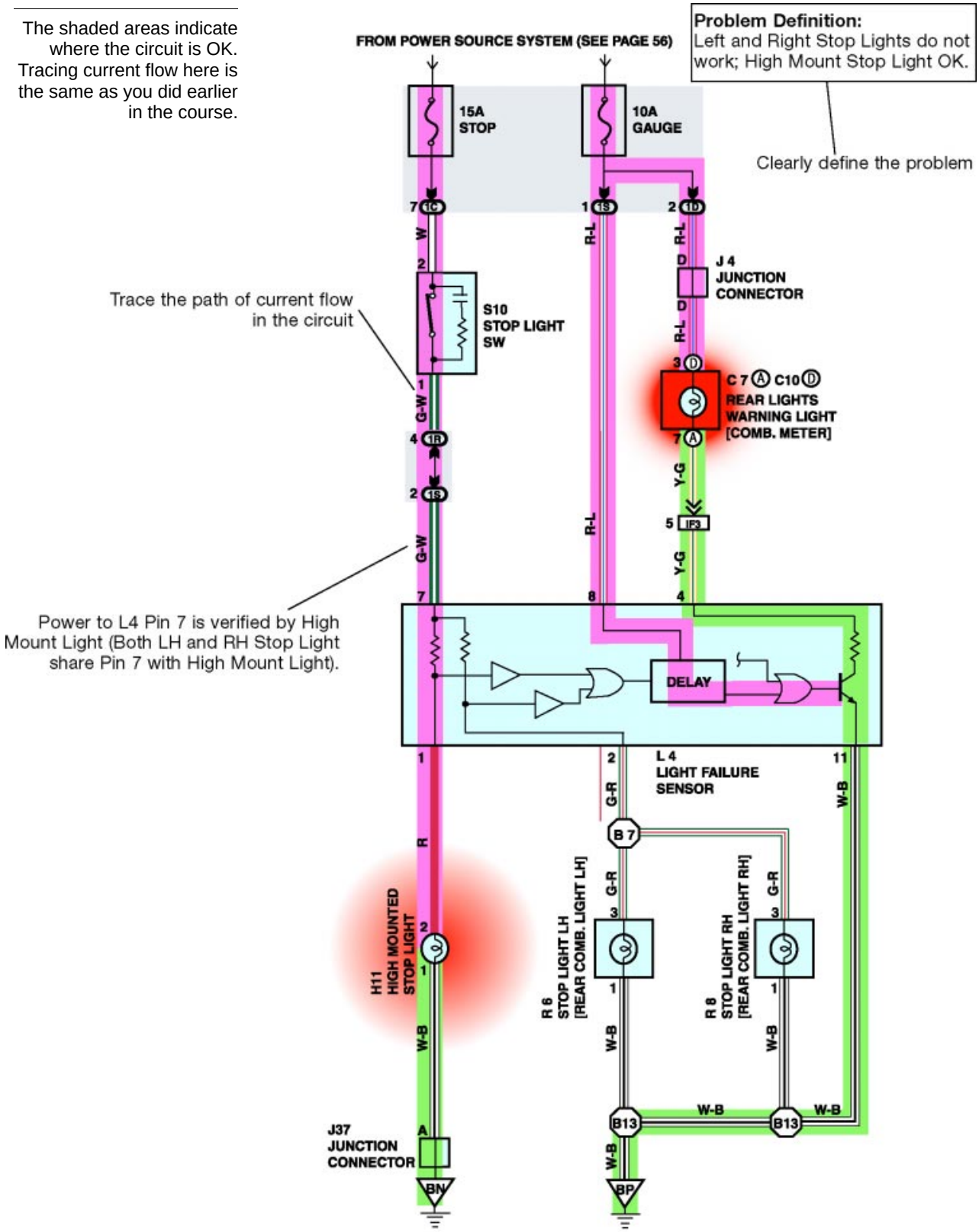

Fig. 4-10
L652f410

Step #4: Isolate the Problem

To **isolate the problem**, there are three actions you need to make:

1. On the wiring diagram, find the areas that are **possible problem areas**
2. Determine **where to begin** making the checks
3. **Make your inspections.**

Find the Possible Problem Areas

When analyzing the symptoms in **step 4**, you traced the paths of current flow in the parts of the circuit that were "good". You'll now see sections of the circuit that have NO tracing on it, places where there is NO *confirmed* current flow. **Anywhere you have not traced current flow is a potential problem area.** If you are working with a photocopy of the diagram, **circle all of the locations** where the problem could possibly be. This gives you a good visual reference as to the places you'll potentially need to check.

Where to Begin

Since any ONE of these locations you circled could be the cause of the problem, you'll need to find a place to start. In general, the order you should inspect the potential problems is based upon:

- How **easy** it is to get to the component
- If the inspection can be done **visually**
- If there is a known history of **failures** at a particular point
- If **multiple components/circuits** are inoperative: Start with parts of the circuit that are common to both (as opposed to looking for 2 separate problems).

The inspection process involves the use of all of the tools we discussed in Section 3 (visual, DVOM, or jumper wire). Make a mental plan of at least the first two initial checks you need to make. If these initial checks do not find the cause of the problem, they will at least lead you into making the *additional* checks to the circuit which will isolate the problem. **Remember that the location of the problem will be in one of the areas you circled on the wiring diagram.**

The Split-Half Method

If the accessibility of the circuit is good, you can also apply the *split-half method*. Applying the *split-half method* to the wiring diagram, you would locate the *middle* of the "bad" part of the circuit. After you find the connector nearest to that point, you would determine which half (+B side or ground side) of the circuit is "bad" by making an open circuit voltage or continuity check. Once that is determined, you would go to a connection in the middle of that "bad" section of the circuit, and again determine which half of the circuit has a problem. You continue to split the problem section of the circuit in half, until the actual problem is isolated.

NOTE

Whether you apply the split-half method to isolate the problem, or simply follow the System Circuit Schematic, checking the items that are most accessible first, you are still **applying a process of elimination**. And that really is the heart of the diagnostic process.

There are specific techniques that you can use to isolate open circuits, short-to-grounds, parasitic loads, and high resistance problems. These techniques will be discussed in Section 5 of this handbook.

Circle the Possible Problem Areas

Since the problem affects both bulbs, you would concentrate on the area that is in parallel to both. You could still have more than one problem which affect each bulb separately, but the odds would be in your favor.

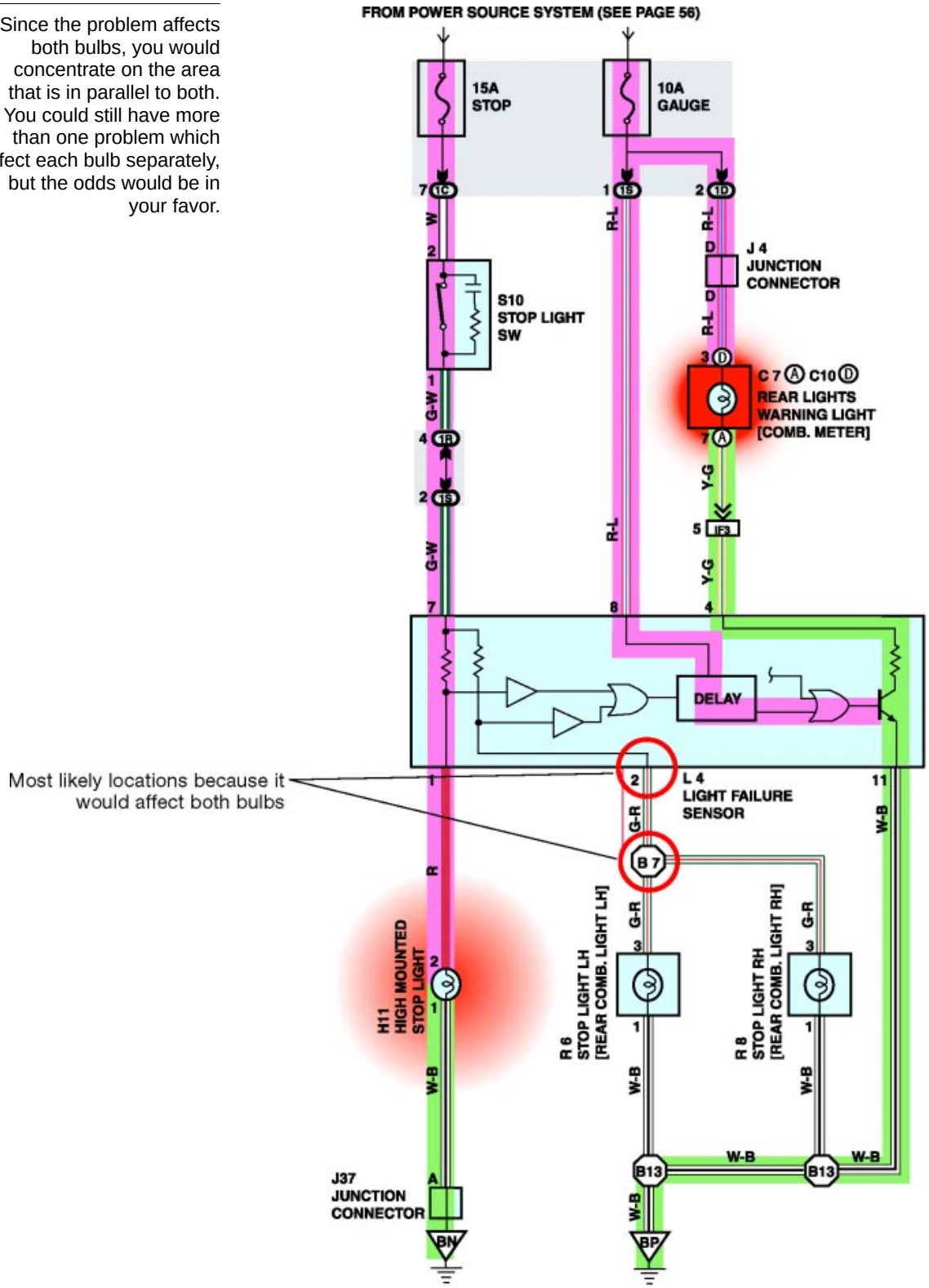

Fig. 4-11
L652I411

Where to Start Your Diagnosis

Use the component location information in the EWD to determine where to make your inspections, and which is the easiest to get to.

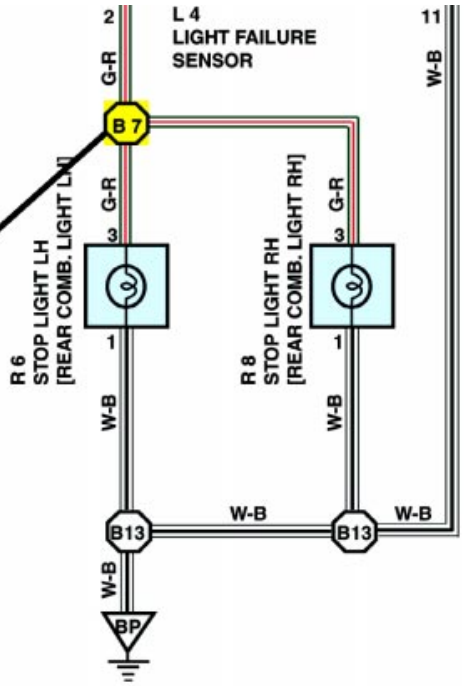

: SPLICE POINTS

Code	See Page	Wire Harness with Splice Points	Code	See Page	Wire Harness with Splice Points
B7	40	Floor Wire	B13	40	Floor Wire

: Location of Splice Points

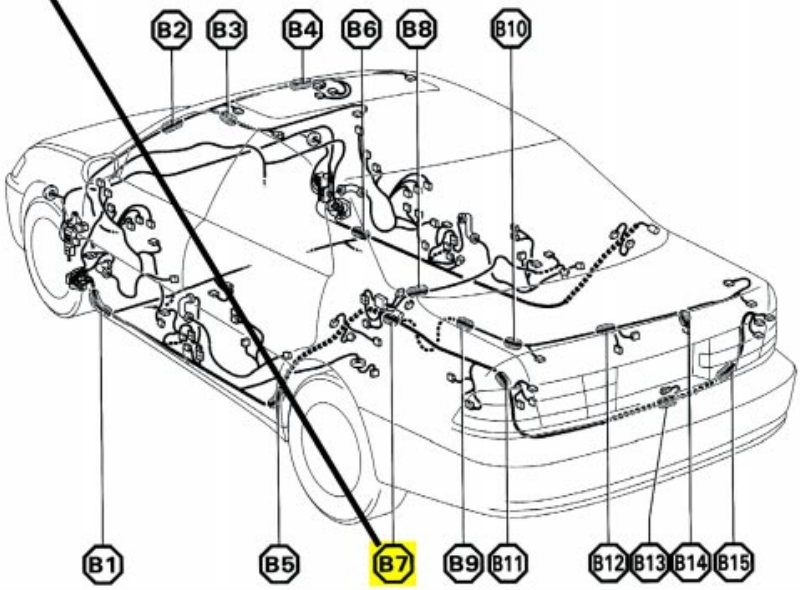

Fig. 4-12
L6521412

Step #5: Correct the Trouble

Correcting the trouble is probably the most straightforward step in the diagnostic process. Making the repair to an electrical problem will always involve:

- Repair or replacement of a component
- Wiring repair
- Service to a circuit connection
  - Connectors
  - Terminals
  - Ground point

Component Service Hints

- When disconnecting and replacing components, make sure that the circuit is off or the battery is disconnected.
- Certain circuits require special handling. The air bag system for example requires you to disconnect the battery and **wait up to 90 seconds before servicing the system**. **Always refer to the Repair Manual for special service precautions.**
- If the battery needs to be disconnected, write down the customer's radio station "pre-sets". Reprogram the stations and reset the clock after reconnecting the battery.

Wire Repair

For any wiring, connector, or terminal repair, your best resource is the **Lexus Wire Harness Repair SST** (p/n 00002-04201-02). This kit contains an assortment of replacement terminals, wire, tools, and supplies that you will need to perform wire harness repairs. Also, the wire repair manual, provided with the kit, has charts for terminal and connector ID/part numbers, and complete instructions on how to make wire, terminal, and connector repairs.

HINT

- Cuts in the insulation should be wrapped with silicon tape (supplied in the Wire Repair SST) or covered with heat-shrink tubing. Be sure to overlap the repair by about 1/2 inch on either side.
- If the damaged wire needs replacement, make sure the same or larger diameter is used. Also, try to use the same wire color. When removing the wire insulation, be careful not to break or nick the wire strands.
- When splicing wires, make sure the circuit is OFF.

Wire Repair Manual

The wire repair manual contains charts for terminal and connector ID, and instructions for making repairs. The terminals are listed by component that they are used with for easy reference.

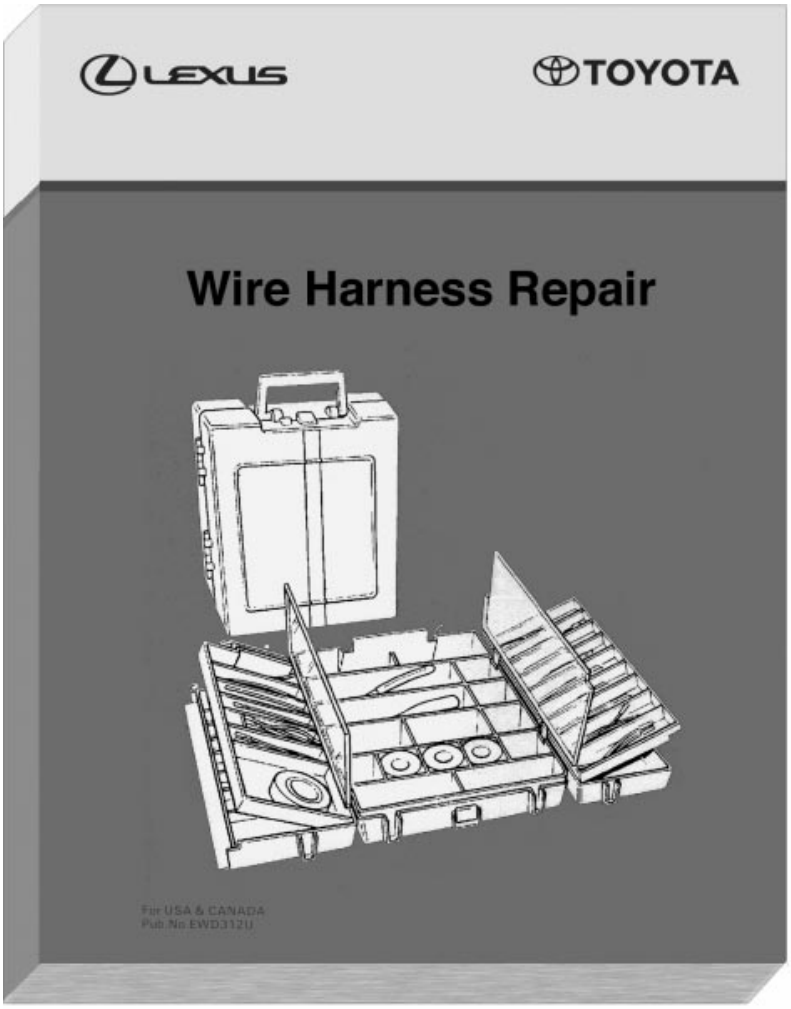

Fig. 4-13
L652f413

Step #6: Check for Proper Operation

After making the repair, you must always **verify** that the problem was actually fixed. Operate the circuit as thoroughly as you did when you first looked at the car, making sure all of the functions and features of the circuit are working properly. Sometimes, a circuit has *multiple* problems which are causing it to be inoperative. This re-check of the circuit ensures that the customer will be satisfied. A satisfied customer means that he or she will return to your dealership for service, and tell their friends about their service experience, too.

For the rest of this course, you will be using a worksheet that incorporates all of the six steps that we have talked about. Fill these worksheets in as you go through the diagnostic case studies that you'll do on the Simulator as a class or on the cars in the lab when you work in small groups.

Notes

WORKSHEET 4-1
Six-Step Troubleshooting Plan—Radiator Fan Circuit

Vehicle	Year/Prod. Date	Engine	Transmission

Worksheet Objectives

The repair order states that the **Radiator and Condenser Fans are both ON at HIGH speed at all times in a 1998 ES 300.** Using the EWD, fill in the blanks in your workbook

Tools and Equipment

- 1998 ES 300 EWD

Step 1: Verify the symptoms

1. Using the Table of Contents, find the page for the Radiator Fan System Circuit Diagram. What is the page number?

   _____

2. Turn to the diagram. Make a copy of the page, or get one from the instructor.

3. To understand how the system operates, read the **System** Outline section that follows the wiring diagram.

Step 2: Determine the Related Symptoms

1. In looking for related symptoms, you notice that the fans cycle High Speed OFF/High Speed OFF.

2. By reviewing the System Outline #2 (High Speed Operation) , you know that only when the A/C single pressure SW or the Water temp. SW No. 1 are **OFF**, do the Radiator and Condenser fans both go into High Speed mode. Where does the current flow when it leaves the RDI fuse?

   _____

3. Using a highlighter trace this path of current flow.

4. According to your observations what relay must close to provide power to fuse RDI and CDS.

   _____

5. When does this occur?

   _____

6. Since both fan motors are running in HIGH is it probable that fuse ECU-IG is OK?

   _____

Step 3: Analyze the Symptoms

1. Using the **System Circuit Diagram and a highlighter**, trace the paths of current flow in the parts of the **High Speed** circuit that you can confirm are working. Use only one color for this trace. The **System Outline #2** for this circuit tells you where to trace. Keep in mind that Fan No. 1 Relay must have a ground on the coil side to operate. Does it?

   _____

2. Does Fan Relay No. 2 have a ground?

   _____

3. Is it also likely that ground EC is OK since both of these fans operate?

   _____

4. The trace has been started for you on the High Speed Circuit:

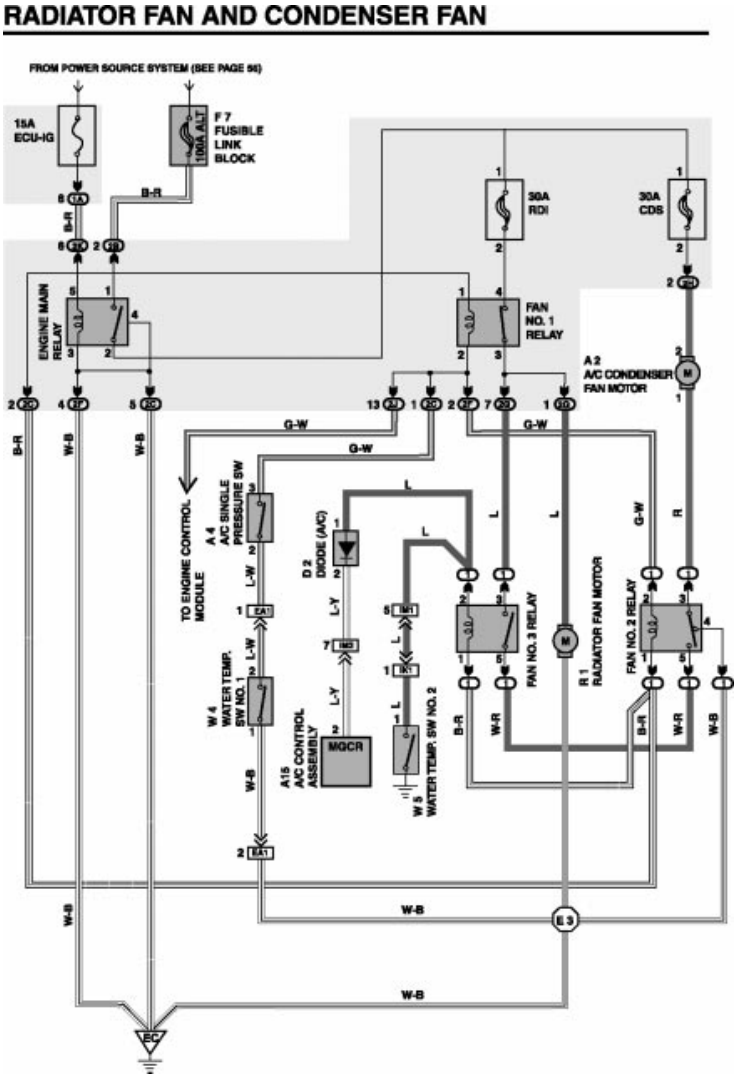

Step 4: Isolate the Trouble

1. On the same copy of the wiring diagram but using a different color marker highlight the current flow for Low Speed Operation.

2. Once you have completed the tracing of these circuits, there are a limited number of locations for this trouble. Essentially, the trouble in the **Low Speed** circuit must be located in an area where the **High Speed** current **does not** flow.

3. Circle the possible points where this problem might be located on your diagram.

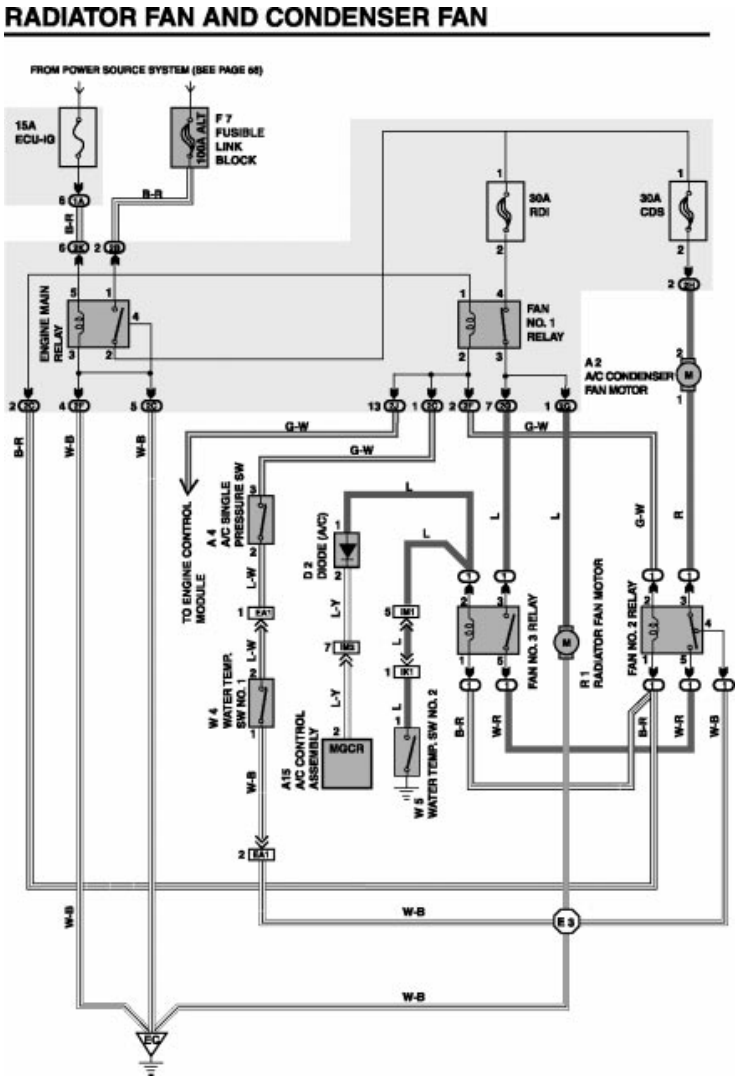

4. Based upon the circuit problem and the EWD information, you decide to check **W5**, the water temperature switch No. 2. Again, the **Component Location** table tells you the location of the sensor, and refers you to a page in **Section G, Electrical Wiring Routing** in this case page 27. The diagram on that page shows you where the sensor connector is located.

   Where is the sensor located?

5. For additional help, the connector diagram for **W5** shows that it is a **one pin connector made of gray plastic.**

W5 GRAY

6. On what page number is the above information found?

_____

7. Looking at the Wiring Diagram, list the components and connectors that may need to be checked:

   1. _____
   2. _____
   3. _____
   4. _____
   5. _____
   6. _____
   7. _____

8. Since the conditions for Low Speed operation are A/C System activated **or** Water Temp. SW No. 2 “ON” we can look at the EWD diagram and know that either of these conditions will provide a ground for low speed operation. If we turn the A/C system “ON” and have low speed operation then we know that side of the ground circuit is OK.

9. What could we do to check the Water Temp. SW No. 2 that would be fairly easy?

_____

10. Let’s assume that we have turned on the A/C with no results and that we have grounded the Water Temp. SW No. 2 also with no results.

11. Where can we go next to save time and still be working in a logical manner?

_____

12. We could check connectors IM2 or IK1 or IM1 or even the diode at D2 however we should be looking at the circuit diagram and asking: “What location in this circuit is the next easiest thing to check?”

13. What color is the wire that carries current to the relay coil just before our grounding points at A15 or W5?

_____

14. If we check for current at Pin 1 of that relay and have current, and then jump pins 3/5 of that connector and have low fan speed where is our problem?

_____

15. What other possible solutions might be available before removing any panels?

_____

_____

Step 5: Correct the Trouble

1. If you need information on making the repair, or removal of a terminal from a connector, refer to **Section C, Troubleshooting**.

Step 6: Retest the system

1. Check the system operation, verifying that it operates according to the System Outline.

In the following exercises you will become more familiar with the EWD and its usage. As you have already seen current flow can take a number of pathways to ground and often the engineers who design the systems will take advantage of electrical principles in order to do more with less. In the previous exercise two single speed blower motors were made to run on high and low speeds by using electrical principles.

Specifically, by manipulating the series and parallel circuit principles two different speeds were accomplished.

Here’s the bottom line on resolving electrical problems. We trace circuits to save time...not to waste it. It is very important to know how the current is supposed to behave in a given circuit. Once we know that behavior and what we actually do or do not have in the way of performance....we can then begin to diagnose the condition. Better to have a couple of copies of the circuit on the bench with a marking pen or two as opposed to an LX 470 spread across three stalls.

Notes

Six-Step Troubleshooting Plan—Radiator Fan Circuit

Name: _____ Date: _____

Review this sheet as you are doing the *Six-Step Troubleshooting Plan—Radiator Fan Circuit* worksheet. Check each category after viewing the instructor's presentation and completing the worksheet. Ask the instructor if you have questions regarding the topics provided below. Additional space is provided under topic for you to list any other concerns that you would like your instructor to address. The comments section is provided for your personal comments, information, questions, etc.

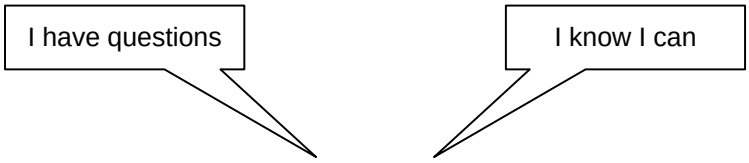

Topic			Comment
Verifying the symptom.			
Determining related symptoms.			
Analyzing the symptoms.			
Isolating the trouble.			
Correction of the trouble.			
Rechecking the system.			

Notes

Section 5

Diagnosing Body Electrical Problems

Circuit	Junction Block Connectors				Junction Connectors	
					ID #	PIN
Automatic Light Control	12 (2J)	1 (1W)	8 (1G)		J5	A
Clock	12 (2J)	1 (1W)	8 (1G)		J5/J6	A/B
DRL Relay	12 (2J)	1 (1W)	7 (1V)			
Ignition Key Cyl	12 (2J)	1 (1W)	2 (1M)		J15	A
Luggage Comp. Light	12 (2J)	1 (1W)	9 (1S)			
Vanity Light RH	12 (2J)	1 (1W)	5 (1F)			

Learning Objectives:

1. Examine the diagnostic strategies for:
   - Open Circuit Problems
   - High Resistance Problems
   - Unwanted Parasitic Load Problems
   - Short-to-ground Problems
   - Feedback Problems
2. Look at the advantages and disadvantages each diagnostic tool has when isolating a particular circuit problem.
3. Show how to apply the DVOM, jumper wire, and EWD in the diagnostic process for each circuit.
4. Perform practice case studies and on-car diagnosis worksheets for each type of circuit problem.

Notes

Introduction

In step #3 of the six-step troubleshooting plan, you analyzed all the symptoms that were confirmed through your preliminary checks. Based upon these symptoms, you could make a conclusion as to the *type* of electrical problem that the circuit has:

- An open circuit
- A high resistance problem
- An unwanted parasitic load or short-to-ground
- A feedback from another circuit

Diagnosing Open Circuit Problems

In this section, we will concentrate on *diagnostic strategies and techniques* that should be used to isolate each of these problems. You'll find that using the "right" tool for each type of problem will save you a lot of time when working to pinpoint location of the circuit problem.

Of all the types of electrical problems, **open circuit** problems are the most common. Open circuits are typically caused by:

1. Disconnected connectors
2. Bad switches
3. Poor terminal contacts
4. Cut wires
5. Blown or defective fuses

You can assume that you have an **open circuit problem** whenever there is no visible sign of operation. You can use a number of tools to find the location of an open circuit. Each of the tools has its advantages and disadvantages, so it's probably best to use a combination of the three, depending on the situation.

Using a Voltmeter on Open Circuit Problems

An open circuit voltage test (positive probe at terminal, negative probe connected to a known good ground) will verify continuity in the circuit to the +B source. If the negative probe of the meter is grounded through the ground wire of the circuit (meter is connected in *series* to the circuit), it will verify continuity of the ground side as well.

1. Use the EWD to determine where to make the checks and if any switches/relays need to be closed.
2. Connect the **negative probe of the voltmeter to ground**, and use the **positive probe to check the various pin voltages** with the circuit ON. Remember that the EWD **will not** tell you how much voltage you should have at *every* pin in the circuit. You need to apply your knowledge about circuits to determine what the correct voltage should be.

NOTE

- Inspect the connectors/locations that are the easiest access, then check the harder ones, if necessary.
- Keep in mind that even if your voltmeter indicates near battery voltage at a terminal, it tells you only that **there is a connection between +B and the inspection point**, and **not how good the connection is**. With high circuit resistance, the open circuit voltage would stay about the same. The only way to detect this resistance would be to measure for a voltage drop around the load or the suspect area of the circuit or to check the resistance with an ohmmeter.

Voltmeter Advantages and Disadvantages

Advantage: Easy to use, cannot cause circuit/fuse damage

Disadvantage: Cannot detect a high resistance problem with open circuit voltage check; would have to disconnect the ground point to check the continuity of the ground side wiring. (It would probably be easier to use an ohmmeter to check the ground side.)

Using the Voltmeter for Open Circuits

If the Headlight Relay did not work, you could check Connector 2E/pin 1 and pin 3 of the Integration Relay for voltage. This would verify that there is continuity from +B through 2F/pin 2 , and the relay coil. It would not detect a high resistance problem. By measuring from pin 13 and pin 11 of the Combination Switch, you can check the continuity of both the power and ground side of the switch in one measurement. The measurements shown would indicate a problem with the Combination Switch.

Voltmeter in parallel to the switch; Should be 0V when the switch is CLOSED. 12V reading indicates switch is OPEN. (+B continuity to pin 13, continuity to ground at pin 11)

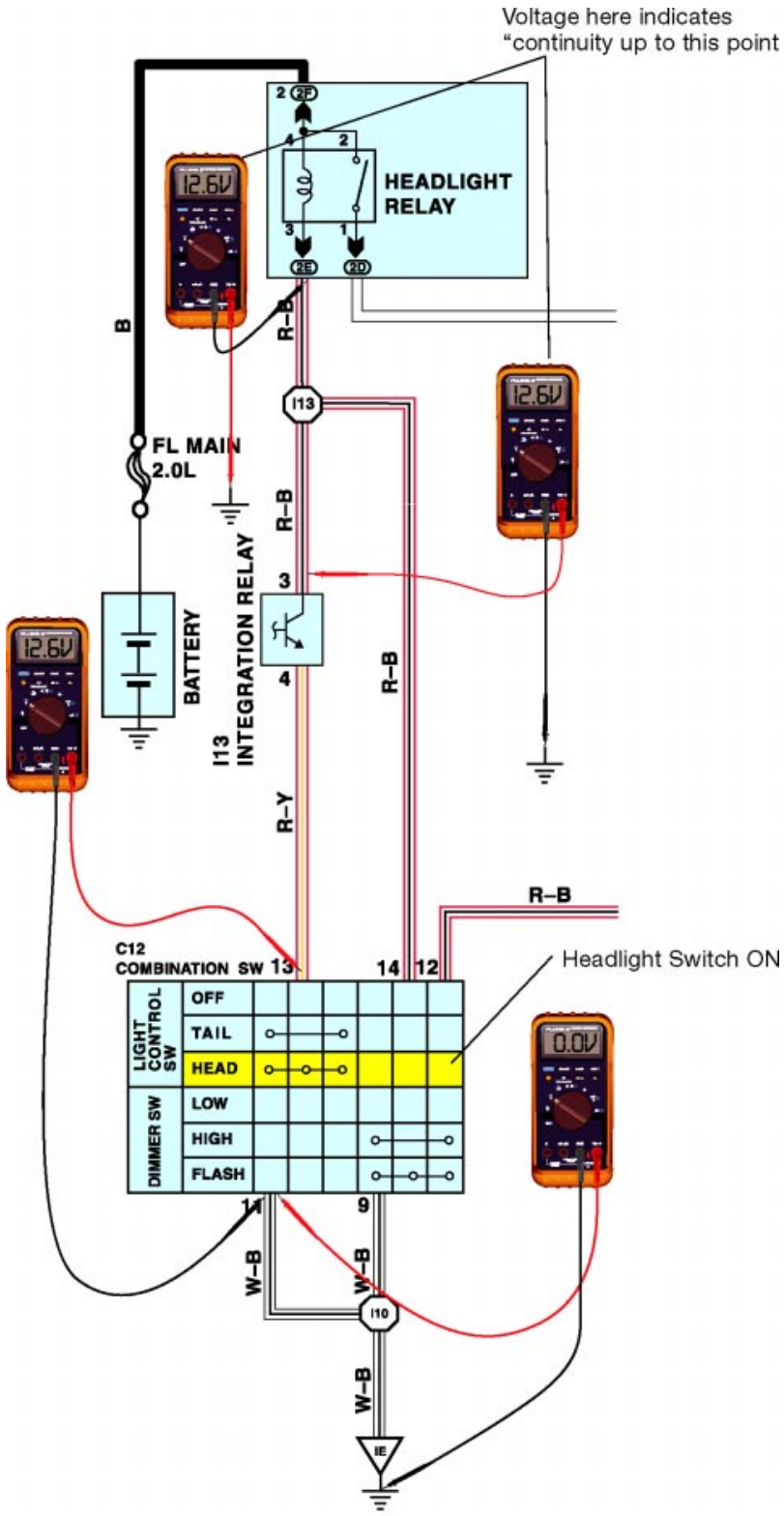

Fig. 5-1
L652f501

Using an Ohmmeter on Open Circuit Problems

An ohmmeter can also be used to check continuity in the wiring on both sides of the circuit.

1. Use the EWD to determine the appropriate test points. Be sure that the circuit is OFF while making the measurement, and that there are *no unwanted parallel connections* in the section of the circuit you are testing.
2. Connect the ohmmeter probes on each end of the section of the circuit you want to check.

Ohmmeter Advantages and Disadvantages

Advantage: Checks for resistance problems

Disadvantage: More difficult to connect to the circuit, requires power to be turned OFF. Usually need to disconnect more connectors to isolate the portion of the circuit being tested. On **high current flow circuits** (starter motor or load which draws above **4A**), the amount of resistance that can cause a problem (in the *tenths of an ohm*) is very small and difficult to detect. A **voltage drop check** is more useful in this case.

Using an Ohmmeter

The Ohmmeter can check for high resistance problems, and see if the relay coil resistance is within specification

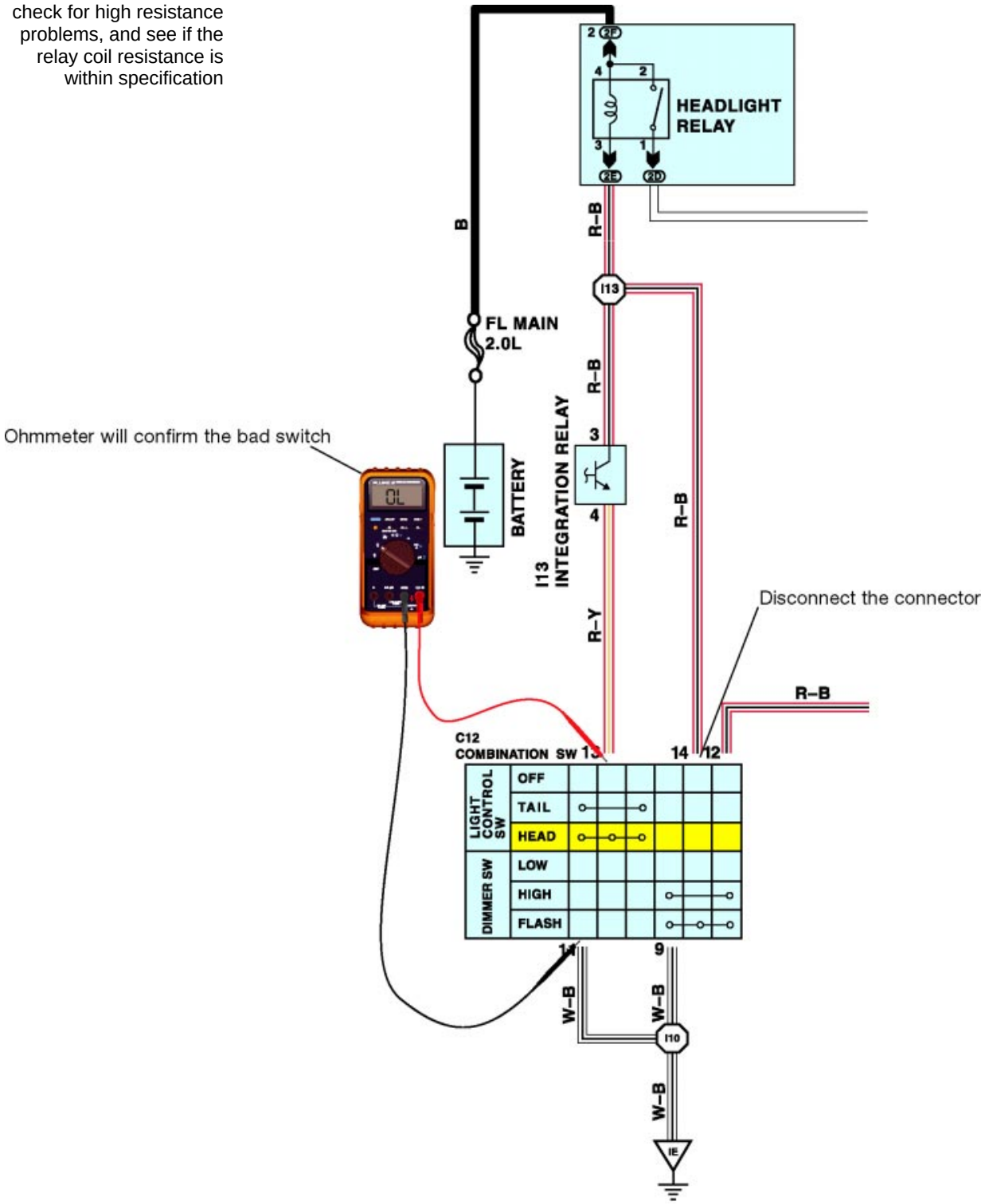

Fig. 5-2
L652I502

Using a Jumper Wire

Use a **jumper wire** to by-pass sections of the circuit.

1. Use the EWD to determine sections circuit which can be by-passed with a jumper wire
2. Connect the jumper wire by backprobing connectors

Jumper Wire Advantages and Disadvantages

Advantages: A quick, simple means of eliminating parts of the circuit

Disadvantage: Could be difficult to use depending on connector/part location; How it is connected into the circuit is critical; has the potential of damaging the circuit.

CAUTION

- Because of the potential for accidental short-to-grounds when using a jumper wire, be sure to follow the EWD and plan the placement of the jumper carefully, **never by-passing a load**! If available, use a fused jumper wire.
- Never by-pass a resistor in a circuit. Components, such as fuel injectors, can have a *series resistor* which limits current flow through the injector solenoid coils. *Shunting* around that resistor could cause significant damage.

Using a Jumper Wire

A Jumper wire can be used to bypass the relay ground circuit to see if the headlight circuit is OK.

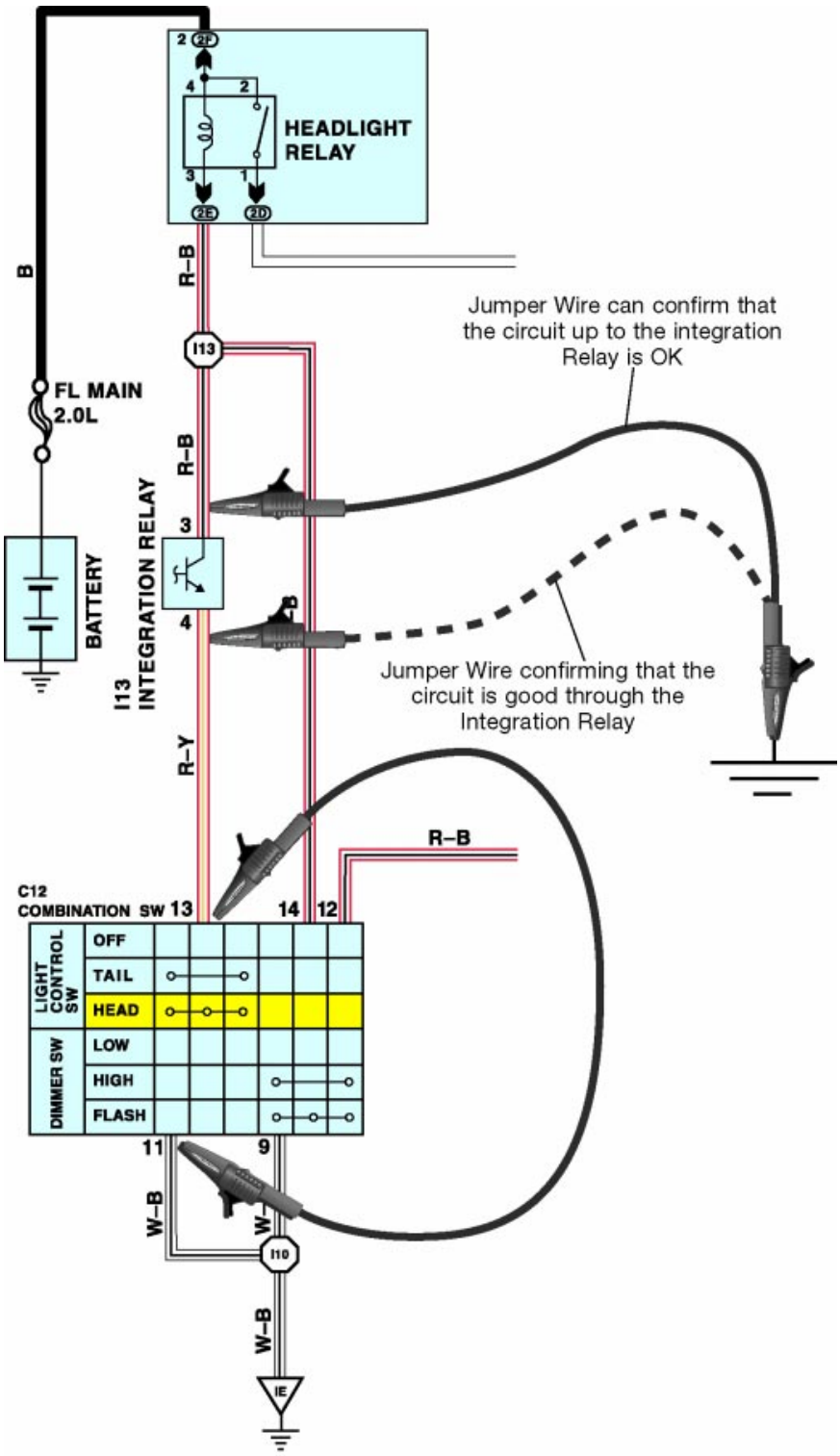

Fig. 5-3
L652f503

High Resistance Problems

High resistance circuit problems are very similar to open circuit problems. But instead of an ***infinite*** amount of resistance stopping current flow entirely, a high resistance problem *adds series resistance* into the circuit to **restrict** current flow. This restriction can cause the load in the circuit to:

- Operate erratically
- Operate *partially* (such as a dim bulb)
- Not work at all (insufficient current flow/voltage)

Causes of a High Resistance Problem

In the best of connections and conductors there will always be a certain amount of resistance. As you learned earlier, there are 5 factors which affect the resistance in any conductor. The condition of the conductor is the factor which is at the heart of all high resistance problems:

- **Corrosion at connections**
  The effects of weather, road salt, and moisture can take its toll on a terminal and harness. Although weather sealing on most terminals has improved greatly, terminal corrosion remains a problem.

- **Cut/chafed wiring**
  Any reduction in the *diameter* of a wire also adds resistance. When any of the strands in a wire are cut, series resistance is also added. Also, a hole in the wire's insulation allows moisture to corrode the wire adding resistance into the circuit.

  Because of the *wicking* action of the wire, this corrosion will eventually affect a large area of the wire, not just the area where the insulation is damaged.

- **Poor grounding point**
  Most circuits on the vehicle use a *chassis ground*, a ground which is fastened to any metal surface of the vehicle. These ground points tend to be more exposed to weathering than the +B side of the circuit, with a high potential for corrosion.

  Many chassis grounding points are located on painted areas. A poor connection could result if the "cutting" action of the terminal or lock washer does not sufficiently clear the paint from the surface.

  By taking this voltage drop, and comparing it to battery voltage, you will know how much voltage is being lost to resistance in the circuit. Remember that for most body electrical circuits, about 0.2V per connection or about 0.5V for the entire circuit is allowed. For low current flow sensor circuits, or any circuit related to an ECU, up to about 0.1V loss in a circuit's wiring and connections is acceptable.

Diagnosing High Resistance Problems

Because you are dealing with a **series resistance**, you can use the *series circuit voltage principles* to quickly determine if you have a high resistance problem and isolate its location.

Determine If There is Current Flow in the Circuit

You can usually determine if there is current flow by seeing if there are any visible signs of operation (dim light bulb, slow turning motor, relay contact "buzzing", etc.). **However, there still can be some current flow in a circuit even if there is no external sign of operation**.

A voltage drop measurement can verify if there is current flow or not. Since voltage drops occur only if there is current flow in a circuit, a **voltage drop at the load**, *with confirmed continuity through the load*, means that there is current flow in the circuit.

Measure for the voltage drop by connecting the voltmeter in parallel directly at the +B and ground terminal of the load, with the circuit ON.

Isolate the Problem

The exact location of a high resistance problem can be easily found. Any resistance in a series circuit causes a voltage drop. To isolate the problem, you just need to look for the voltage drop to "flag" the exact location:

1. Connect the voltmeter in parallel: Place one probe at the ground terminal at the load, and the other probe to a known good ground.
2. With the circuit ON, measure the voltage drop. If the voltage drop **exceeds 0.5V (about 0.2V per connection) you have a problem on the ground side of the circuit**. If the voltage drop is OK, the problem **must be on the +B side of the load**.

   If you want to measure in parallel to the +B side of the circuit, you can connect one probe to the +B terminal of the load, and the other probe to a fuse or other wiring that has a connection to the positive terminal of the battery.
3. When you know which side of the circuit has the problem, use the EWD to locate test points in the circuit (wire harness to wire harness connectors, junction or relay block connectors, etc.) that you can continue to make voltage drop measurements at.

NOTE **Remember that a near 0V drop is normal if the wire/connection is OK. The voltage drop occurs only when there is resistance.**

Isolating a High Resistance Problem

Use a voltage drop check to the ground side of the circuit to eliminate or confirm the ground side as the problem. From that point, continue to use a process of elimination.

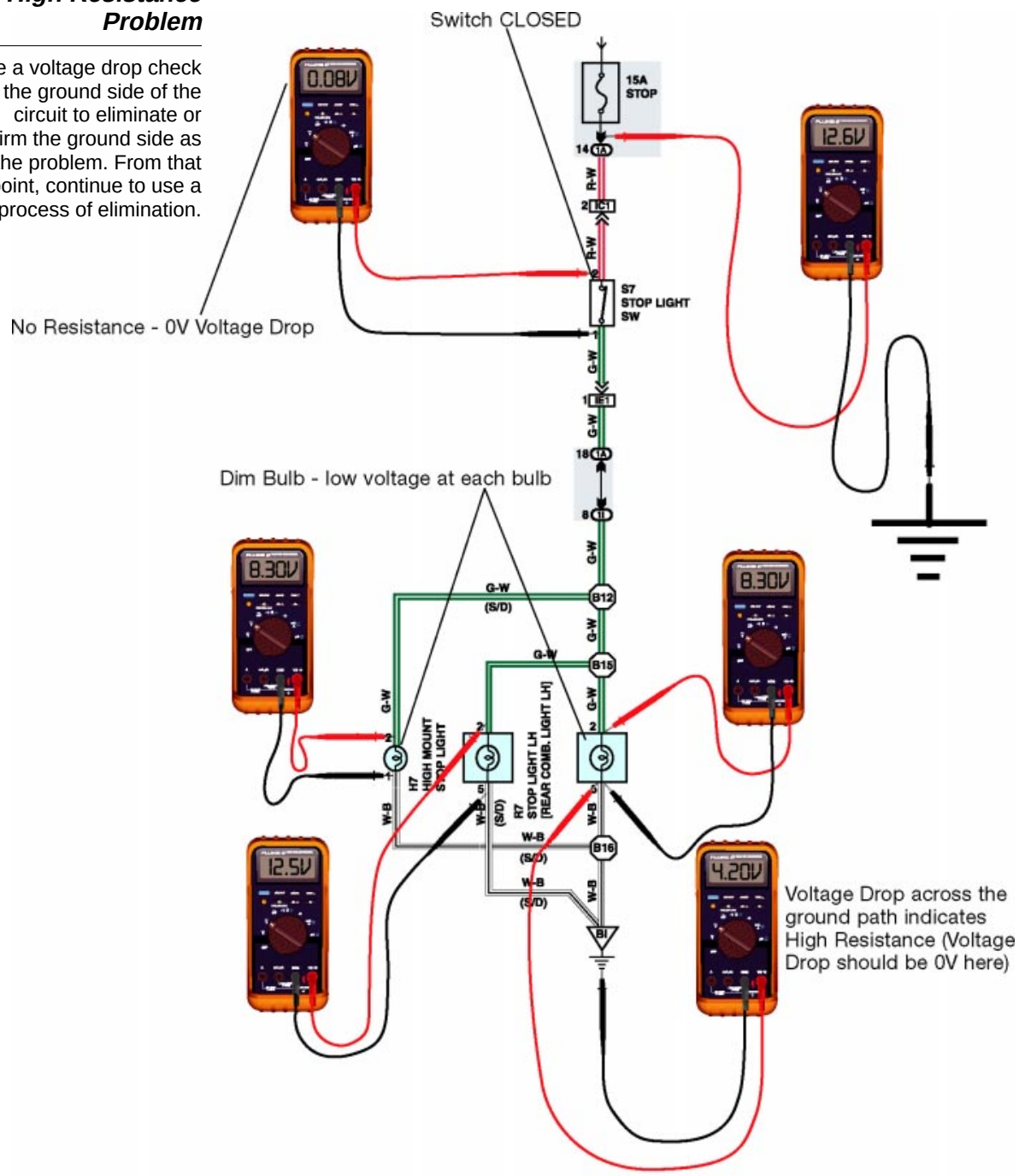

Fig. 5-4
L652f504

Diagnosing Parasitic Load Problems

A **parasitic load** continuously draws current from the battery, even when the key is OFF. With the introduction of ECUs that have a "memory", a small parasitic load of **up to 50mA** is considered **acceptable.** You will find the average parasitic load to be around 20mA or less, depending on the vehicle.

If the customer complains of a dead battery after the car is parked for a day or two (and the charging system/battery are OK), an **unwanted parasitic load** could be the cause. These excessive parasitic loads are usually caused by a short circuit condition where the *control* of the circuit (such as a switch) is bypassed, causing the load to be ON all the time.

Parasitic Load Diagnostic Procedure

Isolating a parasitic load problem is a matter of disconnecting various fuses, junction blocks, wire harness-to-wire harness connectors, and individual connectors or pins (applying a strategic process of elimination). This process can be broken into two parts:

- **Isolate the fuse** which "feeds" the parasitic load
- Determine **which individual circuit has the problem** by disconnecting connectors fed by that fuse.

Verify the Problem and Isolate the Fuse

1. **Verify that all lights and accessories are OFF. (An important step!)**
2. Connect an ammeter to the battery negative terminal, and measure the current draw. **If above 50mA, a parasitic load problem exists**.
3. **Disconnect fuses one-by-one** until the parasitic load drops to a normal level.

CAUTION

Some **aftermarket alarm systems** operate the horn or a siren when the battery is reconnected. This high current flow could potentially blow the fuse in your ammeter. To avoid this problem:

1. **Connect a jumper wire between the battery post and battery cable** to let the initial surge of current pass.
2. **With the jumper wire still connected, connect the ammeter** to the battery post and cable.
3. **Disconnect the jumper wire** and measure the parasitic load. All that is left now is a process of elimination. Since you know which fuse is connected to the problem, you now need to find which circuits are connected to that fuse and disconnect the circuits one-by-one until parasitic load drops off. There are two different "strategies" that you can use to pinpoint the location of the parasitic load:

Measuring Parasitic Load

If an aftermarket alarm system is installed, connect a jumper wire between the battery negative terminal and the red meter lead, touch the black meter lead to the negative battery post, lift the terminal over the meter lead, and measure the parasitic load.

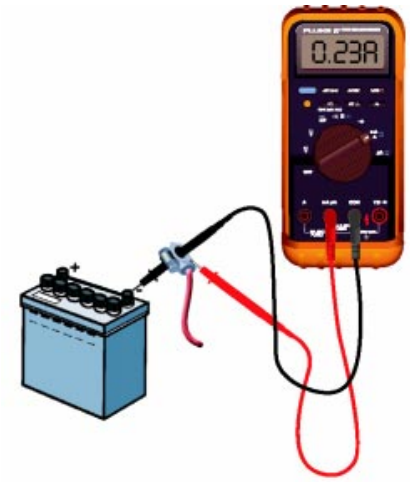

Fig. 5-5
L652f505

Determining the Location

- **Disconnect components that are fed by that fuse.** Look at **Section H Power Source (Current Flow)** to find the components which use that fuse, and one-by-one, disconnect these components until the parasitic load drops off. This simple, straightforward approach can have some time saving advantages *if there are not a lot of components that are connected to the fuse* (too many connectors to disconnect), and if most or all of the *connectors are easy to get to*.

NOTE

When disconnecting the components, choose each one **strategically**. Go first to the components that are the easiest to get to, or to components that have a history of causing these unwanted "draws". Areas to check first include lighting circuits (trunk light, vanity light, interior light, etc.), and aftermarket accessory installations.

- **Follow the current flow through the Junction Blocks.** If there are a very large number of individual components which use the fuse, you may want to isolate the junction block used by the problem circuit. By finding the junction block, you will be able to narrow down the number of component connectors you will have to disconnect. The procedure to follow is listed below. **Note that this is a time consuming process, and should only be used if there are too many components that would have to be disconnected, or if the component connectors are not easy to get to.**

Procedure for Mapping Current Flow Through the J/Bs

1. To determine which Junction Block connectors are fed by that fuse: Look at **each** *System Circuit Diagram* for that specific fuse at the top of the page. **Note any Junction Blocks or Junction Connectors that are used, and write down the connector and terminal numbers.** (This is a time consuming step, but it has to be done.)
2. **Disconnect each *junction block connector* individually** until the parasitic load drops to a normal level. By doing this, you are identifying which connector provides power to the problem circuit.
3. If a single J/B connector has two or more pins which branch into other circuits, you can isolate the individual circuits on the J/B connector by *carefully* removing the specific terminals, one at a time. If you have an inductive ammeter which is sensitive enough to measure the parasitic amperage, simply clamp around the specific wires to determine which one is connected to the problem.
4. Look at the list of J/B connectors and terminal numbers that you wrote down earlier. **See which circuits use that specific J/B connector and pin.**
5. **Isolate individual components** in each of those circuits. **Disconnect the connector** at any of the loads or at a wire harness-to-wire harness connector. Watch for the **parasitic load to drop to a normal level on the ammeter**. When this happens, you know that you have disconnected the problem from the circuit. Again, you can also use an inductive ammeter (if the amperage is high enough) to pinpoint the problem wire.
6. Reconnect the connector, and strategically disconnect other connectors until you isolate the problem.
7. Once the location of the short causing the parasitic load has been isolated, **make the repair**.

Mapping Current Flow Through the J/Bs

Looking at the system circuit diagrams of the circuits which use the fuse, you need to write down which J/B connectors and pins are used. This map of the current flow will help you track down the cause of the problem.

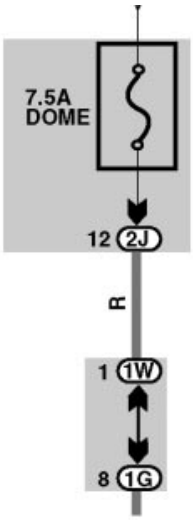

Circuit	Junction Block Connectors				Junction Connectors	
					ID #	PIN
Automatic Light Control	12 2J	1 1W	8 1G		J5	A
Clock	12 2J	1 1W	8 1G		J5/J6	A/B
DRL Relay	12 2J	1 1W	7 1V			
Ignition Key Cyl	12 2J	1 1W	2 1M		J15	A
Luggage Comp. Light	12 2J	1 1W	9 1S			
Vanity Light RH	12 2J	1 1W	5 1F			

Fig. 5-6
L652I506

Diagnosing Shorts-to-Ground

A **short-to-ground** occurs whenever a circuit finds a path to ground *before going through the load*. Because current flow is no longer controlled by the resistance of the load, excessive current flow forces the fuse or circuit breaker to “blow”, avoiding damage to the wiring.

The process for diagnosing a short-to-ground has similarities to diagnosing a parasitic load. The major differences are:

Short-to-Ground Diagnostic Strategy

- You **know exactly which fuse** the problem is connected to.
- You **need to connect a load (such as a test light, short finder, or headlight) in place of the fuse** while isolating the location of the problem.
- You know that the short-to-ground will be **located in either the load itself or in the wiring before the load**. The problem can never be on the ground side of a load. Because the short-to-ground could potentially be located somewhere within the harness, the number of possible causes is multiplied.

Selecting a Load

A load of some type must be used in place of the fuse in order to diagnose the circuit. It is a common practice to use an ordinary 12V test light. But be aware that **not just any test light will work**. In fact, if the fuse circuit you are testing is connected to a number of unswitched parallel branches (especially lighting circuits), **an average test light will be ON at all times, even if the short-to-ground is fixed**!

Power Source (Current Flow) Chart (Pre 1999 MY)

Use the Current Flow Chart to find all the loads powered by the blown fuse.

		*Page Nos.of Related Systems	104	104	104	104	104	104	104 182 242 256	256	60 88 82	68 82	68 82 204	68 82 204	118	118	108 122	108 122	140	118	192	192	88 82 256
		Parts / Code or Location	Door Courtesy Light Front LH	Door Courtesy Light Front RH	Door Courtesy SW Front LH	Door Courtesy SW Front RH	Door Courtesy SW Rear LH	Door Courtesy SW Rear RH	Diode (DOME)	Engine Oil Level Warning SW	Engine Control Module	Engine Control Module	Engine Control Module	Engine Control Module	Front Fog Light LH	Front Fog Light RH	Front Turn Signal and Front Parking Light LH	Front Turn Signal and Front Parking Light RH	Front Wiper Motor	Front Fog Light Relay	Fuel Lid and Luggage Compartment Door Opener SW	Fuel Lid Opener Solenoid	Fuel Pump and Fuel Sender
		CB or Fuse	D7	D8	D9	D10	D11	D12	D20	E6	E7	E8	E10	E11	F1	F2	F3	F4	F5	F12	F13	F18	F19
①	50A	HTR																					
	5A	TEL																					
	7.5A	DOME	●	●	●	●	●	●	●														
	10A	ECU-B																					
	10A	HAZARD															●	●					
	10A	HORN																					
②	15A	EFI									●	●	●	●									●
	15A	HEAD(LH)																					
	15A	HEAD(RH)																		●			
	20A	RADIO NO.1																					
	30A	CDS																					
	30A	RDI																					
	25A	A/F HTR																					
③	10A	H-LP LH(LWR)																		●			
	10A	H-LP RH(LWR)																					
④	60A	ABS																					
	5A	IGN												●									
	5A	STARTER									●		●	●									
	7.5A	OBD																					

Fig. 5-7
L652f507

Power Source (Current Flow) Chart (Beginning 1999 MY)

Starting with the 1999 MY, the Power Source (Current Flow) Chart becomes a table format.

J

Fuse		System	Page
10A	GAUGE	Stop Light	122
		Taillight	108
		VSC	216
10A	HEATER	Automatic Air Conditioning	272
		Rear Window Defogger and Mirror Heater	248
10A	MIRROR-HEATER	Engine Control (Brazil)	74
		Engine Control and Engine Immobiliser System (USA and Canada)	62
		Rear Window Defogger and Mirror Heater	248
10A	TAIL	Engine Control (Brazil)	74
		Engine Control and Engine Immobiliser System (USA and Canada)	62
		Taillight	108
15A	CIG	Cigarette Lighter and Clock	246
		Remote Control Mirror (w/o Driving Position Memory)	150
		Shift Lock	210
		SRS	235
15A	ECU-IG	ABS	230
		ABS and Traction Control	222
		Automatic Glare-Resistant EC Mirror	250
		Cellular Mobile Telephone	252
		Cruise Control	192
		Door Lock Control	160
		Electric Modulated Suspension	212
		Headlight Beam Level Control	98
		Power Seat (Driver's Seat w/ Driving Position Memory)	146
		Radiator Fan and Condenser Fan	268
		Shift Lock	210
		Theft Deterrent	168
		VSC	216
		Wireless Door Lock Control	174
15A	FOG	Front Fog Light	116
15A	POWER-OUTLET	Power Outlet	134
15A	STOP	ABS	230
		ABS and Traction Control	222
		Cruise Control	192
		Electric Modulated Suspension	212
		Electronically Controlled Transmission and A/T Indicator (Brazil)	204
		Electronically Controlled Transmission and A/T Indicator (USA and Canada)	198
		Engine Control (Brazil)	74
		Engine Control and Engine Immobiliser System (USA and Canada)	62
		Power Seat (Driver's Seat w/ Driving Position Memory)	146
		Shift Lock	210
		Stop Light	122
		VSC	216

* These are the page numbers of the first page on which the related system is shown.

291

Fig. 5-8
L652f508

In general, it is better to **use a load which requires a few amps to operate**, such as a sealed beam headlight. With a **sealed beam headlight**, you will see a “bright light” go “dim” when the short-to-ground is disconnected. But there are alternatives to this approach.

Some technicians use a *short finder* or circuit breaker in place of the fuse. A short finder kit consists of a circuit breaker and a low-quality inductive type ammeter or compass. While the circuit breaker “pulses” the circuit OFF and ON, you follow the wiring with the inductive ammeter. When you reach the location of the short-to-ground, the ammeter will no longer show any current flow in the wire.

The success rate using a short finder is mixed. Isolating and following a circuit’s wiring behind the instrument panel, or through harnesses which have additional wires that have *normal* current flow through them can be difficult. Keep in mind that depending on the gauge of wire and the type of insulation (vinyl or PVC), a circuit breaker **(even a short finder) will allow momentary “bursts” of current flow that may exceed the capacity of wiring**, possibly causing heat damage to the insulation or wire, and could also damage adjacent wires in the harness.

The Bottom Line

The best tool to use for a finding a short-to-ground is a sealed beam headlight or a load which uses a few amps. A test light, short finder or circuit breaker can be used, but precautions must be taken to prevent damaging the harness, or mis-diagnosing the problem.

Use a Headlamp as a Load in Place of the Fuse

Using a circuit breaker or short finder could potentially damage some circuits. A load which draws around 3A to 8A will work best.

Fig. 5-9
L652f509

Short-to-Ground Diagnostic Procedure

To determine the location of a short-to-ground:

1. Locate the blown fuse, and **inspect its condition**:
   - **If "blown cleanly" or is "charred"**—you know that you have a direct short-to-ground condition.
   - **If it looks "melted"**— a large amount of current flow went through it for a period of time; check for an overload condition. This could be caused by aftermarket accessory installations. This condition can also be caused by a source of heat adjacent to the fuse. A poor connection near or at the fuse, while causing less current flow in the circuit, can also generate a significant amount of heat which can damage the fuse.
   - **If fuse looks "fractured"**—probably a defective fuse; replace the fuse and recheck the system.

Blown Fuses

The condition of a blown fuse can tell what caused the fuse to blow.

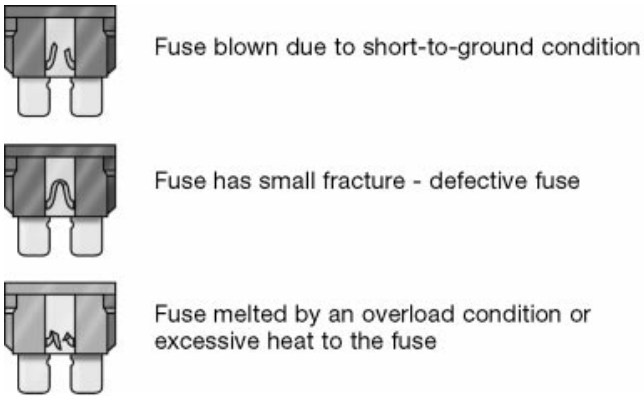

Fig. 5-10
L652f510

2. Determine if the short-to-ground is **intermittent or continuous**.
   - If it's not clear whether the fuse is blowing intermittently or on a continuous basis, (and if a supply of replacement fuses is available), replace the blown fuse with a new one, and retest the circuit.
   - **If the fuse is blowing intermittently**, find out the exact *conditions* which cause the fuse to blow. This may point you directly to the problem circuit.
3. **Connect an appropriate load in the place of the blown fuse.** With the short-to-ground condition present, the load should be ON.

Connect an Appropriate Load

The lamp will go OFF when the short has been disconnected.

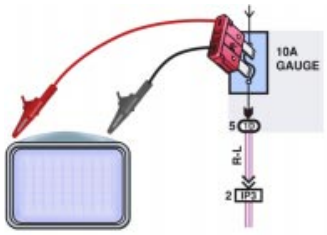

Fig. 5-11
L652f511

Disconnecting Component Connectors First

Your next step in this process of elimination is to disconnect individual connectors. Where to start is not as "clear cut" as it is with a parasitic load. Here are the advantages and disadvantages of two strategies:

Mapping Current Flow Through the J/Bs

Using **Section H, Power Source (Current Flow)**, determine which components are connected to that fuse. If the components connected to the blown fuse are accessible, and there are not too many, it can be a quick means of eliminating some of the possible causes. But if the problem is in the harness, you will have to use the *"mapping current flow through the Junction Blocks"* technique.

Mapping Current Flow Through the J/Bs

Your use of the Power Source Matrix and System Circuit Diagrams is the same as when diagnosing a parasitic load problem.

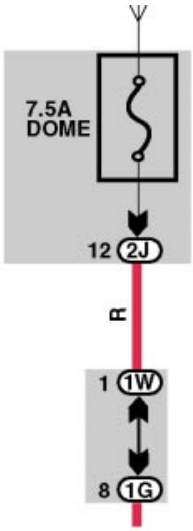

Circuit	Junction Block Connectors				Junction Connectors ID #	PIN
Automatic Light Control	12 2J	1 1W	8 1G		J5	A
Clock	12 2J	1 1W	8 1G		J5/J6	A/B
DRL Relay	12 2J	1 1W	7 1V			
Ignition Key Cyl	12 2J	1 1W	2 1M		J15	A
Luggage Comp. Light	12 2J	1 1W	9 1S			
Vanity Light RH	12 2J	1 1W	5 1F			

Fig. 5-12
L652f512

This method is similar to the procedure used in the parasitic load diagnosis section, except that you are watching for the load to turn OFF, instead of watching the ammeter. Because the current flow in the circuit will be a **few amps instead of milliamps**, you can use an **inductive ammeter** to isolate which individual wire at the J/B connector feeds to the short-to-ground. This is much easier than removing the individual terminals from the J/B connector.

1. Determine which Junction Block Connectors are fed by that fuse. Look at **each** *System Circuit Diagram* for that specific fuse at the top of the page. Note any **Junction Blocks or Junction Connectors** that are used, and **write down the connector and terminal numbers.** Again, this is a time consuming step, but it must be done.
2. **Disconnect each junction block connector individually** until the load turns OFF. By doing this, you are identifying which J/B connector provides power to the problem circuit. Reconnect the connectors.
3. In some circuits, a single J/B connector can distribute power from a fuse into a number of different circuits. You can isolate which terminal/wire is connected to the short-to-ground by using an inductive ammeter or by individually removing each terminal until the load turns off.
4. Look at the list of J/B connectors and terminal numbers that you wrote down earlier. **See which circuits use that specific J/B connector and pin.**
5. Look at the System Circuit Diagrams of the circuits from your list in step 1. **Isolate circuits by disconnecting appropriate harness-to-harness connectors**, watching for the load to turn OFF. This will further pinpoint the problem circuit, but you may still need to isolate which terminal/wire is connected to the short-to-ground by using an inductive ammeter or by individually removing each terminal until the load turns off. Also, you may need to cross-reference the various splice points between the circuits by looking at the individual wiring diagrams.
6. Continue to strategically disconnect/reconnect connectors in the circuits until you isolate the problem.
7. Once the location of the short-to-ground has been isolated, **make the repair**.

Remember that with a short-to-ground, the problem must be on the +B side of the load, or in the load itself.

Isolate the Problem

Strategically disconnect connectors to isolate the location of the short. When the test light does not go off, you know that you are AFTER the short. When the light goes off, you know that you have opened the circuit BEFORE the short.

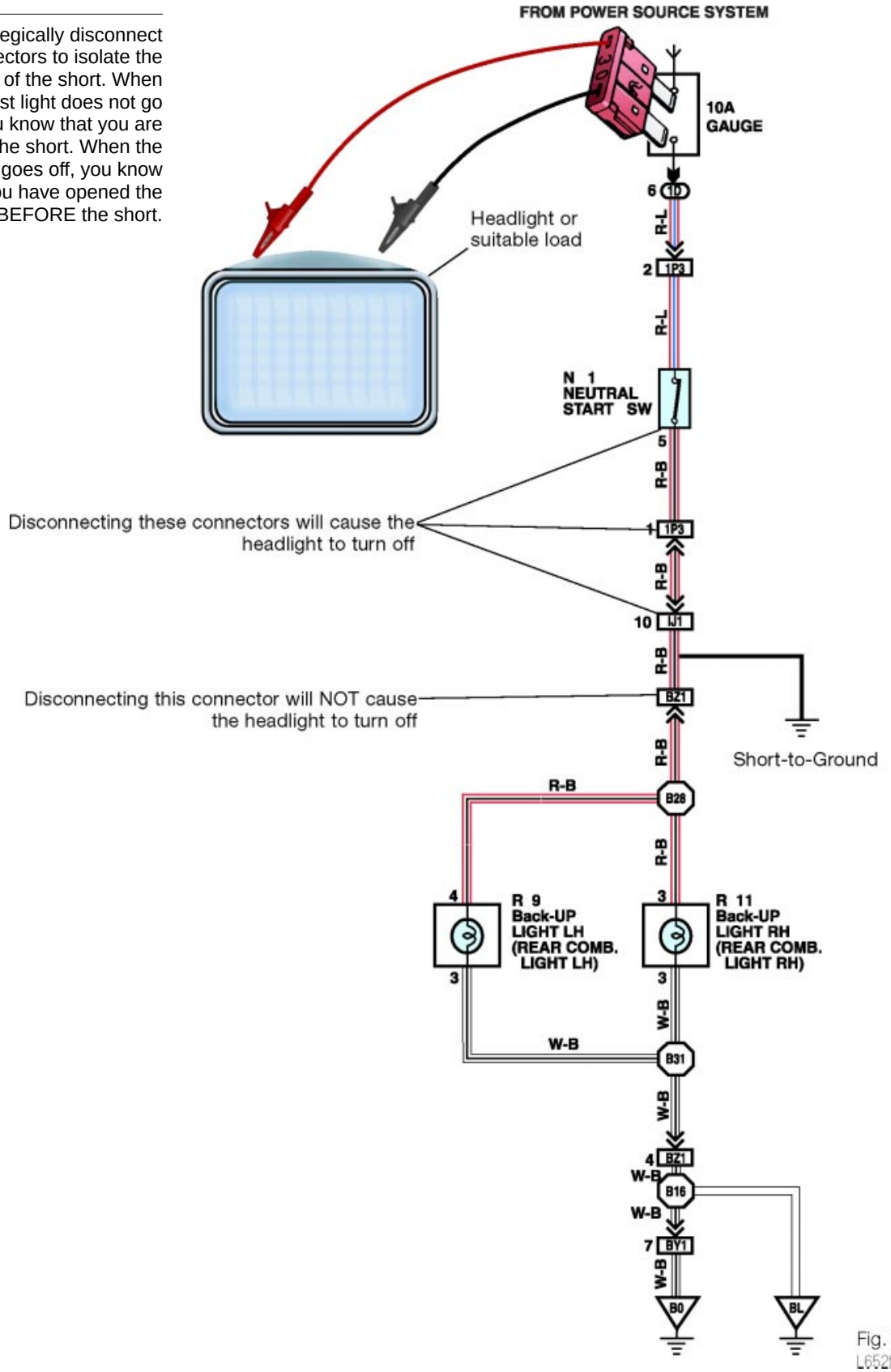

Fig. 5-13
L652f513

Feedback Problems

Feedback problems are probably the strangest electrical problems you can encounter on a vehicle. At one time or another, you have probably seen an electrical problem that just did not make sense, with seemingly unrelated circuits affecting each other like “magic”:

- Operating the right side turn signal causes the side markers to flash
- When the rear defogger is turned ON, the radio turns OFF
- When the horn is operated, the high beam indicator turns ON.

As you know, there is no “magic” in electricity. These circuits have to be related through parallel connections on either the +B or the ground circuit. For example, an open in the circuit to a ground point (in a circuit that has no redundant or alternate ground path) will force current flow to find another path to ground. This other path to ground can be through any load or resistance that has a parallel connection to the problem circuit.

Feedback Problem

Figuring out the cause of a feedback problem can be very difficult. You may need to look at separate EWD pages to find connector terminal relationships that cause feedback problems.

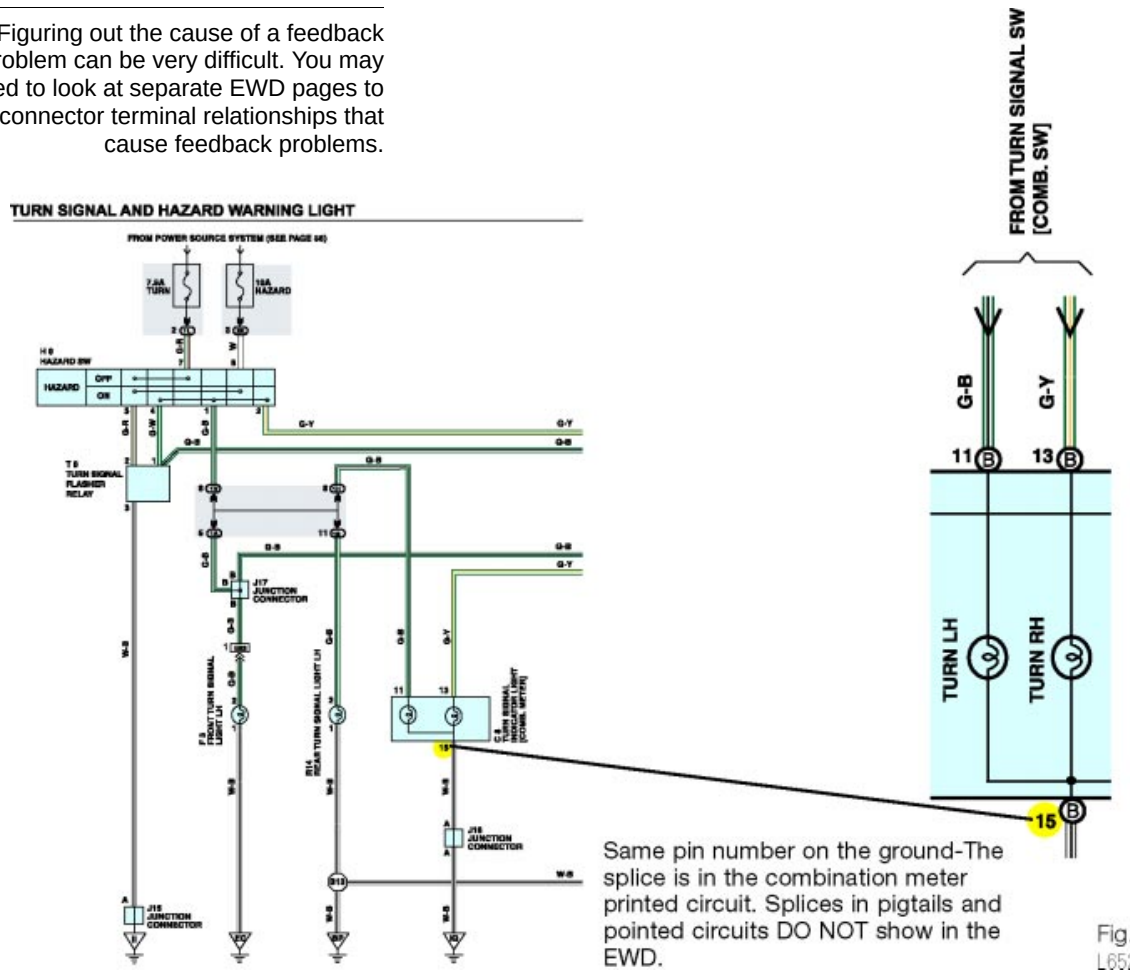

Fig. 5-14
L652f514

Diagnosing a Feedback Problem

With a feedback problem, tracing the path of current flow is extremely difficult. You have to think *backwards* as you try to guess where current flow is going. Since feedback problems don't happen very often, **figuring out** how everything is happening could be a very time consuming process.

Quick Checks for Lighting Circuits

Fortunately, there are some quick checks that you can make to catch just about any feedback problems you will run into.

One of the most common areas of feedback problems is in the car's exterior lighting circuits. When working on a **lighting circuit feedback problem** check the following:

- A shorted light bulb (by a blown filament).
- The customer installed light bulb of the incorrect type or wattage.
- There is an open in one of the light bulb grounds. Use an ohmmeter to check the ground (the socket of the bulb). To do this accurately, be sure to remove all the lights in that combination light. This way, the ohmmeter will not be measuring a parallel connection to ground through one of the other filaments.

Checking Lighting Circuits

Check for shorted light bulbs and open ground paths. Remove the light bulbs and individually inspect the ground paths.

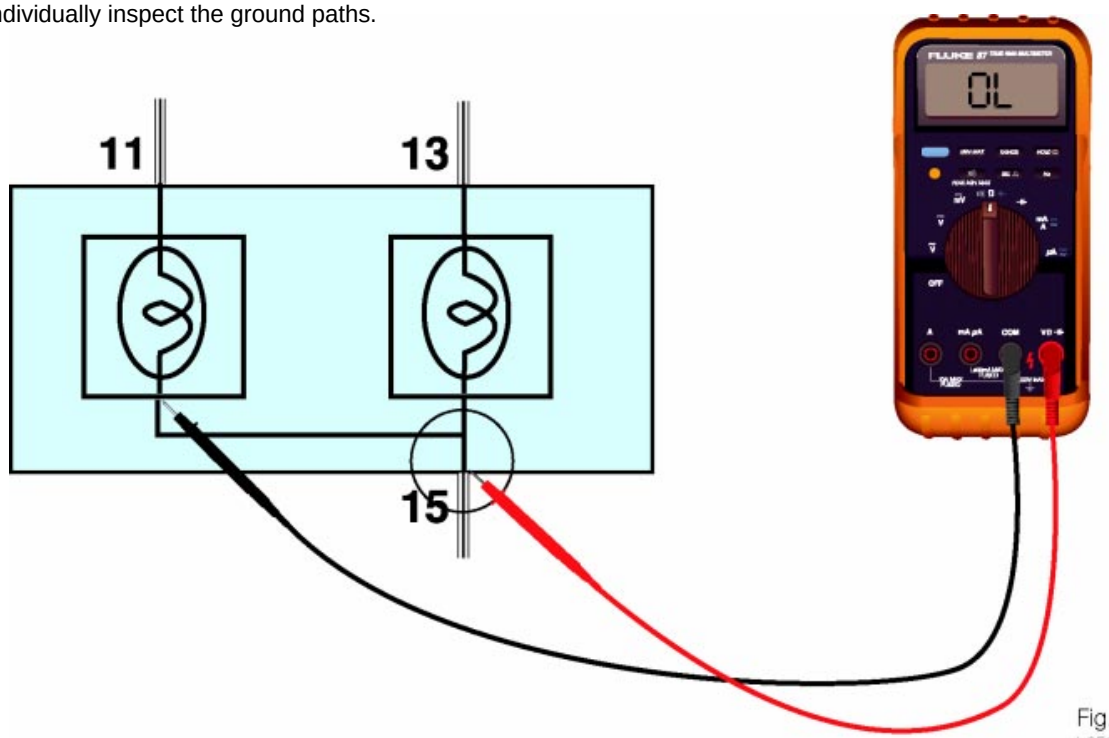

Fig. 5-15
L652f515

Quick Checks for General Feedback Problems

When diagnosing feedback in any body electrical circuit:

1. **Check the fuses**
   Look for a blown fuse on any circuit. The lack of a voltage in a circuit can sometimes allow voltage from one circuit to feedback into another.

2. **Check for open ground wires**
   A simple disconnected ground wire can cause the worst of feedback problems.

3. **Check for an open circuit isolation diode**
   In many circuits, a diode is used in the circuit to prevent feedback problems from happening. If you are operating a circuit that has an isolation diode, and the feedback condition occurs, it's a good place to check.

If the Quick Checks Do Not Find the Cause

If these quick checks **do not find the cause** of the problem:

1. **Thoroughly check each circuit individually**
   Make your inspections to *one circuit at a time*, and make sure current flow is going **exactly** where it's supposed to. Check each connection and section of wiring with an ohmmeter, making sure that there is continuity to the correct locations as *specified* in the EWD. Apply this check to both the +B and ground sides of the circuit.

2. **Technical Assistance**
   With a database of **solved** problems from throughout the country, Lexus Technical Assistance can be of great help for this type of problem. When you reach the "wall" in diagnosing the problem, call your Region/PD's assigned TAS.

WORKSHEET 5-0 (ON-VEHICLE)
On-Vehicle Diagnosis

Vehicle	Year/Prod. Date	Engine	Transmission

Worksheet Objectives

At the conclusion of this worksheet you will have developed the skills to:

- Access TIS for the appropriate Service Literature.
- Select the appropriate tools, equipment, and reference material necessary to identify an electrical circuit fault and affect a repair on the vehicle that has been assigned to you.
- Use the selected service literature, tools, and equipment to identify an electrical fault applicable to the vehicle assigned to you (open circuit, short circuit [-to-ground/to-power], high resistance condition, parasitic load, or a feedback/crossover condition).

Tools and Equipment

- Vehicle
- Repair Manual and EWD appropriate to the vehicle
- DVOM
- Hand Tool Set
- Fender Covers, Seat Covers, Floor Mats, and Shop Towels
- L652 Technician Handbook
- Green and Pink Color Highlighters

Section 1: Verify the Complaint

1. Reference the R.O. to ascertain the customer complaint.

2. Verify the problem.

3. Problem Description:

_____

_____

❑ **Problem Found** (check one): ❑ **Intermittent** ❑ **Continuous**

❑ **No Problem Found**—Operation is normal. Explanation:

_____

_____

Step 2: Determine the Related Symptoms

1. Access TIS for the appropriate Service Literature applicable to the vehicle that has been assigned to you.

2. Reference the Owner's Manual for proper operation and using the EWD, read the System Outline (if available) and Service Hints to determine how the circuit is designed to work.

3. Determine which circuit contains the likely root cause of the problem.

4. Determine how much of the circuit is affect.

   - **If all of the circuit is affected,** operate other circuits to determine if they are related to the problem because of a parallel connection. **Tip:** Check common sources, ground points, and shared sensor or switch functions.
   - **If only part(s) of the circuit is affected,** determine exactly which parts are operational and which are inoperative.

Circuit	OK or Bad	Observations

Step 3: Analyze the Symptoms

1. Based upon the original complaint, the results of your observations, the related symptoms checks, and your determination of the type of electrical fault that you are looking for (i.e. short, open, high resistance, etc.), identify the problem:

	OPEN CIRCUIT
	SHORT CIRCUIT (-to-ground/-to-power)
	HIGH RESISTANCE
	PARASITIC LOAD
	FEEDBACK/CROSSOVER

2. Access the appropriate system circuit diagram(s) from TIS and use the highlighter provided to trace the current flow in the circuit.

Step 4: Isolate the Trouble

1. On the System Circuit Diagram, **circle the possible problem areas.**

2. List the first 2 items you will inspect. Mark the **type of inspection** (visual, voltmeter, ohmmeter, ammeter or jumper wire) and write in **the inspection item** (component, connector with pin numbers, wire color, etc.) in the table below.

3. List the **specifications**, the **measured result** and **your diagnosis** in the appropriate column.

4. If the initial checks lead you to make **additional inspections**, list them in the shaded area.

Inspection Type	Inspection Item	Specification	Measured Result	OK or Bad
❑ Visual ❑ Voltmeter ❑ Ohmmeter ❑ Ammeter ❑ Jumper Wire				
❑ Visual ❑ Voltmeter ❑ Ohmmeter ❑ Ammeter ❑ Jumper Wire				
❑ Visual ❑ Voltmeter ❑ Ohmmeter ❑ Ammeter ❑ Jumper Wire				
❑ Visual ❑ Voltmeter ❑ Ohmmeter ❑ Ammeter ❑ Jumper Wire				
❑ Visual ❑ Voltmeter ❑ Ohmmeter ❑ Ammeter ❑ Jumper Wire				
❑ Visual ❑ Voltmeter ❑ Ohmmeter ❑ Ammeter ❑ Jumper Wire				
❑ Visual ❑ Voltmeter ❑ Ohmmeter ❑ Ammeter ❑ Jumper Wire				
❑ Visual ❑ Voltmeter ❑ Ohmmeter ❑ Ammeter ❑ Jumper Wire				

Step 5: Correct the Trouble

1. Cause of problem and location:	**Instructor OK**

2. Correct the problem if your instructor directs you to do so.

Step 6: Check for Proper Operation

1. Re-test the system/circuit to verify the repair if your instructor directs you to do so.

2. Please return the vehicle and the workstation to their original condition.

You have now completed this worksheet. You should have acquired the skills to access TIS for the appropriate service literature, select the appropriate tools and equipment, and reference the material necessary to identify an electrical circuit fault (open or short circuit, high resistance in a circuit, parasitic load in a circuit, feedback/crossover situation in a circuit) and affect a repair.

If you have any doubts about your understanding of the material or your skills, please review your work. Once you are confident of your skills, have your instructor verify your work.

On-Vehicle Diagnosis

Name: _____ Date: _____

Review this sheet as you are doing the *On-Vehicle Diagnosis* worksheet. Check each category after viewing the instructor's presentation and completing the worksheet. Ask the instructor if you have questions regarding the topics provided below. Additional space is provided under topic for you to list any other concerns that you would like your instructor to address. The comments section is provided for your personal comments, information, questions, etc.

I have questions

I know I can

Topic			Comment
Verify a customer complaint related to an electrical problem			
Access TIS for the Appropriate Service Literature			
Provide a trace of the Current Flow through a circuit			
Select the appropriate tools and equipment necessary to identify a fault			
Use a DVOM to measure Voltage, Amperage, and Resistance in Series and Parallel Circuits			
Select the appropriate tools and equipment necessary to affect the repair of the fault			

Notes

WORKSHEET 5-1
Dome Fuse Circuit

Vehicle	Year/Prod. Date	Engine	Transmission

Worksheet Objectives

At the conclusion of this worksheet, you will be able to create a map of Junction Block Connectors in order to deduce the probable cause of an electrical problem.

Tools and Equipment

- 1998 ES 300 EWD

Using the DOME fuse circuit of the **1998 ES 300 EWD**, list the Junction Block Connectors and Junction Connectors used in each circuit.

Circuit	EWD Page #	Junction Connectors									
		ID#	Pin	ID#	Pin	ID#	Pin	ID#	Pin	ID#	Pin

Notes

Dome Fuse Circuit

Name: _____ Date: _____

Review this sheet as you are doing the *Dome Fuse Circuit* worksheet. Check each category after viewing the instructor's presentation and completing the worksheet. Ask the instructor if you have questions regarding the topics provided below. Additional space is provided under topic for you to list any other concerns that you would like your instructor to address. The comments section is provided for your personal comments, information, questions, etc.

I have questions

I know I can

Topic			Comment
Create a map of Junction Block Connectors			

Notes

WORKSHEET 5-2 through 5-19
ES 300 Body Electrical Simulator

Vehicle	Year/Prod. Date	Engine	Transmission

Worksheet Objectives

The following worksheets—WORKSHEET 5-2 through WORKSHEET 5-19—have been designed to be performed on the ES 300 Body Electrical Simulator and provide you with the opportunity to further develop the following skills:

- Following the 6-Step Troubleshooting Process
- Locating sections of the EWD
- Tracing the path of Current Flow in a circuit
- Using the DVOM
- Isolating a fault in a circuit

Tools and Equipment

- 1999 ES 300 EWD
- ES 300 Body Electrical Simulator
- DVOM

Notes

WORKSHEET 5-2
ES 300 Body Electrical Simulator - Fault Switch #1

Vehicle	Year/Prod. Date	Engine	Transmission

Problem Description: **HEADLIGHTS INOP**

❑ **Problem Found** (check one): ❑ **Intermittent** ❑ **Continuous**

❑ **No Problem Found**—Operation is normal.

Explanation: _____

Step 2: Determine the Related Symptoms

1. Using the EWD, read the System Outline to see how the circuit is supposed to operate (if available).

2. Determine if it affects **ALL** or **PART** of the circuit.

   - **If all of the circuit is affected** check the operation of circuits which have common fuse/power sources and also circuits which use common grounding points.
   - **If only part(s) of the circuit** is affected, determine exactly which parts are OK and which are inoperative.

Circuit	OK or Bad	Observations

Step 3: Analyze the Symptoms

1. Based upon the original complaint, and your related symptoms checks, specifically identify the problem:

   _____

2. *On the following System Circuit Diagram:* Based upon your related symptom checks, use a highlighter to **trace current flow in the parts of the circuit that are OK.**

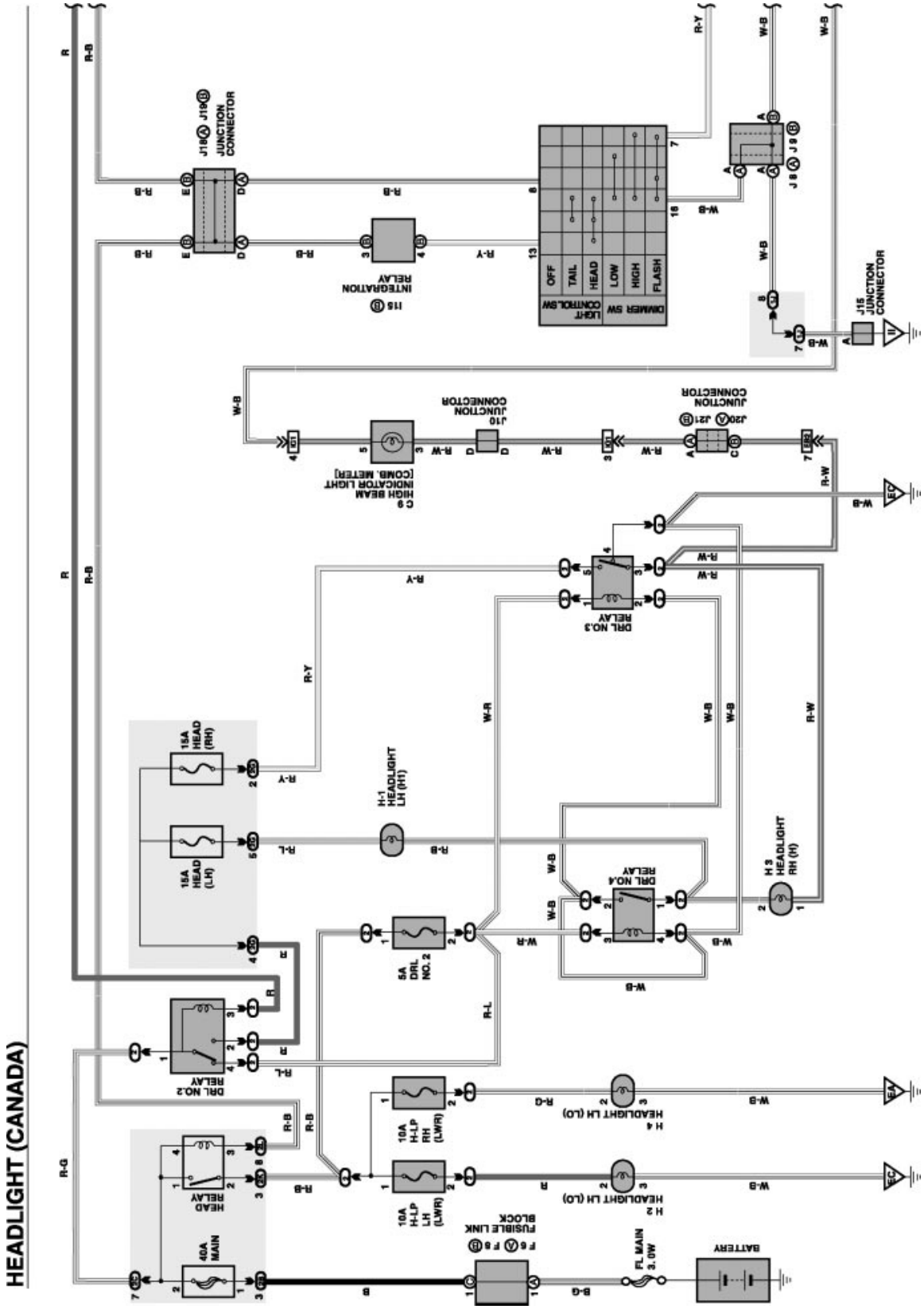
HEADLIGHT (CANADA)
BATTERY
FL MAIN 3.0W
FUSIBLE LINK BLOCK
F 5
F 6
40A MAIN
HEAD RELAY
10A H-LP LH (LWR)
10A H-LP RH (LWR)
H 2 HEADLIGHT LH (LO)
H 4 HEADLIGHT LH (LO)
DRL NO.2 RELAY
5A DRL NO. 2
DRL NO.4 RELAY
DRL NO.3 RELAY
15A HEAD (LH)
15A HEAD (RH)
H-1 HEADLIGHT LH (H1)
H 3 HEADLIGHT RH (H1)
C 9 HIGH BEAM INDICATOR LIGHT [COMB. METER]
J10 JUNCTION CONNECTOR
J20 J21 JUNCTION CONNECTOR
J15 JUNCTION CONNECTOR
J18 J19 JUNCTION CONNECTOR
I15 INTEGRATION RELAY
DIMMER SW
LIGHT CONTROL SW
OFF
TAIL
HEAD
LOW
HIGH
FLASH
J 8 J 9
E4
E2
E1
E3
E5
E6
E7
E8
E9
E10
E11
E12
E13
E14
E15
E16
E17
E18
E19
E20
E21
E22
E23
E24
E25
E26
E27
E28
E29
E30
E31
E32
E33
E34
E35
E36
E37
E38
E39
E40
E41
E42
E43
E44
E45
E46
E47
E48
E49
E50
E51
E52
E53
E54
E55
E56
E57
E58
E59
E60
E61
E62
E63
E64
E65
E66
E67
E68
E69
E70
E71
E72
E73
E74
E75
E76
E77
E78
E79
E80
E81
E82
E83
E84
E85
E86
E87
E88
E89
E90
E91
E92
E93
E94
E95
E96
E97
E98
E99
E100
E101
E102
E103
E104
E105
E106
E107
E108
E109
E110
E111
E112
E113
E114
E115
E116
E117
E118
E119
E120
E121
E122
E123
E124
E125
E126
E127
E128
E129
E130
E131
E132
E133
E134
E135
E136
E137
E138
E139
E140
E141
E142
E143
E144
E145
E146
E147
E148
E149
E150
E151
E152
E153
E154
E155
E156
E157
E158
E159
E160
E161
E162
E163
E164
E165
E166
E167
E168
E169
E170
E171
E172
E173
E174
E175
E176
E177
E178
E179
E180
E181
E182
E183
E184
E185
E186
E187
E188
E189
E190
E191
E192
E193
E194
E195
E196
E197
E198
E199
E200
E201
E202
E203
E204
E205
E206
E207
E208
E209
E210
E211
E212
E213
E214
E215
E216
E217
E218
E219
E220
E221
E222
E223
E224
E225
E226
E227
E228
E229
E230
E231
E232
E233
E234
E235
E236
E237
E238
E239
E240
E241
E242
E243
E244
E245
E246
E247
E248
E249
E250
E251
E252
E253
E254
E255
E256
E257
E258
E259
E260
E261
E262
E263
E264
E265
E266
E267
E268
E269
E270
E271
E272
E273
E274
E275
E276
E277
E278
E279
E280
E281
E282
E283
E284
E285
E286
E287
E288
E289
E290
E291
E292
E293
E294
E295
E296
E297
E298
E299
E300
E301
E302
E303
E304
E305
E306
E307
E308
E309
E310
E311
E312
E313
E314
E315
E316
E317
E318
E319
E320
E321
E322
E323
E324
E325
E326
E327
E328
E329
E330
E331
E332
E333
E334
E335
E336
E337
E338
E339
E340
E341
E342
E343
E344
E345
E346
E347
E348
E349
E350
E351
E352
E353
E354
E355
E356
E357
E358
E359
E360
E361
E362
E363
E364
E365
E366
E367
E368
E369
E370
E371
E372
E373
E374
E375
E376
E377
E378
E379
E380
E381
E382
E383
E384
E385
E386
E387
E388
E389
E390
E391
E392
E393
E394
E395
E396
E397
E398
E399
E400
E401
E402
E403
E404
E405
E406
E407
E408
E409
E410
E411
E412
E413
E414
E415
E416
E417
E418
E419
E420
E421
E422
E423
E424
E425
E426
E427
E428
E429
E430
E431
E432
E433
E434
E435
E436
E437
E438
E439
E440
E441
E442
E443
E444
E445
E446
E447
E448
E449
E450
E451
E452
E453
E454
E455
E456
E457
E458
E459
E460
E461
E462
E463
E464
E465
E466
E467
E468
E469
E470
E471
E472
E473
E474
E475
E476
E477
E478
E479
E480
E481
E482
E483
E484
E485
E486
E487
E488
E489
E490
E491
E492
E493
E494
E495
E496
E497
E498
E499
E500
E501
E502
E503
E504
E505
E506
E507
E508
E509
E510
E511
E512
E513
E514
E515
E516
E517
E518
E519
E520
E521
E522
E523
E524
E525
E526
E527
E528
E529
E530
E531
E532
E533
E534
E535
E536
E537
E538
E539
E540
E541
E542
E543
E544
E545
E546
E547
E548
E549
E550
E551
E552
E553
E554
E555
E556
E557
E558
E559
E560
E561
E562
E563
E564
E565
E566
E567
E568
E569
E570
E571
E572
E573
E574
E575
E576
E577
E578
E579
E580
E581
E582
E583
E584
E585
E586
E587
E588
E589
E590
E591
E592
E593
E594
E595
E596
E597
E598
E599
E600
E601
E602
E603
E604
E605
E606
E607
E608
E609
E610
E611
E612
E613
E614
E615
E616
E617
E618
E619
E620
E621
E622
E623
E624
E625
E626
E627
E628
E629
E630
E631
E632
E633
E634
E635
E636
E637
E638
E639
E640
E641
E642
E643
E644
E645
E646
E647
E648
E649
E650
E651
E652
E653
E654
E655
E656
E657
E658
E659
E660
E661
E662
E663
E664
E665
E666
E667
E668
E669
E670
E671
E672
E673
E674
E675
E676
E677
E678
E679
E680
E681
E682
E683
E684
E685
E686
E687
E688
E689
E690
E691
E692
E693
E694
E695
E696
E697
E698
E699
E700
E701
E702
E703
E704
E705
E706
E707
E708
E709
E710
E711
E712
E713
E714
E715
E716
E717
E718
E719
E720
E721
E722
E723
E724
E725
E726
E727
E728
E729
E730
E731
E732
E733
E734
E735
E736
E737
E738
E739
E740
E741
E742
E743
E744
E745
E746
E747
E748
E749
E750
E751
E752
E753
E754
E755
E756
E757
E758
E759
E760
E761
E762
E763
E764
E765
E766
E767
E768
E769
E770
E771
E772
E773
E774
E775
E776
E777
E778
E779
E780
E781
E782
E783
E784
E785
E786
E787
E788
E789
E790
E791
E792
E793
E794
E795
E796
E797
E798
E799
E800
E801
E802
E803
E804
E805
E806
E807
E808
E809
E810
E811
E812
E813
E814
E815
E816
E817
E818
E819
E820
E821
E822
E823
E824
E825
E826
E827
E828
E829
E830
E831
E832
E833
E834
E835
E836
E837
E838
E839
E840
E841
E842
E843
E844
E845
E846
E847
E848
E849
E850
E851
E852
E853
E854
E855
E856
E857
E858
E859
E860
E861
E862
E863
E864
E865
E866
E867
E868
E869
E870
E871
E872
E873
E874
E875
E876
E877
E878
E879
E880
E881
E882
E883
E884
E885
E886
E887
E888
E889
E890
E891
E892
E893
E894
E895
E896
E897
E898
E899
E900
E901
E902
E903
E904
E905
E906
E907
E908
E909
E910
E911
E912
E913
E914
E915
E916
E917
E918
E919
E920
E921
E922
E923
E924
E925
E926
E927
E928
E929
E930
E931
E932
E933
E934
E935
E936
E937
E938
E939
E940
E941
E942
E943
E944
E945
E946
E947
E948
E949
E950
E951
E952
E953
E954
E955
E956
E957
E958
E959
E960
E961
E962
E963
E964
E965
E966
E967
E968
E969
E970
E971
E972
E973
E974
E975
E976
E977
E978
E979
E980
E981
E982
E983
E984
E985
E986
E987
E988
E989
E990
E991
E992
E993
E994
E995
E996
E997
E998
E999
E1000

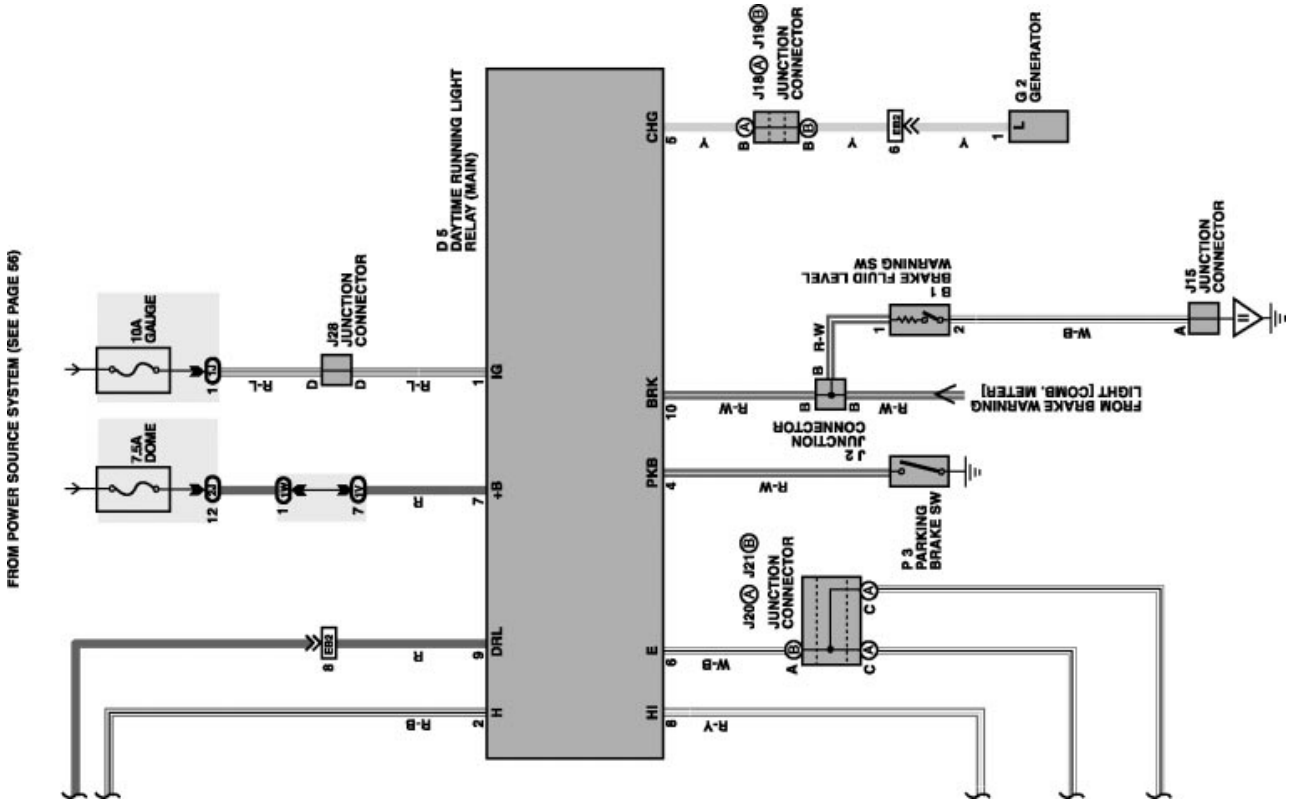
FROM POWER SOURCE SYSTEM (SEE PAGE 56)
10A GAUGE
7.5A DOME
J28 JUNCTION CONNECTOR
D 5 DAYTIME RUNNING LIGHT RELAY (MAIN)
J18 J19 JUNCTION CONNECTOR
G 2 GENERATOR
B 1 BRAKE FLUID LEVEL WARNING SW
J15 JUNCTION CONNECTOR
FROM BRAKE WARNING LIGHT [COMB. METER]
J 2 JUNCTION CONNECTOR
P 3 PARKING BRAKE SW
J20 J21 JUNCTION CONNECTOR
IG
+B
DRL
H
CHG
BRK
PKB
E
HI
R-L
R
R-B
R-W
W-B
R-Y
Y

Step 4: Isolate the Trouble

1. On the System Circuit Diagram, **circle the possible problem areas.**

2. List the first 2 items you will inspect. Mark the **type of inspection** (visual, voltmeter, ohmmeter, ammeter or jumper wire) and write in the **inspection item** (component, connector with pin numbers, wire color, etc.)

3. List the **specifications**, the **measured result** and **your diagnosis** in the appropriate column.

4. If the initial checks lead you to make **additional inspections**, list them in the shaded area.

Inspection Type	Inspection Item	Specification	Measured Result	OK or Bad
❑ Visual ❑ Voltmeter ❑ Ohmmeter ❑ Ammeter ❑ Jumper Wire				
❑ Visual ❑ Voltmeter ❑ Ohmmeter ❑ Ammeter ❑ Jumper Wire				
❑ Visual ❑ Voltmeter ❑ Ohmmeter ❑ Ammeter ❑ Jumper Wire				
❑ Visual ❑ Voltmeter ❑ Ohmmeter ❑ Ammeter ❑ Jumper Wire				
❑ Visual ❑ Voltmeter ❑ Ohmmeter ❑ Ammeter ❑ Jumper Wire				
❑ Visual ❑ Voltmeter ❑ Ohmmeter ❑ Ammeter ❑ Jumper Wire				
❑ Visual ❑ Voltmeter ❑ Ohmmeter ❑ Ammeter ❑ Jumper Wire				
❑ Visual ❑ Voltmeter ❑ Ohmmeter ❑ Ammeter ❑ Jumper Wire				

Step 5: Correct the Trouble

Cause of problem and location:	**Instructor OK**

Step 6: Check for Proper Operation

❑ Re-test the system/circuit to verify the repair

ES 300 Body Electrical Simulator - Fault Switch #1

Name: _____ Date: _____

Review this sheet as you are doing the *ES 300 Body Electrical Simulator - Fault Switch #1* worksheet. Check each category after viewing the instructor's presentation and completing the worksheet. Ask the instructor if you have questions regarding the topics provided below. Additional space is provided under topic for you to list any other concerns that you would like your instructor to address. The comments section is provided for your personal comments, information, questions, etc.

I have questions

I know I can

Topic			Comment

Notes

WORKSHEET 5-3
ES 300 Body Electrical Simulator - Fault Switch #2

Vehicle	Year/Prod. Date	Engine	Transmission

Problem Description: **HORN DOES NOT WORK**

❑ **Problem Found** (check one): ❑ **Intermittent** ❑ **Continuous**

❑ **No Problem Found**—Operation is normal.

Explanation: _____

Step 2: Determine the Related Symptoms

1. Using the EWD, read the System Outline to see how the circuit is supposed to operate (if available).

2. Determine if it affects **ALL** or **PART** of the circuit.

   - **If all of the circuit is affected** check the operation of circuits which have common fuse/power sources and also circuits which use common grounding points.
   - **If only part(s) of the circuit** is affected, determine exactly which parts are OK and which are inoperative.

Circuit	OK or Bad	Observations

Step 3: Analyze the Symptoms

1. Based upon the original complaint, and your related symptoms checks, specifically identify the problem:

   _____

2. *On the following System Circuit Diagram:* Based upon your related symptom checks, use a highlighter to **trace current flow in the parts of the circuit that are OK.**

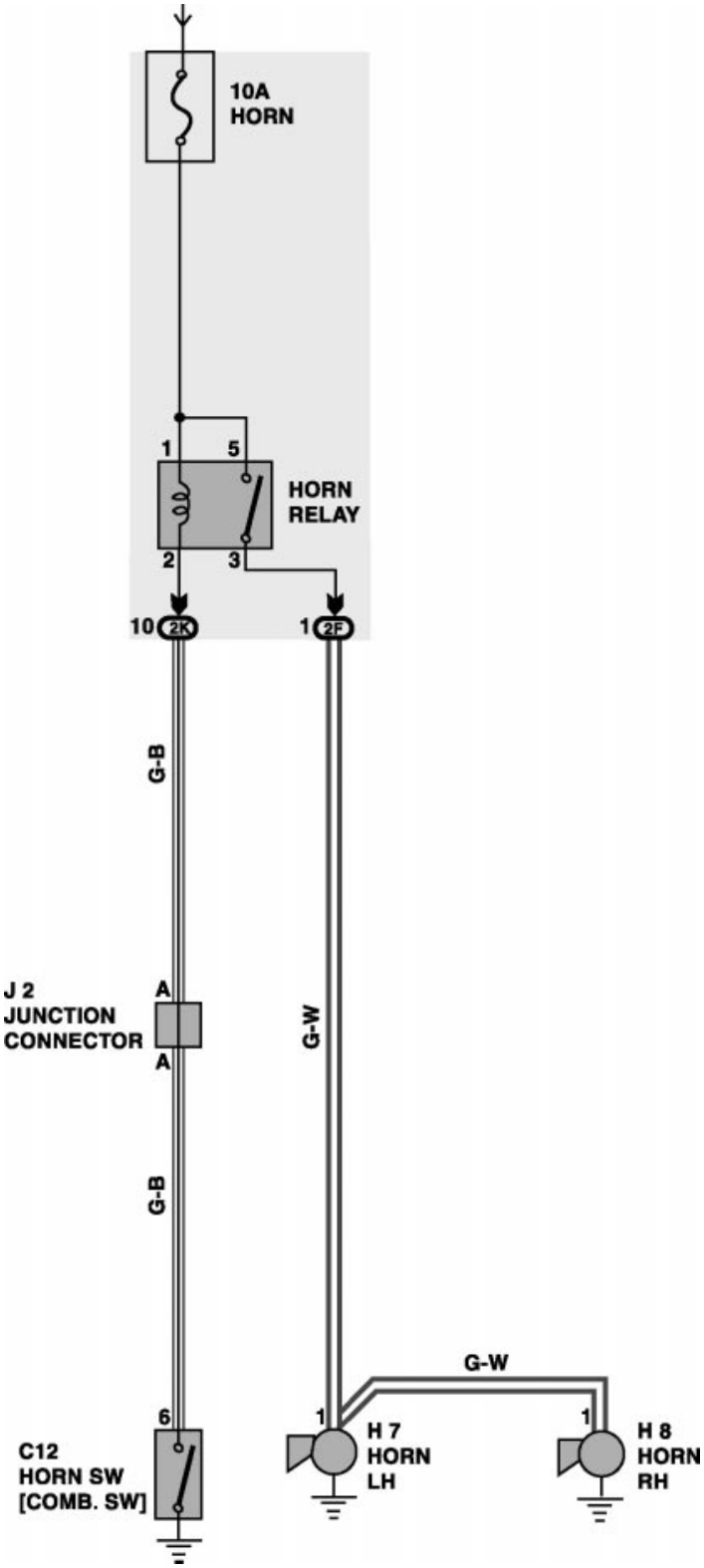
10A
HORN
1
5
HORN
RELAY
2
3
10
2K
1
2F
G-B
J 2
JUNCTION
CONNECTOR
A
A
G-W
G-B
G-W
6
1
1
C12
HORN SW
[COMB. SW]
H 7
HORN
LH
H 8
HORN
RH

Step 4: Isolate the Trouble

1. On the System Circuit Diagram, **circle the possible problem areas.**

2. List the first 2 items you will inspect. Mark the **type of inspection** (visual, voltmeter, ohmmeter, ammeter or jumper wire) and write in the **inspection item** (component, connector with pin numbers, wire color, etc.)

3. List the **specifications**, the **measured result** and **your diagnosis** in the appropriate column.

4. If the initial checks lead you to make **additional inspections**, list them in the shaded area.

Inspection Type	Inspection Item	Specification	Measured Result	OK or Bad
❑ Visual ❑ Voltmeter ❑ Ohmmeter ❑ Ammeter ❑ Jumper Wire				
❑ Visual ❑ Voltmeter ❑ Ohmmeter ❑ Ammeter ❑ Jumper Wire				
❑ Visual ❑ Voltmeter ❑ Ohmmeter ❑ Ammeter ❑ Jumper Wire				
❑ Visual ❑ Voltmeter ❑ Ohmmeter ❑ Ammeter ❑ Jumper Wire				
❑ Visual ❑ Voltmeter ❑ Ohmmeter ❑ Ammeter ❑ Jumper Wire				
❑ Visual ❑ Voltmeter ❑ Ohmmeter ❑ Ammeter ❑ Jumper Wire				
❑ Visual ❑ Voltmeter ❑ Ohmmeter ❑ Ammeter ❑ Jumper Wire				
❑ Visual ❑ Voltmeter ❑ Ohmmeter ❑ Ammeter ❑ Jumper Wire				

Step 5: Correct the Trouble

Cause of problem and location:	**Instructor OK**

Step 6: Check for Proper Operation

❑ Re-test the system/circuit to verify the repair

Notes

ES 300 Body Electrical Simulator - Fault Switch #2

Name: _____ Date: _____

Review this sheet as you are doing the *ES 300 Body Electrical Simulator - Fault Switch #2* worksheet. Check each category after viewing the instructor's presentation and completing the worksheet. Ask the instructor if you have questions regarding the topics provided below. Additional space is provided under topic for you to list any other concerns that you would like your instructor to address. The comments section is provided for your personal comments, information, questions, etc.

I have questions

I know I can

Topic			Comment

Notes

WORKSHEET 5-4
ES 300 Body Electrical Simulator - Fault Switch #3

Vehicle	Year/Prod. Date	Engine	Transmission

Problem Description: **DOOR LOCKS INOPERATIVE**

❑ **Problem Found** (check one): ❑ **Intermittent** ❑ **Continuous**

❑ **No Problem Found**—Operation is normal.

Explanation: _____

Step 2: Determine the Related Symptoms

1. Using the EWD, read the System Outline to see how the circuit is supposed to operate (if available).

2. Determine if it affects **ALL** or **PART** of the circuit.

   - **If all of the circuit is affected** check the operation of circuits which have common fuse/power sources and also circuits which use common grounding points.
   - **If only part(s) of the circuit** is affected, determine exactly which parts are OK and which are inoperative.

Circuit	OK or Bad	Observations

Step 3: Analyze the Symptoms

1. Based upon the original complaint, and your related symptoms checks, specifically identify the problem:

   _____

2. *On the following System Circuit Diagram:* Based upon your related symptom checks, use a highlighter to **trace current flow in the parts of the circuit that are OK.**

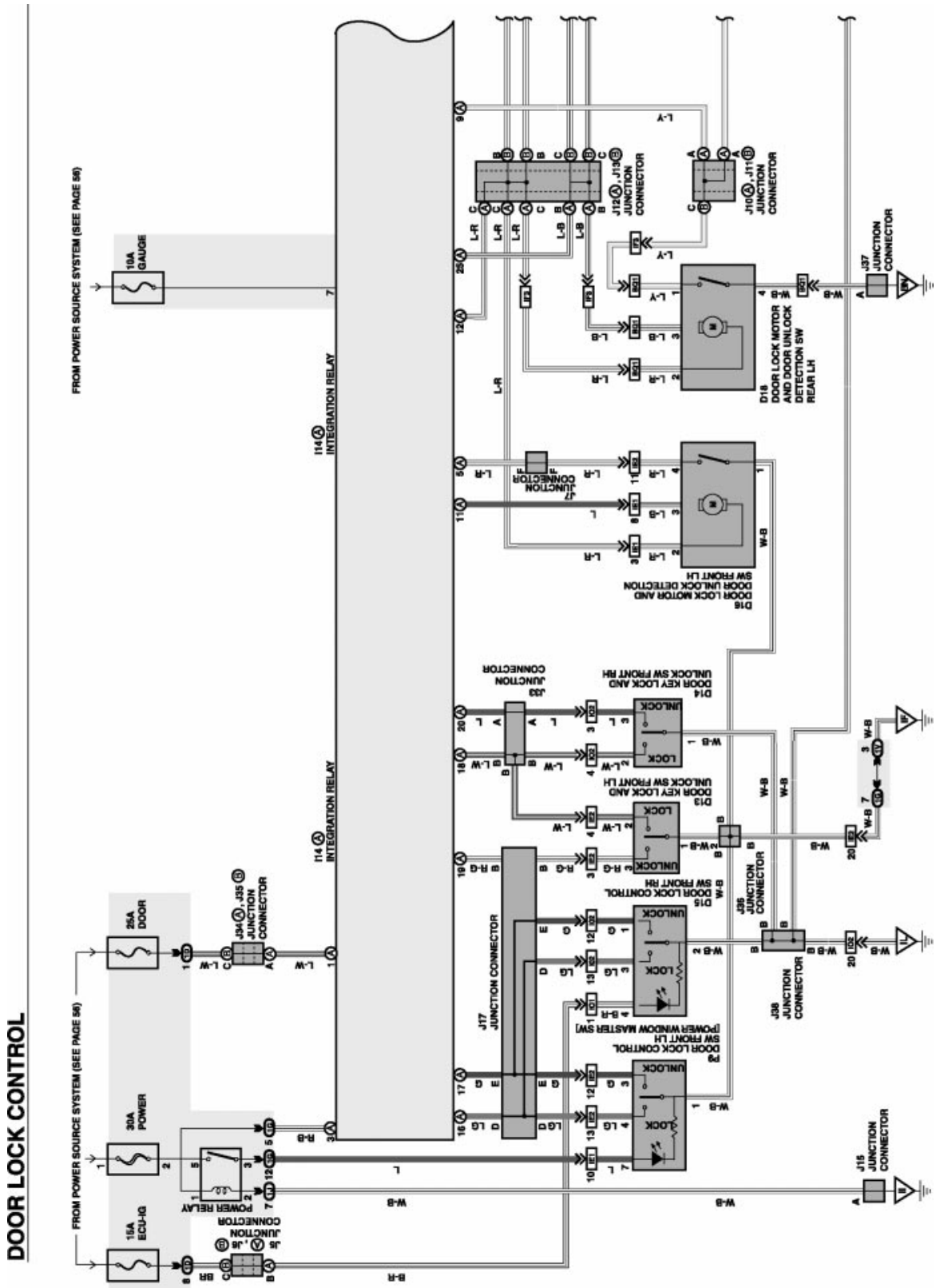
DOOR LOCK CONTROL
FROM POWER SOURCE SYSTEM (SEE PAGE 56)
15A ECU-IG
30A POWER
25A DOOR
10A GAUGE
J5 , J6 JUNCTION CONNECTOR
POWER RELAY
J34 , J35 JUNCTION CONNECTOR
I14 INTEGRATION RELAY
J17 JUNCTION CONNECTOR
D18 DOOR LOCK MOTOR AND DOOR UNLOCK DETECTION SW REAR LH
D16 DOOR LOCK MOTOR AND DOOR UNLOCK DETECTION SW FRONT LH
J7 JUNCTION CONNECTOR
D14 DOOR KEY LOCK AND UNLOCK SW FRONT RH
D13 DOOR KEY LOCK AND UNLOCK SW FRONT LH
J33 JUNCTION CONNECTOR
D15 DOOR LOCK CONTROL SW FRONT RH
P9 DOOR LOCK CONTROL SW FRONT LH (POWER WINDOW MASTER SW)
J12 , J13 JUNCTION CONNECTOR
J10 , J11 JUNCTION CONNECTOR
J36 JUNCTION CONNECTOR
J38 JUNCTION CONNECTOR
J37 JUNCTION CONNECTOR
J15 JUNCTION CONNECTOR
LOCK
UNLOCK

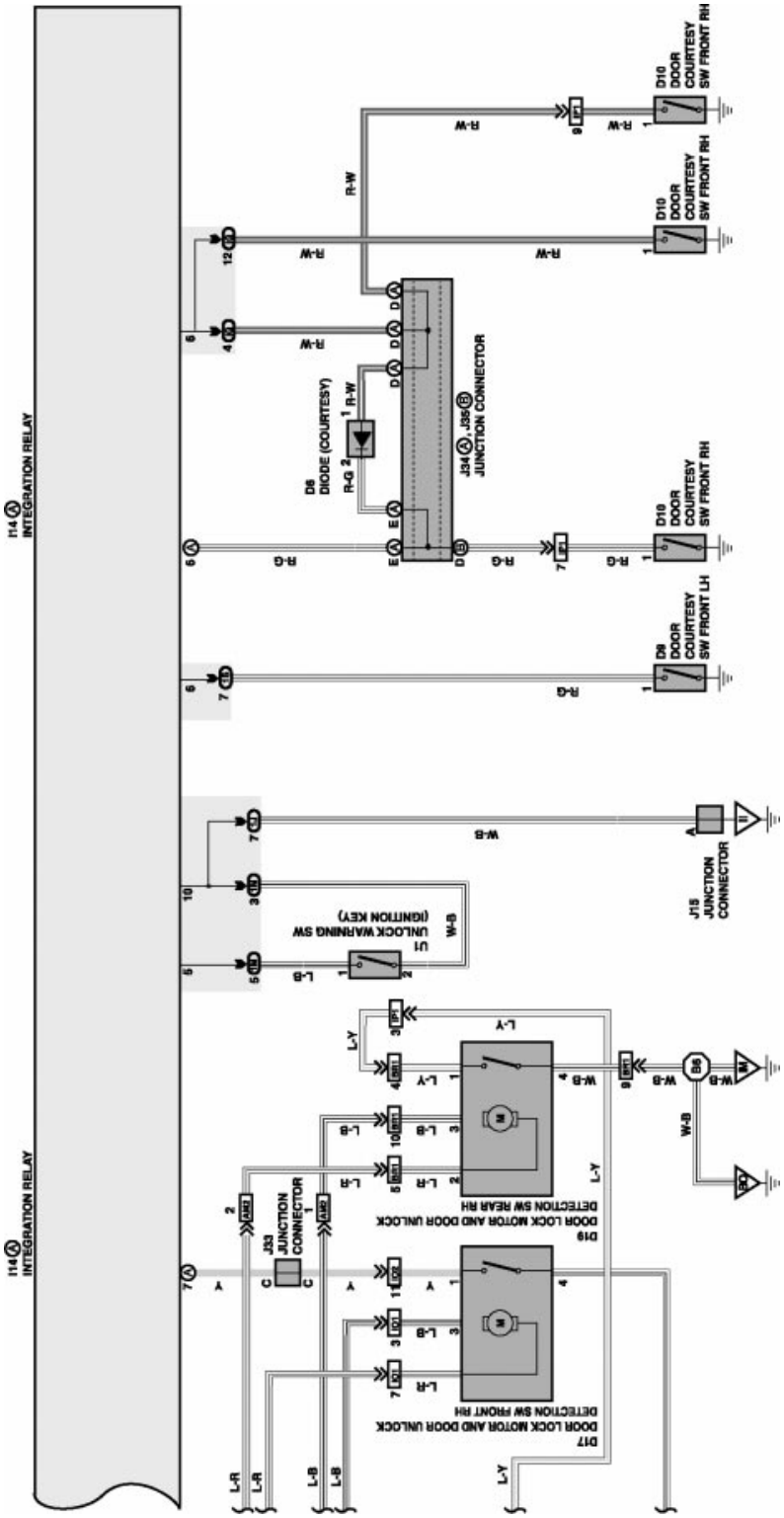
I14 INTEGRATION RELAY
I14 INTEGRATION RELAY
D10 DOOR COURTESY SW FRONT RH
D10 DOOR COURTESY SW FRONT RH
D10 DOOR COURTESY SW FRONT RH
D9 DOOR COURTESY SW FRONT LH
D8 DIODE (COURTESY)
J34 J35 JUNCTION CONNECTOR
J15 JUNCTION CONNECTOR
U1 UNLOCK WARNING SW (IGNITION KEY)
D19 DOOR LOCK MOTOR AND DOOR UNLOCK DETECTION SW REAR RH
D17 DOOR LOCK MOTOR AND DOOR UNLOCK DETECTION SW FRONT RH
J33 JUNCTION CONNECTOR
R-W
R-G
W-B
L-Y
L-R
L-B

Step 4: Isolate the Trouble

1. On the System Circuit Diagram, **circle the possible problem areas.**

2. List the first 2 items you will inspect. Mark the **type of inspection** (visual, voltmeter, ohmmeter, ammeter or jumper wire) and write in the **inspection item** (component, connector with pin numbers, wire color, etc.)

3. List the **specifications**, the **measured result** and **your diagnosis** in the appropriate column.

4. If the initial checks lead you to make **additional inspections**, list them in the shaded area.

Inspection Type	Inspection Item	Specification	Measured Result	OK or Bad
❑ Visual ❑ Voltmeter ❑ Ohmmeter ❑ Ammeter ❑ Jumper Wire				
❑ Visual ❑ Voltmeter ❑ Ohmmeter ❑ Ammeter ❑ Jumper Wire				
❑ Visual ❑ Voltmeter ❑ Ohmmeter ❑ Ammeter ❑ Jumper Wire				
❑ Visual ❑ Voltmeter ❑ Ohmmeter ❑ Ammeter ❑ Jumper Wire				
❑ Visual ❑ Voltmeter ❑ Ohmmeter ❑ Ammeter ❑ Jumper Wire				
❑ Visual ❑ Voltmeter ❑ Ohmmeter ❑ Ammeter ❑ Jumper Wire				
❑ Visual ❑ Voltmeter ❑ Ohmmeter ❑ Ammeter ❑ Jumper Wire				
❑ Visual ❑ Voltmeter ❑ Ohmmeter ❑ Ammeter ❑ Jumper Wire				

Step 5: Correct the Trouble

Cause of problem and location:	**Instructor OK**

Step 6: Check for Proper Operation

❑ Re-test the system/circuit to verify the repair

ES 300 Body Electrical Simulator - Fault Switch #3

Name: _____ Date: _____

Review this sheet as you are doing the *ES 300 Body Electrical Simulator - Fault Switch #3* worksheet. Check each category after viewing the instructor's presentation and completing the worksheet. Ask the instructor if you have questions regarding the topics provided below. Additional space is provided under topic for you to list any other concerns that you would like your instructor to address. The comments section is provided for your personal comments, information, questions, etc.

I have questions

I know I can

Topic			Comment

Notes

WORKSHEET 5-5
ES 300 Body Electrical Simulator - Fault Switch #4

Vehicle	Year/Prod. Date	Engine	Transmission

Problem Description: **FRONT DOOR LOCKS DON'T WORK**

❑ **Problem Found** (check one): ❑ **Intermittent** ❑ **Continuous**

❑ **No Problem Found**—Operation is normal.

Explanation: _____

Step 2: Determine the Related Symptoms

1. Using the EWD, read the System Outline to see how the circuit is supposed to operate (if available).

2. Determine if it affects **ALL** or **PART** of the circuit.

   - **If all of the circuit is affected** check the operation of circuits which have common fuse/power sources and also circuits which use common grounding points.
   - **If only part(s) of the circuit** is affected, determine exactly which parts are OK and which are inoperative.

Circuit	OK or Bad	Observations

Step 3: Analyze the Symptoms

1. Based upon the original complaint, and your related symptoms checks, specifically identify the problem:

   _____

2. *On the following System Circuit Diagram:* Based upon your related symptom checks, use a highlighter to **trace current flow in the parts of the circuit that are OK.**

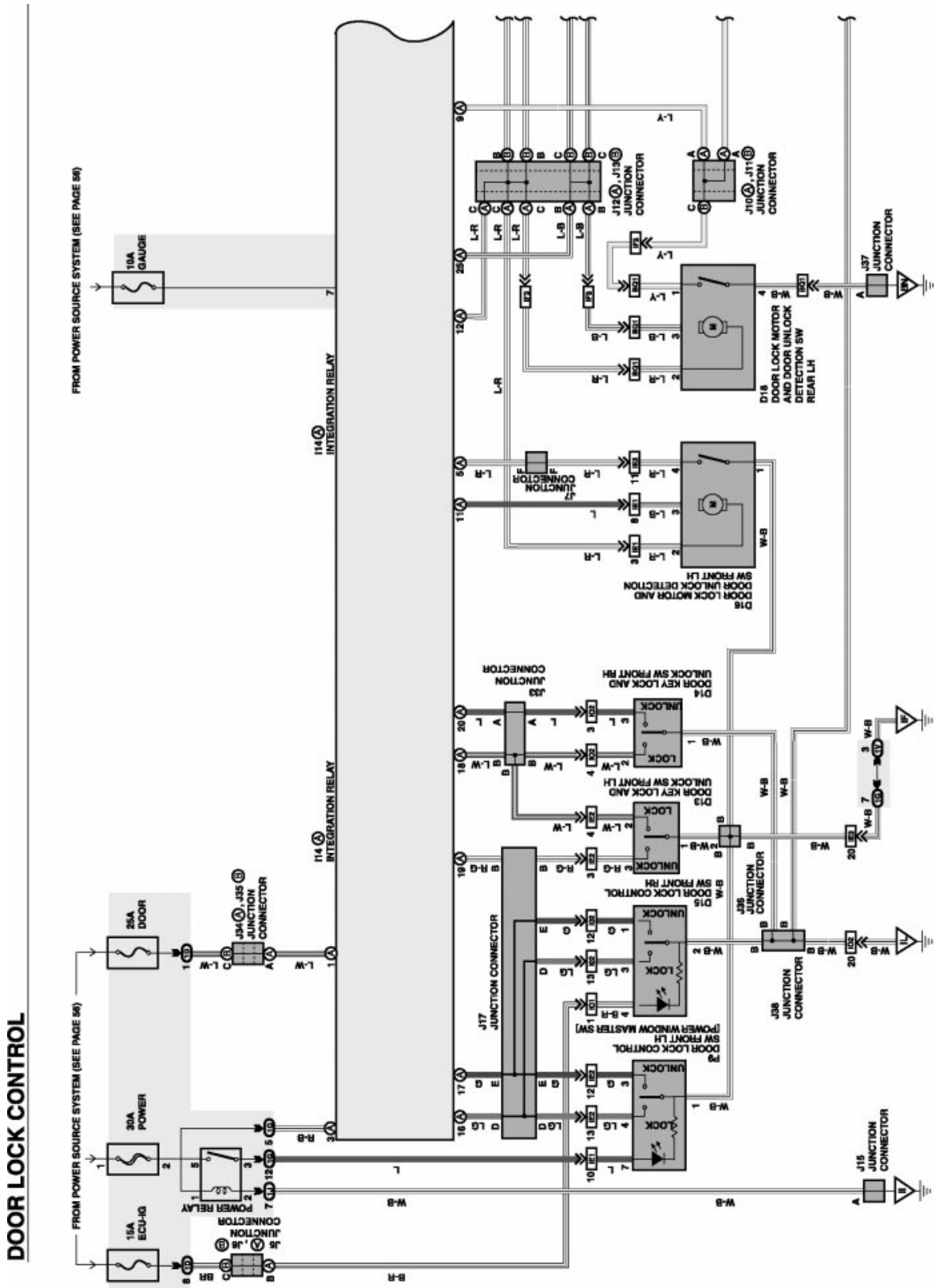
DOOR LOCK CONTROL
FROM POWER SOURCE SYSTEM (SEE PAGE 56)
15A ECU-IG
30A POWER
25A DOOR
10A GAUGE
J5 , J6 JUNCTION CONNECTOR
POWER RELAY
J34 , J35 JUNCTION CONNECTOR
I14 INTEGRATION RELAY
J17 JUNCTION CONNECTOR
P9 DOOR LOCK CONTROL SW FRONT LH POWER WINDOW MASTER SW
D15 DOOR LOCK CONTROL SW FRONT RH
D13 DOOR KEY LOCK AND UNLOCK SW FRONT LH
D14 DOOR KEY LOCK AND UNLOCK SW FRONT RH
J33 JUNCTION CONNECTOR
D16 DOOR LOCK MOTOR AND DOOR UNLOCK DETECTION SW FRONT LH
J7 JUNCTION CONNECTOR
D18 DOOR LOCK MOTOR AND DOOR UNLOCK DETECTION SW REAR LH
J12 , J13 JUNCTION CONNECTOR
J10 , J11 JUNCTION CONNECTOR
J35 JUNCTION CONNECTOR
J36 JUNCTION CONNECTOR
J37 JUNCTION CONNECTOR
J15 JUNCTION CONNECTOR
LOCK
UNLOCK

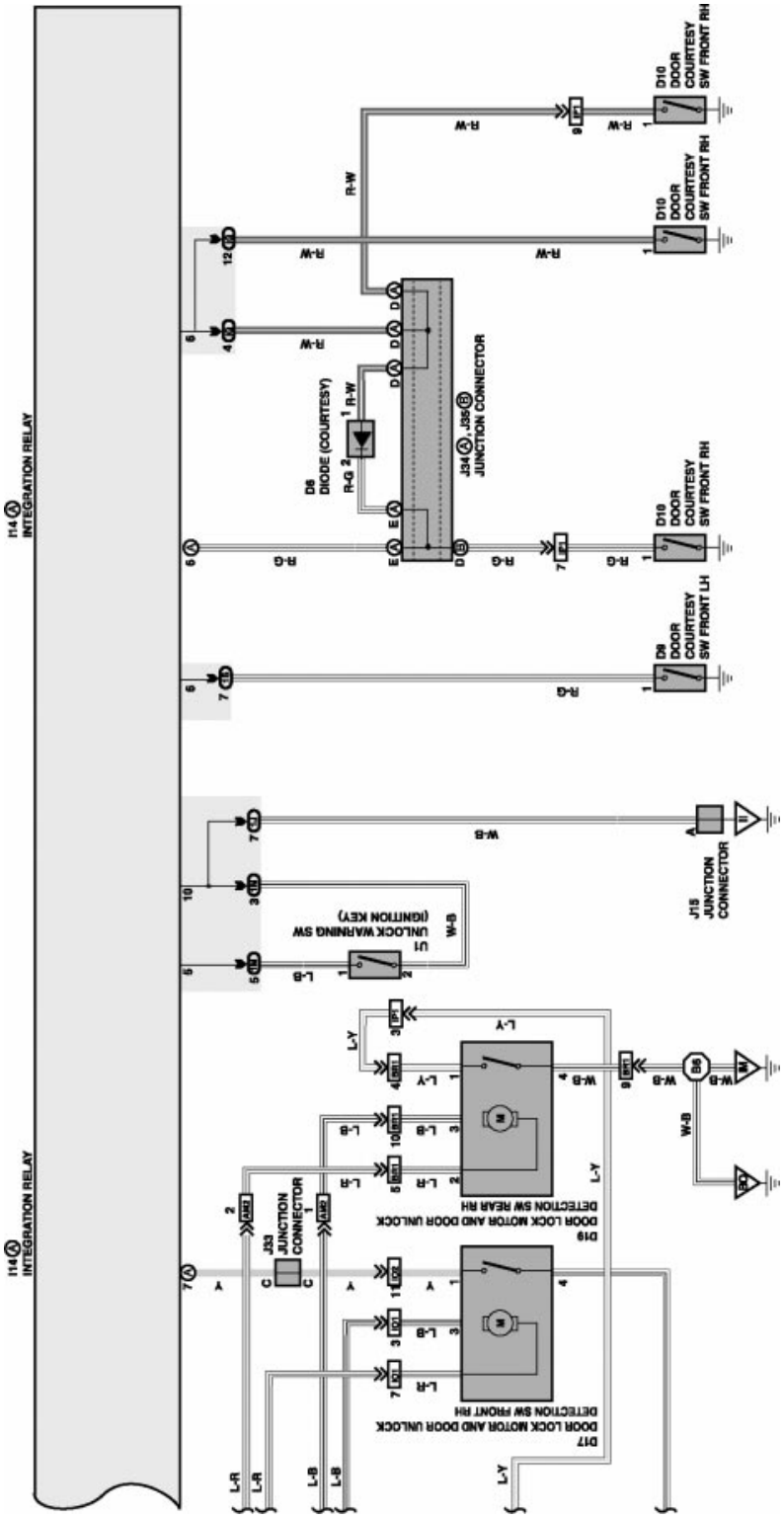
I14 INTEGRATION RELAY
I14 INTEGRATION RELAY
D10 DOOR COURTESY SW FRONT RH
D10 DOOR COURTESY SW FRONT RH
D10 DOOR COURTESY SW FRONT RH
D9 DOOR COURTESY SW FRONT LH
D8 DIODE (COURTESY)
J34 J35 JUNCTION CONNECTOR
U1 UNLOCK WARNING SW (IGNITION KEY)
J15 JUNCTION CONNECTOR
J33 JUNCTION CONNECTOR
D19 DOOR LOCK MOTOR AND DOOR UNLOCK DETECTION SW REAR RH
D17 DOOR LOCK MOTOR AND DOOR UNLOCK DETECTION SW FRONT RH
R-W
R-G
W-B
L-Y
L-R
L-B

Step 4: Isolate the Trouble

1. On the System Circuit Diagram, **circle the possible problem areas.**

2. List the first 2 items you will inspect. Mark the **type of inspection** (visual, voltmeter, ohmmeter, ammeter or jumper wire) and write in the **inspection item** (component, connector with pin numbers, wire color, etc.)

3. List the **specifications**, the **measured result** and **your diagnosis** in the appropriate column.

4. If the initial checks lead you to make **additional inspections**, list them in the shaded area.

Inspection Type	Inspection Item	Specification	Measured Result	OK or Bad
❑ Visual ❑ Voltmeter ❑ Ohmmeter ❑ Ammeter ❑ Jumper Wire				
❑ Visual ❑ Voltmeter ❑ Ohmmeter ❑ Ammeter ❑ Jumper Wire				
❑ Visual ❑ Voltmeter ❑ Ohmmeter ❑ Ammeter ❑ Jumper Wire				
❑ Visual ❑ Voltmeter ❑ Ohmmeter ❑ Ammeter ❑ Jumper Wire				
❑ Visual ❑ Voltmeter ❑ Ohmmeter ❑ Ammeter ❑ Jumper Wire				
❑ Visual ❑ Voltmeter ❑ Ohmmeter ❑ Ammeter ❑ Jumper Wire				
❑ Visual ❑ Voltmeter ❑ Ohmmeter ❑ Ammeter ❑ Jumper Wire				
❑ Visual ❑ Voltmeter ❑ Ohmmeter ❑ Ammeter ❑ Jumper Wire				

Step 5: Correct the Trouble

Cause of problem and location:	**Instructor OK**

Step 6: Check for Proper Operation

❑ Re-test the system/circuit to verify the repair

ES 300 Body Electrical Simulator - Fault Switch #4

Name: _____ Date: _____

Review this sheet as you are doing the *ES 300 Body Electrical Simulator - Fault Switch #4* worksheet. Check each category after viewing the instructor's presentation and completing the worksheet. Ask the instructor if you have questions regarding the topics provided below. Additional space is provided under topic for you to list any other concerns that you would like your instructor to address. The comments section is provided for your personal comments, information, questions, etc.

I have questions

I know I can

Topic			Comment

Notes

WORKSHEET 5-6
ES 300 Body Electrical Simulator - Fault Switch #5

Vehicle	Year/Prod. Date	Engine	Transmission

Problem Description: **CD PLAYER INOP**

❑ **Problem Found** (check one): ❑ **Intermittent** ❑ **Continuous**

❑ **No Problem Found**—Operation is normal.

Explanation: _____

Step 2: Determine the Related Symptoms

1. Using the EWD, read the System Outline to see how the circuit is supposed to operate (if available).

2. Determine if it affects **ALL** or **PART** of the circuit.

   - **If all of the circuit is affected** check the operation of circuits which have common fuse/power sources and also circuits which use common grounding points.
   - **If only part(s) of the circuit** is affected, determine exactly which parts are OK and which are inoperative.

Circuit	OK or Bad	Observations

Step 3: Analyze the Symptoms

1. Based upon the original complaint, and your related symptoms checks, specifically identify the problem:

   _____

2. *On the following System Circuit Diagram:* Based upon your related symptom checks, use a highlighter to **trace current flow in the parts of the circuit that are OK.**

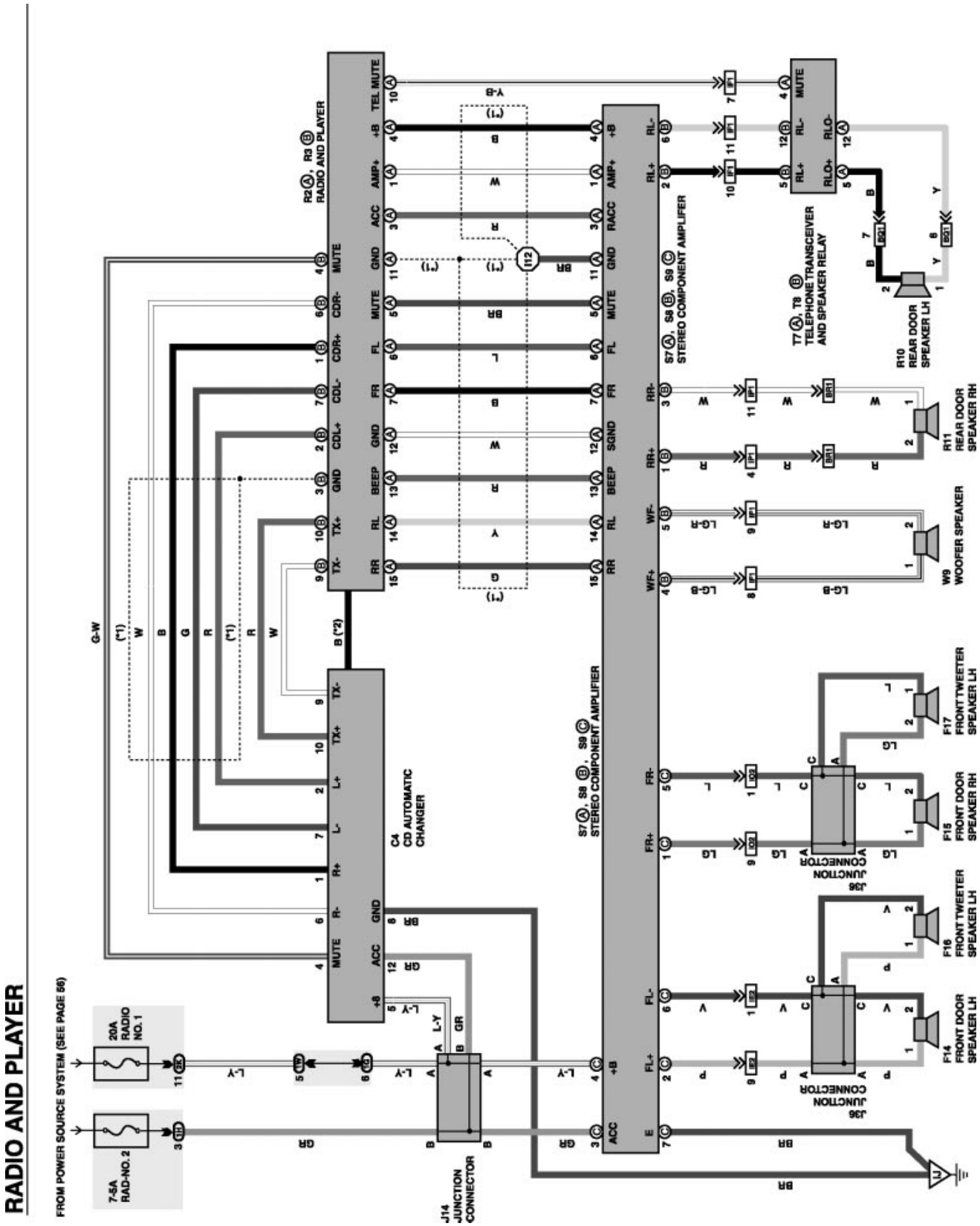
RADIO AND PLAYER
FROM POWER SOURCE SYSTEM (SEE PAGE 56)
20A RADIO NO. 1
7.5A RAD-NO. 2
R2 A, R3 B
RADIO AND PLAYER
C4
CD AUTOMATIC CHANGER
J14 JUNCTION CONNECTOR
S7 A, S8 B, S9 C
STEREO COMPONENT AMPLIFIER
T7 A, T8 B
TELEPHONE TRANSCEIVER AND SPEAKER RELAY
R10 REAR DOOR SPEAKER LH
R11 REAR DOOR SPEAKER RH
W9 WOOFER SPEAKER
F17 FRONT TWEETER SPEAKER LH
F15 FRONT DOOR SPEAKER RH
F16 FRONT TWEETER SPEAKER LH
F14 FRONT DOOR SPEAKER LH
J36 JUNCTION CONNECTOR

Step 4: Isolate the Trouble

1. On the System Circuit Diagram, **circle the possible problem areas.**

2. List the first 2 items you will inspect. Mark the **type of inspection** (visual, voltmeter, ohmmeter, ammeter or jumper wire) and write in the **inspection item** (component, connector with pin numbers, wire color, etc.)

3. List the **specifications**, the **measured result** and **your diagnosis** in the appropriate column.

4. If the initial checks lead you to make **additional inspections**, list them in the shaded area.

Inspection Type	Inspection Item	Specification	Measured Result	OK or Bad
❑ Visual ❑ Voltmeter ❑ Ohmmeter ❑ Ammeter ❑ Jumper Wire				
❑ Visual ❑ Voltmeter ❑ Ohmmeter ❑ Ammeter ❑ Jumper Wire				
❑ Visual ❑ Voltmeter ❑ Ohmmeter ❑ Ammeter ❑ Jumper Wire				
❑ Visual ❑ Voltmeter ❑ Ohmmeter ❑ Ammeter ❑ Jumper Wire				
❑ Visual ❑ Voltmeter ❑ Ohmmeter ❑ Ammeter ❑ Jumper Wire				
❑ Visual ❑ Voltmeter ❑ Ohmmeter ❑ Ammeter ❑ Jumper Wire				
❑ Visual ❑ Voltmeter ❑ Ohmmeter ❑ Ammeter ❑ Jumper Wire				
❑ Visual ❑ Voltmeter ❑ Ohmmeter ❑ Ammeter ❑ Jumper Wire				

Step 5: Correct the Trouble

Cause of problem and location:	**Instructor OK**

Step 6: Check for Proper Operation

❑ Re-test the system/circuit to verify the repair

Notes

ES 300 Body Electrical Simulator - Fault Switch #5

Name: _____ Date: _____

Review this sheet as you are doing the *ES 300 Body Electrical Simulator - Fault Switch #5* worksheet. Check each category after viewing the instructor's presentation and completing the worksheet. Ask the instructor if you have questions regarding the topics provided below. Additional space is provided under topic for you to list any other concerns that you would like your instructor to address. The comments section is provided for your personal comments, information, questions, etc.

I have questions

I know I can

Topic			Comment

Notes

WORKSHEET 5-7
ES 300 Body Electrical Simulator - Fault Switch #6

Vehicle	Year/Prod. Date	Engine	Transmission

Problem Description: **LEFT FRONT SPEAKER INOP**

❑ **Problem Found** (check one): ❑ **Intermittent** ❑ **Continuous**

❑ **No Problem Found**—Operation is normal.

Explanation: _____

Step 2: Determine the Related Symptoms

1. Using the EWD, read the System Outline to see how the circuit is supposed to operate (if available).

2. Determine if it affects **ALL** or **PART** of the circuit.

   - **If all of the circuit is affected** check the operation of circuits which have common fuse/power sources and also circuits which use common grounding points.
   - **If only part(s) of the circuit** is affected, determine exactly which parts are OK and which are inoperative.

Circuit	OK or Bad	Observations

Step 3: Analyze the Symptoms

1. Based upon the original complaint, and your related symptoms checks, specifically identify the problem:

   _____

2. *On the following System Circuit Diagram:* Based upon your related symptom checks, use a highlighter to **trace current flow in the parts of the circuit that are OK.**

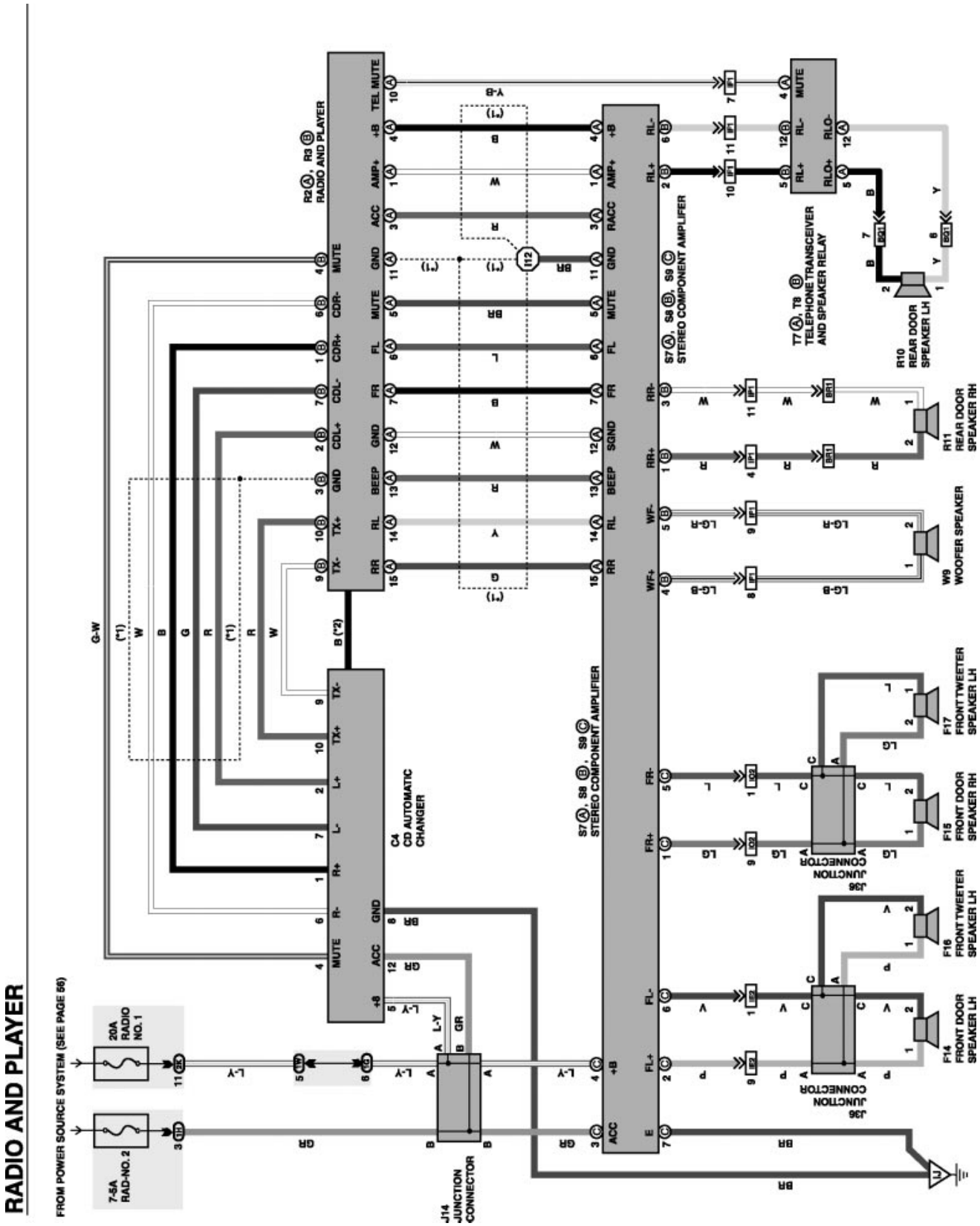
RADIO AND PLAYER
FROM POWER SOURCE SYSTEM (SEE PAGE 56)
20A RADIO NO. 1
7.5A RAD-NO. 2
R2 Ⓐ, R3 Ⓑ RADIO AND PLAYER
C4 CD AUTOMATIC CHANGER
J14 JUNCTION CONNECTOR
S7 Ⓐ, S8 Ⓑ, S9 Ⓒ STEREO COMPONENT AMPLIFIER
T7 Ⓐ, T8 Ⓑ TELEPHONE TRANSCEIVER AND SPEAKER RELAY
R10 REAR DOOR SPEAKER LH
R11 REAR DOOR SPEAKER RH
W9 WOOFER SPEAKER
F17 FRONT TWEETER SPEAKER LH
F15 FRONT DOOR SPEAKER RH
F16 FRONT TWEETER SPEAKER LH
F14 FRONT DOOR SPEAKER LH
J36 JUNCTION CONNECTOR

Step 4: Isolate the Trouble

1. On the System Circuit Diagram, **circle the possible problem areas.**

2. List the first 2 items you will inspect. Mark the **type of inspection** (visual, voltmeter, ohmmeter, ammeter or jumper wire) and write in the **inspection item** (component, connector with pin numbers, wire color, etc.)

3. List the **specifications**, the **measured result** and **your diagnosis** in the appropriate column.

4. If the initial checks lead you to make **additional inspections**, list them in the shaded area.

Inspection Type	Inspection Item	Specification	Measured Result	OK or Bad
❑ Visual ❑ Voltmeter ❑ Ohmmeter ❑ Ammeter ❑ Jumper Wire				
❑ Visual ❑ Voltmeter ❑ Ohmmeter ❑ Ammeter ❑ Jumper Wire				
❑ Visual ❑ Voltmeter ❑ Ohmmeter ❑ Ammeter ❑ Jumper Wire				
❑ Visual ❑ Voltmeter ❑ Ohmmeter ❑ Ammeter ❑ Jumper Wire				
❑ Visual ❑ Voltmeter ❑ Ohmmeter ❑ Ammeter ❑ Jumper Wire				
❑ Visual ❑ Voltmeter ❑ Ohmmeter ❑ Ammeter ❑ Jumper Wire				
❑ Visual ❑ Voltmeter ❑ Ohmmeter ❑ Ammeter ❑ Jumper Wire				
❑ Visual ❑ Voltmeter ❑ Ohmmeter ❑ Ammeter ❑ Jumper Wire				

Step 5: Correct the Trouble

Cause of problem and location:	**Instructor OK**

Step 6: Check for Proper Operation

❑ Re-test the system/circuit to verify the repair

Notes

ES 300 Body Electrical Simulator - Fault Switch #6

Name: _____ Date: _____

Review this sheet as you are doing the *ES 300 Body Electrical Simulator - Fault Switch #6* worksheet. Check each category after viewing the instructor's presentation and completing the worksheet. Ask the instructor if you have questions regarding the topics provided below. Additional space is provided under topic for you to list any other concerns that you would like your instructor to address. The comments section is provided for your personal comments, information, questions, etc.

I have questions

I know I can

Topic			Comment

Notes

WORKSHEET 5-8
ES 300 Body Electrical Simulator - Fault Switch #7

Vehicle	Year/Prod. Date	Engine	Transmission

Problem Description: **BATTERY GOES DEAD**

❑ **Problem Found** (check one): ❑ **Intermittent** ❑ **Continuous**

❑ **No Problem Found**—Operation is normal.

Explanation: _____

Step 2: Determine the Related Symptoms

1. Using the EWD, read the System Outline to see how the circuit is supposed to operate (if available).

2. Determine if it affects **ALL** or **PART** of the circuit.

   - **If all of the circuit is affected** check the operation of circuits which have common fuse/power sources and also circuits which use common grounding points.
   - **If only part(s) of the circuit** is affected, determine exactly which parts are OK and which are inoperative.

Circuit	OK or Bad	Observations

Step 3: Analyze the Symptoms

1. Based upon the original complaint, and your related symptoms checks, specifically identify the problem:

   _____

2. *On the following System Circuit Diagram:* Based upon your related symptom checks, use a highlighter to **trace current flow in the parts of the circuit that are OK.**

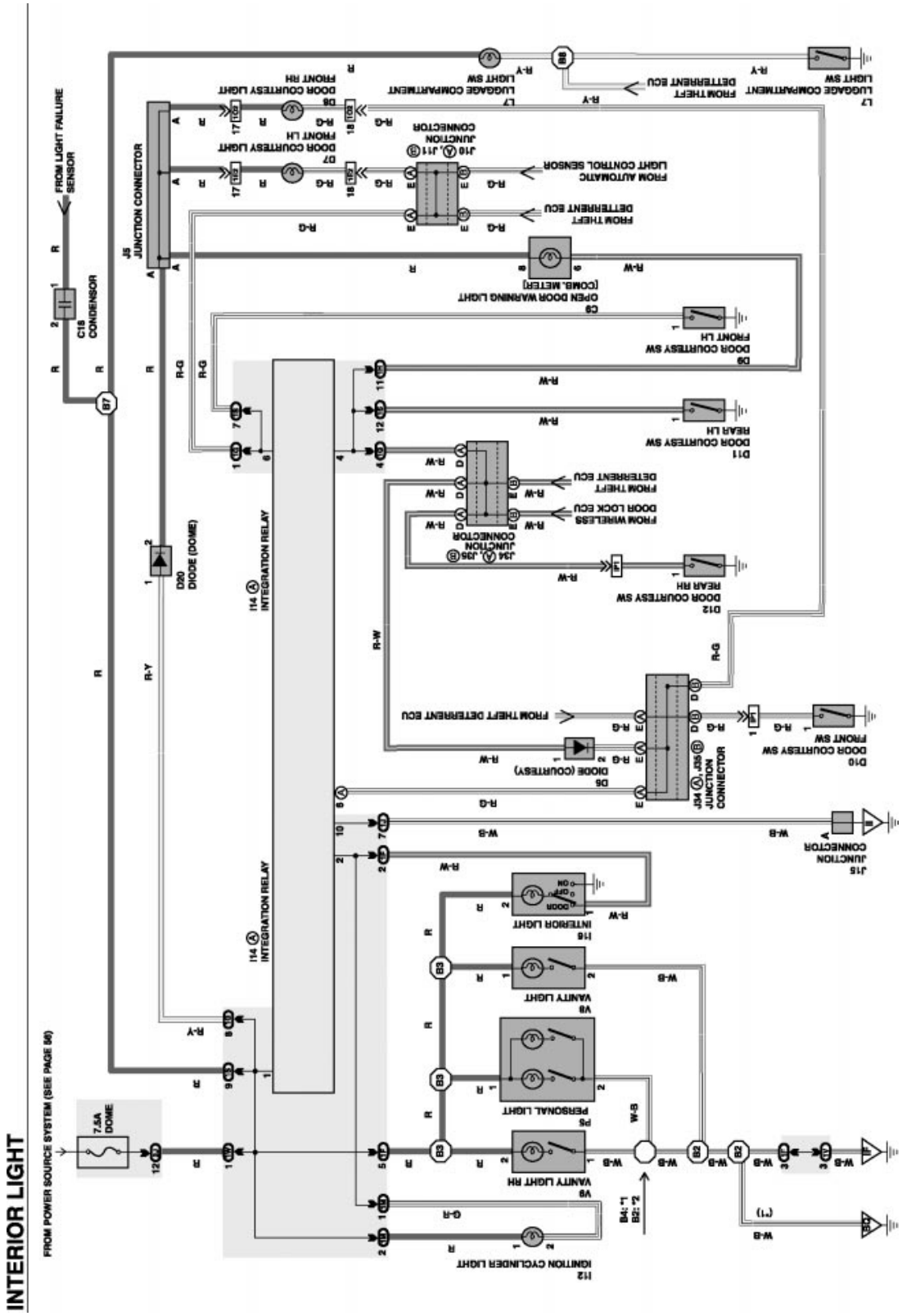
INTERIOR LIGHT
FROM POWER SOURCE SYSTEM (SEE PAGE 56)
7.5A DOME
I12 IGNITION CYCLINDER LIGHT
I14 INTEGRATION RELAY
I14 INTEGRATION RELAY
D20 DIODE (DOME)
C18 CONDENSOR
FROM LIGHT FAILURE SENSOR
J5 JUNCTION CONNECTOR
V9 VANITY LIGHT RH
P5 PERSONAL LIGHT
V8 VANITY LIGHT
I15 INTERIOR LIGHT
J15 JUNCTION CONNECTOR
J34 (A), J35 (B) JUNCTION CONNECTOR
D5 DIODE (COURTESY)
FROM THEFT DETERRENT ECU
D10 DOOR COURTESY SW FRONT SW
D12 DOOR COURTESY SW REAR RH
J34 (A), J35 (B) JUNCTION CONNECTOR
FROM WIRELESS DOOR LOCK ECU
FROM THEFT DETERRENT ECU
D11 DOOR COURTESY SW REAR LH
D9 DOOR COURTESY SW FRONT LH
C9 OPEN DOOR WARNING LIGHT (COMB. METER)
FROM THEFT DETERRENT ECU
FROM AUTOMATIC LIGHT CONTROL SENSOR
J10 (A), J11 (B) JUNCTION CONNECTOR
D7 DOOR COURTESY LIGHT FRONT LH
D8 DOOR COURTESY LIGHT FRONT RH
L7 LUGGAGE COMPARTMENT LIGHT SW
FROM THEFT DETERRENT ECU
L7 LUGGAGE COMPARTMENT LIGHT SW
B4: *1
B2: *2
(*1)

Step 4: Isolate the Trouble

1. On the System Circuit Diagram, **circle the possible problem areas.**

2. List the first 2 items you will inspect. Mark the **type of inspection** (visual, voltmeter, ohmmeter, ammeter or jumper wire) and write in the **inspection item** (component, connector with pin numbers, wire color, etc.)

3. List the **specifications**, the **measured result** and **your diagnosis** in the appropriate column.

4. If the initial checks lead you to make **additional inspections**, list them in the shaded area.

Inspection Type	Inspection Item	Specification	Measured Result	OK or Bad
❑ Visual ❑ Voltmeter ❑ Ohmmeter ❑ Ammeter ❑ Jumper Wire				
❑ Visual ❑ Voltmeter ❑ Ohmmeter ❑ Ammeter ❑ Jumper Wire				
❑ Visual ❑ Voltmeter ❑ Ohmmeter ❑ Ammeter ❑ Jumper Wire				
❑ Visual ❑ Voltmeter ❑ Ohmmeter ❑ Ammeter ❑ Jumper Wire				
❑ Visual ❑ Voltmeter ❑ Ohmmeter ❑ Ammeter ❑ Jumper Wire				
❑ Visual ❑ Voltmeter ❑ Ohmmeter ❑ Ammeter ❑ Jumper Wire				
❑ Visual ❑ Voltmeter ❑ Ohmmeter ❑ Ammeter ❑ Jumper Wire				
❑ Visual ❑ Voltmeter ❑ Ohmmeter ❑ Ammeter ❑ Jumper Wire				

Step 5: Correct the Trouble

Cause of problem and location:	**Instructor OK**

Step 6: Check for Proper Operation

❑ Re-test the system/circuit to verify the repair

Notes

ES 300 Body Electrical Simulator - Fault Switch #7

Name: _____ Date: _____

Review this sheet as you are doing the *ES 300 Body Electrical Simulator - Fault Switch #7* worksheet. Check each category after viewing the instructor's presentation and completing the worksheet. Ask the instructor if you have questions regarding the topics provided below. Additional space is provided under topic for you to list any other concerns that you would like your instructor to address. The comments section is provided for your personal comments, information, questions, etc.

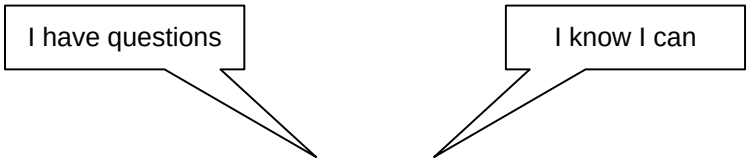

Topic			Comment

Notes

WORKSHEET 5-9
ES 300 Body Electrical Simulator - Fault Switch #8

Vehicle	Year/Prod. Date	Engine	Transmission

Problem Description: **TAILLIGHTS INOP**

❑ **Problem Found** (check one): ❑ **Intermittent** ❑ **Continuous**

❑ **No Problem Found**—Operation is normal.

Explanation: _____

Step 2: Determine the Related Symptoms

1. Using the EWD, read the System Outline to see how the circuit is supposed to operate (if available).

2. Determine if it affects **ALL** or **PART** of the circuit.

   - **If all of the circuit is affected** check the operation of circuits which have common fuse/power sources and also circuits which use common grounding points.
   - **If only part(s) of the circuit** is affected, determine exactly which parts are OK and which are inoperative.

Circuit	OK or Bad	Observations

Step 3: Analyze the Symptoms

1. Based upon the original complaint, and your related symptoms checks, specifically identify the problem:

   _____

2. *On the following System Circuit Diagram:* Based upon your related symptom checks, use a highlighter to **trace current flow in the parts of the circuit that are OK.**

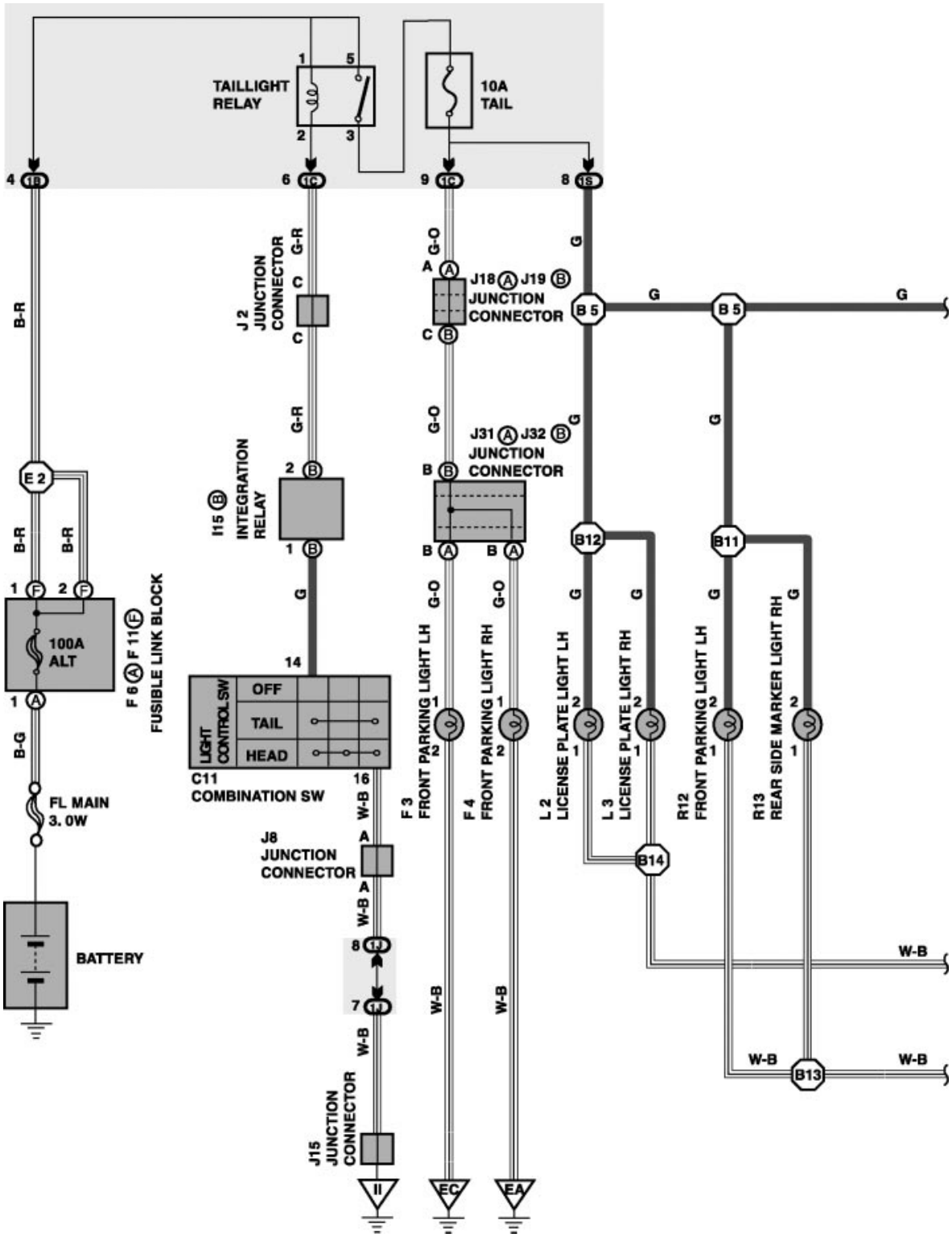
TAILLIGHT RELAY
10A TAIL
J 2 JUNCTION CONNECTOR
J18 J19 JUNCTION CONNECTOR
J31 J32 JUNCTION CONNECTOR
I15 INTEGRATION RELAY
100A ALT
F 6 F 11 FUSIBLE LINK BLOCK
FL MAIN 3. 0W
BATTERY
LIGHT CONTROL SW
OFF
TAIL
HEAD
C11 COMBINATION SW
J8 JUNCTION CONNECTOR
J15 JUNCTION CONNECTOR
F 3 FRONT PARKING LIGHT LH
F 4 FRONT PARKING LIGHT RH
L 2 LICENSE PLATE LIGHT LH
L 3 LICENSE PLATE LIGHT RH
R12 FRONT PARKING LIGHT LH
R13 REAR SIDE MARKER LIGHT RH
B-R
B-G
G-R
G-O
G
W-B

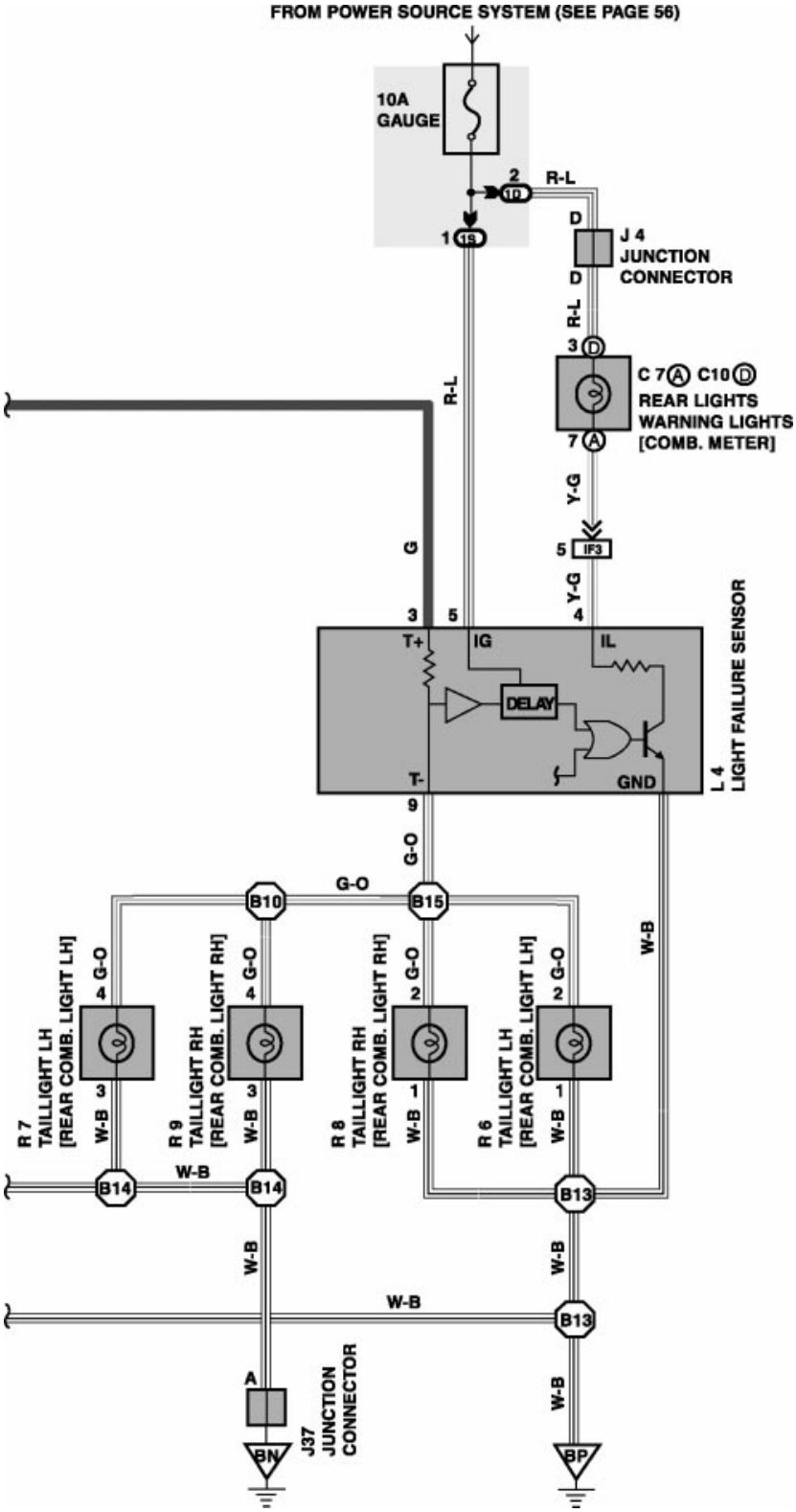
FROM POWER SOURCE SYSTEM (SEE PAGE 56)
10A
GAUGE
2
10
R-L
1
15
D
J 4
JUNCTION
CONNECTOR
D
R-L
3
D
C 7 A C10 D
REAR LIGHTS
WARNING LIGHTS
[COMB. METER]
7
A
R-L
Y-G
5
IF3
G
Y-G
4
3
5
T+
IG
IL
DELAY
T-
GND
L 4
LIGHT FAILURE SENSOR
9
G-O
G-O
B10
B15
W-B
R 7
TAILLIGHT LH
[REAR COMB. LIGHT LH]
4
G-O
3
W-B
R 9
TAILLIGHT RH
[REAR COMB. LIGHT RH]
4
G-O
3
W-B
R 8
TAILLIGHT RH
[REAR COMB. LIGHT RH]
2
G-O
1
W-B
R 6
TAILLIGHT LH
[REAR COMB. LIGHT LH]
2
G-O
1
W-B
W-B
B14
B14
B13
W-B
W-B
W-B
B13
A
J37
JUNCTION
CONNECTOR
W-B
BN
BP

Step 4: Isolate the Trouble

1. On the System Circuit Diagram, **circle the possible problem areas.**

2. List the first 2 items you will inspect. Mark the **type of inspection** (visual, voltmeter, ohmmeter, ammeter or jumper wire) and write in the **inspection item** (component, connector with pin numbers, wire color, etc.)

3. List the **specifications**, the **measured result** and **your diagnosis** in the appropriate column.

4. If the initial checks lead you to make **additional inspections**, list them in the shaded area.

Inspection Type	Inspection Item	Specification	Measured Result	OK or Bad
❑ Visual ❑ Voltmeter ❑ Ohmmeter ❑ Ammeter ❑ Jumper Wire				
❑ Visual ❑ Voltmeter ❑ Ohmmeter ❑ Ammeter ❑ Jumper Wire				
❑ Visual ❑ Voltmeter ❑ Ohmmeter ❑ Ammeter ❑ Jumper Wire				
❑ Visual ❑ Voltmeter ❑ Ohmmeter ❑ Ammeter ❑ Jumper Wire				
❑ Visual ❑ Voltmeter ❑ Ohmmeter ❑ Ammeter ❑ Jumper Wire				
❑ Visual ❑ Voltmeter ❑ Ohmmeter ❑ Ammeter ❑ Jumper Wire				
❑ Visual ❑ Voltmeter ❑ Ohmmeter ❑ Ammeter ❑ Jumper Wire				
❑ Visual ❑ Voltmeter ❑ Ohmmeter ❑ Ammeter ❑ Jumper Wire				

Step 5: Correct the Trouble

Cause of problem and location:	**Instructor OK**

Step 6: Check for Proper Operation

❑ Re-test the system/circuit to verify the repair

ES 300 Body Electrical Simulator - Fault Switch #8

Name: _____ Date: _____

Review this sheet as you are doing the *ES 300 Body Electrical Simulator - Fault Switch #8* worksheet. Check each category after viewing the instructor's presentation and completing the worksheet. Ask the instructor if you have questions regarding the topics provided below. Additional space is provided under topic for you to list any other concerns that you would like your instructor to address. The comments section is provided for your personal comments, information, questions, etc.

I have questions

I know I can

Topic			Comment

Notes

WORKSHEET 5-10
ES 300 Body Electrical Simulator - Fault Switch #10

Vehicle	Year/Prod. Date	Engine	Transmission

Problem Description: **BLOWER MOTOR INOP**

❑ **Problem Found** (check one): ❑ **Intermittent** ❑ **Continuous**

❑ **No Problem Found**—Operation is normal.

Explanation: _____

Step 2: Determine the Related Symptoms

1. Using the EWD, read the System Outline to see how the circuit is supposed to operate (if available).

2. Determine if it affects **ALL** or **PART** of the circuit.

   - **If all of the circuit is affected** check the operation of circuits which have common fuse/power sources and also circuits which use common grounding points.
   - **If only part(s) of the circuit** is affected, determine exactly which parts are OK and which are inoperative.

Circuit	OK or Bad	Observations

Step 3: Analyze the Symptoms

1. Based upon the original complaint, and your related symptoms checks, specifically identify the problem:

   _____

2. *On the following System Circuit Diagram:* Based upon your related symptom checks, use a highlighter to **trace current flow in the parts of the circuit that are OK.**

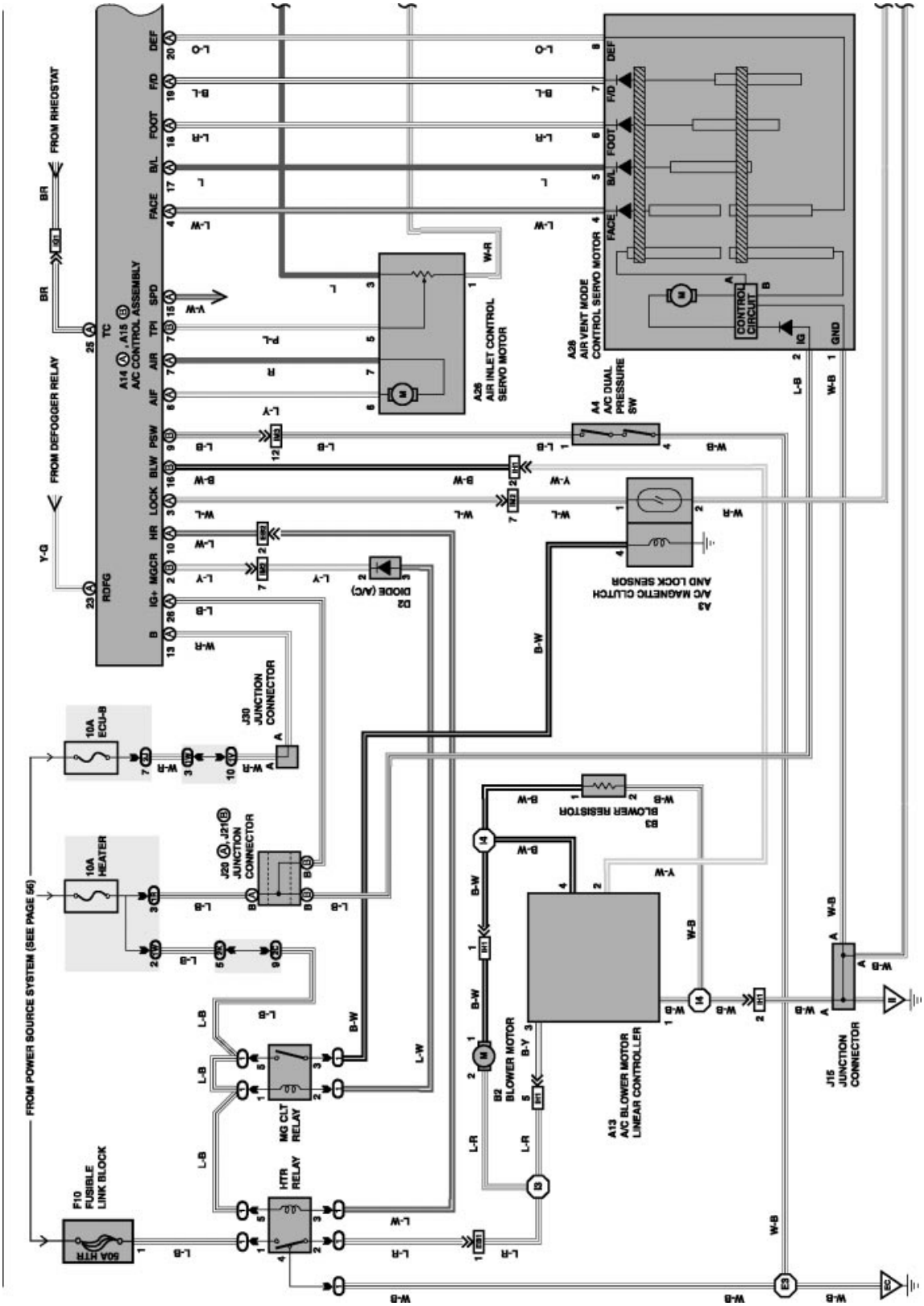
FROM RHEOSTAT
FROM DEFOGGER RELAY
FROM POWER SOURCE SYSTEM (SEE PAGE 56)
A14 , A15
A/C CONTROL ASSEMBLY
TC
ROFG
DEF
F/D
FOOT
B/L
FACE
SPD
TPI
AIR
AIF
PSW
BLW
LOCK
HR
MGCR
IG+
B
A26
AIR VENT MODE
CONTROL SERVO MOTOR
CONTROL
CIRCUIT
IG
GND
A25
AIR INLET CONTROL
SERVO MOTOR
A4
A/C DUAL
PRESSURE
SW
A3
A/C MAGNETIC CLUTCH
AND LOCK SENSOR
D2
DIODE (A/C)
J30
JUNCTION
CONNECTOR
10A
ECU-B
10A
HEATER
J20 , J21
JUNCTION
CONNECTOR
B3
BLOWER RESISTOR
B2
BLOWER MOTOR
A13
A/C BLOWER MOTOR
LINEAR CONTROLLER
J15
JUNCTION
CONNECTOR
MG CLT
RELAY
HTR
RELAY
F10
FUSIBLE
LINK BLOCK
50A HTR

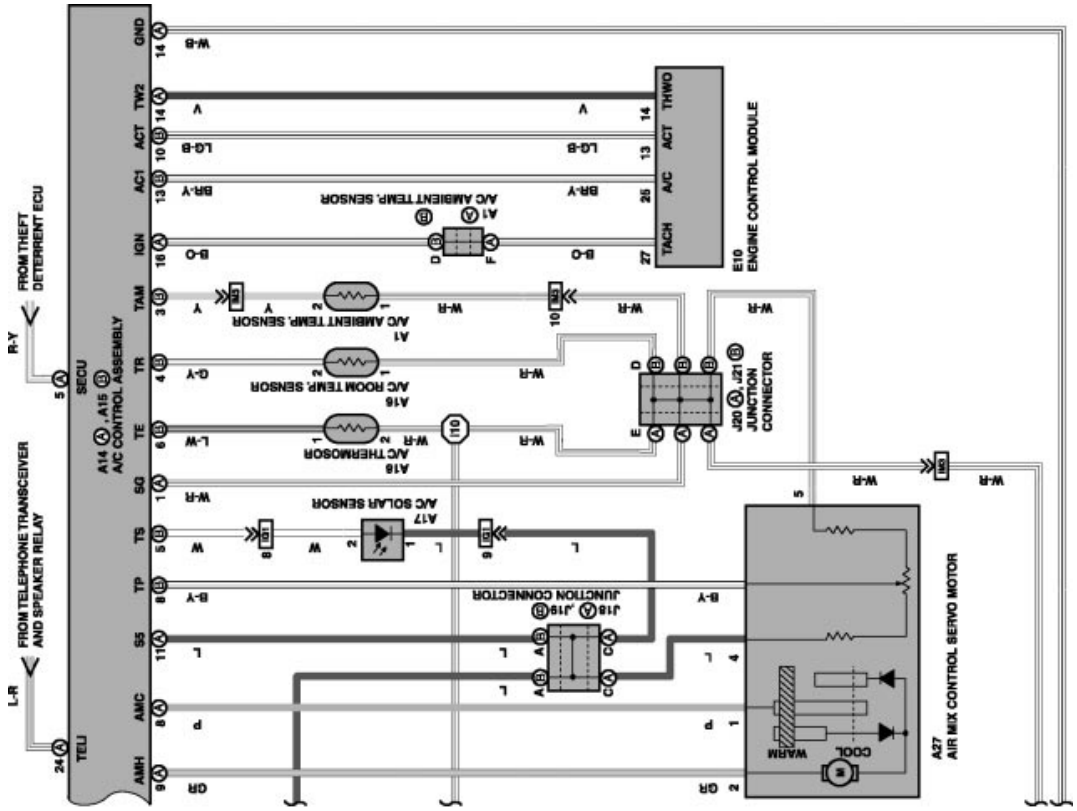
FROM THEFT DETERRENT ECU
R-Y
FROM TELEPHONE TRANSCEIVER AND SPEAKER RELAY
L-R
SECU
A14 A, A15 B
A/C CONTROL ASSEMBLY
TELU
GND
TW2
ACT
AC1
IGN
TAM
TR
SQ
TE
TS
TP
SS
AMC
AMH
A/C AMBIENT TEMP. SENSOR
A/C ROOM TEMP. SENSOR
A/C THERMOSOR
A/C SOLAR SENSOR
J18 A, J19 B
JUNCTION CONNECTOR
E10
ENGINE CONTROL MODULE
THWO
TACH
J20 A, J21 B
JUNCTION CONNECTOR
A27
AIR MIX CONTROL SERVO MOTOR
WARM
COOL

Step 4: Isolate the Trouble

1. On the System Circuit Diagram, **circle the possible problem areas.**

2. List the first 2 items you will inspect. Mark the **type of inspection** (visual, voltmeter, ohmmeter, ammeter or jumper wire) and write in the **inspection item** (component, connector with pin numbers, wire color, etc.)

3. List the **specifications**, the **measured result** and **your diagnosis** in the appropriate column.

4. If the initial checks lead you to make **additional inspections**, list them in the shaded area.

Inspection Type	Inspection Item	Specification	Measured Result	OK or Bad
❑ Visual ❑ Voltmeter ❑ Ohmmeter ❑ Ammeter ❑ Jumper Wire				
❑ Visual ❑ Voltmeter ❑ Ohmmeter ❑ Ammeter ❑ Jumper Wire				
❑ Visual ❑ Voltmeter ❑ Ohmmeter ❑ Ammeter ❑ Jumper Wire				
❑ Visual ❑ Voltmeter ❑ Ohmmeter ❑ Ammeter ❑ Jumper Wire				
❑ Visual ❑ Voltmeter ❑ Ohmmeter ❑ Ammeter ❑ Jumper Wire				
❑ Visual ❑ Voltmeter ❑ Ohmmeter ❑ Ammeter ❑ Jumper Wire				
❑ Visual ❑ Voltmeter ❑ Ohmmeter ❑ Ammeter ❑ Jumper Wire				
❑ Visual ❑ Voltmeter ❑ Ohmmeter ❑ Ammeter ❑ Jumper Wire				

Step 5: Correct the Trouble

Cause of problem and location:	**Instructor OK**

Step 6: Check for Proper Operation

❑ Re-test the system/circuit to verify the repair

ES 300 Body Electrical Simulator - Fault Switch #10

Name: _____ Date: _____

Review this sheet as you are doing the *ES 300 Body Electrical Simulator - Fault Switch #10* worksheet. Check each category after viewing the instructor's presentation and completing the worksheet. Ask the instructor if you have questions regarding the topics provided below. Additional space is provided under topic for you to list any other concerns that you would like your instructor to address. The comments section is provided for your personal comments, information, questions, etc.

I have questions

I know I can

Topic			Comment

Notes

WORKSHEET 5-11
ES 300 Body Electrical Simulator - Fault Switch #11

Vehicle	Year/Prod. Date	Engine	Transmission

Problem Description: **LEFT REAR SIGNAL INOP**

❑ **Problem Found** (check one): ❑ **Intermittent** ❑ **Continuous**

❑ **No Problem Found**—Operation is normal.

Explanation: _____

Step 2: Determine the Related Symptoms

1. Using the EWD, read the System Outline to see how the circuit is supposed to operate (if available).

2. Determine if it affects **ALL** or **PART** of the circuit.

   - **If all of the circuit is affected** check the operation of circuits which have common fuse/power sources and also circuits which use common grounding points.
   - **If only part(s) of the circuit** is affected, determine exactly which parts are OK and which are inoperative.

Circuit	OK or Bad	Observations

Step 3: Analyze the Symptoms

1. Based upon the original complaint, and your related symptoms checks, specifically identify the problem:

   _____

2. *On the following System Circuit Diagram:* Based upon your related symptom checks, use a highlighter to **trace current flow in the parts of the circuit that are OK.**

TURN SIGNAL AND HAZARD WARNING LIGHT

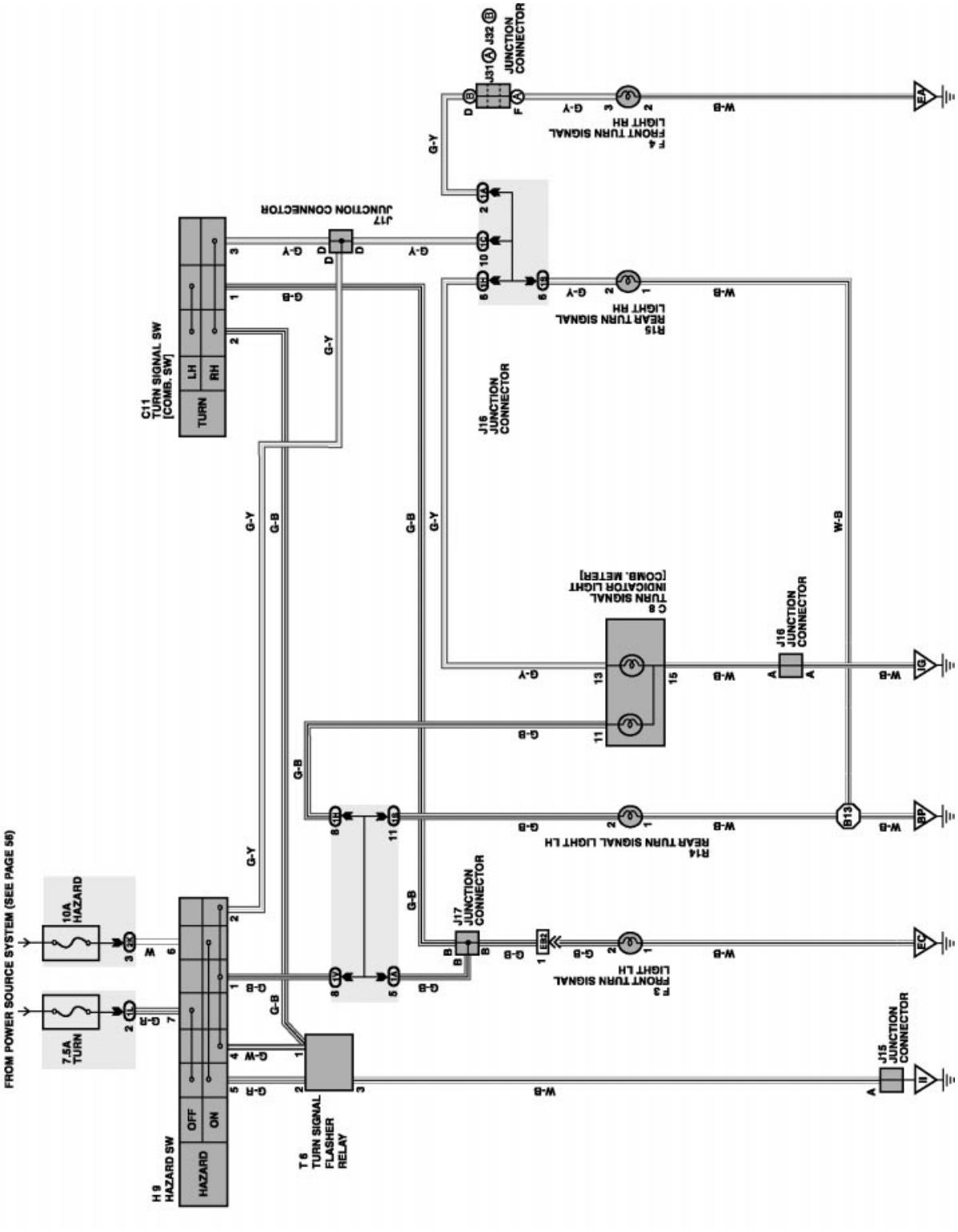

Step 4: Isolate the Trouble

1. On the System Circuit Diagram, **circle the possible problem areas.**

2. List the first 2 items you will inspect. Mark the **type of inspection** (visual, voltmeter, ohmmeter, ammeter or jumper wire) and write in the **inspection item** (component, connector with pin numbers, wire color, etc.)

3. List the **specifications**, the **measured result** and **your diagnosis** in the appropriate column.

4. If the initial checks lead you to make **additional inspections**, list them in the shaded area.

Inspection Type	Inspection Item	Specification	Measured Result	OK or Bad
❑ Visual ❑ Voltmeter ❑ Ohmmeter ❑ Ammeter ❑ Jumper Wire				
❑ Visual ❑ Voltmeter ❑ Ohmmeter ❑ Ammeter ❑ Jumper Wire				
❑ Visual ❑ Voltmeter ❑ Ohmmeter ❑ Ammeter ❑ Jumper Wire				
❑ Visual ❑ Voltmeter ❑ Ohmmeter ❑ Ammeter ❑ Jumper Wire				
❑ Visual ❑ Voltmeter ❑ Ohmmeter ❑ Ammeter ❑ Jumper Wire				
❑ Visual ❑ Voltmeter ❑ Ohmmeter ❑ Ammeter ❑ Jumper Wire				
❑ Visual ❑ Voltmeter ❑ Ohmmeter ❑ Ammeter ❑ Jumper Wire				
❑ Visual ❑ Voltmeter ❑ Ohmmeter ❑ Ammeter ❑ Jumper Wire				

Step 5: Correct the Trouble

Cause of problem and location:	**Instructor OK**

Step 6: Check for Proper Operation

❑ Re-test the system/circuit to verify the repair

Notes

ES 300 Body Electrical Simulator - Fault Switch #11

Name: _____ Date: _____

Review this sheet as you are doing the *ES 300 Body Electrical Simulator - Fault Switch #11* worksheet. Check each category after viewing the instructor's presentation and completing the worksheet. Ask the instructor if you have questions regarding the topics provided below. Additional space is provided under topic for you to list any other concerns that you would like your instructor to address. The comments section is provided for your personal comments, information, questions, etc..

I have questions

I know I can

Topic			Comment

Notes

WORKSHEET 5-12
ES 300 Body Electrical Simulator - Fault Switch #12

Vehicle	Year/Prod. Date	Engine	Transmission

Problem Description: **RIGHT MIRROR WON'T GO UP OR DOWN**

❑ **Problem Found** (check one): ❑ **Intermittent** ❑ **Continuous**

❑ **No Problem Found**—Operation is normal.

Explanation: _____

Step 2: Determine the Related Symptoms

1. Using the EWD, read the System Outline to see how the circuit is supposed to operate (if available).

2. Determine if it affects **ALL** or **PART** of the circuit.

   - **If all of the circuit is affected** check the operation of circuits which have common fuse/power sources and also circuits which use common grounding points.
   - **If only part(s) of the circuit** is affected, determine exactly which parts are OK and which are inoperative.

Circuit	OK or Bad	Observations

Step 3: Analyze the Symptoms

1. Based upon the original complaint, and your related symptoms checks, specifically identify the problem:

   _____

2. *On the following System Circuit Diagram:* Based upon your related symptom checks, use a highlighter to **trace current flow in the parts of the circuit that are OK.**

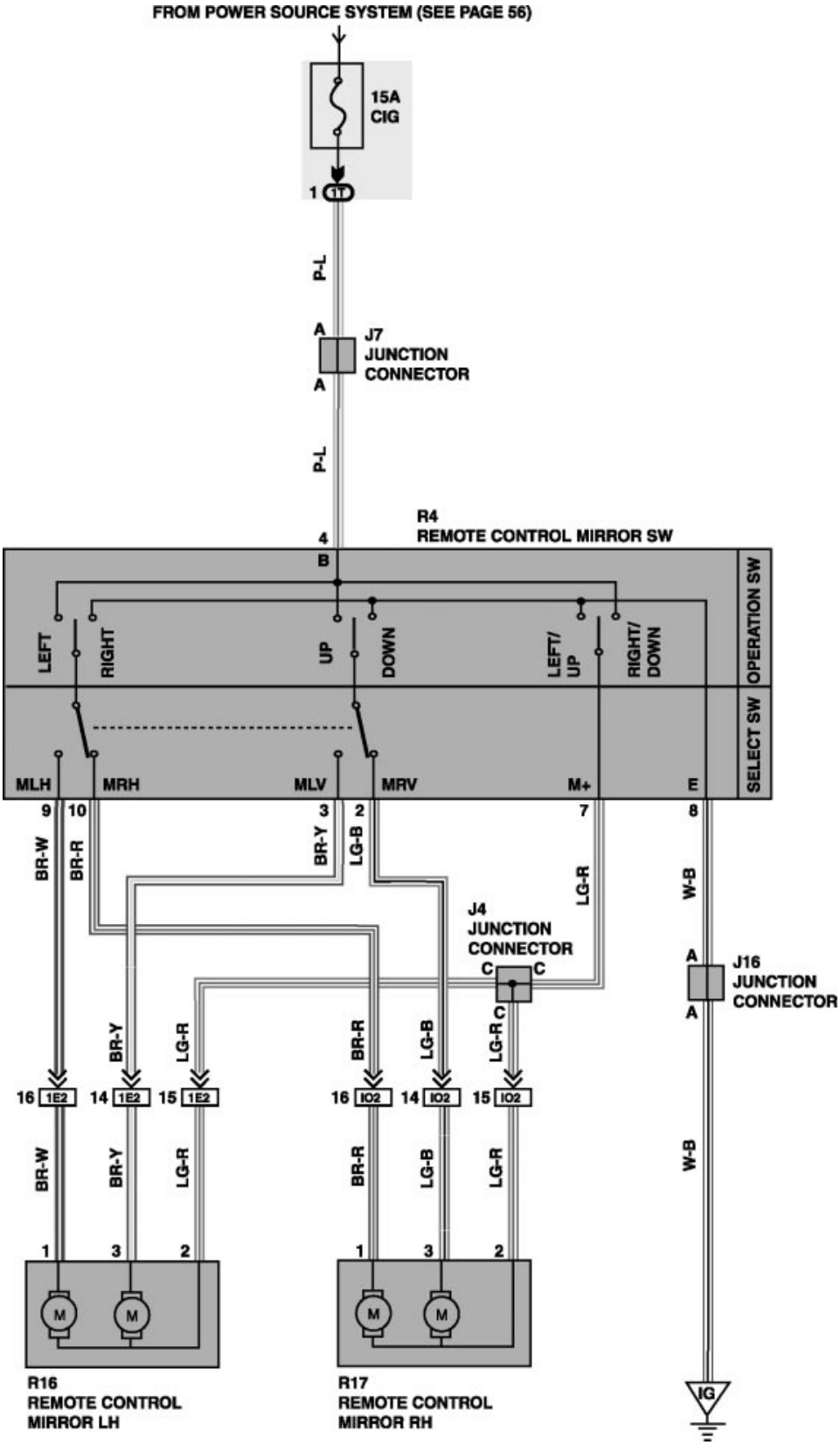
FROM POWER SOURCE SYSTEM (SEE PAGE 56)
15A
CIG
1
11
P-L
A
J7
JUNCTION
CONNECTOR
A
P-L
4
B
R4
REMOTE CONTROL MIRROR SW
OPERATION SW
LEFT
RIGHT
UP
DOWN
LEFT/
UP
RIGHT/
DOWN
SELECT SW
MLH
MRH
MLV
MRV
M+
E
9
10
3
2
7
8
BR-W
BR-R
BR-Y
LG-B
LG-R
W-B
J4
JUNCTION
CONNECTOR
C
C
C
A
J16
JUNCTION
CONNECTOR
A
BR-Y
LG-R
BR-R
LG-B
LG-R
16
1E2
14
1E2
15
1E2
16
IO2
14
IO2
15
IO2
BR-W
BR-Y
LG-R
BR-R
LG-B
LG-R
W-B
1
3
2
1
3
2
M
M
M
M
R16
REMOTE CONTROL
MIRROR LH
R17
REMOTE CONTROL
MIRROR RH
IG

Step 4: Isolate the Trouble

1. On the System Circuit Diagram, **circle the possible problem areas.**

2. List the first 2 items you will inspect. Mark the **type of inspection** (visual, voltmeter, ohmmeter, ammeter or jumper wire) and write in the **inspection item** (component, connector with pin numbers, wire color, etc.)

3. List the **specifications**, the **measured result** and **your diagnosis** in the appropriate column.

4. If the initial checks lead you to make **additional inspections**, list them in the shaded area.

Inspection Type	Inspection Item	Specification	Measured Result	OK or Bad
❑ Visual ❑ Voltmeter ❑ Ohmmeter ❑ Ammeter ❑ Jumper Wire				
❑ Visual ❑ Voltmeter ❑ Ohmmeter ❑ Ammeter ❑ Jumper Wire				
❑ Visual ❑ Voltmeter ❑ Ohmmeter ❑ Ammeter ❑ Jumper Wire				
❑ Visual ❑ Voltmeter ❑ Ohmmeter ❑ Ammeter ❑ Jumper Wire				
❑ Visual ❑ Voltmeter ❑ Ohmmeter ❑ Ammeter ❑ Jumper Wire				
❑ Visual ❑ Voltmeter ❑ Ohmmeter ❑ Ammeter ❑ Jumper Wire				
❑ Visual ❑ Voltmeter ❑ Ohmmeter ❑ Ammeter ❑ Jumper Wire				
❑ Visual ❑ Voltmeter ❑ Ohmmeter ❑ Ammeter ❑ Jumper Wire				

Step 5: Correct the Trouble

Cause of problem and location:	**Instructor OK**

Step 6: Check for Proper Operation

❑ Re-test the system/circuit to verify the repair

Notes

ES 300 Body Electrical Simulator - Fault Switch #12

Name: _____ Date: _____

Review this sheet as you are doing the *ES 300 Body Electrical Simulator - Fault Switch #12* worksheet. Check each category after viewing the instructor's presentation and completing the worksheet. Ask the instructor if you have questions regarding the topics provided below. Additional space is provided under topic for you to list any other concerns that you would like your instructor to address. The comments section is provided for your personal comments, information, questions, etc.

I have questions

I know I can

Topic			Comment

Notes

WORKSHEET 5-13
ES 300 Body Electrical Simulator - Fault Switch #13

Vehicle	Year/Prod. Date	Engine	Transmission

Problem Description: **INSTRUMENT PANEL LIGHTS DO NOT DIM**

❑ **Problem Found** (check one): ❑ **Intermittent** ❑ **Continuous**

❑ **No Problem Found**—Operation is normal.

Explanation: _____

Step 2: Determine the Related Symptoms

1. Using the EWD, read the System Outline to see how the circuit is supposed to operate (if available).

2. Determine if it affects **ALL** or **PART** of the circuit.

   - **If all of the circuit is affected** check the operation of circuits which have common fuse/power sources and also circuits which use common grounding points.
   - **If only part(s) of the circuit** is affected, determine exactly which parts are OK and which are inoperative.

Circuit	OK or Bad	Observations

Step 3: Analyze the Symptoms

1. Based upon the original complaint, and your related symptoms checks, specifically identify the problem:

   _____

2. *On the following System Circuit Diagram:* Based upon your related symptom checks, use a highlighter to **trace current flow in the parts of the circuit that are OK.**

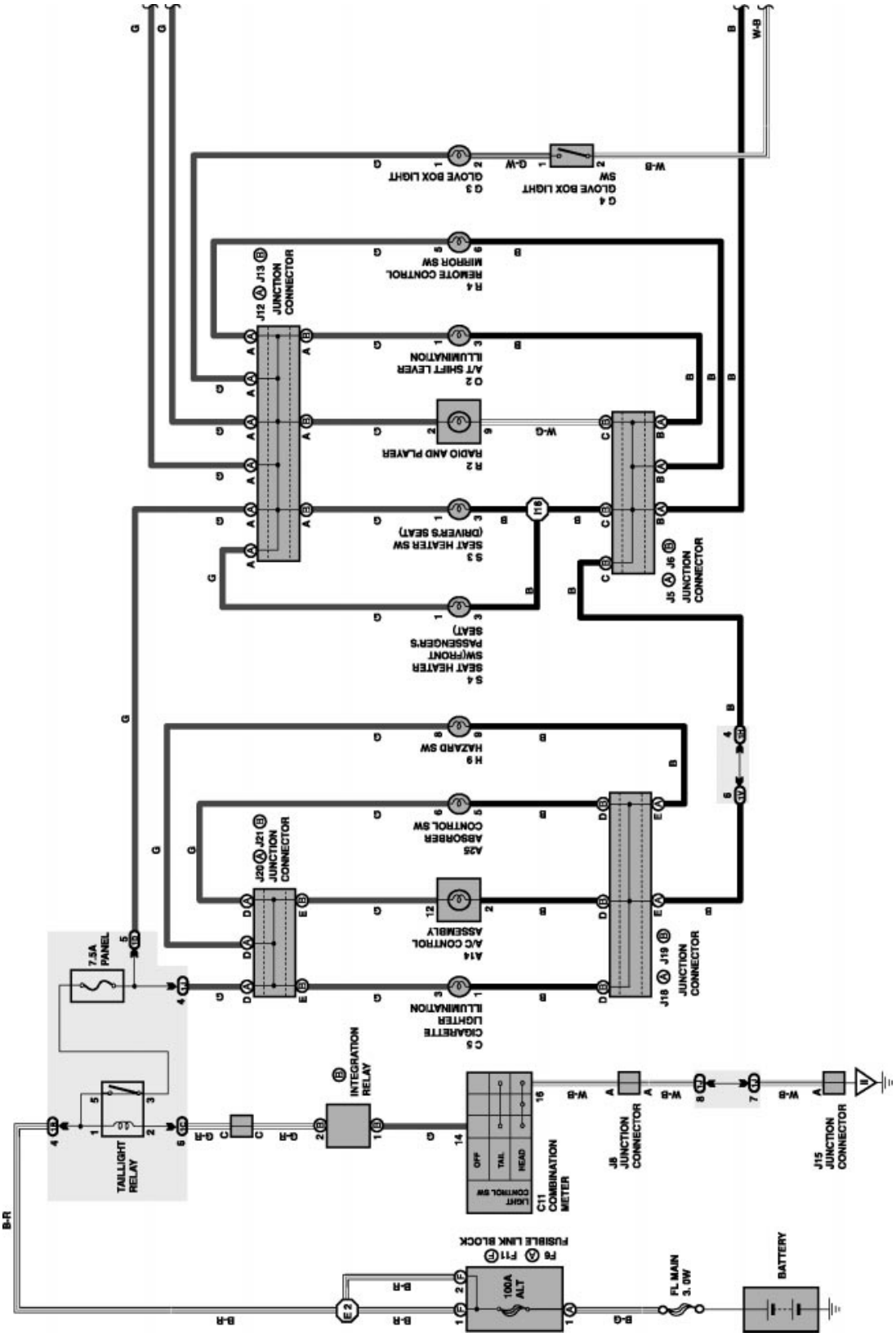
G 4
GLOVE BOX LIGHT SW
G 3
GLOVE BOX LIGHT
R 4
REMOTE CONTROL MIRROR SW
O 2
A/T SHIFT LEVER ILLUMINATION
R 2
RADIO AND PLAYER
S 3
SEAT HEATER SW (DRIVER'S SEAT)
S 4
SEAT HEATER SW(FRONT PASSENGER'S SEAT)
H 9
HAZARD SW
A25
ABSORBER CONTROL SW
A14
A/C CONTROL ASSEMBLY
C 5
CIGARETTE LIGHTER ILLUMINATION
J12 J13 JUNCTION CONNECTOR
J5 J6 JUNCTION CONNECTOR
J20 J21 JUNCTION CONNECTOR
J18 J19 JUNCTION CONNECTOR
7.5A PANEL
TAILLIGHT RELAY
INTEGRATION RELAY
C11 COMBINATION METER
LIGHT CONTROL SW
OFF
TAIL
HEAD
J8 JUNCTION CONNECTOR
J15 JUNCTION CONNECTOR
FUSIBLE LINK BLOCK
F6 F11
100A ALT
FL MAIN 3.0W
BATTERY
E2
B-R
G-R
B-G
W-B
W-G
G-W

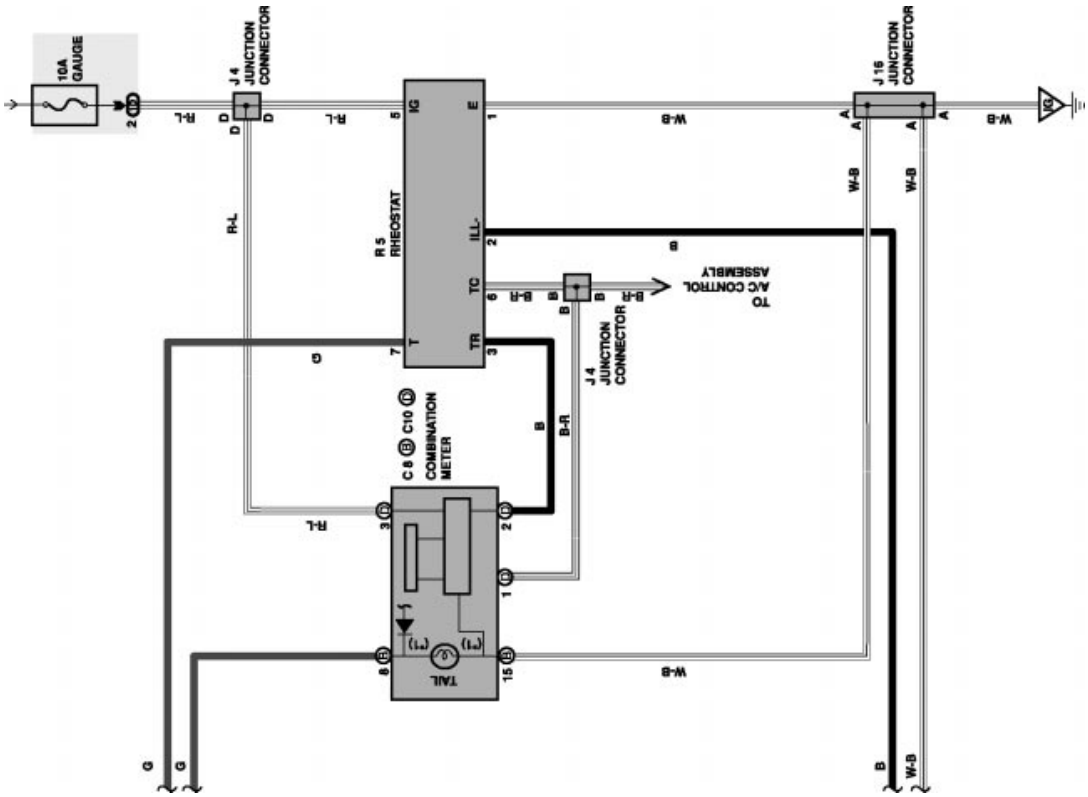
10A
GAUGE
J 4
JUNCTION
CONNECTOR
R 5
RHEOSTAT
IG
ILL
TC
TR
T
E
J 4
JUNCTION
CONNECTOR
TO
A/C CONTROL
ASSEMBLY
C 8
C10
COMBINATION
METER
TAIL
J 16
JUNCTION
CONNECTOR
IG
R-L
W-B
B-R
B
G

Step 4: Isolate the Trouble

1. On the System Circuit Diagram, **circle the possible problem areas.**

2. List the first 2 items you will inspect. Mark the **type of inspection** (visual, voltmeter, ohmmeter, ammeter or jumper wire) and write in the **inspection item** (component, connector with pin numbers, wire color, etc.)

3. List the **specifications**, the **measured result** and **your diagnosis** in the appropriate column.

4. If the initial checks lead you to make **additional inspections**, list them in the shaded area.

Inspection Type	Inspection Item	Specification	Measured Result	OK or Bad
❑ Visual ❑ Voltmeter ❑ Ohmmeter ❑ Ammeter ❑ Jumper Wire				
❑ Visual ❑ Voltmeter ❑ Ohmmeter ❑ Ammeter ❑ Jumper Wire				
❑ Visual ❑ Voltmeter ❑ Ohmmeter ❑ Ammeter ❑ Jumper Wire				
❑ Visual ❑ Voltmeter ❑ Ohmmeter ❑ Ammeter ❑ Jumper Wire				
❑ Visual ❑ Voltmeter ❑ Ohmmeter ❑ Ammeter ❑ Jumper Wire				
❑ Visual ❑ Voltmeter ❑ Ohmmeter ❑ Ammeter ❑ Jumper Wire				
❑ Visual ❑ Voltmeter ❑ Ohmmeter ❑ Ammeter ❑ Jumper Wire				
❑ Visual ❑ Voltmeter ❑ Ohmmeter ❑ Ammeter ❑ Jumper Wire				

Step 5: Correct the Trouble

Cause of problem and location:	**Instructor OK**

Step 6: Check for Proper Operation

❑ Re-test the system/circuit to verify the repair

ES 300 Body Electrical Simulator - Fault Switch #13

Name: _____ Date: _____

Review this sheet as you are doing the *ES 300 Body Electrical Simulator - Fault Switch #13* worksheet. Check each category after viewing the instructor's presentation and completing the worksheet. Ask the instructor if you have questions regarding the topics provided below. Additional space is provided under topic for you to list any other concerns that you would like your instructor to address. The comments section is provided for your personal comments, information, questions, etc.

I have questions

I know I can

Topic			Comment

Notes

WORKSHEET 5-14
ES 300 Body Electrical Simulator - Fault Switch #14

Vehicle	Year/Prod. Date	Engine	Transmission

Problem Description: **DRIVER POWER WINDOW INOP**

❑ **Problem Found** (check one): ❑ **Intermittent** ❑ **Continuous**

❑ **No Problem Found**—Operation is normal.

Explanation: _____

Step 2: Determine the Related Symptoms

1. Using the EWD, read the System Outline to see how the circuit is supposed to operate (if available).

2. Determine if it affects **ALL** or **PART** of the circuit.

   - **If all of the circuit is affected** check the operation of circuits which have common fuse/power sources and also circuits which use common grounding points.
   - **If only part(s) of the circuit** is affected, determine exactly which parts are OK and which are inoperative.

Circuit	OK or Bad	Observations

Step 3: Analyze the Symptoms

1. Based upon the original complaint, and your related symptoms checks, specifically identify the problem:

   _____

2. *On the following System Circuit Diagram:* Based upon your related symptom checks, use a highlighter to **trace current flow in the parts of the circuit that are OK.**

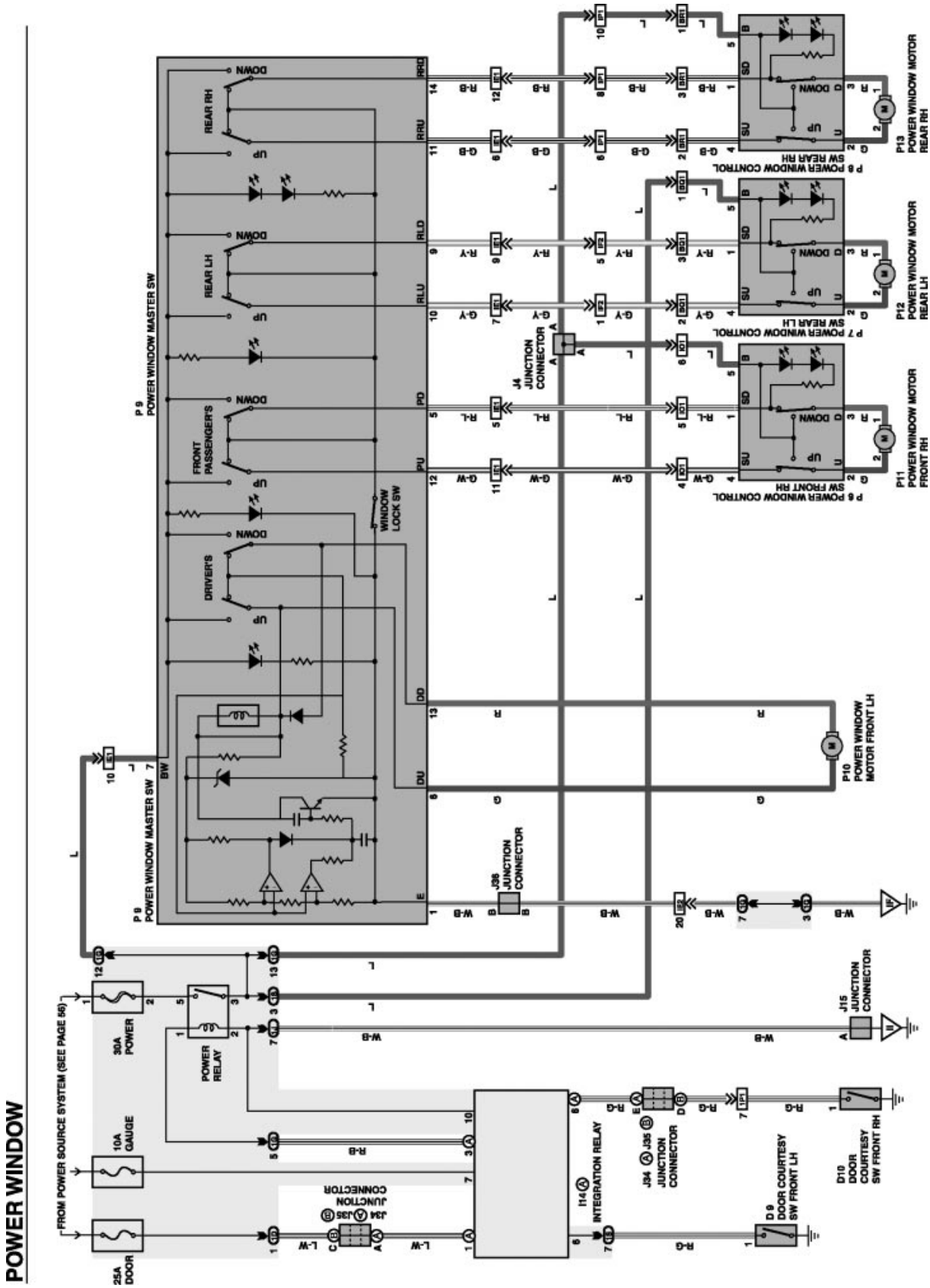
POWER WINDOW
FROM POWER SOURCE SYSTEM (SEE PAGE 56)
25A DOOR
10A GAUGE
30A POWER
POWER RELAY
P 9 POWER WINDOW MASTER SW
REAR RH
REAR LH
FRONT PASSENGER'S
DRIVER'S
UP
DOWN
WINDOW LOCK SW
J4 JUNCTION CONNECTOR
J36 JUNCTION CONNECTOR
J34 J35 JUNCTION CONNECTOR
I14 INTEGRATION RELAY
J34 JUNCTION CONNECTOR
J35 JUNCTION CONNECTOR
D 9 DOOR COURTESY SW FRONT LH
D10 DOOR COURTESY SW FRONT RH
J15 JUNCTION CONNECTOR
P10 POWER WINDOW MOTOR FRONT LH
P 6 POWER WINDOW CONTROL SW FRONT RH
P 7 POWER WINDOW CONTROL SW REAR LH
P 8 POWER WINDOW CONTROL SW REAR RH
P11 POWER WINDOW MOTOR FRONT RH
P12 POWER WINDOW MOTOR REAR LH
P13 POWER WINDOW MOTOR REAR RH

Step 4: Isolate the Trouble

1. On the System Circuit Diagram, **circle the possible problem areas.**

2. List the first 2 items you will inspect. Mark the **type of inspection** (visual, voltmeter, ohmmeter, ammeter or jumper wire) and write in the **inspection item** (component, connector with pin numbers, wire color, etc.)

3. List the **specifications**, the **measured result** and **your diagnosis** in the appropriate column.

4. If the initial checks lead you to make **additional inspections**, list them in the shaded area.

Inspection Type	Inspection Item	Specification	Measured Result	OK or Bad
❑ Visual ❑ Voltmeter ❑ Ohmmeter ❑ Ammeter ❑ Jumper Wire				
❑ Visual ❑ Voltmeter ❑ Ohmmeter ❑ Ammeter ❑ Jumper Wire				
❑ Visual ❑ Voltmeter ❑ Ohmmeter ❑ Ammeter ❑ Jumper Wire				
❑ Visual ❑ Voltmeter ❑ Ohmmeter ❑ Ammeter ❑ Jumper Wire				
❑ Visual ❑ Voltmeter ❑ Ohmmeter ❑ Ammeter ❑ Jumper Wire				
❑ Visual ❑ Voltmeter ❑ Ohmmeter ❑ Ammeter ❑ Jumper Wire				
❑ Visual ❑ Voltmeter ❑ Ohmmeter ❑ Ammeter ❑ Jumper Wire				
❑ Visual ❑ Voltmeter ❑ Ohmmeter ❑ Ammeter ❑ Jumper Wire				

Step 5: Correct the Trouble

Cause of problem and location:	**Instructor OK**

Step 6: Check for Proper Operation

❑ Re-test the system/circuit to verify the repair

Notes

ES 300 Body Electrical Simulator - Fault Switch #14

Name: _____ Date: _____

Review this sheet as you are doing the *ES 300 Body Electrical Simulator - Fault Switch #14* worksheet. Check each category after viewing the instructor's presentation and completing the worksheet. Ask the instructor if you have questions regarding the topics provided below. Additional space is provided under topic for you to list any other concerns that you would like your instructor to address. The comments section is provided for your personal comments, information, questions, etc.

I have questions

I know I can

Topic			Comment

Notes

WORKSHEET 5-15
ES 300 Body Electrical Simulator - Fault Switch #15

Vehicle	Year/Prod. Date	Engine	Transmission

Problem Description: **COMBINATION METER DOES NOT ILLUMINATE**

❑ **Problem Found** (check one): ❑ **Intermittent** ❑ **Continuous**

❑ **No Problem Found**—Operation is normal.

Explanation: _____

Step 2: Determine the Related Symptoms

1. Using the EWD, read the System Outline to see how the circuit is supposed to operate (if available).

2. Determine if it affects **ALL** or **PART** of the circuit.

   - **If all of the circuit is affected** check the operation of circuits which have common fuse/power sources and also circuits which use common grounding points.
   - **If only part(s) of the circuit** is affected, determine exactly which parts are OK and which are inoperative.

Circuit	OK or Bad	Observations

Step 3: Analyze the Symptoms

1. Based upon the original complaint, and your related symptoms checks, specifically identify the problem:

   _____

2. *On the following System Circuit Diagram:* Based upon your related symptom checks, use a highlighter to **trace current flow in the parts of the circuit that are OK.**

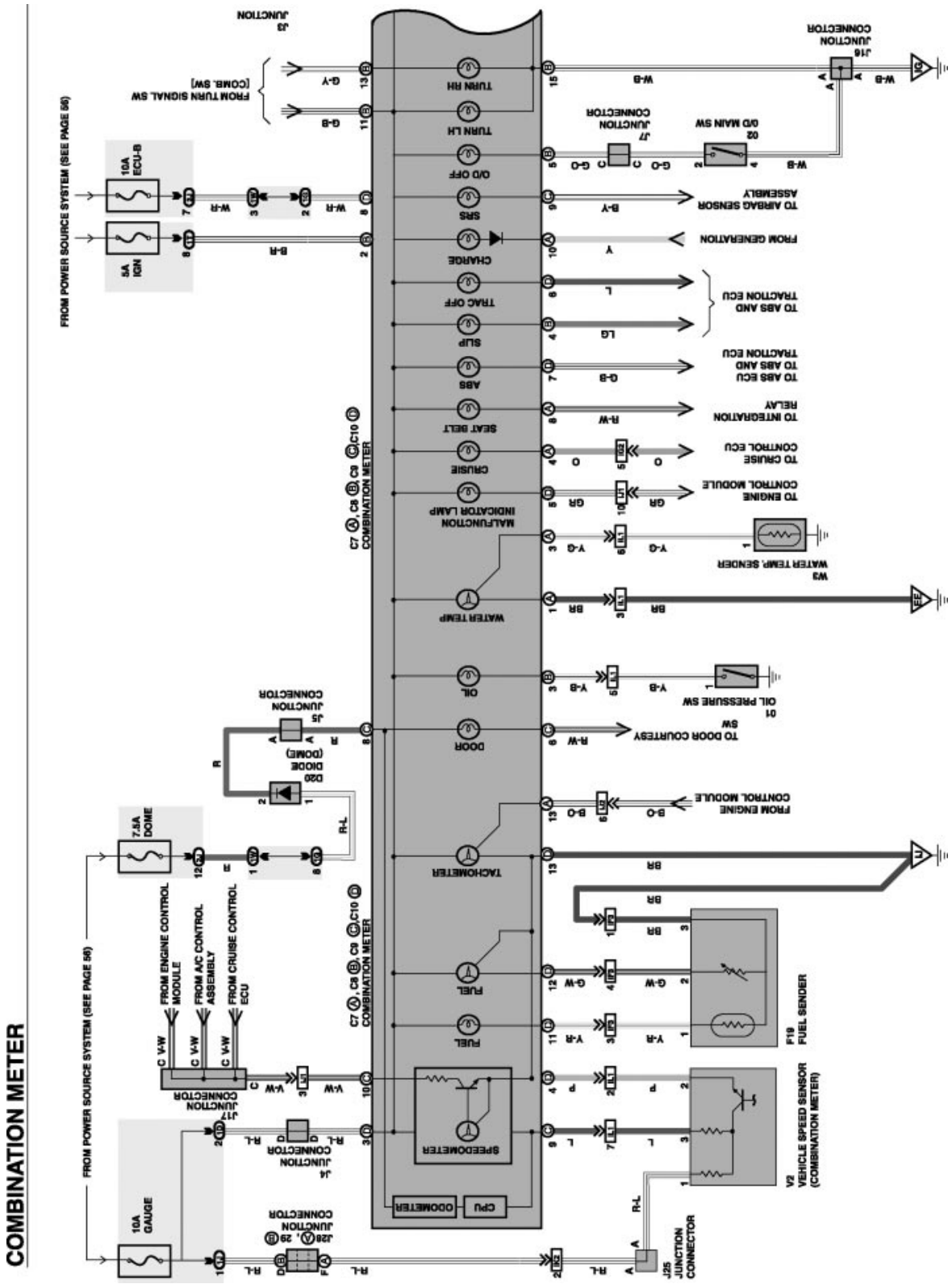
COMBINATION METER
FROM POWER SOURCE SYSTEM (SEE PAGE 56)
5A IGN
10A ECU-B
FROM TURN SIGNAL SW [COMB. SW]
J3 JUNCTION
TURN RH
TURN LH
O/D OFF
SRS
CHARGE
TRAC OFF
SLIP
ABS
SEAT BELT
CRUISE
MALFUNCTION INDICATOR LAMP
WATER TEMP.
OIL
DOOR
TACHOMETER
FUEL
FUEL
SPEEDOMETER
CPU
ODOMETER
C7 A, C8 B, C9 C, C10 D COMBINATION METER
FROM ENGINE CONTROL MODULE
FROM A/C CONTROL ASSEMBLY
FROM CRUISE CONTROL ECU
J17 JUNCTION CONNECTOR
J14 JUNCTION CONNECTOR
J28 A, 29 B JUNCTION CONNECTOR
10A GAUGE
7.5A DOME
D20 DIODE (DOME)
J5 JUNCTION CONNECTOR
FROM ENGINE CONTROL MODULE
TO DOOR COURTESY SW
01 OIL PRESSURE SW
W3 WATER TEMP. SENDER
TO ENGINE CONTROL MODULE
TO CRUISE CONTROL ECU
TO INTEGRATION RELAY
TO ABS ECU
TO ABS AND TRACTION ECU
TO ABS AND TRACTION ECU
FROM GENERATION
TO AIRBAG SENSOR ASSEMBLY
02 O/D MAIN SW
J7 JUNCTION CONNECTOR
J16 JUNCTION CONNECTOR
F19 FUEL SENDER
V2 VEHICLE SPEED SENSOR (COMBINATION METER)
J25 JUNCTION CONNECTOR

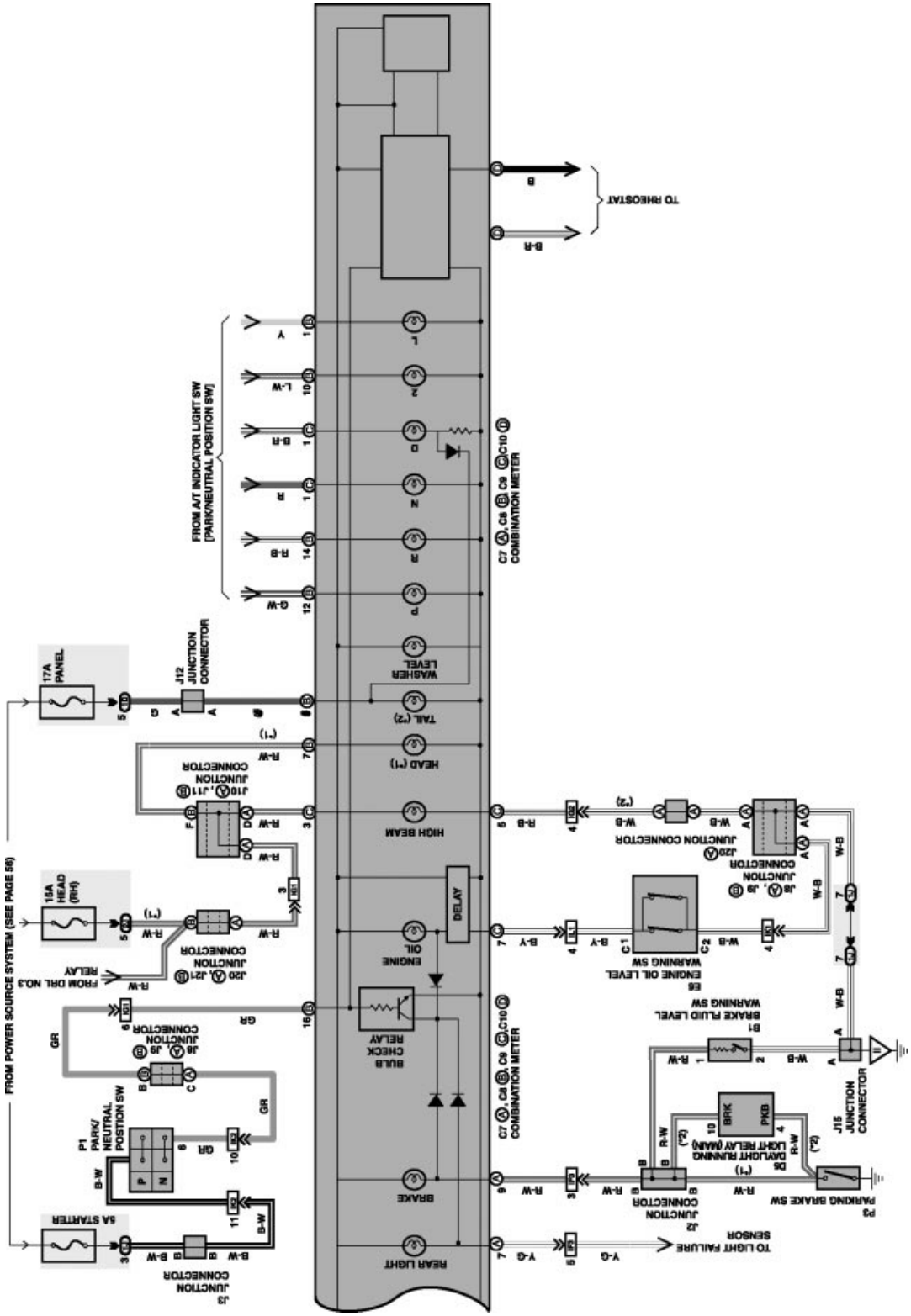
FROM POWER SOURCE SYSTEM (SEE PAGE 56)
5A STARTER
J3 JUNCTION CONNECTOR
P1 PARK/ NEUTRAL POSITION SW
J6 J9 JUNCTION CONNECTOR
J20 J21 JUNCTION CONNECTOR
FROM DRL NO.3 RELAY
15A HEAD (RH)
J10 J11 JUNCTION CONNECTOR
J12 JUNCTION CONNECTOR
17A PANEL
FROM A/T INDICATOR LIGHT SW [PARK/NEUTRAL POSITION SW]
C7 C8 C9 C10 COMBINATION METER
REAR LIGHT
BRAKE
BULB CHECK RELAY
ENGINE OIL
DELAY
HIGH BEAM
HEAD (*1)
TAIL (*2)
WASHER LEVEL
TO RHEOSTAT
J2 JUNCTION CONNECTOR
TO LIGHT FAILURE SENSOR
P3 PARKING BRAKE SW
DAYLIGHT RUNNING LIGHT RELAY (MAIN)
J15 JUNCTION CONNECTOR
B1 BRAKE FLUID LEVEL WARNING SW
E6 ENGINE OIL LEVEL WARNING SW
J18 J19 JUNCTION CONNECTOR
J20 JUNCTION CONNECTOR

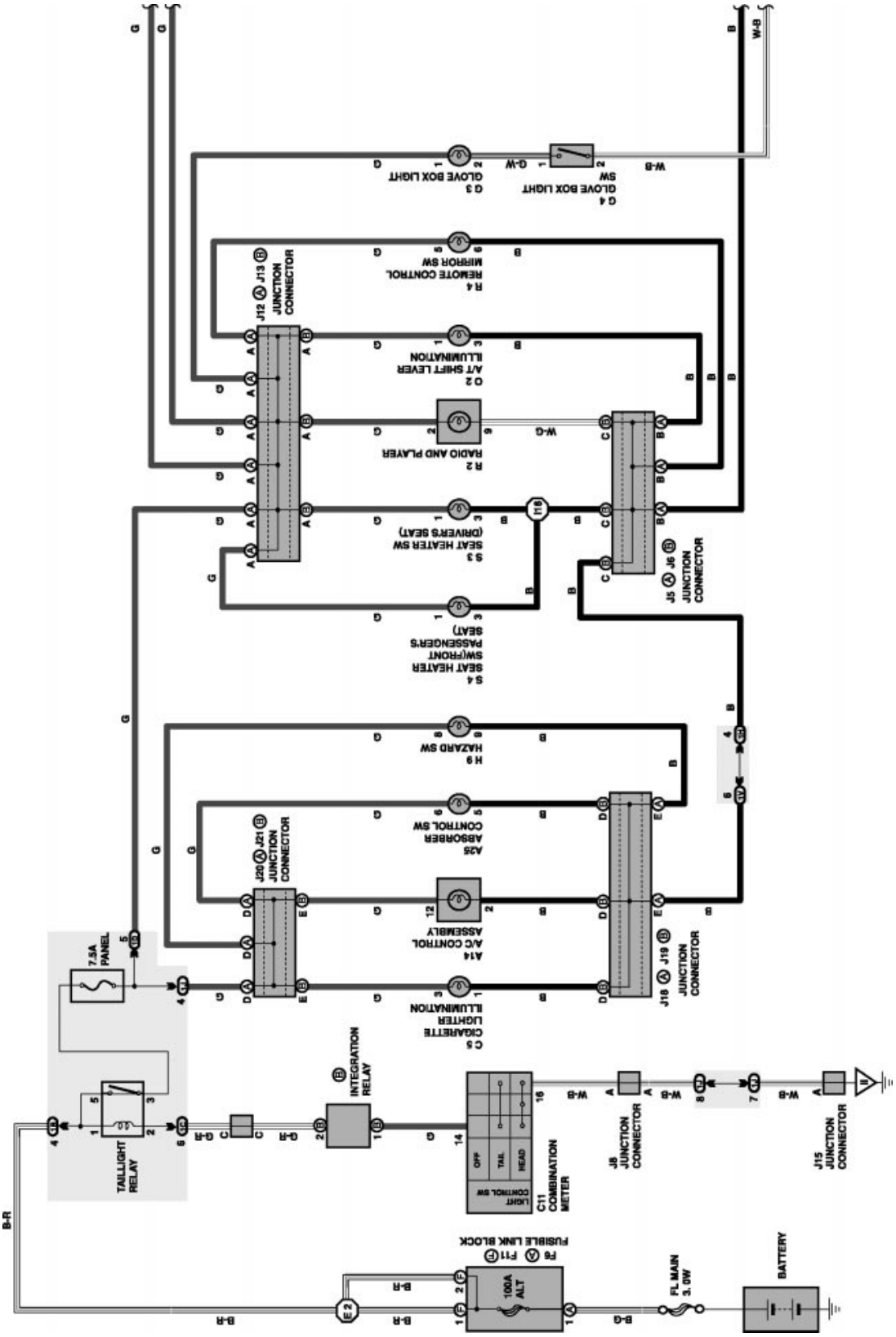
G 4
GLOVE BOX LIGHT SW
G 3
GLOVE BOX LIGHT
R 4
REMOTE CONTROL MIRROR SW
O 2
A/T SHIFT LEVER ILLUMINATION
R 2
RADIO AND PLAYER
S 3
SEAT HEATER SW (DRIVER'S SEAT)
S 4
SEAT HEATER SW(FRONT PASSENGER'S SEAT)
H 9
HAZARD SW
A25
ABSORBER CONTROL SW
A14
A/C CONTROL ASSEMBLY
C 5
CIGARETTE LIGHTER ILLUMINATION
J12 J13 JUNCTION CONNECTOR
J5 J6 JUNCTION CONNECTOR
J20 J21 JUNCTION CONNECTOR
J18 J19 JUNCTION CONNECTOR
7.5A PANEL
TAILLIGHT RELAY
INTEGRATION RELAY
C11 COMBINATION METER
LIGHT CONTROL SW
OFF
TAIL
HEAD
J8 JUNCTION CONNECTOR
J15 JUNCTION CONNECTOR
FUSIBLE LINK BLOCK
F6 F11
100A ALT
FL MAIN 3.0W
BATTERY
E2
B-R
G-R
B-G
W-B
W-G
G-W

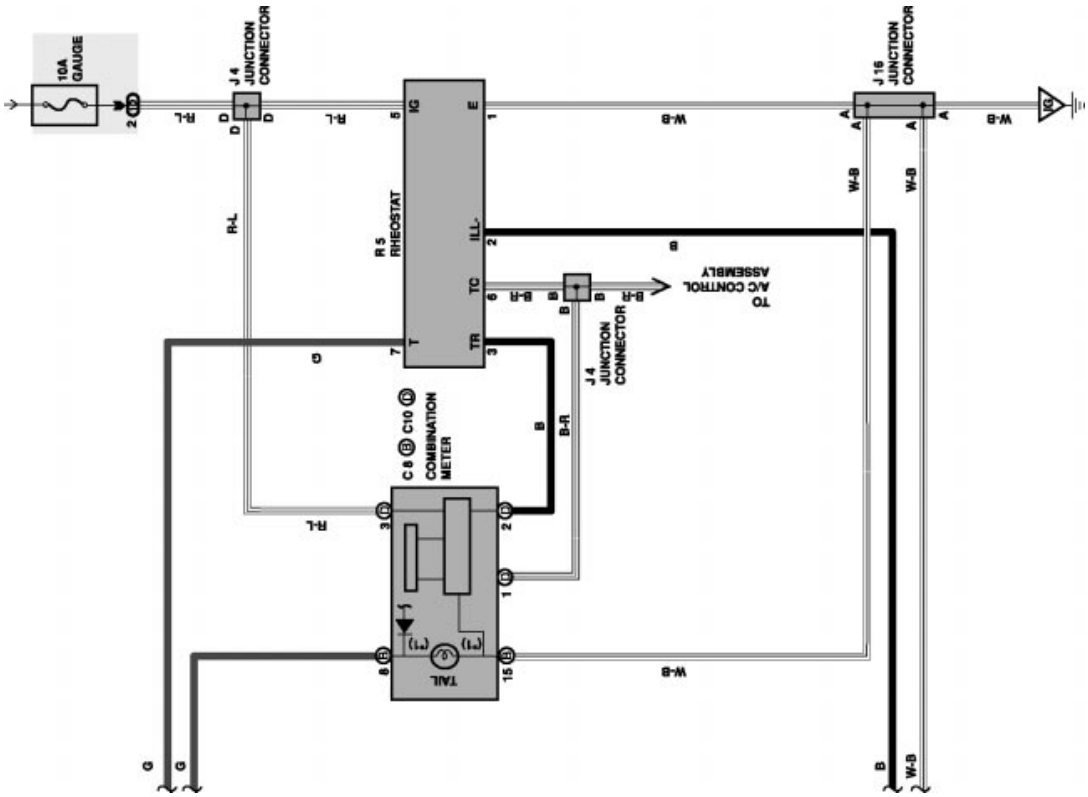
10A
GAUGE
J 4
JUNCTION
CONNECTOR
R 5
RHEOSTAT
IG
E
ILL
TC
TR
T
C 8
C10
COMBINATION
METER
TAIL
J 4
JUNCTION
CONNECTOR
TO
A/C CONTROL
ASSEMBLY
J 16
JUNCTION
CONNECTOR
IG
R-L
W-B
B-R
B
G

Step 4: Isolate the Trouble

1. On the System Circuit Diagram, **circle the possible problem areas.**

2. List the first 2 items you will inspect. Mark the **type of inspection** (visual, voltmeter, ohmmeter, ammeter or jumper wire) and write in the **inspection item** (component, connector with pin numbers, wire color, etc.)

3. List the **specifications**, the **measured result** and **your diagnosis** in the appropriate column.

4. If the initial checks lead you to make **additional inspections**, list them in the shaded area.

Inspection Type	Inspection Item	Specification	Measured Result	OK or Bad
❑ Visual ❑ Voltmeter ❑ Ohmmeter ❑ Ammeter ❑ Jumper Wire				
❑ Visual ❑ Voltmeter ❑ Ohmmeter ❑ Ammeter ❑ Jumper Wire				
❑ Visual ❑ Voltmeter ❑ Ohmmeter ❑ Ammeter ❑ Jumper Wire				
❑ Visual ❑ Voltmeter ❑ Ohmmeter ❑ Ammeter ❑ Jumper Wire				
❑ Visual ❑ Voltmeter ❑ Ohmmeter ❑ Ammeter ❑ Jumper Wire				
❑ Visual ❑ Voltmeter ❑ Ohmmeter ❑ Ammeter ❑ Jumper Wire				
❑ Visual ❑ Voltmeter ❑ Ohmmeter ❑ Ammeter ❑ Jumper Wire				
❑ Visual ❑ Voltmeter ❑ Ohmmeter ❑ Ammeter ❑ Jumper Wire				

Step 5: Correct the Trouble

Cause of problem and location:	**Instructor OK**

Step 6: Check for Proper Operation

❑ Re-test the system/circuit to verify the repair

ES 300 Body Electrical Simulator - Fault Switch #15

Name: _____ Date: _____

Review this sheet as you are doing the *ES 300 Body Electrical Simulator - Fault Switch #15* worksheet. Check each category after viewing the instructor's presentation and completing the worksheet. Ask the instructor if you have questions regarding the topics provided below. Additional space is provided under topic for you to list any other concerns that you would like your instructor to address. The comments section is provided for your personal comments, information, questions, etc.

I have questions

I know I can

Topic			Comment

Notes

WORKSHEET 5-16
ES 300 Body Electrical Simulator - Fault Switch #16

Vehicle	Year/Prod. Date	Engine	Transmission

Problem Description: **WIRELESS DOOR LOCKS INOP/TDS WON'T ARM**

❑ **Problem Found** (check one): ❑ **Intermittent** ❑ **Continuous**

❑ **No Problem Found**—Operation is normal.

Explanation: _____

Step 2: Determine the Related Symptoms

1. Using the EWD, read the System Outline to see how the circuit is supposed to operate (if available).

2. Determine if it affects **ALL** or **PART** of the circuit.

   - **If all of the circuit is affected** check the operation of circuits which have common fuse/power sources and also circuits which use common grounding points.
   - **If only part(s) of the circuit** is affected, determine exactly which parts are OK and which are inoperative.

Circuit	OK or Bad	Observations

Step 3: Analyze the Symptoms

1. Based upon the original complaint, and your related symptoms checks, specifically identify the problem:

   _____

2. *On the following System Circuit Diagram:* Based upon your related symptom checks, use a highlighter to **trace current flow in the parts of the circuit that are OK.**

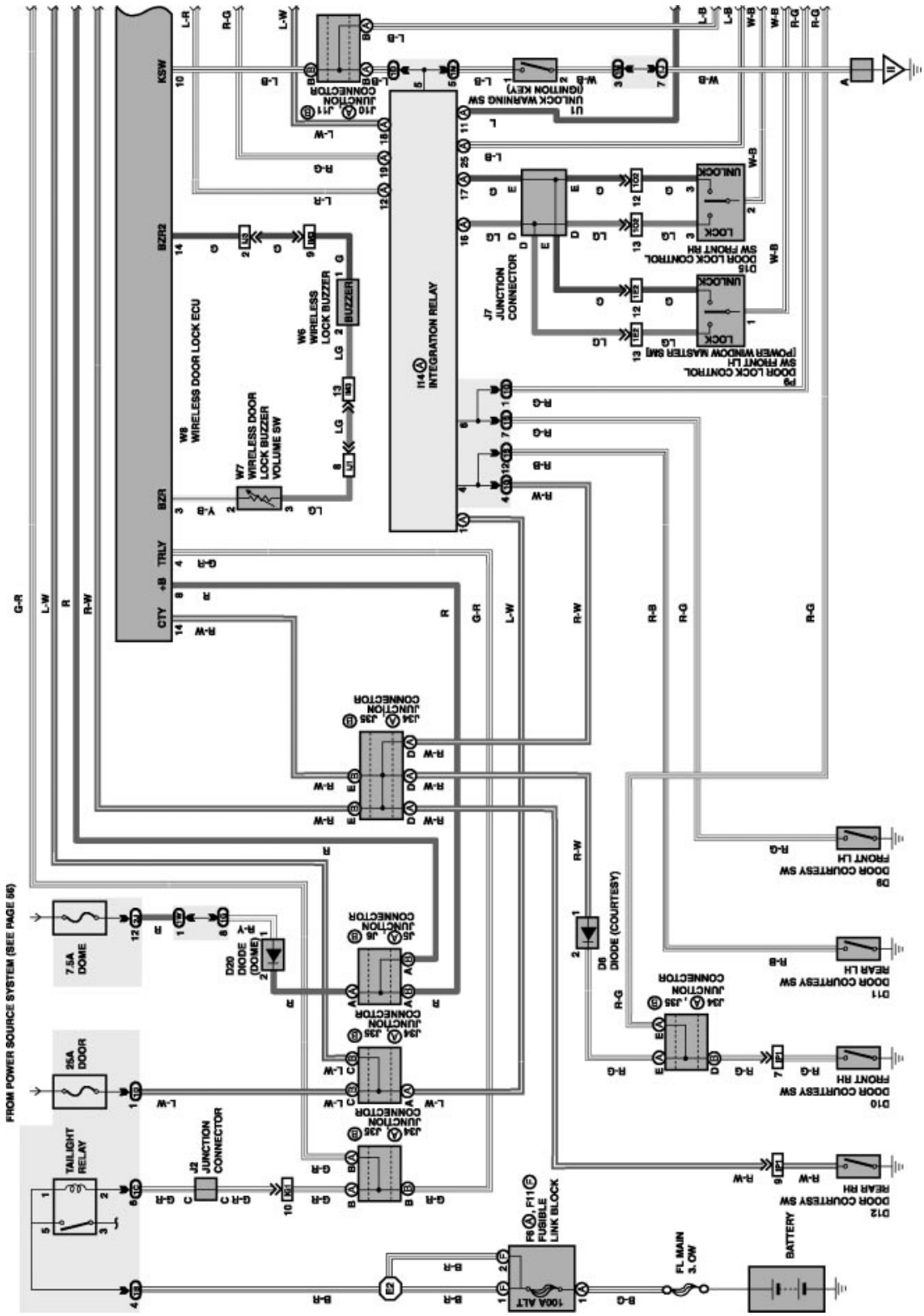
FROM POWER SOURCE SYSTEM (SEE PAGE 66)
7.5A DOME
25A DOOR
TAILLIGHT RELAY
J2 JUNCTION CONNECTOR
D20 DIODE (DOME)
D8 DIODE (COURTESY)
J34, J35 JUNCTION CONNECTOR
J45, J46 JUNCTION CONNECTOR
J10, J11 JUNCTION CONNECTOR
U1 UNLOCK WARNING SW (IGNITION KEY)
I14 INTEGRATION RELAY
J7 JUNCTION CONNECTOR
W6 WIRELESS LOCK BUZZER
W7 WIRELESS DOOR LOCK BUZZER VOLUME SW
W8 WIRELESS DOOR LOCK ECU
D15 DOOR LOCK CONTROL SW FRONT RH
P9 DOOR LOCK CONTROL SW FRONT LH (POWER WINDOW MASTER SW)
D9 DOOR COURTESY SW FRONT LH
D11 DOOR COURTESY SW REAR LH
D10 DOOR COURTESY SW FRONT RH
D12 DOOR COURTESY SW REAR RH
F8, F11 FUSIBLE LINK BLOCK
100A ALT
FL MAIN 3.0W
BATTERY

Step 4: Isolate the Trouble

1. On the System Circuit Diagram, **circle the possible problem areas.**

2. List the first 2 items you will inspect. Mark the **type of inspection** (visual, voltmeter, ohmmeter, ammeter or jumper wire) and write in the **inspection item** (component, connector with pin numbers, wire color, etc.)

3. List the **specifications**, the **measured result** and **your diagnosis** in the appropriate column.

4. If the initial checks lead you to make **additional inspections**, list them in the shaded area.

Inspection Type	Inspection Item	Specification	Measured Result	OK or Bad
❑ Visual ❑ Voltmeter ❑ Ohmmeter ❑ Ammeter ❑ Jumper Wire				
❑ Visual ❑ Voltmeter ❑ Ohmmeter ❑ Ammeter ❑ Jumper Wire				
❑ Visual ❑ Voltmeter ❑ Ohmmeter ❑ Ammeter ❑ Jumper Wire				
❑ Visual ❑ Voltmeter ❑ Ohmmeter ❑ Ammeter ❑ Jumper Wire				
❑ Visual ❑ Voltmeter ❑ Ohmmeter ❑ Ammeter ❑ Jumper Wire				
❑ Visual ❑ Voltmeter ❑ Ohmmeter ❑ Ammeter ❑ Jumper Wire				
❑ Visual ❑ Voltmeter ❑ Ohmmeter ❑ Ammeter ❑ Jumper Wire				
❑ Visual ❑ Voltmeter ❑ Ohmmeter ❑ Ammeter ❑ Jumper Wire				

Step 5: Correct the Trouble

Cause of problem and location:	**Instructor OK**

Step 6: Check for Proper Operation

❑ Re-test the system/circuit to verify the repair

Notes

ES 300 Body Electrical Simulator - Fault Switch #16

Name: _____ Date: _____

Review this sheet as you are doing the *ES 300 Body Electrical Simulator - Fault Switch #16* worksheet. Check each category after viewing the instructor's presentation and completing the worksheet. Ask the instructor if you have questions regarding the topics provided below. Additional space is provided under topic for you to list any other concerns that you would like your instructor to address. The comments section is provided for your personal comments, information, questions, etc.

I have questions

I know I can

Topic			Comment

Notes

WORKSHEET 5-17
ES 300 Body Electrical Simulator - Fault Switch #17

Vehicle	Year/Prod. Date	Engine	Transmission

Problem Description: **INTERIOR LIGHT DIM**

❑ **Problem Found** (check one): ❑ **Intermittent** ❑ **Continuous**

❑ **No Problem Found**—Operation is normal.

Explanation: _____

Step 2: Determine the Related Symptoms

1. Using the EWD, read the System Outline to see how the circuit is supposed to operate (if available).

2. Determine if it affects **ALL** or **PART** of the circuit.

   - **If all of the circuit is affected** check the operation of circuits which have common fuse/power sources and also circuits which use common grounding points.
   - **If only part(s) of the circuit** is affected, determine exactly which parts are OK and which are inoperative.

Circuit	OK or Bad	Observations

Step 3: Analyze the Symptoms

1. Based upon the original complaint, and your related symptoms checks, specifically identify the problem:

   _____

2. *On the following System Circuit Diagram:* Based upon your related symptom checks, use a highlighter to **trace current flow in the parts of the circuit that are OK.**

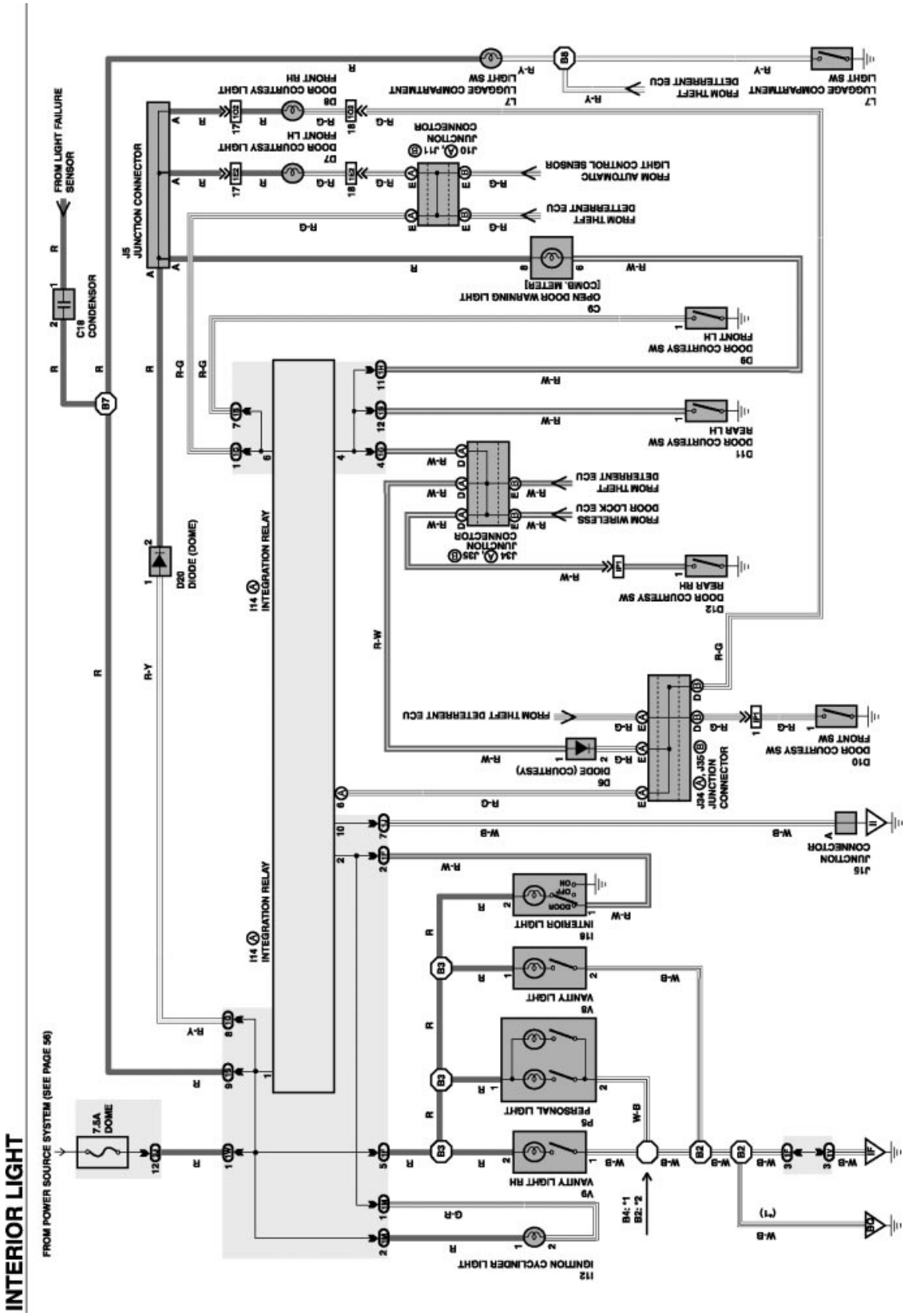
INTERIOR LIGHT
FROM POWER SOURCE SYSTEM (SEE PAGE 56)
7.5A DOME
I14 INTEGRATION RELAY
I14 INTEGRATION RELAY
D20 DIODE (DOME)
C10 CONDENSOR
FROM LIGHT FAILURE SENSOR
J5 JUNCTION CONNECTOR
I12 IGNITION CYCLINDER LIGHT
V9 VANITY LIGHT RH
P5 PERSONAL LIGHT
V8 VANITY LIGHT
I18 INTERIOR LIGHT
J15 JUNCTION CONNECTOR
J34, J35 JUNCTION CONNECTOR
D6 DIODE (COURTESY)
FROM THEFT DETERRENT ECU
D10 DOOR COURTESY SW FRONT SW
D12 DOOR COURTESY SW REAR RH
J24, J25 JUNCTION CONNECTOR
FROM WIRELESS DOOR LOCK ECU
FROM THEFT DETERRENT ECU
D11 DOOR COURTESY SW REAR LH
D9 DOOR COURTESY SW FRONT LH
C9 OPEN DOOR WARNING LIGHT [COMB. METER]
FROM THEFT DETERRENT ECU
FROM AUTOMATIC LIGHT CONTROL SENSOR
J10, J11 JUNCTION CONNECTOR
D7 DOOR COURTESY LIGHT FRONT LH
D8 DOOR COURTESY LIGHT FRONT RH
L7 LUGGAGE COMPARTMENT LIGHT SW
FROM THEFT DETERRENT ECU
L7 LUGGAGE COMPARTMENT LIGHT SW
B4: *1
B2: *2

Step 4: Isolate the Trouble

1. On the System Circuit Diagram, **circle the possible problem areas.**

2. List the first 2 items you will inspect. Mark the **type of inspection** (visual, voltmeter, ohmmeter, ammeter or jumper wire) and write in the **inspection item** (component, connector with pin numbers, wire color, etc.)

3. List the **specifications**, the **measured result** and **your diagnosis** in the appropriate column.

4. If the initial checks lead you to make **additional inspections**, list them in the shaded area.

Inspection Type	Inspection Item	Specification	Measured Result	OK or Bad
❑ Visual ❑ Voltmeter ❑ Ohmmeter ❑ Ammeter ❑ Jumper Wire				
❑ Visual ❑ Voltmeter ❑ Ohmmeter ❑ Ammeter ❑ Jumper Wire				
❑ Visual ❑ Voltmeter ❑ Ohmmeter ❑ Ammeter ❑ Jumper Wire				
❑ Visual ❑ Voltmeter ❑ Ohmmeter ❑ Ammeter ❑ Jumper Wire				
❑ Visual ❑ Voltmeter ❑ Ohmmeter ❑ Ammeter ❑ Jumper Wire				
❑ Visual ❑ Voltmeter ❑ Ohmmeter ❑ Ammeter ❑ Jumper Wire				
❑ Visual ❑ Voltmeter ❑ Ohmmeter ❑ Ammeter ❑ Jumper Wire				
❑ Visual ❑ Voltmeter ❑ Ohmmeter ❑ Ammeter ❑ Jumper Wire				

Step 5: Correct the Trouble

Cause of problem and location:	**Instructor OK**

Step 6: Check for Proper Operation

❑ Re-test the system/circuit to verify the repair

Notes

ES 300 Body Electrical Simulator - Fault Switch #17

Name: _____ Date: _____

Review this sheet as you are doing the *ES 300 Body Electrical Simulator - Fault Switch #17* worksheet. Check each category after viewing the instructor's presentation and completing the worksheet. Ask the instructor if you have questions regarding the topics provided below. Additional space is provided under topic for you to list any other concerns that you would like your instructor to address. The comments section is provided for your personal comments, information, questions, etc.

I have questions

I know I can

Topic			Comment

Notes

WORKSHEET 5-18
ES 300 Body Electrical Simulator - Fault Switch #18

Vehicle	Year/Prod. Date	Engine	Transmission

Problem Description: **COMBINATION METER ACTS FUNNY**

❑ **Problem Found** (check one): ❑ **Intermittent** ❑ **Continuous**

❑ **No Problem Found**—Operation is normal.

Explanation: _____

Step 2: Determine the Related Symptoms

1. Using the EWD, read the System Outline to see how the circuit is supposed to operate (if available).

2. Determine if it affects **ALL** or **PART** of the circuit.

   - **If all of the circuit is affected** check the operation of circuits which have common fuse/power sources and also circuits which use common grounding points.
   - **If only part(s) of the circuit** is affected, determine exactly which parts are OK and which are inoperative.

Circuit	OK or Bad	Observations

Step 3: Analyze the Symptoms

1. Based upon the original complaint, and your related symptoms checks, specifically identify the problem:

   _____

2. *On the following System Circuit Diagram:* Based upon your related symptom checks, use a highlighter to **trace current flow in the parts of the circuit that are OK.**

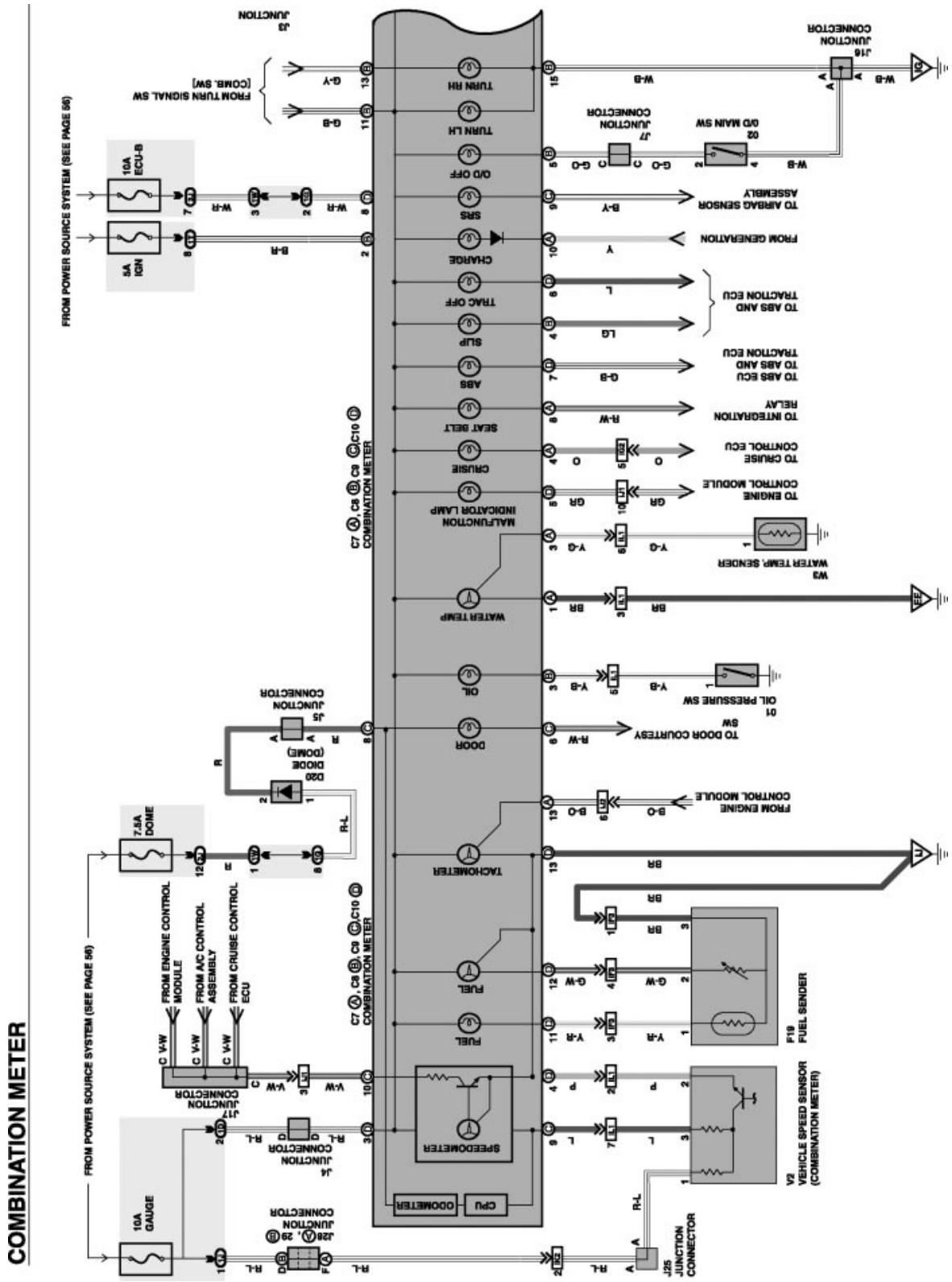
COMBINATION METER
FROM POWER SOURCE SYSTEM (SEE PAGE 56)
10A GAUGE
7.5A DOME
5A IGN
10A ECU-B
C7 A, C8 B, C9 C, C10 D
COMBINATION METER
SPEEDOMETER
CPU
ODOMETER
TACHOMETER
FUEL
FUEL
WATER TEMP
OIL
DOOR
SEAT BELT
CRUISE
MALFUNCTION INDICATOR LAMP
SLIP
TRAC OFF
ABS
CHARGE
SRS
O/D OFF
TURN L.H
TURN RH
FROM ENGINE CONTROL MODULE
FROM A/C CONTROL ASSEMBLY
FROM CRUISE CONTROL ECU
JUNCTION CONNECTOR
J17
J14
J25 JUNCTION CONNECTOR
J28 A, 29 B
D20 DIODE (DOME)
J5
J3
J7
J16
FROM TURN SIGNAL SW [COMB. SW]
TO DOOR COURTESY SW
OIL PRESSURE SW
01
FROM ENGINE CONTROL MODULE
TO ENGINE CONTROL MODULE
TO CRUISE CONTROL ECU
TO INTEGRATION RELAY
TO ABS ECU
TO ABS AND TRACTION ECU
TO ABS AND TRACTION ECU
FROM GENERATION
TO AIRBAG SENSOR ASSEMBLY
O/D MAIN SW
02
W3 WATER TEMP. SENDER
F19 FUEL SENDER
V2 VEHICLE SPEED SENSOR (COMBINATION METER)

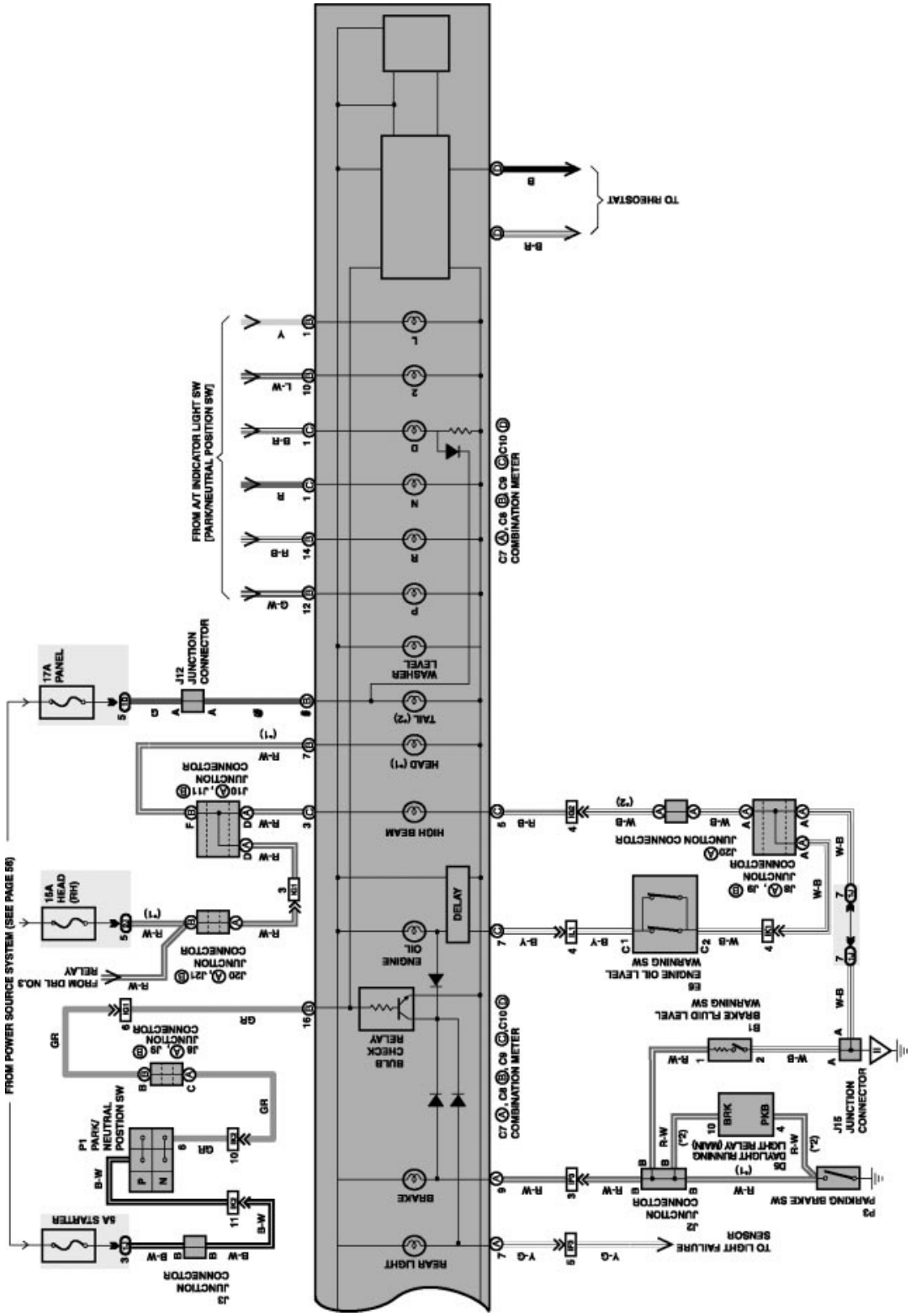
FROM POWER SOURCE SYSTEM (SEE PAGE 56)
5A STARTER
J3 JUNCTION CONNECTOR
P1 PARK/ NEUTRAL POSITION SW
J6 JUNCTION CONNECTOR
J20 JUNCTION CONNECTOR
FROM DRL NO.3 RELAY
15A HEAD (RH)
J10 JUNCTION CONNECTOR
J12 JUNCTION CONNECTOR
17A PANEL
FROM A/T INDICATOR LIGHT SW [PARK/NEUTRAL POSITION SW]
C7 C8 C9 C10 COMBINATION METER
REAR LIGHT
BRAKE
BULB CHECK RELAY
ENGINE OIL
DELAY
HIGH BEAM
HEAD (*1)
TAIL (*2)
WASHER LEVEL
TO RHEOSTAT
TO LIGHT FAILURE SENSOR
J2 JUNCTION CONNECTOR
DAYLIGHT RUNNING LIGHT RELAY (MAIN)
PARKING BRAKE SW
J15 JUNCTION CONNECTOR
E6 ENGINE OIL LEVEL WARNING SW
B1 BRAKE FLUID LEVEL WARNING SW
J25 JUNCTION CONNECTOR
J18 JUNCTION CONNECTOR

Step 4: Isolate the Trouble

1. On the System Circuit Diagram, **circle the possible problem areas.**

2. List the first 2 items you will inspect. Mark the **type of inspection** (visual, voltmeter, ohmmeter, ammeter or jumper wire) and write in the **inspection item** (component, connector with pin numbers, wire color, etc.)

3. List the **specifications**, the **measured result** and **your diagnosis** in the appropriate column.

4. If the initial checks lead you to make **additional inspections**, list them in the shaded area.

Inspection Type	Inspection Item	Specification	Measured Result	OK or Bad
❑ Visual ❑ Voltmeter ❑ Ohmmeter ❑ Ammeter ❑ Jumper Wire				
❑ Visual ❑ Voltmeter ❑ Ohmmeter ❑ Ammeter ❑ Jumper Wire				
❑ Visual ❑ Voltmeter ❑ Ohmmeter ❑ Ammeter ❑ Jumper Wire				
❑ Visual ❑ Voltmeter ❑ Ohmmeter ❑ Ammeter ❑ Jumper Wire				
❑ Visual ❑ Voltmeter ❑ Ohmmeter ❑ Ammeter ❑ Jumper Wire				
❑ Visual ❑ Voltmeter ❑ Ohmmeter ❑ Ammeter ❑ Jumper Wire				
❑ Visual ❑ Voltmeter ❑ Ohmmeter ❑ Ammeter ❑ Jumper Wire				
❑ Visual ❑ Voltmeter ❑ Ohmmeter ❑ Ammeter ❑ Jumper Wire				

Step 5: Correct the Trouble

Cause of problem and location:	**Instructor OK**

Step 6: Check for Proper Operation

❑ Re-test the system/circuit to verify the repair

ES 300 Body Electrical Simulator - Fault Switch #18

Name: _____ Date: _____

Review this sheet as you are doing the *ES 300 Body Electrical Simulator - Fault Switch #18* worksheet. Check each category after viewing the instructor's presentation and completing the worksheet. Ask the instructor if you have questions regarding the topics provided below. Additional space is provided under topic for you to list any other concerns that you would like your instructor to address. The comments section is provided for your personal comments, information, questions, etc.

I have questions

I know I can

Topic			Comment

Notes

WORKSHEET 5-19
ES 300 Body Electrical Simulator - Fault Switch #20

Vehicle	Year/Prod. Date	Engine	Transmission

Problem Description: **BLOWER SPEED NOT WORKING PROPERLY**

❑ **Problem Found** (check one): ❑ **Intermittent** ❑ **Continuous**

❑ **No Problem Found**—Operation is normal.

Explanation: _____

Step 2: Determine the Related Symptoms

1. Using the EWD, read the System Outline to see how the circuit is supposed to operate (if available).

2. Determine if it affects **ALL** or **PART** of the circuit.

   - **If all of the circuit is affected** check the operation of circuits which have common fuse/power sources and also circuits which use common grounding points.
   - **If only part(s) of the circuit** is affected, determine exactly which parts are OK and which are inoperative.

Circuit	OK or Bad	Observations

Step 3: Analyze the Symptoms

1. Based upon the original complaint, and your related symptoms checks, specifically identify the problem:

   _____

2. *On the following System Circuit Diagram:* Based upon your related symptom checks, use a highlighter to **trace current flow in the parts of the circuit that are OK.**

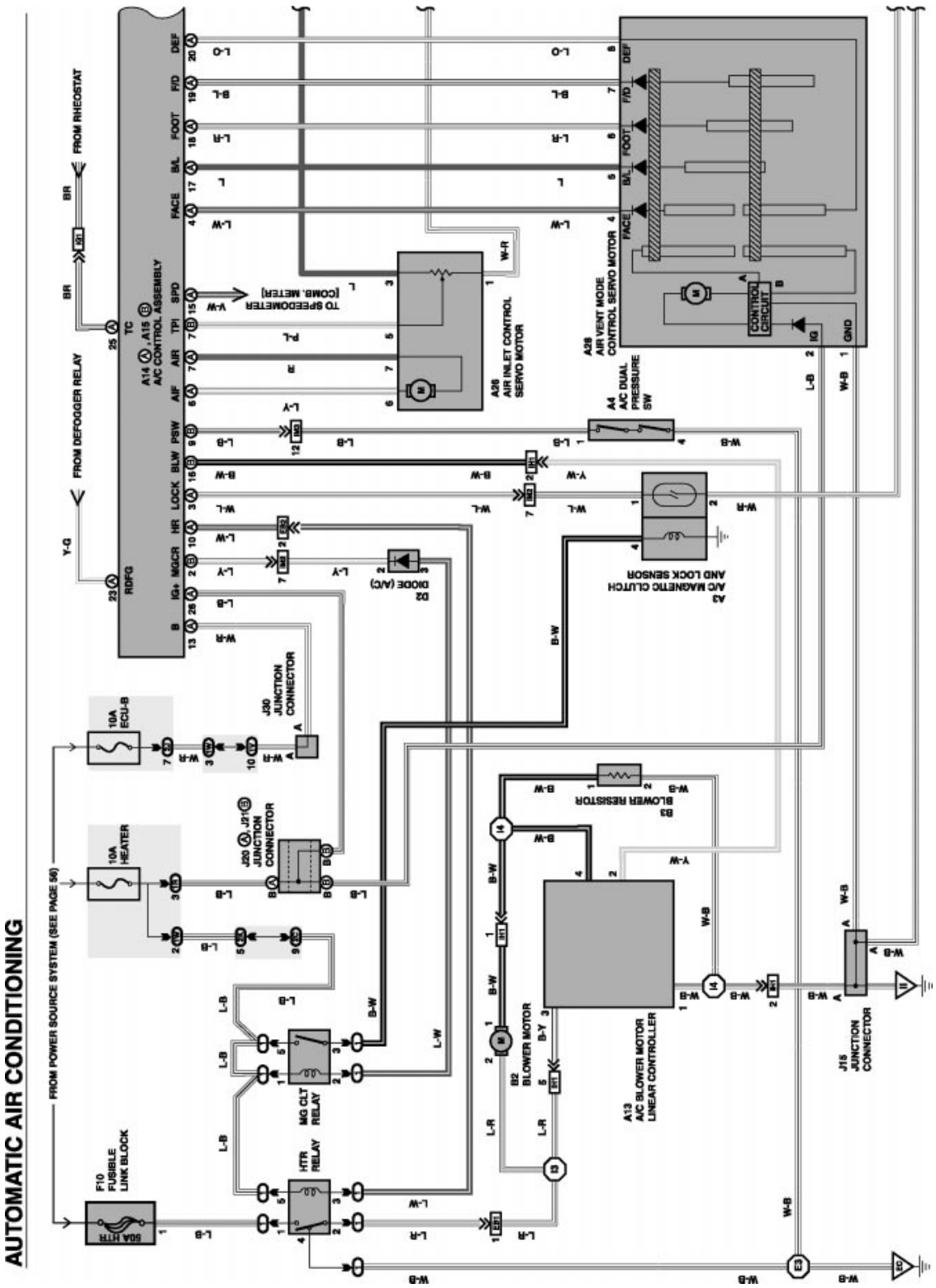
AUTOMATIC AIR CONDITIONING
FROM POWER SOURCE SYSTEM (SEE PAGE 56)
FROM RHEOSTAT
FROM DEFOGGER RELAY
A14, A15
A/C CONTROL ASSEMBLY
TO SPEEDOMETER
[COMB. METER]
A26
AIR INLET CONTROL
SERVO MOTOR
A28
AIR VENT MODE
CONTROL SERVO MOTOR
CONTROL CIRCUIT
A4
A/C DUAL
PRESSURE
SW
A3
A/C MAGNETIC CLUTCH
AND LOCK SENSOR
D2
DIODE (A/C)
J30
JUNCTION
CONNECTOR
10A
ECU-B
10A
HEATER
J20, J21
JUNCTION
CONNECTOR
B3
BLOWER RESISTOR
B2
BLOWER MOTOR
A13
A/C BLOWER MOTOR
LINEAR CONTROLLER
J15
JUNCTION
CONNECTOR
F10
FUSIBLE
LINK BLOCK
50A HTR
MG CLT
RELAY
HTR
RELAY

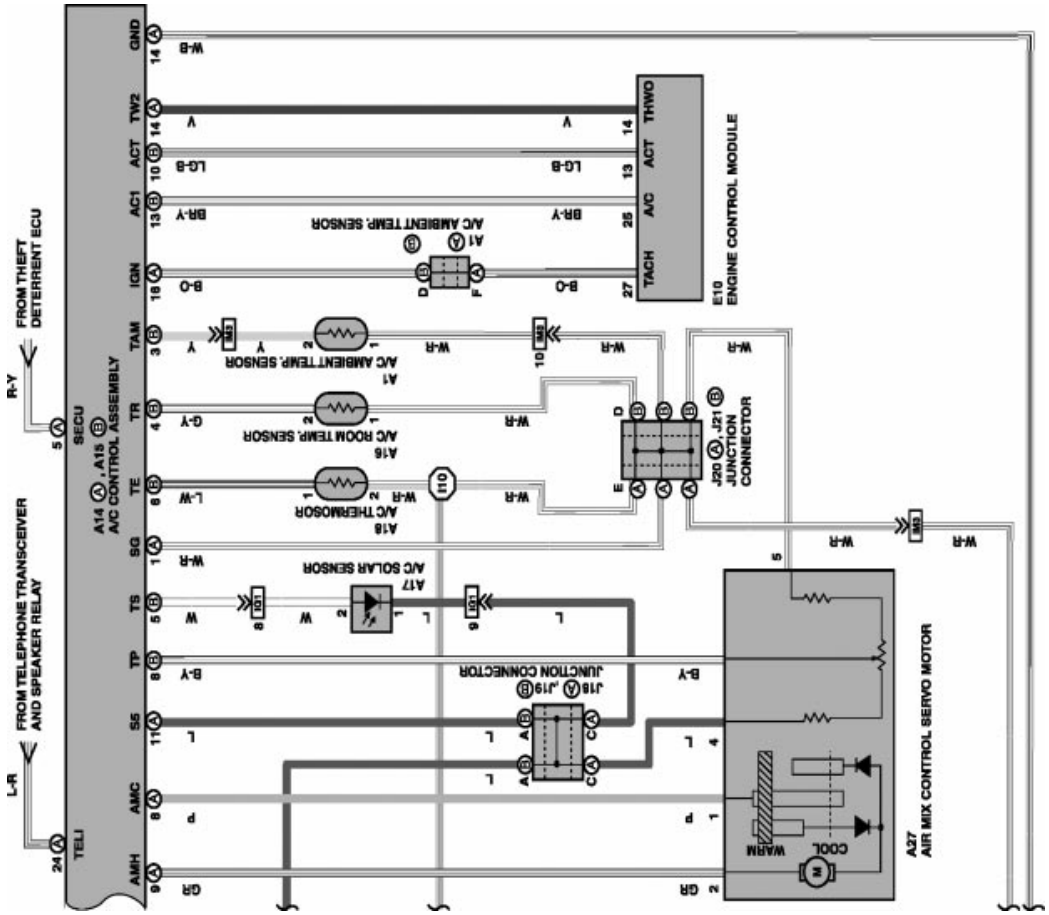
FROM THEFT DETERRENT ECU
R-Y
FROM TELEPHONE TRANSCEIVER AND SPEAKER RELAY
L-R
SECU
A14 , A15
A/C CONTROL ASSEMBLY
TELI
GND
TW2
ACT
AC1
IGN
TAM
TR
TE
SG
TS
TP
S5
AMC
AMH
A/C AMBIENT TEMP. SENSOR
A/C ROOM TEMP. SENSOR
A/C THERMOSOR
A/C SOLAR SENSOR
JUNCTION CONNECTOR
J18 , J19
J20 , J21
JUNCTION CONNECTOR
E10
ENGINE CONTROL MODULE
THWO
ACT
A/C
TACH
COOL
WARM
A27
AIR MIX CONTROL SERVO MOTOR

Step 4: Isolate the Trouble

1. On the System Circuit Diagram, **circle the possible problem areas.**

2. List the first 2 items you will inspect. Mark the **type of inspection** (visual, voltmeter, ohmmeter, ammeter or jumper wire) and write in the **inspection item** (component, connector with pin numbers, wire color, etc.)

3. List the **specifications**, the **measured result** and **your diagnosis** in the appropriate column.

4. If the initial checks lead you to make **additional inspections**, list them in the shaded area.

Inspection Type	Inspection Item	Specification	Measured Result	OK or Bad
❑ Visual ❑ Voltmeter ❑ Ohmmeter ❑ Ammeter ❑ Jumper Wire				
❑ Visual ❑ Voltmeter ❑ Ohmmeter ❑ Ammeter ❑ Jumper Wire				
❑ Visual ❑ Voltmeter ❑ Ohmmeter ❑ Ammeter ❑ Jumper Wire				
❑ Visual ❑ Voltmeter ❑ Ohmmeter ❑ Ammeter ❑ Jumper Wire				
❑ Visual ❑ Voltmeter ❑ Ohmmeter ❑ Ammeter ❑ Jumper Wire				
❑ Visual ❑ Voltmeter ❑ Ohmmeter ❑ Ammeter ❑ Jumper Wire				
❑ Visual ❑ Voltmeter ❑ Ohmmeter ❑ Ammeter ❑ Jumper Wire				
❑ Visual ❑ Voltmeter ❑ Ohmmeter ❑ Ammeter ❑ Jumper Wire				

Step 5: Correct the Trouble

Cause of problem and location:	**Instructor OK**

Step 6: Check for Proper Operation

❑ Re-test the system/circuit to verify the repair

ES 300 Body Electrical Simulator - Fault Switch #20

Name: _____ Date: _____

Review this sheet as you are doing the *ES 300 Body Electrical Simulator - Fault Switch #20* worksheet. Check each category after viewing the instructor's presentation and completing the worksheet. Ask the instructor if you have questions regarding the topics provided below. Additional space is provided under topic for you to list any other concerns that you would like your instructor to address. The comments section is provided for your personal comments, information, questions, etc.

I have questions

I know I can

Topic			Comment

Notes

General Development of Multiplexing

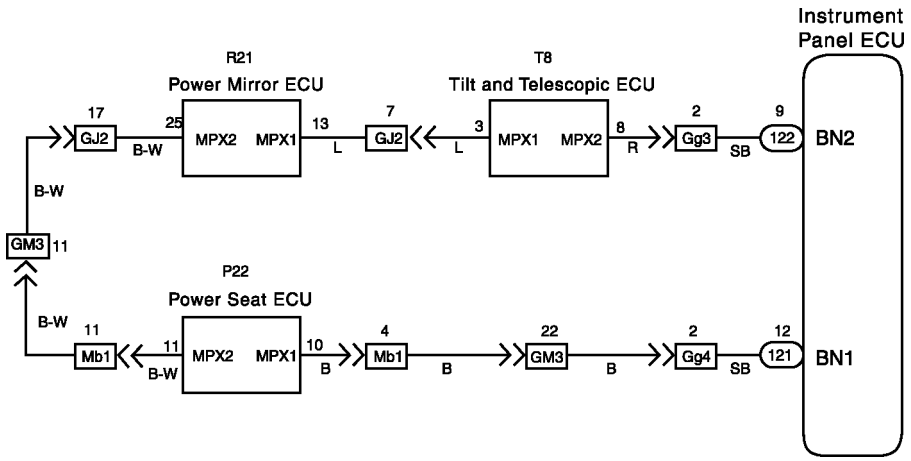

Learning Objectives:

1. To review the development of automotive multiplexing.
2. To discuss the application of multiplexing systems.
3. To correctly use the Hand-held tester to retrieve codes and access Freeze Frame Data.
4. To effectively use the Active Test Mode using the Hand-held tester.

Notes

Multiplexing

In-vehicle networking involving time division is also known as multiplexing. It is a method for transferring data among distributed electronic modules via a serial data bus. Serial data is electronically coded information which is transmitted by one computer and received and displayed by another computer. The term serial ***data*** implies that the information is digitally coded and transmitted in a series of data words.

Serial data gets its name from the fact that data parameters are transmitted, one after another, in series. The display on the receiving computer updates or refreshes once each data cycle, after all data has been received.

Transmission of Data and Rates

Using an analog/digital circuit, the transmitting computer digitizes the data from sensors, actuators, and other calculated information. Typically, this means that each sensor or actuator value is converted into a one byte (8 bits) binary word before it is transmitted to the receiving computer. The data transmission rate is referred to as the baud rate. Baud rate refers to the number of data bits that can be transmitted per second. For example, if a data stream has 12 parameters, and each parameter is converted into an 8 bit data word, the total size of the data transmission is 96 bits of data (12 words x 8 bits per word.) If this data can be transmitted once every second, the baud rate is 96 bits/second or 96 baud.

Without serial networking, inter-module communication requires dedicated, point-to-point wiring resulting in bulky, expensive, complex, and difficult to install wiring harnesses. Applying a serial data bus reduces the number of wires by combining the signals on a single wire through time division multiplexing. Information is sent to individual control modules that control each function, such as anti-lock braking, turn signals, power windows, dashboard displays, and audio systems.

Advances and Standards

In-vehicle networking provides system-level benefits, many of which are only beginning to be realized:

- A decreased number of dedicated wires is required for each function, and thus reduces the size of the wiring harness. System cost, weight, reliability, serviceability, and installation are improved.
- Common sensor data, such as vehicle speed, engine temperature, etc. are available on the network, so data can be shared, thus eliminating the need for redundant sensors.

- Networking allows greater vehicle content flexibility because functions can be added through software changes. Existing systems require an additional module or additional I/O pins for each function added.
- Car manufacturers are discovering new features that are enabled by networking. For example, multiplexing allows driver's preference for such things as ride firmness, seat positions, steering assist effort, mirror positions, and radio station presets.

Recently, there have been efforts to standardize protocols at the data link and physical layers. Systems designers are also seeing the benefits of standardized application layer protocols. Multiplexing Standards are also appearing in automotive applications. Examples include: SAE J1939, OSEK from the German automotive consortium, SDS from Honeywell, and DeviceNet from Allen-Bradley. These standards allow system designers to avoid low-level protocol details and focus on the application itself. However, the impact of this type of standardization is increased demand on the microcontrollers and protocol devices; and thus the need for efficient message handling and standardized protocol.

Typical Multiplexing System

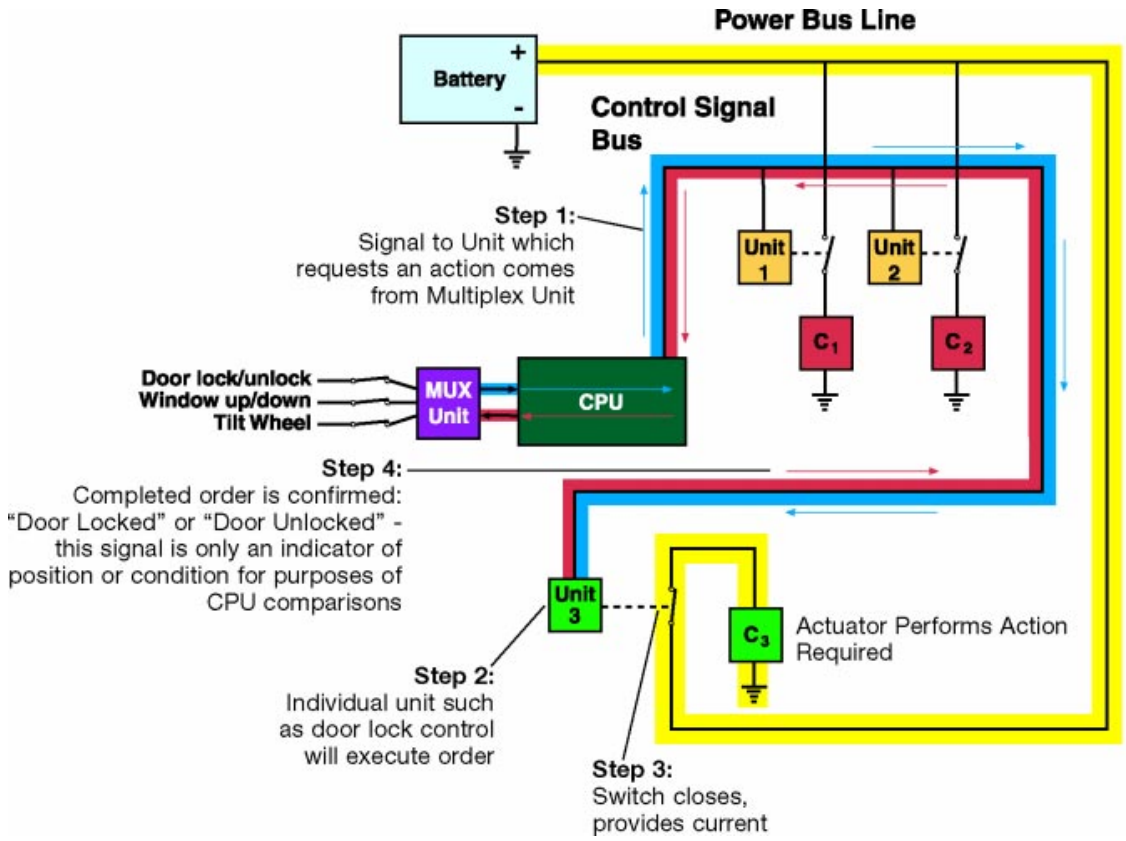

Fig. 6-1
L652f601

Early Designs

The early days of networking involved proprietary serial buses using generic UART (Universal Asynchronous Receiver/Transmitter) or custom devices. This type of networking was acceptable in the United States because the Big Three (Ford, GM, Chrysler) were vertically integrated and were not highly dependent on external suppliers.

However, in Europe and increasingly now in the U.S.A., car manufacturers utilize many external suppliers. Proprietary protocols pose many difficulties with suppliers who need many special system designs to conform to the different protocols. Standard protocols allow modules from many suppliers to easily link together forming a type of "open architecture." An open architecture will allow standardized diagnostic and emissions testers and will allow suppliers to benefit from economies of scale of mass-produced standard protocol devices.

These facts help to explain why diagnostics and systems designs were not widely published in many repair manuals or other forms of literature published by automotive manufacturers. Since the advent of standards the information regarding these multiplexing systems has become increasingly more accessible.

SAE Classifications/ Speeds

Class A

- Low Speed (<10 kbps [kilobits/second])
- Convenience features (entertainment, audio, trip computer, etc.)

Class B

- Medium Speed (10 kbps to 125 kbps)
- General information transfer (instrument cluster, vehicle speed, emissions data, etc.)

Class C

- High Speed (125 kbps to 1 Mbps [Megabits per second] or greater)
- Real-time control (powertrain control, vehicle dynamics, brake by wire)

Wiring Diagram for a Typical Class B Multiplex System

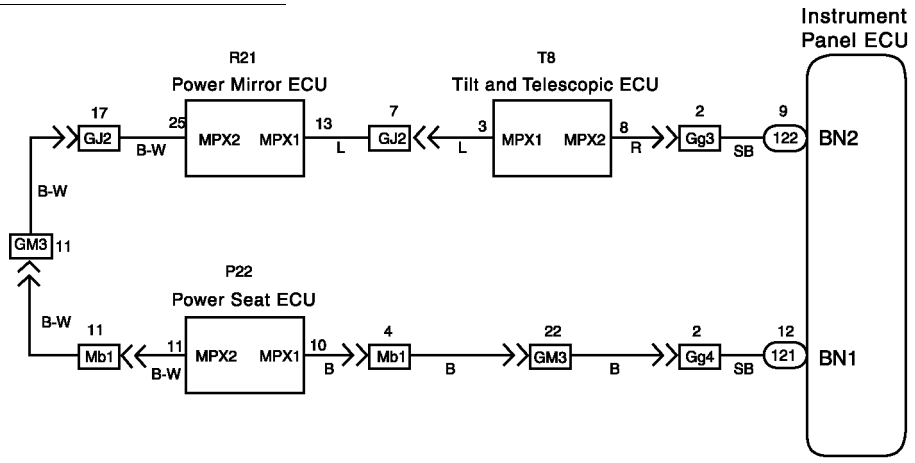

Fig. 6-2
L652f602

Lexus systems such as the one pictured here it is possible to view the signal transmissions to and from the control unit along the data links with an oscilloscope. Assuming that the scope is set at the appropriate capture rate the signal pattern will be displayed. Unfortunately, without signal printouts and engineering specifications these scope patterns cannot be fully analyzed. This type of diagnosis does tell the technician that communication is occurring. What it does not reveal is the nature of the communication or its accuracy. Nevertheless, it can be valuable when tracing the presence of a signal along a specific pathway—connector to connector. The first line of diagnostics when dealing with Lexus multiplexing must be the verification, the Repair Manual, and the Diagnostic Tester. Anything less is simply guess work.

Diagnostic Trouble Codes include SAE controlled codes and manufacturer controlled codes. SAE controlled codes must be set as prescribed by the SAE, while manufacturer controlled codes can be set freely by the manufacturer within the prescribed limits. There is also a check mode for technicians to simulate malfunction symptoms and to troubleshoot. Basically, the Body ECU monitors the communication within the network and triggers a code when there is an interruption in communication, a +B short, or a GND short.

Using the Lexus Diagnostic Tester

The use of the Lexus Diagnostic Tester for the diagnosis of multiplexing DTCs is explained in detail in the Repair Manual. As these systems evolve, changes occur from model year to model year. In order to avoid unnecessary repairs and loss of valuable shop time, it is very important that the technician read and understand the repair manual instructions for a particular model and year.

Example: In the 1998 LX 470 Repair Manual it is noted during the Pre-Check instructions that unless the Body ECU is functioning normally there is the "possibility" the diagnosis for other units will not be accurate. Also, there are conditions under which an accurate DTC will not be given even though the Body ECU is normal.

Next, there is a procedure for checking the Body ECU/CPU in order to determine whether or not it is working properly. It involves confirming the operation of the Body ECU and the Open Door Indicator. This procedure falls under the heading of "Basic Inspection". The important thing to keep in mind is that unless you can be sure that the ECU responsible for diagnostics is functioning properly, all other information may not be of value. There are also certain malfunction configurations where a DTC will not be detected.

Pre-Check

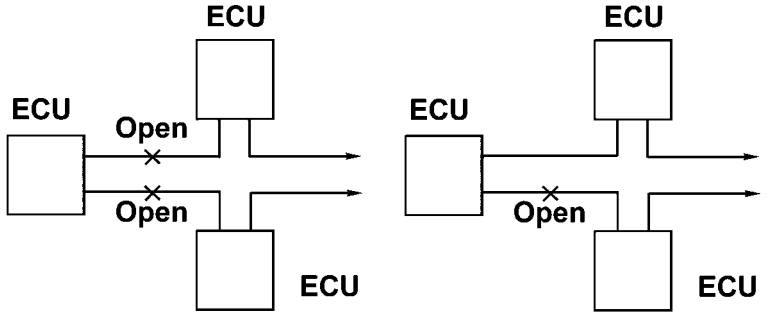

Two Opens will result in a DTC

One Open will Not

Fig. 6-3
L652f603

Circuit Operation

There are several layers of operation to consider when troubleshooting a Lexus multiplexing system. Let's take a look at the construction of a system. Keep in mind that these systems are very sensitive to electronic variables within the environment. Furthermore, we have mechanical operation of various components and these too can cause problems for the system. Take a look at a typical Tilt/Telescopic Switch. In this case it comes from an LX 470.

Now that the ECU has the signal from the switch it executes a command to the Telescopic motor. In this example, the command is "Contract". Remember, all positions of components (motors, switches) are known to the Instrument ECU. This memory function is one of the wonders of multiplexing; but it is also one of the potential problems. Why? Because all signals, confirmations, positions, ON/OFF settings must travel through the communication lines in order to make adjustments. If there are any breakdowns along these lines then the system will not function properly. Also, bear in mind that any "out of range" transmissions can be misinterpreted and the result will be a DTC, a malfunction, or an inoperative condition. Look at the following diagram as the ECU interacts with the motor in the Telescopic circuit.

Keep in mind that the procedures for diagnosing these systems may vary from year to year and from model to model. Once again, the diagnosis of any multiplex system should not be attempted without the Repair Manual in hand.

Circuit Operation Control and DTCs

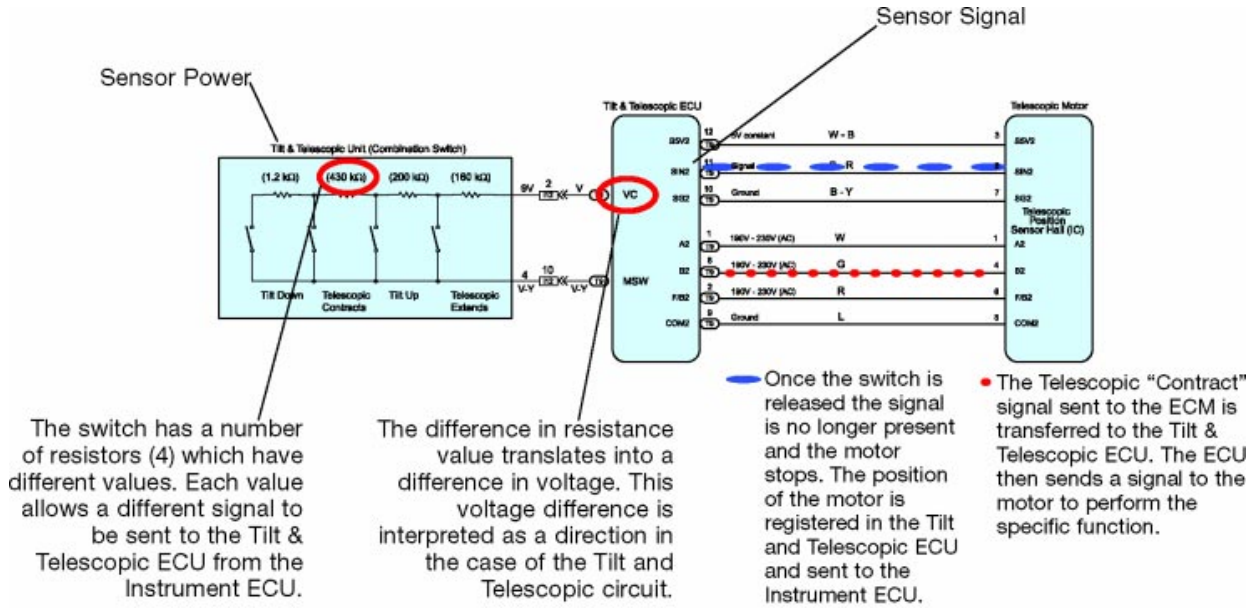

The switch has a number of resistors (4) which have different values. Each value allows a different signal to be sent to the Tilt & Telescopic ECU from the Instrument ECU.

The difference in resistance value translates into a difference in voltage. This voltage difference is interpreted as a direction in the case of the Tilt and Telescopic circuit.

The Data Link to your Diagnostic Tester can then determine and show you any DTCs

DIAG. TROUBLE CODES
ECU : TILT & TELESCO
Number of DTCs : 1
Tilt Postion Sensor or Tilt Motor Malfunction

*B2611 Telescopic Postion Sensor or Telescopic Motor Malfunction

ENTER = FREEZE FRAME
[EXIT] to Continue

Freeze Frame data shows the position of the steering column to be out of spec.

MOBD DATA LIST

TELSC POS.....4328
Up Limit.....MEM
UP LIMIT POS.....4200
Short Limit.....MEM
SHORT LIMIT POS.....4306
LONG LIMIT POS.....4142
LONG LIMIT.....MEM

Fig. 6-4
L652f604

Multiplexing Communication Bus

1998 LX 470 EWD p. 136

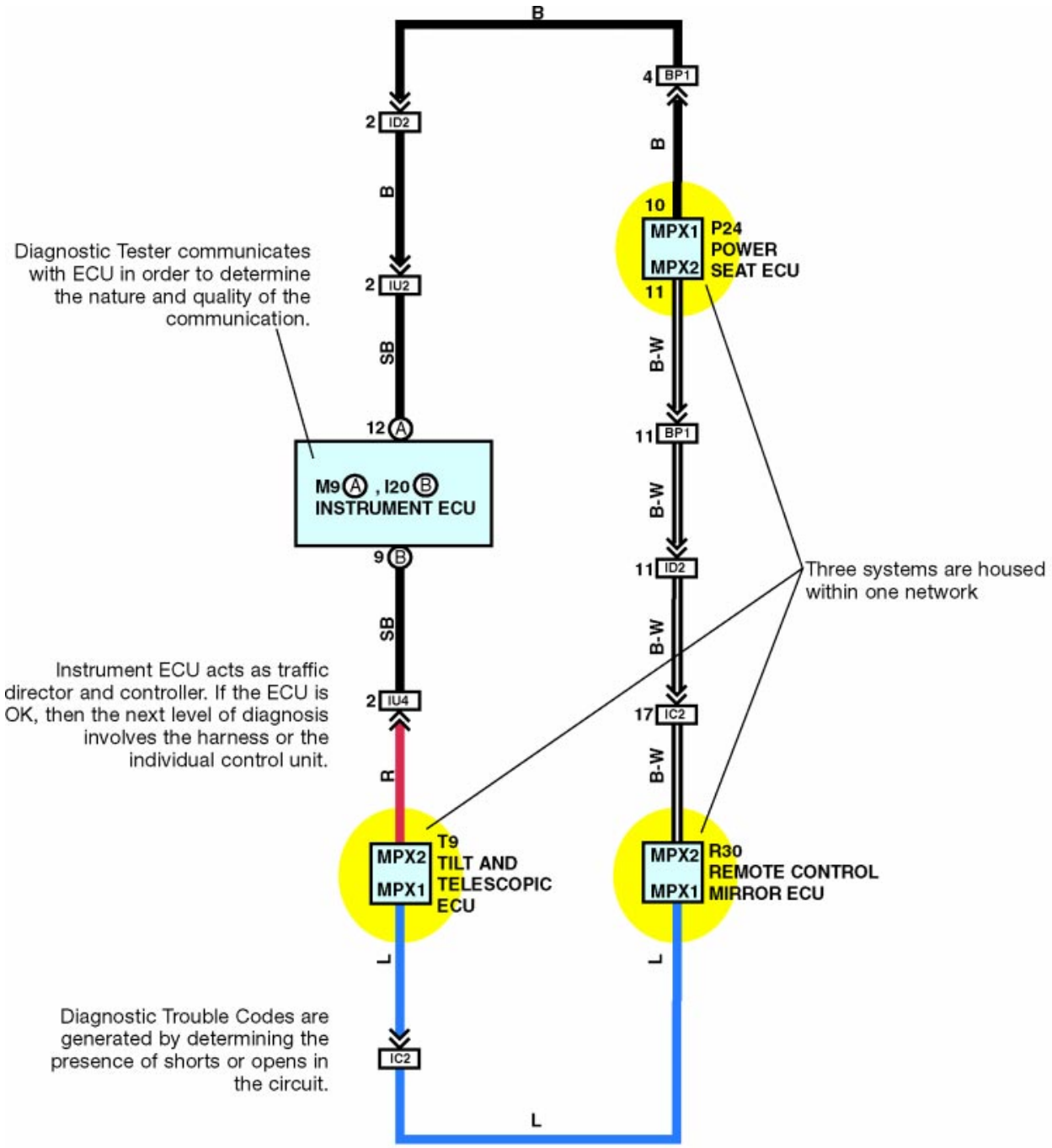

Fig. 6-5
L652f605

Using the Diagnostic Tester

Although the theory of multiplexing is important to diagnostics, it is just as important to understand the use of the hardware and software designed to assist in the diagnosis of the various systems. The most critical tool you have for evaluating the newest Lexus vehicles and the on-board multiplexing system is the Diagnostic Tester. You are already familiar with the basic operation of this tool. Our next level of diagnostics includes the “Active Test” mode which allows us to judge the operation or non-operation of certain components. It is through these procedures that we are able to make judgements about the system in question and begin to move toward a diagnosis which will ultimately repair the car.

Diagnostic Tester and Cables

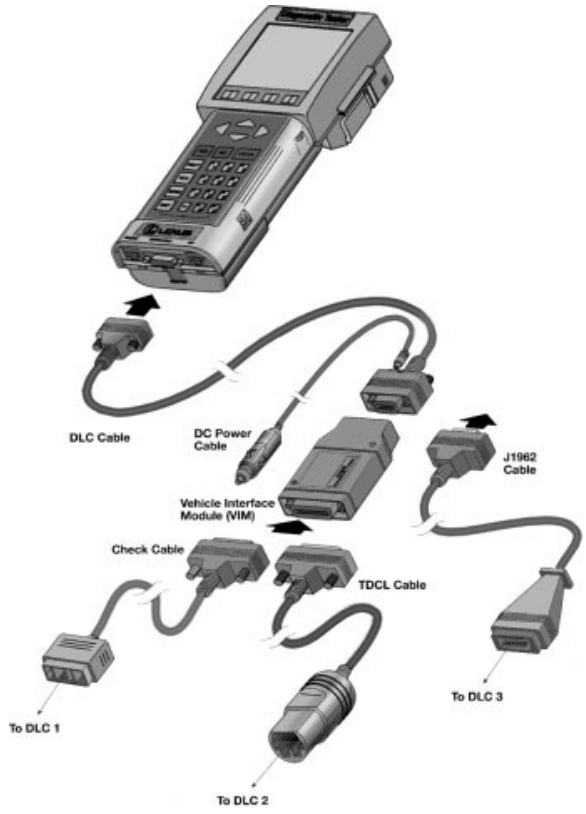

Fig. 6-6
L652f606

The Complaint

The first step in diagnosing the complaint involves verifying that the system is exhibiting the stated complaint. It is important that you are able to duplicate the same condition that the customer experiences when they operate the system.

DTCs

Remember that all of the systems in a multiplexing circuit are in one way or another connected to the central control unit. This central control unit (Body ECU) may be called by different names but it is essentially the “brains” of the operation. Every other control unit is involved in one of three basic things: they are receiving orders, executing orders, or delivering status reports. When any of these three things fails to occur there is a likelihood that a DTC will be set. You have already seen what is required to set a DTC (two opens, +B Short, Ground short) which shows that a particular ECU has been isolated from the main control unit. Its pathway of communication or power has been broken; it is now isolated. The bottom line is that we are back to basics. A connector is loose, a wiring harness has been cut, or a component has an internal failure. Let’s go through a step by step look at what we might expect to see when we are faced with a diagnostic problem.

System Check

First, we need to make certain that we have communication with the central processing unit. There will be a procedure in the Repair Manual for checking this operation and currently that procedure involves turning on the windshield wipers in the INT mode. If the wipers function normally then we have communication with the control unit. This procedure can change from year to year and model to model. Second, we need to open a door to see if the “Door Open” indicator light turns on.

If the light turns on, then we have confirmed that trouble codes can be output to our Diagnostic Tester.

System Check

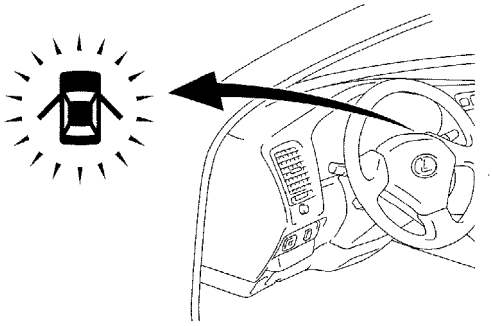

Fig. 6-7
L652f607

Accessing the Multiplex System

The next step is to hook up the scan tool and go to the OBD/MOBD selection menu. You will notice that there are several areas which you can test and there are more selections visible beyond the first screen.

OBD/MOBD Menu

Screen 1

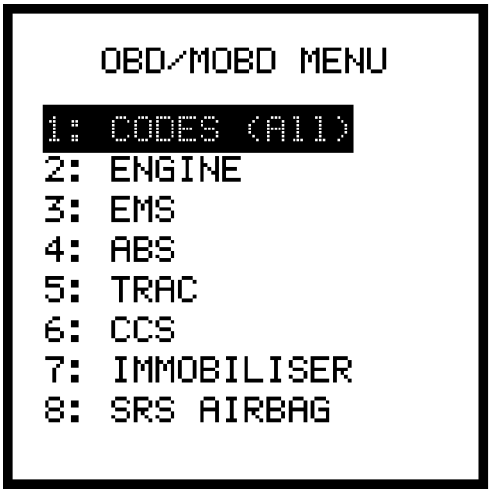

Fig. 6-8
L652f608

Single System Check

You will need to scroll down to the system description and the item you wish to check. For this example let's look at Tilt and Telescopic.

OBD/MOBD Menu

Screen 2

Fig. 6-9
L652f609

Gathering Evidence

From this menu we are taken to the actual values which are found within the Tilt and Telescopic system. Notice that the Tilt Position is 4136 and the Telescopic "TELSC" Position is 4270. In the example you saw earlier there was a difference between the Actual" and the "Position Limit". Knowing that this difference existed gives a clue that there is a problem in the control unit or the mechanism itself. It is extremely unlikely that it is a harness or connector problem.

Tilt & Telescopic Data

Fig. 6-10
L652f610

Choosing the Right Items for the List

By using these kinds of tests we begin to gather data about the condition we are trying to diagnose. On the one hand, we are looking at the codes which may or may not be set in a system; on the other hand, we are looking at values which may or may not be correct in a given group of output values. The values below were selected from the data list available. There would be no point in looking at everything. Select only what is necessary.

Freeze Frame Data

Telescopic Position should not be greater than Short Limit Position

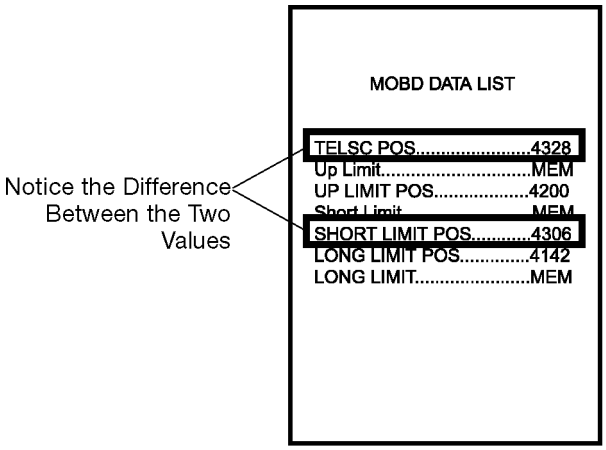

Fig. 6-11
L652f611

Thinking It Through

Remember this example? The position of the telescopic wheel is beyond the “Short Limit Position”. Therefore, it is out of specifications. The difficult part of this diagnosis is making the comparison between these things and determining what each value stands for from available information. If we follow a logical pathway in the diagnosis of this condition we might conclude that there is something internal to the telescopic motor which is causing it to travel too far. This additional

travel may give rise to a host of other problems within the system. It may lead to an inability to set a memory position. Also, we might see that the return to rest is not where it was previously. There are many possibilities. What is a good bet is that given these values, the replacement of the Tilt and Telescopic Motor assembly may resolve the problem.

The key to this type of diagnosis is patience above all. There are a number of things going on at the same time. A close reading of the repair manual and supplemental material is critical. Finally, you must be prepared to spend time with the car and use the diagnostic scan tool carefully and deliberately. In the work we will do in the shop, we are only going to focus on becoming familiar with the Diagnostic Tester so that we can move from system to system and view the various inputs and outputs. The subject of more advanced diagnostics will be covered later in a more detailed course. For now, learn to use the Diagnostic Tester to enter into the multiplexing systems and take a look around. You will find that this new area of electronic testing may be easier than you thought.

Diagnostic Tester Help

On some screens *Help will show important parameter information. If there is some doubt about the value you see on the screen, press *Help to see whether or not there is additional information.

Finally, another reference book you should have close by is the *Diagnostic Tester Operator's Manual*. This publication lists all the functions on the scantool and has many other useful hints.

Diagnostic Tester Operator's Manual

Fig. 6-12
L652f612

Active Keys

ACTIVE KEYS	
△▽	Move the cursor (highlight) up and down.
YES	Changes the highlighted parameter to the next parameter in the list.
NO	Changes the highlighted parameter to the previous parameter in the list.
* YES	Changes to the next parameter not currently displayed.
* NO	Changes to the previous parameter not currently displayed.
F1	Go to <DATA LIST> mode.
F3	Go to <BAR GRAPH> mode.
F4	Go to <LINE GRAPH> mode.
F5	Go to <CUSTOM LIST> mode.
F6	Setup <STRIP CHART> mode.
F9	Changes between large and compressed character size.
F0	Turn cursor on and off.
# F8	Start Strip Chart.
# F9	Stop Strip Chart.
* HELP	Display parameter information.
SEND	Print data list.

Fig. 6-13
L652f613

WORKSHEET 6-1 (Option of Instructor)
Multiplexing Power Seats

Vehicle	Year/Prod. Date	Engine	Transmission

Problem Description: **POWER SEATS INOP**

❑ **Problem Found** (check one): ❑ **Intermittent** ❑ **Continuous**

❑ **No Problem Found**—Operation is normal.

Explanation: _____

Step 2: Determine the Related Symptoms

1. Using the EWD, read the System Outline to see how the circuit is supposed to operate (if available).

2. Determine if it affects **ALL** or **PART** of the circuit.

   - **If all of the circuit is affected** check the operation of circuits which have common fuse/power sources and also circuits which use common grounding points.
   - **If only part(s) of the circuit** is affected, determine exactly which parts are OK and which are inoperative.

Circuit	OK or Bad	Observations

Step 3: Analyze the Symptoms

1. Based upon the original complaint, and your related symptoms checks, specifically identify the problem:

2. *On the following System Circuit Diagram:* Based upon your related symptom checks, use a highlighter to **trace current flow in the parts of the circuit that are OK.**

   _____

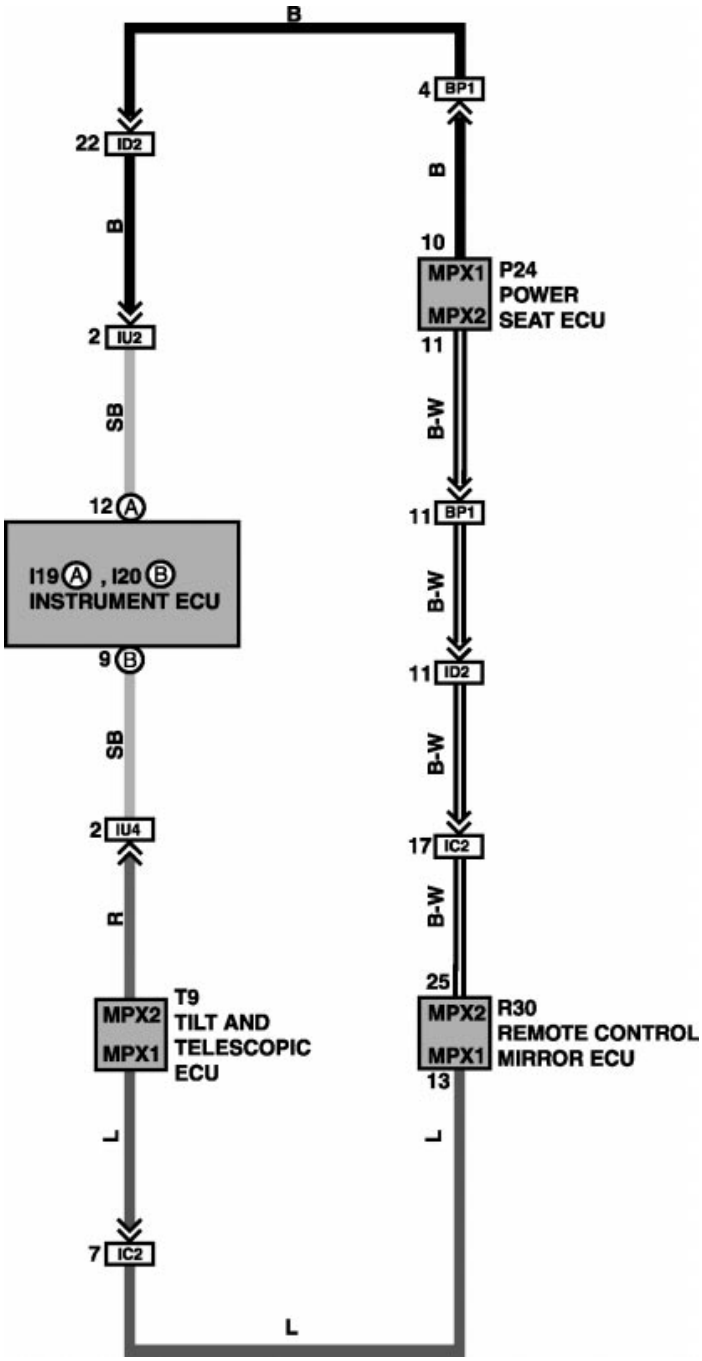
B
4 BP1
22 ID2
B
B
10
MPX1
MPX2
P24
POWER
SEAT ECU
2 IU2
11
SB
B-W
12 A
11 BP1
I19 A , I20 B
INSTRUMENT ECU
B-W
9 B
11 ID2
SB
B-W
2 IU4
17 IC2
R
B-W
25
MPX2
MPX1
T9
TILT AND
TELESCOPIC
ECU
MPX2
MPX1
R30
REMOTE CONTROL
MIRROR ECU
13
L
L
7 IC2
L

3. Now that we have determined which components are working and which ones are not working we need to proceed to the next step. What section should we look in first?

_____

4. Once we locate the Power Seat Control System we are asked to fill out the Customer Problem Analysis Check. Once we have done these things the RM directs us to inspect the Multiplex Communication System. On what page does this inspection begin?

_____

5. As we mentioned earlier, the Body ECU/CPU must be working properly before we can expect to have a successful diagnosis. What does the RM ask you to do in order to check the Body ECU /CPU?

_____

_____

6. Perform the DTC check using the Lexus hand held tester.

7. What code(s) did you find using the tester?

_____

8. What page are you asked to reference once you have determined the code?

_____

9. What is the first procedure you are asked to perform once you have determined the correct code?

_____

10. The test in #7 is a manual test to determine if the units motors are working and the integrity of the circuit from the manual switch to the motors.

11. List the connectors that you would disconnect to check for continuity between Instrument ECU and Power Seat ECU.

_____

12. List the three connectors in between these two units.

_____

13. What does the manual tell you to do if there is no continuity in the harness you checked?

_____

14. Why do you think the manual asks you to do this operation instead of some other alternative?

_____

Step 4: Isolate the Trouble

1. On the System Circuit Diagram, **circle the possible problem areas.**

2. List the first 2 items you will inspect. Mark the **type of inspection** (visual, voltmeter, ohmmeter, ammeter or jumper wire) and write in the **inspection item** (component, connector with pin numbers, wire color, etc.)

3. List the **specifications**, the **measured result** and **your diagnosis** in the appropriate column.

4. If the initial checks lead you to make **additional inspections**, list them in the shaded area.

Inspection Type	Inspection Item	Specification	Measured Result	OK or Bad
❑ Visual ❑ Voltmeter ❑ Ohmmeter ❑ Ammeter ❑ Jumper Wire				
❑ Visual ❑ Voltmeter ❑ Ohmmeter ❑ Ammeter ❑ Jumper Wire				
❑ Visual ❑ Voltmeter ❑ Ohmmeter ❑ Ammeter ❑ Jumper Wire				
❑ Visual ❑ Voltmeter ❑ Ohmmeter ❑ Ammeter ❑ Jumper Wire				
❑ Visual ❑ Voltmeter ❑ Ohmmeter ❑ Ammeter ❑ Jumper Wire				
❑ Visual ❑ Voltmeter ❑ Ohmmeter ❑ Ammeter ❑ Jumper Wire				
❑ Visual ❑ Voltmeter ❑ Ohmmeter ❑ Ammeter ❑ Jumper Wire				
❑ Visual ❑ Voltmeter ❑ Ohmmeter ❑ Ammeter ❑ Jumper Wire				

Step 5: Correct the Trouble

Cause of problem and location:	**Instructor OK**

Step 6: Check for Proper Operation

❑ Re-test the system/circuit to verify the repair

Multiplexing Power Seats

Name: _____ Date: _____

Review this sheet as you are doing the *Multiplexing Power Seats* worksheet. Check each category after viewing the instructor's presentation and completing the worksheet. Ask the instructor if you have questions regarding the topics provided below. Additional space is provided under topic for you to list any other concerns that you would like your instructor to address. The comments section is provided for your personal comments, information, questions, etc.

I have questions

I know I can

Topic			Comment

Notes

WORKSHEET 6-2 (Option of Instructor)
Multiplexing Power Tilt and Telescopic

Vehicle	Year/Prod. Date	Engine	Transmission

Worksheet Objectives

At the conclusion of this worksheet, you will be able to access ACTIVE TEST using the Diagnostic Tester to observe inputs to the Power Tilt and Telescopic Steering Column System and the Power Seat Control System.

Tools and Equipment

- Vehicle
- Diagnostic Tester equipped with the current software
- Appropriate Repair Manual

Section 1

1. Using the instructions in the Repair Manual hook up the Diagnostic Tester and make sure you have the correct software version for this vehicle.

2. What is year and model for this vehicle?

3. Select the “OBD/MOBD” from the Function Select menu.

4. Select NEW VEHICLE.

5. Select TILT & TELESCO.

6. Select TEST DATA.

7. Select ACTIVE TEST.

8. Select TILT.

9. What do you see on the screen after you have selected TILT? Did anything happen with the wheel? Describe.

   _____

10. What did the steering wheel and column do when you selected TILT?

    _____

11. How are the numbers or values different between the tilt positions of Up and Down?

12. How could you use these number values in diagnosis?

13. **Return to the OBD/MOBD menu and press SEAT**.

14. Select CURRENT DATA.

15. Select ACTIVE TEST.

16. Select each of the ACTIVE TEST choices one after the other.

17. Are there number values listed for the various seat positions?

    _____

18. What do you notice about the difference in number values between Full Forward Recline Pos and Full Back Recline Pos?

    _____

19. If you had a customer complaint on this vehicle and a known good car available?

    _____

20. Clear all codes and return the car to its original condition.

Multiplexing Power Tilt and Telescopic

Name: _____ Date: _____

Review this sheet as you are doing the *Multiplexing Power Tilt and Telescopic* worksheet. Check each category after viewing the instructor's presentation and completing the worksheet. Ask the instructor if you have questions regarding the topics provided below. Additional space is provided under topic for you to list any other concerns that you would like your instructor to address. The comments section is provided for your personal comments, information, questions, etc.

I have questions

I know I can

Topic			Comment

Notes

WORKSHEET 6-3 (Option of Instructor)
Diagnosing the Multiplexing System

Vehicle	Year/Prod. Date	Engine	Transmission

Worksheet Objectives

At the conclusion of this worksheet, you will be able to access Repair Manual information related to the Tilt and Telescopic Steering Column and Remote Mirror Systems, interpret multiplex communication strategy, and identify the signal path between inputs, ECUs, and actuators.

Tools and Equipment

- Appropriate Repair Manual

Section 1

1. You are going to be asked to take a look at the Tilt and Telescopic Steering Wheel in a LX 470 or similar model. What section of the Repair Manual will you need to look in to begin?

   _____

2. Which DLC test port will you be using to access the codes?

   _____

3. If there is a code for an inoperative Tilt and telescopic system what is the code going to be?

   _____

4. What page is referenced for a check of this system once you have this code?

   _____

5. What is the first Inspection Procedure outlined for the Tilt and telescopic ECU?

   _____

6. If the system does not operate normally after this inspection, what should be done?

   _____

7. On what page of the Repair Manual did you find this information?

   _____

8. What is the second point for your diagnosis in this procedure?

   _____

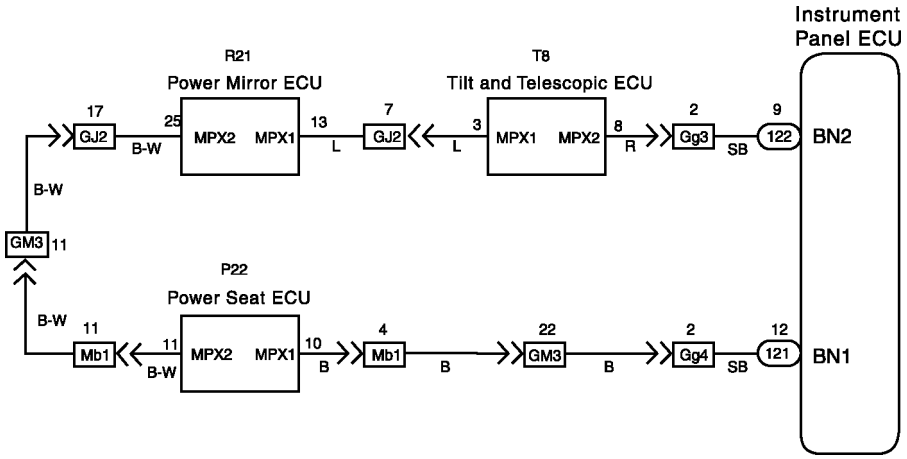

9. Which terminals need to be checked for the wiring harness continuity check described in **Inspection Procedure 2 Check A**?

_____

10. What do you notice as you check the RM and the schematic above of this circuit that might effect your continuity checks?

_____

11. What is the “Instrument Panel ECU” (Fig. 6.5) called in the manual?

_____

12. Contradictions related to terminology within the service literature and sometimes within the inspection procedures can be confusing, however try to focus on the objective of the procedure. In this example, you are checking the continuity between two or more points within the wiring harness. How many wires do you have to be concerned with in this check?

_____

13. The effectiveness of your diagnosis depends on how well you are able to interpret what really needs to be done in this situation. Your Diagnostic tester gives you a place to start. Once you have the code for the general area of the fault, you then have a direction. The easy thing about multiplexing is that you are frequently dealing with only one wire. That wire is either sending a signal or it is not. The break out for system failure looks something like this:

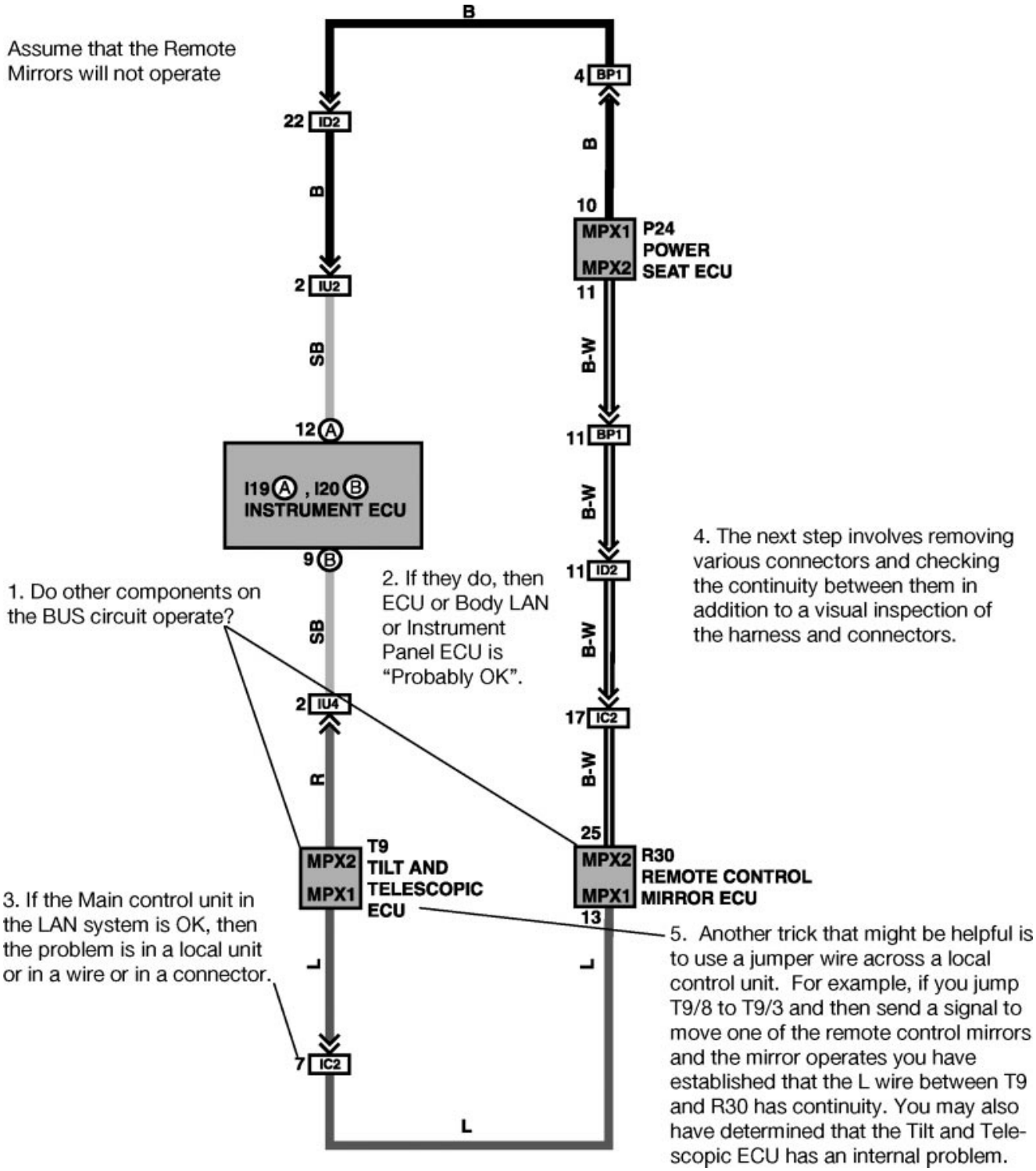

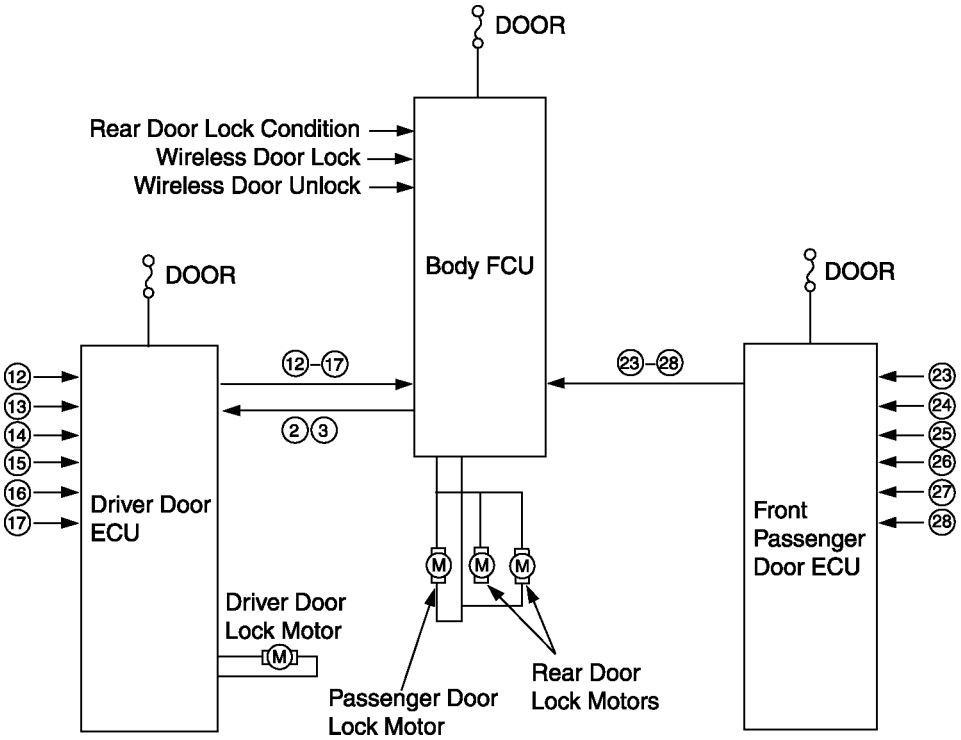

14. You can see that Multiplexing requires some degree of detective work and also the use of the Diagnostic Tester for retrieval of codes and for testing various actuators. Based on multiplexing designs we've discussed so far, take a look at the diagram above and see if you can answer some questions. The diagram comes from an NCF for the 1995 LS 400.

15. Which inputs communicate along a one way path to the Body ECU?

_____

16. Which lines communicate the signals from the Driver's Door ECU to the Body ECU?

_____

17. Which unit would communicate the condition of a locked passenger door?

_____

18. If a signal is sent from a wireless door lock to "Lock Doors" which unit receives and sends that message?

_____

19. Since the Driver's Door ECU is responsible for locking its own door, what kind of information is sent from the Body ECU?

_____

20. Which fuse is common to all on board ECUs?

_____

Diagnosing the Multiplexing System

Name: _____ Date: _____

Review this sheet as you are doing the *Diagnosing the Multiplexing System* worksheet. Check each category after viewing the instructor's presentation and completing the worksheet. Ask the instructor if you have questions regarding the topics provided below. Additional space is provided under topic for you to list any other concerns that you would like your instructor to address. The comments section is provided for your personal comments, information, questions, etc.

I have questions

I know I can

Topic			Comment

Notes

WORKSHEET 6-4 (Option of Instructor)
Multiplexing General Diagnosis

Vehicle	Year/Prod. Date	Engine	Transmission

Worksheet Objectives

At the conclusion of this worksheet, you will be able to select a multiplex system, insert a fault, and use the Diagnostic Tester to demonstrate a strategy of multiplex system diagnosis.

Tools and Equipment

- Repair Manual
- Diagnostic Tester

Section 1

1. Take a look in the Repair Manual at the multiplexing circuits available on this vehicle.

2. Determine the location of a connector that is easy to access. *Check with your instructor if you are not certain.*

3. Unplug the connector or back out a pin and check the operation of the system. What has been disabled on your system? Connector and/or pin number.

   _____

4. Hook up the Diagnostic Tester and check for codes. List any codes you find.

   _____

5. Do the codes accurately represent the component that has been disconnected? Explain.

   _____

6. If the code(s) listed were found on a customer's car, does the Repair Manual take you to the location of the problem? Explain.

   _____

7. Access the ACTIVE TEST area of the system you are working on. Select three or four of the functions that you might need to check with this particular system malfunction. List the ones you selected below.

   _____

   _____

8. Operate each of the functions that you selected using the ACTIVE TEST and make a note of the values displayed on the screen.

Item	Value/Condition

9. Are their any conclusions that you can reach based on the operation or non-operation of the system you are testing? List your observations.

_____

_____

_____

10. Can you conclude that the Body ECU is sending signals? Why?

_____

_____

11. An interruption has been placed (your bug) in the lines, which either power or communicate with your chosen system. Are there any values you found in your ACTIVE TEST, which might lead you to look in the area of this interruption? Yes or No

13. Would you be able to discover anything further if you changed the criteria of the things you were looking for with the Diagnostic Tester?

    Example: I should have checked the 'up' movement instead of the 'down'.

_____

_____

_____

12. Return the vehicle to its original condition and erase any codes that may have been set. Place the Diagnostic Tester and Repair Manual on the bench.

Multiplexing General Diagnosis

Name: _____ Date: _____

Review this sheet as you are doing the *Multiplexing General Diagnosis* worksheet. Check each category after viewing the instructor's presentation and completing the worksheet. Ask the instructor if you have questions regarding the topics provided below. Additional space is provided under topic for you to list any other concerns that you would like your instructor to address. The comments section is provided for your personal comments, information, questions, etc.

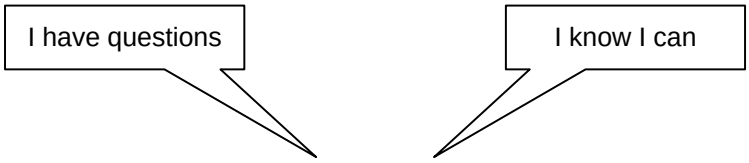

Topic			Comment

Notes

Appendix A

Glossary of Terms

A

A - Abbreviation for **ampere**, the unit of measurement of current.

Alternating Current (**AC**) - An electric current whose polarity is constantly cycling between positive and negative (Reverse direction or flow at regular intervals).

Alternator - A type of generator used in automobiles to produce electric current. The AC (Alternating Current) output is internally rectified (changed to DC - Direct Current) through the use of diodes.

Ammeter - An electrical meter used to measure the amount of current flowing in a circuit it reads amperes of current flow. The ammeter must be connected in series with the circuit (positive toward the voltage source, black lead toward ground side of the circuit.

Amperage - The amount of current (amperes) flowing in a circuit.

Ampere - The unit of measure for the flow of electrons or current in a circuit. The amount of current produced by one volt acting against one ohm of resistance.

Analog - Method of transmitting information through an electrical circuit by regulating or changing the current or voltage. Also used to describe older multimeters which use a “needle”.

Anode - Positive terminal or electrode through which current flows in a semiconductor.

B

Base - The center layer of semiconductor material in a transistor. The base circuit of a transistor turns the transistor OFF and ON. The amount of current flow through the base directly affects the amount of current flow through the emitter-collector circuit.

Biasing - Applying voltage to a junction of semiconductor materials.

Breakdown Voltage - Voltage applied to a diode or transistor in the reverse direction from that in which it passes current. The voltage is large enough to cause a massive failure of the diode to hold back current. The term breakdown voltage is also applied to zener diode operation; when it allows a reverse current flow through the diode.

Buss Bar - A solid metal strip, or bar, used as a conductor in a fuse panel.

C

Cable - Conductor made from a number of wires twisted together.

Capacitance - The ability of two conducting surfaces separated by an insulator, to store an electric charge.

Capacitor - Electrical component used to store and release a current through a secondary circuit. Can be used to protect a circuit against surges in current, store and release a high voltage, or smooth out current fluctuations. Also called a condenser.

Cathode - The negative terminal of a semiconductor toward which the current flows.

Charging System - Components used to restore electrical potential in battery and supply current needed to meet the electrical demands of the vehicle.

Circuit - A combination of elements physically connected to provide an unbroken flow of electrical energy from a power source through a conductor to a working device, and through a return conductor back to the power source.

Circuit Breaker - Device used to open an electric circuit when overheated to prevent circuit damage due to excess current flow.

Circuit Diagram - Drawing showing the wires connections and components (loads) in an electric circuit. On Lexus vehicles, this commonly referred to as an EWD (electrical wiring diagram).

Closed Circuit - A circuit which is uninterrupted from the positive and negative terminals of the voltage source.

Collector - The area of a transistor which collects emitted electrons and then passes them on through a conductor completing a circuit.

Color Coding - The use of colored insulation on wire to identify an electrical circuit.

Computer Control - Control of any automotive system using solid state devices and operating with a preprogrammed set of commands (program), sensors to monitor various engine conditions (input), and signals set to affect the function of some component (output). Also holds commands in memory for later use.

Condenser - Electrical component used to store and release voltage. Can be used to protect a circuit against surges in current, store and release a high voltage or smooth out current fluctuations. Also called a capacitor.

Conductor - Any material that allows electric current or heat to flow. Current flows easily through a conductor because there are many free electrons in that material's atomic structure.

Continuity - An electrical connection between any two points in a circuit. When used in a repair manual inspection procedure, continuity usually describes a "low resistance" value.

Conventional Theory - The current flow theory which says electricity flows from positive to negative. Also called positive current flow theory.

Counterelectromotive Force - An induced voltage that opposes the source voltage and any change (increase or decrease) in the current flow. Abbreviated as CEMF.

Current - Flow of electrons through a circuit, measured in amperes.

Cycle - Any series of events repeating continuously. In AC electrical systems, the flow of current alternates first in one direction and then in the opposite direction.

D

Dielectric - The insulating material between the two conductive plates of a capacitor.

Digital - Method of sending information through an electrical circuit by switching the voltage/current ON or OFF.

Diode - A semiconductor device made of P-material and N-material bonded at a junction. It permits current to flow in one direction only and is used in rectification (changing alternating current to direct current).

Direct Current (DC) - A steady flow of current moving continuously in one direction in a conductor from a point of high potential to a point of lower potential.

E

Effective Resistance - All electrical and inductive losses of a circuit.

Electrical Charge - Property of electrons and protons that give a substance its electrical characteristics. A deficiency of electrons in the outer ring of atoms of a substance will give it a positive charge. An excess will give the substance a negative charge.

Electrical Symbols - Simple drawings used to represent different parts of an electrical circuit.

Electricity - The controlled movement of electrons in a conductor.

Electrochemical Device - A device that operates on both electrical and chemical principles (a lead acid storage battery, for example).

Electrolyte - A solution of sulfuric acid and water used in a storage battery that, through chemical reaction with the dissimilar metal plates, produces electric potential.

Electromagnetic Field - The invisible field of force which surrounds a charged conductor or coil.

Electromagnetic Induction - The creation of a voltage within a conductor when relative motion exists between the conductor and a magnetic field.

Electron Flow Theory - Belief that current flow consists of electrons flowing from a point with a high potential of free electrons (negative) to a point with fewer electrons (positive).

Electronic - Any system using integrated circuits or semiconductors to control the flow of current.

Emitter - Region in a transistor that emits (NPN) or collects (PNP) a large number of electrons as a small number of electrons are taken from or added to the base.

Equivalent Resistance - The total resistance of a parallel circuit. The single mathematical equivalent of all parallel resistances.

F

Farad - The unit of measurement of capacitance.

Feedback System - Electronic system in which sensors monitor the output of various automotive systems and provides input to control the operation of the system and change the output. It is a self-correcting system.

Filament - A resistance in an electric light bulb which heats up and glows producing light when an adequate current (bombardment by electrons) is sent through it.

Flux - The lines of magnetic force flowing in a magnetic field.

Forward Bias - The application of a voltage to produce current flow across the junction of a semiconductor.

Frequency - Number of times every second an alternating current goes through a complete cycle. Measured in the unit Hertz (Hz).

Full-Wave Rectification - A process by which all of an AC voltage wave is rectified and allowed to flow as DC.

Fuse - A device containing a soft piece of metal which melts and opens the circuit when current flow exceeds a specified amount.

Fusible Link - Performs a similar function as a fuse, but for higher amperage applications. Can be a special wire soldered into a circuit, or located in a plastic housing.

G

Ground - The return path for current flow in a circuit. In automotive use, the circuit ground path is usually the vehicle frame and metal body parts.

Ground Cable - The battery cable that provides a ground connection from the vehicle chassis to the battery.

Grounded Circuit (Unintentional) - A type of circuit malfunction in which the current in the circuit is accidentally shunted, or diverted to ground. Also called a short-to-ground. Usually, this condition bypasses a load. When a load is bypassed, it reduces the resistance of the circuit and can cause wiring to overheat, fuses to blow, etc.

Ground Terminal - The terminal of the battery connected to the metal frame and chassis of the vehicle for the return path of current flow back to the battery, usually to the negative terminal.

H

High Resistance - A type of circuit malfunction in which a loose, dirty, or corroded connection limits current flow below specifications. The result can be dim lamps, or intermittent or inoperative devices.

I

Induced Voltage - The voltage which appears in a conductor when relative motion exists between it and magnetic flux lines.

Induction - Producing a voltage in one conductor or coil by moving the conductor or coil through a magnetic field or by moving the magnetic field past the conductor or coil.

Infinite Resistance - A reading (∞) on an ohmmeter that indicates an open circuit, broken wire, defective component. On digital meters, infinite resistance is represented by “OL” on the display. With this much resistance, no current can move through. Usually, this indicates that the circuit is broken with no complete path for current flow.

Input - Generally used to refer to data or sensor information given which is received by an ECU. The ECU uses this information to determine what operations to perform.

Insulators - Materials that will not conduct electricity because of too many bound electrons in its atomic structure.

Integrated Circuit - An electronic circuit containing many transistors, diodes, resistors, and capacitors that is manufactured on a single semiconductor chip.

J

Jumper Wire - A test device or tool used by technicians to create a temporary bypass for current in a circuit. A jumper wire may be used to ground a circuit, to bridge a broken wire or switch or to complete a circuit for test purposes.

K

k - Prefix used in the metric system of measurement to mean 1000 times the stated value. Abbreviation for kilo. In automotive applications, it is used for ignition system voltages (kV) and for large amounts of resistance (kΩ)

Kilowatt - Unit of power in the metric system. One kilowatt is equal to about 1.341 horsepower. Also used to describe 1000 watts of electrical power.

L

Light Emitting Diode (LED) - A semiconductor diode designed so light is emitted when forward current is applied to the diode.

Lines of Force - Imaginary lines representing the direction of magnetism around a conductor or from the end of a magnet.

Liquid Crystal Display (LCD) - Uses a polarized light principle and a liquid crystal to display numbers and characters.

Logic Gates - These devices are designed to control current flow in electronic modules of various types. Here are some basic gate types:

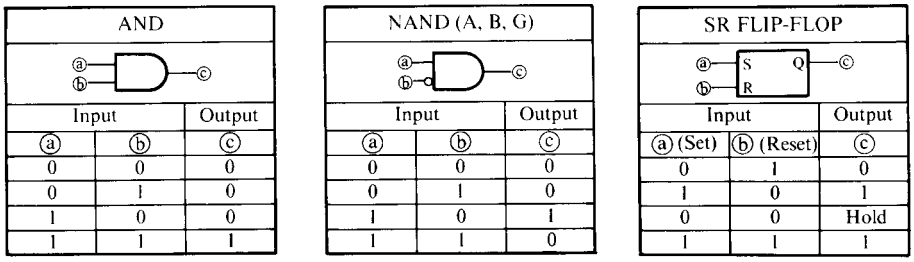

AND Input a	AND Input b	AND Output c
0	0	0
0	1	0
1	0	0
1	1	1

NAND Input a	NAND Input b	NAND Output c
0	0	0
0	1	0
1	0	1
1	1	0

SR FLIP-FLOP Input a (Set)	Input b (Reset)	Output c
0	1	0
1	0	1
0	0	Hold
1	1	1

Consult the 1990 LS 400 New Car Features for more information

M

Magnet - Any material with the property of attracting iron and steel.

Magnetic Flux - The invisible directional lines of force which make up a magnetic field.

Magnetic Induction - Producing magnetism in a magnetic body by bringing it near a magnetic field.

Magnetic Pole - Point where the lines of force enter and leave a magnet.

Magnetism - A form of energy caused by the alignment of atoms within certain materials The ability of a metal to attract iron.

Mega - Metric prefix for “one million.” DMMs display large amounts of resistance in MW.

Memory - Part of a microprocessor or microcomputer in which instructions or data are stored as electrical impulses.

Micro - Prefix of measurement meaning one millionth of a part.

Microprocessor - Set of integrated circuits that can be programmed with stored instructions to perform given functions. These small computers containing a central processing unit (CPU), instructions stored in a read only memory (ROM), and a random access memory (RAM) for receiving data and instructions. On Lexus vehicles, they are also called ECUs or ECMs.

Milli - Prefix of measurement meaning one thousandth of a part.

Millisecond - Unit of measurement for time, meaning one thousandth of a second.

Motor - An electromagnetic device used to convert electrical energy into mechanical energy.

Mutual Induction - Creation of voltage in one conductor by the rise and collapse of the magnetic field surrounding another conductor. Magnitude or strength of induced voltage depends on the ratio of turns between one coil and the other and the strength of current causing the induced voltage.

N

Nanosecond - One billionth of a second. A unit of measurement usually referring to the speed the circuit in a microcomputer can work. Electricity traveling at the speed of light will travel about 11.8 inches in one nanosecond. In comparison the same electricity will travel about 930 feet in one microsecond (millionth of a second).

Negative Temperature Coefficient - The property of any substance in which the electrical resistance increases as the temperature of the substance decreases. Most “temperature sensors” used on the vehicle (such as THW and THA) are negative temperature coefficient resistors.

Negative Terminal - The battery terminal closest to the negative potential in the battery.

N-Material - A semiconductor material that has excess free electrons because of the type of impurity added. It has a negative charge and will repel additional electrons.

North Pole - The area of a magnet from which the lines of force are said to leave the magnet. The end of a magnet that will point toward the north if freely suspended.

NPN Transistor - Transistor with two layers of N-type material separated by a layer of P-type material. Base circuit must be positive relative to the emitter for current to flow through the collector circuit.

N-Type Material - Semiconductor material with an excess of free electrons because of some impurity added. It has a negative charge and will repel additional electrons.

O

Ohm - The standard unit for measuring the resistance to current flow. One ohm of resistance will limit current flow to one ampere when one volt of pressure is applied. Represented by the symbol “Ω”.

Ohm's Law - The mathematical relationship between voltage, current, and resistance. The pressure of one volt applied to one ohm of resistance will cause one ampere of current to flow. Amps equal volts divided by ohms (I = E/R). Volts equal amps times ohms (E=I X R) Ohms equal volts divided by amps (R=E/I).

Ohmmeter - An electrical meter used to measure the resistance to current flow in a circuit or working load in ohms. The ohmmeter can only be connected across a circuit or device with the power removed. This meter has its own battery and can be damaged if connected to a circuit that has power applied to it.

Open Circuit - When there is an incomplete path for current flow. The open circuit may be caused deliberately by a switch that is OFF or it may be caused by a break in the conductor. An open circuit can occur on either side of the load.

Open Circuit Voltage - A voltage measurement taken when there is no current flow through the circuit. This measurement indicates continuity to the voltage source, but cannot detect if there is any unwanted resistance in the circuit.

Overload - Carrying a greater load than the device, machine, or electric circuit was designed to carry.

P

Parallel Circuit - A circuit in which there are multiple loads each having a separate current path.

Parasitic Load - An electrical load which is unswitched and ON all the time. Typically, the parasitic load from ECUs and other electronic devices on the vehicle is around 20 to 30 mA. Some vehicles may go as high as 50mA or more.

Peak Inverse Voltage - Highest reverse bias voltage that can be applied to a junction of a diode before the semiconductor material breaks down and allows current to flow in that opposite direction.

Photoelectricity - Voltage caused by the energy of light as it strikes certain materials.

Piezoelectricity - Voltage caused by physical pressure applied to the faces of certain crystals.

PN Junction - Dividing line in a semiconductor between P-type material and N-type material. Electrons can flow from N to P but not from P to N.

PNP Transistor - Transistor with two layers of P-type material separated by a layer of N-type material. Base circuit must be negative relative to the emitter for current to flow through the collector circuit.

Polarity - The quality or condition in a body that has opposite properties or directions. A collective term applied to the positive(+) and negative (-) ends of a magnet or electrical component such as a battery or coil.

Positive Temperature Coefficient (PTC) - Resistor or heating element in which the resistance increases with temperature or heat created by current flowing through it. Eventually the resistance will get so high that it will oppose all current flow. Then, the resistor or heating element will cool down until current can begin to flow again, increasing the temperature.

Positive Terminal - The battery terminal to which electrons flow in a complete electrical circuit.

Potential - The pressure (voltage) existing between two points available to force electrons through the circuit as current.

Potentiometer - Electrical component that can vary the amount of resistance placed in a circuit by turning or sliding a contact on the resistance wire windings.

Power - Rate at which work is done. Common unit of measure for power is horsepower. Power is also measured by kilowatt (kW). About three-fourths of a kilowatt equal one horsepower.

Power Feed Circuit - Wires that carry current from the positive terminal of the battery to the electrical components of the vehicle. These circuits are sometimes referred to as the +B or Power side of the circuit.

Pull-in Winding - The coil of large diameter wire in a solenoid that creates a magnetic field to pull the solenoid plunger into the coil.

Protocol - a set of rules that governs the transmission of information between control units.

R

Random Access Memory (RAM) - Part of a microprocessor or computer into which information can be written and read.

Reactance - Property of an electrical device or conductor to impede change in current passing through it or voltage exerted on it.

Read Only Memory (ROM) - Part of a microprocessor or computer where information and instructions are permanently integrated into the circuits and can only be read by the processor. Usually used to store the program or instructions for the processing unit to act on.

Rectifier - Device used to change alternating current to direct current.

Regulator - Device in the charging system used to control alternator output to prevent excessive voltage from being fed to the battery or to the electrical components in a vehicle.

Relay - An electromagnetic switch. A relay uses a small amount of current flow to control the flow of a larger amount of current through a separate circuit.

Reluctance - The tendency of some materials to resist penetration by magnetic flux lines.

Resistance - The opposition to the free flow of an electric current which is measured in ohms.

Resistor - A device made of carbon or wire that presents a resistance to current flow. Any device in a circuit that produces work, loads the circuit, and causes a voltage drop acts as a resistor.

Reverse Bias - Polarity of voltage applied to the junctions of a diode or transistor so that no current will flow across the junction.

Reverse Breakdown Voltage - The reverse voltage beyond which a diode cannot hold back reverse current.

Rheostat - A variable resistor for regulating a current flow.

S

Schematic Diagram - A graphic representation of a circuit. On Lexus vehicles, this is referred to as an Electrical Wiring Diagram or System Circuit Diagram.

Semiconductor - Popular name associated with almost any solid state circuit or component. Materials with four electrons in the outer ring of the atom which show the properties of a conductor or a non-conductor under different conditions.

Sending Unit - Sensor which converts a mechanical condition (oil pressure or coolant temperature) into an electrical value.

Series Circuit - A circuit in which the loads are connected end to end with a positive pole to a negative pole, so that only one path is available for all current flow.

Series Motor - A motor that has only one path for current flow through the field and armature windings. These motors are commonly used for starter motors.

Series-Parallel Circuit - The connection of several loads in a circuit in such a way that current must flow through some loads but can't flow to one or more other loads without affecting the rest of the circuit. A series-parallel circuit is simply a circuit containing elements of both a series circuit and a parallel circuit.

Short Circuit - A type of circuit malfunction in which two or more wires touch each other accidentally in such a way that the circuit(s) are completed wrong. A short circuit between two different circuits interconnects the two in such a way that if either circuit is electrically energized, both will function.

Short-to-Ground - Circuit problem in which a connection is unintentionally made to ground. If the ground is before the load, a blown fuse will result. If the ground is after the load, and +B is present at the + side of the load, the load will operate.

Shunt - An electrical connection or branch in parallel with another branch circuit or connection.

Solenoid - Electromechanical device used to produce mechanical movement by drawing a plunger into a current carrying coil.

Stranded Wires - Wires or cables made of a number of smaller wires twisted or braided together.

Switch - A device used to control the current flow (off or on) in a circuit.

System Circuit Diagram - Term used to describe the schematic or wiring diagram in the Lexus EWD.

T

Terminal - Metal device attached to the end of a wire or load which makes the connection to the conductor.

Transducer - A device which changes one form of energy into another. In electrical systems, we look at “sensor” as transducers, converting a mechanical energy into electrical energy.

Transformer - Device used to change AC current into a different voltage. Consists of two or more coils, one with more windings than the other, that induce voltage in one coil while current flows through the other.

Transistor - A semiconductor device with three connections. A small current at the base is used to control the current flow through the emitter collector circuit. Acts as a solid state relay, or as an amplifier.

U

Unwanted Parasitic Load - A load which continuously draws an excessive current from the battery when the key is off. Typically, a parasitic load in over 50 to 100 mA can be considered “excessive”, resulting in a dead battery after the vehicle has been parked overnight or longer.

V

V - Abbreviation for **volt**, a unit of measurement for electrical potential.

Volt - The electromotive force that causes current flow. One volt of pressure causes one ampere to flow through one ohm of resistance.

Voltage - The electromotive force that causes current flow. The potential difference between two points when one is negatively charged and one is positively charged.

Voltage Drop - Voltage measurement made by placing a voltmeter in parallel to a circuit that has current flow going through it.

Voltmeter - An electrical meter used to measure the difference in voltage between two points in a circuit.

W

W - Abbreviation for a **watt**, a unit of measurement for power.

Watt - The unit of measurement for electrical power. One way to measure the rate of doing work. Watts equals voltage drop times amperage.

Wire Gauge - Wire size numbers based upon the cross-sectional area of the conductor. The larger the wire is, the smaller the gauge number.

Wiring Harness - A bundle of wires enclosed in a plastic cover and routed to various areas of the vehicle. Most harnesses end in plug-in connectors.

Z

Zener Diode - A semiconductor made so as to allow reverse current flow without damage at a voltage above a specific value. Used frequently in voltage regulator circuits.

Notes

Overview

L005 Topic Overview

MONDAY	TUESDAY	WEDNESDAY	THURSDAY	FRIDAY
Citizenship, Philosophy, Research Techniques	Engine Control Technology	Powertrain	Suspension	Vehicle Dynamics
LEXUS PHILOSOPHY & LEXUS COVENANT	**VARIABLE VALVE TIMING - i (VVT-i)**	**ELECTRONIC THROTTLE CONTROL SYSTEM-i & ELECTRONICALLY CONTROLLED TRANSMISSIONS**	**ADAPTIVE VARIABLE SUSPENSION & ACTIVE HEIGHT CONTROL**	**VEHICLE SKID CONTROL (VSC)**
COMPANY Organization Locations History & Current Models Lexus Traditions video Market Share Information Customer Demographics Training Available ASE Certification Tahara Plant video	ASSIGNMENT 1 Multi-function wireless remote Homelink®	ASSIGNMENT 1 Power windows and door locks Power Seats	Worksheet: 4-10 AVS & AHC	Worksheet: 4-12 Vehicle Skid Control (VSC)
INTRO TO RESOURCES PDS Manual Repair Manuals E W D Owners Manuals New Car Features books Technical Assistance System TSIBs SST Catalog Technical Information System	Worksheets: 4-1 Multi-function wireless remote 4-2 Homelink®	Diagnostic Tester Screen Navigation Retrieve & Erase Codes Display & Print Codes Active Test Mode C-BEST Applications	Navigational System	ASSIGNMENT 1 Theft deterrent system
ASSIGNMENTS 1 Vehicle Systems 2 PDS Assignments	Six Step Process Troubleshooting & Logical Deduction Repair Orders Technical Field Reports	Worksheets: 4-4 (Part 1) Diagnostic Tester Diagnostic Trouble Codes 4-5 (Part 2) Diagnostic Tester Active Test & Data List 4-6 (Part 3) Diagnostic Tester Electronically Modulated Air Suspension (EMAS) 4-7 (Part 4) Diagnostic Tester Customized Body Electronic System (C-BEST)	Worksheet: 4-11 Navigational System	Perform Full PDS w/ Instructor-Installed incidents
	Battery Analyzer		ASSIGNMENT 1 Audio System A/C System	Remove all incidents
	Worksheet: 4-3 Battery Analyzer	Worksheet: 4-8 Electronic Throttle Control System-Intelligence (ETCS-i)	NVH	ASSIGNMENT 1 Airbags & Seat Restraints
	Assignment 2 PDS (Part 1) Exterior, Under Vehicle, & Under Hood	Immobilizer	Assignment 2 PDS (Part 2) Interior PDS & Road-test	
		Worksheet: 4-9 Engine Immobilizer		

L005 INSTRUCTIONAL OBJECTIVES

1. To acquaint the technician with the Lexus philosophy and expectations of customer care.
2. To orient the technician to the company and the Lexus Division/organization.
3. To familiarize the technician with training expectations and opportunities available as a Lexus associate.
4. To introduce the Pre-Delivery Service and familiarize the technician with the technical resources available to effectively perform his job within the Lexus organization.
5. To provide the technician the opportunity at relevant practice and skill verification using technical resource service materials available in the dealership to research and develop a presentation on an assigned vehicle system/feature and deliver the information to his/her colleagues.
6. To provide for development and relevant practice of the communication skills necessary to effectively impart information within the dealership (to his/her colleagues, Service Manager, Technical Assistance Hotline, and to interact effectively with the Lexus customer).
7. To introduce the technician to new technology.
8. To introduce the concept of using the “Six Step Diagnostic Process” and a troubleshooting tree to investigate and verify an incident, report results of the investigation on a repair order, and initiate a Technical Field Product Report (if necessary).
9. To provide relevant practice of and skill verification of reporting and investigative skills.
10. To introduce the battery tester.
11. To familiarize the technician with the PDS manual and procedures, provide an opportunity to conduct a Pre Delivery Service and to introduce the concept that certain types of incidents might logically occur during transport and be identified during PDS.
12. To introduce the Lexus Diagnostic Tester (basic keystroke and menu navigation, retrieving and displaying codes, easing codes, utilizing the printer, introducing Active Test and DATA LIST Modes, and using C-BEST software applications to provide electronic system customization for the Lexus customer).
13. To provide relevant practice and skill verification using the Lexus Diagnostic Tester, retrieving and displaying codes, easing codes, accessing Active Test and DATA LIST Modes, connecting and using the printer to print data lists and graphic displays, and using C-BEST applications.

14. To provide the technician the opportunity to demonstrate the skills required using the Lexus Diagnostic Tester to initialize and register keys to the Immobilizer Theft Deterrent System.

15. To provide the technician with the opportunity to demonstrate the skills required to use the necessary resource materials and perform an effective vehicle PDS, identify an incident, and determine a logical methodology to verify and then report the incident.

16. To introduce the Navigational System.

17. To provide relevant practice and skill verification using the Navigational System.

18. To provide the technician with the opportunity to demonstrate the skills required using the necessary resource materials and performing an effective vehicle road test. Practice identifying and reporting various NVH concerns during a PDS will be featured as well.

19. To introduce the Homelink® System.

20. To provide the opportunity at relevant practice and skill verification programming the Homelink® Transmitter.

21. To provide the technician with the opportunity to demonstrate the skills required to perform an effective Pre-Delivery Service, identify incidents when present, research the necessary resource materials to investigate, report the incident on an R. O. and initiate a Technical Field Product Report (if necessary).

22. To introduce and provide for relevant practice using TIS and printing data from TIS.

L005 TECHNICIAN OBJECTIVES

The technicians who complete this course will be able to:

1. Identify the Lexus Customer satisfaction philosophy.

2. Ascertain the Lexus market position as compared to other automotive manufacturers.

3. Develop an awareness of the training and ASE Certification expectations and opportunities within the Lexus organization.

4. Access, research and utilize the following resource information when performing a Pre-Delivery Service:

PDS Manual
Repair Manual
Electrical Wiring Diagrams
Owners Manual
New Car Features books
TSIBs
SST Catalog
Technical Assistance System

Technical Information System:

- Technical Service Information Bulletins
- Repair Manuals & EWDs
- Electronic Parts Catalog
- Other resource information available on-line

5. Develop the communication skills necessary to effectively impart information within the dealership to his/her colleagues, Service Manager, Technical Assistance Hotline, and to interact effectively with the Lexus customer.

6. Develop a familiarization with the latest advancements in Lexus products and technology.

7. Utilize the “Six Step Diagnostic Process” to investigate and verify an incident during a Pre-Delivery Service.

8. Develop/adopt a “diagnostic troubleshooting tree” when investigating and/or verifying an incident during PDS.

9. Properly report investigation results on a Repair Order.

10. Initiate a Technical Field Product Report.

11. Utilize the Lexus Battery Analyzer.

12. Use the Lexus Diagnostic Tester:

- navigate through menus
- retrieve MIL codes
- erase MIL codes
- connect and use the printer to print data lists and graphic displays
- access Active Test Mode
- access DATA LIST
- modify body electronic system operations using the Customizable Body Electronic System (C-BEST).

13. Initialize and register keys to the Immobilizer System (with and without Scan Tool).

14. Utilize the Lexus Navigational System effectively.

15. Identify NVH concerns during a Road Test.

16. Program the Homelink® System.

17. Perform an effective full Pre-Delivery Service using the PDS manual.

- Discriminate between problems and normal conditions in all areas of Pre-Delivery Service.
- Perform basic troubleshooting on all systems during a PDS.
- Complete a New Vehicle Delivery Check Sheet.

Section 1

THE LEXUS DIVISION

"The Relentless Pursuit of Perfection"

Introduction- The Lexus Covenant

The philosophy grows out of the Japanese word, *"kaizen,"* meaning continuous improvement. The Lexus philosophy is to constantly analyze what we are doing and continually seek ways to improve upon it.

The Lexus Division and its dealers are proud to have attained a unique and distinctive position within the automobile industry. Lexus manufactures products of the highest possible quality; quiet, luxurious and powerful vehicles. Safe and reliable with an ownership experience exceeding all customer expectations, Lexus stands out from the competition.

Brief History

In 1984, Toyota began work on a luxury vehicle - the project was known as F1 (Flagship 1). Extensive market research to learn about the American Luxury-car market was launched. The mission was to identify and define the needs and requirements of potential customers in this market and to develop a vehicle that could not only meet, but exceed their expectations of what a luxury vehicle should be.

To do this, distinctive design, engineering excellence, and an unprecedented level of customer service would emerge as the key to the success of Lexus in America.

The mission was also to develop the finest dealer network in the industry; to establish a reputation for integrity, prestige, trust, and reliability which would have a real impact on our customers and address the issues of long-term customer retention and brand loyalty.

1600 dealer applicants were screened to determine if they met the criteria required of a Lexus dealership. They had to have a track record of the ability to satisfy their customers, and to understand the level of personalized service required by Lexus. Of the

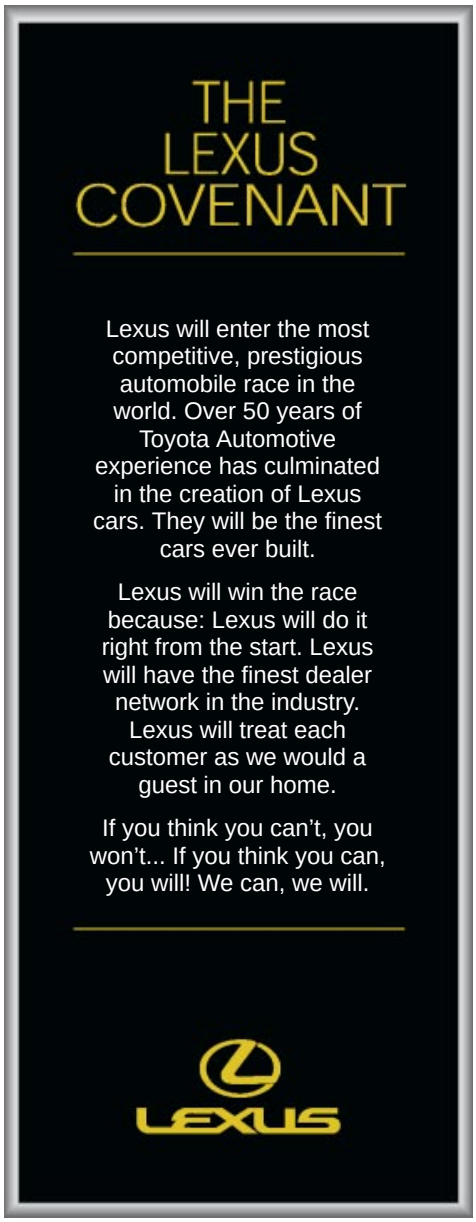

over 1600 initial dealer applicants for a Lexus franchise, only 6% met the criteria. These 90 dealers were the founders of the Lexus Dealership Network of today.

Over 1,400 engineers and 2,300 technicians participated in the development of the first Lexus. The design team wanted a luxury sedan with exceptional aerodynamic characteristics and styling, yet traditional elegance. In 1989, after years of research and development, 450 prototype vehicles, and over a million miles of testing, Lexus produced their first world-class luxury sedan, the LS 400.

Produced at the Tahara assembly plant in Japan, it featured a V8, 4.0-liter, 32-valve DOHC engine, an Electronically Controlled Transmission with intelligence (ECT-i), 4-wheel ventilated disc brakes, vehicle-speed-sensing progressive power steering, an Anti-Lock Braking System (ABS), and an available Traction Control System (TRAC). An optional air suspension system was also available on this model.

The first LS 400 targeted a market segment of mature, confident, sophisticated and conservative buyers with highly discerning tastes who had the desire to own, and the expendable capital to afford, the best automobile on the market.

The luxury-car market was taken by surprise. Lexus sold over 63,000 units the first full year. That year, the LS 400 was named “Best of What’s New: Best Car” by *Popular Science Magazine*.

Today Lexus has over 189 dealership locations nationally. We have positioned our product as a leader in the U. S. luxury car market.

Dealer Locations

Fig. 1-2

The Lexus Model Line and Customer Demographics

Over the years Lexus has developed and added many exciting new products to its model line. These new models were developed in response to varied customer demands for performance, styling, prestige, comfort, safety, ruggedness, versatility, economy, and functionality.

LS 400

Since the first LS 400 was introduced to the market. The LS 400 has amassed a considerable number of top auto industry awards including the prestigious J. D. Power & Associates:

"Top 10 Models in Initial Quality" in 1990, 1991, 1992, and 1993.

In 1994, "Best Overall Model in Vehicle Performance in Three Years of Ownership," "Most Appealing Premium Luxury Car," as well as "Top 10 Models in Initial Quality. "

In 1995, "Best Model in Vehicle Dependability Study at Five Years of Ownership" and "Most Appealing Premium Luxury Car."

"Best Premium Luxury Car in Initial Quality" in 1997 and 1998.

The LEXUS LS 400

Fig. 1-3

LS 400-Current Model

The current LS 400 has a five-speed automatic Electronically Controlled Transmission with intelligence (ECT-i); featuring overdrive fifth gear, an auto-select shift program, engine/transmission networking, and a flex-lockup torque converter.

A Transitional Low-Emission Vehicle (T-LEV), the engine is a 4.0-liter V8 with aluminum block and heads. Four valves per cylinder, four cams, and continuously Variable Valve Timing with intelligence (VVT-i) which provides optimized valve timing, making adjustments over the entire rpm range. The engine produces 290 horsepower at 6,000 rpm and 300 lb-ft torque at 4,000 rpm.

The four-sensor, Anti-lock Braking System (ABS) includes four-wheel vented, power-assisted disc brakes, with four-piston calipers. Integrated with the Anti-lock Brake System (ABS) and Traction Control (TRAC) is a computerized Vehicle Skid Control (VSC) that controls, monitors and helps correct for side-slip of the tires to provide vehicle stability.

The LS 400 has double-wishbone four-wheel independent suspension, with coil springs. It has gas-pressure shock absorbers, rear strut rods, front and rear stabilizer bars and rebound springs in the front shocks.

The LS 400 has vehicle-speed-sensing progressive power-assisted rack-and-pinion steering.

Safety features include:

- Daytime running lights
- Front and side airbags
- Three-point front and rear seat belts with height-adjustable anchors, pre-tensioners and force limiters
- Electrochromic rear view mirrors, with outside defoggers, and auto-tilt-down feature in reverse
- Vehicle theft deterrent and an engine immobilizer system with a built-in transponder in the key

Other features include:

- Multi-information display with drive computer
- Multi-function remote entry system with rolling code technology
- Remote trunk-lid and fuel-filler door release
- Three-way programmable garage door transmitter
- Power tilt and telescopic steering column
- Cruise control
- Dual-zone automatic climate control
- Lexus Memory System for driver’s seat position, outside rearview mirrors, driver’s shoulder belt anchor height, and steering wheel position

Options include:

- Electronic Air Suspension with automatic load leveling
- Navigational System
- Nakamichi Audio System
- Premium Package - 6 disc CD changer, power tilt-and-slide moonroof with jam protection, and High-Intensity Discharge (HID) headlamps

Now let's look at the demographics for the LS 400 customer.

Lexus LS 400 Customer Demographics

% **Male:** 65%
% **College Educated:** 64%
Median Price Paid: $54,000
Median Income: $199,600
Median Age: 56
% **with Children <18 in Household:** 21%
% **Married:** 92%
% **Leased:** 44%

The LEXUS GS 300/400

Fig. 1-4

GS 300/400

Introduced first in model year 1993, the GS 300 originated as a concept car designed at Gioretto Giugiaro's studio "Ital Design". It was developed as a high-performance, high-quality personal sedan. It featured an in-line 6cylinder, 3.0-liter, 24-valve DOHC engine, a 4-speed Electronically Controlled Transmission with intelligence (ECT-i), 4-wheel ventilated disc brakes with an Anti-Lock Braking System (ABS), vehicle-speed-sensing, hydraulic-reaction type, progressive power steering, and available Traction Control System (TRAC).

The target market segment were consumers who saw themselves as youthful and self-confident with a zest for life and a passion about driving.

GS 300/400-Current Models

In 1998, the powerful GS 400 was added to the product line featuring a V8 engine and Variable Valve Timing with intelligence (VVT-i)

The Lexus GS 300 has a five-speed automatic Electronically Controlled Transmission with intelligence (ECT-i). It features overdrive fifth gear, an auto-select shift program, and a flex-lockup torque converter.

The GS 300 is a Transitional Low-Emission Vehicle (T-LEV), the engine is a 3.0-liter in-line 6 with aluminum heads. It has four valves per cylinder, twin cams, and continuously Variable Valve Timing with intelligence (VVT-i). The engine produces 225 horsepower at 6,000 rpm and 220 lb-ft torque at 4,000 rpm.

The four sensor, Anti-lock Braking System (ABS) includes front-wheel vented and power-assisted disc brakes and Traction Control (TRAC).

The GS 300 has double wishbone four-wheel independent suspension, with coil springs, gas pressure shock absorbers, rear strut rods, front and rear stabilizer bars, and vehicle-speed-sensing, progressive power-assisted rack-and-pinion steering.

Safety features include:

- Vehicle Skid Control (VSC)
- Front seat-mounted side-impact airbags
- Three-point seatbelts with height-adjustable anchors, pretensioners and force limiters
- Vehicle theft-deterrent and immobilizer system, with in-key transponder
- Daytime running lights

Other features include:

- Automatic dual-zone climate control with interior air filter, smog sensor and automatic recirculating mode
- Multi-function remote entry system
- Three-way programmable transmitter to activate garage door or driveway gate
- Power tilt-and telescopic steering column with automatic tilt-away
- Remote trunk-lid and fuel-filler door release
- Cruise Control

Options include:

- Nakamichi Audio System
- Navigation System Package

Like the GS 300, the GS 400 has a five-speed automatic Electronically Controlled Transmission with intelligence (ECT-i), overdrive fifth gear, an auto-select shift program, and a flex-lockup torque converter. An E-shift System has been developed which enables the driver to change gears using transmission shift switches located on the steering wheel.

Also a Transitional Low-Emission Vehicle (T-LEV), the GS 400 has a 4.0-liter engine, V8 with aluminum block and heads, four valves per cylinder, four cams, and continuously Variable Valve Timing with intelligence (VVTi). The engine produces 300 horsepower at 6,000 rpm and 310 lb-ft torque at 4,000 rpm.

The four sensor, Anti-lock Braking System (ABS) includes front-wheel vented and power-assisted disc brakes and Traction Control (TRAC).

The GS 400 has double-wishbone four-wheel independent suspension, with coil springs, pressure shock absorbers, rear strut rods, front and rear stabilizer bars, and vehicle-speed-sensing, progressive power-assisted rack-and-pinion steering.

Safety features include:

- Vehicle Skid Control (VSC)
- Front seat-mounted side-impact airbags
- Three-point seatbelts with height-adjustable anchors, pretensioners and force limiters
- Electrochromic rearview mirrors, with outside defoggers
- Vehicle theft-deterrent and immobilizer system, with in-key transponder
- Daytime running lights

Other features include:

- Automatic dual-zone climate control with interior air filter, smog sensor and automatic recirculating mode
- Multi-function remote entry system
- Three-way programmable transmitter to activate garage door or driveway gate
- Power tilt and telescopic steering column with automatic tilt-away
- Remote trunk-lid and fuel-filler door release
- Cruise Control

Options include:

- Nakamichi Audio System
- Navigation System Package

The GS 300/400 demographics are shown below. As you can see, the demographics for these customers are slightly different than those of the LS 400.

Lexus GS 300 Customer Demographics

% **Male:** 61%
% **College Educated:** 73%
Median Price Paid: $41,000
Median Income: $147,700
Median Age: 49
% **with Children <18 in Household:** 33%
% **Married:** 77%
% **Leased:** 53%

Lexus GS 400 Customer Demographics

% **Male:** 80%
% **College Educated:** 73%
Median Price Paid: $49,000
Median Income: $198,300
Median Age: 50
% **with Children <18 in Household:** 37%
% **Married:** 81%
% **Leased:** 51%

The LEXUS SC 300/400

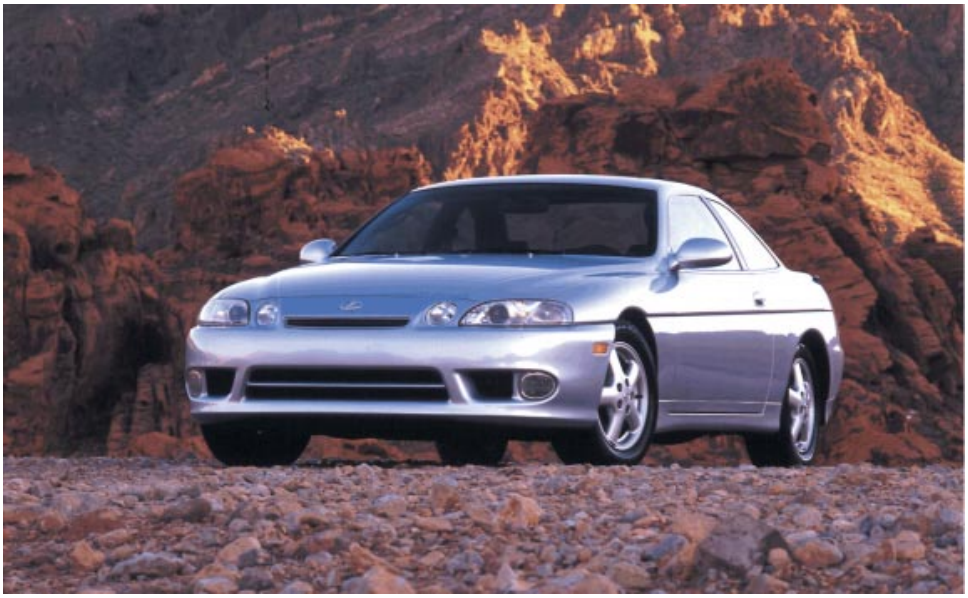

Fig. 1-5

SC 300/400

The SC 300 and SC 400 were first introduced in the 1992 model year. Designed at the Calty Design Studio in Newport Beach, California, these distinctive sport coupes combine performance, style, and luxury with a prestigious sporty image.

The target market segment for these models were successful, independent drivers who take pride in style. They desire performance and an enjoyable driving experience while still placing a premium on creature comforts.

The first SC 300 featured an in-line 6-cylinder, 3.0-liter, 24-valve DOHC engine, and was available with either a 4-speed automatic or a 5-speed manual transmission.

NOTE

The 5-speed manual transmission was discontinued in 1997.

The first SC 400 featured a V8, 4.0-liter, 32-valve DOHC engine, a 4-speed Electronically Controlled Transmission with intelligence (ECT-i), 4-wheel ventilated disc brakes, an Anti-Lock Braking System (ABS), an available Traction Control System (TRAC), and vehicle-speed-sensing, hydraulic-reaction-type, progressive power steering.

SC 300/400-Current Models

The SC 300 has a four-speed automatic Electronically Controlled Transmission with intelligence (ECT-i). It features overdrive fourth gear, an auto-select shift program, and a flex-lockup torque converter.

The SC 300 features a 3.0-liter in-line 6, iron block and aluminum head. It is a Transitional Low-Emission Vehicle (T-LEV). It has four valves per cylinder, twin cams, and continuously Variable Valve Timing with intelligence (VVT-i). The engine delivers 225 horsepower at 6,000 rpm and 220 lb-ft torque at 4,000 rpm.

Large-diameter, vented disc brakes provide immediate stopping power, and work with a four-sensor Anti-lock Braking System (ABS).

The double-wishbone suspension with speed-sensitive rack-and-pinion system gives the SC 300 a refined ride compliance with optimum grip and predictable response.

Safety features include:

- Three-point seatbelt with pre-tensioners
- Vehicle theft-deterrent and immobilizer system, with in-key transponder
- Daytime running lights

Other features include:

- Drive Computer
- Cruise control
- Automatic climate control
- Remote entry system
- Power tilt-and telescopic steering column

Options include:

- Nakamichi Audio System
- Traction Control System (TRAC)

The current SC 400 has a five-speed automatic Electronically Controlled Transmission with intelligence (ECT-i). It has overdrive fifth gear, an auto-select shift program, and a flex-lockup torque converter.

A Transitional Low-Emission Vehicle (T-LEV), the engine is a 4.0-liter V8 with aluminum block and heads. It has four valves per cylinder, four cams, and continuously Variable Valve Timing with intelligence (VVT-i). The engine delivers 290 horsepower at 6,000 rpm and 300 lb-ft torque at 4,000 rpm.

The four sensor, Anti-lock Braking System (ABS) includes four-wheel vented, power-assisted discs.

The SC 400 has double-wishbone four-wheel independent suspension, with coil springs, gas-pressure shock absorbers, rear strut rods, front and rear stabilizer bars, and speed-sensitive rack-and-pinion steering.

Safety features include:

- Three-point seatbelt with pre-tensioners
- Vehicle theft-deterrent and immobilizer system, with in-key transponder
- Daytime running lights

Other Features include:

- Drive computer
- Cruise control
- Automatic climate control
- Remote entry system
- Power tilt-and telescopic steering column

Options include:

- Nakamichi Audio System
- Traction Control System (TRAC)

The SC 300 and SC 400 models appeal to a different target audience as shown below.

Lexus SC 400 Customer Demographics

% **Male:** 63%
% **College Educated:** 66%
Median Price Paid: $55,000
Median Income: $181,300
Median Age: 52
% **with Children <18 in Household:** 17%
% **Married:** 64%
% **Leased:** 53%

Lexus SC 300 Customer Demographics

% **Male:** 40%
% **College Educated:** 66%
Median Price Paid: $46,000
Median Income: $129,200
Median Age: 48
% **with Children <18 in Household:** 22%
% **Married:** 65%
% **Leased:** 50%

The LEXUS ES 300

Fig. 1-6

ES 300

First introduced in model year 1992, the ES 300 replaced the earlier model ES 250 (1990 model year introduction). It featured a 3.0-liter V-6 engine with improved engine performance, replacing the V-6, 2.5-liter, 24-valve DOHC engine of the ES 250. It offered a 5-speed manual transmission, or a 4-speed electronically controlled automatic transmission (ECT).

A blend of luxury, performance, safety, and value targeted a market segment of consumers entering the luxury car market for the first time.

The ES 300 has a four-speed automatic Electronically Controlled Transmission (ECT). Featuring overdrive fourth gear, a lockup torque converter, and slope-compensation control.

ES 300-Current Model

The engine in the ES 300 is a 3.0-liter V6 with aluminum block and heads. It has four valves per cylinder, four cams, and continuously Variable Valve Timing with intelligence (VVT-i). The engine delivers 210 horsepower at 5,800 rpm and 220 lb-ft torque at 4,400 rpm.

The four-sensor, Anti-lock Braking System (ABS) includes four-wheel power-assisted discs, and Traction Control (TRAC).

The ES 300's carefully balanced front-wheel-drive chassis employs a fully independent MacPherson strut suspension. Gas-pressure shock absorbers and stabilizer bar are fitted front and rear.

The ES 300 has engine-speed-sensing, power-assisted rack-and-pinion steering.

Safety features include:

- Front seat-mounted side-impact airbag
- Three-point seatbelts employ pretensioners and force limiters
- Daytime running lights
- Theft-deterrent system

Other features include:

- Cruise control
- Automatic climate control
- Multi-function remote entry system with rolling-code technology
- Remote electric trunk-lid and fuel-filler door release

Options include:

- Nakamichi Audio System
- Vehicle Skid Control (VSC) Demographics for this model reflect a very different type of Lexus customer.

Lexus ES 300 Customer Demographics

% **Male:** 51%
% **College Educated:** 71%
Median Price Paid: $34,000
Median Income: $112,600
Median Age: 53
% **with Children <18 in Household:** 19%
% **Married:** 74%
% **Leased:** 48%

The LEXUS LX 470

Fig. 1-7

LX 470

Introduced in model year 1998, the LX 470 replaced the earlier luxury 4x4 model LX 450 (introduced in 1996). It featured a 4.7-liter, four-cam, 32valve V8 engine (replacing the in-line 6-cylinder, 4.5-liter, 24-valve DOHC engine of its predecessor the LX 450). The engine provides 8% more horsepower and 16% more torque than the LX 450.

This market segment represents consumers with highest median income and the lowest median age of all Lexus buyers. These drivers want the power and rugged quality of a sport utility vehicle without compromising luxury, comfort, safety, and reliability.

The LX 470 has a four-speed automatic Electronically Controlled Transmission (ECT). It includes overdrive fourth gear, dual shift programs, and a lockup torque converter.

The outstanding 4.7-liter V8 engine has the first four-cam, 32-valve V8 to be offered in an SUV. The engine produces 230 horsepower at 4,800 rpm and 330 lb-ft torque at 3,400 rpm.

The LX 470 has a four-sensor, Anti-lock Braking System (ABS) with four-wheel vented, power-assisted discs.

A double-wishbone independent front suspension with torsion bars provides a smooth ride. The LX 470 has four trailing links, coil springs, front and rear stabilizer bars, and power-assisted rack and pinion steering. It also includes Adjustable Height Control (AHC) and Adaptive Variable Suspension (AVS).

Safety features include:

- Front seat-mounted side-impact airbags
- Three-point seatbelts front, middle and outboard rear, with pretensioners and force limiters
- Full-time four-wheel drive
- Outside mirrors with auto-tilt-down in reverse
- Vehicle theft-deterrent and immobilizer system, with in-key transponder
- Daytime running lights

Other features include:

- Cruise control
- Automatic climate control with interior air filter, smog sensor, and independent temperature control for rear passengers
- Power tilt-and-telescopic steering column with automatic tilt-away
- Remote hood and fuel-filler door release

Options include:

- Nakamichi Audio System
- Newly designed roof rack

Lexus LX 470 (Sport Utility) Customer Demographics

% **Male:** 51%
% **College Educated:** 69%
Median Price Paid: $57,700
Median Income: $260,500
Median Age: 46
% **with Children <18 in Household:** 59%
% **Married:** 89%
% **Leased:** 38%

The LEXUS RX 300

Fig. 1-8

RX 300

Introduced in model year 1999, the RX 300 was designed to combine the ride and luxury that buyers expect from a Lexus sedan with the style, versatility, and all-weather capabilities of an SUV.

The target market segment for this model include consumers with active lifestyles more likely to use their SUV for on-road purposes. They are likely to be previous SUV owners or previous owners of near-luxury vehicles attracted by the RX 300's sporty appeal.

The RX 300 has a four-speed automatic Electronically Controlled Transmission (ECT) with dual shift programs, a flex-lockup torque converter, and slope-compensation control.

The RX 300 has a 3.0-liter V6 aluminum block and heads, with DOHC, four-valve-per-cylinder, and Variable Valve Timing with intelligence (VVT-i). The engine produces 220 horsepower at 5,800 rpm and 222 lb-ft torque at 4,400 rpm.

The braking system includes large disc brakes with vented rotors in front. A standard four-sensor, four-channel Anti-lock Braking System (ABS) manages each wheel individually.

The four-wheel independent suspension, using MacPherson struts, coil springs, and stabilizer bars prove responsiveness unexpected in an SUV.

The RX 300 has engine-speed-sensing, power-assisted rack-and-pinion steering.

Safety features include:

- Front seat-mounted side-impact airbags
- Three-point seatbelts with height-adjustable anchors, pre-tensioners and force limiters
- Vehicle theft-deterrent and immobilizer system, with in-key transponder
- Daytime running lights

Other features include:

- Cruise control
- Automatic climate control
- Multi-function remote entry system
- Remote fuel-filler door release

Options include:

- Nakamichi Audio System
- Newly designed roof rack

Lexus RX 300 (Sport Utility) Customer Demographics

% **Male:** 56%	**Median Age:** 47
% **College Educated:** 72%	% **with Children <18 in Household:** 32%
Median Price Paid: $38,000	% **Married:** 91%
Median Income: $131,300	% **Leased:** 41%

The Lexus Commitment to Perfection

The Lexus commitment to perfection begins with the resolve to produce the finest products in the world and to build and maintain an unparalleled dealership network to service and distribute Lexus products. The Lexus commitment to complete customer satisfaction and long-term owner retention is centered in our commitment to our customers.

Our goal is to provide our customers with an ownership experience that not only meets, but exceeds their expectations. In order to exceed our customer's expectations, we need to know who our customer is.

As demonstrated above, our “typical” customer is not typical at all. The demographics show us that the average Lexus customer is:

- **Affluent -** The median income of our customer is approximately $170,000 per year.
- **Age -** The median age is 50 years old.
- **Occupation -** They are business leaders, professional people, or retired persons.
- **Education -** They are college educated and very well informed.

The Lexus customer is sophisticated, intelligent, educated, and well informed. They have access to (and use) the Internet and other automobile industry resources to research industry products prior to investing time in a dealership visit. They probably have conducted their own comparative analysis of our product against those of the competitors when they first decided to investigate the purchase of a Lexus.

They expect:

- Extraordinary engineering quality
- A luxury appearance and comfortable feel
- Amenities and unique innovative features that stand out from the competition
- Assurance that state-of-the art safety and environmental design considerations have been addressed
- A sense of value; a belief that the quality, prestige, and reputation are equitable to the cost of the product

The principles of integrity, respect, trust and commitment were the principles that contributed to the initial success of Lexus. They are the same principles that have allowed us to position ourselves as a leader in the U. S. luxury-car market. They are the principles that will lead us to attain our goals on a global level in the world-class luxury-car market.

The Lexus tradition of excellence includes a level of customer service unparalleled in the industry. The expertise and professionalism of Lexus associates reflect our integrity and commitment to our product, where respect for the Lexus customer cultivates a trust in our credibility and reliability.

In the eyes of the customer, **you are Lexus**. As a Lexus Technician or Diagnostic Specialist, you have a pivotal role in establishing confidence in Lexus products. Approach any interaction with customers or potential customers from a positive perspective. Your dedication to quality, customer service and total customer satisfaction will enhance the customer’s impression of our products.

What is Lexus?

Lexus is.....	**Engineering sophistication and manufacturing quality**
Lexus is.....	**Luxury and performance**
Lexus is.....	**An image and an expectation of excellence**
Lexus is.....	**Valuing the customer as an important individual**
Lexus is.....	**Treating the customer the way THEY want to be treated**
Lexus is.....	**A total experience that reflects professionalism and a sincere commitment to satisfaction**
Lexus is.....	**"Doing it right the first time"**
Lexus is.....	**Caring on a personal level**
Lexus is.....	**Exceeding customer expectations**
AND.....	**In the eyes of the customer**

I AM LEXUS!!!

When you answer a technical question, perform a service or routine maintenance for a Lexus customer, your personal and undivided attention to the customer concern, your response to their needs, and your commitment to resolve any issues, reflect the total quality of the Lexus experience. Their expectation is that Lexus Service Technicians are highly skilled, experienced, and knowledgeable about the product.

Your personal attention ultimately affects the customer's perceptions of their vehicle, and of Lexus as a company. Their perception of Lexus products together with their experience with the Lexus Service Department will determine if their next purchase, or lease, will be another Lexus.

The customer's first contact with the service department begins during a pre-delivery inspection called PDS. The Pre-Delivery Service (PDS) sets the stage for the Lexus ownership experience. Upon delivery, it is the first time the customer will see the vehicle after negotiating its purchase. The vehicle is no longer a Lexus, it is now, his or her Lexus. Assuring that the vehicle is in the most perfect state of appearance and operation is critical.

The customer is enthusiastic about delivery of his or her new Lexus and anxious to experience the luxury of driving it and operating the technologically-advanced features installed. The customer wants to demonstrate these features to family and friends.

This is the point at which customer retention and brand loyalty is first established. This is where the Lexus ownership experience begins, and it is imperative, that you as a Lexus associate, assist and contribute in a positive way to the process which demonstrates the Lexus award-winning customer satisfaction philosophy "to exceed expectations."

Favorable recommendations of Lexus to friends and colleagues will generate new business and contribute to the continued success and prosperity of Lexus in the automotive industry. Treat each customer as a guest in your home. Service each vehicle as you would one for your own mother, father, child, or loved one.

JD Power & Associates

J. D. Power and Associates is a high profile, independent marketing-information firm that conducts and publishes prestigious and commonly quoted surveys of new-car owners for leading vehicle makes and models in the automobile industry. In these surveys, new-car owners rate the quality of their new vehicles, as well as their sales, service, and ownership experiences.

Lexus has been the recipient of numerous J. D. Power and Associates awards since its beginning in 1989 including:

- Seven-time winner of the “#1 Nameplate in Customer Satisfaction”
- Four-time winner of “Best Overall Car Line in Sales Satisfaction”
- BEST MAKE in Long-Term Dependability for five years in a row

We are going to look at two of the most recent J. D. Power and Associates studies which are of particular interest to us in the service department from a short and long-term perspective.

- Initial Quality Study 2 (IQS2), a measure of owner reported problems and repair experiences during the first months of ownership (90 days).
- Vehicle Dependability Study (VDI), satisfaction with the vehicle as measured by incidence and severity of problems (service experiences also rated) during 4 - 5 years of ownership.

J. D. Power and Associates Studies are of importance to us in a number of ways.

They are considered, by customers and others in the industry, as:

- reliable indices of a random sampling of customer opinion
- indicative of possible trends in company performance and/or product and service quality

These independent surveys/studies (within the realm of their defined parameters) provide excellent additional sources of input, to increase our awareness of the customer’s most current opinions about our products.

NOTE

Lexus conducts two internal customer surveys:

- The New Vehicle Sales and Delivery Survey (NVSDS) which compiles and analyzes customer evaluations of the sales and delivery performance at the dealership.
- Lexus Service Survey (LSS) sent to all customers who receive warranty service from a dealership, measuring these owners' experiences with the dealership service department.

Initial Quality Study (IQS2)

The J. D. Power and Associates Initial Quality Study 2 (IQS2) provides information based upon:

- **Sampling criteria -** a random sampling of owner reported problems and experiences (via mail survey) of select industry vehicles, purchased or leased in a particular model year, during a specified range of months, and after a specific period of ownership.
- **Methodology -** 9 key areas of the vehicle are sampled and evaluated for each manufacturer (and model sampled) and an industry ranking is assigned based upon problems per 100 (PP100) vehicles.

Let's look at the results of the most current J. D. Power and Associates IQS2 Study.

1999 Initial Quality Study 2 (IQS2)

All information provided and copy right by J. D. Power & Associates Topline Report, Summary, and Presentation

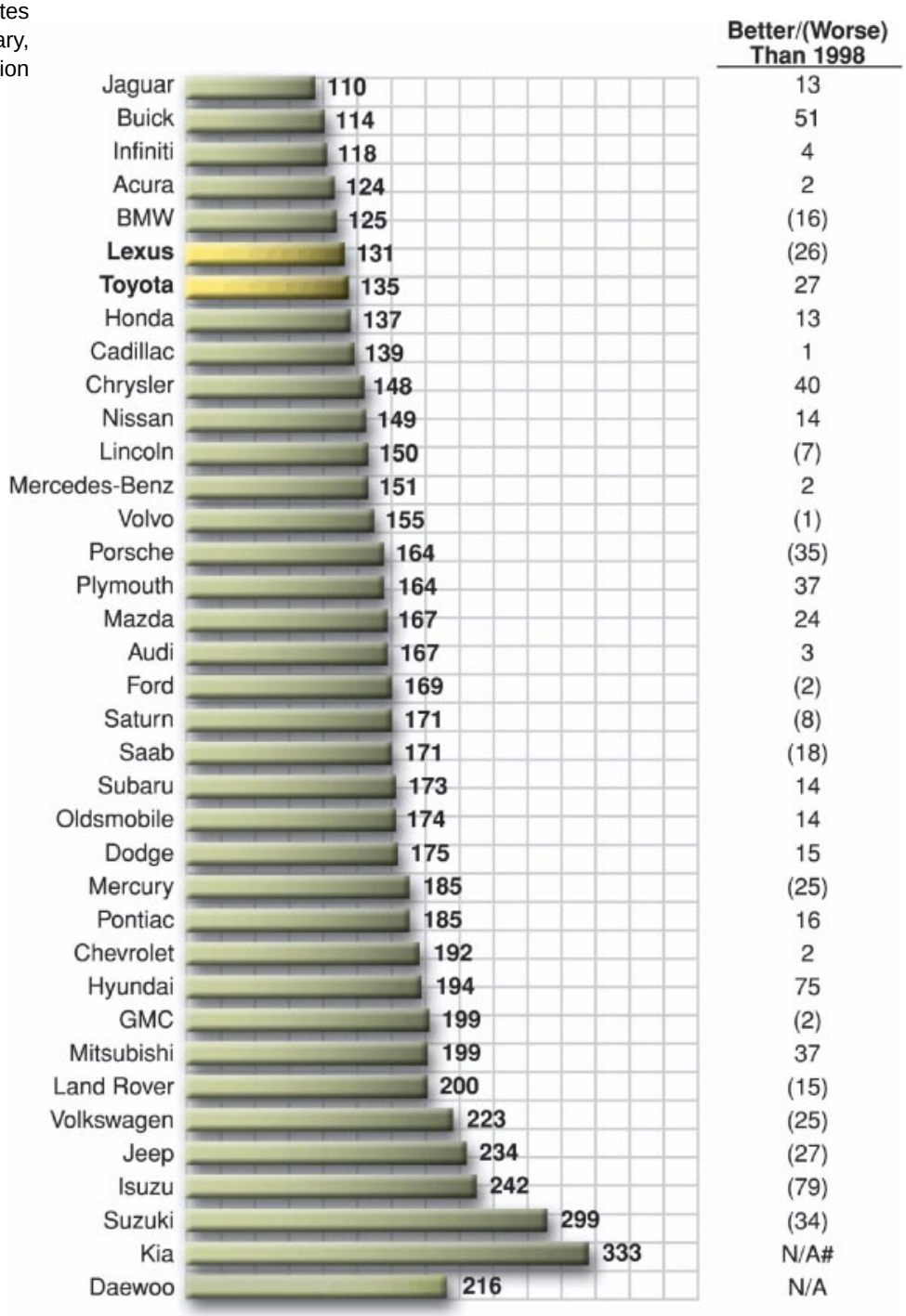

Fig. 1-9

In comparison to the industry - Toyota Motor Sales - Lexus Division was unable to retain its overall top position. The LS 400 continues to be the highest quality vehicle in the study, the GS Sedans improved over last years performance, and the LX 470 ranked number one in its segment.

However, the RX 300 owner reported problems of wind noise and brake noise (squeaks and squeals) were most significant (despite its 3rd place ranking in its segment) and increases in ES 300 brake and wind noise contributed to poor results for the division.

1999 IQS2 Results Comparison with 1998

1999 IQS2 RESULTS			1998 IQS2 RESULTS	
Make/Brand	**Rank**	**P/100**	**Rank**	**P/100**
Jaguar	1	110	4	123
Buick	2	114	16	165
Infiniti	3	118	3	122
Acura	4	124	5	126
BMW	5	125	2	109
Lexus	**6**	**131**	**1**	**105**
Toyota	**7**	**135**	**13**	**162**
Honda	8	137	9	150
Cadillac	9	139	7	140
Chrysler	10	148	21	188

Fig. 1-10

Vehicle Dependability Study (VDI)

As indicated, the Vehicle Dependability Study (VDI) reflects owner-reported satisfaction with dependability and service after 4 to 5 years of ownership. Models rated on this survey met above average criteria in 8 categories to qualify for consideration in the study (see J. D. Power & Associates). VDI is reported as problems experienced per 100 vehicles.

Lexus again earns top honors for the fifth year in a row among all nameplates with 208 PP100, however it is important to note that problems per 100 increased from 167 last year to 208 this year.

1999 Vehicle Dependability Study (VDI)

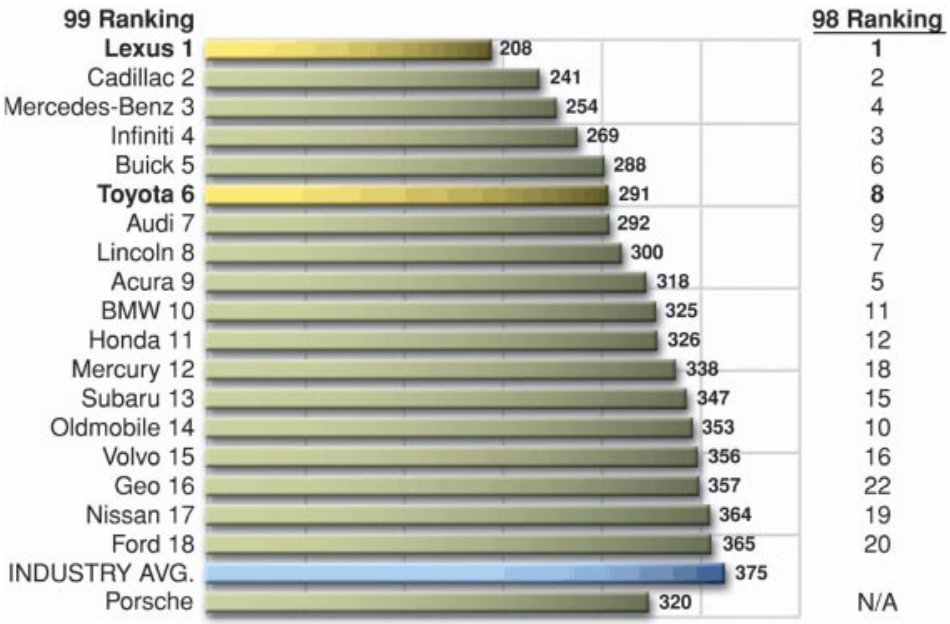

Fig. 1-11

1999 VDI Results Comparison with 1998

1999 VDI Problems Per 100				
	1999		Difference w/ 1998	
Make/Brand	**Rank**	**PP100**	**Rank**	**PP100**
Lexus	**1**	**208**	**0**	**41**
Cadillac	2	241	0	7
Mercedes Benz	3	254	1	-24
Infiniti	4	269	-1	-4
Buick	5	288	1	-2
Toyota	**6**	**291**	**2**	**-22**
Audi	7	292	2	-24
Lincoln	8	300	-1	-12
Acura	9	318	-4	37
BMW	10	325	1	6

Fig. 1-12

The ES 300 and LS 400 both earned segment-leading honors with the LS 400 again posting the best score in the entire industry.

However, Lexus scores in general declined to their lowest level since launch, with all Lexus models suffering significant declines this year. This year's decline is evident in most problem categories, though most serious in the areas of wind noise, brake noise, exterior, and electrical.

1999 LEXUS VDI Results per Model

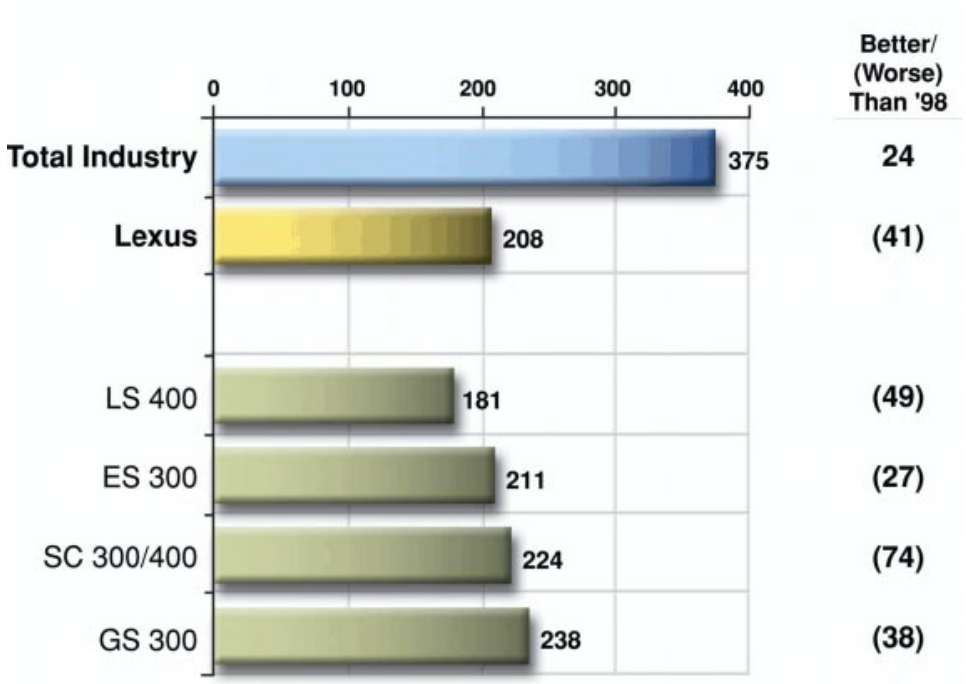

Fig. 1-13

In this competitive industry, our mission to be the "finest and most respected automobile company in the world" takes more than amassing awards for extraordinary engineering quality, world-class luxury, and unprecedented customer service.

We will learn from our mistakes, identify and target our shortcomings. We must confirm and maintain our vision of "the relentless pursuit of perfection" and cultivate the Lexus tradition of excellence through a personal commitment of *kaizen* "continuous improvement".

Lexus Training

As a Lexus Technician or Diagnostic Specialist, Lexus has a certification and training path for you to follow in which you can continuously improve your skills, diagnostic abilities, and profitability.

The Lexus Certification Program is a career development system designed to help you achieve and maintain high standards of professionalism and improve your opportunities by:

- Setting personal development goals
- Providing the information and training opportunities to meet those goals
- Measuring performance and delivering useful feedback
- Recognizing you for your achievements

The three levels of certification are determined by:

- Years of service at a Lexus Dealership
- ASE certification
- Completion of all Lexus Technical Training requirements

The requirements for basic certification require that you complete the Lexus Associate Orientation, Lexus L005 “Introduction to Lexus,” and pass one ASE test.

Advance Certification requires completion of job-specific development activities, training courses, and workshops within a specified timeframe. There are two levels of Advanced Certification, they are, Senior Certified (18 months of Lexus experience) and Master Certified (three years of Lexus experience).

You will also be required to maintain current certified status by completing update training as determined necessary when new products, procedures, and policies are developed. Your Instructor can provide you with the latest information on the requirements for the Lexus Certification program.

ASE Certification

The National Institute for Automotive Service Excellence (ASE) is a nonprofit industry supported organization that provides certification tests in nine separate automotive areas:

Automotive Certification Levels:

- A1 - Engine Repair
- A2 - Automatic Transmission/Transaxle
- A3 - Manual Drive Train & Axles
- A4 - Suspension & Steering
- A5 - Brakes
- A6 - Electrical/Electronic Systems
- A7 - Heating & Air Conditioning
- A8 - Engine Performance
- L1 - Advanced Engine Performance

Lexus encourages you to participate. ASE Certification is recognized by the entire automotive industry as the benchmark test for technician proficiency.

All ASE certification tests are written to measure the technician’s knowledge of diagnostic procedures and repair techniques. Test questions are written by a panel of technical service experts from vehicle manufacturers, repair, test equipment, and parts manufacturers, plus working technicians and educators.

Lexus Area Offices

Fig. 1-14

The Lexus Technical Training Program is administered by Lexus District Technical Managers (DTM) at your Lexus Area Office.

A full range of technical training courses are available. These courses are designed to maintain your diagnostic skills and to provide current state-of-the-art information of new and advanced Lexus technology. Ask your Lexus DTM for a copy of the training catalog and a current schedule of classes.

Course Objectives and Expectations

Terminal Objectives

Focus of the course: Pre Delivery Service on late model vehicles.

- Demonstrate the effective performance of a Pre Delivery Service according to the PDS Manual.
- Develop and demonstrate the appropriate Lexus philosophy during the performance of the Pre Delivery Service.
- Acquire Lexus new model technology information through the process of the Pre Delivery Service.
- Develop and use a diagnostic “troubleshooting tree” approach when verifying an incident.

Instructional Format

Instruction will be performance/competency-based, shop intensive and worksheet driven.

Components of The Course

This course is intended to acquaint you with the Lexus product, organization, and philosophy of customer care.

You will be exposed to:

- a brief history of Lexus and the vehicle model line
- customer demographics associated with each model
- Lexus market position in the industry
- Lexus training opportunities available

It is also designed to provide you with the opportunity to develop the skills necessary to research information in the many Lexus resource materials available to you at your dealership. This will increase your profitability and assist you to effectively perform your job.

Two Assignments

Assignment 1

Objective: To provide you with the opportunity, using the Lexus resource materials, to research and develop a presentation on an assigned vehicle system/feature and present the information to your colleagues.

This exercise is intended to provide you with the opportunity to:

- Demonstrate your abilities to work as a team.
- Practice the communication skills necessary to effectively communicate information to the Lexus customer, service manager, technical assistance hot line personnel, or other colleagues within your dealership.
- Develop your skills accessing, researching, and utilizing Lexus resource materials.

Each of the assignments will augment subject areas of focus derived from the needs analysis conducted for this course. Specifically, the areas of Multi-function Wireless Remote, Theft Deterrent System, Power Windows and Door Locks, Power Seats, Audio Systems, A/C Systems, Homelink, and Supplemental Restraint Systems. The information provided in your presentation will serve to brief all of your colleagues for later application in the Pre-Delivery Service exercises.

Assignment 2 - Pre-Delivery Service (PDS)

Objective: To familiarize you with the PDS manual and procedures and to provide you with an opportunity to conduct a PDS in two parts.

For this assignment you will work in two man teams. Each team will demonstrate Lexus resources material utilization during the Pre-Delivery Service exercises. You will be required to:

- Perform a PDS using the PDS Manual and "New Vehicle Delivery Check Sheet."
- Properly document concerns on a repair order.

Other aspects of the course

You will be introduced to:

- The Lexus Technical Information System (TIS)
- The Lexus Six Step Repair Method
- Repair order documentation
- Troubleshooting flow charts and their application
- Technical Field Product Reports
- The Lexus Battery Analyzer
- The Lexus Diagnostic Scan Tool
  a. Screen Navigation
  b. Diagnostic Trouble Code (DTC) retrieval and erasure
  c. Print features and graphic displays
  d. Perform Active Test Mode
  e. Modify body electronic system operations using the Customized Body Electronic System (C-BEST)
- The Lexus Immobilizer Theft Deterrent System
- The Lexus Navigational System
- The HomeLink® three-way programmable transmitter and garage door opener

You will also be provided with the opportunity to practice the Pre-Delivery Service in two parts. This will give you some experience with the Lexus product line while you familiarize yourself with the materials and techniques required to perform an effective Lexus PDS.

On the last day of class, you will be required to perform a full Pre-Delivery Service on a vehicle. You will identify and properly document any instructor-installed faults on the PDS check sheet, Repair Order, and if necessary, on a Technical Product Report.

Welcome to Lexus!

Notes

Section 2

INTRODUCTION TO LEXUS DIAGNOSTIC RESOURCES

Introduction

As the model line-up of Lexus has grown, so has the amount of information that you will need to know as you deal with various customer concerns or service a Lexus vehicle.

There are five major publications that you will use the most. We will look at the features in each of these resources, and practice their use both in class and on the vehicle:

- **Pre-Delivery Service Manual (PDS)**
- **Owner's Manual (OM)**
- **Repair Manual (RM)**
- **New Car Features (NCF)**
- **Electrical Wiring Diagram (EWD)**

Lexus Reference Material

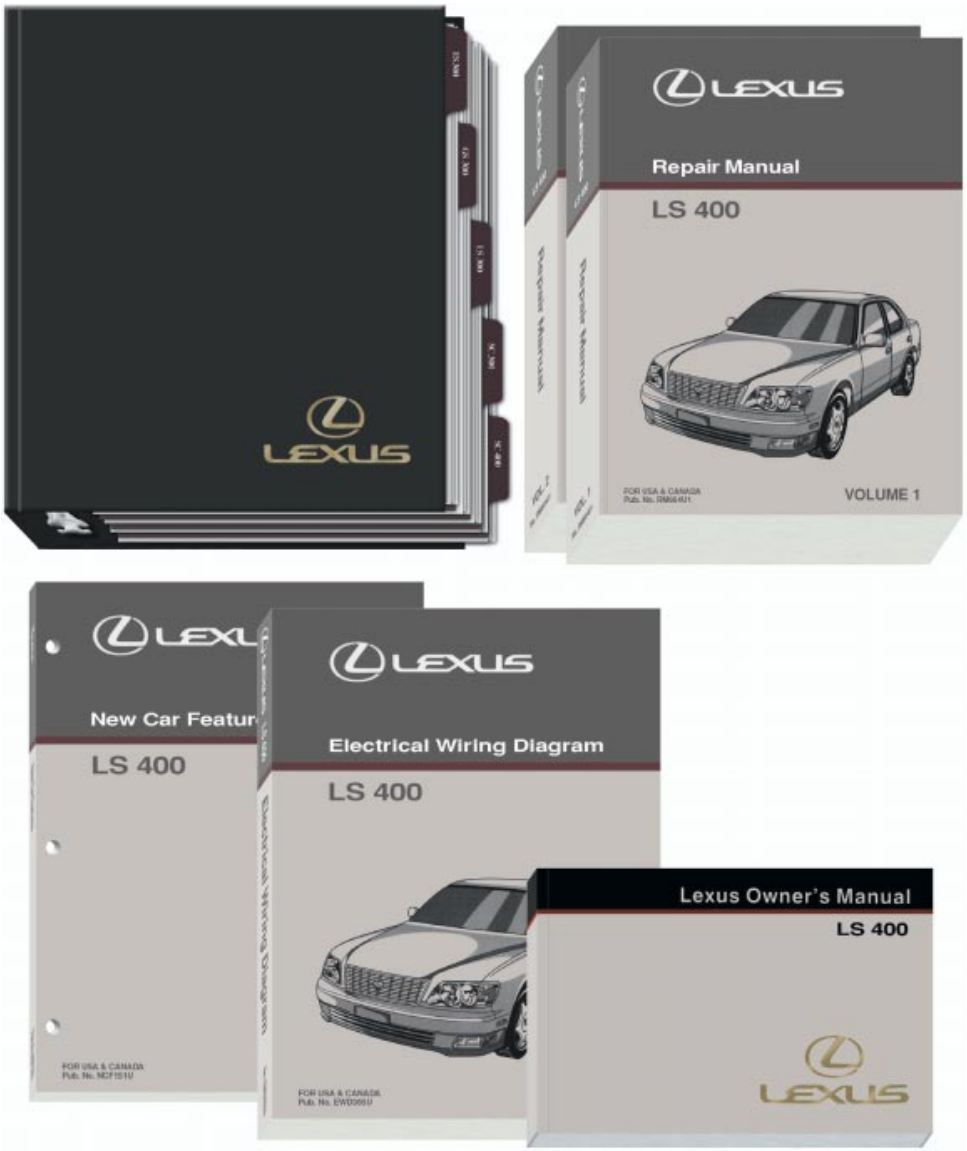

Fig. 2-1

The Pre-Delivery Service Manual (PDS)

First impressions last a long time. The TMC assembly plant and our U.S. ports of entry each strive to achieve industry leading quality during inspections that take place at their facilities. However, your role at the dealership plays the most important role in the process.

The Lexus Covenant promises that "Lexus Cars will be the finest cars ever built" and that "we will win because we will do it right from the start." Our goal is to deliver a product with the best quality. To attain this goal, Lexus has developed a system called *Teamwork in Quality*, an inspection process that delivers the Lexus level of quality involving the factory, the port, and the dealership.

Pre-Delivery Service is a high-profile service that shapes the customer's first impression of their vehicle. It is the final phase of the customer's sales experience and the first phase of the Lexus ownership experience. It is the customer's first experience in the service department and it provides an excellent opportunity for Lexus to exceed the customer's expectations.

You will be performing two full Pre-Delivery Services in this course:

- One, in two parts, so that you can develop an efficient process when performing the service and so that you can relax and take the time to explore the Lexus product line.
- The other Pre-Delivery Service will take place on the last day of class and will evaluate and verify the skills you have developed when performing a Pre-Delivery Service.

Pre-Delivery Service is performed using a PDS Manual and a "New Vehicle Delivery Check Sheet." When you perform a Pre-Delivery Service in this course, you will be using the Pre-Delivery Service Manual and a New Vehicle Delivery Check Sheet just as you would in your dealership. You will also be provided with a Repair Order for documentation and notes.

The PDS Manual is divided into sections; each section is applicable to a specific Lexus model. Each of these model sections is sub-divided into nine sections:

- Before Starting the Pre-Delivery Service (This section has four items that are required of every Lexus vehicle before PDS begins.)
- Vehicle Exterior
- Vehicle Interior
- Luggage Compartment
- Under Hood
- Under Vehicle (On Hoist)
- Road Test (Vehicle Operation)
- Final Inspection
- Two Hours Before Delivery (This section has three items that are required of every Lexus vehicle before delivery to the customer.)

An inspection overview is provided for each of the aforementioned areas of the vehicle Pre-Delivery Service. The overview lists the components and systems that require checking. An inspection detail is provided for each of the components and systems listed in the overview, detailing the procedures and specifications needed to perform these checks.

The New Vehicle Delivery Check Sheet

The New Vehicle Delivery Check Sheet also outlines the systems and components that must be checked during Pre-Delivery Inspection and is organized very similar to the overview section of the PDS Manual. It is similarly sub-divided into nine sections corresponding to the nine sections of the PDS Manual listed previously.

Each section of the Pre-Delivery Service Manual provides details for each of the check items listed on the New Vehicle Delivery Check Sheet. There is a unique New Vehicle Delivery Check Sheet applicable to each Lexus model. These check sheets are updated on a regular basis to reflect the advances in technology and the systems and components installed on each respective model.

The Owner's Manual

Lexus vehicles are equipped with sophisticated computer-controlled systems and accessories that make driving safer and more comfortable. The Owner's Manual (OM) gives the customer a quick reference on how to operate each of these systems on the vehicle.

For Technicians, the OM provides an easy-to-use resource where you can find information concerning:

- **The operational features of each system** - While the Repair Manual can help you to repair conditions on the vehicle, the OM provides the clearest instructions on how to operate any system found on the car. Knowing exactly what each system is supposed to do is critical when performing a Pre-Delivery Service.
- **Safety Related/Logic Functions** - With logic functions built into the ECM, a particular system or device may not operate because of an ECM input that activates a programmed feature (many times safety-related). These "smart" features are built into just about every electronic circuit in the vehicle and are explained clearly in the OM. More on the subject of the input-process-output computer model is covered later in this course.

NOTE

Be sure to reference the OM when explaining the operation of any system on a vehicle to a customer. Additionally, refer the customer to the appropriate section of the OM relating to their inquiry while you explain.

Using this approach enhances your professionalism and provides you the opportunity to demonstrate researching the OM to the customer.

The Owners Manual “Table of Contents” is the best place to start. There are seven sections of the OM:

- Instruments and Controls
- Air Conditioning and Audio
- Starting and Driving
- In Case of Emergency
- Maintenance
- Service Procedures and Specifications
- Reporting Safety Defects For U.S. Owners

There is an index in the back of the OM that is useful to reference information quickly. The back cover has information about fuel, fuel tank capacity, engine oil, engine coolant, A/T fluid type, and tire pressure on the inside and a “Quick Index” on the back.

The Owner's Manual

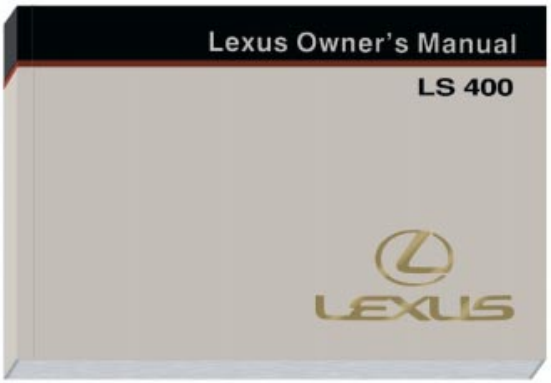

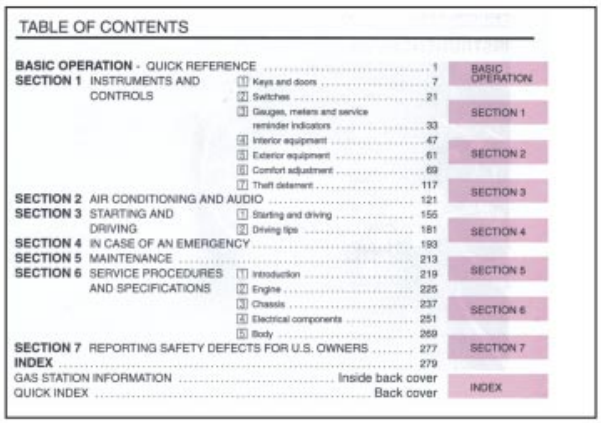

TABLE OF CONTENTS

BASIC OPERATION - QUICK REFERENCE 1
SECTION 1 INSTRUMENTS AND CONTROLS
[1] Keys and doors 7
[2] Switches 21
[3] Gauges, meters and service reminder indicators 33
[4] Interior equipment 47
[5] Exterior equipment 61
[6] Comfort adjustment 69
[7] Theft deterrent 117
SECTION 2 AIR CONDITIONING AND AUDIO 121
SECTION 3 STARTING AND DRIVING
[1] Starting and driving 155
[2] Driving tips 181
SECTION 4 IN CASE OF AN EMERGENCY 193
SECTION 5 MAINTENANCE 213
SECTION 6 SERVICE PROCEDURES AND SPECIFICATIONS
[1] Introduction 219
[2] Engine 225
[3] Chassis 237
[4] Electrical components 251
[5] Body 269
SECTION 7 REPORTING SAFETY DEFECTS FOR U.S. OWNERS 277
INDEX 279
GAS STATION INFORMATION ..... Inside back cover
QUICK INDEX ..... Back cover

BASIC OPERATION
SECTION 1
SECTION 2
SECTION 3
SECTION 4
SECTION 5
SECTION 6
SECTION 7
INDEX

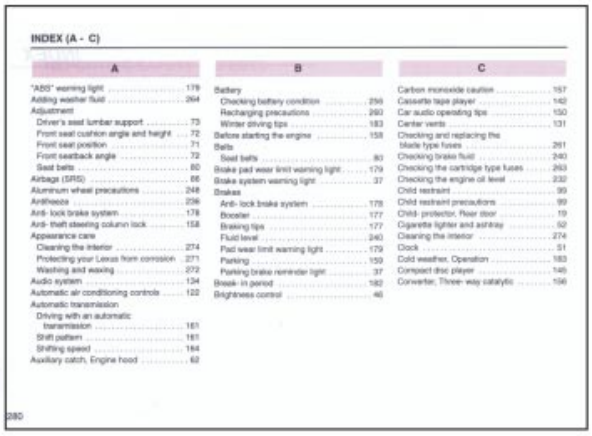

INDEX (A - C)

A

"ABS" warning light 179
Adding washer fluid 264
Adjustment
Driver's seat lumbar support 73
Front seat cushion angle and height 72
Front seat position 71
Front seatback angle 72
Seat belts 80
Airbags (SRS) 66
Aluminum wheel precautions 248
Antifreeze 236
Anti- lock brake system 178
Anti- theft steering column lock 158
Appearance care
Cleaning the interior 274
Protecting your Lexus from corrosion 271
Washing and waxing 272
Audio system 134
Automatic air conditioning controls 122
Automatic transmission
Driving with an automatic transmission 161
Shift pattern 161
Shifting speed 164
Auxiliary catch, Engine hood 62

B

Battery
Checking battery condition 256
Recharging precautions 260
Winter driving tips 183
Before starting the engine 158
Belts
Seat belts 80
Brake pad wear limit warning light 179
Brake system warning light 37
Brakes
Anti- lock brake system 178
Booster 177
Braking tips 177
Fluid level 240
Pad wear limit warning light 179
Parking 159
Parking brake reminder light 37
Break- in period 182
Brightness control 46

C

Carbon monoxide caution 157
Cassette tape player 142
Car audio operating tips 150
Center vents 131
Checking and replacing the blade type fuses 261
Checking brake fluid 240
Checking the cartridge type fuses 263
Checking the engine oil level 232
Child restraint 99
Child restraint precautions 99
Child- protector, Rear door 19
Cigarette lighter and ashtray 52
Cleaning the interior 274
Clock 51
Cold weather, Operation 183
Compact disc player 146
Converter, Three- way catalytic 156

280

Fig. 2-2

There is also a “Basic Operation - Quick Reference Section.” This section is a pictorial index that provides a brief explanation of the instruments and controls on the vehicle and a reference to the appropriate pages where more detail can be found.

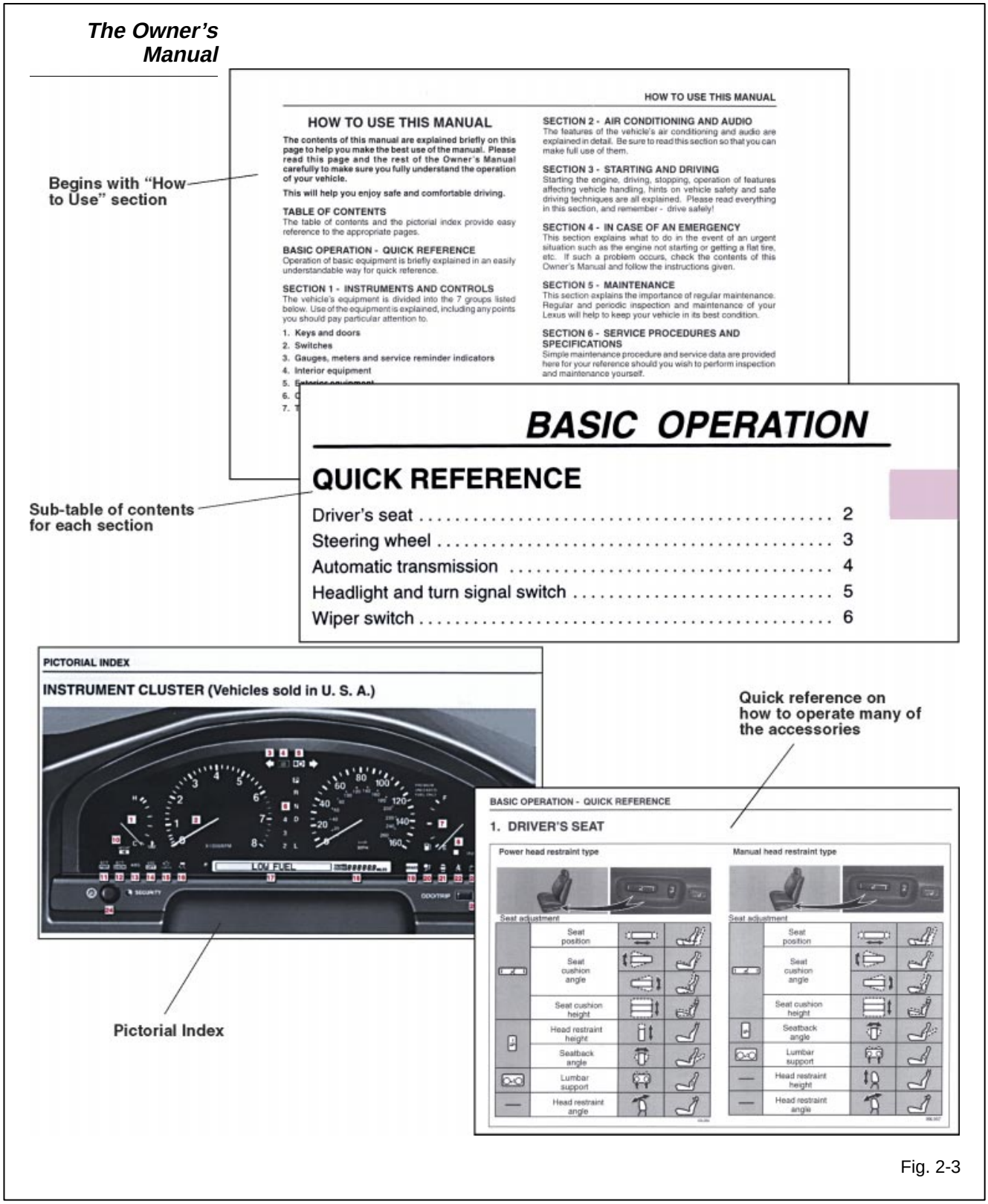

Fig. 2-3

Section 5 contains maintenance information and also provides a reference to pages where more detail about each maintenance item can be found.

Section 6 will probably be the most useful to you as a technician as it provides service information and specifications particular to the model line. Listed below are some typical items found:

- The locations of Vehicle Identification Number (VIN) and Engine ID plates
- General model line information such as:
  - model designation
  - bore and stroke
  - valve clearance
  - drive belt tension oil capacity and type
  - coolant capacity and type
  - fuel type and octane rating
  - spark plugs type
  - battery information
  - tire pressure and recommended rotation
  - fuse locations and ampere rating
  - dimensions and weight of the vehicle
- Recommended automotive fluids that should be used such as:
  - brake fluid
  - power steering fluid
  - automatic transmission fluid

The Owner's Manual Sections 5 and 6

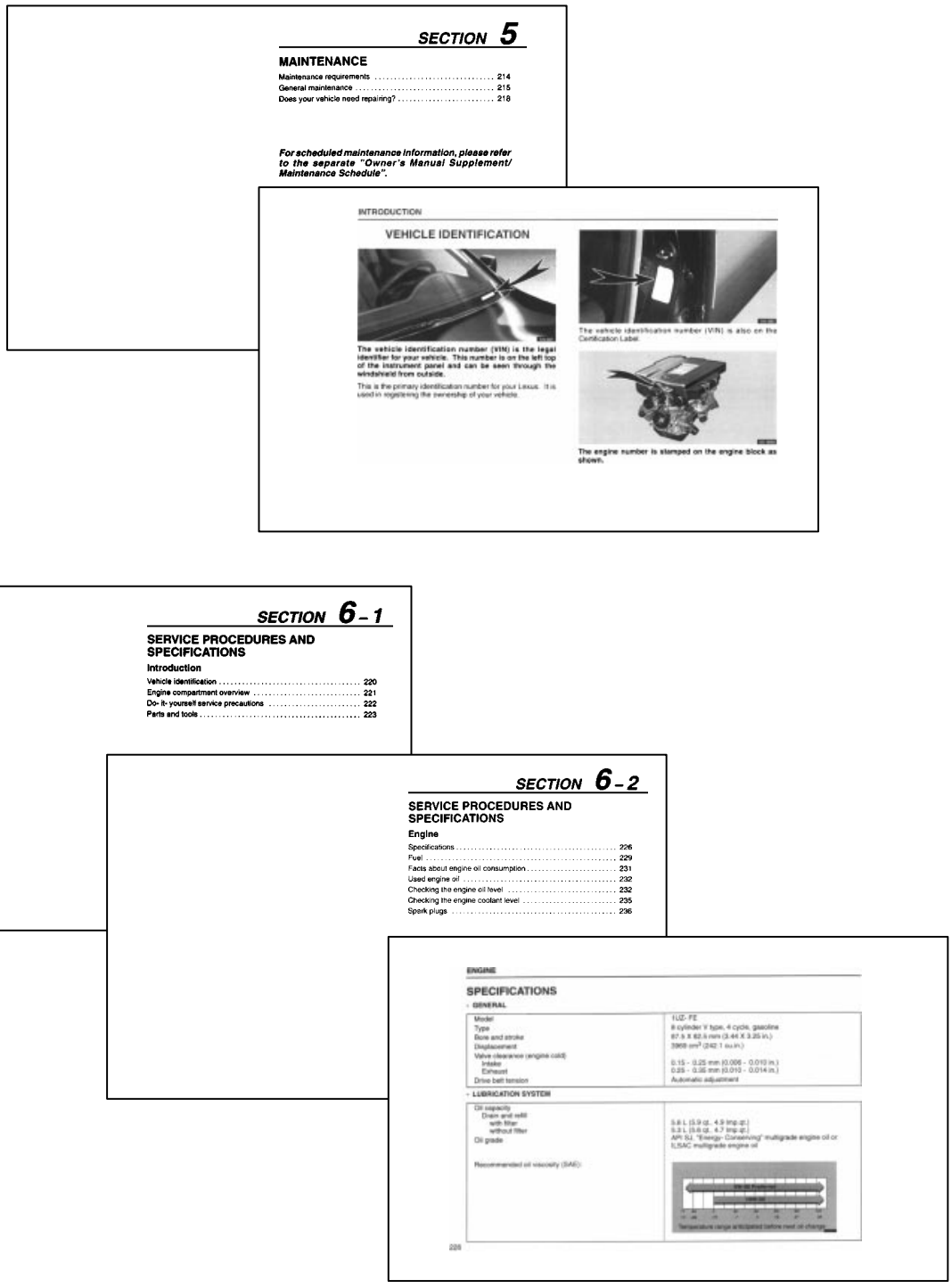

SECTION 5

MAINTENANCE

Maintenance requirements 214
General maintenance 215
Does your vehicle need repairing? 218

For scheduled maintenance information, please refer to the separate "Owner's Manual Supplement/ Maintenance Schedule".

INTRODUCTION

VEHICLE IDENTIFICATION

The vehicle identification number (VIN) is the legal identifier for your vehicle. This number is on the left top of the instrument panel and can be seen through the windshield from outside.

This is the primary identification number for your Lexus. It is used in registering the ownership of your vehicle.

The vehicle identification number (VIN) is also on the Certification Label.

The engine number is stamped on the engine block as shown.

SECTION 6 – 1

SERVICE PROCEDURES AND SPECIFICATIONS

Introduction

Vehicle identification 220
Engine compartment overview 221
Do- it- yourself service precautions 222
Parts and tools 223

SECTION 6 – 2

SERVICE PROCEDURES AND SPECIFICATIONS

Engine

Specifications 226
Fuel 229
Facts about engine oil consumption 231
Used engine oil 232
Checking the engine oil level 232
Checking the engine coolant level 235
Spark plugs 236

ENGINE

SPECIFICATIONS

- GENERAL

Model	1UZ- FE
Type	8 cylinder V type, 4 cycle, gasoline
Bore and stroke	87.5 X 82.5 mm (3.44 X 3.25 in.)
Displacement	3968 cm³ (242.1 cu.in.)
Valve clearance (engine cold)	
Intake	0.15 - 0.25 mm (0.006 - 0.010 in.)
Exhaust	0.25 - 0.35 mm (0.010 - 0.014 in.)
Drive belt tension	Automatic adjustment

- LUBRICATION SYSTEM

Oil capacity	
Drain and refill	
with filter	5.8 L (5.9 qt., 4.9 Imp.qt.)
without filter	5.3 L (5.6 qt., 4.7 Imp.qt.)
Oil grade	API SJ, "Energy- Conserving" multigrade engine oil or ILSAC multigrade engine oil
Recommended oil viscosity (SAE):	

226

Fig. 2-4

Lexus Repair Manuals

The Repair Manual (RM) is your primary source of diagnostic information. Each one, two, or three-volume set of manuals contain separate sections, each dedicated to a different system on the vehicle. The major strengths of the RM are the step-by-step diagnostic procedures it provides for virtually the entire vehicle.

Best Uses

The RM is generally a good source of the following information:

- **Service Specifications**
- **Inspection Procedures**
- **Disassembly/Reassembly Procedures**

NOTE

There are no transmission/transaxle overhaul procedures contained in the RM. Major transmission failures are serviced through the Lexus Re-man transmission program. However, within the AT Section of the Repair Manual, on-vehicle service and inspection information such as valve body service, shift lock system service, floor shift assembly inspection, and transmission/transaxle removal are included. A separate repair manual specific to each individual transmission/transaxle is available covering disassembly, inspection, and assembly procedures.

- **Self Diagnostics information for any ECM Controlled System -** The DI Section of the RM contains information about any system that has self-diagnostic capability. The RM is the only source of information concerning retrieval, interpretation, diagnoses, and clearing of Diagnostic Trouble Codes (DTCs) from the system.

Using the Repair Manual

The Repair Manual (RM) contains pages of valuable diagnostic information. When using the RM, the most difficult part is *finding* the information that you want. To help you do this, let's look at how the sections of the RM are organized:

The RM is divided into sections that cover a specific vehicle area. Each section's page numbers are called out with a two-letter abbreviation indicating the section name. So, for example, page 48 of the Engine Mechanical Section has its page number called out as EM-48. The Maintenance Section is abbreviated MA, the Service Specification is SS, the Ignition Section is IG, and so on.

All sections of the RM are listed on the main Table of Contents. Each section has a black or grey "bleed" tab at the edge of the page which helps you to find the section you want by locating the position of the tab at the right edge of the book.

The Repair Manual

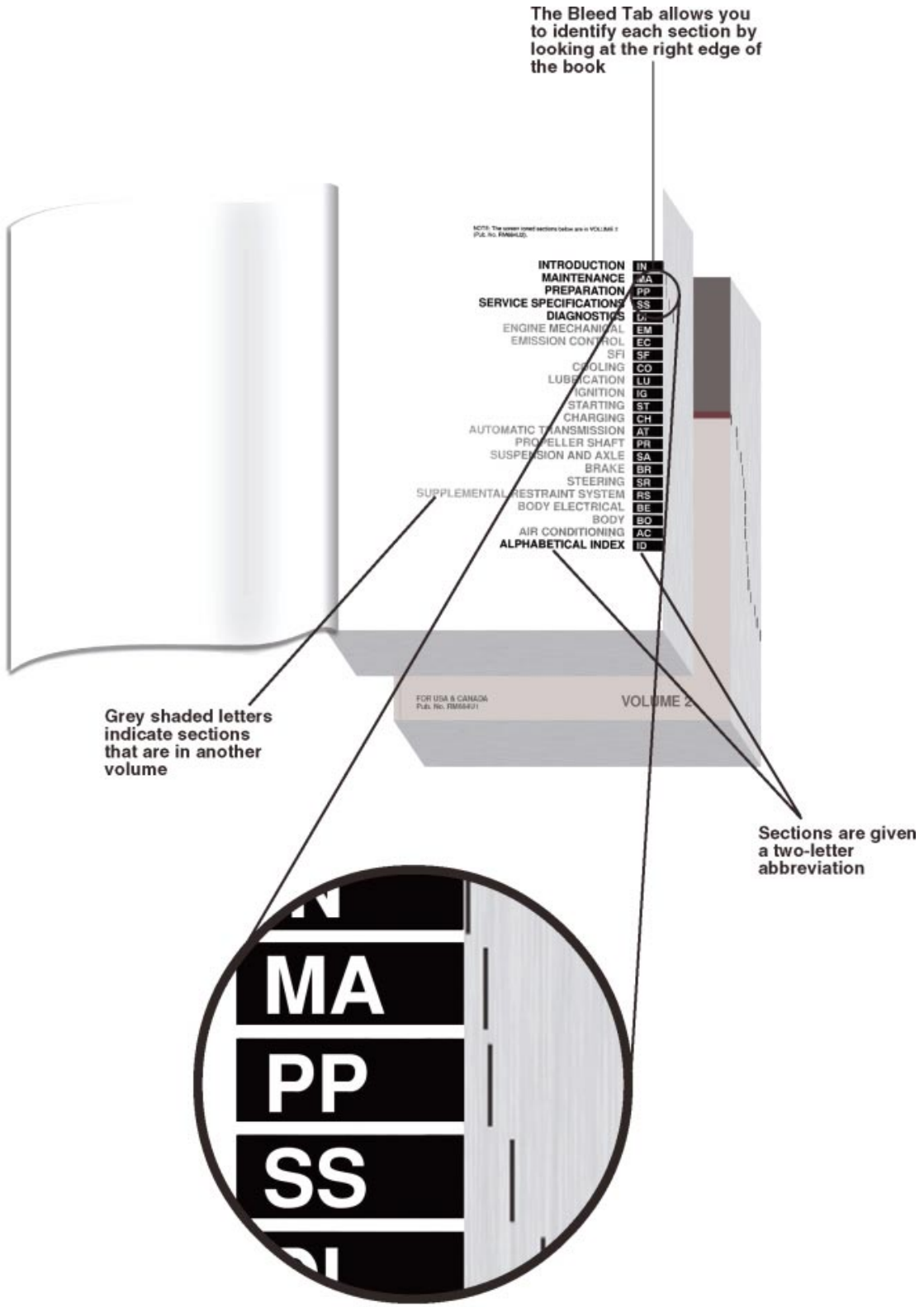

Fig. 2-5

Sections of the Repair Manual

Each section of the manual is divided into the following topics. (Note that the order in which these “sub-sections” are found varies between manuals.)

The Introduction Section - (IN) of the RM is extremely important. It contains information on how to effectively use the Repair Manual, vehicle and engine identification information, vehicle lift and support locations, important precautions, how to trouble shoot ECU controlled systems, how to use the Diagnostic Chart and Inspection Procedure, as well as a list of commonly used abbreviations and a glossary of Lexus and SAE terms.

Index - Each sub-section of the RM has an Index. There is a lot of information in the RM so using the sub-section Index is very important. Each major topic is listed with its corresponding page number.

Preparation - The Preparation section lists the Special Service Tools (SSTs) and Special Service Materials (SSMs) that are used in the section’s procedures. The SST numbers can be cross-referenced with the Lexus SST catalog. With the SST catalog, you can determine if a tool is:

- **Essential -** Part of your dealership’s SST inventory
- **Available -** Available through OTC
- **Locally Available -** Can be obtained locally from a tool truck, etc.

Tools can be ordered from OTC through an 800 number.

Repair Manual Introduction and Preparation Sections

IN-2

INTRODUCTION – HOW TO USE THIS MANUAL

The procedures are presented in a step-by-step format:

- The illustration shows what to do and where to do it.
- The task heading tells what to do.
- The detailed text tells how to perform the task and gives other information such as specifications and warnings.

Example :

Task heading : what to do

21. CHECK PISTON STROKE OF OVERDRIVE BRAKE

(a) Place SST and a dial indicator onto the overdrive brake piston as shown in the illustration.
SST 09350–30020 (09350–06120)

Set part No. — Component part No.

Detailed text : how to do task

(b) Measure the stroke applying and releasing the compressed air (392 — 785 kPa, 4 — 8 kgf/cm² or 57 — 114 psi) as shown in the illustration.
Piston stroke: 1.40 — 1.70 mm (0.0551 — 0.0669 in.)

Specification

Illustration: what to do and where

This format provides the experienced technician with a FAST TRACK to the information needed. The upper case task heading can be read at a glance when necessary, and the text below it provides detailed information. Important specifications and warnings always stand out in bold type.

6. REFERENCES

References have been kept to a minimum. However, when they are required you are given the page to refer to.

7. SPECIFICATIONS

Specifications are presented in bold type throughout the text where needed. You never have to leave the procedure to look up your specifications. They are also found in Service Specifications section for quick reference.

8. CAUTIONS, NOTICES, HINTS:

- CAUTIONS are presented in bold type, and indicate there is a possibility of injury to you or other people.
- NOTICES are also presented in bold type, and indicate the possibility of damage to the components being repaired.
- HINTS are separated from the text but do not appear in bold. They provide additional information to help you perform the repair efficiently.

9. SI UNIT

The UNITS given in this manual are primarily expressed according to the SI UNIT (International System of Unit), and alternately expressed in the metric system and in the English System.

Example:

Torque: 30 N·m (310 kgf·cm, 22 ft·lbf)

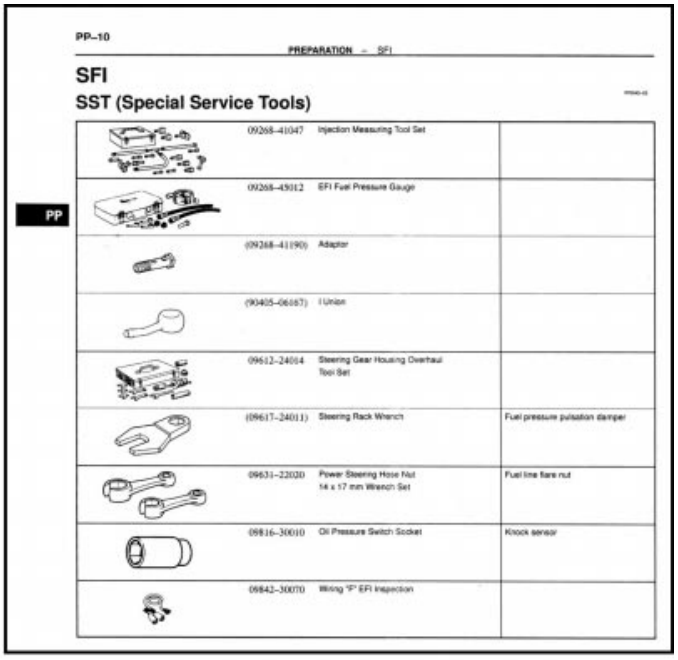

PP–10

PREPARATION – SFI

SFI

SST (Special Service Tools)

09268–41047	Injection Measuring Tool Set	
09268–45012	EFI Fuel Pressure Gauge	
(09268–41190)	Adaptor	
(90405–06087)	Union	
09612–24014	Steering Gear Housing Overhaul Tool Set	
(09617–24011)	Steering Rack Wrench	Fuel pressure pulsation damper
09631–22020	Power Steering Hose Nut 14 x 17 mm Wrench Set	Fuel line flare nut
09816–30010	Oil Pressure Switch Socket	Knock sensor
09842–30070	Wiring 'P' EFI Inspection	

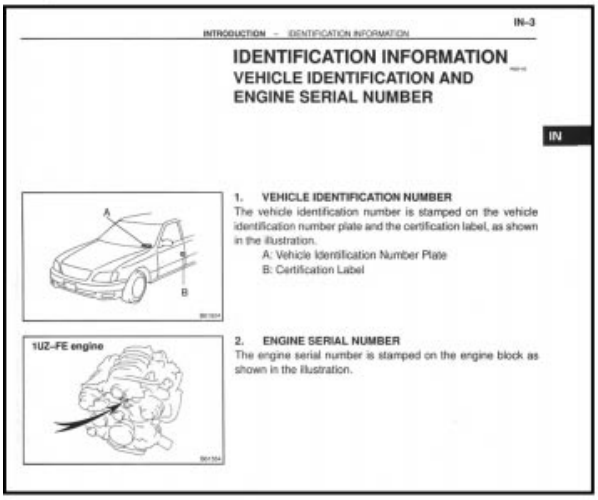

IN-3

INTRODUCTION – IDENTIFICATION INFORMATION

IDENTIFICATION INFORMATION

VEHICLE IDENTIFICATION AND ENGINE SERIAL NUMBER

1. VEHICLE IDENTIFICATION NUMBER

The vehicle identification number is stamped on the vehicle identification number plate and the certification label, as shown in the illustration.

A: Vehicle Identification Number Plate
B: Certification Label

1UZ–FE engine

2. ENGINE SERIAL NUMBER

The engine serial number is stamped on the engine block as shown in the illustration.

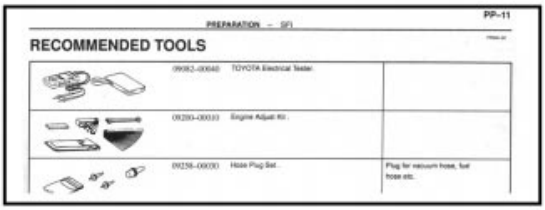

PP–11

PREPARATION – SFI

RECOMMENDED TOOLS

09082–00040	TOYOTA Electrical Tester	
09200–00010	Engine Adjust Kit	
09258–00030	Hose Plug Set	Plug for vacuum hose, fuel hose etc.

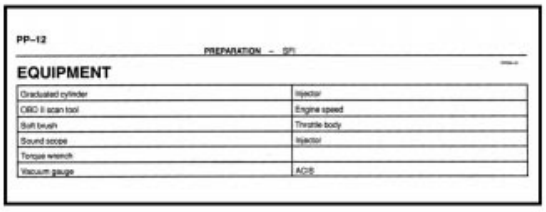

PP–12

PREPARATION – SFI

EQUIPMENT

Graduated cylinder	Injector
OBD II scan tool	Engine speed
Soft brush	Throttle body
Sound scope	Injector
Torque wrench	
Vacuum gauge	ACIS

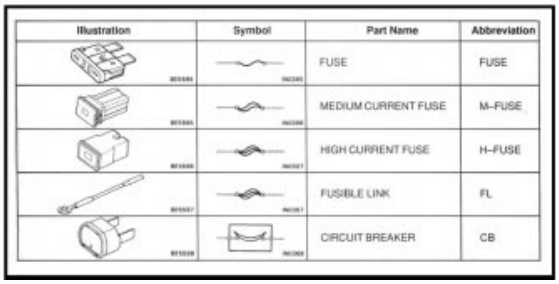

Illustration	Symbol	Part Name	Abbreviation
		FUSE	FUSE
		MEDIUM CURRENT FUSE	M–FUSE
		HIGH CURRENT FUSE	H–FUSE
		FUSIBLE LINK	FL
		CIRCUIT BREAKER	CB

Fig. 2-6

Repair Manual
Engine Mechanical

ENGINE MECHANICAL

CO/HC	EM–1
COMPRESSION	EM–3
VALVE CLEARANCE	EM–4
IGNITION TIMING	EM–9
IDLE SPEED	EM–11
TIMING BELT	EM–12
CYLINDER HEAD	EM–28
ENGINE UNIT	EM–73
CYLINDER BLOCK	EM–88
EXHAUST SYSTEM	EM–119

EM

PREPARATION – ENGINE MECHANICAL PP–3

ENGINE MECHANICAL

SST (Special Service Tools)

09201–01055	Valve Guide Bushing Remover & Replacer 5.5	
09201–41020	Valve Stem Oil Seal Replacer	
09202–70020	Valve Spring Compressor	
(09202–00010)	Attachment	
09213–70010	Crankshaft Pulley Holding Tool	
(90105–08076)	Bolt	
09222–30010	Connecting Rod Bushing Remover & Replacer	
09223–46011	Crankshaft Front Oil Seal Replacer	Camshaft oil seal Crankshaft pulley Crankshaft timing pulley
09223–56010	Crankshaft Rear Oil Seal Replacer	
09316–60011	Transmission & Transfer Bearing Replacer	
(09316–60011)	Replacer Pipe	Crankshaft front oil seal
09330–00021	Companion Flange Holding Tool	Crankshaft pulley

PP

SERVICE SPECIFICATIONS – ENGINE MECHANICAL SS–7

Cylinder block	Cylinder head surface warpage	Maximum	0.07 mm (0.0028 in.)
	Cylinder bore diameter	STD Mark 1	87.500 – 87.510 mm (3.4449 – 3.4453 in.)
		Mark 2	87.510 – 87.520 mm (3.4453 – 3.4457 in.)
		Mark 3	87.520 – 87.530 mm (3.4457 – 3.4461 in.)
		Maximum	87.73 mm (3.4539 in.)
	Main bearing cap bolt tension portion diameter	STD	7.500 – 7.600 mm (0.2953 – 0.2992 in.)
		Minimum	7.20 mm (0.2835 in.)
Piston and piston ring	Piston diameter	STD Mark 1	87.406 – 87.416 mm (3.4411 – 3.4416 in.)
		Mark 2	87.416 – 87.426 mm (3.4416 – 3.4420 in.)
		Mark 3	87.426 – 87.436 mm (3.4420 – 3.4424 in.)
	Piston oil clearance	STD	0.084 – 0.104 mm (0.0033 – 0.0041 in.)
		Maximum	0.124 mm (0.0049 in.)
	Piston ring groove clearance	No.1	0.020 – 0.070 mm (0.0008 – 0.0028 in.)
		No.2	0.010 – 0.050 mm (0.0004 – 0.0020 in.)
	Piston ring end gap	STD No.1	0.250 – 0.450 mm (0.0098 – 0.0177 in.)
		No.2	0.500 – 0.700 mm (0.0197 – 0.0276 in.)
		Oil	0.150 – 0.500 mm (0.0059 – 0.0197 in.)
		Maximum No.1	1.05 mm (0.0413 in.)
		No.2	1.30 mm (0.0512 in.)
		Oil	1.10 mm (0.0433 in.)
Connecting rod	Thrust clearance	STD	0.160 – 0.290 mm (0.0063 – 0.0138 in.)
		Maximum	0.35 mm (0.0138 in.)
	Connecting rod thickness		22.880 – 22.920 mm (0.9008 – 0.9024 in.)
	Connecting rod oil clearance	STD	0.027 – 0.053 mm (0.0011 – 0.0021 in.)
		Maximum	0.065 mm (0.0026 in.)
	Connecting rod bearing center wall thickness (Reference)	Mark 2	1.484 – 1.487 mm (0.0584 – 0.0585 in.)
		Mark 3	1.487 – 1.490 mm (0.0585 – 0.0587 in.)
		Mark 4	1.490 – 1.493 mm (0.0587 – 0.0588 in.)
		Mark 5	1.493 – 1.496 mm (0.0588 – 0.0589 in.)
		Mark 6	1.496 – 1.499 mm (0.0589 – 0.0590 in.)
		Mark 7	1.499 – 1.502 mm (0.0590 – 0.0591 in.)
	Rod bend	Maximum per 100 mm (3.94 in.)	0.05 mm (0.0020 in.)
	Rod twist	Maximum per 100 mm (3.94 in.)	0.15 mm (0.0059 in.)
	Bushing inside diameter		22.005 – 22.014 mm (0.8663 – 0.8667 in.)
	Piston pin diameter		21.997 – 22.006 mm (0.8660 – 0.8664 in.)
	Bushing oil clearance	STD	0.005 – 0.011 mm (0.0002 – 0.0004 in)
		Maximum	0.05 mm (0.0020 in.)
	Connecting rod bolt tension portion diameter	STD	7.200 – 7.300 mm (0.2835 – 0.2874 in.)
		Minimum	7.00 mm (0.2756 in.)
Crankshaft	Thrust clearance	STD	0.020 – 0.220 mm (0.0008 – 0.0087 in.)
		Maximum	0.30 mm (0.0118 in.)
	Thrust washer thickness		2.440 – 2.490 mm (0.0961 – 0.0980 in.)
	Main journal bore diameter on cylinder block (with main bearing)		66.988 – 67.000 mm (2.6372 – 2.6378 in.)
	Main journal oil clearance	STD No.1 and No.5	0.017 – 0.033 mm (0.0007 – 0.0013 in.)
		Others	0.029 – 0.045 mm (0.0011 – 0.0018 in.)
		Maximum No.1 and No.5	0.043 mm (0.0017 in.)
		Others	0.055 mm (0.0022 in.)
	Main journal diameter		66.988 – 67.000 mm (2.6373 – 2.6378 in.)

SS

Fig. 2-7

Inspection/Repair Procedures - Most repair procedures begin with an "exploded view" of the components involved. This illustration points out all fastener locations and also marks all parts that must be replaced during re-assembly.

- **Illustrations** are provided next to each step in the procedure.
- If an **SST** is used, the part number is repeated.
- When **specifications** are listed, they are listed in the Service Specifications Section (SS), metric, and in the familiar English system (ft-lbs., inches).
- **Cautions** are presented in bold type, and indicate there is a possibility of injury to you or other people.
- **Notices** are also in bold type, and indicate there is the possibility of damage to the component if the procedure is not followed.
- **Hints** are separated from the text, and provide additional "tips" to help you perform the repair.

Inspection/Repair Procedures

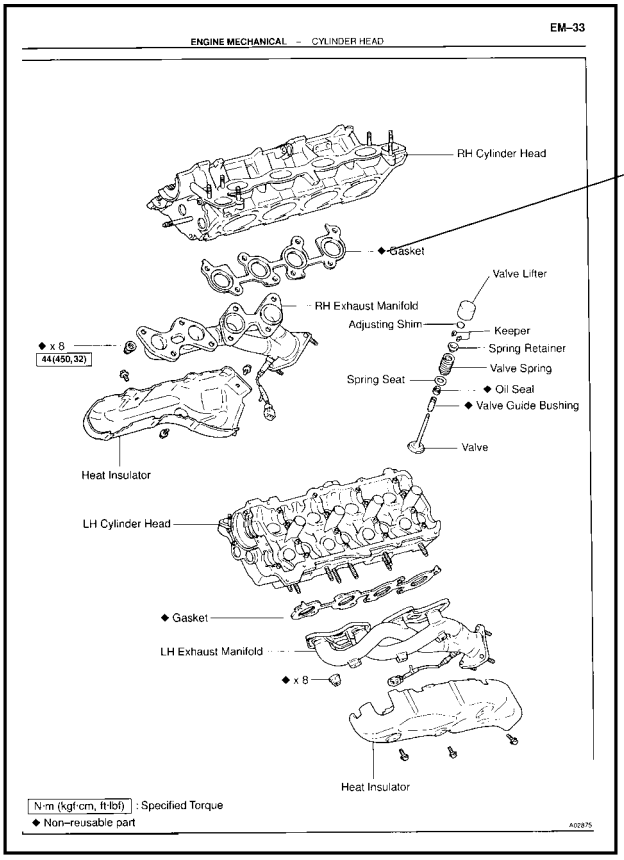

Diamond indicates parts which cannot be reused

Specifications are metric and standard

Illustrations are provided for each step

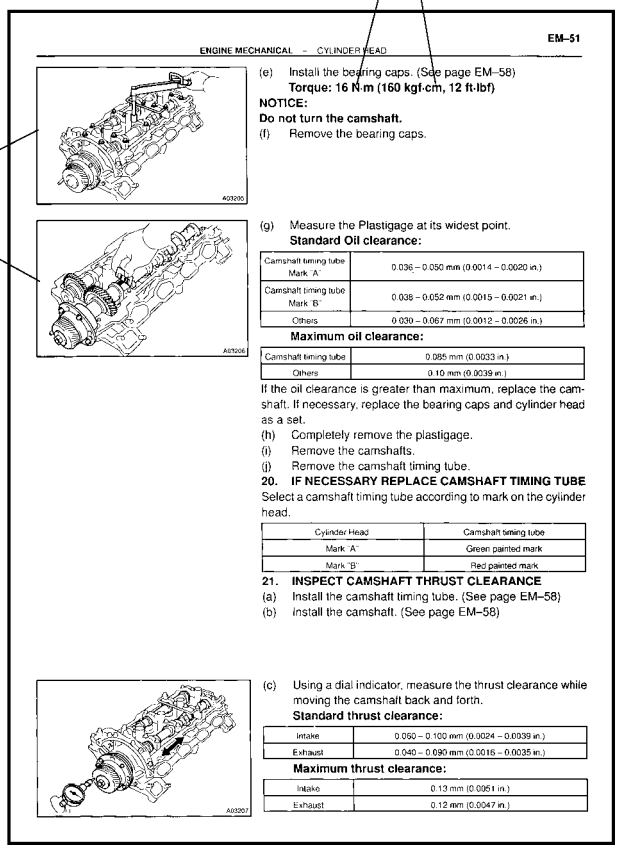

EM–51

ENGINE MECHANICAL – CYLINDER HEAD

(e) Install the bearing caps. (See page EM–58)
Torque: 16 N·m (160 kgf·cm, 12 ft·lbf)

NOTICE:
Do not turn the camshaft.

(f) Remove the bearing caps.

(g) Measure the Plastigage at its widest point.
Standard Oil clearance:

Camshaft timing tube Mark "A"	0.036 – 0.050 mm (0.0014 – 0.0020 in.)
Camshaft timing tube Mark "B"	0.038 – 0.052 mm (0.0015 – 0.0021 in.)
Others	0.030 – 0.067 mm (0.0012 – 0.0026 in.)

Maximum oil clearance:

Camshaft timing tube	0.085 mm (0.0033 in.)
Others	0.10 mm (0.0039 in.)

If the oil clearance is greater than maximum, replace the camshaft. If necessary, replace the bearing caps and cylinder head as a set.

(h) Completely remove the plastigage.
(i) Remove the camshafts.
(j) Remove the camshaft timing tube.

20. IF NECESSARY REPLACE CAMSHAFT TIMING TUBE

Select a camshaft timing tube according to mark on the cylinder head.

Cylinder Head	Camshaft timing tube
Mark "A"	Green painted mark
Mark "B"	Red painted mark

21. INSPECT CAMSHAFT THRUST CLEARANCE

(a) Install the camshaft timing tube. (See page EM–58)
(b) Install the camshaft. (See page EM–58)

(c) Using a dial indicator, measure the thrust clearance while moving the camshaft back and forth.
Standard thrust clearance:

Intake	0.050 – 0.100 mm (0.0024 – 0.0039 in.)
Exhaust	0.040 – 0.090 mm (0.0016 – 0.0035 in.)

Maximum thrust clearance:

Intake	0.13 mm (0.0051 in.)
Exhaust	0.12 mm (0.0047 in.)

Fig. 2-8

The Diagnostic Section (DI) - As indicated previously, the DI Section of the Repair Manual contains information about any system that has self-diagnostic capability. Each system in the DI Section is sub-divided into the following areas:

- HOW TO PROCEED WITH TROUBLESHOOTING
- CUSTOMER PROBLEM ANALYSIS CHECK
- PRE-CHECK
- DIAGNOSTIC TROUBLE CODE CHART
- PARTS LOCATION
- TERMINALS OF ECM
- PROBLEM SYMPTOMS TABLE
- CIRCUIT INSPECTION

How to Proceed With Troubleshooting - "How to Proceed with Troubleshooting" is a flow chart-type diagram sometimes referred to as a troubleshooting tree or logic tree.

This format is very useful when investigating or verifying a customer concern. It is organized and provides a logical process of actions, and decisions based upon the results of these actions. It serves as a road map of your investigative "plan of action" as well as a reflection (or snapshot) of those actions that have already been verified.

You will be using this type of "troubleshooting tree" during this course and it is recommended that you adopt some similar approach when investigating or verifying a customer complaint in your dealership. We will cover more detail on troubleshooting trees later.

Notice that the troubleshooting tree "How to Proceed with Troubleshooting" contains an additional piece of information that is unique to troubleshooting trees. It references a page number where a detailed procedure is found that will produce the action indicated. Thus, it serves a dual purpose, as a "Table of Contents" and a "troubleshooting tree."

Troubleshooting Flow Chart

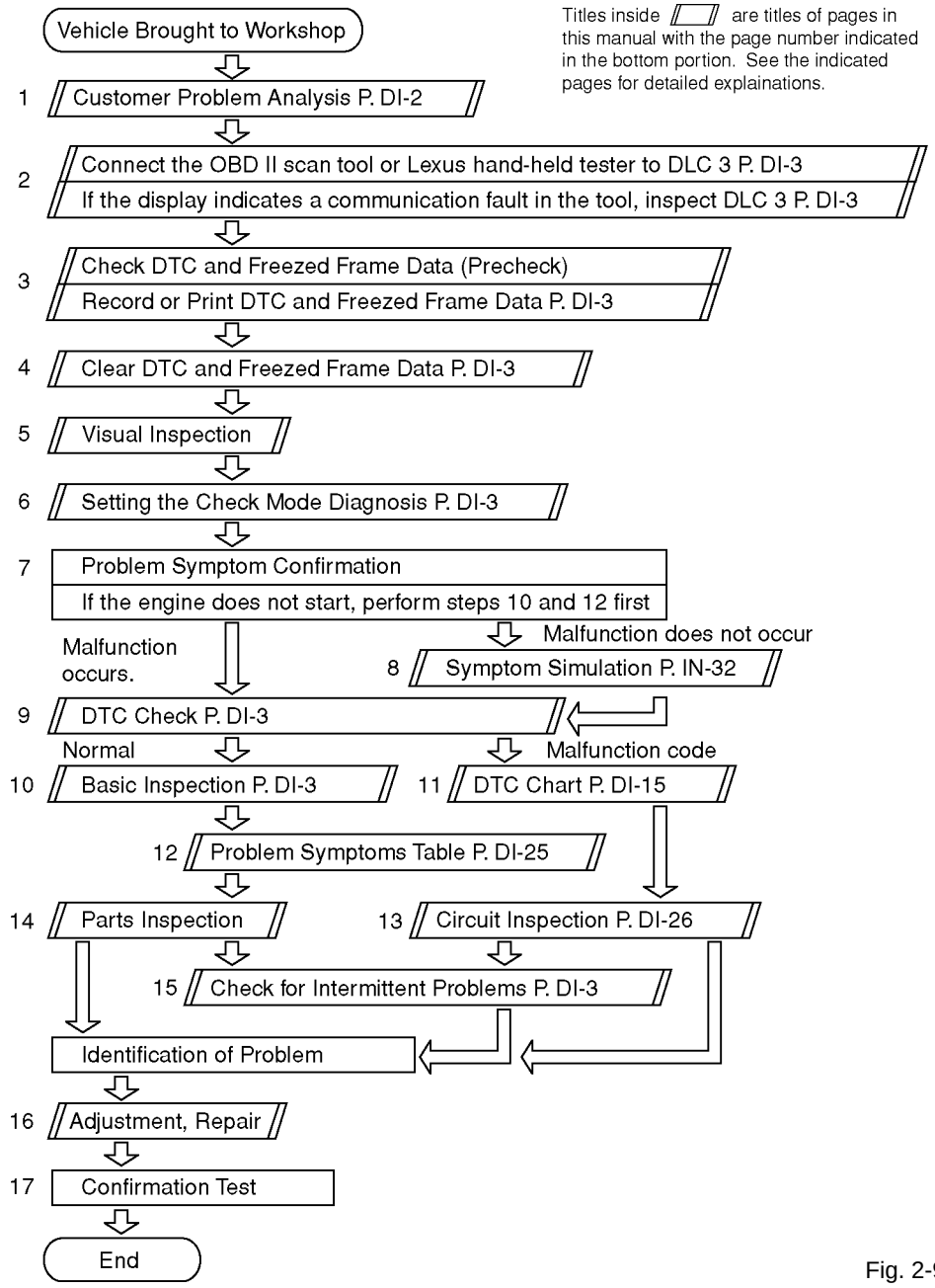

Fig. 2-9

Customer Problem Analysis Check - A system-specific customer problem-analysis "check list" is included for each self-diagnostic system listed in the DI Section of the Repair Manual. When complete, this document provides all of the necessary information required to properly verify a customer concern. The what, when, where, and who of the problem.

Pre-Check - The Pre-Check outlines the detailed procedures you will need to perform an analysis on each of the respective systems. It also contains valuable information about specific aspects of each system and the recommended procedure to follow when diagnosing the system.

Diagnostic Trouble Code Chart - The Diagnostic Trouble Code Chart is another extremely important diagnostic reference. This table is useful when a Diagnostic Trouble Code (DTC) is detected by the ECM. Since all systems included in the DI Section have self-diagnostic capability, the Diagnostic Trouble Code Chart contains the following information:

- The DTC displayed when the system detects a problem
- The system or circuit associated with that code
- The page number where the inspection procedure applicable to each system/circuit can be found
- The suspected trouble areas where the “root cause” of the problem is most likely originating
- An indication of malfunction indicator light (MIL) illumination when this problem is detected.

Troubleshooting ECU Controlled Systems

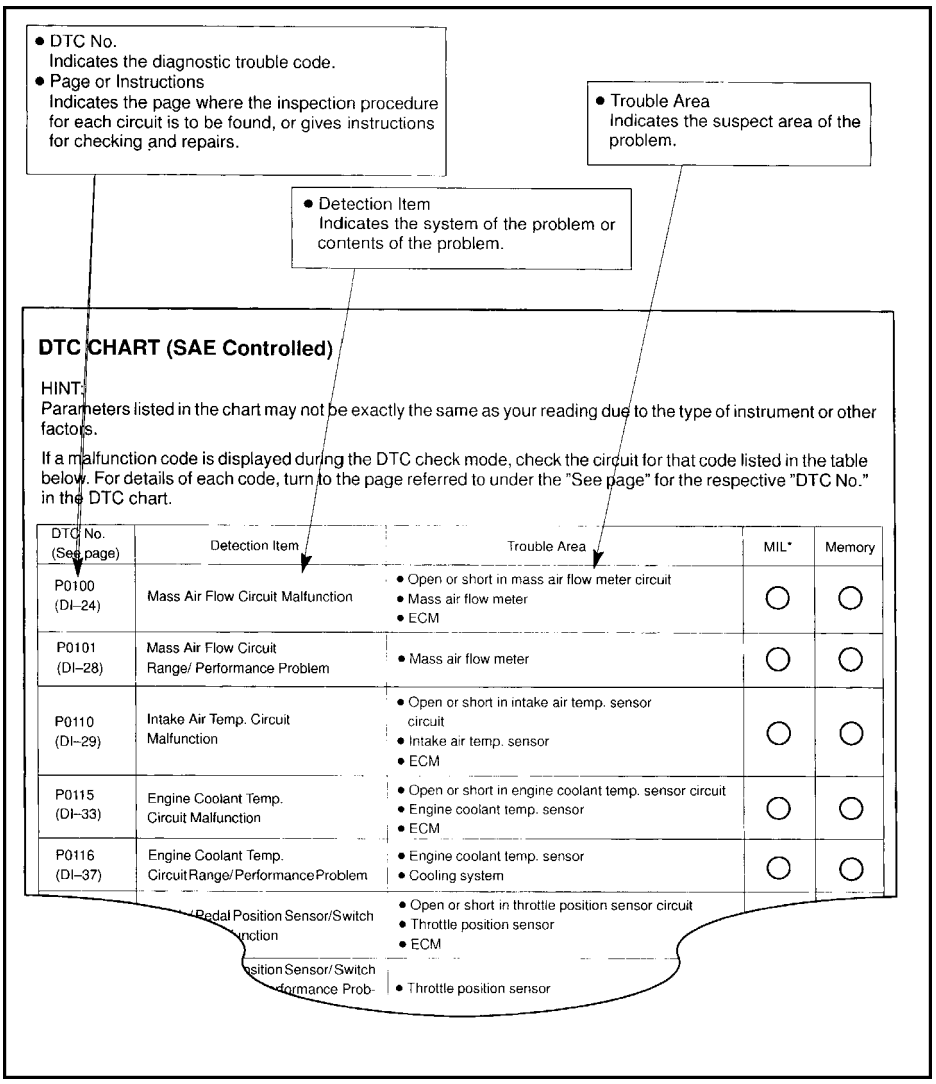

Fig. 2-10

Problem Symptoms Table - The Problem Symptoms Table is used when the problem is not detected by the diagnostic system, even though, the problem symptom is present. The problem could be occurring outside the detection range of the diagnostic system or the problem could be occurring in a system other than the diagnostic system. The Problem Symptoms Table contains the following information:

- the symptom
- the recommended circuit or component to check
- the page location where the circuit inspection flow chart can be found
- the hierarchical order for circuit checking

Troubleshooting ECU Controlled Systems

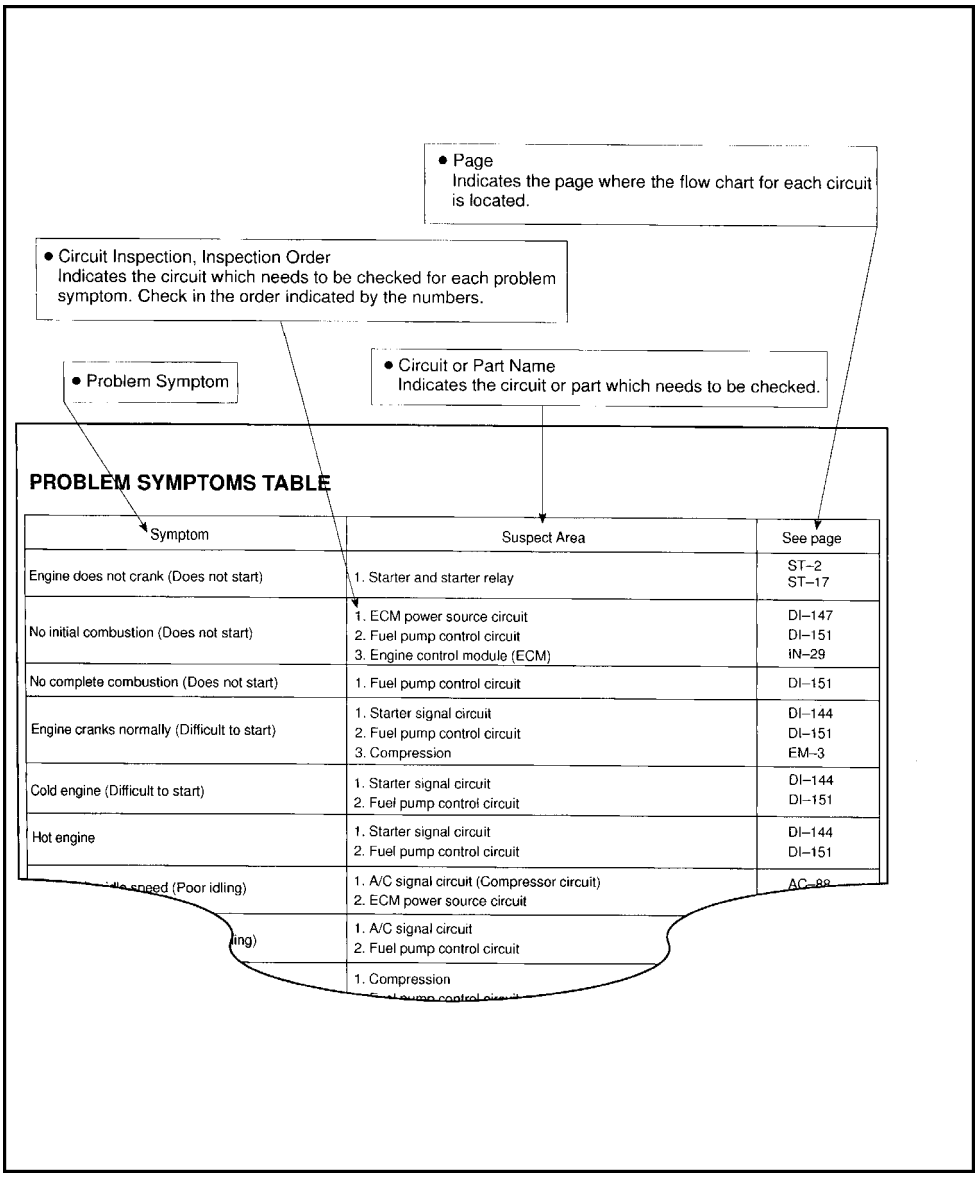

PROBLEM SYMPTOMS TABLE

Symptom	Suspect Area	See page
Engine does not crank (Does not start)	1. Starter and starter relay	ST–2 ST–17
No initial combustion (Does not start)	1. ECM power source circuit 2. Fuel pump control circuit 3. Engine control module (ECM)	DI–147 DI–151 IN–29
No complete combustion (Does not start)	1. Fuel pump control circuit	DI–151
Engine cranks normally (Difficult to start)	1. Starter signal circuit 2. Fuel pump control circuit 3. Compression	DI–144 DI–151 EM–3
Cold engine (Difficult to start)	1. Starter signal circuit 2. Fuel pump control circuit	DI–144 DI–151
Hot engine	1. Starter signal circuit 2. Fuel pump control circuit	DI–144 DI–151
[illegible] speed (Poor idling)	1. A/C signal circuit (Compressor circuit) 2. ECM power source circuit	AC–89
[illegible]ing)	1. A/C signal circuit 2. Fuel pump control circuit	[illegible]
[illegible]	1. Compression [illegible]	[illegible]

Fig. 2-11

Circuit Inspection - The Circuit Inspection section contains detailed information about the circuit. It provides:

- the DTC number and the detection item
- a circuit description outlining its operation and major component parts
- the criteria or parameter of detection for that code
- a wiring diagram for the circuit

Troubleshooting ECU Controlled Systems

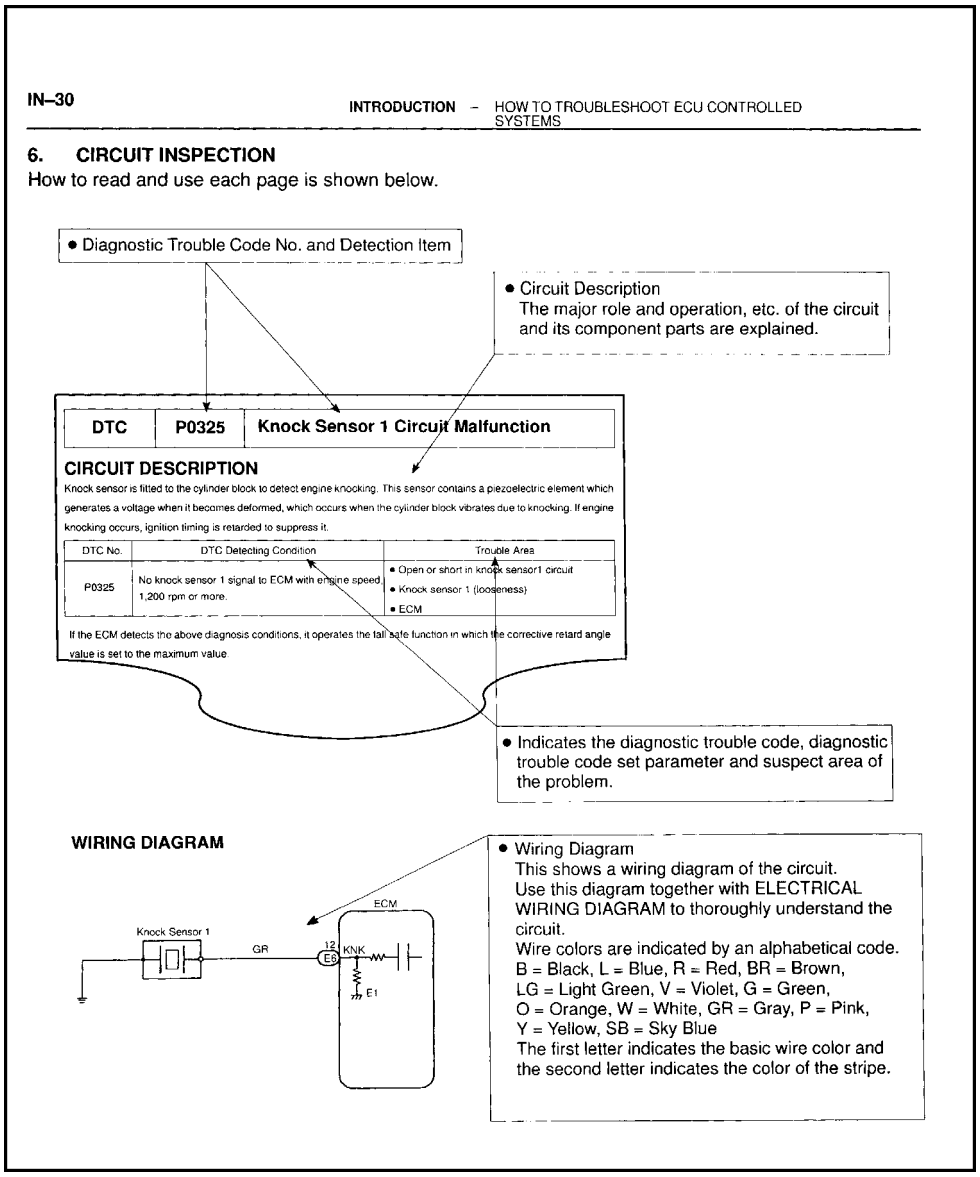

IN–30 INTRODUCTION – HOW TO TROUBLESHOOT ECU CONTROLLED SYSTEMS

6. CIRCUIT INSPECTION

How to read and use each page is shown below.

- Diagnostic Trouble Code No. and Detection Item
- Circuit Description
  The major role and operation, etc. of the circuit and its component parts are explained.

DTC	P0325	Knock Sensor 1 Circuit Malfunction

CIRCUIT DESCRIPTION

Knock sensor is fitted to the cylinder block to detect engine knocking. This sensor contains a piezoelectric element which generates a voltage when it becomes deformed, which occurs when the cylinder block vibrates due to knocking. If engine knocking occurs, ignition timing is retarded to suppress it.

DTC No.	DTC Detecting Condition	Trouble Area
P0325	No knock sensor 1 signal to ECM with engine speed 1,200 rpm or more.	• Open or short in knock sensor1 circuit • Knock sensor 1 (looseness) • ECM

If the ECM detects the above diagnosis conditions, it operates the fail safe function in which the corrective retard angle value is set to the maximum value.

- Indicates the diagnostic trouble code, diagnostic trouble code set parameter and suspect area of the problem.

WIRING DIAGRAM

- Wiring Diagram
  This shows a wiring diagram of the circuit.
  Use this diagram together with ELECTRICAL WIRING DIAGRAM to thoroughly understand the circuit.
  Wire colors are indicated by an alphabetical code.
  B = Black, L = Blue, R = Red, BR = Brown,
  LG = Light Green, V = Violet, G = Green,
  O = Orange, W = White, GR = Gray, P = Pink,
  Y = Yellow, SB = Sky Blue
  The first letter indicates the basic wire color and the second letter indicates the color of the stripe.

Fig. 2-12

Specifications - The Service Specification (SS) Section of the RM contains all of the service specifications for all systems of the vehicle. It also contains standard size and torque specifications information about fasteners such as bolts and nuts.

In some instances, a “standard” clearance or thickness is given. These “standard” measurements give the normal acceptable range when checking a particular component. (The standard clearance/thickness is usually followed by the out-of-specification maximum or minimum allowable clearance/thickness.)

Service Specifications— Engine Mechanical

Note that a Standard (normal) and a Maximum (out of spec) number is given. Be sure to follow the correct specification.

SS–7

SERVICE SPECIFICATIONS – ENGINE MECHANICAL

Cylinder block	Cylinder head surface warpage	Maximum	0.07 mm (0.0028 in.)
	Cylinder bore diameter	STD Mark 1	87.500 – 87.510 mm (3.4449 – 3.4453 in.)
		Mark 2	87.510 – 87.520 mm (3.4453 – 3.4457 in.)
		Mark 3	87.520 – 87.530 mm (3.4457 – 3.4461 in.)
		Maximum	87.73 mm (3.4539 in.)
	Main bearing cap bolt tension portion diameter		
		STD	7.500 – 7.600 mm (0.2953 – 0.2992 in.)
		Minimum	7.20 mm (0.2835 in.)
Piston and piston ring	Piston diameter	STD Mark 1	87.406 – 87.416 mm (3.4411 – 3.4416 in.)
		Mark 2	87.416 – 87.426 mm (3.4416 – 3.4420 in.)
		Mark 3	87.426 – 87.436 mm (3.4420 – 3.4424 in.)
	Piston oil clearance	STD	0.084 – 0.104 mm (0.0033 – 0.0041 in.)
		Maximum	0.124 mm (0.0049 in.)
	Piston ring groove clearance	No.1	0.020 – 0.070 mm (0.0008 – 0.0028 in.)
		No.2	0.010 – 0.050 mm (0.0004 – 0.0020 in.)
	Piston ring end gap	STD No.1	0.250 – 0.450 mm (0.0098 – 0.0177 in.)
		No.2	0.500 – 0.700 mm (0.0197 – 0.0276 in.)
		Oil	0.150 – 0.500 mm (0.0059 – 0.0197 in.)
		Maximum No.1	1.05 mm (0.0413 in.)
		No.2	1.30 mm (0.0512 in.)
		Oil	1.10 mm (0.0433 in.)
Connecting rod	Thrust clearance	STD	0.160 – 0.290 mm (0.0063 – 0.0138 in.)
		Maximum	0.35 mm (0.0138 in.)
	Connecting rod thickness		22.880 – 22.920 mm (0.9008 – 0.9024 in.)
	Connecting rod oil clearance	STD	0.027 – 0.053 mm (0.0011 – 0.0021 in.)
		Maximum	0.065 mm (0.0026 in.)
	Connecting rod bearing center wall thickness (Reference)	Mark 2	1.484 – 1.487 mm (0.0584 – 0.0585 in.)
		Mark 3	1.487 – 1.490 mm (0.0585 – 0.0587 in.)
		Mark 4	1.490 – 1.493 mm (0.0587 – 0.0588 in.)
		Mark 5	1.493 – 1.496 mm (0.0588 – 0.0589 in.)
		Mark 6	1.496 – 1.499 mm (0.0589 – 0.0590 in.)
		Mark 7	1.499 – 1.502 mm (0.0590 – 0.0591 in.)
	Rod bend	Maximum per 100 mm (3.94 in.)	0.05 mm (0.0020 in.)
	Rod twist	Maximum per 100 mm (3.94 in.)	0.15 mm (0.0059 in.)
	Bushing inside diameter		22.005 – 22.014 mm (0.8663 – 0.8667 in.)
	Piston pin diameter		21.997 – 22.006 mm (0.8660 – 0.8664 in.)
	Bushing oil clearance	STD	0.005 – 0.011 mm (0.0002 – 0.0004 in)
		Maximum	0.05 mm (0.0020 in.)
	Connecting rod bolt tension portion diameter	STD	7.200 – 7.300 mm (0.2835 – 0.2874 in.)
		Minimum	7.00 mm (0.2756 in.)
Crankshaft	Thrust clearance	STD	0.020 – 0.220 mm (0.0008 – 0.0087 in.)
		Maximum	0.30 mm (0.0118 in.)
	Thrust washer thickness		2.440 – 2.490 mm (0.0961 – 0.0980 in.)
	Main journal bore diameter on cylinder block (with main bearing)		66.986 – 67.000 mm (2.6372 – 2.6378 in.)
	Main journal oil clearance	STD No.1 and No.5	0.017 – 0.033 mm (0.0007 – 0.0013 in.)
		Others	0.029 – 0.045 mm (0.0011 – 0.0018 in.)
		Maximum No.1 and No.5	0.043 mm (0.0017 in.)
		Others	0.055 mm (0.0022 in.)
	Main journal diameter		66.988 – 67.000 mm (2.6373 – 2.6378 in.)

SS

Fig. 2-13

Repair Manual Hints

- On models such as the SC 300/400 or GS 300/400, where there are two different engines covered in the manual, there may be two sections named “EM” with separate page numbering for each. Verify that you are looking at the correct section by looking for the engine family name (such as 1UZ-FE or 2JZ-FE) at the top of the page.
- The AC section of the manual provides AC pressure readings in Kpa and in PSI.
- Some commonly used specifications are also found in the Maintenance (MA) section of the RM.

Electrical Wiring Diagrams

Lexus vehicles use several computers to operate systems ranging from the engine to the seats. These Electronic Control Modules or ECMs are an integral part of the sophisticated electrical system used in all Lexus vehicles.

When diagnosing an electrical problem, one of the best resources you can use is the Electrical Wiring Diagram manual or **EWD**.

The EWD is essentially the “bible” whenever you are tracking down an electrical problem. Unlike other manuals, the EWD does not provide step-by-step troubleshooting information. You must have a solid understanding of electrical circuit theory and troubleshooting techniques to use this manual. For systems with self-diagnostics, use the EWD in combination with the RM to help you locate specific components and connectors on the vehicle.

NOTE

Lexus Technical Training offers a complete electrical training program available at the Area Training Center. See your instructor for more information.

For this course, we will go over the EWD’s basic features, with an emphasis on the EWD’s sections, and its connector ID/location system.

Sections of the EWD

L PART NUMBER OF CONNECTORS

K POWER SOURCE (CURRENT FLOW)

J OVERALL ELECTRICAL WIRING DIAGRAM

I GROUND POINTS

H SYSTEM CIRCUITS

G ELECTRICAL WIRING DIAGRAMS

F RELAY LOCATIONS

E GLOSSARY OF TERMS

D ABBREVIATIONS

C TROUBLESHOOTING

B HOW TO USE THIS MANUAL

A INTRODUCTION

LS 400
ELECTRICAL WIRING DIAGRAM

	Section Code	Page
INTRODUCTION	A	2
HOW TO USE THIS MANUAL	B	3
TROUBLESHOOTING	C	10
ABBREVIATIONS	D	15
GLOSSARY OF TERMS AND SYMBOLS	E	16
RELAY LOCATIONS	F	18
ELECTRICAL WIRING ROUTING	G	30
SYSTEM CIRCUITS	H	53
GROUND POINTS	I	368
OVERALL ELECTRICAL WIRING DIAGRAM	J	376
POWER SOURCE (Current Flow Chart)	K	
PART NUMBER OF CONNECTORS	L	

©2000 TOYOTA MOTOR CORPORATION
All rights reserved. This book may not be reproduced or copied, in whole or in part, without the written permission of Toyota Motor Corporation.

Fig. 2-14

How to Use The EWD Sections

Each of the twelve sections has a specific use for which it is best suited. If you are new to Lexus-style wiring diagrams, you'll find good "how-to" instructions in the following sections:

- **Section A - Introduction:** This is where you will find the table of contents. Although the arrangement of each model's EWD is about the same, "thumbing" through the book to find the information you need can be time consuming. It's easier to look it up!
- **Section B - How to Use this Manual:** With a sample system circuit diagram page, many of the EWD's features are clearly explained.
- **Section C - Troubleshooting:** This section outlines basic troubleshooting procedures for opens, shorts, and high resistance problems. You will also find connector and terminal removal procedure.
- **Section D - Abbreviations:** A brief list of the abbreviations found within the System Circuit Diagrams is provided.
- **Section E - Glossary of Terms and Symbols:** Defines each of the schematic symbols used on the diagrams.
- **Section F - Relay Locations:** Shows all relay, ECM, fuse and fusible link locations in the vehicle.
- **Section G - Electrical Wire Routing:** Shows all harness connector locations, and wire harnesses.
- **Section H - System Circuits:** The System Circuit Diagrams are the heart of the EWD. These full color diagrams graphically display a large amount of information about the circuit. Note each circuit is shown individually, and not on a "map" of the entire electrical system.

Reference Information in the EWD

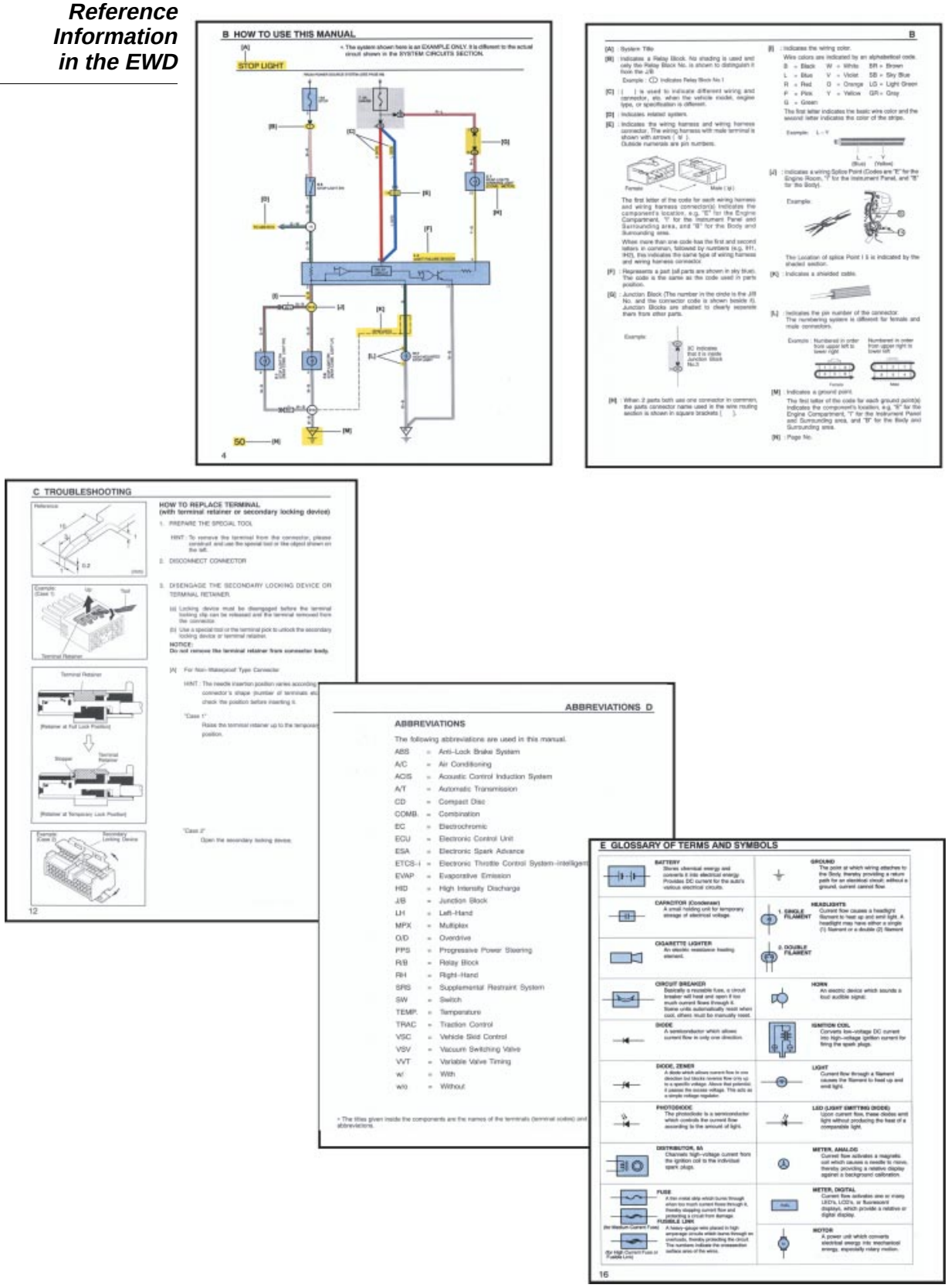

Fig. 2-15

Wire Colors - Wire colors are also identified by letters. When the diagram has a wire listed as “R-L,” the wire is red with a blue stripe. (“L” stands for blue; “B” is for black.)

Junction Blocks - J/Bs are key distribution points for the electrical system, housing many of the fuses and relays used in the vehicle. J/Bs are denoted by a shaded area on the diagram. You will also see an ID letter or number in an oval. This is used with the location tables that follow the diagram.

Component/Connector ID - Next to each component’s name is a component ID number. Like the Junction Block, the ID number is used to reference additional information about the component:

- Description of its location
- A picture of where it is located on the vehicle
- A front view of the connector so that you can determine pin locations

Splice ID - Splices are also identified on the Circuit Diagram. This information can help you to identify other circuits that share common wires, and can also help you locate the splice within the vehicle harness.

Additional Support Information

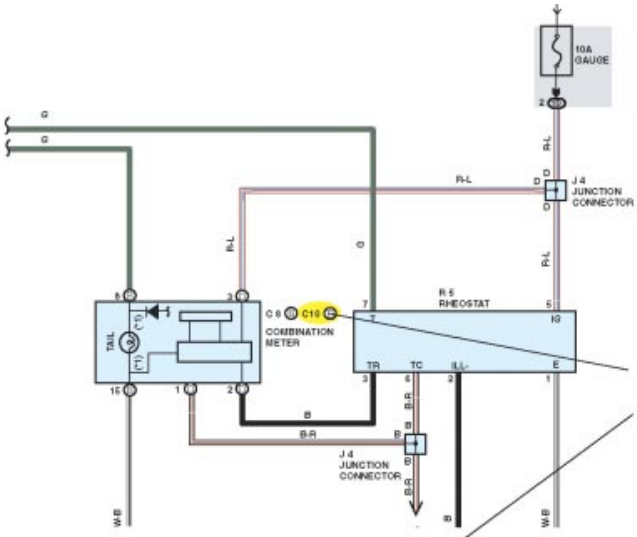

Connector ID number from Wiring Diagram. ID number directs you to the page number for location diagram.

Service Hints provide voltages and resistance specs

SERVICE HINTS

S10 STOP LIGHT SW

2–1 : Closed with the brake pedal depressed

L4 LIGHT FAILURE SENSOR

1, 2, 7–GROUND : Approx. **12** volts with the stop light SW on
4, 8–GROUND : Approx. **12** volts with the ignition SW at **ON** position
11–GROUND : Always continuity

: PARTS LOCATION

Code		See Page	Code	See Page	Code	See Page
C7	A	28	J4	29	R6	31
C10	D	28	J37	30	R8	31
H11		30	L4	30	S10	29

: JUNCTION BLOCK AND WIRE HARNESS CONNECTOR

Code	See Page	Junction Block and Wire Harness (Connector Location)
1C	24	Cowl Wire and Instrument Panel J/B (Lower Finish Panel)
1D	24	Instrument Panel Wire and Instrument Panel J/B (Lower Finish Panel)
1R	24	Cowl Wire and Instrument Panel J/B (Lower Finish Panel)
1S	24	Floor Wire and Instrument Panel J/B (Lower Finish Panel)

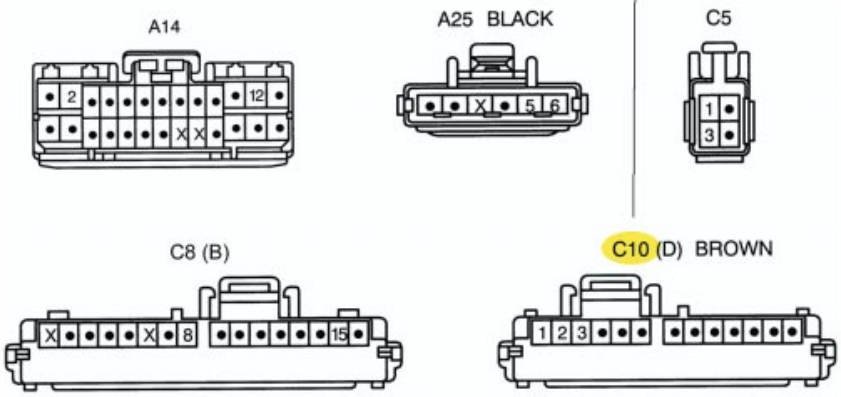

Fig. 2-16

System Circuit Diagram

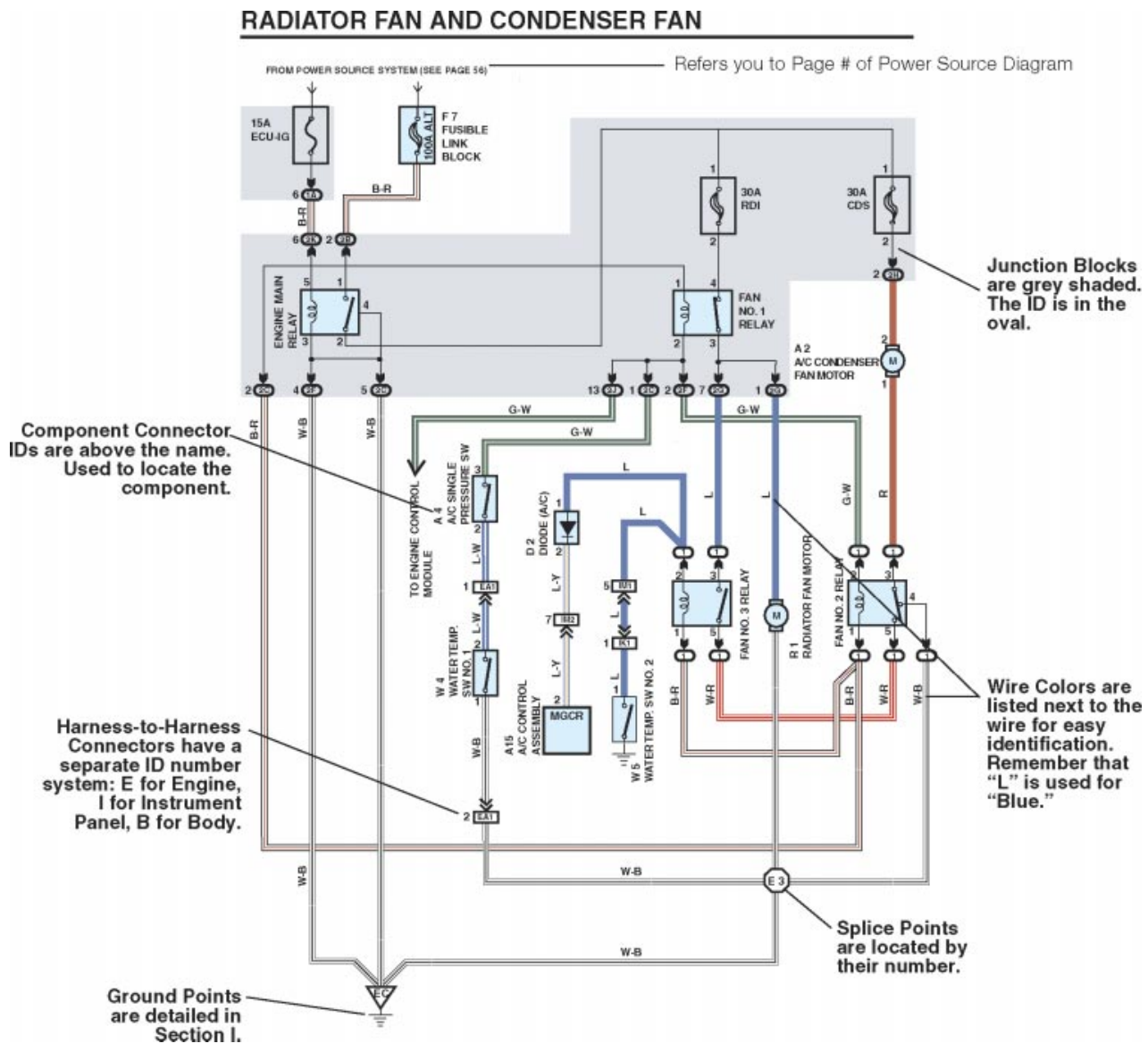

Fig. 2-17

Using the ID System to Locate Components on the Vehicle

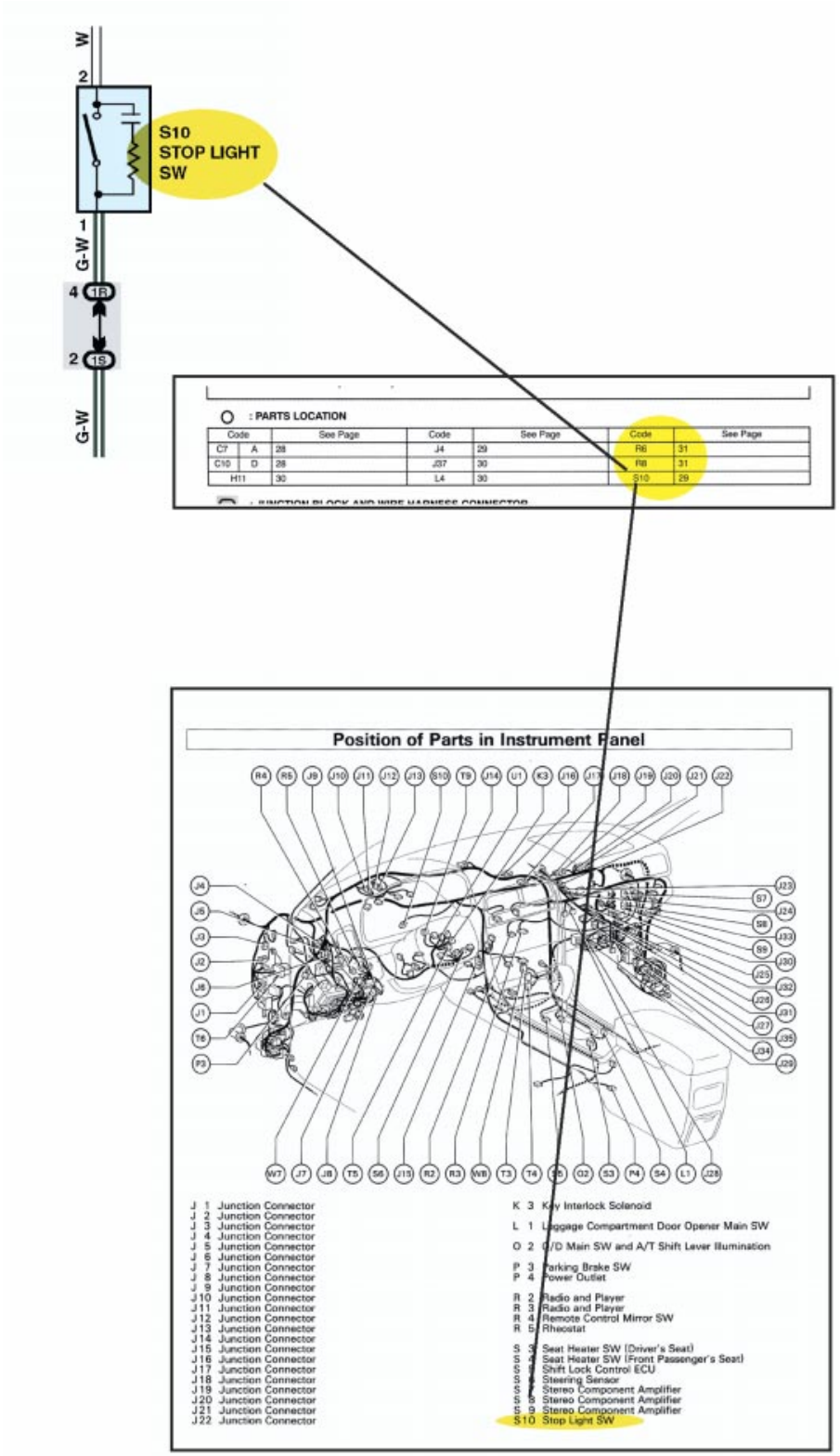

Fig. 2-18

Additional Items

When diagnosing a problem that affects more than one circuit or when you want to verify a circuit's power or ground by checking a related circuit, you will need to look at the Power and Ground distributions.

- **Section I - Ground Distribution -**Most circuits on Lexus vehicles have ground circuits that are either redundant (use more than one grounding point) or are shared with other systems. To find these shared ground points, look at Section I of the EWD. In it you'll find all splice, junction block, and ground point connections.
- **Section J - Overall Electrical Wiring Diagram -** These "System Diagrams" provide an overview of the entire system including the power source diagram. They are very useful when a more global view of a circuit is required.
- **Section K - Power Distribution** - Section K of the EWD contains a "tree" diagram of the power distribution to each fuse and a matrix that shows which fuse provides B+ to each electrical component. The electrical components are listed by their component ID number in alphabetical order. This information can also be seen with the appropriate wire colors through the Power Source circuit diagram in the beginning of Section H.
- **Section L** - Part Number of Connectors.

Section I - Ground Points

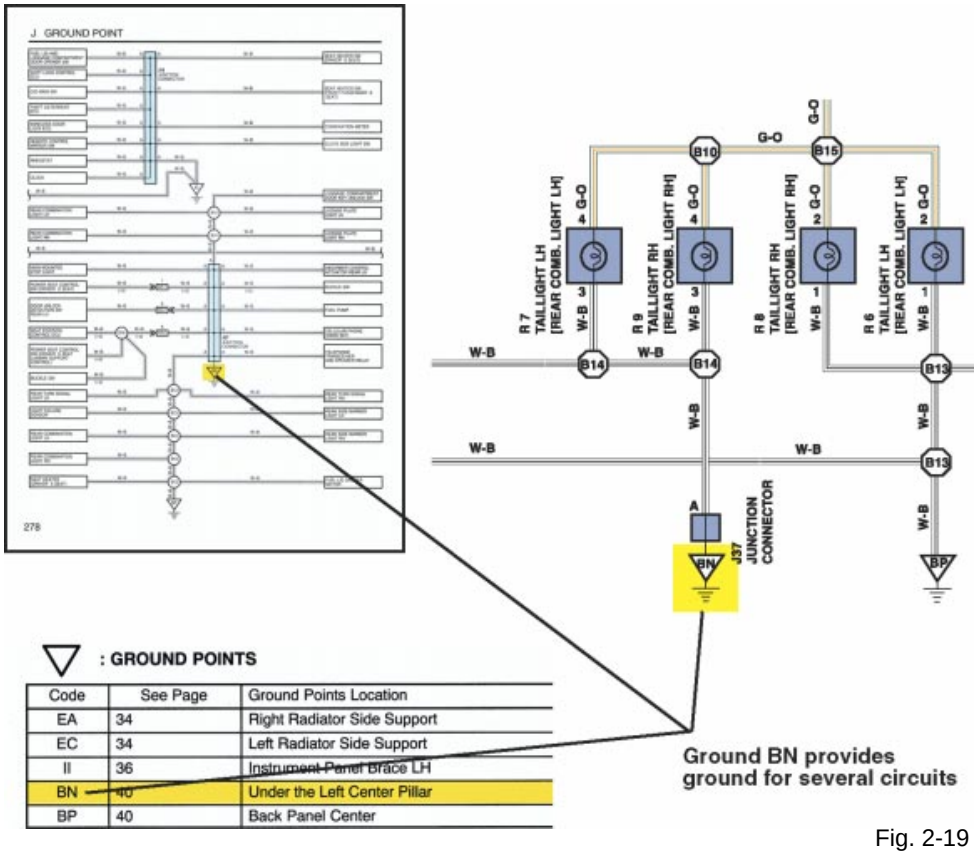

Fig. 2-19

Power Source Chart

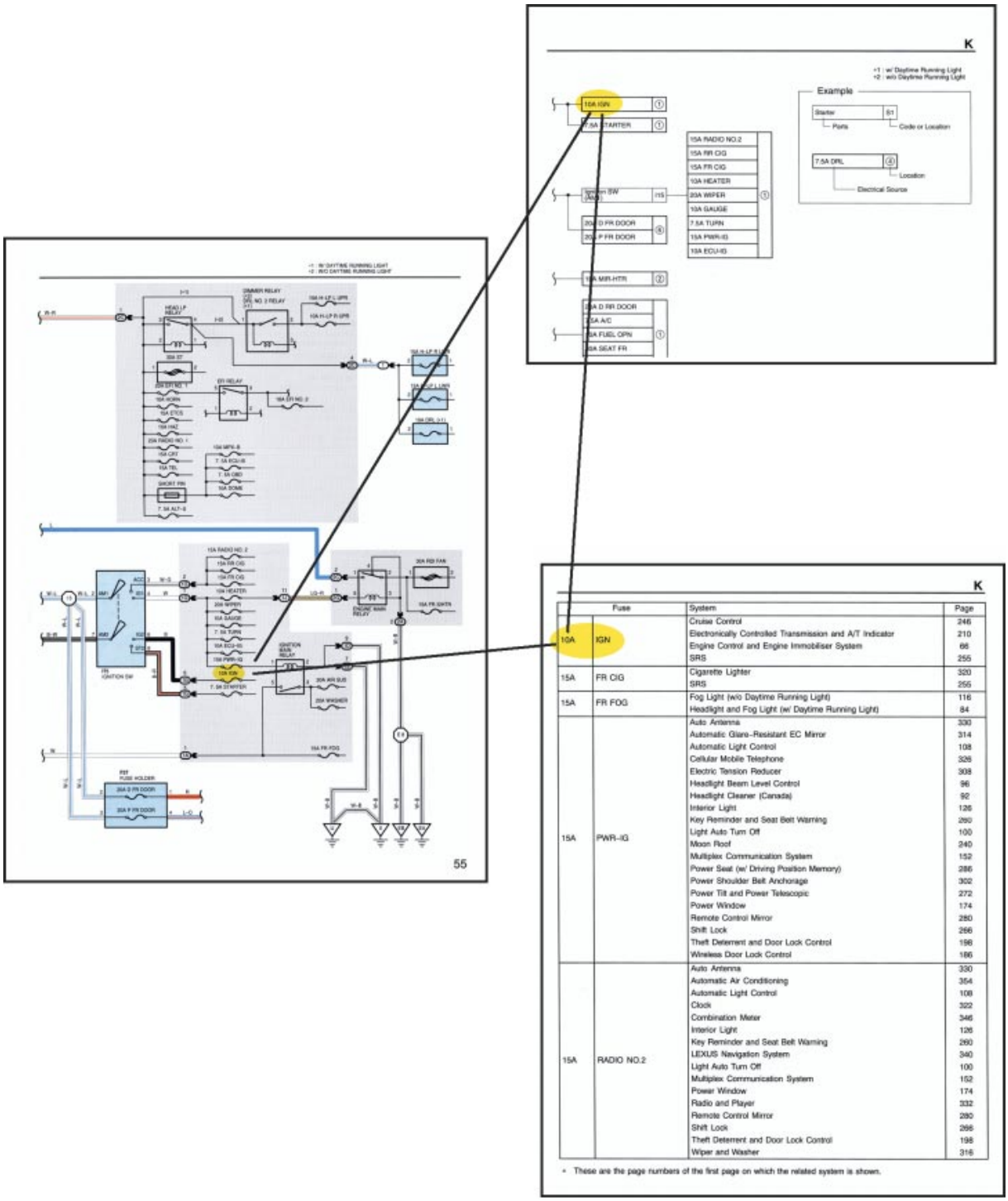

Fig. 2-20

Hints on Using the EWD

- Remember that the EWD does not give you any diagnostic procedures, just information. You need strong electrical knowledge in order to use this manual.
- Whenever you have an electrical problem, be sure to carefully operate the circuit, looking for additional items not mentioned by the customer. Looking for these *related symptoms* will help you eliminate areas that will require your inspection. Also give consideration to parts of the circuit that are working. This can help eliminate "chasing" a problem in areas of the circuit that are already "proven OK" by the operation of that part of the circuit.
- When troubleshooting a circuit, make a photocopy of the wiring dia-gram or obtain a print-out of the wiring diagram from the Technical Information System (TIS) and use a highlighter to trace the path of current flow (top to bottom) of the parts of the circuit that are working. This will help you to visualize the areas that need to be inspected.
- Use the component location information to plan your checks. Look at the easiest to get to items first, if you have no prior experience with the condition.

Lexus New Car Features Manual

At the beginning of each model year, or whenever a new model is introduced, a New Car Features (NCF) is also released. The purpose of these books is to:

- **Provide information on any year to year model changes** Each change on the vehicle is summarized in the following categories:
  - **Engine**
  - **Chassis**
  - **Body**
  - **Body Electrical**
- **Provide information on how each system on the vehicle works** -This information cannot be found anywhere else! While the RM gives you useful information on how to troubleshoot most problems, *some* problems can still be difficult to track down.

Most ECU controlled systems employ many *logical* functions; that is, the computer actually checks for certain conditions before turning certain electrical components OFF or ON. For example, the Power Door Lock function has a *key confine prevention* function. If any of the front doors are open and someone tries to lock one of these doors, the ECU checks the *key unlock warning switch* to see if the key is the ignition. If it is, door(s) will unlock automatically. By using this logic, the ECU helps to prevent the driver from locking the keys in the car. **The NCF is the only manual that contains clear explanations of the various ECU strategies.**

Additional Uses of The NCF

- **Explanation for the Customer** - Lexus Customers are generally more interested in how systems work, and like to have thorough explanations from their Service Technicians. The information in the NCF will give you everything you will need to explain a system's operation to the customer.
- **Easy Reference for Specifications -**In the Model Outline section and in the appendix at the back, specification tables (such as engine horsepower and torque curve, size of brakes, and others) can be found. This information is "nice to know" for you as a technician, but can be very helpful when answering customer inquiries.

New Car Features Manual

18 ES300 — NEW FEATURES

9. Engine Control System

General

The VVT-i and 3-stage ACIS systems have been added to the engine control system and the EGR control has been discontinued.
The engine control system of the 1MZ-FE engine in the '99 ES300 and '98 ES300 are compared below.

System	Outline	'99 ES300	'98 ES300
SFI (Sequential Multiport Fuel Injection)	An L-type SFI system directly detects the intake air mass with a hot wire type mass air flow meter.	○	○
	The fuel injection system is a sequential multi-port fuel injection system.	○	○
ESA (Electronic Spark Advance)	Ignition timing is determined by the ECM based on signals from various sensors. The ECM corrects ignition timing in response to engine knocking.	○	○
	2 knock sensors are used to improve knock detection.	○	○
	Torque control correction during gear shifting has been used to minimize the shift shock.	○	○
IAC (Idle Air Control)	A rotary solenoid type IAC valve controls the fast idle and idle speeds.	○	○
VVT-i	Controls the intake camshaft to an optimal valve		

ES300 — NEW FEATURES 23

Main Components of Engine Control System

1) General

The following table compares the main components of the 1MZ-FE engine in the '99 ES300 and '98 ES300.

Components \ 1MZ-FE Engine	'99 ES300	'98 ES300
Mass Air Flow Meter	Hot-Wire Type	←
Crankshaft Position Sensor	Pick-Up Coil Type, 1	←
Camshaft Position Sensor	—	Pick-Up Coil Type, 1
VVT Sensor	Pick-Up Coil Type, 2	—
Throttle Position Sensor	Linear Type, 1	←
Knock Sensor	Built-In Piezoelectric Type, 2	←
Oxygen Sensor	Air Fuel Ratio Sensor (Bank 1, Sensor 1) (Bank 2, Sensor 1) Heated Oxygen Sensor (Bank 1, Sensor 2)	Air Fuel Ratio Sensor (Bank 1, Sensor 1)*1 (Bank 2, Sensor 1)*1 Heated Oxygen Sensor (Bank 1, Sensor 1)*2 (Bank 2, Sensor 1)*2 (Bank 1, Sensor 2)
Injector	4-Hole Type with Air Assist	←
IAC Valve	Rotary Solenoid Type (Built-in Driver)	Rotary Solenoid Type

*1: Only for California Specification Model
*2: Except California Specification Model

2) Mass Air Flow Meter

As in the '98 model, the plug-in type has been adopted. However, an even more compact mass air flow meter has been adopted in the '99 model.

24 ES300 — NEW FEATURES

3) VVT Sensor

A VVT sensor is mounted on the intake side of each cylinder head. To detect the camshaft position, a timing rotor that is provided on the VVT-i controller is used to generate 3 pulses for every 2 revolutions of the crankshaft.

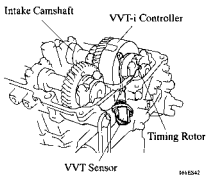

4) IAC Valve

A rotary solenoid type IAC valve is used to control the idle speed as on the '98 ES300. However, IAC valve of '99 ES300 has a built-in driver.

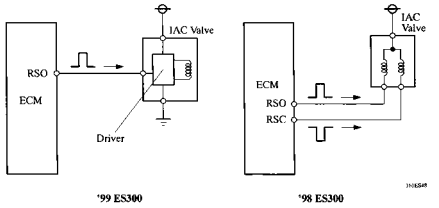

Fig. 2-21

Additional Lexus Resources

With Customer satisfaction and “fixing it right the first time” our objectives, there are additional resources that are available to every Lexus Dealer:

- **Technical Service Information Bulletins (TSIB) -** These service bulletins are released to keep you up-to-date on the latest Repair Manual updates, problems, and “fixes”. Be sure to reference your shop’s binder on a regular basis. TSIBs are easily available on-line through TIS.

Technical Service Information Bulletin (TSIB)

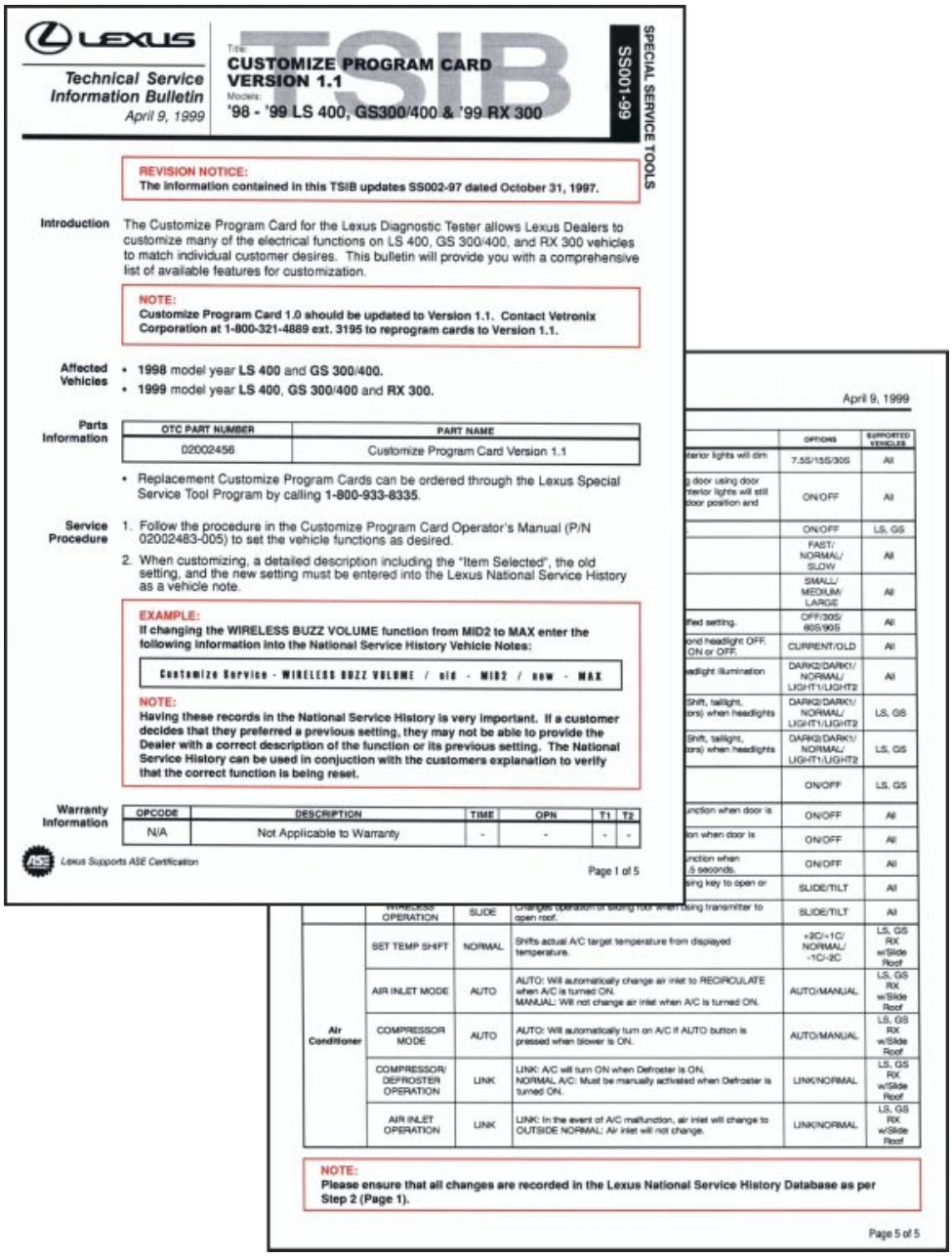

LEXUS

Technical Service Information Bulletin
April 9, 1999

Title: **CUSTOMIZE PROGRAM CARD VERSION 1.1**
Models: **'98 - '99 LS 400, GS300/400 & '99 RX 300**

TSIB

SS001-99

SPECIAL SERVICE TOOLS

REVISION NOTICE:
The information contained in this TSIB updates SS002-97 dated October 31, 1997.

Introduction The Customize Program Card for the Lexus Diagnostic Tester allows Lexus Dealers to customize many of the electrical functions on LS 400, GS 300/400, and RX 300 vehicles to match individual customer desires. This bulletin will provide you with a comprehensive list of available features for customization.

NOTE:
Customize Program Card 1.0 should be updated to Version 1.1. Contact Vetronix Corporation at 1-800-321-4889 ext. 3195 to reprogram cards to Version 1.1.

Affected Vehicles
- **1998** model year **LS 400** and **GS 300/400.**
- **1999** model year **LS 400**, **GS 300/400** and **RX 300.**

Parts Information

OTC PART NUMBER	PART NAME
02002456	Customize Program Card Version 1.1

- Replacement Customize Program Cards can be ordered through the Lexus Special Service Tool Program by calling **1-800-933-8335**.

Service Procedure
1. Follow the procedure in the Customize Program Card Operator’s Manual (P/N 02002483-005) to set the vehicle functions as desired.
2. When customizing, a detailed description including the “Item Selected”, the old setting, and the new setting must be entered into the Lexus National Service History as a vehicle note.

EXAMPLE:
If changing the WIRELESS BUZZ VOLUME function from MID2 to MAX enter the following information into the National Service History Vehicle Notes:

Customize Service - WIRELESS BUZZ VOLUME / old - MID2 / new - MAX

NOTE:
Having these records in the National Service History is very important. If a customer decides that they preferred a previous setting, they may not be able to provide the Dealer with a correct description of the function or its previous setting. The National Service History can be used in conjuction with the customers explanation to verify that the correct function is being reset.

Warranty Information

OPCODE	DESCRIPTION	TIME	OPN	T1	T2
N/A	Not Applicable to Warranty	-	-	-	-

Lexus Supports ASE Certification

Page 1 of 5

April 9, 1999

	OPTIONS	SUPPORTED VEHICLES
...terior lights will dim	7.5S/15S/30S	All
...g door using door ...terior lights will still ...door position and	ON/OFF	All
	ON/OFF	LS, GS
	FAST/ NORMAL/ SLOW	All
	SMALL/ MEDIUM/ LARGE	All
...fied setting.	OFF/30S/ 60S/90S	All
...ond headlight OFF. ...ON or OFF.	CURRENT/OLD	All
...adlight illumination	DARK2/DARK1/ NORMAL/ LIGHT1/LIGHT2	All
...Shift, taillight, ...tors) when headlights	DARK2/DARK1/ NORMAL/ LIGHT1/LIGHT2	LS, GS
...Shift, taillight, ...tors) when headlights	DARK2/DARK1/ NORMAL/ LIGHT1/LIGHT2	LS, GS
	ON/OFF	LS, GS
...unction when door is	ON/OFF	All
...ion when door is	ON/OFF	All
...unction when ...5 seconds.	ON/OFF	All
...sing key to open or	SLIDE/TILT	All
WIRELESS OPERATION	SLIDE	Changes operation of sliding roof when using transmitter to open roof.	SLIDE/TILT	All
Air Conditioner	SET TEMP SHIFT	NORMAL	Shifts actual A/C target temperature from displayed temperature.	+2C/+1C/ NORMAL/ -1C/-2C	LS, GS RX w/Slide Roof
	AIR INLET MODE	AUTO	AUTO: Will automatically change air inlet to RECIRCULATE when A/C is turned ON. MANUAL: Will not change air inlet when A/C is turned ON.	AUTO/MANUAL	LS, GS RX w/Slide Roof
	COMPRESSOR MODE	AUTO	AUTO: Will automatically turn on A/C if AUTO button is pressed when blower is ON.	AUTO/MANUAL	LS, GS RX w/Slide Roof
	COMPRESSOR/ DEFROSTER OPERATION	LINK	LINK: A/C will turn ON when Defroster is ON. NORMAL A/C: Must be manually activated when Defroster is turned ON.	LINK/NORMAL	LS, GS RX w/Slide Roof
	AIR INLET OPERATION	LINK	LINK: In the event of A/C malfunction, air inlet will change to OUTSIDE NORMAL: Air inlet will not change.	LINK/NORMAL	LS, GS RX w/Slide Roof

NOTE:
Please ensure that all changes are recorded in the Lexus National Service History Database as per Step 2 (Page 1).

Page 5 of 5

Fig. 2-22

- **Electronic Parts Catalog -** The parts catalog is also accessible through your TDN terminal. At each Lexus Dealer, a Parts CD-ROM is available to allow you to find part numbers by typing the name or component group. This provides a fast searching capability that can't be done with microfiche.
- **Special Service Tools Catalog -** As mentioned earlier, the Special Service Tool (SST) catalog contains pictures and part numbers of all SSTs referenced in the Repair Manual. SSTs are listed by part number in ascending *order*. Each of the tools is identified as *essential, available*, or *special order*. All essential tools are listed in red ink. The SST program is a joint effort between Lexus and the OTC division of SPX Corporation.

Special Service Tools Catalog

Fig. 2-23

Lexus Technical Support

Besides the printed and electronic materials, Lexus also provides its Technicians and Diagnostic Specialists with an unprecedented amount of human resources for technical support:

- **Area Office Resources -** In each Area Office, there are a group of District Technical Managers to assist you when diagnosing customer concerns. The Area Offices also have a direct link to TMC through their Field Technical Engineers. These resources are simply a phone call away. In addition, each Area Office conducts periodic District-wide Diagnostic Specialist Meetings. These meetings with the Area Office Staff allow your dealer's Diagnostic Specialist to stay up-to-date with the latest product concerns and current field "fixes."
- **Technical Assistance System "Hotline" -** Via the 800 number, you can talk directly to a Lexus Product Engineer concerning any technical question. Each Product Engineer is an ASE Certified Master Technician, and specializes in a particular system on the vehicle. With their extensive product knowledge, technical database, extensive hands-on experience, and direct access to TMS and TMC Engineers, they can help you trouble shoot the hard-to-diagnose problems.

Using the Technical Assistance System Hotline

Fixing the vehicle fast and fixing it right the first time are the keys to satisfying the Lexus Customer's service needs. Lexus strongly recommends that you use the Technical Assistance System "Hotline" (TAS) (800) 4464740. You'll know when to call by following *"the 20-minute rule."* If you are working on a problem for 20 minutes and "hit the wall" and you do not know what to check next, call the Hotline to get help.

When You Call the TAS Hotline

Before calling the TAS Hotline be sure to have the following information ready:

- VIN and Production Date
- Customer's description of the symptoms
- Your VERIFIED description of the symptoms
- What inspections you have made and what you have found
- If there were adjustments or clearance checks, have the measurements that you found or made
- Have the vehicle readily available
- Have the RM, EWD, pen and paper handy. Be sure to write down the TAS case number given to you by the Product Engineer

By having these items when you call, the TAS Product Engineer can work with you to troubleshoot the system as quickly as possible.

TAS Cases

With each phone call, the Product Engineer opens a TAS case and will give you a case number. This case number allows the Engineer to reference your information easily. After successfully repairing the vehicle, please call the Hotline to close the case. The information from your vehicle's condition and successful repair will then be entered into a national database, which can be accessed by other technicians through TAS. This database is also carefully watched for product issues and trends that may require Quality Assurance investigation and/or an Electronic Product Report to TMC.

Using the TAS Hotline

- VIN and Production Date
- Customer's description of the symptoms
- Your VERIFIED description of the symptoms
- What inspections you have made and what you found
- If there were adjustments or clearance checks, have the measurements that you found or made
- Have the vehicle readily available
- Have the RM, EWD, pen and paper handy. Be sure to write down the TAS case number given to you by the Product Engineer
- Don't forget to close the case

Fig. 2-24

Lexus Technical Information System (TIS)

The Technical Information System is an on-line reference available to you in your dealership. At this time, you can access any information from the RM, OM, EWD, NCF, Special Service Campaign Bulletins, and TISBs, as well as Warranty Information, Warranty Bulletins, and Diagnostic Tester Updates. More and more documents, service references, and other features will be added to this system as time goes on.

The key to referencing on-line is to have a thorough knowledge of the organization of each of the aforementioned references. This familiarity will assist you to quickly access the information you are researching.

TIS is equipped with a printer so that you can obtain a print-out of any of the on-line materials for use when troubleshooting. Unlike hard copy volumes of the service literature, you may highlight the print-out, make notes on it, and/or retain it for future reference.

Technical Information System (TIS)

Fig. 2-25

WORKSHEET 2-0
ASSIGNMENT 1
Presentation Research & Development

Vehicle	Year/Prod. Date	Engine	Transmission

Required Tools:

- LS 400 vehicle equipped with:
  Wireless remote HomeLink®
  Driving Position Memory System
- ES 300 Vehicle and simulator (AVC-LAN)
- TIS Hardware with printer
- Fender covers, seat covers, floor mats
- Hand Tools & Shop Towels
- SST 0908200700 Airbag Deployment Tool
- Garage Door Opener with rolling code feature
- HomeLink® Transmitter/Transceiver
- 1999 LS 400 Repair Manual
- 1999 LS 400 Owner's Manual
- 1999 RX 300 EWD
- 1999 NCF
- Vehicle equipped with AVC-LAN (Pioneer made Audio)

Assignment 1 will require you to research and develop a presentation on a predetermined system and then deliver the information to your colleagues. It is important that the presentation is detailed, complete, and accurate as the information provided will be used in subsequent PDS exercises by both you and your colleagues. Inaccurate references and/or incomplete information will cause confusion and delay that may inhibit completion of the exercise.

Training Objectives: To provide for development and relevant practice of the communication skills necessary to effectively impart information within the dealership (to colleagues, Service Manager, Technical Assistance Hotline, and to interact effectively with the Lexus customer). To provide relevant practice and skill verification in regard to:

- the use of technical resources available in the dealership
- the use of the Technical Information System (TIS)

Technician Objective: This exercise will assist you to develop the communication skills necessary to effectively impart information within the dealership (to colleagues, Service Manager, Technical Assistance Hotline, and to interact effectively with the Lexus customer).

You will also be provided with the opportunity to practice using the service literature available in your dealership in hard-copy format as well as on-line using TIS.

The systems that will be addressed are listed below:

- Multi-function Wireless Remote Control Key System
- Theft Deterrent System
- Power Window and Door Lock Systems
- Power Seat System
- Audio System
- A/C System
- HomeLink® Universal Transmitter
- Airbags and Seat Restraint Systems

1. The attached worksheets will assist you to develop your presentation.

    a. Use the Owner's Manual and Repair Manual portions of the worksheet while researching the system assigned to you. Listed at the end of the Repair Manual section, is the demonstration that you are assigned to deliver.

    b. Your instructor will assign a day when you will deliver a short 15 or 20 minute presentation (on-vehicle) to your colleagues. Your presentation will provide them with the information you have researched from the Owner's Manual and Repair Manual.

Additionally, you will conduct a demonstration during the presentation. The subject for your demonstration is indicated at the end of Part 2 "The Repair Manual" on your worksheet.

    c. Use the other worksheets in the packet to reference notes when your colleagues deliver their presentations to you.

    d. Retain these worksheets for application later. As indicated, be as complete and accurate as possible, it will save you time later.

2. The EWD portion of the worksheet is designed to verify your skills reading electrical wiring diagrams and using the EWD. After you are familiar with the EWD, you will access the EWD on-line using the Technical Information System (TIS), print a wiring diagram to work from, and research the system assigned to you.

If you have any questions or concerns about this assignment approach your instructor for direction.

WORKSHEET 2-1
ASSIGNMENT 1
Multi-Function Wireless Remote Control Key System

Vehicle	Year/Prod. Date	Engine	Transmission

Part 1: The Owner's Manual

The Owner's Manual provides one of the most comprehensive references for system operation available to you in your dealership. You should use it to gain an understanding of how each system should properly operate.

Reference the Owner's Manual of the vehicle assigned to you and locate information on the wireless remote control. The information researched to answer these questions should be integrated into your presentation while demonstrating the system to your colleagues.

1. How did you locate this information?
   __ Using the Table of Contents
   __ Using the Index
   __ Other (indicate how) _____

2. In what section of the Owner's Manual did you find the wireless remote control information?

   a. Section Number = _____

   b. Title of Section = _____

   c. Subsection Name = _____

3. What features can you operate with the Wireless Remote Control?
   __ Locking the doors
   __ Sounding an alarm
   __ Unlocking the doors
   __ Unlocking the trunk lid
   __ Operating the windows & moon roof

4. How many wireless remotes can you have for this vehicle? _____

5. What would indicate discharge of the battery in the key? (list three)

   a. _____

   b. _____

   c. _____

6. When replacing the battery:

   a. What specification for the replacement battery?

   _____

   b. Which side of the battery should face up?

   Positive side _____ Negative side _____

7. If one of the doors is not closed when the “Lock” button on the remote is depressed a buzzer sounds for 10 seconds. How do you stop the buzzer?

   _____

   _____

8. Will the remote operate with the key in the ignition switch?

   YES _____ NO _____

9. Does the “PANIC” alarm function operate when the ignition key is in the “ON” position?

   YES _____ NO _____

10. What is the operational range of the wireless remote? _____

Part 2: Repair Manual

The Repair Manual is a valuable source of diagnostic information. Finding the information in the Repair Manual is made easy if you know how this resource is organized.

11. Using the Repair Manual, find the section that describes the location of the Engine Serial Number and Vehicle Identification Number (VIN). In what section is that information found?

    _____

12. In what section of the Repair Manual can you find the vehicle lift and support locations?

    _____

13. In what section of the Repair Manual can you find all of the Body Electrical Service Specifications”

    _____

14. In what section of the Repair Manual do you find the “Diagnostic Trouble Code Chart” for SAE controlled DTCs?

    _____

15. What is the part number of the “Diagnostic Check Wire” used as a special service tool on many systems?

    _____

16. What circuit and type of problem is indicated if a DTC PO121 were found?

    _____

17. Reference the Repair Manual of the vehicle assigned to you to locate information about the Wireless Door Lock System.

18. In what Volume and Section of the Repair Manual did you find the Wireless Door Lock System information.

    Repair Manual Volume = _____

    Repair Manual Section = _____

19. Where is the Wireless Door Lock ECU (LS 400) located on the vehicle?

    _____

20. Reference and read the “Pre-Check” Procedure for the Wireless Remote. Outline below the steps necessary to initiate self-diagnostic mode.

    1. _____
    2. _____
    3. _____
    4. _____

       _____
    5. _____

Presentation Demonstration:

Demonstrate:

- Basic Wireless Remote operation
- “Pre-Check Procedure” for initiating self-diagnostic mode using the key

Part 3: EWD

The EWD is one of the best resources for tracking down an electrical problem. Unlike other manuals, it does not provide step-by-step troubleshooting information. You must have a solid understanding of electrical circuit theory and troubleshooting techniques to get the most out of this resource. Learning to read wiring diagram symbols and knowing how to reference information in the EWD is the first step to using the EWD effectively.

21. Reference the 1999 RX 300 EWD on-line using TIS, print the first page of the Wireless Door Lock Control wiring diagram, and answer the questions that follow.

22. Where is the 7.5A gauge fuse located on the vehicle?

    _____

23. Locate the “Wireless Door Lock Buzzer” connector W5 on the wiring diagram and answer the questions that follow:

    a. What color is connector W5?

    _____

    b. How many pins does connector W5 have?

    _____

    c. Where can you find “Wireless Door Lock Buzzer” (W5) on the vehicle?

    _____

    d. What color is the wire leading from pin 1 of connector W5 to pin 3 of Body ECU connector B7C?

    _____

24. Locate ground point connector IF at the bottom of the wiring diagram and answer the questions that follow.

    a. What does the “I” of ground point connector IF indicate?

    _____

    b. Where is ground point connector IF located?

    _____

25. Locate the “Back Door Key Lock and Unlock Switch” (B10) on the wiring diagram. Reference “Connector BC2” leading to the Lock side of the switch and answer the questions that follow.

    a. What kind of a connector is BC2?
       Note: Reference the connector just before the back door Key Lock and Unlock Switch - lock side

       _____

    b. What does the number 8 outside the connector mean?

       _____

    c. What color is the wire leading to connector BC2?

       _____

You have now completed this worksheet. You should have acquired the skills to research information in the service literature, impart information to others, and access service literature on-line using the Technical Information System and print it for your use.

If you have any doubts about your understanding of the material or your skills, please review your work. Once you are confident of your skills, have your instructor verify your work.

Notes

WORKSHEET 2-2
ASSIGNMENT 1
HomeLink®

Vehicle	Year/Prod. Date	Engine	Transmission

Part 1: The Owner's Manual

The Owner's Manual provides one of the most comprehensive references for system operation available to you in your dealership.

1. Reference the Owner's Manual of the vehicle assigned to you and locate information on the Garage Door Opener HomeLink® System.

2. How did you locate this information?
   __ Using the Table of Contents
   __ Using the Index
   __ Other (indicate how) _____

3. In what section of the Owner's Manual did you find the Garage Door Opener System information?

   a. Section Number = _____

   b. Title of Section = _____

   c. Subsection name (group name) = _____

4. How many separate channels (transmitter devices) can HomeLink® operate?

   _____

5. How do you program HomeLink®?

   a. _____

   _____

   b. _____

   _____

   c. _____

   d. _____

6. What if the transmitter has a "rolling code feature?"

   _____

7. How do you program the in-garage receiver to HomeLink®?

_____

_____

8. Should you use the HomeLink® Universal Transmitter with a garage door opener manufactured 20 years ago?

   YES _____ NO _____

9. How do you erase the garage door opener memory?

_____

_____

10. After the HomeLink® transmitter is programmed, can the original transmitter be used to open the garage door?

_____

Part 2: Repair Manual

The Repair Manual is a valuable source of diagnostic information. Finding the information in the Repair Manual is made easy if you know how this resource is organized.

11. Using the Repair Manual, find the section that describes the location of the Engine Serial Number and Vehicle Identification Number (VIN). In what section is that information found?

_____

12. In what section of the Repair Manual can you find the vehicle lift and support locations?

_____

13. In what section of the Repair Manual can you find all of the “Body Electrical Service Specifications?”

_____

14. In what section of the Repair Manual do you find the “Diagnostic Trouble Code Chart” for SAE controlled DTCs?

_____

15. What is the part number of the “Diagnostic Check Wire” used as a special service tool on many systems?

_____

16. What circuit and type of problem is indicated if a DTC PO121 were found?

_____

17. Reference the Repair Manual of the vehicle assigned to you to locate information about the HomeLink® System.

_____

18. At what rate does the red LED flash to indicate Registration Mode?

_____

19. At what rate does the red LED flash to indicate that registration has been successfully competed?

_____

20. At what rate does the red LED flash to indicate that the system is in deletion mode?

_____

Presentation Demonstration:

Demonstrate HomeLink® Transmitter registration procedure (transmitter only).

Hint: HomeLink® registration procedure is found under “Garage Door Opener” in the BE Section of the Repair Manual.

Part 3: EWD

The EWD is one of the best resources for tracking down an electrical problem. Unlike other manuals, it does not provide step-by-step troubleshooting information. You must have a solid understanding of electrical circuit theory and troubleshooting techniques to get the most out of this resource. Learning to read wiring diagram symbols and knowing how to reference information in the EWD is the first step to using the EWD effectively.

21. Reference the 1999 RX 300 EWD on-line using TIS, print the first page of the Garage Door Opener wiring diagram, and answer the questions that follow.

22. Where is the 10A dome fuse located on the vehicle?

_____

23. Locate the “Garage Door Opener (Vanity Light) LH” connector V7 and answer the questions that follow:

    a. What color is connector V7?

    _____

    b. How many pins does connector V7 have?

    _____

    c. Where can you find “Garage Door Opener” connector V7 on the vehicle?

    _____

    d. What color is the wire leading from “Garage Door Opener” connector V7 pin 1 to connector ID1 pin 2?

    _____

24. Locate ground point connector IE at the bottom of the wiring diagram and answer the questions that follow.

    a. What does the “I” of ground point connector IE indicate?

    _____

    b. Where is ground point connector IE located?

    _____

25. Locate the (on the wiring diagram) “Connector ID1” and answer the questions that follow.

    a. What kind of a connector is ID1?

    _____

    b. What does the number 8 outside the connector mean?

    _____

    c. What color is the wire leading to connector ID1?

    _____

You have now completed this worksheet. You should have acquired the skills to research information in the service literature, impart information to others, and access service literature on-line using the Technical Information System and print it for your use.

If you have any doubts about your understanding of the material or your skills, please review your work. Once you are confident of your skills, have your instructor verify your work.

WORKSHEET 2-3
ASSIGNMENT 1
Power Windows & Door Locks

Vehicle	Year/Prod. Date	Engine	Transmission

Part 1: The Owner's Manual

The Owner's Manual provides one of the most comprehensive references for system operation available to you in the dealership.

1. Reference the Owner's Manual of the vehicle assigned to you and locate information on the Power Windows and Door Locks.

2. How did you locate this information?
   __ Using the Table of Contents
   __ Using the Index
   __ Other (indicate how) _____

3. In what section of the Owner's Manual did you find the Power Windows?

   a. Section Number =_____

   b. Title of Section = _____

   c. Subsection name (group name) = _____

4. Which of the following statements correctly describes key lock operation in Lexus vehicles?

   a. The doors lock and unlock simultaneously with either front door.
   b. Turning the key once to the unlock position on the driver's door will unlock the driver's door, twice in succession will unlock all doors simultaneously.
   c. Turning the key once to the unlock position of the passenger's door will unlock all doors simultaneously.
   d. All of the above.

5. Where is the lock lever for locking the rear door child-protector located on the vehicle?

   _____

6. Will the power windows operate with the ignition key in the "ACC" or "LOCK" position?

   YES _____ NO _____

7. What does the "Jam Protection Function" do?

   _____

8. Can the front windows be operated using an ignition key?

   a. Yes = _____

   b. No = _____

9. If the front windows can be operated using an ignition key, explain how.

   _____

   _____

   _____

   _____

Part 2: Repair Manual

The Repair Manual is a valuable source of diagnostic information. Finding the information in the Repair Manual is made easy if you know how this resource is organized.

10. Using the Repair Manual, find the section that describes the location of the Engine Serial Number and Vehicle Identification Number (VIN). In what section is that information found?

    _____

11. In what section of the Repair Manual can you find the vehicle lift and support locations?

    _____

12. In what section of the Repair Manual can you find all of the Body Electrical Service Specifications”

    _____

13. In what section of the Repair Manual do you find the “Diagnostic Trouble Code Chart” for SAE controlled DTCs?

    _____

14. What is the part number of the “Diagnostic Check Wire” used as a special service tool on many systems?

    _____

15. What circuit and type of problem is indicated if a DTC PO121 were found?

    _____

16. Reference the Repair Manual of the vehicle assigned to you to locate information about power window control system?

17. In what Volume and Section of the Repair Manual did you find the Theft Deterrent System information.

    Repair Manual Volume = _____

    Repair Manual Section = _____

18. Where is the Driver's Door ECU (LS 400) located on the vehicle?

    _____

19. Reference and review the "Troubleshooting Chart" for the Power Window Control System. If the automatic operation of one particular window of the vehicle does not operate, what might be the suspected root cause of the problem?

    _____

Presentation Demonstration:

Demonstrate:

- Door lock operation
- Power window jam protection.

Part 3: EWD

The EWD is one of the best resources for tracking down an electrical problem. Unlike other manuals, it does not provide step-by-step troubleshooting information. You must have a solid understanding of electrical circuit theory and troubleshooting techniques to get the most out of this resource. Learning to read wiring diagram symbols and knowing how to reference information in the EWD is the first step to using the EWD effectively.

20. Reference the 1999 RX 300 EWD on-line using TIS, print the first page of the Power Window wiring diagram, and answer the questions that follow.

21. Where is the 7.5A gauge fuse located on the vehicle?

    _____

22. Locate the “Unlock Warning Switch” connector U1 on the wiring diagram and answer the questions that follow:

    a. What color is connector U1?

    _____

    b. How many pins does connector U1 have?

    _____

    c. Where can you find “Unlock Warning Switch” (U1) on the vehicle?

    _____

    d. What color is the wire leading from Body ECU connector B7C pin 8 to connector U1 pin 1?

    _____

23. Locate ground point connector IF at the bottom of the wiring diagram and answer the questions that follow.

    a. What does the “I” of ground point connector IF indicate?

    _____

    b. Where is ground point connector IF located?

    _____

24. Locate (on the wiring diagram) “Connector IA2” leading to the CODE input of the Wireless Door Lock ECU and answer the questions that follow.

    a. What kind of a connector is IA2?

    _____

    b. What does the number 18 outside the connector mean?

    _____

    c. What color is the wire leading to connector IA2?

    _____

You have now completed this worksheet. You should have acquired the skills to research information in the service literature, impart information to others, and access service literature on-line using the Technical Information System and print it for your use.

If you have any doubts about your understanding of the material or your skills, please review your work. Once you are confident of your skills, have your instructor verify your work.

WORKSHEET 2-4
ASSIGNMENT 1
Power Seats

Vehicle	Year/Prod. Date	Engine	Transmission

Part 1: The Owner's Manual

The Owner's Manual provides one of the most comprehensive references for system operation available to you in your dealership.

1. Reference the Owner's Manual of the vehicle assigned to you and locate information on the Power Seats.
2. .How did you locate this information?
   __ Using the Table of Contents
   __ Using the Index
   __ Other (indicate how) _____
3. In what section of the Owner's Manual did you find the Power Seat information?
   a. Section Number =
   b. Title of Section =
   c. Subsection name (group name) =
4. What front seat adjustment features are equipped on the vehicle assigned to you?
   a. __ Seat position control switch
   b. __ Seat cushion angle and height control switch
   c. __ Seat back angle control switch
   d. __ Lumbar support control switch
5. Locate the "Driving Position Memory System" in the Owners Manual.
6. How many driving position profiles can be entered into the computer's memory?

   _____
7. What conditions need to be met to record a driving position in the computer's memory?
   a. Ignition key position =
   b. Selector lever position =
8. How do you enter the driving position in the computer's memory?
   a. _____
   b. _____
   c. _____
   _____

9. If you enter another driving position over a previously memorized position, what happens to the original memorized position?

_____

10. Can the driving position memory control system be activated while driving?

YES _____ NO _____

11. What happens to this system if the battery is disconnected?

_____

Part 2: Repair Manual

The Repair Manual is a valuable source of diagnostic information. Finding the information in the Repair Manual is made easy if you know how this resource is organized.

12. Using the Repair Manual, find the section that describes the location of the Engine Serial Number and Vehicle Identification Number (VIN). In what section is that information found?

_____

13. In what section of the Repair Manual can you find the vehicle lift and support locations?

_____

14. In what section of the Repair Manual can you find all of the “Body Electrical Service Specifications?”

_____

15. In what section of the Repair Manual do you find the “Diagnostic Trouble Code Chart” for SAE controlled DTCs?

_____

16. What is the part number of the “Diagnostic Check Wire” used as a special service tool on many systems?

_____

17. What circuit and type of problem is indicated if a DTC PO121 were found?

_____

18. Reference the Repair Manual of the vehicle assigned to you to locate information about the power seat control system without driving position memory to answer the following question.

19. List the five motors used for seat adjustment on the passenger's seat.

_____

20. Reference the Repair Manual of the vehicle assigned to you to locate information about the Power Seat Control System with Driving Position Memory**.**

21. In what section of the repair manual is this information found?

_____

Presentation Demonstration:

Demonstrate:

- Seat operation
- "Driving Position Memory System" operation.

Part 3: EWD

The EWD is one of the best resources for tracking down an electrical problem. Unlike other manuals, it does not provide step-by-step troubleshooting information. You must have a solid understanding of electrical circuit theory and troubleshooting techniques to get the most out of this resource. Learning to read wiring diagram symbols and knowing how to reference information in the EWD is the first step to using the EWD effectively.

22. Reference the **1999 RX 300 EWD** on-line using TIS, print the first page of the Power Seat **(w/o Driving Position Memory)** wiring diagram, and answer the questions that follow.

23. Where is the 30A Power fuse located on the vehicle?

_____

24. Locate the "Power Seat Motor (Driver's seat front vertical control)" connector P20 on the wiring diagram and answer the questions that follow:

    a. What color is connector P20?

    _____

    b. How many pins does connector P20 have?

    _____

    c. Where can you find connector P20 on the vehicle?

    _____

d. What color is the wire leading from pin 1 of connector P20 to pin 10 of the Power Seat Control Switch (Driver's Seat- P15 **front vertical up switch**)?

_____

25. Locate ground point connector BJ at the bottom of the wiring diagram and answer the questions that follow.

a. What does the "B" of ground point connector BJ indicate?

_____

b. Where is ground point connector BJ located?

_____

26. Locate the connector IA1 on the wiring and answer the questions that follow.

a. What kind of a connector is IA1?

_____

b. What does the number 8 outside the connector mean?

_____

c. What color is the wire leading to connector IA1 from connector BE1?

_____

You have now completed this worksheet. You should have acquired the skills to research information in the service literature, impart information to others, and access service literature on-line using the Technical Information System and print it for your use.

If you have any doubts about your understanding of the material or your skills, please review your work. Once you are confident of your skills, have your instructor verify your work.

WORKSHEET 2-5
ASSIGNMENT 1
Audio System

Vehicle	Year/Prod. Date	Engine	Transmission

Part 1: The Owner's Manual

The Owner's Manual provides one of the most comprehensive references for system operation available to you in your dealership.

1. Reference the Owner's Manual of the vehicle assigned to you and locate information on the Audio System.

2. How did you locate this information?
   __ Using the Table of Contents
   __ Using the Index
   __ Other (indicate how) _____

3. In what section of the Owner's Manual did you find the Audio System information?

   a. Section Number = _____

   b. Title of Section = _____

   c. Subsection name (group name) = _____

4. Does the cassette player automatically activate when the audio system power button is depressed? Explain your answer.

   Yes = _____

   No = _____

5. Does ejecting the cassette tape or compact disc turn the audio system OFF automatically? Explain your answer.

   Yes = _____

   _____

   No = _____

6. What does the "BALANCE" knob adjust?

   _____

7. What does the “FADER” knob adjust?

_____

8. What does it mean when “ST” appears on the radio display?

_____

9. How do you preset stations?

   a. _____

   b. _____

10. What happens to your preset selections if the battery is disconnected or a fuse is blown?

_____

Part 2: Repair Manual

The Repair Manual is a valuable source of diagnostic information. Finding the information in the Repair Manual is made easy if you know how this resource is organized.

11. Using the Repair Manual, find the section that describes the location of the Engine Serial Number and Vehicle Identification Number (VIN). In what section is that information found?

_____

12. In what section of the Repair Manual can you find the vehicle lift and support locations?

_____

13. In what section of the Repair Manual can you find all of the Body Electrical Service Specifications?

_____

14. In what section of the Repair Manual do you find the “Diagnostic Trouble Code Chart” for SAE controlled DTCs?

_____

15. What is the part number of the “Diagnostic Check Wire” used as a special service tool on many systems?

_____

16. What circuit and type of problem is indicated if a DTC PO121 were found?

    _____

17. Reference the Repair Manual of the vehicle assigned to you to locate information about the Audio System.

18. In what Volume and Section of the Repair Manual did you find the Audio System information?

    Repair Manual Volume = _____

    Repair Manual Section = _____

19. Name and briefly describe four types of reception problems?

    _____

    _____

    _____

    _____

    _____

    _____

20. Noise from the Rear Window Defogger Circuit is grounded through a component to prevent radio interference. What is the component?

    _____

21. When performing a resistance check of the radio antenna, terminal connection 1 and 2 of the main antenna should under normal conditions: (select the correct response below)
    ___ show continuity
    ___ show no continuity

Presentation Demonstration: On a vehicle equipped with AVC-LAN (i.e. Pioneer made). Demonstrate:

- How to preset stations to the Audio System
- Audio System diagnostic check mode (i.e. self-diagnosis)

Note: Perform this procedure on a vehicle equipped with an Pioneer made Audio System or on the simulator.

Hint: AVC-LAN self-diagnosis procedures is found in the GS 300/400 and ES 300 Repair Manual in the BE section under “Audio System”.

Part 3: EWD

The EWD is one of the best resources for tracking down an electrical problem. Unlike other manuals, it does not provide step-by-step troubleshooting information. You must have a solid understanding of electrical circuit theory and troubleshooting techniques to get the most out of this resource. Learning to read wiring diagram symbols and knowing how to reference information in the EWD is the first step to using the EWD effectively.

Reference the 1999 RX 300 EWD on-line using TIS, print the first and second page of the Radio and Player wiring diagram, and answer the questions that follow.

22. Where is the 20A Radio NO. 1 fuse located on the vehicle?

    _____

23. Locate the “Radio and Player” connector R3B on the wiring diagram and answer the questions that follow:

    a. What color is connector R3B?

    _____

    b. How many pins does connector R3B have?

    _____

    c. Where can you find connector R3B on the vehicle?

    _____

    d. What color is the wire leading from pin 8 of connector R3B to pin 17 of connector IK1?

    _____

24. Locate ground point connector BM at the bottom of the second page of the wiring diagram and answer the questions that follow.

    a. What does the “B” of ground point connector BM indicate?

    _____

    b. Where is ground point connector BM located?

    _____

25. Locate the “connector IM1 on the wiring and answer the questions that follow.

    a. What kind of a connector is IM1?

    _____

    b. What does the number 8 outside the connector mean?

    _____

    c. What color is the wire leading to connector IM1 from the Stereo Amplifier connector S14A?

    _____

You have now completed this worksheet. You should have acquired the skills to research information in the service literature, impart information to others, and access service literature on-line using the Technical Information System and print it for your use.

If you have any doubts about your understanding of the material or your skills, please review your work. Once you are confident of your skills, have your instructor verify your work.

Notes

WORKSHEET 2-6
ASSIGNMENT 1
A/C System

Vehicle	Year/Prod. Date	Engine	Transmission

Part 1: The Owner's Manual

The Owner's Manual provides one of the most comprehensive references for system operation available to you in your dealership.

1. Reference the Owner's Manual of the vehicle assigned to you and locate information on the A/C System.

2. How did you locate this information?
   __ Using the Table of Contents
   __ Using the Index
   __ Other (indicate how) _____

3. In what section of the Owner's Manual did you find the A/C System information?
   a. Section Number = _____
   b. Title of Section = _____
   c. Subsection name (group name) = _____

4. Is switching of the air intake between RECIRCULATED AIR and OUTSIDE AIR automatically adjusted when the "AUTO" button is depressed?

   YES _____ NO _____

5. Depressing the "TEMP" button changes the temperature:
   __ on the driver and passenger side simultaneously
   __ on the driver's side only
   __ on the passenger's side only

6. What does the "DUAL" button indicate if ON?

   _____

7. What does the MODE button do?

   _____

8. How can you change the sensitivity of the sensor switching between RECIRCULATED AIR and OUTSIDE AIR in AUTOMATIC mode?

   _____

   _____

   _____

9. What component is not operating when the indicator of the “A/C” button blinks?

_____

10. Will the air conditioning work if the outside temperature is 32° F?

YES _____ NO _____

Part 2: Repair Manual

The Repair Manual is a valuable source of diagnostic information. Finding the information in the Repair Manual is made easy if you know how this resource is organized.

11. Using the Repair Manual, find the section that describes the location of the Engine Serial Number and Vehicle Identification Number (VIN). In what section is that information found?

_____

12. In what section of the Repair Manual can you find the vehicle lift and support locations?

_____

13. In what section of the Repair Manual can you find all of the Body Electrical Service Specifications?”

_____

14. In what section of the Repair Manual do you find the “Diagnostic Trouble Code Chart” for SAE controlled DTCs?

_____

15. What is the part number of the “Diagnostic Check Wire” used as a special service tool on many systems?

_____

16. What circuit and type of problem is indicated if a DTC PO121 were found?

_____

17. Reference the Repair Manual of the vehicle assigned to you to locate information about the A/C System.

18. List the test conditions that must be observed when performing an “On-Vehicle Inspection” while observing the sight glass of the liquid tube (receiver/dryer).

_____

_____

_____

_____

_____

19. Reference the “Symptom Table” in the A/C Section of the Repair Manual. What is most likely the cause of a problem if:

    a. the temperature difference between the compressor inlet and outlet is noticeably different?

    b. when observing the sight glass immediately after the A/C is turned OFF, the refrigerant foams and then turns clear?

    _____

20. Where is the solar sensor located for the A/C System?

_____

Presentation Demonstration:

- Demonstrate the A/C operation
- A/C Diagnostic Check Mode (i.e. self-diagnosis), including indicator, sensor and actuator check.

  Hint: A/C self-diagnosis procedures are found in the DI Section of the Repair Manual under “Air Conditioning System” Pre Check.

  Attention: If you are performing self-diagnosis on a Nav equipped vehicle, use the TEMP button instead of the A/C button to change to a step operation.

Part 3: EWD

The EWD is one of the best resources for tracking down an electrical problem. Unlike other manuals, it does not provide step-by-step troubleshooting information. You must have a solid understanding of electrical circuit theory and troubleshooting techniques to get the most out of this resource. Learning to read wiring diagram symbols and knowing how to reference information in the EWD is the first step to using the EWD effectively.

21. Reference the 1999 RX 300 EWD on-line using TIS, print the first page of the Automatic A/C wiring diagram, and answer the questions that follow.

22. Where is the 7.5A gauge fuse located on the vehicle?

_____

23. Locate the “Heater Relay” connector H8 on the wiring diagram and answer the questions that follow:

    a. What color is connector H8?

    _____

    b. How many pins does connector H8 have?

    _____

    c. Where can you find “Heater Relay” (H8) on the vehicle?

    _____

    d. What color is the wire leading from the Heater Relay (coil side) connector H8 pin 3 to Junction Connector J6?

    _____

24. Locate connector IG1 on the wiring diagram and answer the questions that follow.

    a. What does the “I” of connector IG1 indicate?

    _____

    b. Where is connector IG1 located?

    _____

25. Locate (on the wiring diagram) Connector IG1 between the Blower Motor Control Relay and the Heater Relay and answer the questions that follow.

    a. What kind of a connector is IG1?

    _____

    b. What does the number 2 outside the connector mean?

    _____

    c. What color is the wire leading to connector IG1 from the Blower Motor Control Relay?

    _____

You have now completed this worksheet. You should have acquired the skills to research information in the service literature, impart information to others, and access service literature on-line using the Technical Information System and print it for your use.

If you have any doubts about your understanding of the material or your skills, please review your work. Once you are confident of your skills, have your instructor verify your work.

WORKSHEET 2-7
ASSIGNMENT 1
Theft Deterrent System

Vehicle	Year/Prod. Date	Engine	Transmission

Part 1: The Owner's Manual

The Owner's Manual provides one of the most comprehensive references for system operation available to you in your dealership.

1. Reference the Owner's Manual of the vehicle assigned to you and locate information on the Theft Deterrent System.

2. How did you locate this information?
   __ Using the Table of Contents
   __ Using the Index
   __ Other (indicate how) _____

3. In what section of the Owner's Manual did you find the Theft Deterrent System information?

   a. Section Number = _____

   b. Title of Section = _____

   c. Subsection name (group name) = _____

4. When does the system sound an alarm?

   a. _____

   b. _____

5. How is the system set?

   a. _____

   b. _____

6. What indicates that the system is set?

   _____

7. When is the system canceled?

   _____

8. If the alarm is activated, how can you stop it?

_____

_____

9. How do you test the system?

_____

_____

_____

_____

10. Can the turn signals be set not to flash?

YES _____ NO _____

Part 2: Repair Manual

The Repair Manual is a valuable source of diagnostic information. Finding the information in the Repair Manual is made easy if you know how this resource is organized.

11. Using the Repair Manual, find the section that describes the location of the Engine Serial Number and Vehicle Identification Number (VIN). In what section is that information found?

_____

12. In what section of the Repair Manual can you find the vehicle lift and support locations?

_____

13. In what section of the Repair Manual can you find all of the Body Electrical Service Specifications”

_____

14. In what section of the Repair Manual do you find the “Diagnostic Trouble Code Chart” for SAE controlled DTCs?

_____

15. What circuit and type of problem is indicated if a DTC PO121 were found?

_____

16. What is the part number of the “Diagnostic Check Wire” used as a special tool on many systems?

    _____

17. Reference the Repair Manual of the vehicle assigned to you to locate information about the Theft Deterrent System.

18. In what Volume and Section of the Repair Manual did you find the Theft Deterrent System information.

    Repair Manual Volume = _____

    Repair Manual Section = _____

19. Where is the Theft Deterrent Horn (LS 400) located on the vehicle?

    _____

20. Reference and read the “Pre-Check” Procedure for the Theft Deterrent System. Outline below the steps necessary to turn “passive mode” OFF?

    _____

    _____

    _____

    _____

    _____

    _____

    _____

Presentation Demonstration:

Demonstrate “Testing the System.”

Hint: “Testing the System” procedures are indicated in the Owner’s Manual.

Part 3: EWD

The EWD is one of the best resources for tracking down an electrical problem. Unlike other manuals, it does not provide step-by-step troubleshooting information. You must have a solid understanding of electrical circuit theory and troubleshooting techniques to get the most out of this resource. Learning to read wiring diagram symbols and knowing how to reference information in the EWD is the first step to using the EWD effectively.

21. Reference the 1999 RX 300 EWD on-line using TIS, print the first page of the Theft Deterrent and Door Lock Control wiring diagram, and answer the questions that follow.

22. Where is the 7.5A gauge fuse located on the vehicle?

    _____

23. Locate the “Theft Deterrent Back Door Courtesy Switch” connector B9 on the wiring diagram and answer the questions that follow:

    a. What color is connector B9?

    _____

    b. How many pins does connector B9 have?

    _____

    c. Where can you find “Theft Deterrent Back Door Courtesy Switch” (B9) on the vehicle?

    _____

    d. What color is the wire leading from connector BC2 pin 5 to pin 2 of connector B9?

    _____

24. Locate ground point connector IF at the bottom of the wiring diagram and answer the questions that follow.

    a. What does the “I” of ground point connector IF indicate?

    _____

    b. Where is ground point connector IF located?

    _____

25. Locate the “Back Door Key Lock and Unlock Switch” (B10) on the wiring diagram. Reference connector BC2 leading to the Lock side of the switch and answer the questions that follow.

    a. What kind of a connector is BC2?

    _____

    b. What does the number 8 outside the connector mean?

    _____

    c. What color is the wire leading to connector BC2?

    _____

You have now completed this worksheet. You should have acquired the skills to research information in the service literature, impart information to others, and access service literature on-line using the Technical Information System and print it for your use.

If you have any doubts about your understanding of the material or your skills, please review your work. Once you are confident of your skills, have your instructor verify your work.

Notes

WORKSHEET 2-8
ASSIGNMENT 1
Air Bags & Seat Restraints (SRS)

Vehicle	Year/Prod. Date	Engine	Transmission

Part 1: The Owner's Manual

The Owner's Manual provides one of the most comprehensive references for system operation available to you in the dealership.

1. Reference the Owner's Manual of the vehicle assigned to you and locate information on SRS. How did you locate this information?
   __ Using the Table of Contents
   __ Using the Index
   __ Other (indicate how) _____

2. In what section of the Owner's Manual did you find the SRS information?

   a. Section Number = _____

   b. Title of Section = _____

   c. Subsection name (group name) = _____

3. In the event of a frontal collision, is the front passenger airbag activated with no passenger in the front seat?

   YES _____ NO _____

4. In the event of a frontal collision, is the front passenger seat belt pretensioner activated with no passenger in the front seat?

   YES _____ NO _____

5. The seat belt indicator light illuminates when the ignition key is turned to "ACC" or "ON." If working properly, how long before the light should go out?

   _____

6. What does it indicate if the SRS indicator light?

   a. Stays ON = _____

   b. Flashes = _____

7. Under what conditions will the seat belt pretensions work?

_____

_____

_____

8. Will the air bag and seat belt pretensioner activate if the vehicle rolls over?

   YES _____ NO _____

9. Two sensors comprise the SRS airbag sensor assembly. What are they?

   a. _____

   b. _____

10. What does the sensor assembly detect to activate the system?

_____

11. Where should the child restraint system be installed in the vehicle?

_____

Part 2: Repair Manual

The Repair Manual is a valuable source of diagnostic information. Finding the information in the Repair Manual is made easy if you know how this resource is organized.

12. Using the Repair Manual, find the section that describes the location of the Engine Serial Number and Vehicle Identification Number (VIN). In what section is that information found?

_____

13. In what section of the Repair Manual can you find the vehicle lift and support locations?

_____

14. In what section of the Repair Manual can you find all of the “Body Electrical Service Specifications?”

_____

15. In what section of the Repair Manual do you find the “Diagnostic Trouble Code Chart” for SAE controlled DTCs?

_____

16. What is the part number of the “Diagnostic Check Wire” used as a special service tool on many systems?

_____

17. What circuit and type of problem is indicated if a DTC PO121 were found?

_____

18. Reference the Repair Manual of the vehicle assigned to you to locate information about the SRS System.

19. What type of a voltmeter must be used when troubleshooting the system’s electrical system?

_____

20. How long do you have to wait to begin work on the system after the ignition switch is turned to the LOCK position and the negative battery cable is disconnected from the battery and why is it important?

_____

_____

21. What color are all SRS connector’s on Lexus vehicles?

_____

Presentation Demonstration:

Demonstrate airbag deployment.

Hint: Airbag Deployment is found in the RS Section of the Repair Manual under “Disposal” (ask your instructor for the appropriate SST).

Part 3: EWD

The EWD is one of the best resources for tracking down an electrical problem. Unlike other manuals, it does not provide step-by-step troubleshooting information. You must have a solid understanding of electrical circuit theory and troubleshooting techniques to get the most out of this resource. Learning to read wiring diagram symbols and knowing how to reference information in the EWD is the first step to using the EWD effectively.

22. Reference the 1999 RX 300 EWD on-line using the TIS, print the first page of the SRS wiring diagram, and answer the questions that follow.

23. Where is the 7.5A SRS-B fuse located on the vehicle?

_____

24. Locate the “SRS Warning Light” connector C14 on the wiring diagram and answer the questions that follow:

    a. What color is connector C14?

    _____

    b. How many pins does connector C14 have?

    _____

    c. Where can you find “SRS Warning Light” connector C14 on the vehicle?

    _____

    d. What color is the wire leading from the 7.5A SRS-B fuse to pin 8 of “SRS Warning Light” connector C14?

    _____

25. Locate ground point connector EC at the bottom of the wiring diagram and answer the questions that follow.

    a. What does the “E” of ground point connector EC indicate?

    _____

    b. Where is ground point connector EC located?

    _____

26. Locate the connector IH1 on the wiring diagram and answer the questions that follow:

    a. What kind of a connector is IH1?

    _____

    b. What does the number 4 outside the connector mean?

    _____

    c. What color is the wire leading to connector IH1 from the Data Link Connector D1?

    _____

You have now completed this worksheet. You should have acquired the skills to research information in the service literature, impart information to others, and access service literature on-line using the Technical Information System and print it for your use.

If you have any doubts about your understanding of the material or your skills, please review your work. Once you are confident of your skills, have your instructor verify your work.

Notes

WORKSHEET 2-10
ASSIGNMENT 2
PDS in Two Parts

Vehicle	Year/Prod. Date	Engine	Transmission

Required Tools:

- Vehicle
- PDS Manual
- New Vehicle Delivery Check Sheet
- Appropriate Repair Manual
- Appropriate EWD
- Appropriate Owner's Manual
- Lexus Diagnostic Tester & Software
- Lexus Diagnostic Toolset Operator's Manual
- Repair Order
- Battery Analyzer
- Hand Tools & Shop Towels
- Fender Covers, seat covers, & floor mats

The PDS will be performed in two parts. The purpose of this exercise is to provide experience with the Lexus product line while you become familiar with the materials and techniques required to perform an effective Lexus PDS. Take your time and enjoy the Lexus product line during these two PDS assignments. Establish and develop an effective order of operations that you may adopt and use during PDS at your dealership.

Part 1 will cover the Exterior, Under Vehicle, and Under Hood portions of the Pre-Delivery Service. Part 2 will cover the Interior (including the trunk) and the Road Test portions of the PDS.

Use the PDS Manual (the section appropriate to the vehicle assigned), the "New Vehicle Delivery Check Sheet," and the Repair Order during your PDS. Complete the "New Vehicle Delivery Check Sheet," identify and verify any problems, and properly document all concerns on the repair order provided.

On the final day of class you will be required to perform a full PDS. Your assigned vehicle will have instructor-installed problems which you will be expected to identify, verify and properly document.

Training Objective: To provide relevant practice of the identification, investigative, and reporting skills required to address an incident at PDS, as well as to provide practice with the use of technical resources available in the dealership.

Technician Objective: At the conclusion of this worksheet you will be able to:

- Verify the Condition - identify a problem when conducting a Pre-Delivery Service.
- Determine the Related Symptom(s)- research the proper operation and investigate related systems or components to narrow down the possible causes of the fault.
- Analyze the Symptom(s) - develop a "troubleshooting tree" and define a plan of action to verify the problem.
- Report the results of your investigation on the Repair Order and/or Technical Field Product Report.

If you have any questions or concerns about this assignment, approach your instructor for direction.

Notes

DIAGNOSTIC TECHNIQUE AND DOCUMENTATION

Diagnosing a Customer Concern

Use of all the reference manuals is an important element in gathering the information you need to repair a vehicle. Up to this point, we've covered the resources that Lexus provides to assist you in diagnosing customer concerns. However, for any repair, the most important information resources really are the customer and you. The information from the customer about their concern, and the information you gather when you perform your own inspections on the vehicle are all brought together in the six-step diagnostic process.

Six-Step Diagnostic Process

No matter what system you are working with, there are always six separate steps that you will make in resolving the condition:

1. **Verify the Condition**
2. **Determine the Related Symptoms**
3. **Analyze the Symptoms**
4. **Isolate the Cause**
5. **Correct the Cause**
6. **Check for Proper Operation**

6-STEP Diagnostic Process

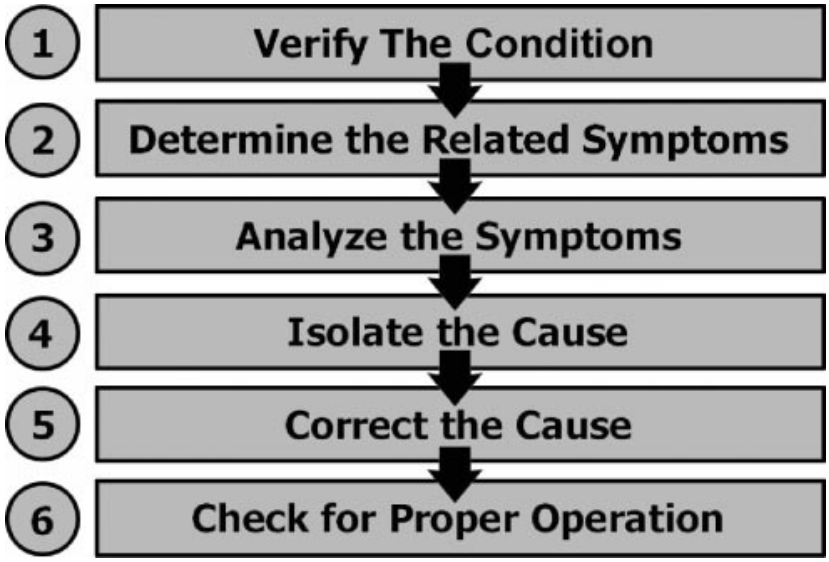

Fig. 3-1

Verifying the Condition

It is always helpful to know exactly what type of condition or symptom you are looking for before you begin troubleshooting any customer concern. This allows you to eliminate certain systems and narrow down the possible "root cause" of the problem.

Problem confirmation starts with an accurate description of the operating conditions at the time the problem occurred. An accurate description of the conditions from the customer will be most helpful to you as a technician when attempting to duplicate the problem.

Lexus encourages you to talk with the customer whenever possible to get a clear understanding of the concern. If necessary, this may require a test drive with the customer to determine the source and nature of the complaint. It is also important to keep in mind that certain customer concerns may actually be "normal" characteristics of the vehicle. Educating the customer using the service literature to illustrate your points in these instances will enhance your expertise in his eyes and exceed his expectations of the Service Department.

There are three parts to actually verifying any condition: you must understand what the customer is describing, decide if it is normal or not, and then operate the vehicle to see if the symptom recurs. Essentially, the customer needs to provide the following details about their concern:

- **What are the symptoms?**
- **When does it occur?**

If the symptoms are intermittent, you will also need to know:

- **Where does it occur?**
- **Who was driving?**

Your Service Consultants are trained by Lexus to ask the right questions when interviewing the customer. Lexus also provides "Customer Problem Analysis Check Sheets" in the DI Section of the Repair Manual that can help focus information gathered from the customer.

After getting this information from the customer, the Service Consultant should then try to duplicate the condition. If the condition can't be duplicated, more information (or possibly a test drive) is necessary. *It's impossible to repair a condition that you cannot duplicate!*

As indicated, Lexus encourages Technicians and Diagnostic Specialists to talk to the customer whenever there are any questions. This clear line of communication can make the difference between a successful repair and one where the customer is incorrectly told that "there is no problem found." Every piece of information about the condition is another "clue" for your use in remedying the problem.

Verifying the Condition

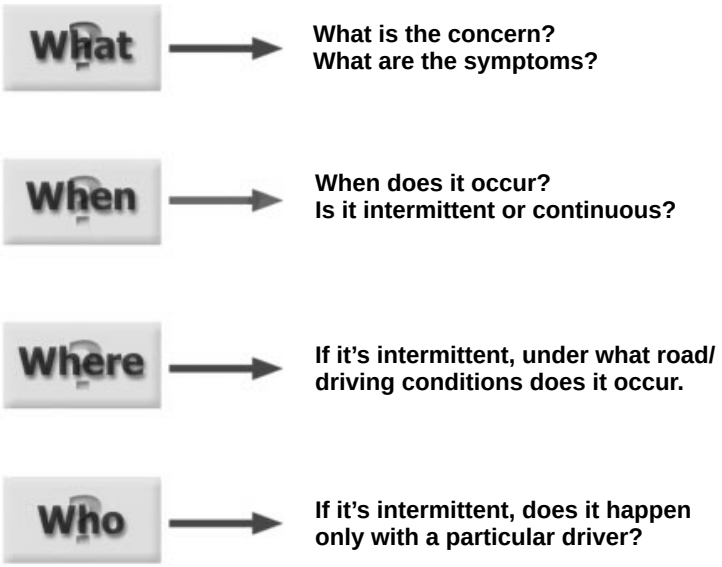

Fig. 3-2

Determining the Related Symptoms

When a customer explains their concern, it will usually be focused on a single area of the system's operation. From a technician's point of view, you want to know how the *entire* system works. By looking at the additional functions that are working or not working, you will be able to gather additional clues as to what is causing the condition.

For example, if the customer states that the Dome Light does not work, there is a lot more information about the system that you need to know before attempting to find the cause. As a technician, you would look for "related symptoms" such as:

- **When any of the doors are opened, does the light turn ON? Open the other doors.**

  You find that it works normally except on the driver's door

- **Does the light operate when the switch is manually turned to the ON position?**
  Turn the switch to manual.

  You find that the light works with the manual switch.

- **Do any of the other courtesy lights work?**
  Check the courtesy lights.

  You find that the other courtesy lights work for all doors except the driver's door.

- **Does the key "buzzer" work while the key is in the ignition?**
  Check the key reminder buzzer.

  You find that it does not.

The answers to these questions will help you narrow down the specific areas that require checking, saving you time and effort.

Analyzing the Symptoms

After you've done your "research," you need to "think" a moment and piece all of the observations together. By thinking about the condition first, you can avoid having to make *physical* inspections on every component in the system. You can focus your efforts only on the parts of the system that can actually cause the condition. With the example Dome Light condition, your related symptom checks tell you the following:

- **Since the dome light works when the other doors are opened, you have verified that:**
  - **The Dome Light Bulb is OK**
  - **There is power and ground at the bulb**
  - **The door switch circuits to each of the doors except the driver's door is OK**
  - **The Integration Relay appears to be working**
  - **Another circuit (Unlock Warning System) does not warn you that the key is in the ignition. This confirms that two systems that share the same courtesy switch circuit to the driver's door are inoperative.**

With this information you can effectively plan a strategy to isolate the cause of the condition. And you've saved a lot of time because you don't have to check the entire interior light circuit, just the driver door switch circuit.

Analyzing the Symptoms

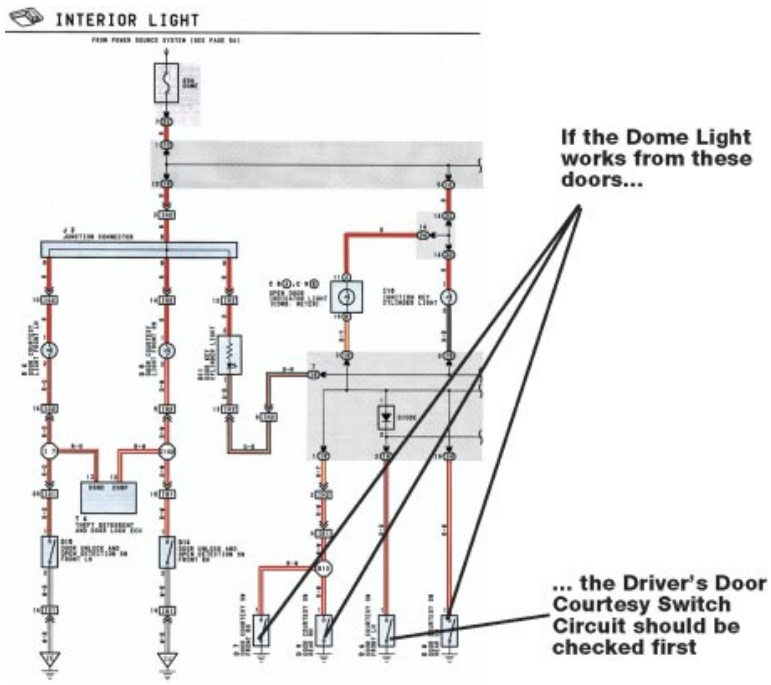

Fig. 3-3

Isolating the Cause

To isolate the cause of the problem, use the manuals to help you locate components and connectors on the car. In this case, because it's an electrical circuit, the EWD is the best.

As discussed earlier, the location tables in the EWD will help you to find which connectors are easy to reach (usually the first place to check).

Remedy the Cause/ Check for Proper Operation

Fixing the cause is usually the easy part of the process. After making the repair, it is extremely important to recheck the vehicle. Perform the same tests that you did when you started, checking all of the system's operation. Ensure that the vehicle is operating properly, that the original symptom has been remedied, and that no new problems have been introduced as a result of the repair. This thorough inspection after the repair is made will ensure that the Lexus customer will be satisfied with the repair.

Although an electrical problem was used as an example, the 6-step procedure we've covered applies to any vehicle condition that needs diagnosis.

Finishing Up

In keeping with Lexus' goal of exceeding the Customer's expectation, be sure to return the car in better condition; have the vehicle washed and vacuumed. These little touches will have a very positive effect on the customer's perception of the work you performed and your professionalism.

Troubleshooting Tree (Logic Diagram)

A "Troubleshooting Tree" is a flow chart-type of diagram used in a number of different applications in many diverse industries. The automotive industry employs the "troubleshooting tree" extensively to demonstrate a variety of diagnostic procedures.

Lexus provides Troubleshooting Trees (sometimes referred to as "logic trees" or "diagnostic flow-charts") of various configurations to visually illustrate and/or outline a diagnostic process.

Brief Overview - Construction of a Troubleshooting Tree

The purpose of a troubleshooting tree is to communicate a logical progression of actions and decisions (based upon the consequence of the actions) in a simplified visual manner. They may be used as a "road map" for a plan of attack. They may also serve as a reflection (or snapshot) of those actions that have already been verified. *That is, they are used to project diagnostically "where you are going," as well as, provide a history of "where you have been."*

Troubleshooting trees, or diagnostic flow-charts, in their most simplified form, are a series of actions and decisions organized in a logical sequence. They are easy to read and clearly illustrate the decisions involved. To produce a troubleshooting tree, you need two symbols: a rectangle to represent actions and a diamond to represent decisions.

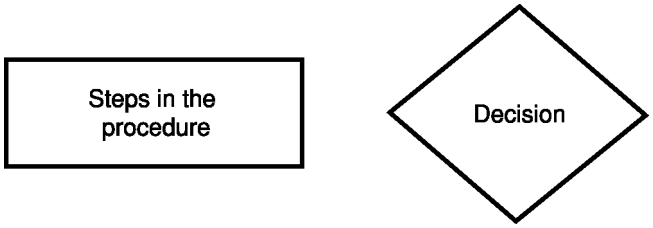

A procedure is a series of steps leading to a conclusion or outcome. The troubleshooting tree provides a way to visualize each of the steps in a procedure and the key decisions that are made while performing the procedure. In other words, each procedure has a beginning and an end, with a series of steps in between.

Each step represents one of the actions that needs to be accomplished to conclude (perform) the procedure. The individual steps in a procedure are not necessarily related to one another, except in combination, and as they contribute to the outcome of the procedure.

For example: The procedure for Transponder Key Code Erasure

The steps that (in combination) accomplish the task of Transponder Key Code Erasure are:

1. Insert the master key in the key cylinder
2. Depress and release the accelerator pedal 6 times
3. Depress and release the brake pedal 7 times.
4. Remove the master key.
5. End of procedure, key code erased.

Each step represents one of the actions that needs to be taken to erase the transponder key code.

Transponder Key Code Erasure Procedure

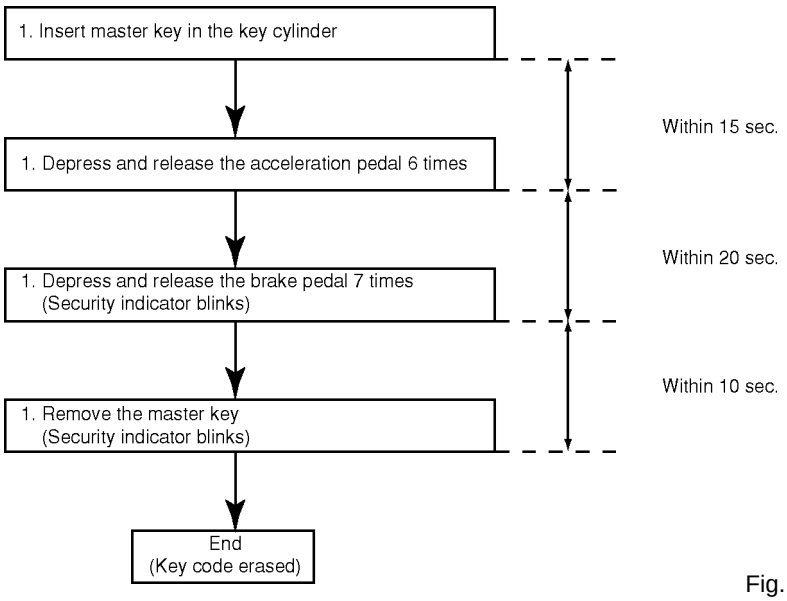

Fig. 3-4

"The Key Code Erasure Procedure" for the Engine Immobilizer System found in the Body Electrical Section of the Repair Manual is a working example of a troubleshooting tree used to demonstrate the steps needed to perform a procedure. As you can see each action has been placed in a rectangle.

Notice that the troubleshooting tree is rather linear. That is, it has only one dimension because it is composed only of actions (rectangles). When we add decisions to the procedure, the troubleshooting tree develops into a more dimensional visual tool.

Decisions are quite different than actions. Whereas each step represents one action, decisions result in alternative actions. Therefore, we need a way to represent that a decision was made, and that alternative actions were derived from the decision.

A diamond shape is a perfect way to represent a decision on a troubleshooting tree. It provides a way to represent the alternative actions resulting from a decision. We can draw lines protruding from the points of the diamond to illustrate the different alternatives that might result as a consequence of the decision.

Generally, two alternative actions result: do this action as a result of the decision, or do that action as a result of the decision. This can be represented as, either/or; yes/no; OK/NG; ON/OFF; etc.

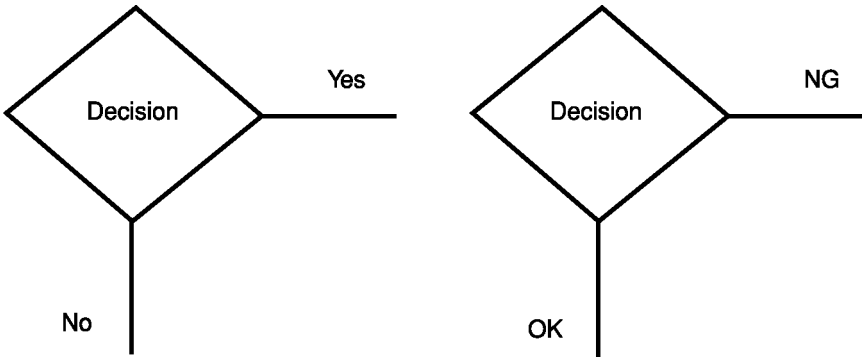

Additionally, the diamond shape allows us to show the action that lead to the decision, as well as providing an alternative to allow a loop back to some earlier point in the procedure (reference the Engine Immobilizer Registration Procedure shown).

Engine Immobilizer Registration Procedure

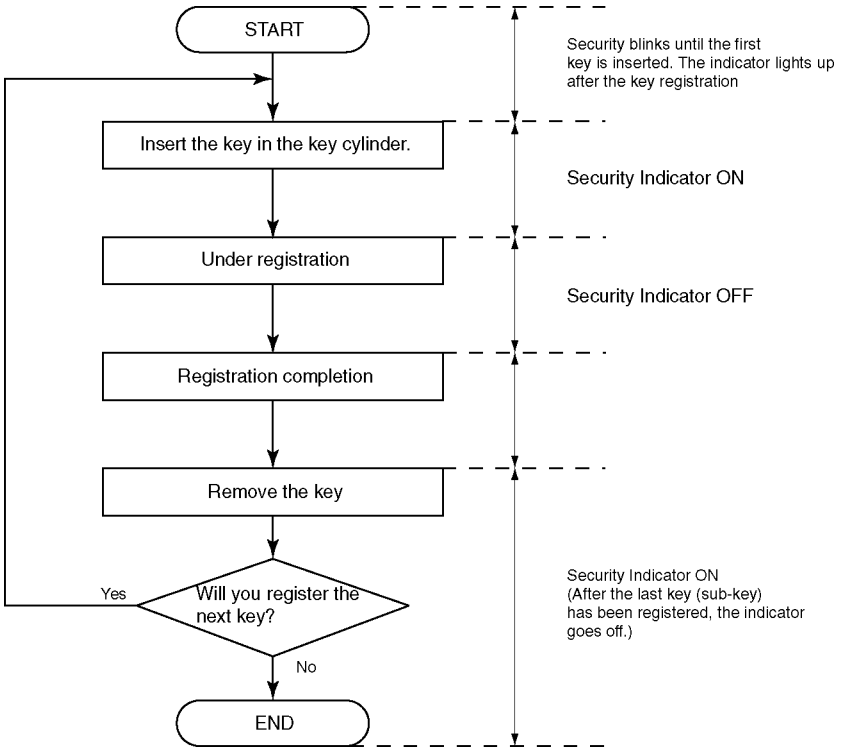

Fig. 3-5

Variations of Troubleshooting Trees

As you can see, “Troubleshooting trees” provide an easy way to visualize where key decisions have to be made. They also make it easy to see what actions should follow those decisions.

Sometimes they are not of so pure a form as those illustrated thus far. Occasionally, the geometric shapes used are not rectangles and diamonds; however, they always have actions and decisions organized in a logical sequence with a beginning and an end.

The DI Section of the Repair Manual provides excellent examples of variations of troubleshooting trees.

Lexus Navigation System - How to Proceed With Troubleshooting and Inspection Procedure

DI–908

DIAGNOSTICS – LEXUS NAVIGATION SYSTEM

LEXUS NAVIGATION SYSTEM

HOW TO PROCEED WITH TROUBLESHOOTING

HINT:
The ECU of this system is connected to the multiplex communication system. Therefore, before starting troubleshooting, make sure to check that there is no trouble in the multiplex communication system.

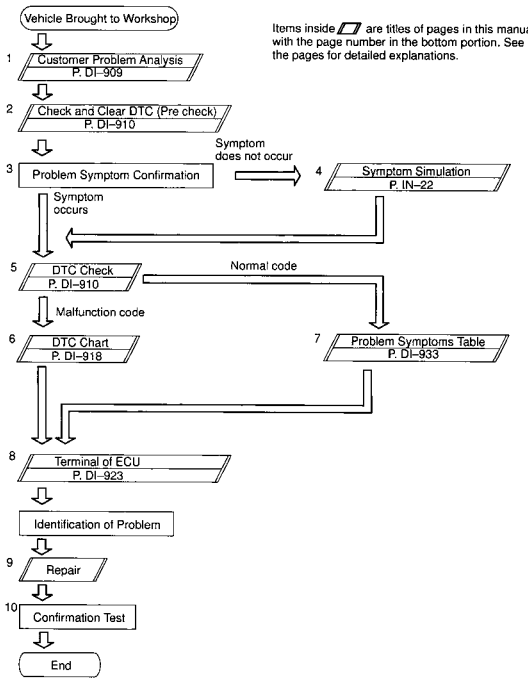

DI–405

DIAGNOSTICS – VEHICLE SKID CONTROL (VSC) SYSTEM

INSPECTION PROCEDURE

HINT:
Start the inspection from step 1 in case of using the LEXUS hand–held tester and start from step 5 in case of not using the LEXUS hand–held tester.

1	**Is DTC output for VSC?**

Check DTC on page DI–374.

YES → **Repair circuit indicated by the code output.**

NO ↓

2	**Check operation of the VSC warning indicator.**

PREPARATION:
(a) Connect the LEXUS hand–held tester to the DLC3.
(b) Turn the ignition switch ON and push the LEXUS hand–held tester main switch ON.
(c) Select the ACTIVE TEST mode on the LEXUS hand–held tester.

CHECK:
Check if the display of "CHECK VSC" (VSC warning) can be shown or turned off on the multi–information display by the LEXUS hand–held tester.

OK → **Check ENG ± signal circuit and ECM.**

NG ↓

3	**Check for open circuit in harness and connector between terminal VSCW of ABS & TRAC & VSC ECU and combination meter (See page IN–32).**

NG → **Repair or replace harness or connector.**

OK ↓

Fig. 3-6

The BE Section of the Repair Manual provides some more examples.

Troubleshooting Flow Charts: "1 Radio - No Power Coming In" and "Power Window Control System"

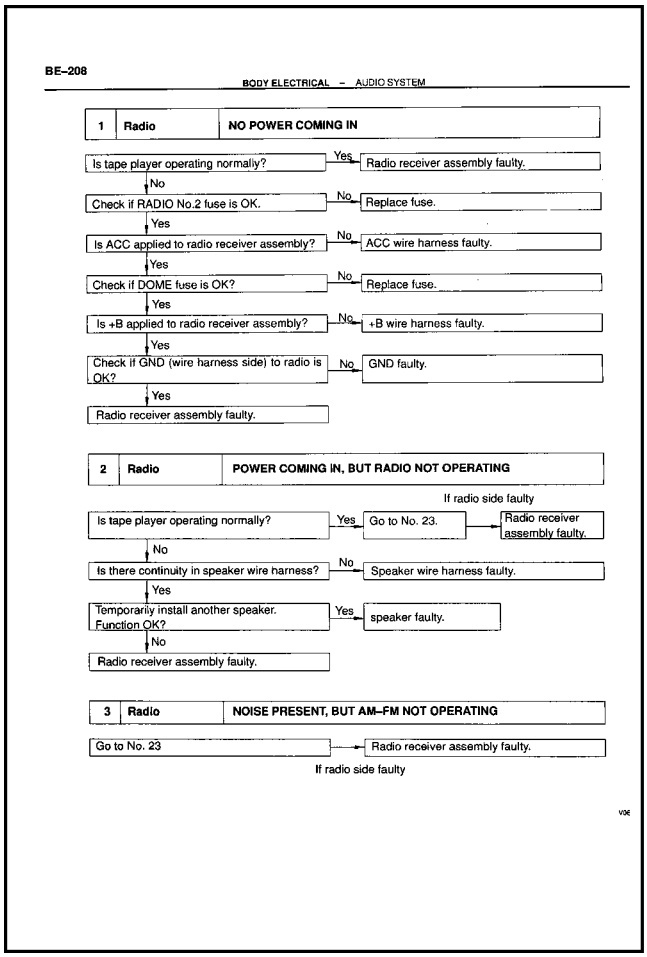

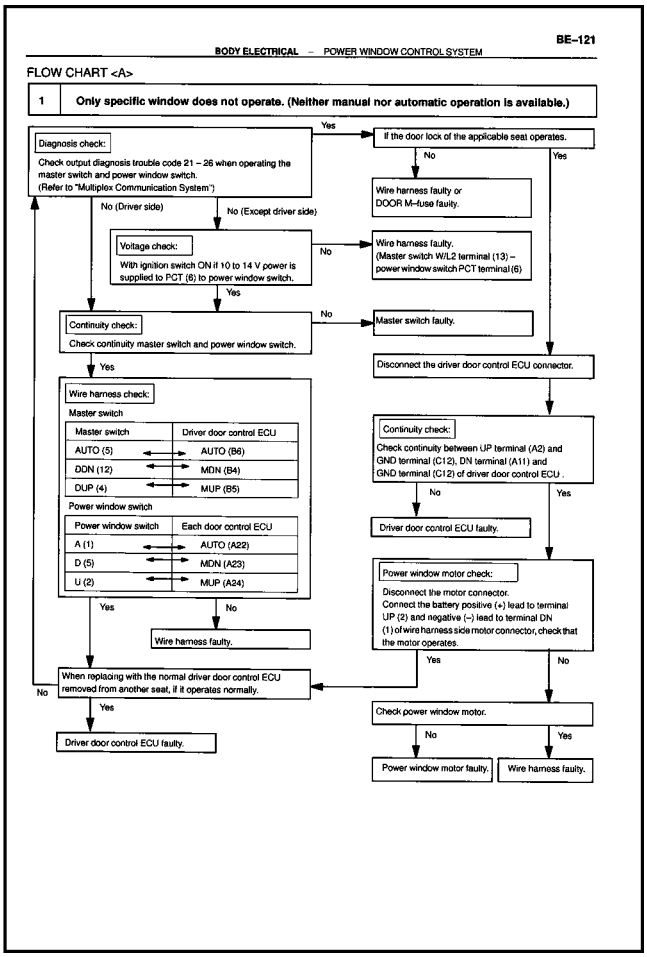

Fig. 3-7

Developing a Diagnostic Flow Chart

As a Lexus technician, you should develop skills interpreting these troubleshooting trees as they are used extensively in the Repair Manual to assist you deduce the root cause of a problem. They provide an easy to follow logical approach to problem solving. They will assist you to effect repairs and assure that you do not inadvertently miss something during the course of the repair.

An additional advantage to developing skills using the troubleshooting tree is that after you have identified a repair problem, you can use it as you devise a plan of action to correct the problem. The quality of the troubleshooting tree is not important. Do not waste time with perfect rectangles and straight lines. The advantage to using your own troubleshooting tree is:

- It will assist you to deduce the root cause of a problem
- It will serve as a reflection (or snapshot) of those actions that have already been verified during the course of your repair and assure that you do not inadvertently miss something
- It can be used as an excellent reference and avoid unnecessary steps or repeated errors should you be questioned later as to what you did on the vehicle or should the vehicle come back with the same problem

  1. Start by writing the problem down.
  2. Then make a list of the first action you intend to take to correct the problem. If it's an action, put it in a rectangle. If it's a decision, write it in a diamond.
  3. Draw lines leading to the diamond to indicate the previous action, from the diamond to indicate alternative actions, and (if applicable) lines looping back to some earlier point in the repair procedure.

If you develop skills with this form of notation, it will become easier than writing long comments on the back of the Repair Order and will save you time and money should the vehicle come back or an should an explanation of the repair be necessary at a later time.

Repair Orders

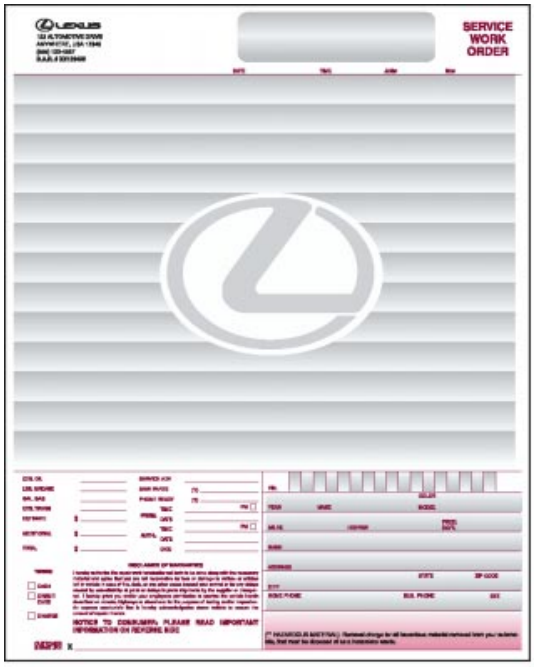

Repair Order Front Side

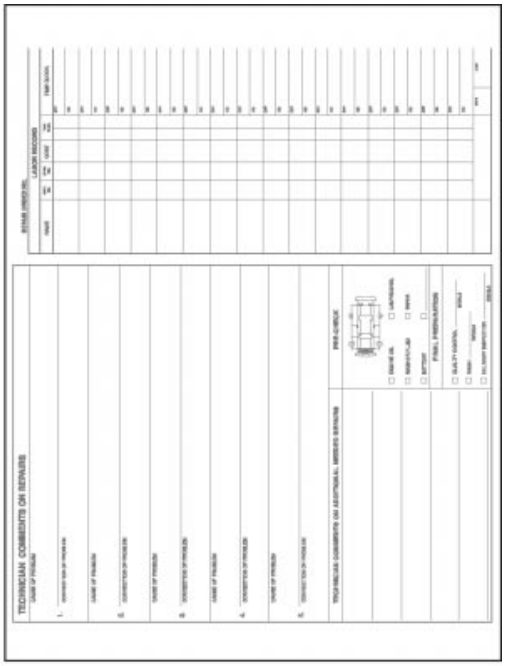

Repair Order Back Side

Fig. 3-8

Repair Orders

The Repair Order is an important document in the dealership. It provides all of the information about the customer, the vehicle, the problem, the parts required to repair the problem, and the cost of the repair, as well as, the inspections, actions, and determinations made during the course of the repair.

It is paramount that you are as articulate and detailed as is possible when documenting your work on the repair order. It is a legal document and should be treated as such.

Document all inspections conducted, all components replaced, and any specifications applicable to the repair on the backside of the repair order. Your comments are also very important to clarify anything that requires further explanation. If you become proficient at documentation using a troubleshooting tree approach, it will enhance your explanation and provide a simplified, easy to read, visual representation of your repair efforts and will clearly illustrate the decisions involved during the course of the repair.

Electronic Product Report System

Product reports provide a communications link between you and the TMC engineers in Japan. Through the Electronic Product Report System, you can **directly** notify Lexus Area Office District Technical Managers (DTMs) and TMC of current product conditions or customer concerns that you are seeing. This direct communication to TMC allows them to make improvements quickly.

When to Submit a Product Report

Electronic Product Reports should be submitted for product quality issues such as:

- Conditions initially encountered on new/recent models.
- Having potential safety or emissions implications.
- Where less than expected service life is encountered.
- Conditions which are known, and under investigation, but increasing in volume or severity.
- Generating unusually high numbers of warranty claims.
- Are characteristics of normal design operation, function, appearance, etc. yet causing significant customer dissatisfaction?
- Where published information such as *Repair Manual* procedures & diagnosis, *New Car Features Book* or *Owner's Manual* information, field fix instructions or production change data, etc., has errors, is not clear or does not fix a particular problem.

Electronic Product Report

Fig. 3-9

Parts of an Electronic Product Report

The information in an EPR contains the same "who-what-when-where" information you used in the six-step diagnostic process. With a product report, all of the information is put into a uniform "formal" report:

- **Product Report# –** This number is assigned automatically by the computer after you validate the report.
- **Originator –** Enter your name, not the dealership name or dealer code.
- **Vehicle ID# –** Enter the vehicle identification number (VIN)
- **Miles –** Enter the mileage on the date of repair with 6 digits (for example, 346 miles = 000346).

Parts of an Electronic Product Report

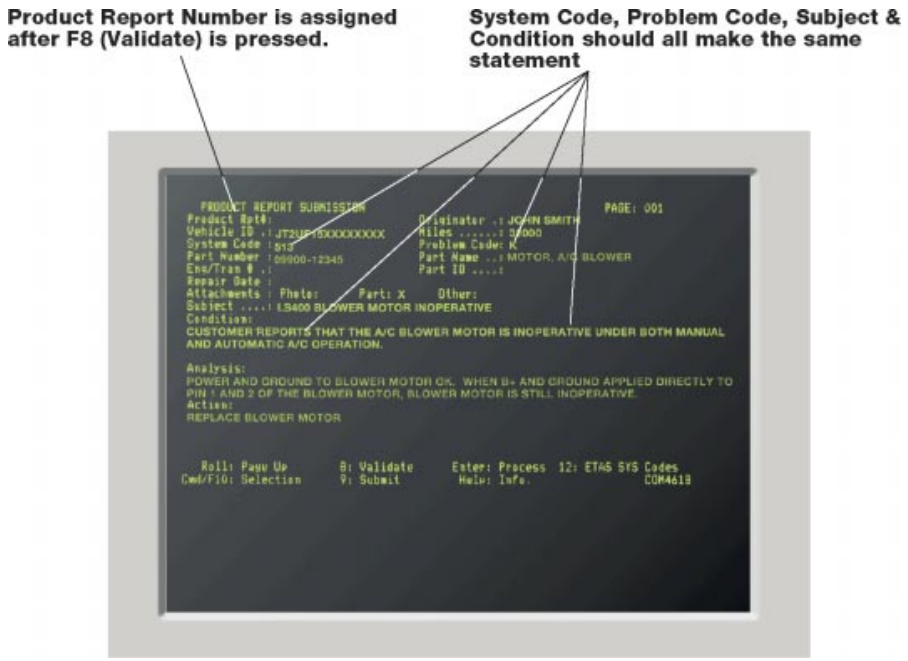

Fig. 3-10

- **System & Problem Code –** The system code and problem code are taken from the "Technical Assistance Quick Reference Card" and is duplicated in the *Appendix* of this handbook. Choose your system and problem codes based on the "subject" and "condition." The **System Code**, **Problem Code**, **Subject**, and **Condition** should all make the same statement.

System and Problem Codes

TAS Component & Problem Codes

100	Engine	170	Valve Train	270	Electronic Controls		
101	Block	171	Camshaft	271	Transmission ECU (ECT)		
102	Head/Gasket	172	Timing Belt/Chain/Gears	272	Transmission Solenoids		
103	Timing Cover/Pulley	173	Intake Valves	273	Other Sensors/Relays/Switches		
104	Oil Pan/Dipstick/Filler Cap	174	Exhaust Valves	275	Temperature Sensor		
105	Valve Cover	175	Lifters/Lash Adjusters	276	Speed Sensor		
106	Crankshaft/Balance Shaft	176	Rocker Arms/Shafts	277	Idle Speed Control Valve (ISCV)		
107	Pistons/Rods						
108	Bearings/Seals	180	Lubrication/Cooling	310	Steering		
109	Seals Shaft	181	Oil Pump	311	Steering Wheel/Column/Lock		
		182	Oil Filter	312	Steering Rack/Gear Box		
110	Starting/Charging	183	Fan Belt	313	Linkage/Tie Rods/Steering Stops		
111	Battery/Cables	184	Thermostat	316	Power Steering Pump/Lines		
112	Starter	185	Water Pump	315	Power Steering Belt		
113	Ignition Switch/Key Cylinder	186	Hoses	316	Wheel Alignment		
114	Neutral Safety Switch	187	Radiator/Cap	317	Electronic Steering Controls		
115	Alternator	188	Cooling Fan				
116	Voltage Regulator	189	Coolant Reservoir/Overflow Tube	320	Front Suspension		
117	Other Charging Parts			321	Springs/Torsion Bar		
118	Drive Belt	190	Engine Electronic Controls	322	Shocks/Struts		
		191	Engine ECU/ECM	323	Control Arms/Links		
120	Ignition/Glow	192	Air Flow Meter/MAP Sensor	324	Bushings		
121	Distributor/Coil/Igniter	193	Oxygen Sensor/Relays	325	Stabilizer Bar		
122	Spark Plug Wires	194	Other Engine Sensors	340	Electronic Suspension Controls		
123	Spark Plug	195	Diagnostic Equipment/Codes				
124	Primary Wiring	196	Oil Sending Unit	330	Rear Suspension		
125	Cap/Rotor	197	Air/Coolant Temp. Sending Unit	331	Springs		
126	Glow System (Diesel)	198	Knock Sensor	332	Shocks/Struts		
				333	Control Arms/Links		
130	Fuel System	210	Transmission (Automatic)	334	Bushings		
131	Fuel Tank/Gas Cap/Sending Unit	211	Case/Pan/Gaskets/Dipstick	335	Stabilizer Bar		
132	Fuel Pump/Pressure Regulator	212	Torque Converter/Flex Plate				
133	Fuel Lines	213	Oil Pump	350	Brake System		
134	Fuel Filter	214	Valve Body	351	Brake Pedal/Linkage		
135	Fuel Injectors	215	Planetary Gear Sets	352	Front Disc Brake Assembly		
136	Diesel Injection Pump	216	Input/Output Shafts/Counter Gears	353	Rear Disc Brake Assembly		
137	Diesel Injectors	217	Friction Parts	354	Rear Drum Brake Assembly		
138	Cold Start Switch/Injectors	218	Shift Levers/Linkage	355	Parking Brake/Cable		
		219	Bearings/Seals	356	Master Cylinder/Lines/L.S.P.V.		
140	Intake/Induction			357	Power Booster		
141	Intake Manifold	220	Transmission (Manual)	358	ABS (Anti-Lock Brake System)		
142	Carburetor	221	Clutch/Pressure Plate	359	Traction Control System		
143	Air Cleaner/Filter/Housing	222	Case/Pan/Gaskets				
144	Turbo/Supercharger	223	Gear Sets	360	Wheels and Tires (O.E.M.)		
145	Throttle Body/Gas Pedal	224	Input/Output/Counter Shafts	361	Alloy Wheels		
146	Intercooler/Hoses	225	Synchronizers/Hubs	362	Steel Road Wheels		
147	Throttle Linkage	226	Shift Levers/Linkage	363	Tires		
148	Ducts/Hoses	227	Bearings/Seals	364	Wheel Covers/Caps/Trim		
		228	Flywheel/Flex Plate	365	Spare Tire/Jack Assembly		
150	Exhaust	229	Clutch Hydraulic System/Lines	366	Wheel Locks/Weights/Lug Nuts		
151	Exhaust Manifold						
152	Exhaust Pipes	230	Transfer Case	370	Spindles/Bearings/Hubs		
153	Muffler/Resonator	231	Case/Pan/Gaskets	371	Spindles/Stub Axle		
154	Tail Pipe	232	Gear Sets	372	Wheel Bearings		
155	Heat Shield	233	Input/Output/Counter Shafts	373	Front Hubs		
156	Bolts/Brackets	234	Shift Levers/Linkage	374	Rear Hubs		
157	Joints/Gaskets	235	Bearings/Seals				
				400	Body		
160	Emissions	240	Driveline	401	Frame/Crossmember/Skid Plate		
161	OCO (Catalytic Converter)	241	Driveshaft	402	Cowl Panel/Firewall		
162	EGR Valve	242	Differential/Housing/Locking Sys	403	Roof		
163	PCV Valve	243	Axles	404	Front Fenders		
164	EVAP System/Charcoal Canister	244	Bearings/Seals/Gaskets	405	Rear Quarter Panels/Fuel Door		
165	Air Injection/Suction	245	Propeller Shaft	406	Floor Pan/Rocker Panel		
166	Vacuum Lines/Valves/Hoses	246	CV Joints/Boots	407	Back Panel		
169	Other Emissions Components	247	Double Cardin Joint	408	Grille/Bumpers		
		255	Locking Hubs/A.D.D.	409	Exterior Trim/Moldings		

410	Doors and Components	490	Rust	560	Accessories (O.E.M.)
411	Left/Right Doors	491	Undercarriage Rust	561	Cruise Control
412	Hood/Release/Support Arm/Struts	492	Structural/Panel Rust	562	Electronic Trip Computer
413	Trunk Lid/Compartment/Liftback	493	Appearance/Surface Rust	563	Clock
414	Window Regulators/Handles	494	Chrome/Bumper Rust	564	Theft Deterrent System/Remote
415	Door Hardware/Locks (incl. Power)	495	Body Moldings/Trim Rust	565	Heated Rearview Mirror
416	Power Windows/Motor/Switch			566	Cellular Phones
417	Trunk & Fuel Door Release Levers	490	Convertible Top	567	Tilt/Telescopic Mirror
418	Keys	491	Fabric Top		
419	Door Seals/Weather Strips	492	Supports/Bows	570	Wiring Harness
		493	Motor/Electrical Parts	571	Engine Harness
420	Sunroof/Moonroof (O.E.M.)	494	Pump/Hydraulic Parts	572	Cowl Harness
421	Panel/Glass	495	Sensors/Relays	573	Instrument Harness
422	Headliner/Fabric	496	Boot	574	Front Body Harness
423	Motor/Cables	497	Rear Window	575	Rear Body Harness
427	Sport Roof/T-Tops			576	Fuse/Fusebox/Circuit Breaker
428	Seals/Weather Strips	610	Heat/Air Conditioner (O.E.M.)	577	Switches/Relays
429	Control Switch	507	Expansion Valve		
		508	Vents/Outlets	600	Accessories
430	Seats/Seatbelts	509	Airflow & Temperature Controls	601	Gold Package
431	Seat Trim/Upholstery	511	Heater/Core	602	Wind Deflector
432	Seat Adjusters/Lumbar Support	512	Hoses/Water Valve	603	Mudguards
433	Seat Frame/Seat Track	513	Blower Motor/Fan	604	Trailer Hitch/Towing Equipment
434	Headrest	514	Compressor/Clutch Belt	605	Tonneau Cover
435	Lap Belts/Buckles/Receptors	515	Condenser/Evap/Receiver/Dryer	606	Sliding Rear Window
436	Three Point Belts	516	Refrigerator Components (Van)	607	Brush Guard
437	Automatic Shoulder Belts/System	518	Elec. Controls/Sensors/Relays	608	Running Boards
438	SRS/Airbag/Sensors	519	Defroster/Defogger	611	Truck Bumpers
439	Child Safety Seats/Restraints			612	Roof Racks
		520	Audio (O.E.M.)	613	Striping/Graphics
440	Interior Trim	521	Radio/Speaker/Amplifier	614	Shade/Window Tint
441	Dashboard/Instrument Panel	522	Tape Player	615	Outside Truck Mirrors
442	Headliner	523	Disc Player/Changer	616	Wheels/Rims/Covers/Caps/Locks
443	Carpet	524	Equalizer	617	Dack Rack (Trank Mounted)
444	Console/Cupholder/Lighter/Ashtray	525	Speakers	618	Car Cover
445	Glovebox/Security Lock	526	Antenna	619	Front-End Mask
446	Door Trim/Armrest	527	Audio Wiring	621	Clock/Compass/Navigational Equip
447	Quarter Trim	528	Anti-Theft System	622	Alarm System/Remote
449	Other Fixed Trim/Trunk Trim	529	Control Knobs/Buttons	623	Audio System/Equipment
449	Sun Visor/Vanity Mirror			624	Floor Mats
		530	Wiper/Washer	625	Air Conditioner
450	Track Bad	531	Wiper Motor	626	Seat Covers/Cushions
451	Bed Floor	532	Wiper Arm/Blade	627	Spoiler
452	Outer Panels	533	Wiper Motor/Bottle/Nozzle	628	Center Console/Armrest
453	Inner Panels	534	Rear Wiper Motor	629	Wood Grain Dash
454	Tailgate/Latch	535	Rear Wiper Arm/Blade	630	Cruise Control
455	Bedliner	536	Rear Washer/Motor/Bottle/Nozzle	631	Cellular Phone/Antenna
456	Tie Down Hooks			632	Sunroof/Moonroof
		540	Lights/Signals	700	Diagnostic
460	Glass	541	Headlights		
461	Windshield	542	Parking/Reverse Lights		Miscellaneous
462	Door Glass/Windows	543	Dome/Map/Interior Lights	920	Periodic Service/General Maint.
463	Fixed Side Glass	544	Dash/Instrument Lights	960	Incidentals
464	Rear Windshield	545	Brake Lights	961	Towing
465	Lift Back Glass	546	Fog/Driving Lights	962	Rental Vehicle
466	Quarter Glass	547	Horn	999	Track
467	Wind Wing/Vent Window	548	High Beams		
468	Glass Seals/Weather Strips	549	Turn Signals/Hazards		
469	Rear View & Outside Mirrors				
		550	Gauges/Warning Lights		
470	Paint	551	Speedometer/Odometer/Cables		
471	Hood	552	Tachometer		
472	Roof	553	Fuel Level Indicator		
473	Trank	554	Temp. Gauge/Warning Light		
474	Front Fenders	555	Oil Pressure Gauge/Light		
475	Rear Quarter Panels	556	Volt/Ammeter/Battery Light		
476	Doors	557	Oil Level Gauge/Light		
477	Spoiler	558	Other Indicators/Warning Lights		
478	Bumpers	559	Tripmeter		

LEXUS TECHNICAL ASSISTANCE QUICK REFERENCE CARD

PROCEDURE

NOTES

CODES

CODES (continued)

Fig. 3-11

- **Part Number –** A part number must be entered to submit a product report. If the exact part number is not available, select a closely related art number (e.g., acid rain damage: select a body panel part number).
- **Part Name –** Enter the part name taken from the Parts Catalog.
- **Engine/Transmission# –** Enter the appropriate number if the repair involved major engine or transmission work or a complete engine or transmission replacement, (e.g., LS 400 Eng# - 0010246, Trans# N 89FROO0857).
- **Part ID –** Enter the Part ID number from the parts screen.
- **Repair Date –** Enter the date of repair; month, day and year (e.g., June 7, 1996 = 06 07 96).
- **Attachments –** If you are sending a photograph, part, or other form of supporting evidence, enter an “X” in the appropriate space. Parts should be included whenever possible (See Appendix for Parts Recovery procedures).

Product Report Submissions

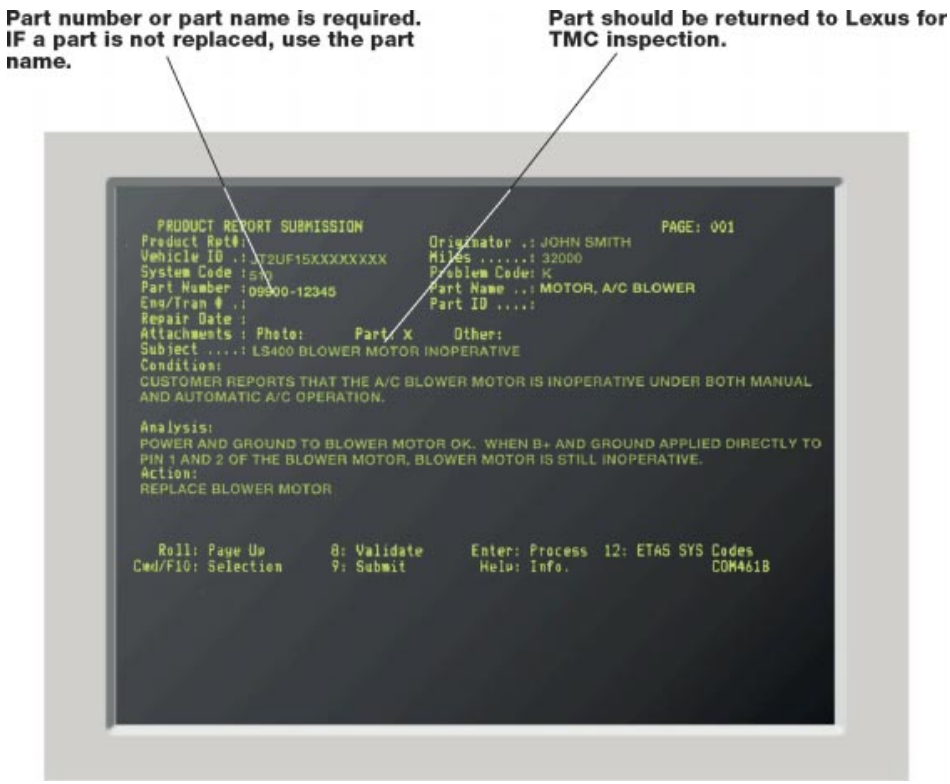

Fig. 3-12

- **Subject –** Enter the component or system involved and the problem symptom. Examples:
  - Steering wheel vibrates (311, V)
  - Cruise control disengages (561, K)
  - Engine will not start (120, K)
- **Condition –** Enter a detailed problem description, including who, what, when, and where (if applicable).

Examples of Condition Section

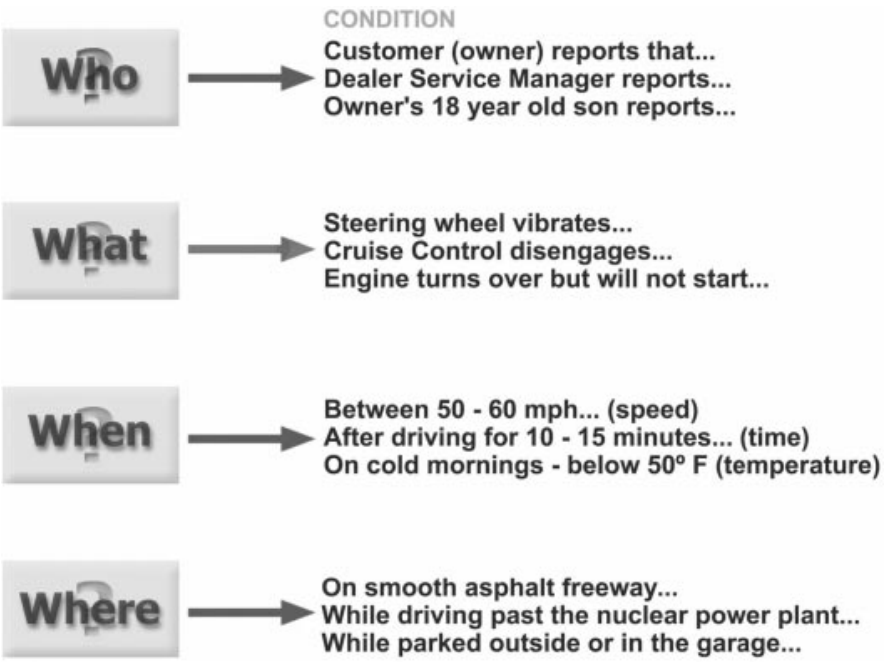

Fig. 3-13

- **Analysis –** Enter the probable cause based on your own investigation, being as specific as possible. If you don't know the cause, state this.

Examples of Analysis & Action Section

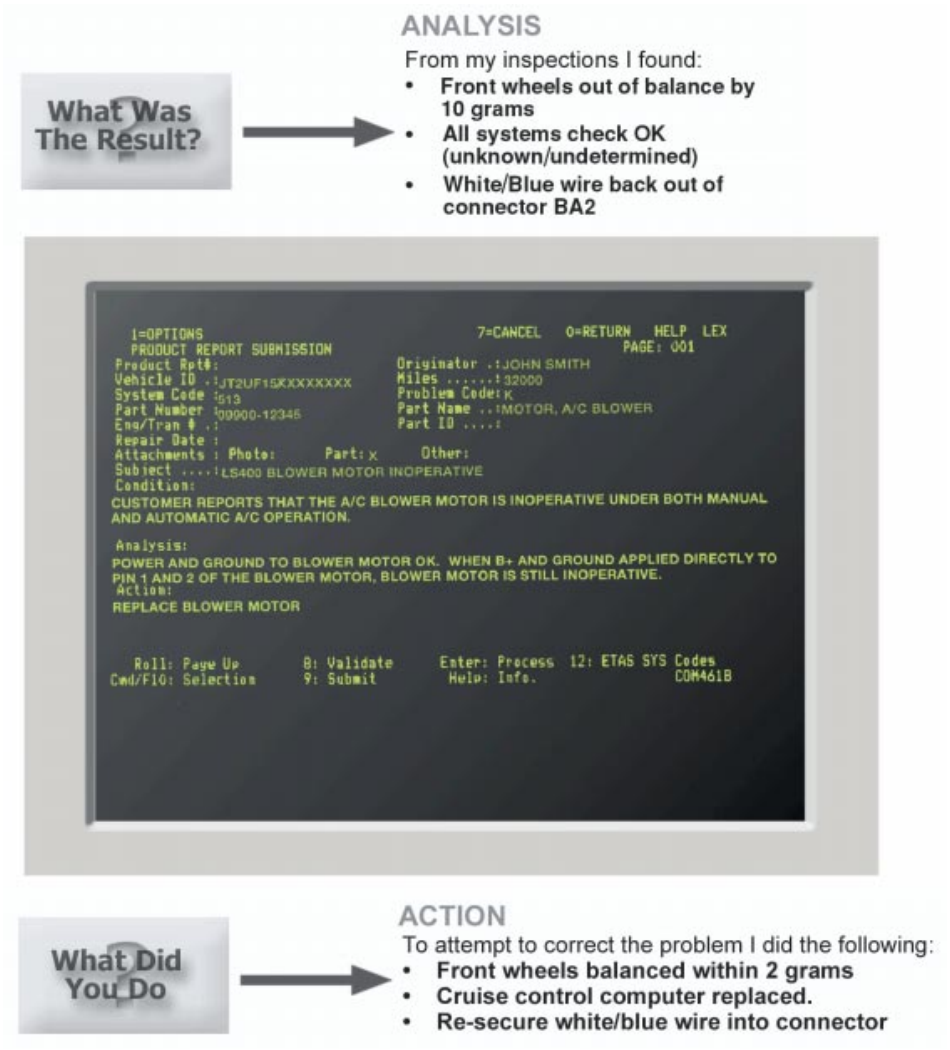

Fig. 3-14

- **Action –** Enter what you did to repair the malfunction. Be specific.
- **Results –** Press SHIFT and ARROW DOWN to see page two of the TDN screen. If your report does not require two pages, include the results under Action.

Examples of Results Section

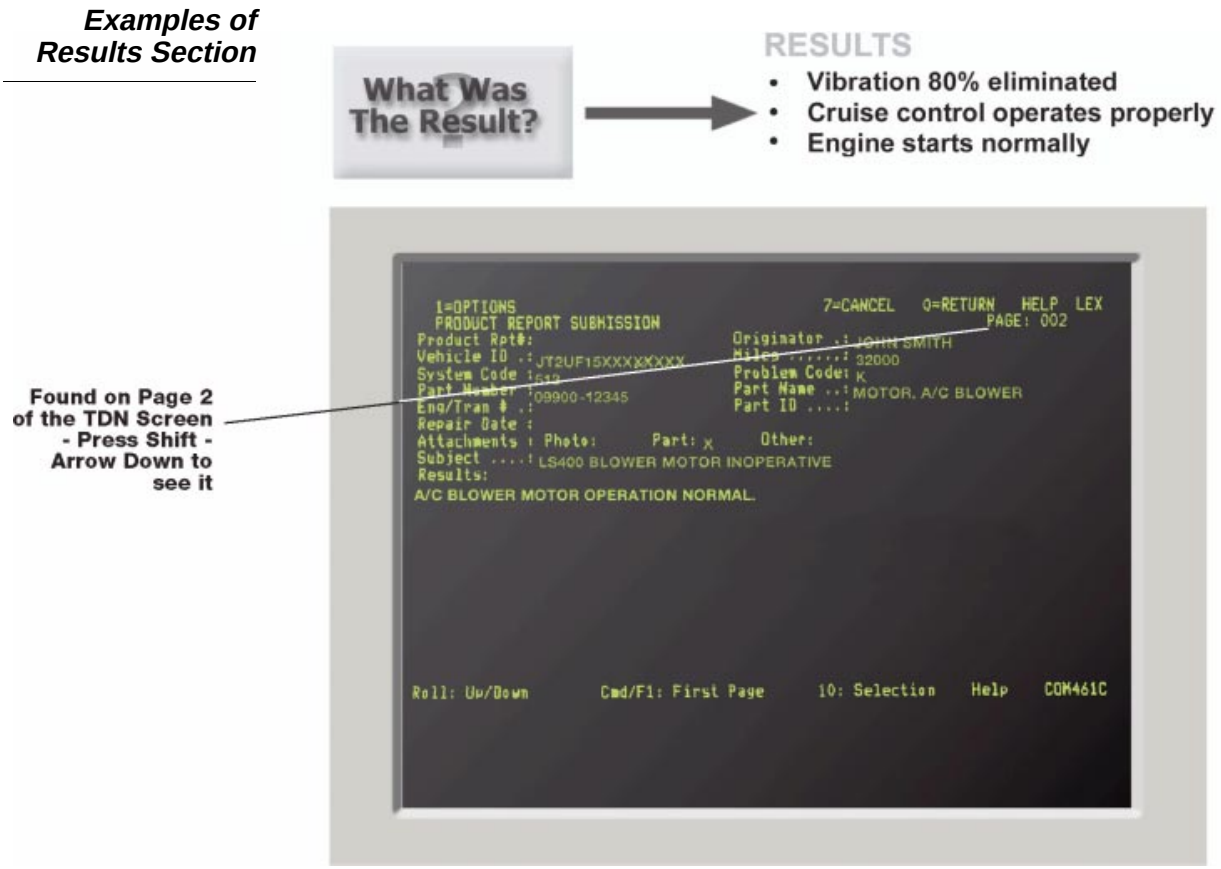

Fig. 3-15

When You Write an EPR

The EPR system is a very powerful tool by which you can personally and directly improve the quality of the Lexus product. However, you probably have also noticed that using this tool involves a lot of responsibility as well. When writing an EPR, there are several items that you need to watch for:

- **Correct Spelling, Punctuation, and Grammar –** Because of the computerized translation system used at TMC, the spelling, grammar and sentence structure are important. Use of non-SAE abbreviations or “creative”/slang technical language will delay the translation process for your report. Try to use short sentences when ever possible.
- **Improper Word Wrap –** Watch the screen as you’re typing-the computer will not automatically hyphenate the words when the end of the line is reached. You’ll need to manually add a “carriage return” so that the words stay together.
- **Be Objective –** Do not “hype” the symptoms of a problem–provide just the facts! Don’t include any conclusions that you cannot or have not confirmed.

Warranty Repair Documents and Repair Substantiation

The following is a brief explanation of some of the warranty documentation procedures that affect you in your dealership. This information will give you an introductory and general understanding of the proper documentation required to substantiate warranty repair.

A more detailed and complete explanation is available in the *Lexus Reference and Administrative Procedures Manual* available in your dealership. When any documentation is in question, please consult the Manual and follow the procedures outlined to assure recovery of warranty costs.

NOTE

Reference the illustrated examples provided while reviewing the material.

Providing Measurements and Readings

To determine whether a component or part requires adjustment or replacement, it is at times necessary to take measurements or readings "BEFORE" the actual work can begin. In those instances, the technician must write, clearly and legible, the measurements or readings on the back of the repair order hard copy, identifying them with the word "BEFORE."

Some repairs and adjustments require measurements or readings after the work was completed to confirm that the work was properly done. In these instances, the technician must write, clearly and legibly, the measurements or readings on the back of the repair order hard copy, identifying them with the work "AFTER."

Any time the equipment that was used to determine the "BEFORE" and/or "AFTER" measurements or readings has printing capability, a copy of the printout generated by the equipment must be attached to the repair order hard copy. Below are examples where appropriate "BEFORE" and "AFTER" measurements or readings, must be provided by the technicians:

Lateral run-out of tires
Radial run-out of tires
Lateral run-out of wheels
Radial run-out of wheels
Lateral run-out of brake discs
Parallelism of brake discs
Brake drum run-out
Toe-in
Camber
Caster
Engine compression pressure
ATM pressure test
Engine analyzer
Emission test
MIDTRONICS tester "warranty code"
Battery open circuit voltage
Battery state charge

Technicians' Daily Time Ticket Form

Repair times of warranty repairs must be substantiated by the technicians on three-piece technicians' Daily Time Ticket forms. The form must fulfill the following requirements:

- Three-piece, with the top copy providing individual “flag stickers”
- “Flag stickers” with space for:
  - Repair order number
  - Technician’s employee number
  - “ON” & “OFF” time clock imprints
  - Flat rate time
  - Straight time

Required use of Time Clock

All repair times of warranty repairs must be substantiated by the technicians with properly executed time clock imprints on three-piece technicians’ Daily Time Ticket forms. The time clock must provide imprints showing the day, month, hour, and tenths of an hour.

Time clock imprints printed directly on the back of the repair order hard copy or on the front of it are not acceptable. The procedures for substantiating repair times apply to all technicians, regardless whether they are paid “by flat rate hour,” “hourly,” or “by salary.”

Punching of Flat Rate Time Operations

The technician must use the time clock to substantiate the repair time for the work performed by him. The following information must be indicated in the appropriate boxes of the flag sticker of the Daily Time Ticket form:

- “ON” time clock imprint when the work assignment is begun
- “OFF” time clock imprint when the work assignment is completed
- Repair order number & technician employee number
- FLAT RATE TIME for the repair operation or adjustment that was performed, as shown in the *Lexus Flat Rate Manual*. The assistant service manager is to determine the appropriate operation code, combination code, and flat rate time for the technician once the repair has been completed

Time Punching of “Other 99” Operation

For repairs that require the use of an “Other 99” operation code, Lexus reimburses the dealership for the ACTUAL TIME spent by the technician to carry out the work. Only those repairs for which no basic operation code is given in the *Lexus Flat Rate Manual* can be claimed with an “Other 99” operation code.

The technician is required to substantiate the repair time for an “Other 99” operation in the following manner:

- For each “Other 99” operation, the technician must use a SEPARATE flag sticker
- The flag sticker must contain properly applied “ON” and “OFF” time clock imprints for substantiating the elapsed repair time

- Determine the elapsed repair time and enter it on the flag sticker in the box entitled “STRAIGHT TIME” (Some daily time tickets use the terms “Repair Order Time” or “Elapsed Time” instead).
- The “Other 99” operation code that applies to the repair or adjustment must be written on the flag sticker or directly next to it. This will enable the warranty administrator to identify the correct repair time for the corresponding warranty claim

“Other 99” operation codes MUST NOT BE USED if the *Lexus Flat Rate Manual* contains an operation code with a corresponding flat rate time for the work that was carried out by the technician.

Time Punching of Combination “Z” Code Operations

For repairs that require the use of Combination Code “Z,” code, Lexus reimburses the dealership for the ACTUAL TIME spent by the technician to carry out the additional, unforeseen repair.

Only the following type of work can be claimed with a Combination Code “Z”:

- An additional repair operation that is carried out IN CONNECTION with a Basic Operation for which there is no assigned combination code in the *Lexus Flat Rate Manual*
- The removal and reinstallation of “Lexus-Approved” and “Lexus-Supplied” optional equipment is carried out IN CONNECTION with a basic repair operation listed in the *Lexus Flat Rate Manual*

The technician is required to substantiate the repair time for the Combination Code “Z” in the following manner:

- For the Code “Z,” the technician must use a SEPARATE flag sticker
- The flag sticker must contain properly applied “ON” and “OFF” time clock imprints for substantiating the elapsed repair time
- Determine the elapsed repair time and enter it on the flag sticker in the box entitled “STRAIGHT TIME.” (Some daily time tickers use the terms “Repair Order Time” or “Elapsed Time” instead.)
- Write the words “Z Time” on the flag sticker or directly next to it. This will enable the warranty administrator to identify the correct repair time for the corresponding warranty claim
- Write the description of the work for which the Combination Code “Z” repair time is claimed directly adjacent to the flag sticker which substantiates the “Z Code” repair time. This is essential since the warranty administrator is required to provide the explanation on the warranty claim that is submitted to Lexus

Combination Code “Z” time MUST NOT BE USED by the technician and/or the assistant service managers to add diagnosis time to a Basic Operation or to respond to a technician’s dissatisfaction with repair times provided in the *Lexus Flat Rate Manual*.

Time Punching of Multiple Warranty Repairs on One Repair Order

If a repair order contains two or more warranty repairs, each with a different FLAT RATE OPERATION CODE, each warranty repair must be substantiated with its own flag sticker. The flag sticker must contain properly applied “ON and “OFF” time clock imprints, the repair order number, the employee number, and the flat rate time for the work that is substantiated by the single flag sticker. In addition, the operation code for each of the repairs must be written on, or next to, the single flag sticker.

Policy

Should a technician inadvertently forget to apply the “ON” or the “OFF” time clock imprint to a flag sticker, the technician must proceed as follows:

- Technician must advise the service manager of the situation
- Service Manager has to write in, by hand, the missing time as stated by the technician
- Service Manager must indicate the following details next to the hand written time entry: “ON” Time Approved or “OFF” Time Approved, Date, and Full name of the Service Manager

Defect and Repair Description Provided by THE TECHNICIAN

The technician is required to document the repair work or adjustment by writing on the back of the repair order hard copy in his own words the following:

- The DESCRIPTION of the defect or malfunction as determined by the technician
- The IDENTIFICATION of the part or component that failed or caused the malfunction by obtaining the part number of the failed part from the parts counter person at the time the replacement parts are picked up
- The DESCRIPTION of the repair work that was done to correct the defect or malfunction

An operation name and/or operation code or a T-1 and a T-2 Code, as those used in the *Lexus Flat Rate Manual*, are not acceptable substitutes for a detailed description of the defect, malfunction, and repair work.

In cases where the technician determines that there is no defect or malfunction as indicated by the customer complaint statement, or where the reported malfunction could not be duplicated, the technician must indicate these findings on the back of the repair order hard copy.

Procedures for Proper Documentation

Additional defects or malfunctions discovered by a technician while working on a vehicle must not be repaired or corrected by the technician without the Service Manager's involvement. Repairs must be documented, verified, and authorized as follows:

- The technician writes a description of the problem that has been discovered on the back of the repair order hard copy and reports to the Service Consultant
- The Service Manager must be informed of the situation and the customer must be contacted to receive approval prior to performing additional work
- If the customer gives approval to do additional work, the Service Manager must authorize the additional work by adding to the technician's notation: "O.K. to repair under warranty," the Service Manager's initials, and the day's date
- All requirements concerning use of time clock, flag sticker, "Other 99" operation code or Combination Code "Z," and the technician's defect and repair description must be observed by the technician
- In those cases where the service consultant was unsuccessful in contacting the customer by phone to obtain approval for the additional work, a notation explaining the situation, along with the service consultant initials, the time of the day and the day's date, must be added to the back of the repair order hard copy

For Dealerships Using an Electronically Printed Invoice

When the vehicle is picked up, the customer must acknowledge the additional work by signing all copies of the invoice next to the statement describing the additional defect.

For Dealerships Using a Handwritten Repair Order

At the time the service consultant closes out the repair order, the description of the additional defect or malfunction must be transferred to the original of the repair order to ensure completeness of the repair documentation on all copies of the repair order (e.g., soft copies and hard copy).

When the vehicle is picked up, the customer must acknowledge the additional work by signing all copies of the repair order next to the statement describing the additional defect.

Warranty

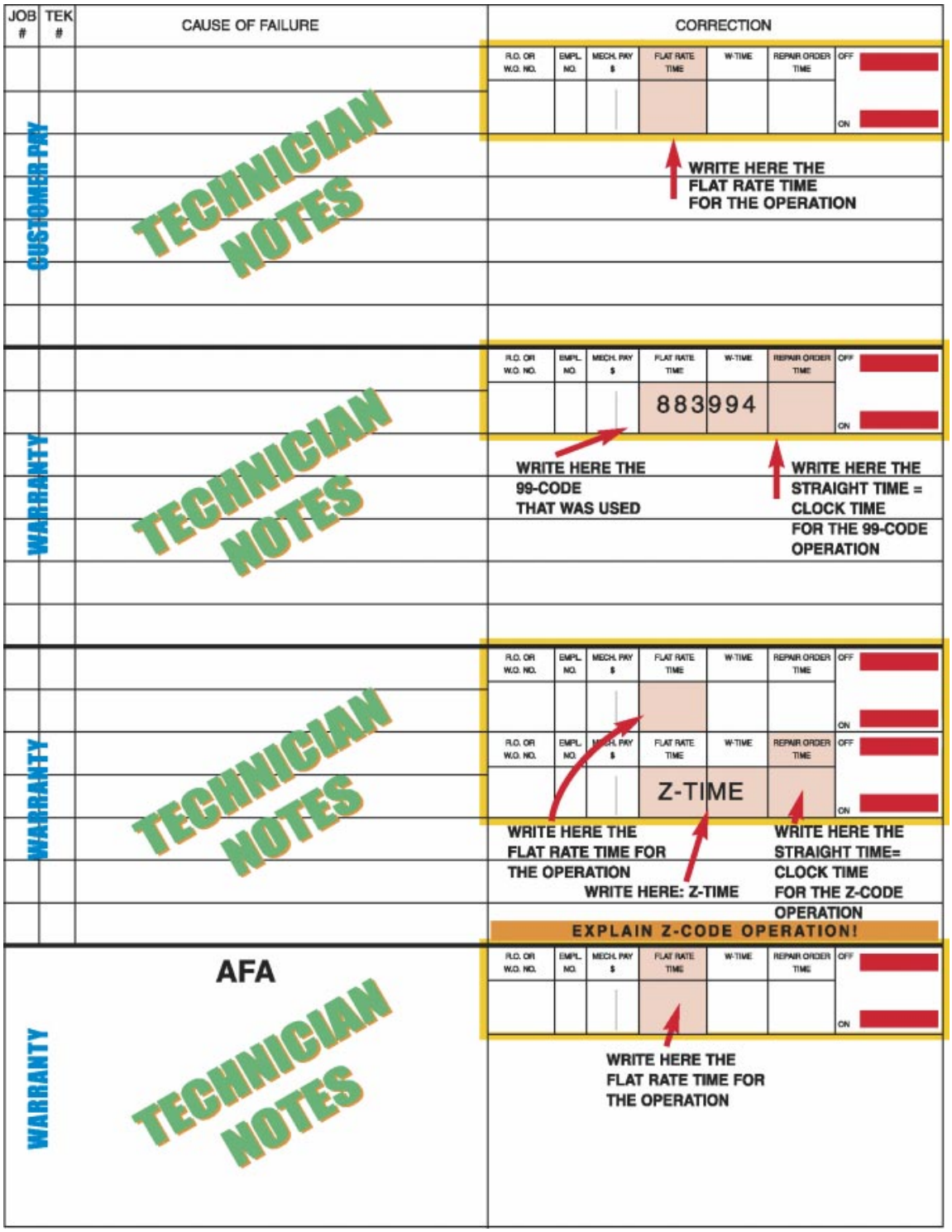

Fig. 3-16

Warranty CCR

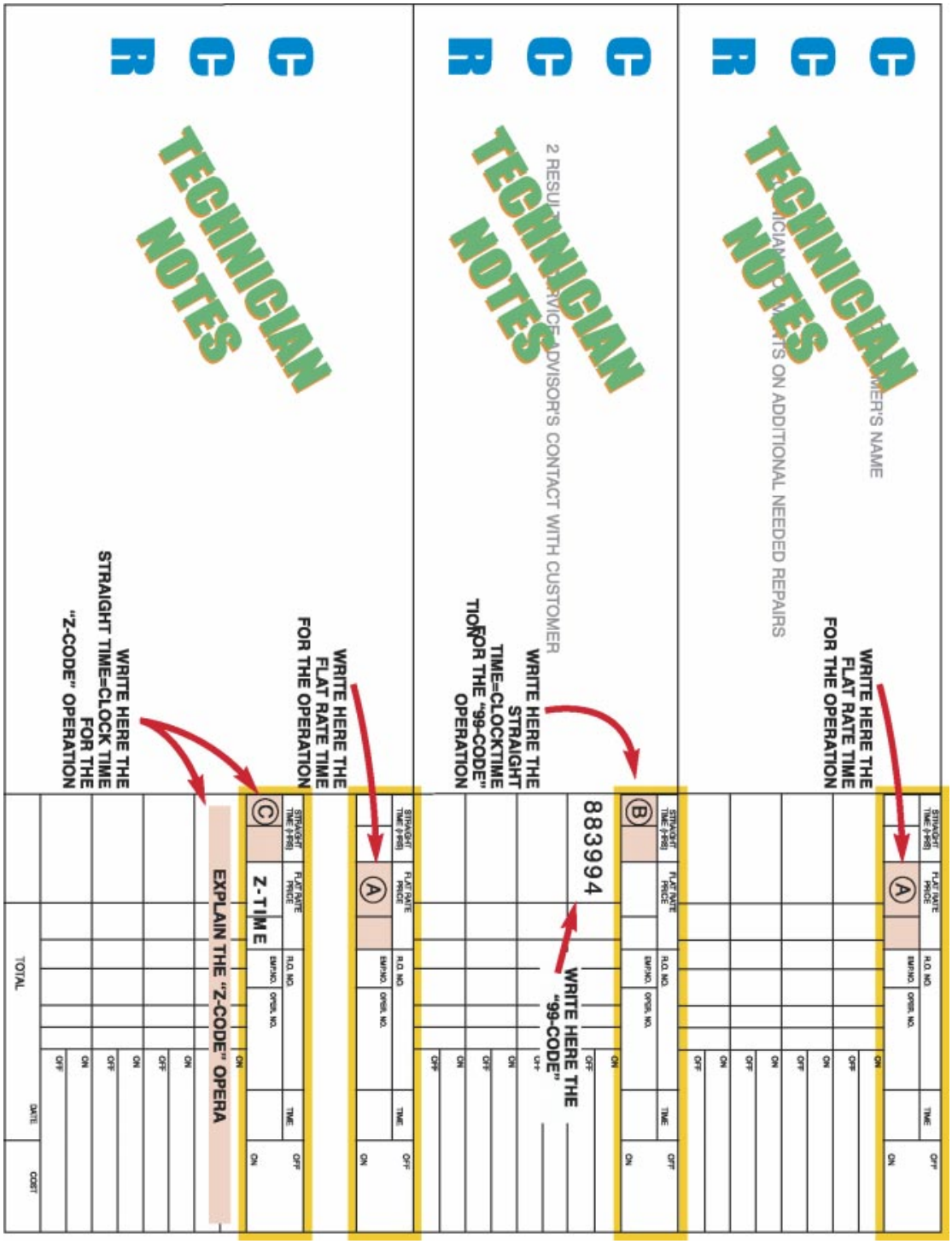

Fig. 3-17

SYSTEMS & TOOLS ASSOCIATED WITH PDS

Battery Testing State of Charge

During PDS, you are asked to check the battery "state-of-charge" to determine if the battery is charged and to what extent. As indicated in the PDS Manual, check the electrolyte level and visually inspect the battery terminals and battery posts for anything that may cause resistance.

State-of-charge test checks the battery's chemical condition. A hydrometer is an accurate method used to measure the specific gravity (density or strength) of the electrolyte.

Checking Specific Gravity using a hydrometer

Electrolyte is a colorless refined sulfuric acid that is diluted with distilled water. The solution contains about 35% sulfuric acid and the rest is distilled water. The sulfuric acid of the electrolyte enters into chemical reaction with active material in the battery plates to produce voltage and current. The specific gravity of electrolyte is normally around 1.260 at 20°C (68°F).

The specific gravity changes as the battery is charged and discharged because the sulfuric acid combines with the plate material of the battery during discharge and is liberated from the plates during charging. The amount of sulfate in the electrolyte of the battery is determined by its specific gravity.

If the specific gravity of electrolyte is around 1.260 at 20°C (68°F) under fully charged conditions, the electrical conductivity (ratio of chemical reactions with the plates) will be maximum. It will decrease if the specific gravity goes above or below that value.

In general, the higher the battery's specific gravity, the more fully it is charged. If the specific gravity goes below 1.260 at 20°C (68°F), the electrolyte will tend to freeze and cause sulfating.

The specific gravity of electrolyte is measured using a Hydrometer. Hydrometers (float-type or plastic ball-type) are composed of a glass tube with a rubber suction bulb at the top, and a rubber pickup tube at the bottom. The rubber bulb is squeezed and the hydrometer is inserted into the cell of a battery. When the bulb is released, electrolyte is drawn into the tube of the hydrometer.

- In the float-type hydrometer, a calibrated float rises inside the glass tube which indicates the specific gravity reading depending upon how high the float rises above the level of the electrolyte.
- In the plastic ball-type hydrometer, small plastic balls rise (float) inside the glass tube which indicates the specific gravity based upon how many plastic balls float up to the top of the electrolyte in the tube.

Hydrometer

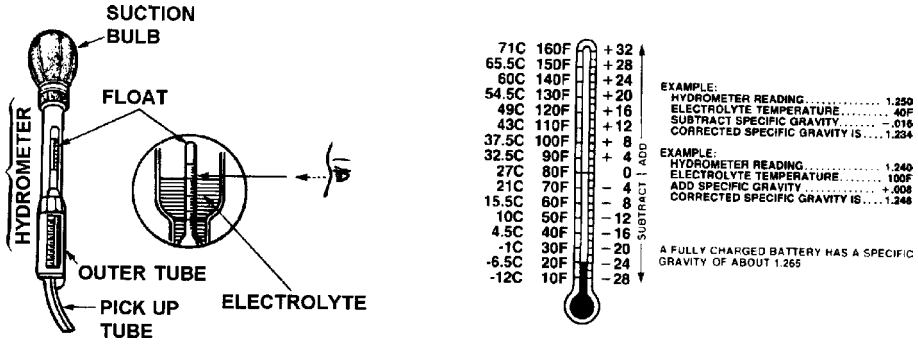

Fig. 4-1

The specific gravity of the electrolyte will also vary with the battery temperature. As a result, a correction to the reading may need to be made to accommodate the temperature of the electrolyte. Usually the hydrometer corrections are only made if there is a significant difference between the temperature of the electrolyte and that of normal battery electrolyte.

Battery Ratings

There are several different ways to rate batteries. Most ratings indicate the capability of the battery to provide a specific amperage for a given period of time and temperature without the voltage dropping below a designated point.

Group Size identifies the battery in terms of its length, width, height, terminal design and other physical characteristics to provide a guideline that corresponds to the amount of space designed in the engine compartment to accommodate the battery.

Cold Cranking Current (CCA) is a rating which indicates, in amperes, the discharges load a fully charged battery can deliver at 0°F (-18°C) for 30 seconds and still maintain a battery voltage of 1.2 per cell or higher.

The Reserve Capacity (RC) rating of a battery indicates the number of minutes the battery can produce 25 A and still have a battery voltage of 1.75 V per cell or 10.5 volts for a 12 volt battery.

Amp-Hours (AH) or 20-hour discharge rating, specifies in amp-hours, the current the battery can provide for 20 hours at 80°F (26.7°C) while maintaining a voltage of at least 1.75 volts per cell. Example: A battery that can deliver 4 amps for 20 hours is rated at 80 amp-hours.

Minimum Voltage Testing and Specifications (Open Circuit Voltage)

Testing open circuit voltage with no load using a digital volt/ohm meter (DVOM) is the method used to determine minimum voltage. A DVOM is connected to the battery (red lead, positive terminal [+]; black lead, negative terminal [-]). The headlights are turned to the ON position for 1 minute (to remove the surface charge of the battery) and then a voltmeter reading is taken. Reference the chart to the below which provides general guidelines for this test.

Open Volt Test

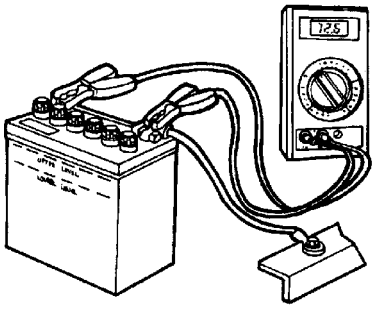

Compare measured voltage to open circuit voltage chart:

OPEN CIRCUIT VOLTAGE (OCV) CHART

RESULTS	OPEN CIRCUIT VOLTAGE	% STATE OF CHARGE	EQUIVALENT SPECIFIC GRAVITY
OK	12.65 Volts	100%	1.265 @ 80°F
	12.40 Volts	75%	1.225 @ 80°F
NG	Less Than 12.40 Volts	< = 50%	1.190 @ 80°F

Fig. 4-2

The methods indicated above are accurate, however whenever possible, Lexus recommends testing the battery using the MICROPRO 815 Digital Battery Analyzer which should be available in your dealership.

Battery Tester

Fig. 4-3

Conductance Testing

The Midtronics MicroPro 815T Digital Battery Analyzer is a Lexus special tool that can quickly and accurately evaluate the condition of a battery in 5.6 seconds. Lexus recommends the use of this tool for battery testing for two reasons.

- In most cases, it is not necessary to charge a battery before making a decision about the battery's condition.
- Key punching the STK# into the tester generates a warranty code whenever a replacement determination is made for vehicles which fall within warranty coverage.

NOTE

If you are testing any battery other than an OE battery, you will choose from one of the alternatives below:

a. using the keypad, input the rated cold cranking amps (CCA) found on the battery label and depress the CCA key.

b. using the keypad, input the Cranking Amps (CA) found on the battery label and depress the CA key.

c. if no rating is available, test in accordance with the Technician Reference Card (found in the flap of the tester cover and illustrated below) according to the vehicle's recommended battery size.

Battery Chart

LEXUS BATTERY TESTING INSTRUCTIONS MIDTRONICS

To test a Lexus OE or Lexus Interstate OE Replacement battery, input the STK# listed below and press the *STK#/Code* key to begin test. To test all other batteries, locate the battery's CCA or CA rating located on the battery label, and input the number using the keypad. Begin the test by pressing the *CCA* key if using the CCA rating or *CA* key if using the CA rating. If testing a Toyota OE or Toyota Interstate OE Replacement battery, refer to the testing instructions on the reverse side of this card.

LEXUS OE BATTERY					INTERSTATE OE REPLACEMENT			
Model	OE STK#	CCA	Group Size	Supplier	REPL STK#	CCA	Group Size	Supplier
ES300	8026	582	80D26L	PANASONIC	2461	582	24F	INTERSTATE
GS300	8026	582	80D26L	PANASONIC	2461	582	24F	INTERSTATE
SC300	8026	582	80D26L	PANASONIC	2461	582	24F	INTERSTATE
SC300 ≤ 1996	7531	447	75D31L	PANASONIC	2761	675	27F	INTERSTATE
SC400	9531	622	95D31L	PANASONIC	2761	675	27F	INTERSTATE
LS400	8026	582	80D26L	PANASONIC	2461	582	24F	INTERSTATE
LS400 ≤ 1994	9531	622	95D31L	PANASONIC	2761	675	27F	INTERSTATE
LX450	0531	710	105D31L	PANASONIC	2771	710	27F	INTERSTATE
LX470	0531	710	105D31L	PANASONIC	2771	710	27F	INTERSTATE
RX300	8026	582	80D26L	PANASONIC	2461	582	24F	INTERSTATE

Fig. 4-4

As indicated above, one of the most important factors affecting the battery's ability to crank an engine is the battery's state-of-charge. A low state-of-charge indicates a reduction in the number of chemical reaction sites that are available on the battery's plates. This results in a diminished ability to sustain a discharge current.

Conductance testing provides a method of testing that accurately compensates for low battery voltage. It effectively separates the battery's condition from the influence of the state-of-charge, permitting the condition of most discharged batteries to be accurately determined in the state in which they are received at the dealership. This feature saves you time at PDS because, in most cases, you need not be concerned about bringing the battery to a full state-of-charge prior to testing.

Multi-Function Wireless Remote

The wireless door lock remote system is a convenient system for locking and unlocking all the doors at a distance. All the functions of the wireless transmitter in Lexus vehicles have been integrated into the key grip. A Light Emitting Diode (LED) is enclosed in the key grip to monitor if the battery is discharged.

Multi Function Transmitter

Fig. 4-5

Conventional System

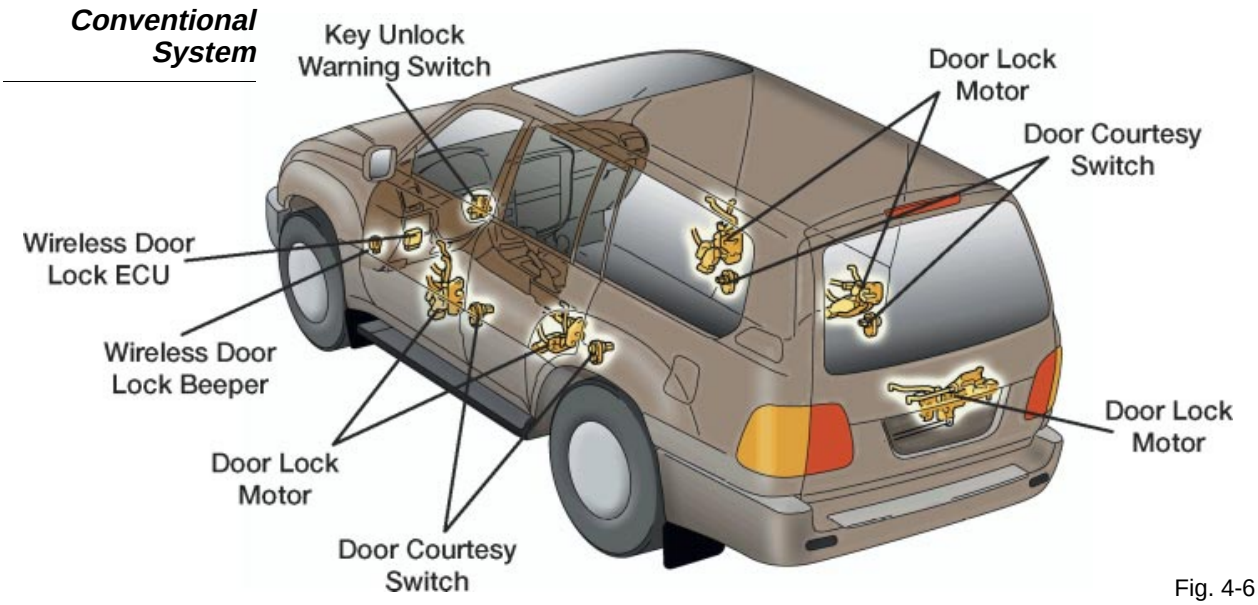

Fig. 4-6

Conventional System

The major functional parts of the wireless door lock system are shown. The basic operation is primarily the same for all vehicles. A major difference is if the system is conventional or part of a multiplex system. The system illustrated in the schematic below is an example of a conventional system. In a conventional system, the switches, sensors, and actuators, belong to their respective systems and are controlled by their respective ECUs.

Layout of the Components

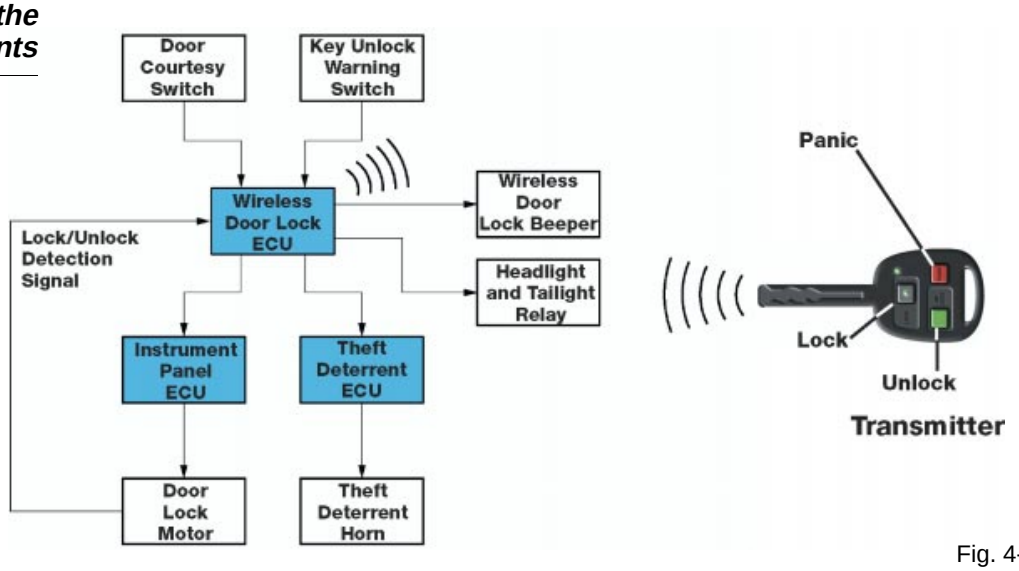

Fig. 4-7

Multiplex System

The system diagram below is part of a multiplex system, specifically an LS 400. In-vehicle networking involving time division is known as multiplexing. In a multiplex system, a communication line called a “bus line” connects the ECUs of the individual systems to each other.

Multiplexing is a method for transferring data among electronic modules via this “serial bus line.” Serial data is electronically coded information transmitted by one computer and received and displayed by another. The term serial data implies that the information is digitally coded and transmitted in a series of data words.

Multiplex System

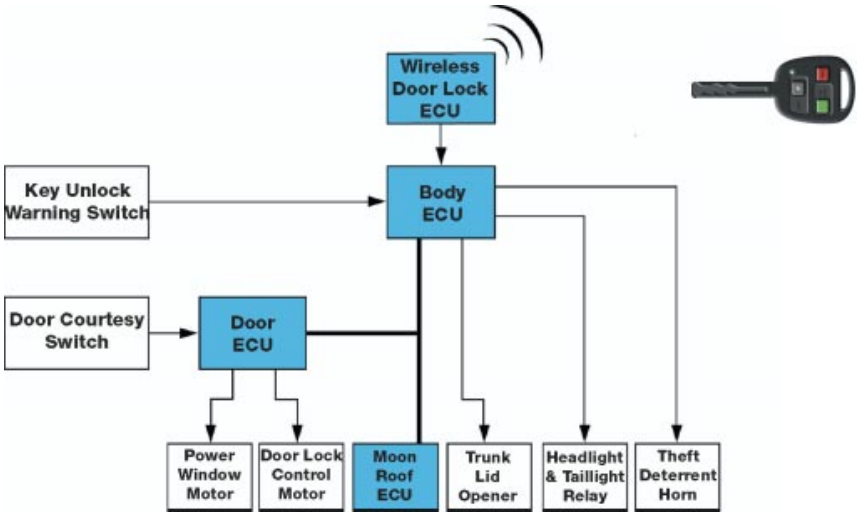

Fig. 4-8

Advantages of Multiplexing

In conventional systems, ECUs cannot exchange multiple messages. One ECU must wait to start transmitting a message, if another is transmitting. In a multiplex system a “communication integrated circuit” (two bus lines connected internally in the ECU) monitors and regulates the process of sending multiple signals.

This “two bus line” configuration provides a fail-safe feature, in that, if one of the bus lines has an open circuit, the other bus line can maintain normal communication.

Systems without multiplexing communication between computer modules require point-to-point wiring resulting in bulky, expensive, and complex wiring harnesses.

Multiplexing reduces the number of wires by combining the signals transmitted on a single wire through time division. By maintaining communication in this way, numerous systems can be handled as if they were a single system. This provides efficient use of sensors and actuators, which may be shared.

Functions can be added to an existing system through software changes rather than added components.

More information about multiplexing will be presented in another course. For the purpose of this course, it is enough to understand some of the advantages of multiplexing.

Headlights

Lexus has installed different types of headlights in different configurations throughout its history. From the 4-light headlight system with vertically positioned low and high beams of the 1997 LS 400 to the inner 4-light surrounding multi-reflector type system with horizontally positioned high and low beams in 1998.

Since you may be required to adjust the headlights during PDS, we will briefly look at the various types of headlights and the various ways to adjust the headlight aim.

Conventional and Multi-Reflector Type Headlight Systems

In a conventional headlight system, the light emitted from the bulbs of the headlight is dispersed and distributed through a lens with a pattern cut in it. Where as in the multi-reflector type headlight, the light emitted from the bulbs is dispersed and distributed through multiple parabolic shaped reflectors.

Headlights

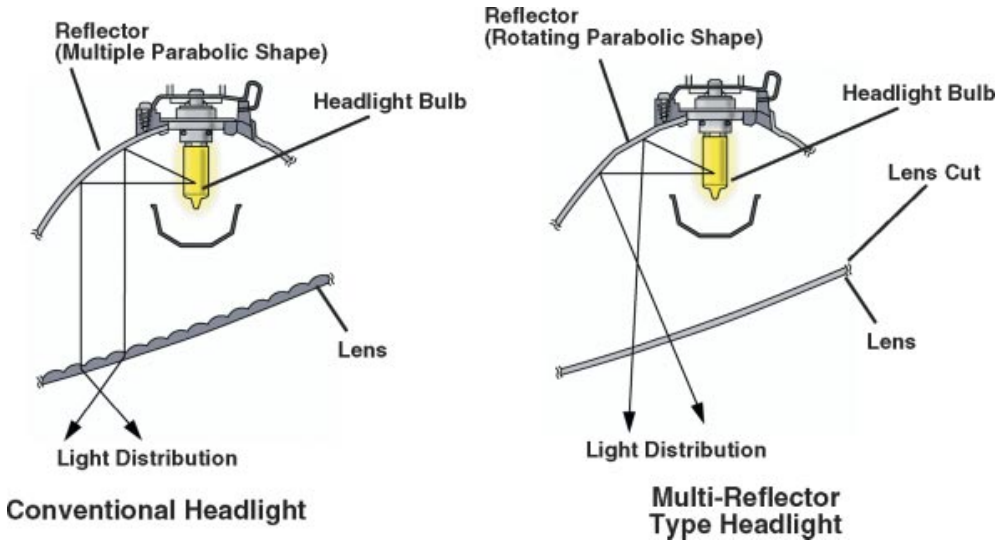

Fig. 4-9

This change eliminates the obscuring of the bulbs through the patterned lens of the headlight assembly as is the result in a conventional system and provides for a more esthetically pleasing appearance through a lens that is clear.

Headlights

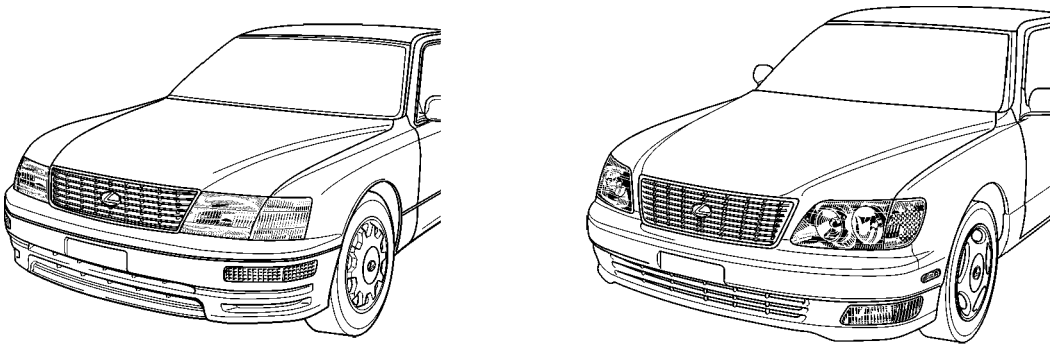

Conventional Headlight

Multi-Reflector Type Headlight

Fig. 4-10

Projector Type Headlight System

The 1998 LX 470 uses two different types of headlights in the same assembly. Projector type headlights for the low beams and multi-reflector type headlights are used for the high beams.

Projector Type Headlight

Front View

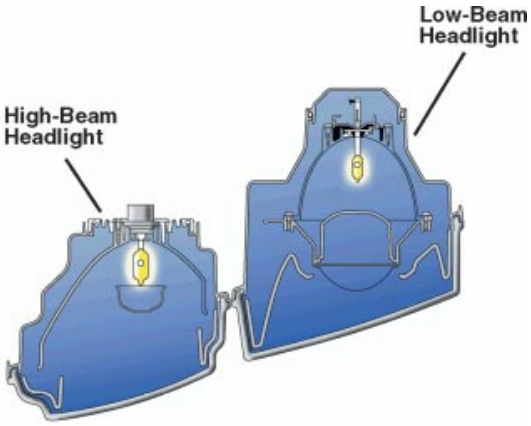

Cross Section

Fig. 4-11

The projector-type headlight used for the low beams is more compact than an ordinary “semi-sealed beam type headlight.” It has a bulb located at one of two focal points (focus # 1). The light beam emanating from the source at focal point # 1 is concentrated in a narrow range and collected at focal point # 2 by an oval-shaped reflector projecting it forward to the projection lens (reference the figure 4-12).

Projector Type Headlight

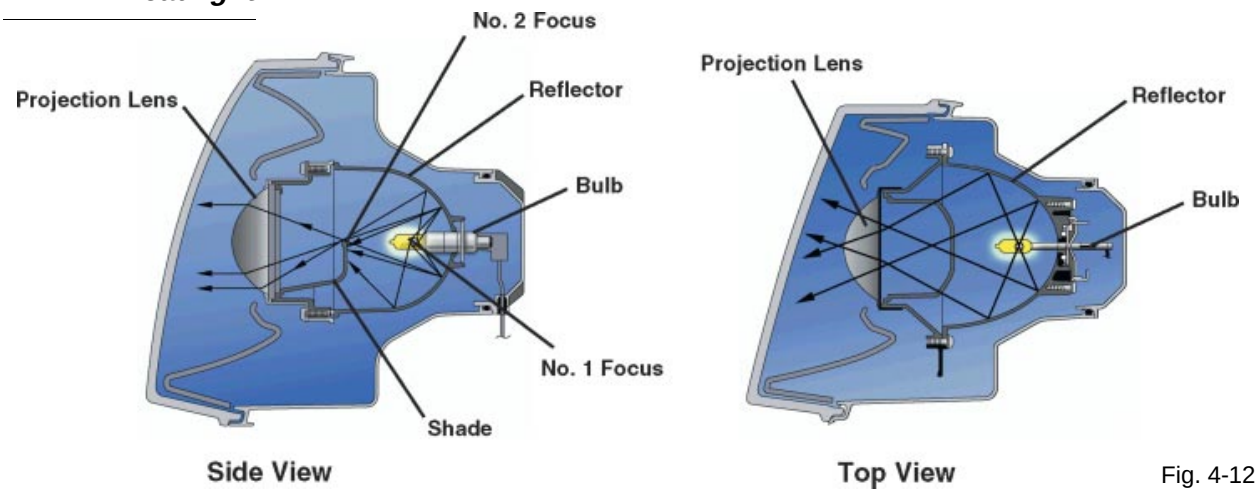

Fig. 4-12

This configuration minimizes the amount of light that deviates from the intended direction of the beam through the projection lens and ensures a sufficient level of illumination.

High Intensity Discharge Headlamp

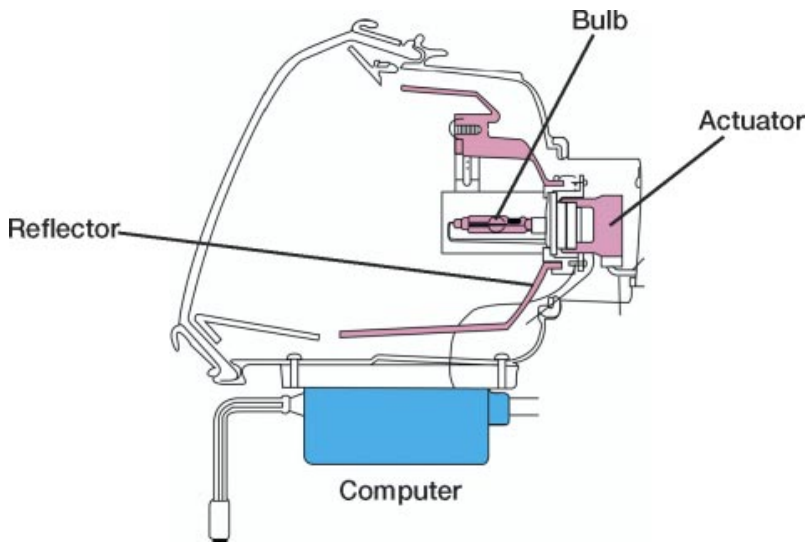

Fig. 4-13

High Intensity Discharge Headlights

The High Intensity Discharge Headlight System consists of a metal halide bulb and a light control computer. The metal halide bulb contains xenon gas, mercury, and metal halide.

Where as a halogen headlight system applies electrical current to the filament in the light bulb to illuminate the filament. In the High Intensity Discharge Headlight System, high voltage is applied to the electrodes on a light bulb to discharge arcs, causing metal atoms enclosed in the bulb to emit light.

Metal Halide Bulb

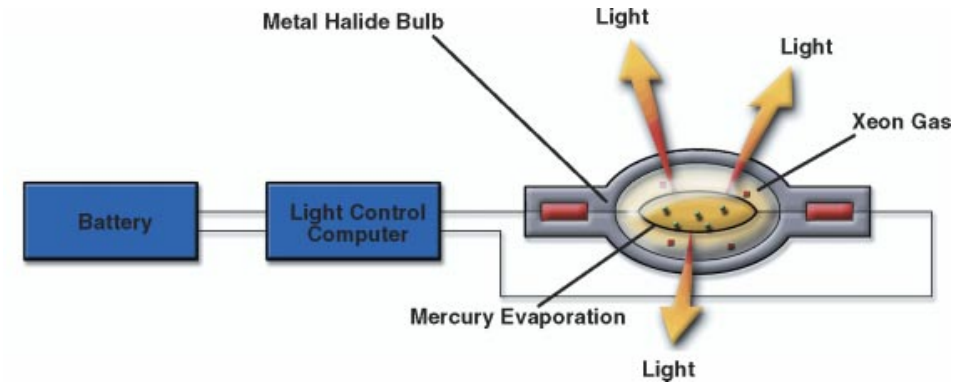

Fig. 4-14

Operation

When high voltage (approximately **20,000** volts) is applied to the electrodes of the metal halide bulb, the xenon gas in the bulb emits light.

As the temperature in the bulb rises, the mercury evaporates and causes arcs to be discharged.

As the temperature in the bulb rises even further, the metal halide in the mercury arc separates into metal atoms and iodine atoms. These separated metal atoms discharge light, which causes the bulb to emit light.

A light control computer is an electronic control unit located under each headlight unit. It generates the high voltage that is applied to the electrodes of the bulbs to enable the HID headlights to begin to illuminate. It also controls the amperage and voltage in the system to provide immediate activation when the headlights are turned ON and which enables the bulbs to continue to illuminate in a stable manner.

A fail-safe function is provided in the system to prevent high voltage from being generated should a problem occur.

If the voltage input to the light control computer deviates from the operating voltage (9-16 volts), the computer stops illuminating and then resumes once the voltage reverts to the operating voltage range.

If an abnormal condition (open or short circuit) occurs in the computer, or if the bulb flashes, the computer stops illuminating the headlights.

If a bulb is not in the socket, the computer stops generating high voltage until the bulb in inserted correctly and the headlight control switch or the ignition switch is cycled from OFF to ON.

Headlight Aim

Headlight aim is effected by referencing the center line of the vehicle and the low beam center mark on paper placed on a wall a specified distance from the vehicle. Observing and assuring that the reflected illumination of the headlight beam is within the parameters of these reference points is indicative of whether the headlight assembly falls within the proper specifications.

Headlight Adjustment

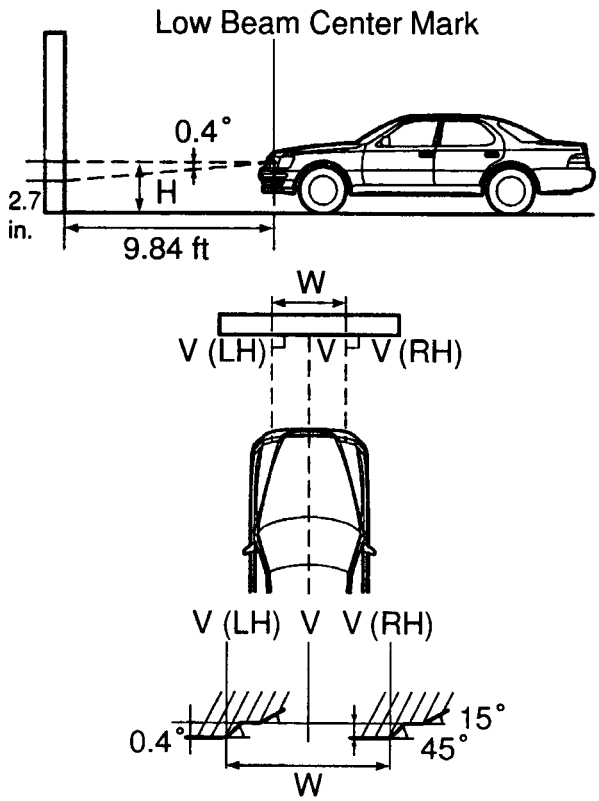

Fig. 4-15

Halogen Type

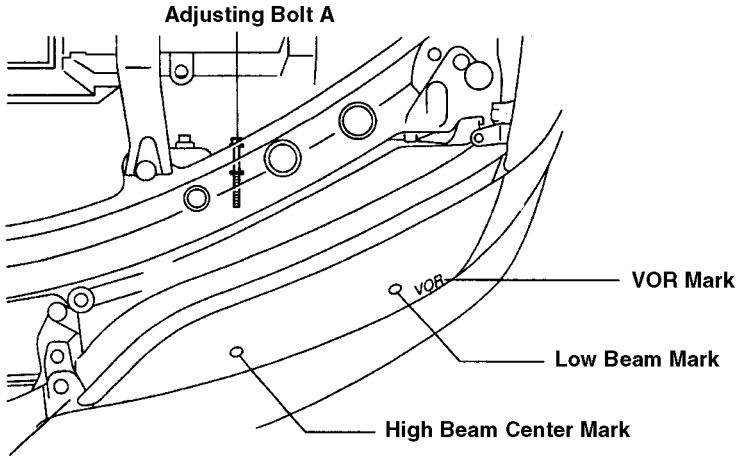

Fig. 4-16

Adjustment Halogen Type

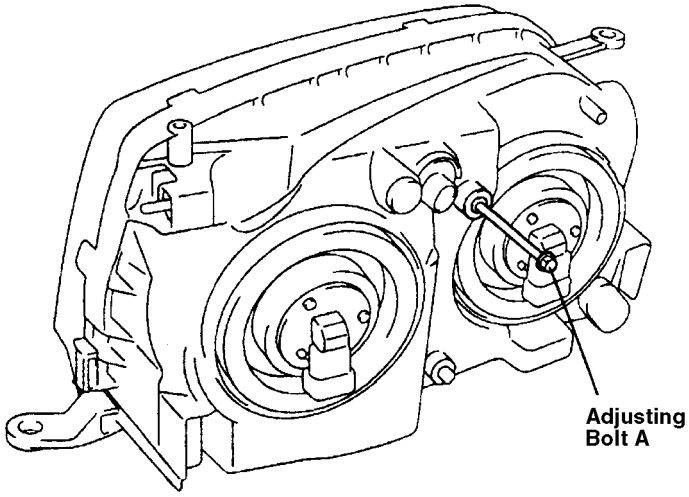

Fig. 4-17

Adjusting bolts located on the back side of the headlight assembly and a leveling bubble gauge are used to make adjustments to the headlights should they be out of specifications.

The procedures and specifications differ slightly dependent upon the type of headlights installed in the vehicle. Be sure to check the appropriated section of the PDS Manual and the BE Section of the Repair Manual to assure the proper procedure is applied to the vehicle that you are working on.

Adjustment HID

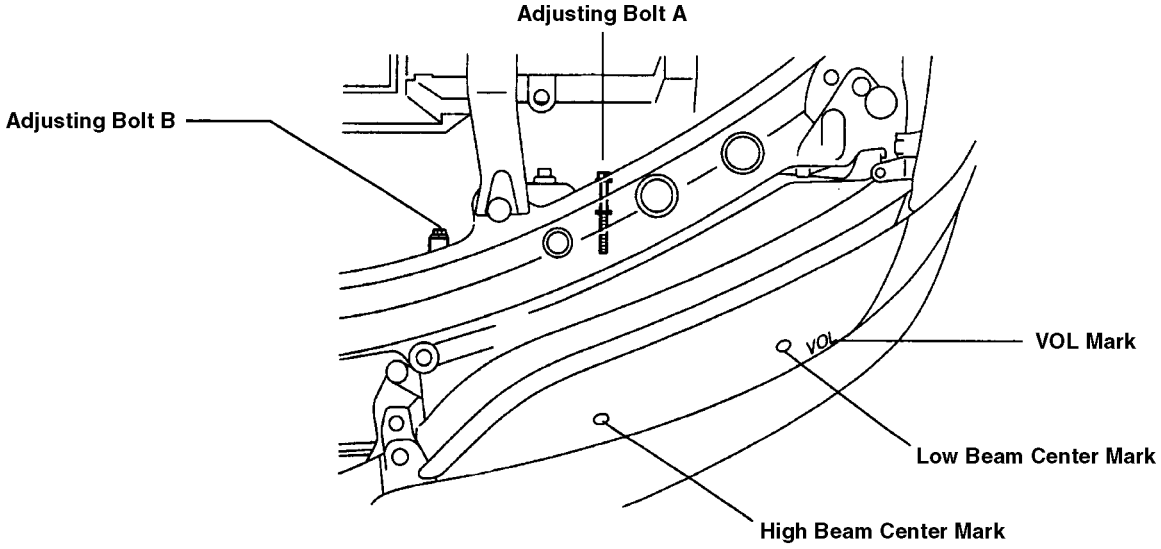

Fig. 4-18

Adjustment HID Type

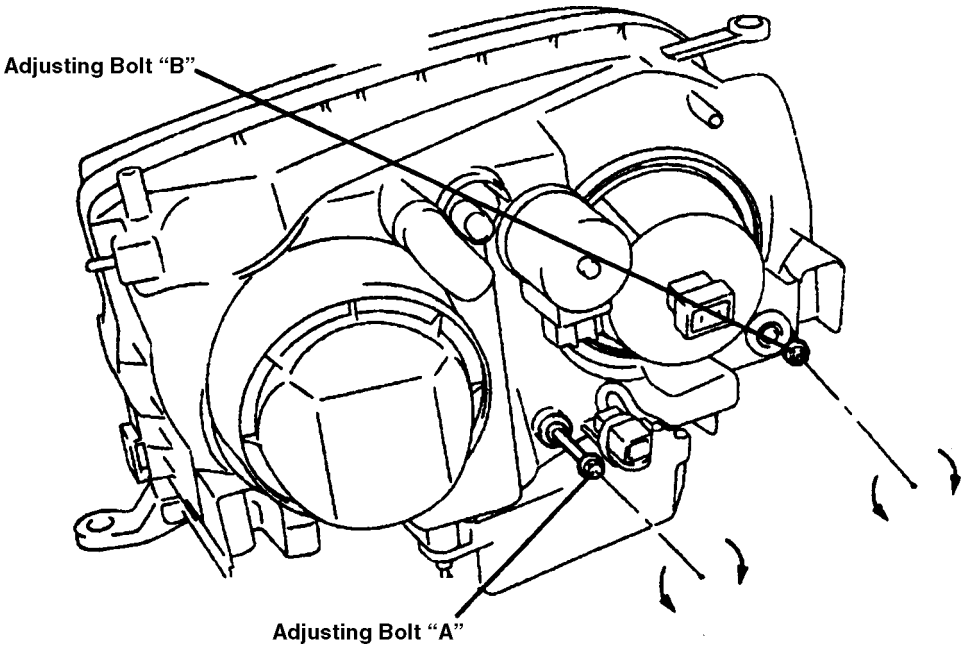

Fig. 4-19

Automatic Light Control System

When the light control switch is in the AUTO position, the automatic light control sensor detects the ambient light and automatically turns the headlights and taillights ON or OFF accordingly. In the system installed in the ES 300, the function to judge the ambient light and the function to control the headlight and taillight relays is centered in the integration relay.

Auto Light Control Sensor

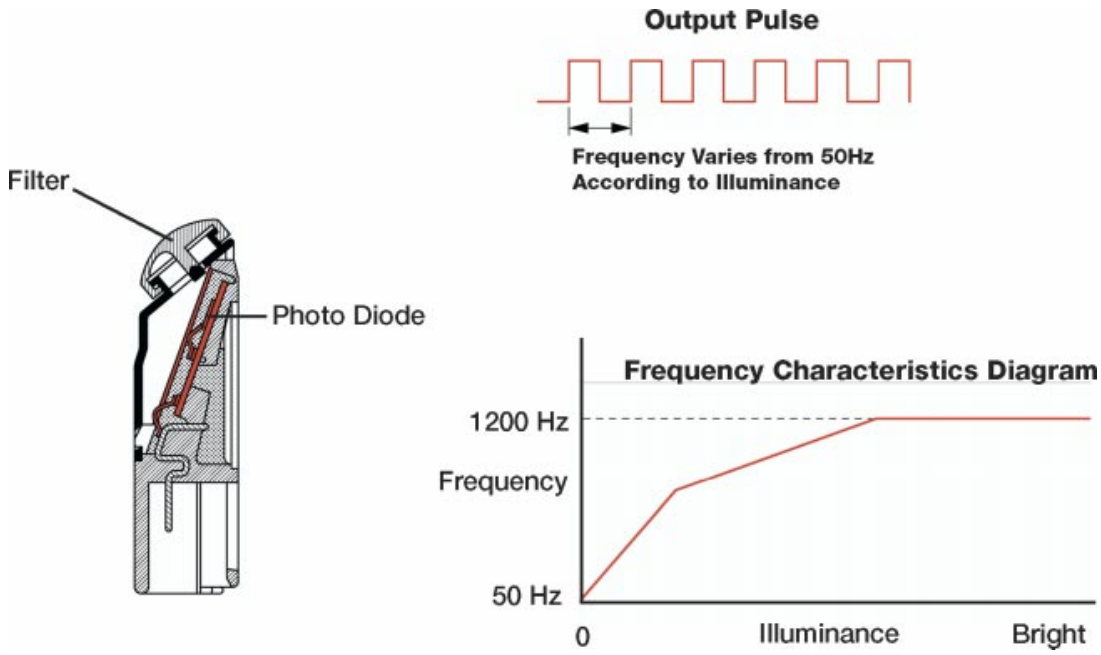

Fig. 4-20

The light sensor is comprised of a photo diode that senses the available light, a power source circuit, and a frequency output circuit. The brightness that is detected by the light sensor is transmitted to the integration relay in the form of signals based on the frequency output system. This system varies the frequency of the pulses output by the sensor in accordance with the amount of illumination that is detected. A relay activation circuit in the integration relay effects the ON/OFF control of the taillights and headlights.

The system is slightly different in the GS 300/400 and the RX 300 vehicles. The light control relay in these systems is integrated in the body ECU. The brightness detected by the light sensor in this system is transmitted to the daytime running light ECU in the form of signals based on the frequency output system.

Light Auto Turn Off System

When the ignition key is turned from the ON or ACC position to the LOCK position and the driver's door is opened with the headlights and taillights turned ON, the light auto turn-off system automatically turns them OFF.

Light Auto Turn-Off System

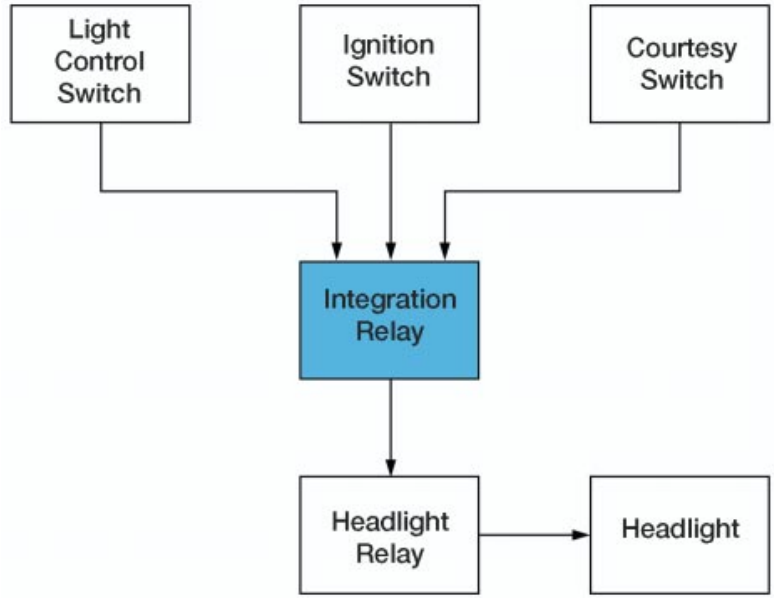

Fig. 4-21

A delay feature has been integrated to the system that will turn the headlights OFF after a prescribed length of time has elapsed.

When all the doors are closed, the integration relay determines the time and after 30 seconds have elapsed, it turns the headlight relay OFF causing the headlights to turn OFF.

If a door is opened prior to a 30-second time interval, the integration relay will reset and will resume determining the time lapse after the doors are closed.

If the relay is counting time and the doors are locked using the transmitter or the double key cycling of the key in the door, the headlights will turn OFF immediately.

Sensor Inspection

Inspection of the automatic light control sensor AUTO ON feature involves turning the ignition key to the ON position with the system light control switch in the AUTO position. Verify that the accessory lights and headlights illuminate as you cover the sensor.

Light Control Sensor - AUTO ON Feature

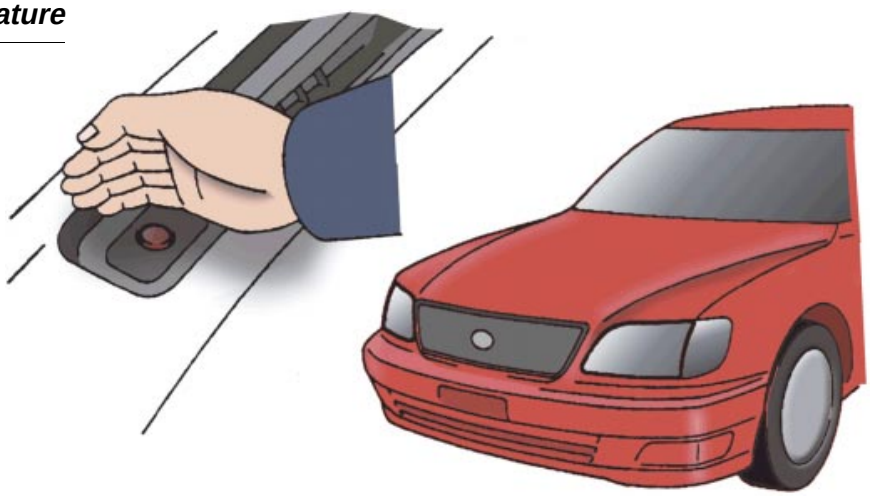

Fig. 4-22

To inspect the sensor AUTO OFF feature, gradually expose the sensor to direct sunlight and confirm that the headlights and accessory lights turn OFF as the sensor is gradually uncovered.

Light Control Sensor - AUTO OFF Feature

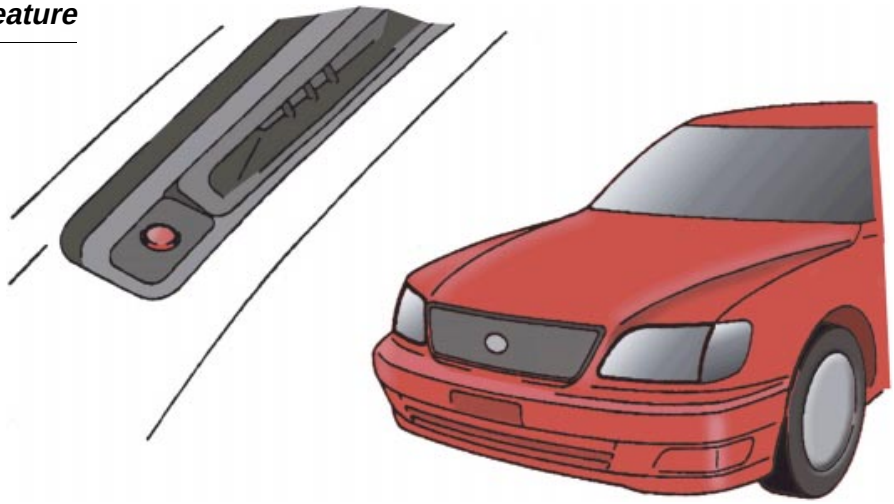

Fig. 4-23

Interior Light Control System

The Interior Light Control System feature is a part of the illuminated entry system. When the integration relay detects a door unlock signal using the key or the remote key transmitter, it turns the interior dome light and ignition key cylinder light ON for 15 seconds.

This feature is turned OFF by the integration relay after 15 seconds if no change in the system is detected (such as a door opening).

Interior Light Control System

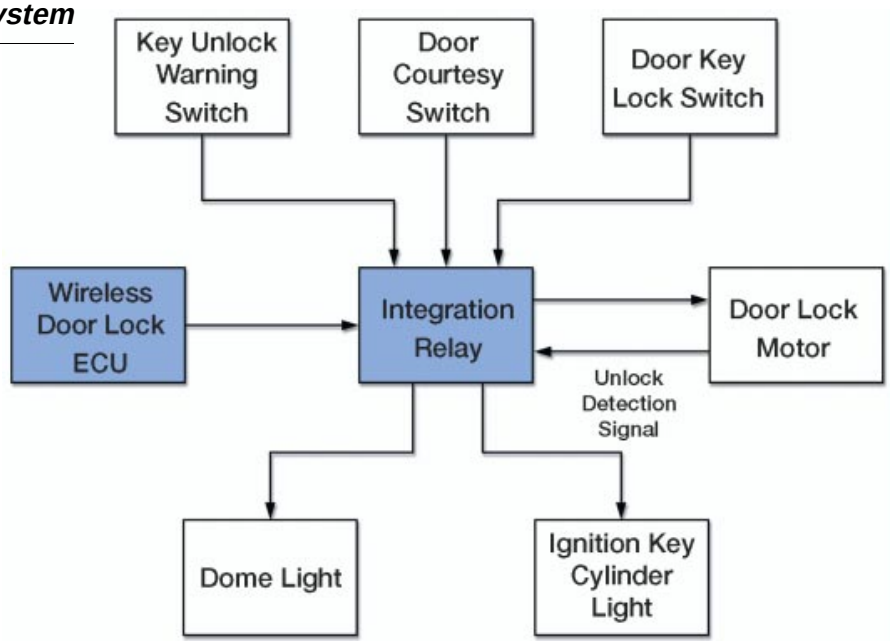

Fig. 4-24

The unlock-linked illumination and the illuminated entry are controlled by the integration relay. When the door is opened, the dome light is controlled by the illuminated entry system and the interior light control system is deactivated.

Automatic Headlight Beam Level Control System

The automatic headlight beam level control system regulates the orientation of the reflectors of the headlights in relation to the posture of the vehicle as detected by height control sensors located on the suspension system. This system is activated when the ignition switch is turned ON and the headlight control switch is turned ON.

Automatic Headlight Beam Level Control System

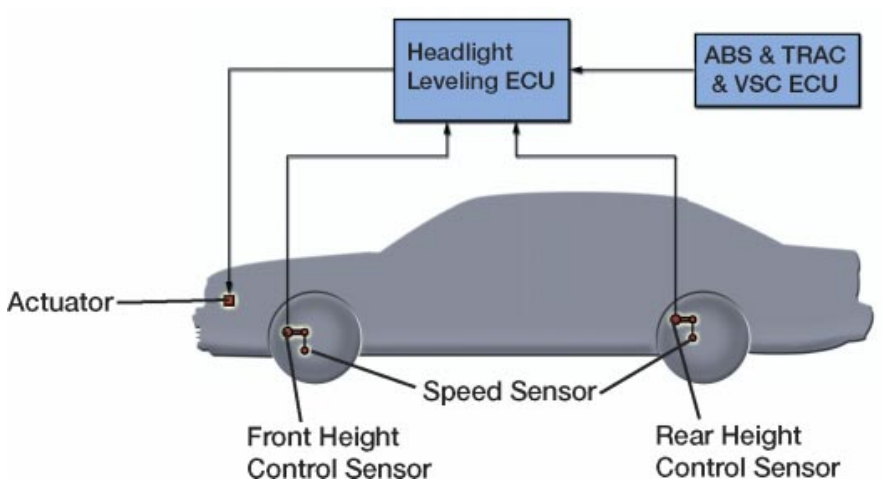

Fig. 4-25

While the vehicle is being driven, the vehicle posture changes constantly based upon the road surface conditions. These postural changes are detected by the height control sensors (located in the front and rear suspension) and output this amount in the form of signals to the headlight leveling ECU.

Automatic Headlight Beam Level Control System - Height Control Sensor

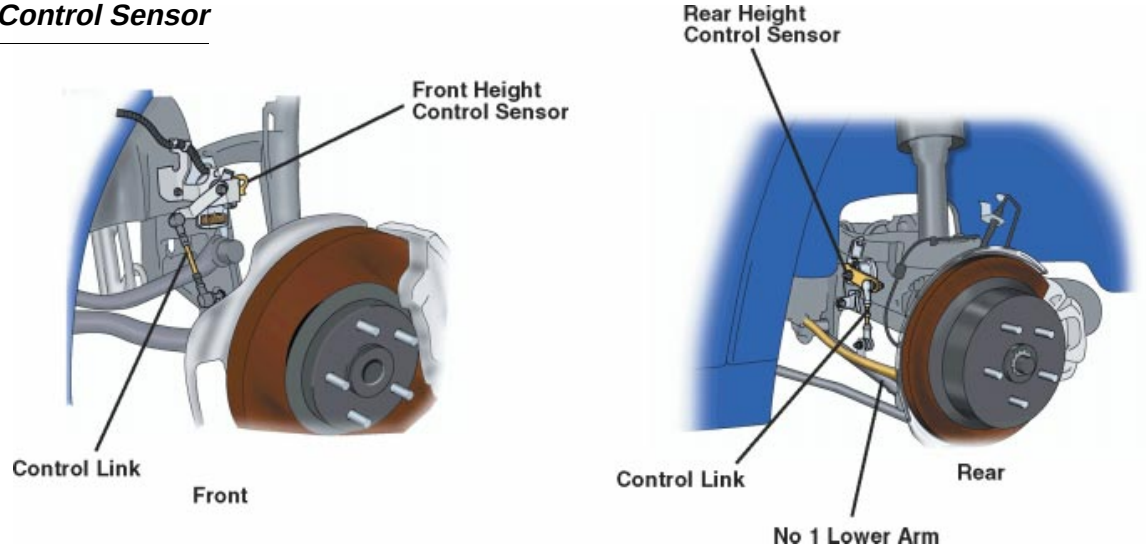

Fig. 4-26

The ABS & TRAC & VSC ECU outputs wheel speed (based upon signals received from speed sensors that are part of the ABS system) to the headlight ECU. Based upon these signals, the Headlight Leveling ECU determines the amount of variance in the vehicle's pitch angle.

The Headlight Leveling ECU outputs control signals to the height control actuators located at the headlights. The actuators use a step motor to regulate the angle of the reflectors in the headlights and thereby vary the beam. In this manner, the ECU regulates the headlights to maintain a constant beam level regardless of any changes in the vehicle's posture.

If a malfunction is detected in any of the sensors or actuators of the system, a warning message appears on the multi-information display in the combination meter. Once the ignition is turned OFF, the warning message will not reappear until a malfunction is detected again.

Tilt & Telescopic Steering Column

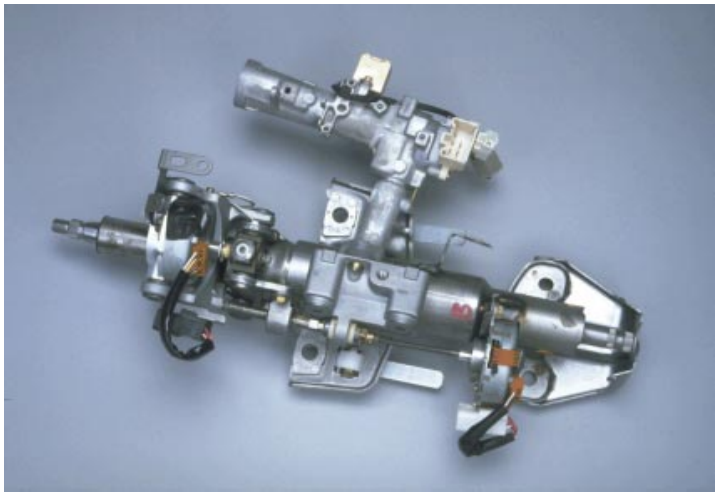

Fig. 4-27

Power Tilt and Telescopic Steering Column

The Power Tilt and Telescopic Steering Column is a compact and lightweight design that does not require a reduction mechanism. Instead, a screw mechanism is used to convert the motor's rotational movement to a linear movement. The system employs two ultrasonic motors that feature low-speed and high torque characteristics.

Ultrasonic Tilt & Telescopic Motors

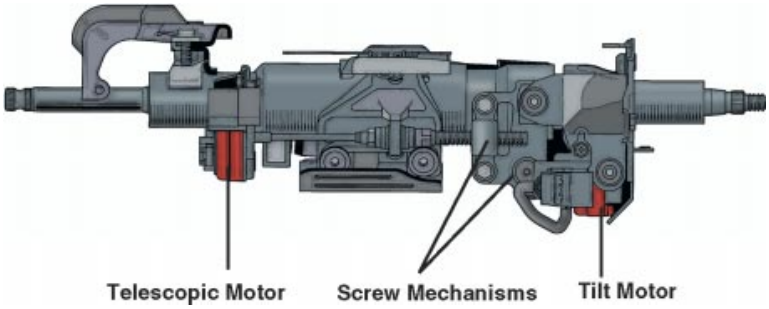

Fig. 4-28

The tilt and telescopic position can be manually adjusted as desired by operating a switch. A step-less adjustment enables the tilt mechanism to be tilted 12° vertically, and the telescopic mechanism to be moved 1.65 inches longitudinally.

The system has an auto-set function that can be set to two positions in conjunction with the driving position memory function. Pressing the driving position memory switch, located in the drivers door duplicates the tilt and telescopic positions that have been previously stored in memory. Up to two sets of tilt and telescopic positions can be stored. When the ignition key is removed, the steering column moves forward and away from the driver, and also tilts up for easy exit and entry.

When the ignition key is inserted in the ignition switch, the steering column returns to the previously set position.

NOTE

The auto set function can be prohibited using the Lexus Diagnostic Tester.

Power Tilt & Telescopic Diagram

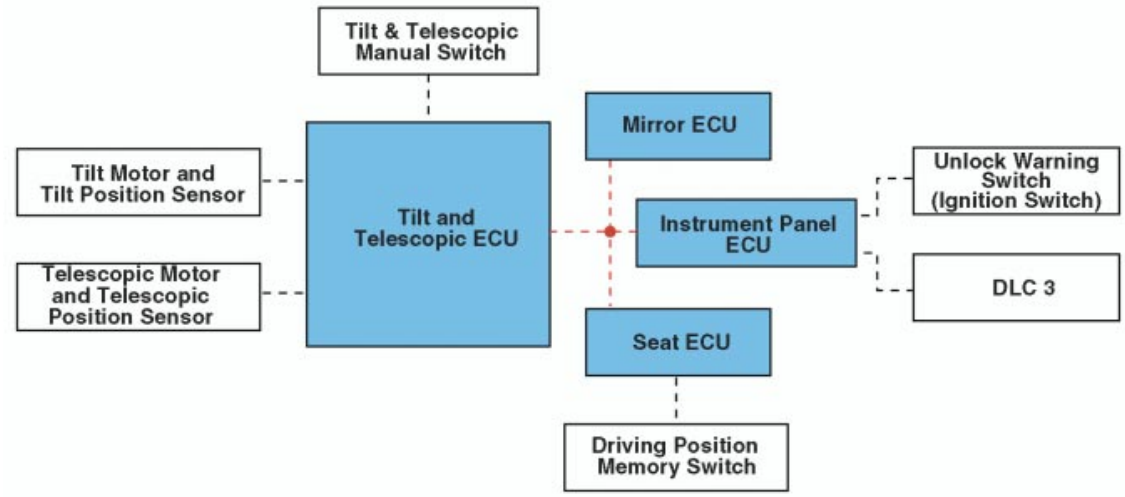

Fig. 4-29

Each of the ultrasonic motors contains a position sensor that uses a Hall IC and magnet to detect the tilt and/or telescopic position. Located in the ECU, the rotation of the motor and the tilt and telescopic positions are detected by the position sensor that utilizes a hall element to detect the changes in the magnetic field of the magnets attached to the shafts of each of the motors.

The operation of the system installed in the GS 300/400 vehicle is similar to that of the LX 470 (illustrated above), however the system uses a multiplex arrangement.

A self-diagnosis function has been integrated into the system. If a malfunction is detected, the ECU stores the malfunction data in memory. Accessing DLC 3 and using the Lexus Diagnostic Tester, diagnostic trouble codes may be retrieved and Active Test may be performed.

Power Windows

Lexus Power Window Systems have many interesting features. Some of these features are listed below:

- One-touch auto up-and-down function
- All-door one-touch auto up-and-down function
- One-touch auto up-and-down remote control function
- Transmitter-linked down function
- Key-linked up-and-down function
- Jam protection function

Power Windows

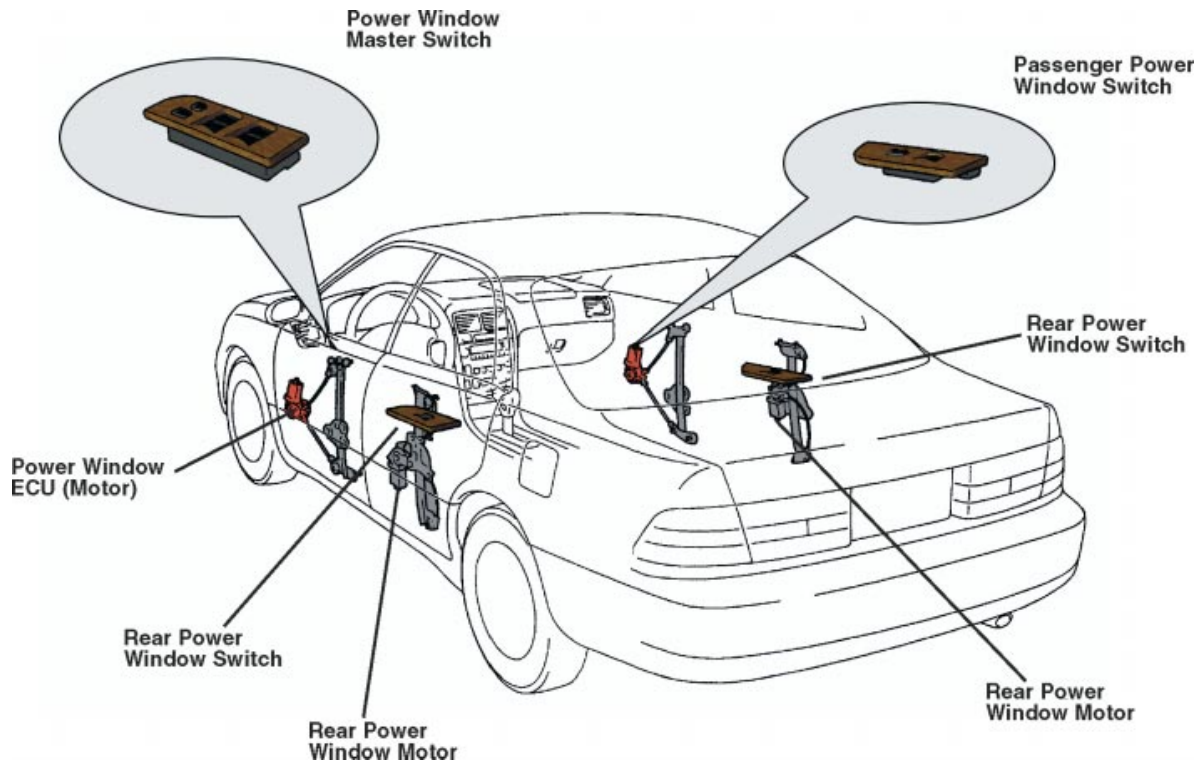

Fig. 4-30

One-Touch Auto up-and-down Function

The power window master switch outputs a signal for one-touch auto-up or one-touch auto-down operation. The driver's door ECU detects the control signal and then controls the power window motor according to the output signal.

Window Master Switch

Fig. 4-31

In the case of all-door one-touch auto-up and down function, this function is also provided for the front passenger window and rear windows. The operation of those windows is primarily the same as that of the driver's door window, except the door ECU of the respective door detects the control signal from the switch to execute an auto-up or auto-down window operation.

Moon Roof One-Touch Operation

The tilt-and-slide type power moon roof also features one-touch operation that enables the moon roof to effect a fully open or a fully closed tilt-and-slide operation.

When one of the moon roof switches (slide switch or tilt switch) is pressed for longer than 0.3 seconds, the microcomputer (in the sliding roof drive gear assembly) sends a signal causing the sliding moon roof motor to rotate based upon the switch operation that was selected.

At the same time, a timer function of the microcomputer activates which provides current to the motor and the moon roof will carry out the operation selected even if the switch is no longer depressed.

NOTE

The sliding roof microcomputer, sliding roof motor, and drive gear are all parts of the sliding roof drive gear assembly.

One-Touch Auto up-and-down Remote Function

The auto-up and auto-down functions of the front passenger window and the rear windows can be controlled by operating the power window master switch.

When the power window master switch is operated to control the front passenger window or the rear windows, the control signal is transmitted via the driver's door ECU and the body ECU to the door ECU of the target door. The door ECU that receives the control signal controls the motor according to the command of the signal.

Power Window System

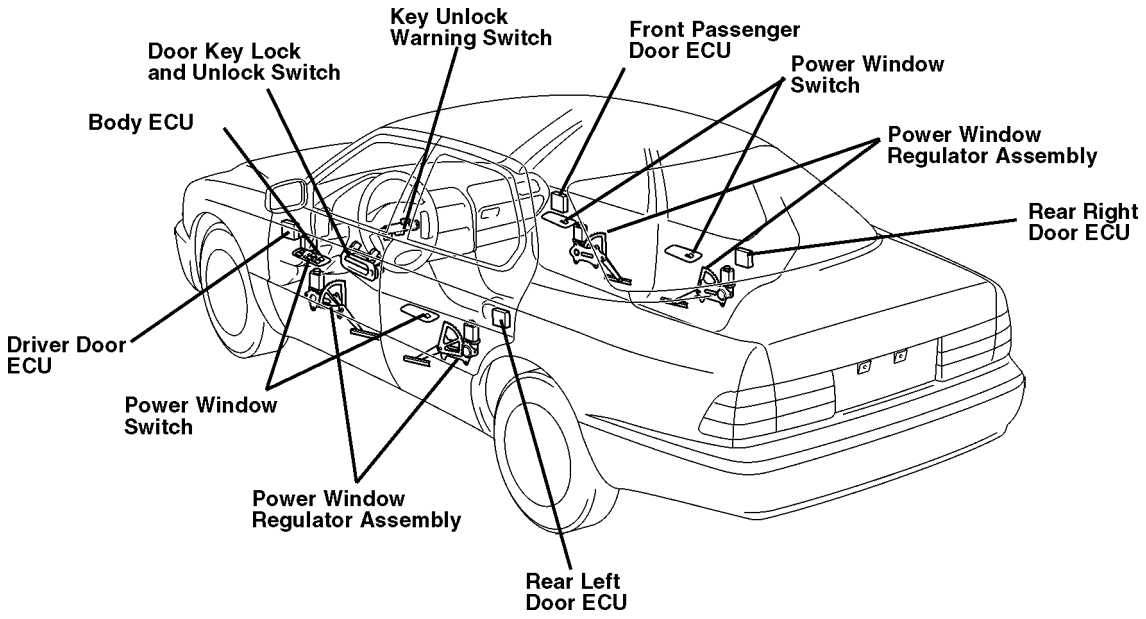

Fig. 4-32

Transmitter-Linked Down Function

When the body ECU receives an unlock signal from the transmitter (continuously for longer than 1.5 seconds), the body ECU transmits a power window control signal to the door ECUs. Upon receiving the control signal, the door ECUs control their respective power window motors according to the signal to open the windows. This function is only activated when the unlock signal is received continuously by the ECU.

Key-Linked up-and-down Function

When the driver's door key cylinder is turned and maintained in the lock or unlock position for longer than 1.5 seconds, the window opens or closes during the time that position is maintained. On some Lexus models this feature is limited to the driver's door window, while on some models this is a simultaneous function that opens and closes the windows of all of the doors.

Jam Protection

Jam Protection is a feature that detects if a foreign object is caught between the glass and the window frame (or between the moon roof and body) while the power window or moon roof is closing during one-touch operation.

System Construction

The Power Window Master Switch outputs control signals for the power window's up, down, one-touch auto up, and one-touch auto down functions to the controller (in a conventional system).

NOTE

The operation is similar in a multiplex system, however, the power window switch outputs control signals to the door ECU rather than to the controller.

The Jam Protection System (in a conventional power window circuit) consists of a pulse input circuit, jam judgement circuit, a motor drive circuit, and controller integrated in the power window switch. The jam judgement circuit detects if a foreign object is jammed in the window by sensing a change in the signal output of a pulse sensor.

Power Window Control Circuit

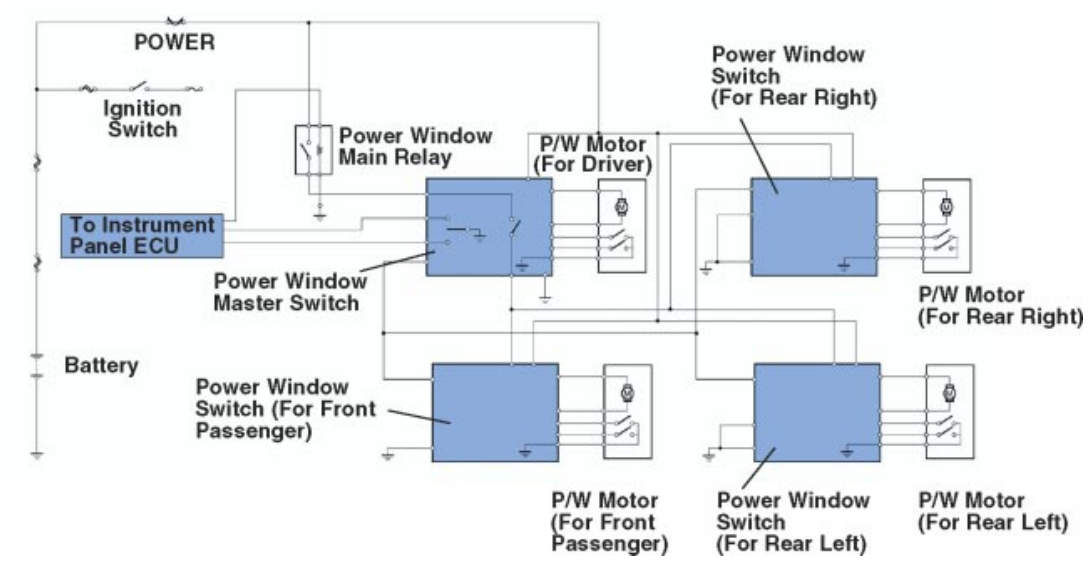

Fig. 4-34

The system uses a pulse plate on the power window motor reduction gear to produce a digital motor speed signal. The pulse plate outputs the signal to the controller integrated in the power window switch (in a conventional system) with an frequency that is appropriate for the rpm of the motor.

NOTE In a multiplex system, the pulse plate outputs the digital signal to the door ECU.

A limit switch (enclosed in the reduction gear) determines the neutral zone where jam protection is inoperable and disables jam protection immediately prior to the window closing.

Pulse Sensor

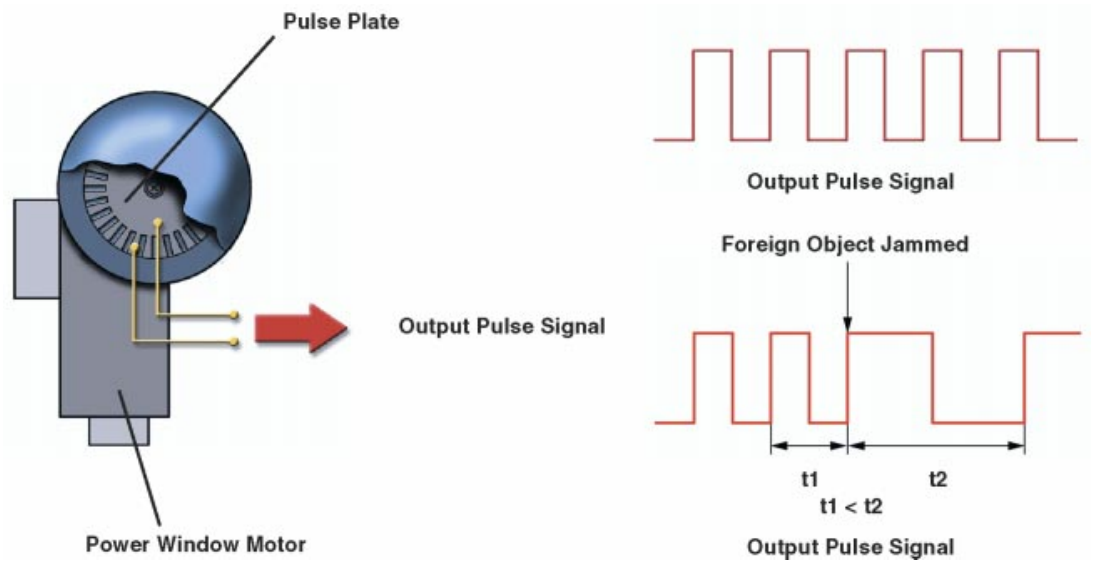

Fig. 4-35

NOTE The operation is similar in a multiplex system, however, the pulse sensor outputs a pulse signal with a frequency that is appropriate for the rpm of the motor to the door ECU (instead of to the controller as in a conventional system).

Based upon the signals received from the power window switch, pulse sensor, etc., the door ECU detects a foreign object jamming in the window and the ECU controls the up and down operations of the power window.

Normal Operation

During normal operation of the power windows, the power window motor rotates a constant speed. Accordingly, the frequency of the pulse signals that are output by the pulse sensor to the controller (door ECU in a multiplex system) are uniform.

Normal Operation

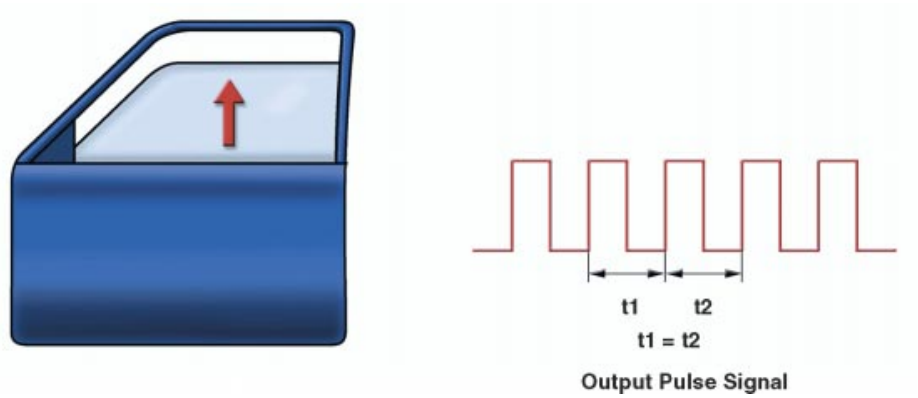

Fig. 4-36

The controller (door ECU in a multiplex system) determines the power window movement according to the signal that it receives. When the controller (door ECU in a multiplex system) receives pulse signals with a uniform frequency, it determines that no jamming has occurred.

Jam Protection Operation

An IC circuit in the master switch monitors window closing speed in a conventional system. The ECU monitors window closing speed in a multiplex system.

If an object becomes jammed between the glass and the window frame during one-touch, auto-up, or key-off auto-up operation, (key-linked up operation as well in a multiplex system), the power window's motor speed decreases.

As a result, the frequency of the pulse signals output by the pulse sensor to the controller (door ECU in a multiplex system) decreases. If the motor's deceleration rate exceeds a predetermined value, the jam judgement circuit (door ECU in a multiplex system) determines that jamming has occurred.

Jam Protection

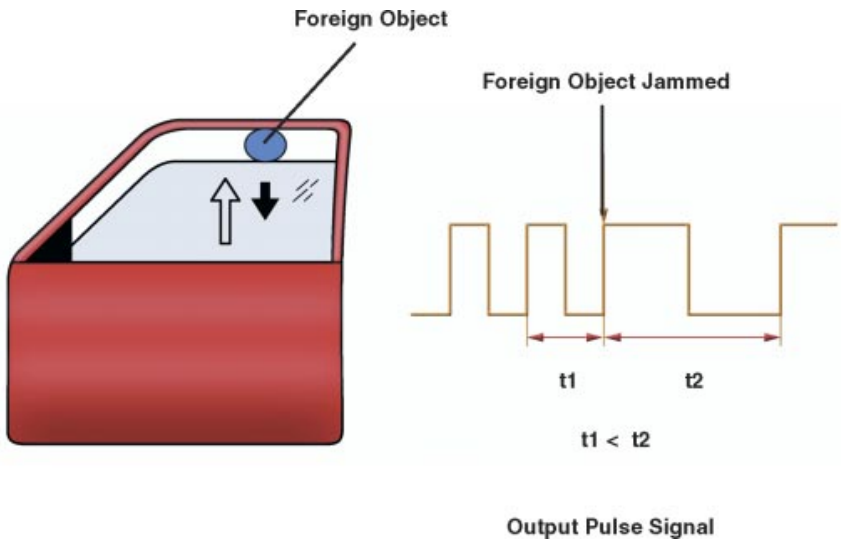

Fig. 4-37

At this point, the controller (door ECU in a multiplex system) stops the upward movement of the window and automatically moves the window downward, leaving an opening of 7.9 inches or more.

NOTE

- In the conventional system, the jam protection function operates only during a one-touch auto-up operation.
- In a multiplex system, the jam protection function operates during a one-touch auto-up, key-off auto-up, and key-linked up operation.
- Jam protection does not operate when the window switch is held in the up position.

CAUTION

There is an area immediately prior to the window fully closing where the jam protection feature is not in operation. Be careful, small objects such as your finger may not activate the jam protection feature in this area.

Moon Roof Jam Protection

The Lexus tilt-and-slide type power moon roof with “one-touch operation” and “jam protection” enables the moon roof to be fully opened or fully closed with the touch of a button. It also has a jam protection feature that detects if a foreign object is caught while the moon roof is closing in slide-close mode.

Construction

A sliding roof gear assembly consists of a microcomputer that contains a Hall IC and a drive unit consisting of a sliding roof motor and a drive gear.

Moon Roof Wiring Diagram

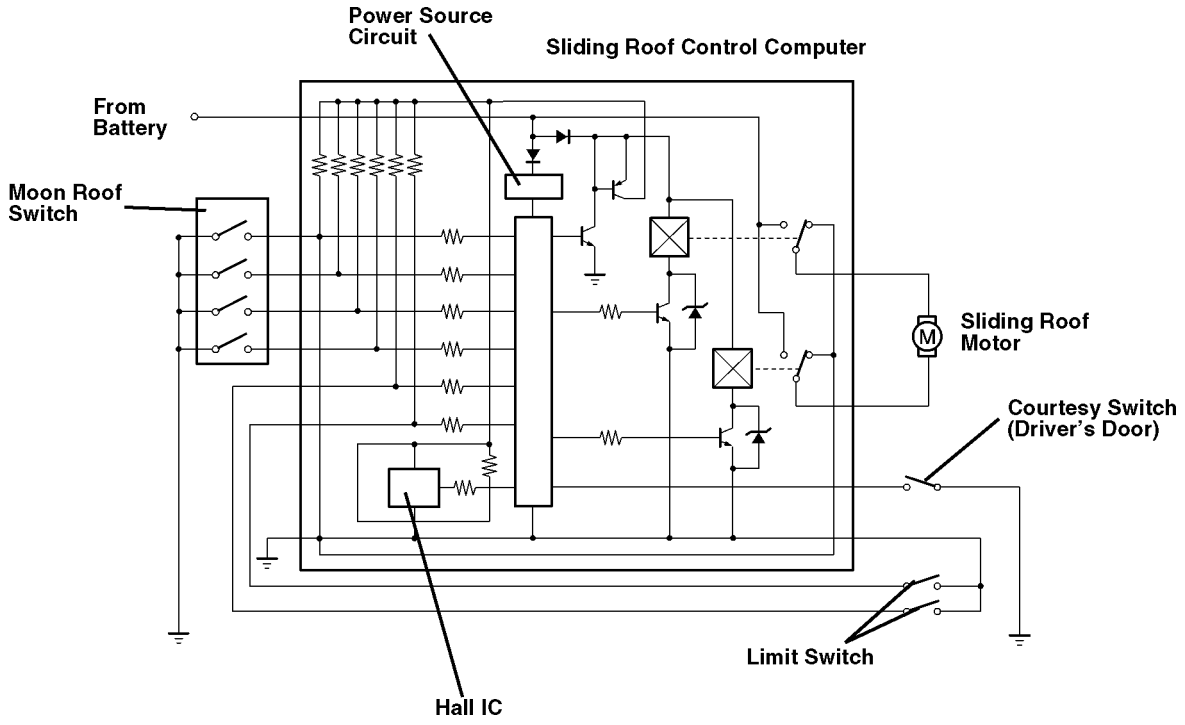

Fig. 4-38

The sliding roof drive gear assembly contains a pulse sensor to detect if a foreign object becomes caught in the sliding roof. The pulse sensor consists of a magnet and a Hall IC. The magnet rotates with the sliding roof motor. The Hall IC detects polarity changes generated by the rotation of the magnet and converts it to a pulse signal. This signal is output from the pulse sensor to the microcomputer.

Moon Roof Drive Gear Assembly

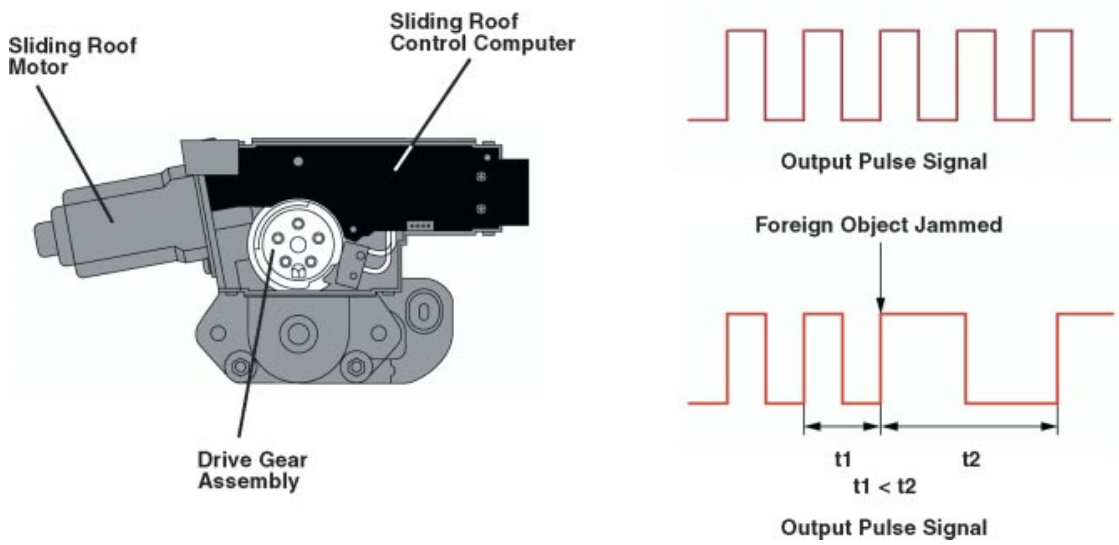

Fig. 4-39

Moon Roof One-Touch Operation

When one of the moon roof switches (the slide switch or the tilt switch) is pressed for longer than 0.3 seconds, the microcomputer activates the sliding moon roof motor to rotate according to the switch operation selected.

Like the power window one-touch operation, a timer feature in the microcomputer activates, and current is applied to the motor. The moon roof will now carry out slide-open, slide-close, tilt-up, and tilt-down operations even if the switch is released.

One-touch operation is interrupted under the following conditions:

- The microcomputer determines that the motor has seized (by the activation of the “jam protection” feature), according to the signals output from the Hall IC.
- The moon roof reaches the fully opened or fully closed position.
- One of the moon roof switches (slide or tilt) is depressed during moonroof operation.
- The slide switch and tilt switch are turned ON simultaneously.

Moon Roof Jam Protection Operation

Jam Protection operation is primarily the same for the moon roof as it is for the windows. If an object becomes jammed between the moon roof and the body of the vehicle during slide close operation, the sliding roof motor's speed decreases. As a result, the frequency of the pulse signals output by the pulse sensor to microcomputer decreases.

Moon Roof Jam Protection

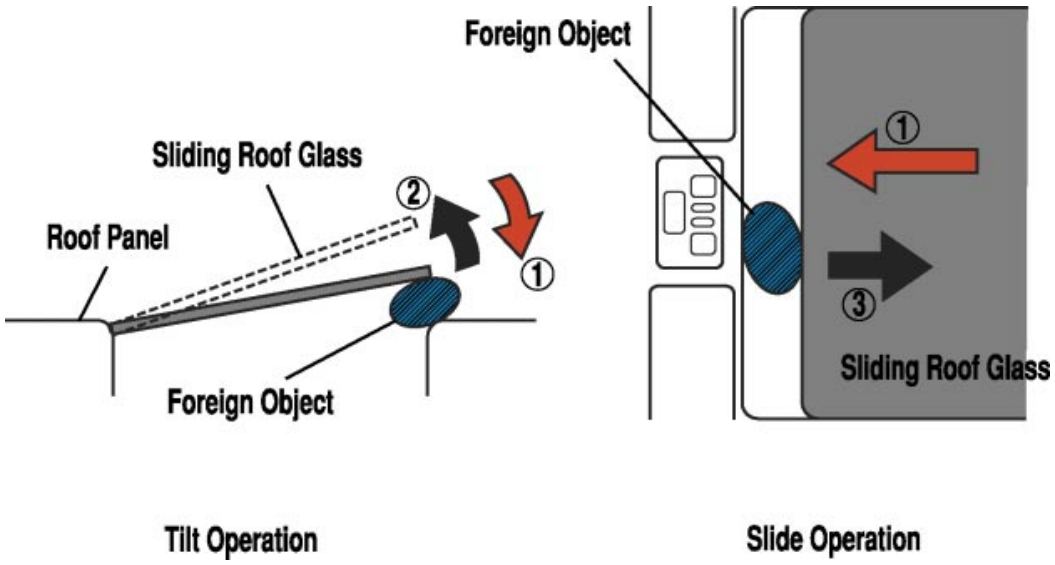

Fig. 4-40

If the motor's deceleration rate exceeds a predetermined value or seizure is detected, the microcomputer determines that jamming has occurred. At this point, the microcomputer interrupts operation and automatically moves the moon roof open, leaving an opening of 7.9 inches or more.

Historical Overview of OBD Regulations

The Clean Air Act

In 1963 the United States Government passed the Clean Air Act. The purpose of the Clean Air Act was to improve the air quality.

The EPA and Federal Evaporative Emissions Standards

The Environmental Protection Agency (EPA) was formed in 1970 and was given the authority to regulate automotive related emissions. The agency regulates, monitors, and enforces the standards set forth by the government to achieve improved air quality.

The role of the EPA was to determine which emissions were targeted, and provide guidelines and standards of limitations on the acceptable levels of pollutants emitted from automobiles and trucks. In 1971, the Federal Evaporative Emissions Standards were enacted which provided these guidelines.

Today, the EPA regulates and advises the automotive (and automotive related) industry regarding implementation, compliance, and enforcement of the emission standards and vehicle programs determined within scope of it's authority, such as:

- Inspection and maintenance (I/M) programs
- Fuel technology
- Alternative fuel powered vehicle development
- Mass transportation programs targeting the reduction of controlled emissions

California Emissions Standards and OBD I - Generation 1

The California Air Resources Board (CARB) was created in 1988 to regulate emissions in the state of California. In an effort to enforce the emission requirements mandated at the time, CARB required On Board Diagnostic (OBD I) monitoring of critical emission related components and systems which included:

- Some emissions-related electrical components such as the Oxygen Sensor (O_2 Sensor)
- The fuel delivery system
- The Exhaust Gas Recirculation System (EGR)
- Power Control System

Additionally, OBD I required:

- The storage of Diagnostic Trouble Codes (DTCs) in the memory of the Electronic Control Module (ECM) in the vehicle
- A Malfunction Indicator Lamp (MIL) to indicate a malfunction in the system.

However, OBD I did not detect many emissions related incidents such as misfire, catalytic converter failures, evaporative emissions incidents, secondary air system failures, oxygen sensor and fuel system closed loop fueling performance, etc.

OBD II

1989, OBD II was adopted by CARB. OBD II was designed to reduce the time between the occurrence of a malfunction and its detection. It required monitoring of *all* emission-related components and systems for signs of deterioration.

The intent of OBD II was to detect most vehicle malfunctions when performance of a power train component or system deteriorates to the point where vehicle Hydrocarbon (HC) emissions exceed the applicable EPA emissions standard.

- OBD II was a much more comprehensive regulation than OBD I.
- OBD II regulation required On-Board Diagnosis of *all* vehicle components and systems that can measurably affect emissions.

In 1990, the Federal Clean Air Act was amended. It extended the scope of EPA authority and provided for tighter emission requirements. Federal regulations similar to those of OBD II were adopted at this time.

OBD II - Generation 2

In 1994, Federal OBD II regulations were adopted requiring manufacturers to implement new comprehensive on-board diagnostic systems on all vehicles starting in the 1994 model year and requiring all vehicles to comply by the 1996 model year.

OBD II required an on-board system capable of continuously monitoring the efficiency of the emission control system and of many more automotive components, such as:

- catalyst efficiency monitoring
- engine misfire detection
- canister purge system monitoring
- secondary air system monitoring
- EGR system flow rate (if EGR is installed)
- emissions related sensor input and actuator output
- thermostats
- those affecting coolant temperature and preventing the vehicle from reaching normal operating temperatures

In 1998 model year, a new Federal OBD standard was adopted, eliminating the different status between California and Federal emissions certification.

The Society of Automotive Engineers (SAE)

OBD II mandates a standard scan tool connector for all vehicles and requires standard nomenclature for all OBD II codes. It provides standards for message formats and message priorities. It requires that all scan tools include test modes for fault code handling, provide real time vehicle information, readiness codes, and freeze frame information.

The Society of Automotive Engineers (SAE), in cooperation with the automobile industry, established the standards required for OBD II data transmission, diagnostic test modes, Diagnostic Trouble Codes (DTCs), and the scan tool required to retrieve these codes.

The SAE developed a series of recommendations referred to as "J Standards" in an effort to standardize all of these requirements throughout the industry.

SAE J Standards

As illustrated below, OBD regulations and technical standards have been developed with the cooperation of the automotive industry and the SAE. There are a number of applicable SAE standards that were developed to implement an OBD II plan that was mutually acceptable to all manufacturers.

Following is a list of these applicable standards and a brief description of the scope of each.

STANDARD	DESCRIPTION AND SCOPE
J1850 Serial Data Protocol	Defines SAE recommended data communication network interface.
ISO 9141 Serial Data Protocol	Defines International Standards Organization recommended data communication network interface.
J1930 Terms & Definitions	Establishes standard names, acronyms, and terminology for all electric/ electronic systems related to engine and emissions systems. Beginning with the 1993 model year (under OBD II), all service information began using this new technical jargon. A glossary of SAE and Lexus terms may be found in the Section IN of Lexus Repair Manuals.
J1962 Standard OBD II Diagnostic Connector	OBD II regulations defining diagnostic functions, test equipment, and the configuration of the diagnostic connector used to interface the generic scan tool with the on board computer. J1962 provides specifications for the size and shape of the DLC connector as well as pin locations and placement inside the vehicle.

STANDARD	DESCRIPTION AND SCOPE
J1978 Generic Scan Tool	OBD II regulations defining the diagnostic functions required to be supported by the vehicle on-board computer as well as the test equipment designed to interface with the vehicle diagnostic functions. J1978 provides the standards for scan tool manufacturers that outline the technical requirements for the generic scan tool. Among other things, these standards establish conformance guidelines that must be met or exceeded for a scan tool manufacturer to claim that a tool is OBD II compatible.
J1979 Diagnostic Test Mode & Basic Serial Data Stream	OBD II regulations that require certain information be available on the serial data stream and that specific test capabilities be programmed into the vehicle on-board computer system. The regulations further require that this data and these tests be accessible using the generic scan tool. J1979 provides the technical standards to implement OBD II. It provides the guidelines necessary to ensure proper operation of both the test equipment and the vehicle during diagnostic procedures.
J2008 Electronic Service Information Access & Data Format	Beginning with the 1993 model year, manufacturers were required to make available to anyone who wanted it, any repair information that is normally supplied to its dealers. This includes manuals, EWDs, technical service bulletins, and training information. This information should be readily available at a reasonable cost. Beginning with the ’96 model year, all service information was required to be available through electronic media so that anyone with a personal computer would be able to access information via an electronic database. J2008 provides a format for setting up this electronic service information system.
J2012 Diagnostic Codes and Messages	Accurate diagnosis and repair of emissions failures is more difficult with the lack of industry standardization. J2012 established a system of DTCs and fault identification messages which allowed manufacturers the flexibility to keep their own unique diagnostic codes and procedures while standardizing the codes by circuit and type of fault.

STANDARD	DESCRIPTION AND SCOPE
J2190 Enhanced E/E Diagnostic Test Modes and Serial Data Streams	During development of the OBD II standards for required diagnostic test modes, manufacturers requested that additional custom tests and information be made available via the OBD II serial data line, using the generic scan tool. J2190 establishes technical standards and guidelines for these enhanced data and test capabilities.

Overview of the OBD II System

Malfunction Indicator Lamp (MIL)

Normally, the Malfunction Indicator Lamp (MIL) on the dashboard of a vehicle illuminates when the ignition key is turned to the ON position and goes OFF when the engine starts.

When the Engine Control Module (ECM) detects a malfunction in the emission control system or in power train control components that affect vehicle emissions, it illuminates a MIL and simultaneously registers the system containing the malfunction into memory in the form of a Diagnostic Trouble Code (DTC).

In some cases, the MIL is illuminated when the fault is detected and is turned OFF once normal conditions resume. However, the DTC remains stored in ECM memory. An intermittent fault is a good example of this situation, as a fault has occurred in the circuit indicated by the code, however, the fault condition may not be presently occurring. A hard fault is one that has been detected by the system and is presently occurring. The DTC information is retained in ECM long-term memory regardless of whether a continuous (hard) fault or an intermittent fault caused the code.

In certain instances, referred to as a “two trip detection logic,” the MIL will illuminate if the malfunction has occurred for a second time. This two-trip detection system is intended to prevent the self-diagnostic system from setting false codes. Diagnostic codes using this feature require the malfunction to occur two times separated by an ignition OFF cycle before the code is set and the MIL illuminated.

In any case, once a malfunction is established, the MIL will illuminate and remain illuminated even after subsequent restarts as long as the fault is detected.

The MIL is turned OFF if three consecutive trips (three warm-up cycles) have passed without the fault recurring under the same conditions.

Once the condition of the vehicle returns to normal, the DTC may remain as an active code for 40 drive cycles. The code will be erased after 40 cycles if the failure is not detected again, but will remain in ECM history for an additional 40 warm-up cycles.

EPA regulations require that a MIL illuminate when a misfire is detected in a similar speed/load parameter for two consecutive trips within 100 engine revolutions of the onset, or in two nonconsecutive trips not more than 40 trips apart.

The MIL will flash if the level of misfire is sufficient to cause damage to the catalytic converter.

The purpose of the MIL is to improve emissions compliance by alerting the driver that a malfunction exists in the system.

Diagnostic Trouble Codes (DTCs)

Diagnostic Trouble Codes (DTCs) are a part of the design of ECM controlled systems that have self-diagnostic capability. The ECM constantly monitors sensors (inputs) and actuators (outputs) in the systems it controls. The On-board Diagnostic System generates a DTC stored in ECM memory when a fault has been detected in a monitored circuit.

Circuits are monitored for continuity, shorts, and normal parameter ranges. Diagnostic evaluation of a system may require certain conditions (or parameters) to be met. The ECM may initiate an operating strategy to test for normal operation of a system. Should the system fail to meet the criteria, a DTC will be set to identify a possible problem.

Normal parameters may be defined in a number of different ways. Listed below are some examples:

- Diagnostics of the oxygen sensor(s) for degradation and contamination is affected by monitoring switching frequency and lean-rich, rich-lean switch time.
- Fuel systems continually shift their base calibration to compensate for changes in atmospheric pressure, temperature, component variations, etc. This adaptive behavior is normal as long as it remains within the design limits of the system.
- The oxidation efficiency of the catalyst for the catalytic converter is determined by comparing the switching frequency of the main oxygen sensor to that of the sub oxygen sensor.

DTC information is used to identify specific circuits/systems related to a fault when a malfunction (or an incident of non-compliance) in the system is detected. It is important to note that a DTC **is an indication of a circuit problem** and does not necessarily imply a fault in an individual component.

Non-compliance may be defined as:

- an open or short in a circuit.
- a deviation from an established parameter in ECM memory.
- a deviation from an ECM calculated and projected optimal value appropriate under certain driving conditions (in the case of Lexus "Intelligent" systems).

The Lexus Diagnostic Tester retrieves all DTCs that have been saved by the vehicle's controllers and displays the following:

- A list of the current DTCs and their descriptors
- The ID of the ECU reporting them
- Total number of codes being reported

Diagnostic Trouble Codes (DTCs)

Fig. 4-41

As shown in the illustration:

- the number of stored codes is displayed in the upper right hand corner
- an arrow in the upper right of the display indicates that there ismore information available
- using the appropriate keys on the Diagnostic Tester, will allow you to scroll through the list of Trouble Codes stored

NOTE

An asterisk (*) next to the Trouble Code I. D. indicates that there is Freeze Frame Data associated with the DTC. An explanation of Freeze Frame Data will be covered later. Remember that the "trouble code" is only a coded deduction of the possible root cause of a problem. Interpretation of the information stored in the serial data corresponding to that code is the responsibility of the technician.

Lexus provides a system of Troubleshooting (Logic) Flow-charts and Diagnostic Trouble Code Charts (found in your Repair Manual), that assists you to identify the likely cause of a system malfunction.

Troubleshooting Flow Chart

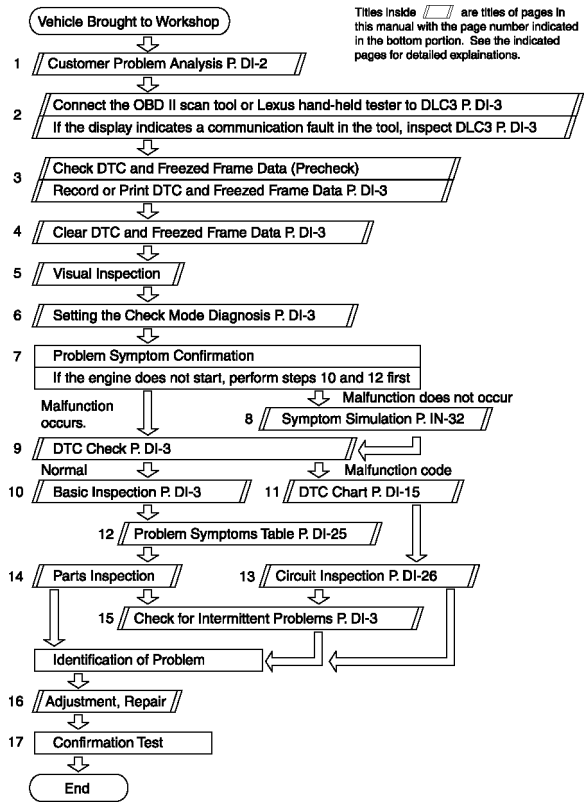

Fig. 4-42

Diagnostic Trouble Code Chart

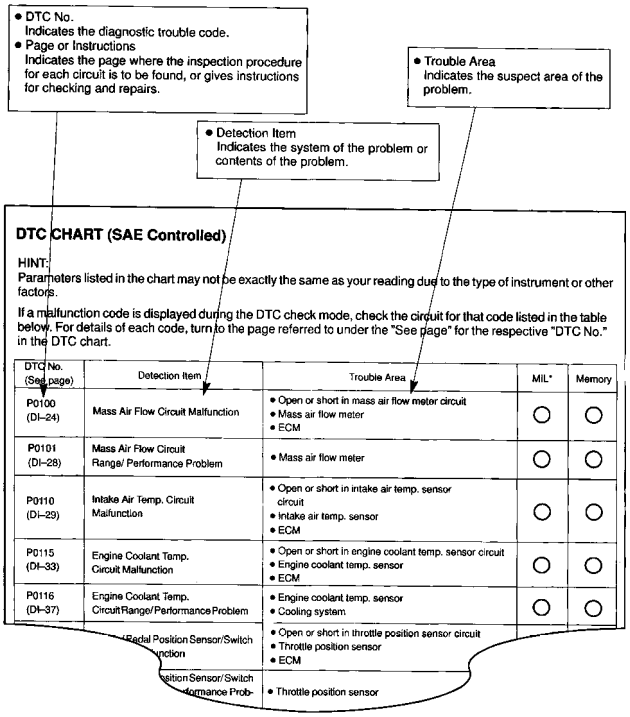

Fig. 4-43

After a repair has been made and re-checked to confirm that it was successful and that no new faults were introduced during the repair process, the DTC may be cleared from diagnostic memory.

NOTE

When the DTC is cleared, Freeze Frame Data is cleared from memory as well (see freeze frame data below).

SAE and Manufacturers' Controlled Codes

As indicated previously, the SAE established OBD regulations and technical standards. J2012 established a system of identification messages that allow manufacturers the flexibility to keep their own unique diagnostic codes and procedures while providing a standardized system for the industry.

Computers transmit information in distinct ways. A "bit" is a unit of computer information whose presence or absence indicates data in a binary (two-part) format or code. This information is equivalent to the result of a choice between two alternatives, electrically, the switch is either ON or it's OFF (numerically, 1 or 0). Information is transmitted by the ECM by switching the circuit ON and OFF to establish a code that can be received and interpreted (decoded).

A "byte" is a group of binary digits (often shorter than a word) that a computer processes as a unit. A byte is composed of eight bits of data (see the graphic illustration of this below).

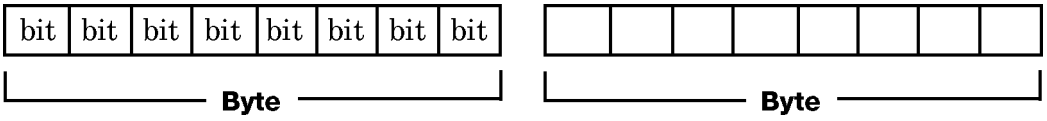

Diagnostic trouble codes are transmitted in two bytes of information for each code. The first two bits of the first byte of each code indicates the alpha numeric designator, P0-P3 for Powertrain, B0-B3 for Body, C0-C3 for Chassis, U0-U3 for Network Communication, followed by three digits. The second two bits of the first byte indicate the first digit of the diagnostic code (0 through 3). These alpha numeric designators identify the source system as illustrated below.

0000	P0	Powertrain codes SAE controlled
0001	P1	Powertrain codes Manufacturer controlled
0010	P2	Powertrain codes Reserved
0011	P3	Powertrain codes Reserved
0100	C0	Chassis codes SAE controlled
0101	C1	Chassis codes Manufacturer controlled
0110	C2	Chassis codes Manufacturer controlled
0111	C3	Chassis codes Reserved
1000	B0	Body codes SAE controlled
1001	B1	Body codes Manufacturer controlled
1010	B2	Body codes Manufacturer controlled
1011	B3	Body codes Reserved
1100	U0	Network Communication codes SAE controlled
1101	U1	Network Communication codes Manufacturer controlled
1110	U2	Network Communication codes Manufacturer controlled
1111	U3	Network Communication codes Reserved

The last four bits of the first byte and the entire second byte (eight bits) are the next three digits of the actual code reported as Binary Coded Decimal (BCD). These three digits identify the “code grouping.” These groupings contain a series of 100 sequenced numbers intended to further articulate (better define) the type of fault detected (reference the illustration below).

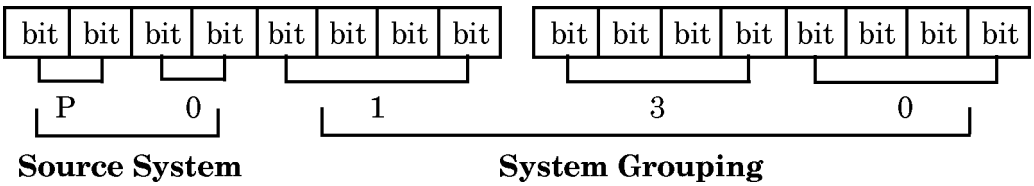

An example of powertrain system groupings is shown below:

SAE	MANUFACTURER	SYSTEM GROUPINGS
P0XXX	P1XXX	SAE Controlled
P01XX	P11XX	Fuel and Air Metering
P02XX	P12XX	Fuel and Air Metering
P03XX	P13XX	Ignition System and Misfire
P04XX	P14XX	Auxiliary Emission Controls
P05XX	P15XX	Vehicle Speed, Idle Control, and Auxiliary Inputs
P06XX	P16XX	Computer and Auxiliary Outputs
P07XX	P17XX	Transmission
P08XX	P18XX	Transmission
P09XX	P19XX	Reserved for SAE
P00XX	P10XX	Reserved for SAE

Taking into consideration all of the information encoded in the DTC, you can use the table below to decode. Notice that SAE controlled codes always have a zero in the second digit position of the DTC.

First Digit	Second Digit	Third Digit	Fourth & Fifth Digit
Prefix Letter of DTC Indicates Component Group Area	SAE or Controlled	Powertrain DTC Subgroup	Area or Component Involved
P = Powertrain	0 = SAE	0 = Total System	
B = Body	1 = Manufacturer	1 = Fuel and Air Metering	
C = Chassis		2 = Fuel and Air Metering	
		3 = Ignition System or Misfire	
		4 = Auxiliary Emission Controls	
		5 = Speed, Idle, & Auxiliary Inputs	
		6 = ECM and Auxiliary Inputs	
		7 = Transmission	
		8 = Transmission	
P	**0**	**1**	**30**

Serial Data Streams

The Lexus Diagnostic Tester identifies and compares deviations from established specifications expected of a particular system design and displays them as DTCs. In most cases, the identification is based upon how a circuit malfunction affects vehicle emissions.

Serial data is electronically coded information about sensor values, switch status, actuator operation, and ECM strategy. The term serial data implies that the information is digitally coded and transmitted in a series of data words by one computer (the ECM) and decoded and displayed by another computer (the Lexus Diagnostic Tester). As illustrated, this means that each sensor or actuator value is converted into a one byte (eight bits) binary word before it is transmitted to the receiving computer.

The receiving computer (the Lexus Diagnostic Tester) interprets each binary word as it is received and displays it on the Tester display as a voltage, temperature, speed, time, or other familiar unit that you can read and work with.

Serial data gets its name from the fact that data parameters are transmitted, one after another, in series across a single wire. The display on the receiving computer updates or refreshes once each data cycle after all the data has been received. The data transmission rate is referred to as the "baud rate," or the number of data bits that can be transmitted per second.

Three types of serial data that can be received and displayed by the Lexus Diagnostic Tester are: OBD, OBD II, and Vehicle Break-out Box data. The main difference between these data sources are:

- the specific parameters available on the data stream
- the speed at which data can be transmitted and refreshed on the Diagnostic Tester display.

In this course you will primarily be working with OBD II serial data. You will work with the Vehicle Break-out Box (V-BOB) in another course (Engine Control System Diagnosis). However, it's interesting to note that by connecting this attachment in series with the ECM, information from every wire connected to the ECM can be serialized and displayed by the Diagnostic Tester.

The Data Link Connectors (DLC) and Serial Data Streams

The Diagnostic Tester receives and interprets information transmitted from the ECM (via a Data Link Connector Cable) through a Data Link Connector (DLC) located on the vehicle. There are three Data Link Connectors used on Lexus vehicles: DLC 1 (check connector), DLC 2 (TDCL) and DLC 3 (J1962 connector).

Data Link Connectors

Fig. 4-44

DLC 1 is a square connector located in the engine compartment.

DLC 2 is sometimes referred to as the Total Diagnostic Link Connector (TDCL) and is a round connector located near the fuse box under the instrument panel on the driver's side of the vehicle.

DLC 3 is also called the J1962 connector, a reference to the SAE standard on which it was built. DLC 3 is a square connector usually located in or near the fuse box, under the instrument panel on the driver's side of the vehicle.

There are three Diagnostic Tester Data Link Cable Adapters (one for each Data Link Connector). The DLC 3 Cable Adapter has a 14-pin connector at one end that connects to the Data Link Cable of the Tester. The other end of DLC 3 Cable connects directly to the Data Link Connector in the vehicle.

When using DLC 1 or DLC 2 Cable Adapters, an additional component called a Vehicle Interface Module (VIM) is required between the Tester DLC Cable and the adapters. The other ends of DLC 1 and DLC 2 Cable Adapters connect directly to their appropriate Data Link Connector in the vehicle (reference the illustration).

DLC 2

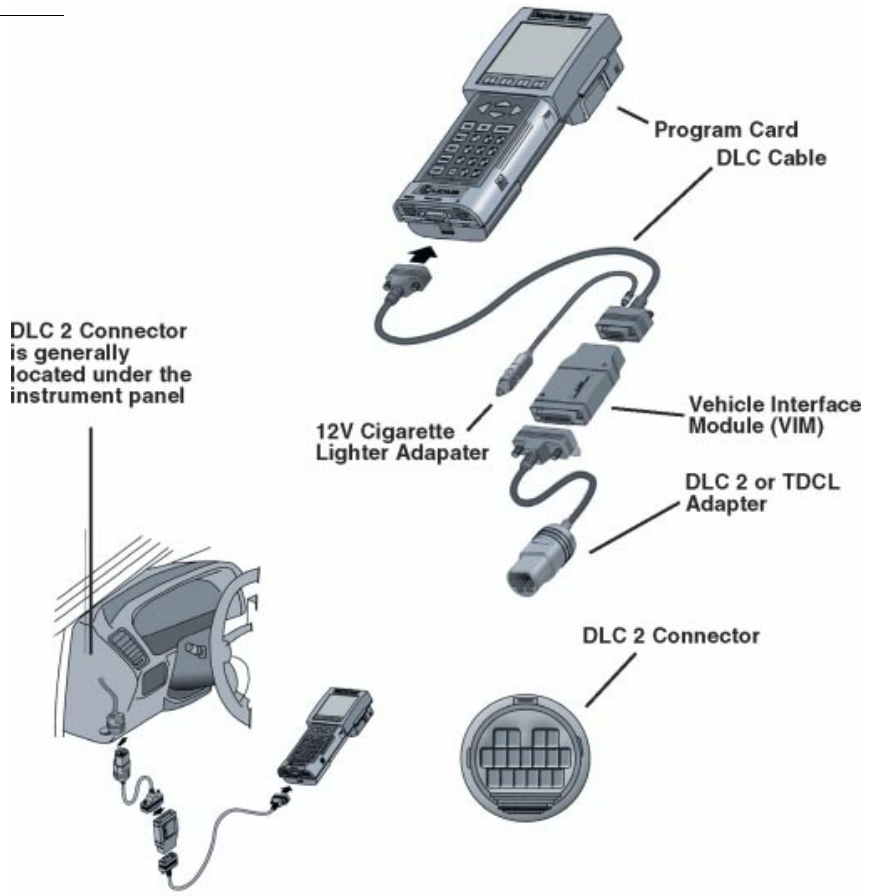

Fig. 4-45

DLC 3

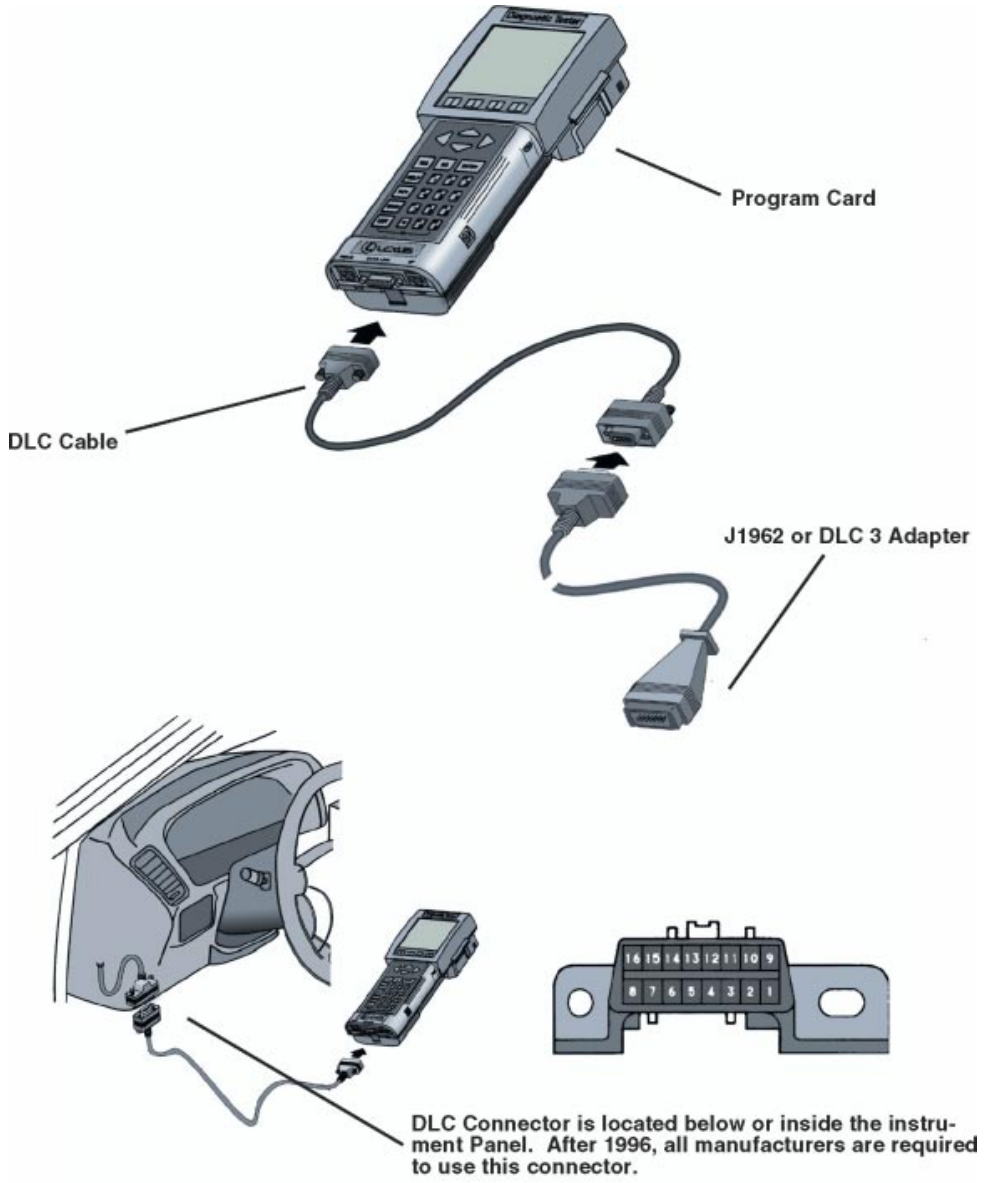

Fig. 4-46

In the past, OBD, a unidirectional (one-way communication between the ECM and the Diagnostic Tester) data stream requirements called for a serial data stream consisting of 14 to 20 data words. This data stream was accessed from either DLC 1 or DLC 2. DTCs were displayed:

- on the Diagnostic Tester.
- by grounding circuits (using a diagnostic check wire) at the DLC and reading the codes by counting the MIL flashes.

Diagnostic Check Wire

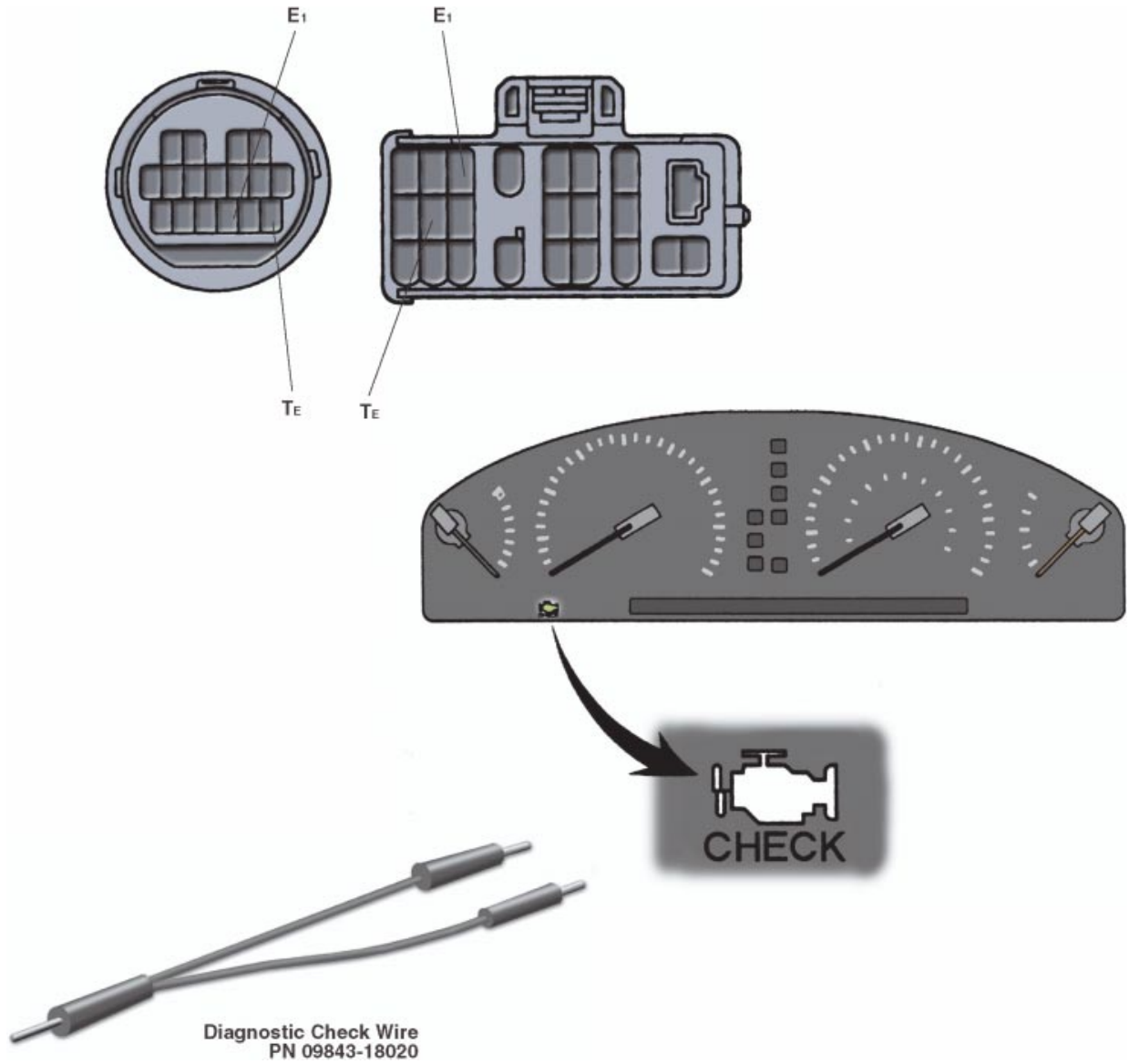

Fig. 4-47

Interpretation of flashing MIL Codes is a relatively easy task. Normal Codes are identified by a two-second delay followed by a rapid succession of equally-timed MIL flashes (reference the illustration). However, if a code has been detected, the MIL flashes identify the two-digit MIL identification number of the Trouble Code (in the example below, Codes 11 and 21).

Diagnostic Trouble Code Chart

Example Using Code 11 and 21

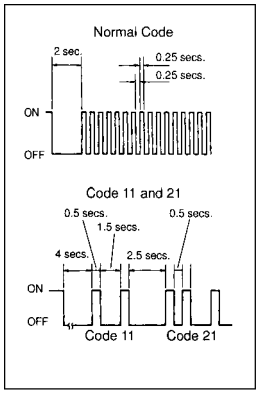

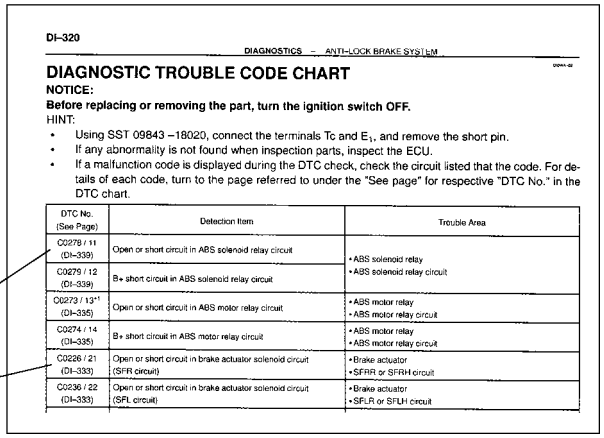

DI–320

DIAGNOSTICS – ANTI–LOCK BRAKE SYSTEM

DIAGNOSTIC TROUBLE CODE CHART

NOTICE:

Before replacing or removing the part, turn the ignition switch OFF.

HINT:

- Using SST 09843 –18020, connect the terminals Tc and E_1, and remove the short pin.
- If any abnormality is not found when inspection parts, inspect the ECU.
- If a malfunction code is displayed during the DTC check, check the circuit listed that the code. For details of each code, turn to the page referred to under the "See page" for respective "DTC No." in the DTC chart.

DTC No. (See Page)	Detection Item	Trouble Area
C0278 / 11 (DI–339)	Open or short circuit in ABS solenoid relay circuit	• ABS solenoid relay • ABS solenoid relay circuit
C0279 / 12 (DI–339)	B+ short circuit in ABS solenoid relay circuit	
C0273 / 13*1 (DI–335)	Open or short circuit in ABS motor relay circuit	• ABS motor relay • ABS motor relay circuit
C0274 / 14 (DI–335)	B+ short circuit in ABS motor relay circuit	• ABS motor relay • ABS motor relay circuit
C0226 / 21 (DI–333)	Open or short circuit in brake actuator solenoid circuit (SFR circuit)	• Brake actuator • SFRR or SFRH circuit
C0236 / 22 (DI–333)	Open or short circuit in brake actuator solenoid circuit (SFL circuit)	• Brake actuator • SFLR or SFLH circuit

Fig. 4-48

The two-digit number may be cross-referenced to a Diagnostic Trouble Code Chart that is used to decode the number. There is a Diagnostic Trouble Code Chart for each system listed in the DI Section of the Repair Manual. The Chart identifies the circuit registering the code and provides a list of probable components that may have initiated it.

Notice that the corresponding SAE controlled Chassis System Diagnostic Trouble Code “C0278” is also shown on this chart.

A page number is indicated under the Diagnostic Trouble Code in column one of the Chart. This page number references the location where a description of the circuit, a wiring diagram of the circuit, and an inspection procedure for the circuit may be found for that DTC and MIL flash code.

The OBD II data line is a bi-directional communication link (two-way communication between the ECM and the Diagnostic Tester) that is capable of transmitting and receiving data. This feature allows the Diagnostic Tester to operate system actuators and send commands to the ECM in addition to displaying system data.

The OBD II data stream consists of 50 to 75 data words. Data is transmitted at high speed as the Diagnostic Tester reads DTCs directly from the serial data stream accessed at DLC 3. OBD II (engine/emissions) Codes can *only* be displayed and retrieved using the Tester at DLC 3. However, manufacturer controlled non-engine/emissions codes (such as body or chassis codes) may be read off the Tester or off a flashing MIL by grounding the appropriate circuits at the DLC.

NOTE

DLC 2 may be used on OBD II equipped vehicles to retrieve some non-powertrain related trouble codes. Your Repair Manual will indicate which codes should be accessed using DLC 2.

Lexus has an enhanced data stream consisting of approximately 60 additional data words (**ENHANCED OBD**). The following screens represent a typical data stream (screen flow) observed when retrieving Trouble Codes using the Enhanced OBD II path. Please be aware that the Diagnostic Tester software is revised as technology changes. Some of the screens may change in order or appearance; however, the general navigation will remain relatively consistent with the example shown.

Screen Flow Enhanced OBD II

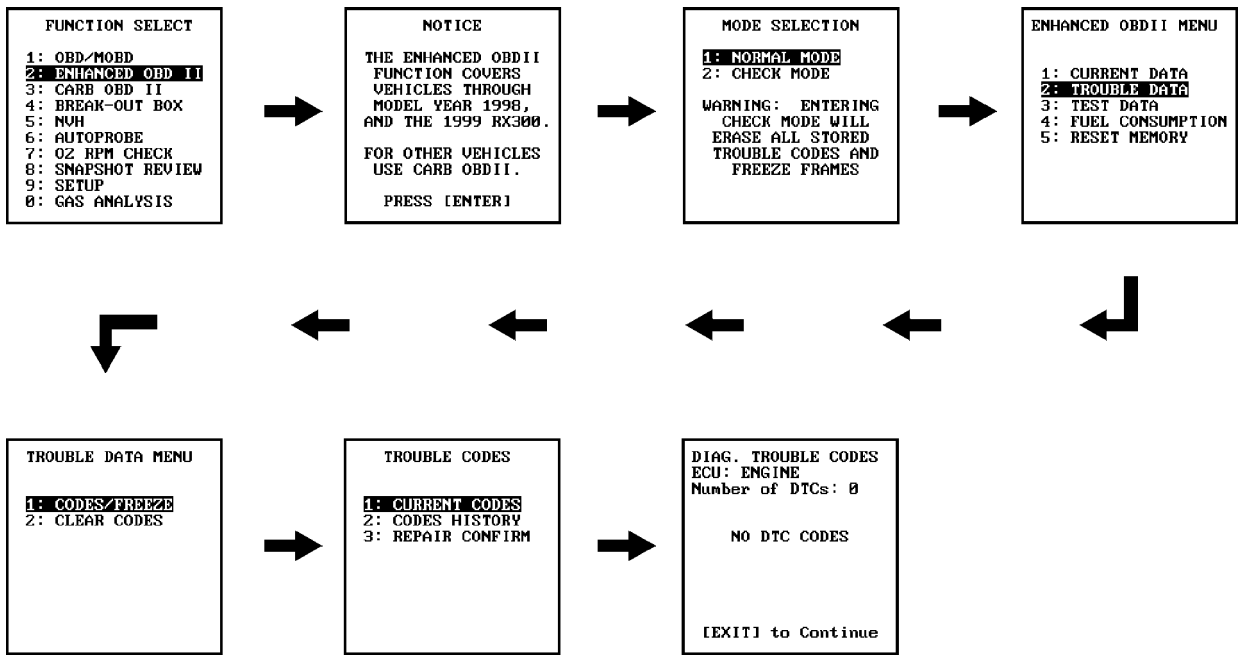

Fig. 4-49

Lexus also has a data stream generated by software dedicated to vehicles equipped with multiplexing **(MOBD)** and is able to diagnose Body, Chassis and other non-power train systems. The data stream observed when retrieving Trouble Codes using the MOBD path is very similar, though not identical to that illustrated for Enhanced OBD.

The following is an example of a typical data stream for all vehicles, 1998 model year and later, using MOBD communication protocol observing a Body System.

Notice that the data stream includes a series of four screens dedicated to vehicle model and model year selection called “Vehicle Select.” You will also discover that there is a data stream menu and display corresponding to a “Brand Selection” programming as well.

MOBD Data Stream for Diagnostic Trouble Codes

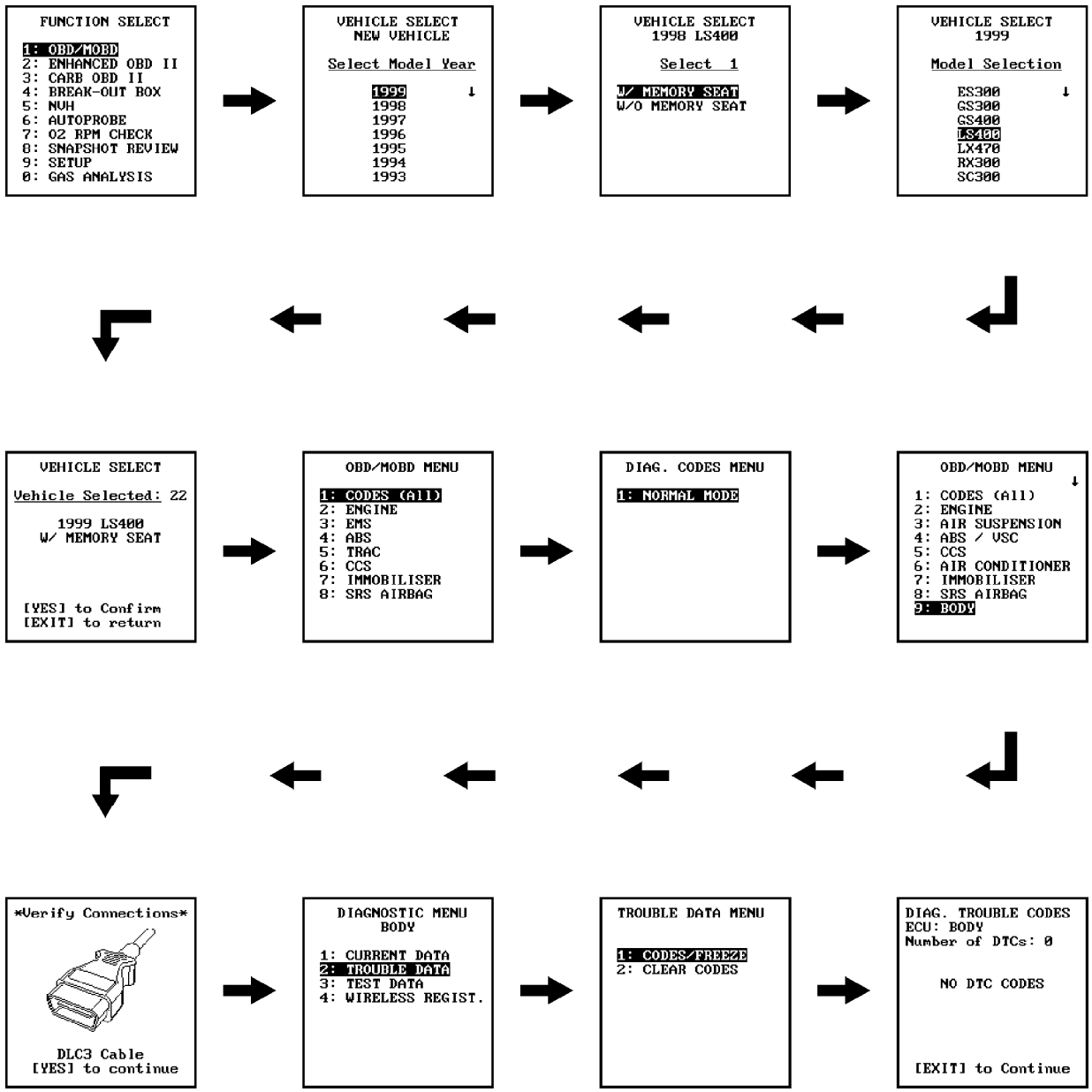

Fig. 4-50

The most efficient way to become familiar with all of Diagnostic Tester menu structures is to use the tool to find these different tests and data displays for yourself in the workshop. A Diagnostic Tool-Set Operator's Manual is available, and should be consulted whenever possible.

Lexus Diagnostic (hand-held) Tester

As you have seen, the Lexus Diagnostic Tester (also referred to as the Lexus Diagnostic Tool Set) is designed to interface with ECM of the vehicle to help you diagnose and repair electrical and electronic systems. It provides you with the opportunity to evaluate and diagnose a circuit or system by observing inputs and outputs to the ECM.

Access to information and display of that information is established by connecting the Diagnostic Tester to the appropriate Data Link Connector (DLC) for the specific vehicle model and test application that you intend to perform.

Although your use of the Diagnostic Tester at PDS is limited, a brief introduction of the tool and some of hands-on applications will be provided in this course. You will be exposed to more detail in subsequent Technical Training Courses.

Diagnostic Tester functions are determined by the software program card and cartridge installed. These cards are updated from time to time to comply with the development of new features and technological advances. The I/O cartridge is used to expand the input and output capability of the Tester and is kept in the Tester when performing functions. The program card may require changing dependent upon the system that you are evaluating.

Cartridge & Program Cards

Fig. 4-51

Diagnostic Toolset Operator's Manual

Fig. 4-52

Each new program card and cartridge is provided with operating instructions. These may be filed in the three-ringed Operator's Manual included with the Tester.

The Operator's Manual has all of the information that you will require to perform any function within the capability of the Diagnostic Tester. Additionally, a help key is located at the left of the keyboard which provides immediate on-line assistance.

The Tester has an AC/DC 12-volt power supply adapter that plugs into the wall outlet and a DC power cable that can be inserted into the vehicle's cigarette lighter socket. The Tester is powered directly by the vehicle battery through the DLC 3 (OBD II Connector) cable when the cable is connected to the vehicle.

NOTE

It is recommended to connect the Diagnostic Tester to the cigarette lighter adapter or the AC/DC adapter when using DLC 2.

Diagnostic Tester & Components

Fig. 4-53

The Diagnostic Tester is provided with a rechargeable battery that keeps it operating when it is not connected to an external power source. The battery trickle charges anytime the tool is connected to an external power source. The battery also serves as a backup power source when the engine is cranked or vehicle power is otherwise lost.

As indicated, there are three DLC connector cable adapters supplied with the tester. You will be using the DLC 2 (TDCL) Cable Adapter and the DLC 3 (OBD II Connector) Cable Adapter for this course. You will not be using DLC 1 Cable Adapter; however as indicated earlier, you will be accessing the DLC 1 on the vehicle to ground circuits and read codes by observing the MIL flashes.

Basic Navigation Keystrokes

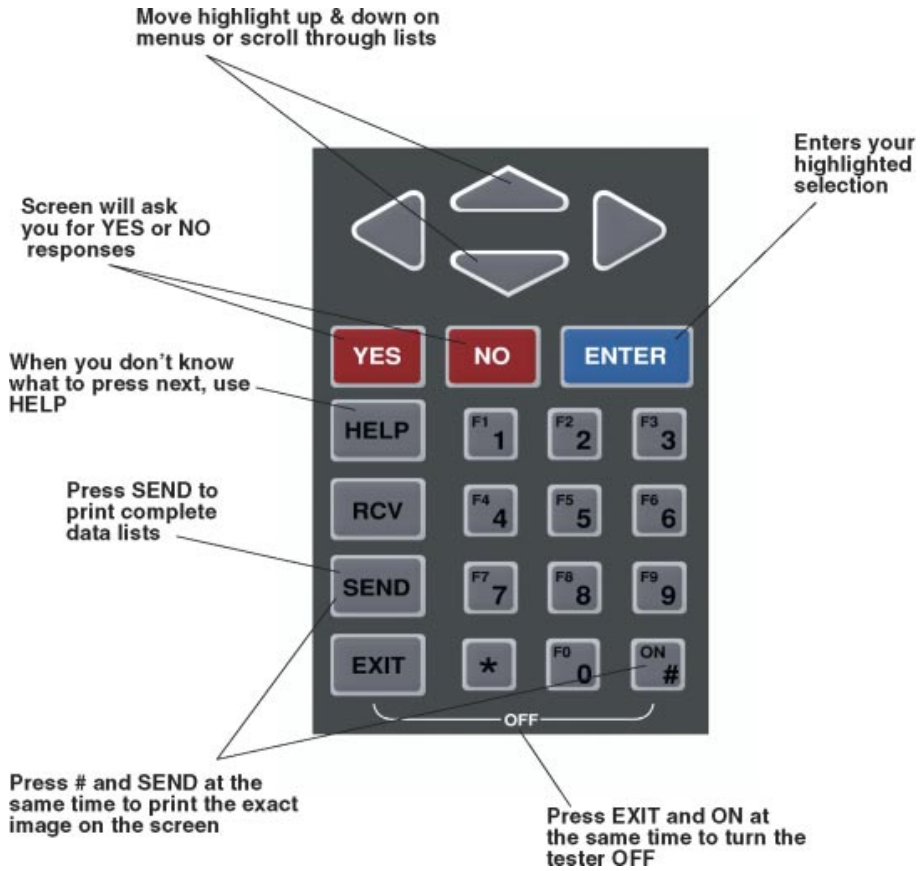

Fig. 4-54

To turn the Tester ON, connect the appropriate DLC Cable to the vehicle and depress the ON key at the keyboard.

To turn the Tester OFF, depress the ON key and the EXIT key simultaneously at the keyboard. Reference the illustration and the Operator's Manual for other keyboard features.

Serial Printer

The Diagnostic Tester has a compatible serial printer that is connected using the RS232 port located at the base of the Tester. It has an AC adapter that is plugged into the wall socket to power it. The printer provides you the opportunity to print:

- Diagnostic parameters
- Diagnostic Trouble Codes
- Test Results
- Display information (including bar graphs and plots)

To print all data, depress the SEND key on the Diagnostic Tester. To print a single screen, depress the # key and the SEND key on the Diagnostic Tester.

Serial Printer

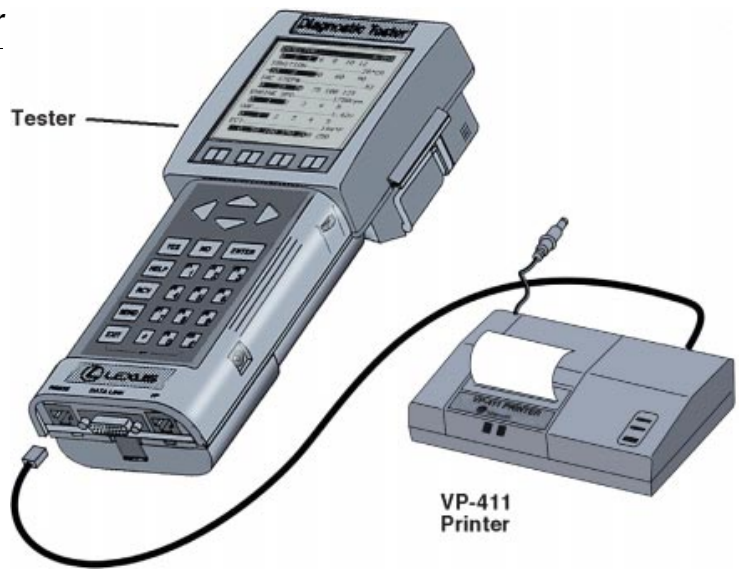

Fig. 4-55

Be sure to reference the Operator's Manual to familiarize yourself with the Tester, its components, and its capabilities in more detail.

Retrieving DTCs

A Pre-Delivery Inspection requires that you check for stored "trouble codes." A scan tool, such as the Lexus Diagnostic Tester, is the easiest and most efficient tool available in your dealership to access these codes.

To connect Diagnostic Tester to the vehicle and retrieve Diagnostic Trouble Codes:

- Turn OFF the vehicle ignition switch.
- Install the correct program card and/or cartridge (make sure Diagnostic Tester is turned OFF when program cards are removed).
- Connect the appropriate DLC cable to Diagnostic Tester.
- Choose the correct interface cable for the vehicle and functions you want to test.
  a. Connect the Vehicle Interface Module (VIM) between the DLC and interface cable when using DLC 1 or DLC 2 cables (DLC 3 cable does not require the VIM).
  b. Supply external power to Diagnostic Tester when using the DLC 2 cable (DLC 3 does not require an external battery source).
- Depress the ON key of the Diagnostic Tester Keyboard. The program card identification screen is displayed when the Tester is powered up.
- Press ENTER to continue to the FUNCTION SELECT Menu.
  a. All functions present in the program card are displayed on this menu.
  b. The up and down "arrow keys" on the Tester Keyboard are used to move between options.
  c. Highlight your selection (ENHANCED OBD II or OBD/MOBD).

- Select the FUNCTION of your choice by depressing the ENTER key.
- Identify the brand (Lexus or Toyota) and/or the vehicle selection when prompted to do so.

NOTE If the battery of the Diagnostic Tester has depleted to the point where the memory has been compromised, you may need to refresh the “Brand Selection” set up as illustrated:

Brand Selection

Fig. 4-56

Vehicle Section is effected as illustrated, starting from the VEHICLE SELECT Menu highlight the correct selections and press ENTER on the Tester Keyboard:

Vehicle Select Menu

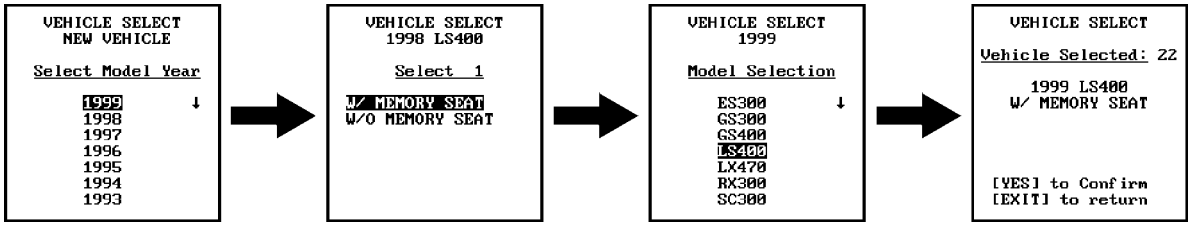

Fig. 4-57

- Continue from the FUNCTION SELECT Menu as follows for Enhanced OBD II:

NOTE

As indicated previously, screen displays may change as software is revised. The following examples of menu selections may change slightly over time as technology or diagnostic methodology changes. Follow the operator's manual for the most current version applicable to the task that you are performing.

MENU		SELECTION
FUNCTION SELECT	→	ENHANCED OBD II
MODE SELECTION	→	NORMAL MODE
ENHANCED OBD II MENU	→	TROUBLE DATA
TROUBLE DATA MENU	→	1: CODES/FREEZE
TROUBLE CODES	→	1: CURRENT CODES
DIAG. TROUBLE CODES ECU: ENGINE	→	DTC or NO DTC CODE

- Continue from the FUNCTION SELECT Menu as follows for OBD/MOBD:

MENU		SELECTION
FUNCTION SELECT	→	OBD/MOBD
MODE SELECTION	→	NORMAL MODE
ENHANCED OBD II	→	TROUBLE DATA
TROUBLE DATA	→	1: CODES/FREEZE
TROUBLE CODES	→	1: CURRENT CODES
DIAG. TROUBLE CODES ECU: ENGINE	→	DTC or NO DTC CODE

An example of the Data Stream is illustrated below starting at the Trouble Data Menu:

Retrieving DTCs

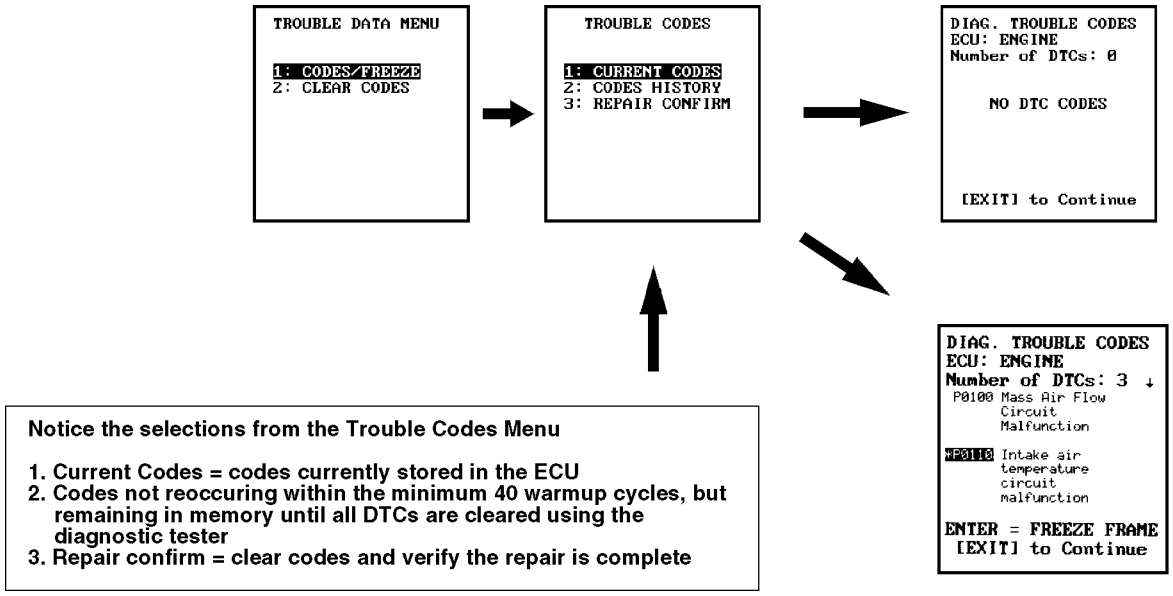

Fig. 4-58

Clearing Codes

Codes should always be recorded prior to erasing. This is always a good practice. If an erased code should reappear, it may indicate an intermittent problem. Codes can be erased by following the screen prompts as illustrated below:

Clearing Codes

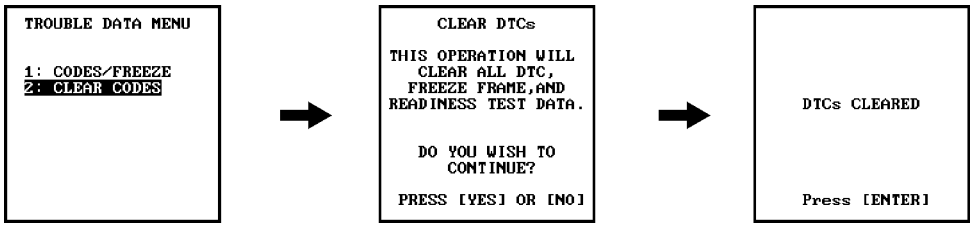

Fig. 4-59

Freeze Frame Data

When a DTC is stored, the engine speed, load, and warm-up status is stored in a retrievable serial data called Freeze Frame Data. Freeze Frame data is only available for certain DTCs.

Freeze Frame data does not change (it is static) and does not represent the current ECM state. It is information stored in the ECM of the vehicle and it indicates the state of the sensor and ECM outputs at the time when the DTC was recorded. The ECM is able to store up to two frames of data in Freeze Frame Mode.

The ECM uses Freeze Frame Data to identify and compare operating conditions. This information may be retrieved by the technician using the Lexus Diagnostic Tester to identify the conditions present at the time the DTC is set and may be useful from a diagnostic standpoint to reproduce and verify the DTC.

Freeze Frame Data

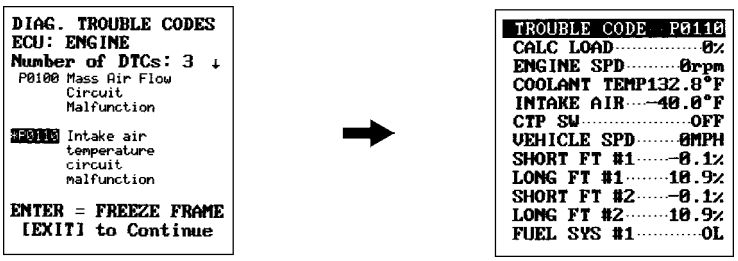

Fig. 4-60

Active Test

As indicated previously, OBD II serial data streams provide a bi-directional communication between the ECM and the Lexus Diagnostic Tester.

In Active Test Mode, the Tester can operate system actuators and send commands to the ECM as well as display system data. This provides access to a vast quantity of information and is particularly useful when diagnosing problems.

- It allows a “quick check” of sensors, actuators, and ECM calculated data. When checking sensor signals that may be out of normal range, this data allows you to quickly compare selected data to Repair Manual specifications or to known good vehicle data.
- When checking for intermittent fault conditions, it provides an easy way to monitor input signals while actuators and components are manipulated, heated, and cooled. This gives you the ability to control the actuators, while observing the sensors for the appropriate response. If the input sensor responds as is expected, normal operation of the circuit may be inferred.

The Active Test function allows you to verify proper operation using isolation techniques. Sensor inputs can be temporarily bypassed and output devices can be directly controlled.

When performing Active Test, a substituted value is used only for the duration of the diagnostic procedure and then reverts to the normal value determined by the control system when the test is concluded. This default is maintained to avoid the potential that a substitution might cause the control module to operate in an unsuitable or unsafe manner when the vehicle is driven.

Interpretation of Active Test results requires an understanding of:

- the system under diagnosis
- the cause and effect relationship between inputs (sensors), outputs (actuators), and other affected parameter values

Active Test is selected from the Test Data Menu. Your selection of Active Test provides you with a list of test item available. Only Active Tests supported by the test vehicle are displayed on this list. A typical Active Test screen flow for the seat is illustrated below:

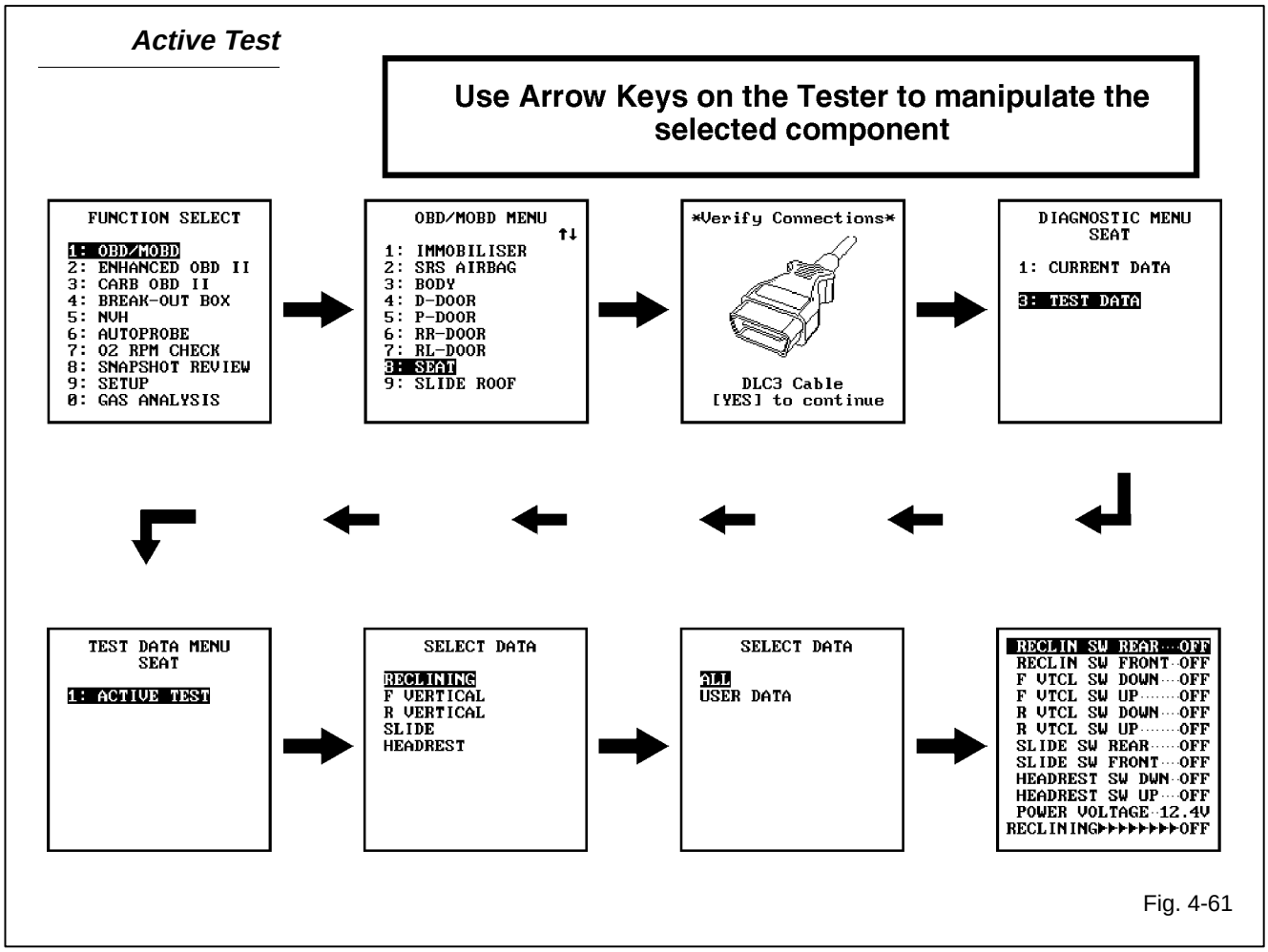

Fig. 4-61

Customized Body Electronics System (C-BEST)

On vehicles equipped with a Customized Body Electronics System (C-BEST), various body electronic system operations can be changed to accommodate the preference of the Lexus customer.

Customized Body Electrical System (C-BEST)

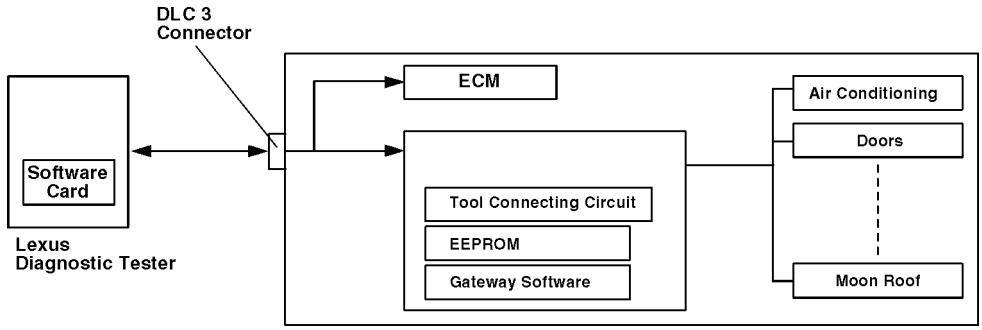

Fig. 4-62

The Lexus Diagnostic Tester is used to overwrite the Electronic Programmable Chip of the Body ECM (EEPROM) to customize the systems and functions that are designed to be changed.

Some examples of the systems and functions that can be modified are:

- the Power Window System which can be modified to enable or prohibit Key-Linked open and close operations
- the Illuminated Entry System which can be modified to enable or prohibit operation when the doors are unlocked
- the Wireless Door Lock Remote Control System which can be modified to enable or prohibit operation, activate or deactivate the Interior Light Function, enable/prohibit the Door Ajar Warning Beeper, enable or prohibit Panic Alarm Operation, etc.

Many more features may be customized. All features that may be customized on any particular model are identified in the Owners Manual as a feature that can be modified (see the example in fig. 4-63).

A comprehensive list of the available features for customization may be referenced in the Technical Service Information Bulletin (TSIB) relating to C-BEST in the Special Service Tools Section.

TSIBs are available at your dealership in hard copy and are accessible through the Technical Information System (TIS) network on-line. You will be using TIS in this course. It is a valuable source of information that is updated on a regular basis to include all of the most current information available.

Owner's Manual C-BEST Customized Features

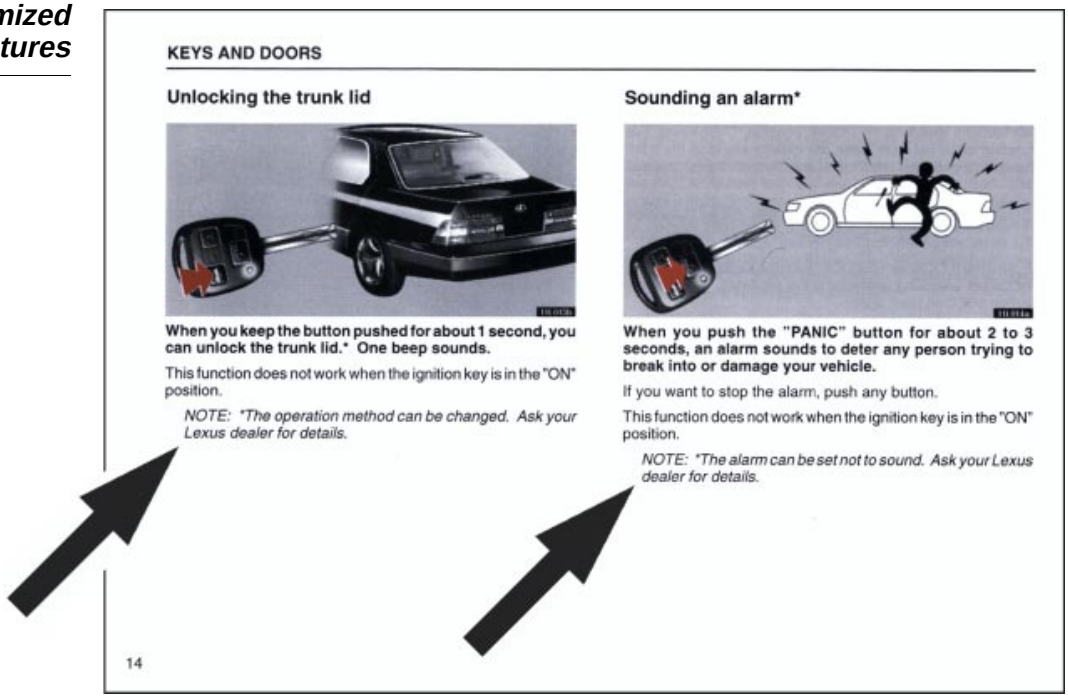

KEYS AND DOORS

Unlocking the trunk lid

When you keep the button pushed for about 1 second, you can unlock the trunk lid.* One beep sounds.

This function does not work when the ignition key is in the "ON" position.

*NOTE: *The operation method can be changed. Ask your Lexus dealer for details.*

Sounding an alarm*

When you push the "PANIC" button for about 2 to 3 seconds, an alarm sounds to deter any person trying to break into or damage your vehicle.

If you want to stop the alarm, push any button.

This function does not work when the ignition key is in the "ON" position.

*NOTE: *The alarm can be set not to sound. Ask your Lexus dealer for details.*

14

Fig. 4-63

Technical Service Information Bulletins (TSIB)

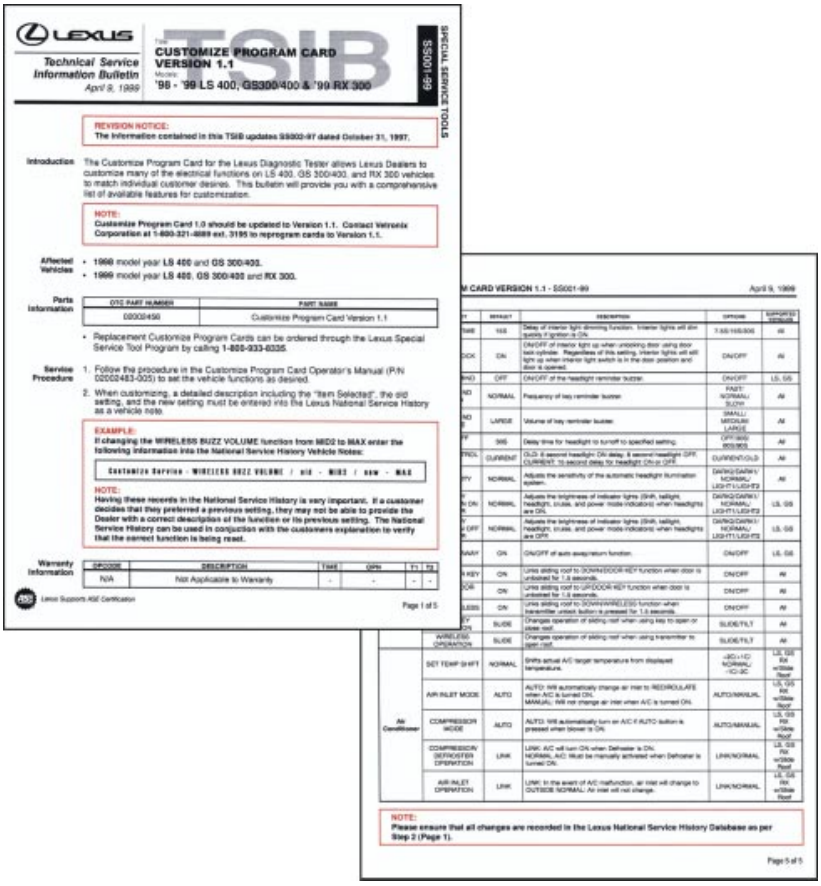
LEXUS

Technical Service Information Bulletin
April 9, 1999

TSIB

CUSTOMIZE PROGRAM CARD VERSION 1.1

'98 - '99 LS 400, GS300/400 & '99 RX 300

SS0001-99

SPECIAL SERVICE TOOLS

REVISION NOTICE:
The information contained in this TSIB updates SS002-97 dated October 31, 1997.

Introduction: The Customize Program Card for the Lexus Diagnostic Tester allows Lexus Dealers to customize many of the electrical functions on LS 400, GS 300/400, and RX 300 vehicles to match individual customer desires. This bulletin will provide you with a comprehensive list of available features for customization.

NOTE:
Customize Program Card 1.0 should be updated to Version 1.1. Contact Velronix Corporation at 1-800-321-4889 ext. 3195 to reprogram cards to Version 1.1.

Affected Vehicles:
- 1998 model year LS 400 and GS 300/400.
- 1999 model year LS 400, GS 300/400 and RX 300.

Parts Information

OTC PART NUMBER	PART NAME
00002450	Customize Program Card Version 1.1

- Replacement Customize Program Cards can be ordered through the Lexus Special Service Tool Program by calling 1-800-933-0335.

Service Procedure:
1. Follow the procedure in the Customize Program Card Operator's Manual (P/N 00002483-005) to set the vehicle functions as desired.
2. When customizing, a detailed description including the "Item Selected", the old setting, and the new setting must be entered into the Lexus National Service History as a vehicle note.

EXAMPLE:
If changing the WIRELESS BUZZ VOLUME function from MID2 to MAX enter the following information into the National Service History Vehicle Notes:

Customize Service - WIRELESS BUZZ VOLUME / old - MID2 / new - MAX

NOTE:
Having these records in the National Service History is very important. If a customer decides that they preferred a previous setting, they may not be able to provide the Dealer with a correct description of the function or its previous setting. The National Service History can be used in conjunction with the customers explanation to verify that the correct function is being reset.

Warranty Information

OPCODE	DESCRIPTION	TIME	OPN	T1	T2
N/A	Not Applicable to Warranty	-	-	-	-

Lexus Supports ASE Certification

Page 1 of 5

M CARD VERSION 1.1 - SS001-99 April 9, 1999

Additionally, it is always a good idea to check the C-BEST settings and the National Service History whenever a customer concern involves a system that can be customized to confirm that a change has not contributed to the reported problem.

Customizing

- Turn the ignition key to the ON position
- Connect the Diagnostic Tester and depress the ON key at the keyboard
- From the Program Card Identification Screen, depress the ENTER key
- Select 1. Customize from the MAIN MENU Screen
- Verify that the correct cable is connected at the vehicle by depressing the YES key
- Select the desired system to be customized from the FUNCTION SELECT Screen
- Select the item in the system that you want to customize from the ITEM SELECT Screen
- Modify the desired setting or parameter at the CUSTOMIZE Screen
- Depress the ENTER key to effect the change

An example of the typical screen flow is illustrated for two different customizations. One example relating to the wireless door lock system and the other to the air conditioning system:

C-BEST Data Stream

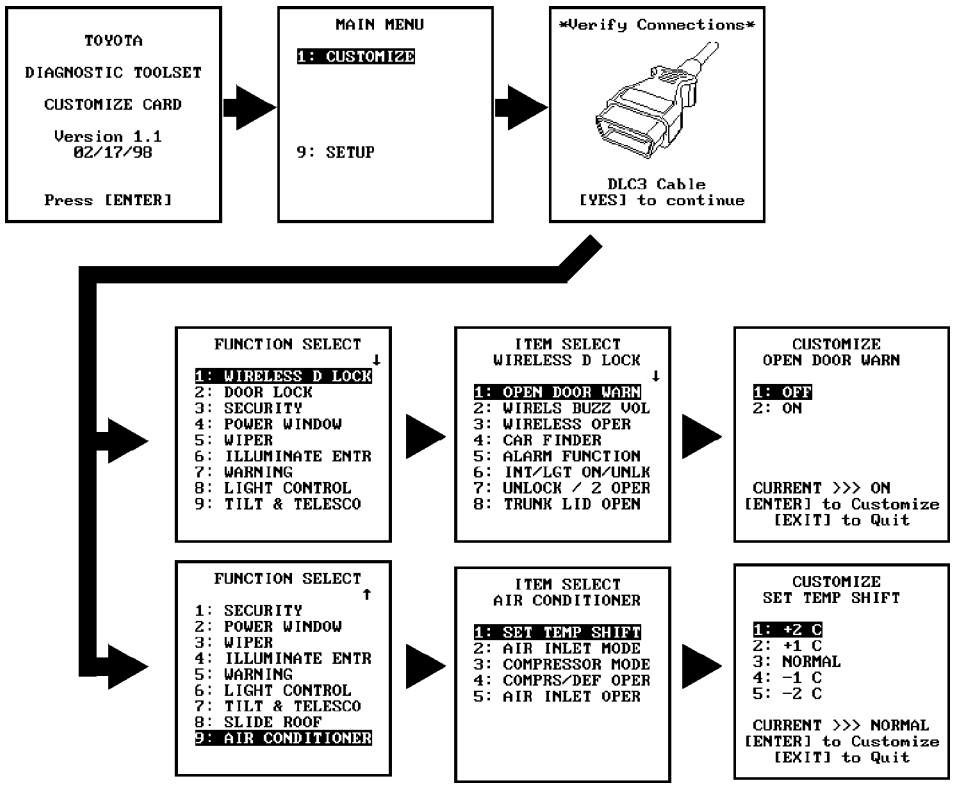

Fig. 4-65

NOTE

Once the new specification has been set by the customize process, it will be maintained as the default setting as it is stored in non-volatile memory. The battery in the ECM maintains the over-ride of the EEPROM.

Engine Immobilizer System

The Engine Immobilizer System is a theft-deterrent system that prohibits fuel delivery and ignition if an attempt is made to start the vehicle using an invalid ignition key. The system consists of:

- a transponder (ignition) key
- a transponder key coil
- transponder key amplifier
- an ECM

Immobilizer System Component Location

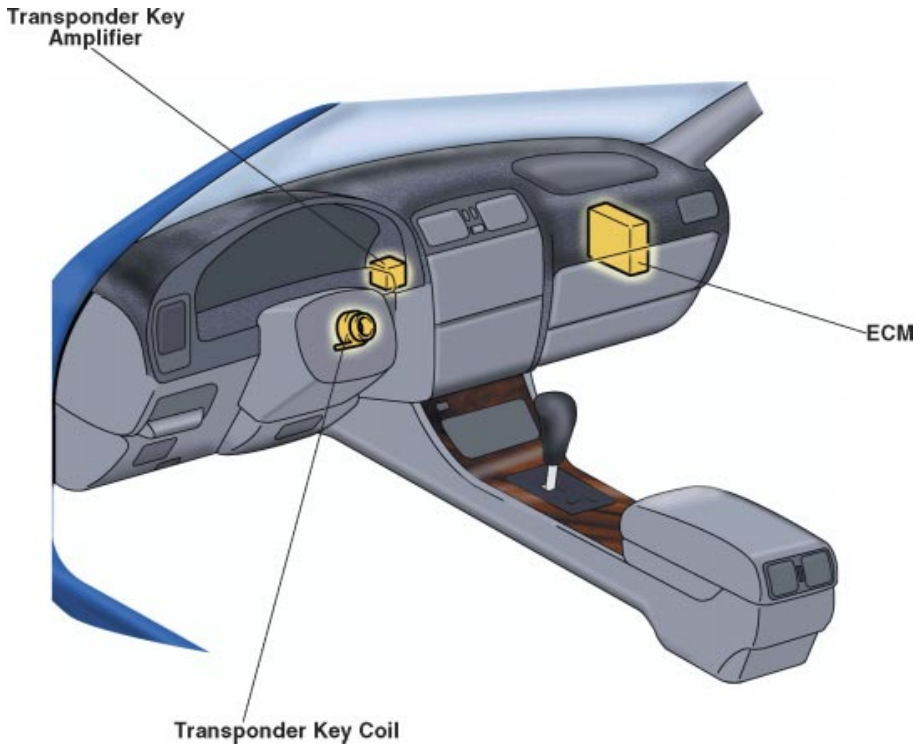

Fig. 4-66

Components of the System

The Ignition Key

The ignition key has a transponder chip embedded in the grip of the ignition key. Each chip contains an individual key code (ID Code). The key does not need an internal battery to transmit a key code as a condenser in the key is charged by the key coil.

The Transponder Key Coil

The transponder key coil is a ring-shaped coil installed around the ignition key cylinder. The transponder key coil transmits electromagnetic energy to the transponder chip in the key and receives the key code signal from the transponder chip.

The Transponder Key Amplifier

The transponder key amplifier, amplifies the key-code signal that has been received by the transponder key coil and sends it to the ECM.

The ECM

A microcomputer that controls the Engine Immobilizer System is enclosed in the ECM. It includes a code memory circuit and a code comparison circuit.

NOTE

Previous to the 1998 Model Year, the Engine Immobilizer System included a Transponder Key Computer (reference the illustration). The computer was eliminated to simplify the system; however the functions of the computer were integrated into the ECM. The basic operation of the system was not changed.

Engine Immobilizer System

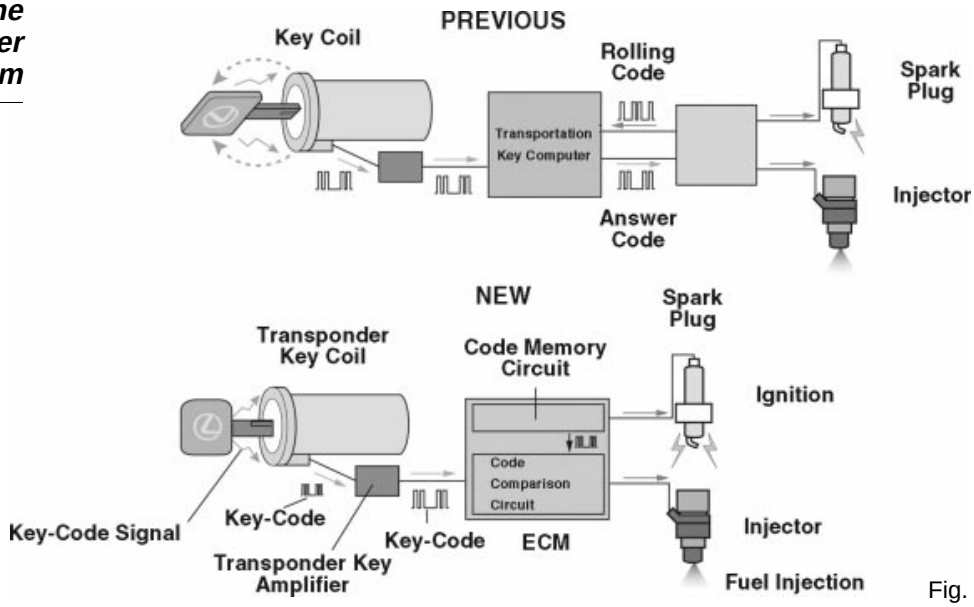

Fig. 4-67

System Functions

1. Immobilizer Set Function:
   The Engine Immobilizer System sets in order to prohibit the operation of the engine under the following two conditions:
   - When the ignition key is removed from the key cylinder
   - After 20 seconds have elapsed upon turning the ignition key from the ON position to the ACC or LOCK position
2. Immobilizer Unset Function: The Immobilizer unset function occurs when the ignition key is inserted in the key cylinder and is recognized by the microcomputer in the ECM as a legitimate key which allows the engine to start.
3. Immobilizer Cancel Function: The Immobilizer system is canceled when the ignition key has been inserted in the key cylinder and the ECM has permitted authorized operation of the engine.
4. New Transponder Key Code Function: The transponder key code function permits the registration of the key code of a new master or sub key to the ECM. A maximum of 10 different transponder key codes (7 for master keys and 3 for sub keys) can be registered in the ECM. This function is used if the ECM is replaced.
5. Additional Transponder Key Code Function: This function enables the registration of the key code for a new master or sub key, while retaining the key codes that are already registered. This function is used for the purpose of adding new keys.
6. Transponder Key Code Delete Function: This function deletes all the transponder key codes that are registered in the ECM except for the key code of the master key that was used to execute the delete function.

System Operation

The system is automatically set when the key is removed from the ignition switch and the security indicator light at the bottom of the instrument cluster flashes.

When the ignition key is inserted into the key cylinder, the engine ECM instructs the transponder key coil to supply the electromagnetic energy that enables the transponder chip to transmit a key-code signal. The coil builds a magnetic field that charges the condenser in the key.

The condenser in the transponder chip converts and stores this energy as electrical energy. The transponder chip then uses this electrical energy to transmit a key-code signal.

The key-code signal is transmitted back to the coil. It is amplified by the transponder key amplifier which transmits the amplified ID code signal to the ECM.

After the key code has been received by the engine ECM, it is compared to the key codes stored there. A code comparative judgement and engine start authorization process is initiated and the system is unset if the codes are recognized by the ECM.

If the codes are not recognized, the Immobilizer System remains set, the ignition and fuel system operation is inhibited, and the vehicle will not start.

NOTE

The flat credit card key does not have a transponder chip in the grip. Be aware, this key cannot be used to start the engine of a vehicle equipped with an Immobilizer System.

The Lexus Immobilizer System can be a customer sensitive issue. If all the Master Keys are lost, the only alternative is to replace the ECM and all of the keys.

Transponder Key Code Registration, Addition, & Erasure

A total of 10 keys may be registered to the Immobilizer System (7 master keys and 3 sub-keys). Registering additional transponder key codes to the system is accomplished in one of two ways using:

1. The Lexus Diagnostic Tester
2. A manual method, accelerator and brake pedal application

A master key is required to delete or add codes using either method.

The Key Code Utility is capable of performing the following three tasks for Immobilizer functions:

1. Key Registration of additional key codes for transponder keys (Master/Sub Keys) using the Registered Master Key.

Key Code Utility

Key Registration is used to register master and sub-master keys when:

   a. A new ignition cylinder and key set are installed

   b. A new lock cylinder set and ignition key cylinder are installed

   c. An additional master key is registered to the system (maximum total of 7)

   d. An additional sub master key is registered to the system (maximum total of 3)

2. Key Code Erasure which allows the user to erase all of the key codes for transponder keys except the Registered Master Key used during the procedure.
3. Auto Registration Closure which allows the user to close “Auto Registration Mode” when less than three keys have been registered.

Auto Registration Closure is used when a new ECM is installed, it is in the “Auto Registration Mode” from the factory. This mode allows the Transponder Keys to automatically register as they are inserted into the ignition cylinder. After a predetermined number of Transponder Keys are registered, the ECM closes “Auto Registration Mode.”

NOTE

The use of a non-transponder key during this function may damage the ECM.

The Immobilizer System can be accessed using the Lexus Diagnostic Tester. A diagnostic menu including Current Data, Trouble Data, and Key Code Utility is provided with the most current version of software.

Key Code Utility - Lexus Diagnostic Tester

All three menu selections may be accessed as follows:

1. Connect the Lexus Diagnostic Tester to DLC3 and depress the ON key
2. Insert a Registered Master Key into the ignition key cylinder and turn the ignition switch to the ON position
3. From the “FUNCTION SELECT” menu, select “OBD/MOBD”
4. From the “OBD/MOBD MENU”, select “IMMOBILIZER”

At the “DIAGNOSTIC MENU IMMOBILIZER” three sub-menu selections are available. They are:

CURRENT DATA
TROUBLE DATA
KEY CODE UTILITY

The CURRENT DATA menu provides an avenue for key identification. This avenue is recommended prior to attempts to perform any KEY CODE UTILITY functions. By following the screen prompts listed, the system identifies the type of key that is in the ignition cylinder:

5. From the “CURRENT DATA” menu, select “DATA LIST”
6. From the “SELECT DATA” menu, select “ALL”
7. The Transponder Key Type (master-key, sub-key, or NO) in the ignition cylinder will be displayed on the Tester screen

If the key is identified as a Master Key, touch ENTER on the Tester Keyboard which will bring you back to the “DIAGNOSTIC MENU IMMOBILIZER.”

8. You can now select “KEY CODE UTILITY” and follow the screen prompts to register and/or erase key codes.

NOTE

If the key is not a Master Key, the system will identify a sub-key or will display [NO] which indicates that:

1. The key in the ignition is not a registered key
2. The vehicle is not equipped with an Immobilizer

CURRENT DATA also allows you to view data lists and perform other functions that will not be covered in this course.

Immobilizer - Key Code Utility

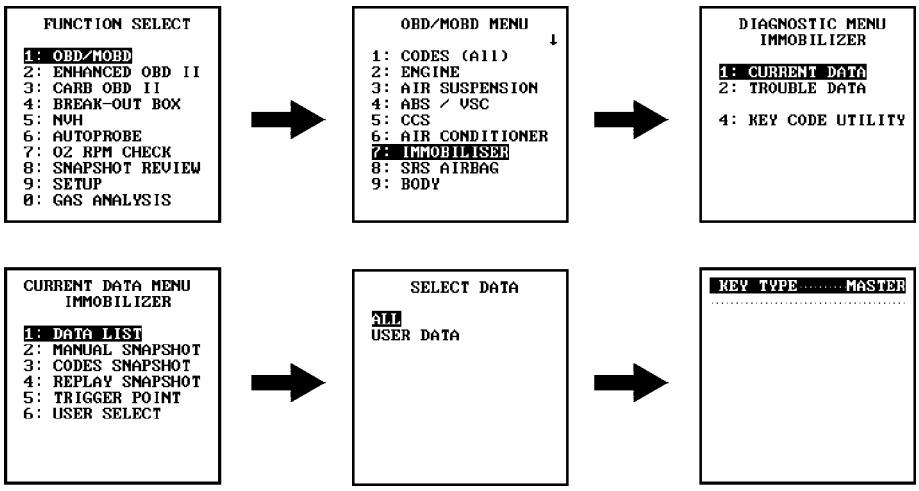

Fig. 4-68

Immobilizer Trouble Data - Lexus Diagnostic Tester

Diagnostic Trouble Codes can be viewed and cleared by selecting TROUBLE DATA from the MOBD DIAGNOSTIC MENU IMMOBILIZER. DTCs (when present) will display B2700 series Diagnostic Codes. As with other Lexus computer controlled systems, a Diagnostic Trouble Code Chart is available in the DI Section of your Repair Manual to assist your diagnostic efforts.

The serial data available for the system and procedures to view and erase Immobilizer DTCs is similar to that of Engine DTCs. However, since the Engine Immobilizer is integrated within the Engine ECM, all DTCs (including Engine DTCs) will be erased if you select the option to clear codes from the Immobilizer Menu.

As Diagnostic Tester software is revised and technology changes, screen flow order and procedural change may occur.

Check the TIS System for the most comprehensive and up-to-date information relating to the Engine Immobilizer System. New features to the system and updated transponder key utility procedures may be referenced in Technical Service Information Bulletins (TSIB) found in the Special Service Tools Section.

TSIBs are available at your dealership in hard copy and are accessible through the Technical Information System (TIS) network on-line.

Additionally, the Diagnostic Toolset Operator's Manual provides up-to-date information on new features and procedures applicable to the Immobilizer System. Software program cards are updated and each new version of program card is provided with updated operating instructions.

Key Registration & Transponder Key Code Erasure - Manual Method

There are two methods to register additional master and sub-keys to the Immobilizer System and there are two methods to erase transponder key codes.

The method using the Diagnostic Tester has been described above. Another manual method may be employed which involves alternately depressing the brake and accelerator pedals a predetermined amount of times while inserting the transponder key into the ignition key cylinder at timed intervals.

The Repair Manual outlines the exact procedure required to manually effect these two transponder functions. Always reference the manual for the vehicle that you are servicing for the correct procedure. An example of the format for the procedure is illustrated below:

Manual Method - Transponder Key Code Registration

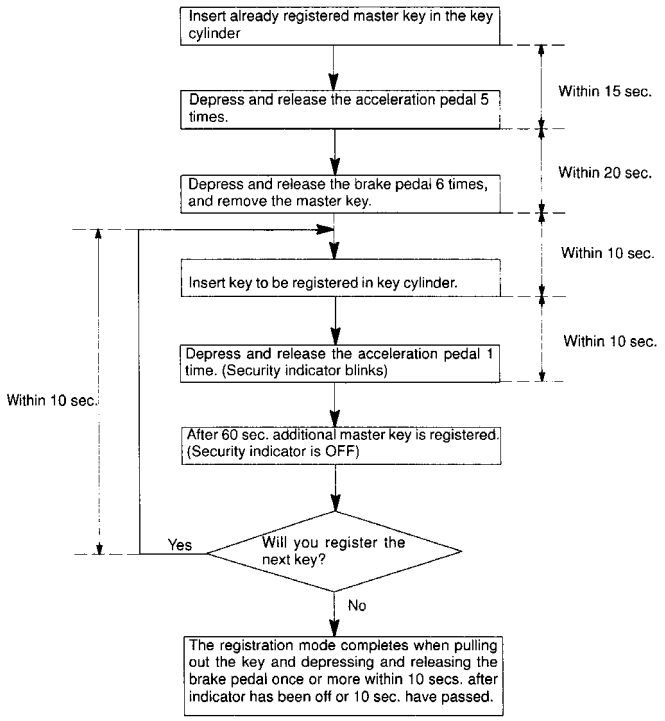

Fig. 4-69

Audio System

Large Size Multi-Information Display

The RX 300 vehicle features a liquid crystal screen with an audio system display, air conditioning system display, and clock, all illuminated on a single screen. The images of the characters are displayed on a dark background. This effect is produced as a result of character illumination using cold-cathode emission electrical wiring.

Audio Control Panel

Fig. 4-70

The display features a 12-hour clock display with an alarm function. A specialized indicator is used for the outside temperature display. The trip computer information display includes “average fuel consumption,” “current fuel consumption,” “average speed,” and “remaining driving time.” The display may be adjusted to seven levels of brightness and includes a night time light reduction control. Unlike the Lexus Electro Multi-Vision Display which features a touch screen, the liquid crystal screen in this system is only for display purposes.

Automatic Sound Levelizer (ASL)

ASL is a function that uses a microphone to detect noises and varies the volume and frequency characteristics of the audio system according to the noise level. This function enables the vehicle occupants to listen to music at an optimal tone and volume even if the vehicle noise (such as road or wind noise) increases during driving.

Audio Visual Communication-Local Area Network (AVC-LAN)

Lexus deluxe and premium grade audio systems are equipped with AVCLAN. AVC-LAN is an abbreviation that stands for Audio Visual Communication-Local Area Network. This system was developed in cooperation with 6 audio manufacturers (TMC, Aisin AW, Denso, Fujitsu-TEN, Pioneer, and Panasonic) associated with Toyota Motor Corporation and uses Toyota specific protocol.

The intention was to standardize signals such as audio signals, visual signals, switch indication signals and communication signals. The purpose for the standardization was to avoid the incompatibility that resulted when products from more than one manufacturer were combined in a single multi media system. The adoption of AVC-LAN standardizes the communication data used between the radio, amplifier, cassette player, and CD player/ changer.

The advantages of AVC-LAN are as follows:

- A common communication data signal protocol is established
- Software specifications are established and communication software is compatible
- Components are compatible, enhancing the system exchange and upgrade capability
- Registration requests of new equipment are transmitted on a LAN circuit
- Diagnostic Trouble Data is displayed

Component Compatibility and System Expandability

As indicated, the common communication standard of AVC-LAN provides for a mutual interchangeability of components between different manufacturer's audio equipment. An audio system may be created selecting components from any combination of manufacturers' products. Factory installed systems can be interchanged with commercially available audio components providing a wide variety of choice for the customer.

Newly developed components and innovative capabilities can be easily added or exchanged with the audio system mounted originally on the vehicle as a base. The receiver functions as a control interface for devices connected to it. An audio system that uses AVC-LAN performs a registration process to verify the audio components that comprise the system.

By pre-registering the switch operation of each component established as a part of the system in the receiver, each component may be controlled by the head unit (the receiver) without adding a transmitter later when additional components are introduced to the system. Thus, the expandability of the audio system is enhanced and parts exchange and up-grade capability is expanded as well.

Communication

In an audio system that uses AVC-LAN, audio units such as a cassette deck or a CD changer are connected by a communication bus that establishes communication via serial data signals. Addresses are used to identify the units in communication. The addresses can be broadly divided into two types; the physical address that is assigned to each audio unit (such as the cassette deck, CD changer, etc.; and the logical address that is assigned to the function that each unit provides (such as the radio function or the cassette function). The physical addresses are represented by 3digit numbers and the logical addresses are represented by 2-digit numbers.

AVC-LAN Communication

Fig. 4-71

Audio signals, video signals, display signals and communication software signals are transmitted as serial data between the components.

Diagnostic Capability

When a +B short or ground short is detected in an AVC-LAN circuit, the audio system will not function properly, communication is interrupted, and a trouble code is stored in memory. If the audio system is not equipped with a navigation system, the audio head acts as the master control unit (navigational systems are controlled by the Navigation ECU).

When a problem is detected by a vehicle audio system using AVC-LAN (such as a Pioneer made unit), a self-diagnostic function is available to

isolate the component which is the cause of the malfunction. As indicated, each unit incorporated in the system has its own ID number called a "physical address" (3-digit numbers). The probable cause of a condition is identified by a DTC which can be accessed by the technician. These error codes are displayed on the screen of the tuner.

Examples of "Physical Addresses"

Code Number (physical address)	Equipment Name
190	Radio receiver assembly (Audio head unit)
240	CD Changer (in Luggage room)
360	CD Changer (in center console and glove box)
440	Power Amplifier

Additionally, numbers are allocated for each function within any of the individual units, these numbers are called "logical addresses" (2-digit numbers not used for service information but for the registration process).

System Registration

System registration is performed when the ignition switch is turned to the ACC position. The vehicles AVC-LAN sends a registration request on the LAN circuit. A physical address is transmitted by the mode control portion of the system (integrated in the head unit). The audio units that comprise the system transmit the logic address in each unit. Receiving these addresses, the mode control portion verifies the connection and operation of each of the components of the system. When this process is performed, all functions are controlled by the receiver regardless of the combinations of the units that comprise the system.

An AVC-LAN system consists of audio units that are connected in parallel. Each of the audio units has a switch to connect the unit to the communication bus. The mode control portion of the system provides communication traffic control and transmits output ON, and output OFF instructions to each of these units when switching from one operating unit within the system to another.

Diagnostic Function

The diagnostic function consists of:

- LAN Check Mode which displays the code number (physical address) of the Tuner and connected equipment.

- System Check Mode which displays the malfunction judgement of the tuner and connected equipment.

AVC-LAN Diagnostic Function

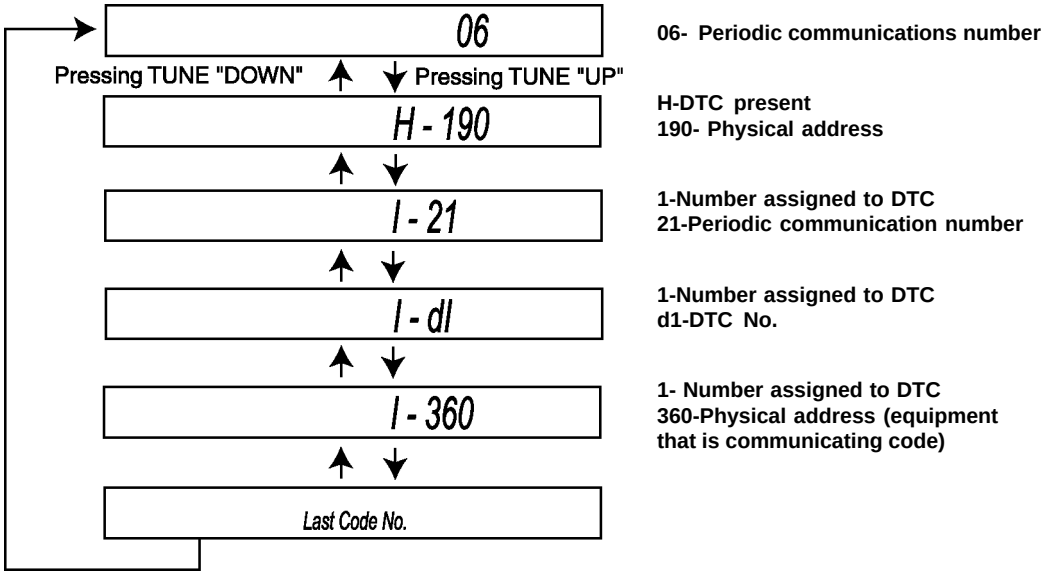

Fig. 4-72

- Diagnostic Memory Mode which displays the malfunction judgement of the tuner and connected equipment, the output codes stored in memory, and error codes of the tuner and connected equipment (displayed on the screen of the tuner).

LAN Check Mode

To access LAN Check Mode, set the ignition key to the ACC position and turn the radio OFF. While depressing the “1” and “6” buttons, press the “CD” button 3 times. The code numbers (physical addresses) that identifies the audio components will appear in the display.

NOTE To display the “physical addresses” of other audio components, use the “TUNE UP” or “TUNE DOWN” button to scroll.

System Check Mode

Access System Check Mode by depressing the “1” button. The system will perform a self-diagnosis, store up to six error codes, and display the first error code. Display other error codes by using the “TUNE UP” or “TUNE DOWN” button to scroll. Depress the “6” button to exit this mode and return to LAN check mode.

NOTE When no errors are detected “00” will be displayed.

Diagnostic Mode

To access Diagnostic Memory Mode, while in LAN Check Mode depress the "2" button. The results of the self-diagnosis performed on the radio and other components attached to the radio are stored. Diagnostic Memory Mode displays past DTCs and physical addresses. Codes are displayed smallest number to largest.

Up to six error codes are stored in memory, the system displays the first error code. Other error codes may be displayed by using the "TUNE UP" or "TUNE DOWN" button to scroll. Reference the Repair Manual and the appropriate TSIB for details on the available diagnostic codes for each unit. Depress the "6" button to exit this mode.

When no errors are detected "00" will be displayed.

NOTE

To erase the diagnostic memory, depress the "5" button for 2 seconds. Exit the diagnostic mode by depressing and holding the "CD" button for 2 seconds or by turning the key to the "OFF" position.

General Radio Reception Problems Caused by Radio Waves

Radio reception is one of the most common customer concerns, particularly in metropolitan areas. Radio interference can be caused by a phenomena called "noise" emanating from automobile electrical equipment such as spark plugs, the ignition coil, the alternator, etc.

Sometimes, reception problems may be the result of conditions and phenomena emanating from outside of the vehicle. These other types of interference might be caused by external electrical "noise" such as that generated by power lines, traffic signals, lightning, etc. However, some interference is caused by the nature of the radio waves themselves. Let's look at a few of these examples.

Radio service areas differ according to:

- The effects of the ionosphere (the upper atmosphere at an altitude of about 60 miles) which reflects certain types of radio waves back down toward the earth.
- Obstructions on the ground such as the interference of buildings and mountains that block or reflect a radio signal.
- The output of the broadcast station transmitting the signal, which broadcasts on different frequencies.
- The differences in the size of the service areas for AM and FM broadcasts. Ordinarily, the service area of an AM radio broadcast is greater that that of an FM broadcast.

Identifying these outside interference problems may save you diagnostic time, particularly if you cannot verify a customer involving poor reception. Remember that reception conditions change constantly as the vehicle travels.

Radio signals have a limited range. The farther the vehicle is from the radio station's transmitter, the weaker its signal. Another factor worth mentioning, the differences in the size of the service areas for AM and FM reception. Generally, the service area of an AM radio broadcast is greater than that of an FM broadcast.

Station Swapping may occur when a FM signal is interrupted or weakened due to another strong station nearby on the FM band. The radio may tune in the second station until the original signal can be picked up again.

Fading is a phenomena that causes the sound of the radio to be alternately strong and weak. The medium or short waves used for AM broadcasts are easily reflected by the ionosphere particularly during the night time. Waves that are reflected off the ionosphere interfere with the waves arriving directly from the radio station (near-distance fading) or with each other (long distance fading), causing the waves received at the vehicle to be alternately strong and weak.

"Fade Out" occurs because FM radio waves are of higher frequencies than are AM radio waves. Because of this, they bounce off buildings and mountains or other obstructions and tend to gradually disappear or fade away as the vehicle passes behind the obstruction.

Another type of interference called "Multi-Path" is caused when a signal from the broadcast transmitter antenna bounces off buildings and mountains and interferes with the signal that is received directly. This causes sound that fades out intermittently, or scratchy static-like distortion. This bouncing may also result from two or more signals reaching the antenna at slightly different times. When this happens, the signals may cancel each other out, causing a momentary fluttering noise or loss of reception. Decreasing the treble level may reduce static and fluttering.

Electronic signals received by the antenna will reach the radio through the core wire of the coaxial cable. To prevent any noise wave from mixing with the radio signal, the coaxial cable is covered with a mesh wire called "shield wire". This shield wire shelters the noise and transmits it to ground. A grounding failure in the shield wire can cause unwanted noise. Check the shielded wiring.

These distinctions are important to note when investigating a customer concern regarding audio interference. Find out if the interference in the audio system occurs at a specific time of day or near a specific place when it occurs. Check to be sure that the components to the system are properly installed and that no non-authorized parts and wiring have been added to the system. Check the antenna mast and the antenna connections. Check the antenna cable for cuts, shorts, and pinching. Check the ground connections at the antenna base and radio chassis.

Lexus Navigational System

The Lexus Navigation System operates through a dash-mounted touchscreen display, and employs the satellite-based Global Positioning System (GPS) and electronic maps to identify travel routes and points of interest in many major cites.

Signals transmitted from GPS satellites are received through an on-board antenna and used to determine the vehicle's present position. The system is also capable of conducting "dead reckoning" calculations identifying the vehicle's position using input from the vehicle's network of sensors and based upon the last known position, vehicle speed, and direction of travel.

The Lexus Navigation System also provides voice instructions to guide the driver through the route and reach the selected destination. The system offers the driver multiple ancillary features such as optimal route searches (minimizing highway or toll-road travel) estimated time of arrival, etc. The multi-function display is also used for climate and select audio system controls.

Navigational System Diagram

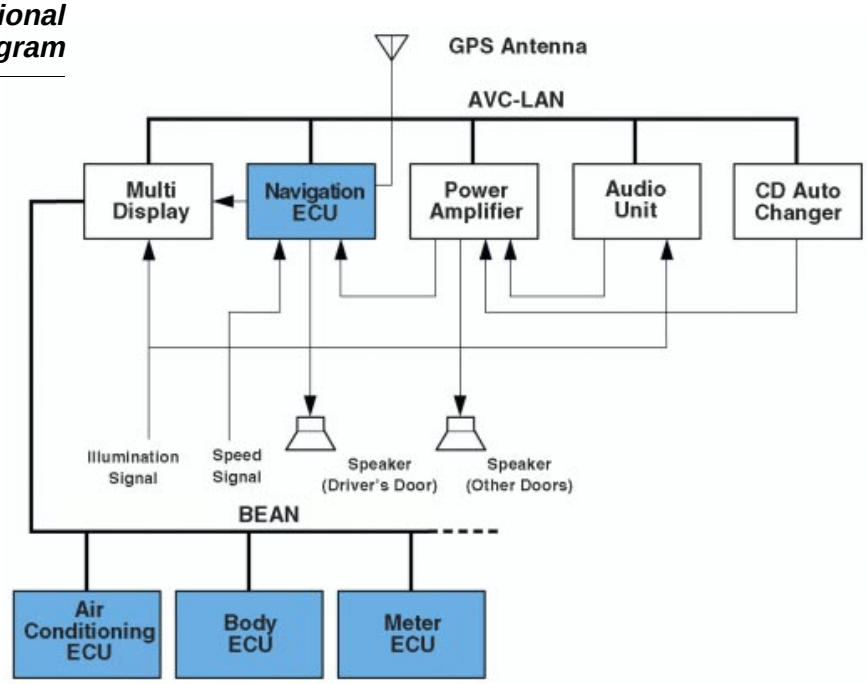

Fig. 4-73

Multi-Display (Lexus Electro Multi-Vision Display)

The Electro Multi-Vision Display (EMV) is comprised of a screen display portion, A/C temperature portion, outside air temperature portion, control switch portion, and a communication portion.

Screen Display

The ECU screen display portion of the system contains a color liquid crystal display panel that shows the navigational display screens and control

displays for the Audio and A/C Units. The liquid crystal display panel is made of Thin Film Transistor (TFT) liquid crystal. A back light using a fluorescent lamp is provided behind the liquid crystal display panel because the liquid crystals themselves are passive elements with no light-emitting capability.

The diagonal measurement of the display screen is 6 inches.

A/C Temperature

The air conditioning temperature portion of the system displays the temperature settings for the driver's and passenger's side air conditioner.

Outside Air Temperature & Clock Display

The outside air temperature and clock display portion of the system has an outside temperature gauge that has a range between -22° to 122°F.

Control Switch

The control switch portion of the system is comprised of two types of switches:

- Panel switches to select screen displays and to perform various types of air conditioner settings. These are located around the outer perimeters of the liquid crystal display screen.

Control Switch

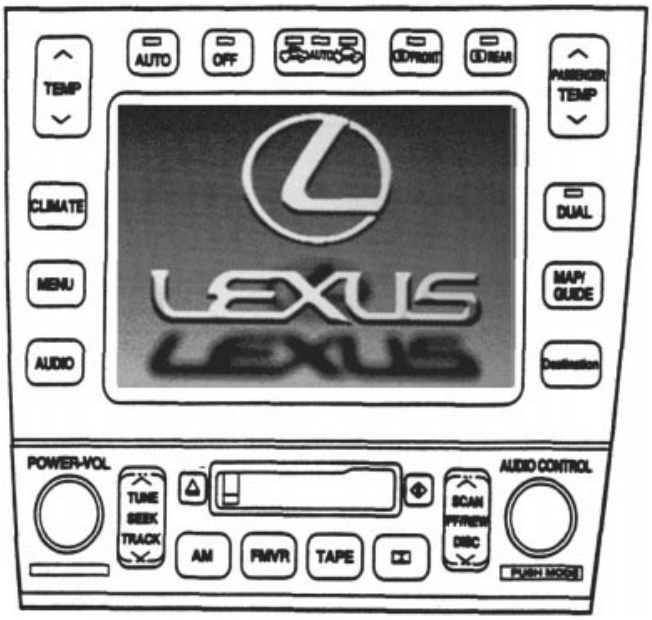

Fig. 4-74

- Display switches illuminated on the liquid crystal display touch screen.

Destination Address

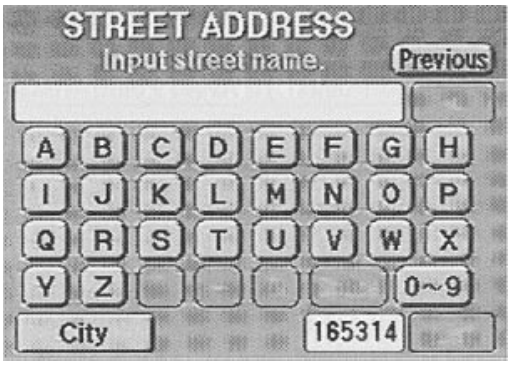

Fig. 4-75

NOTE

Active keys on this screen are colorized to distinguish them as “active buttons or keys.” When they are transparent (clear or “ghosted out”) they are considered “inactive buttons or keys.”

Touch Screen Construction

Thirteen infrared LEDs and photo transistors located along the periphery of the display screen (in both vertical and horizontal directions) provide a total of 169 intersecting points which can detect the point of contact of a persons finger on the screen. The system is able to do this by sequentially turning ON the infrared LEDs and phototransistors in a prescribed cycle. A “touch switch” scans infrared rays in front of the screen and detects the screen selection (button on the screen) based upon the position where the infrared rays are interrupted by the finger.

Touch Screen Construction

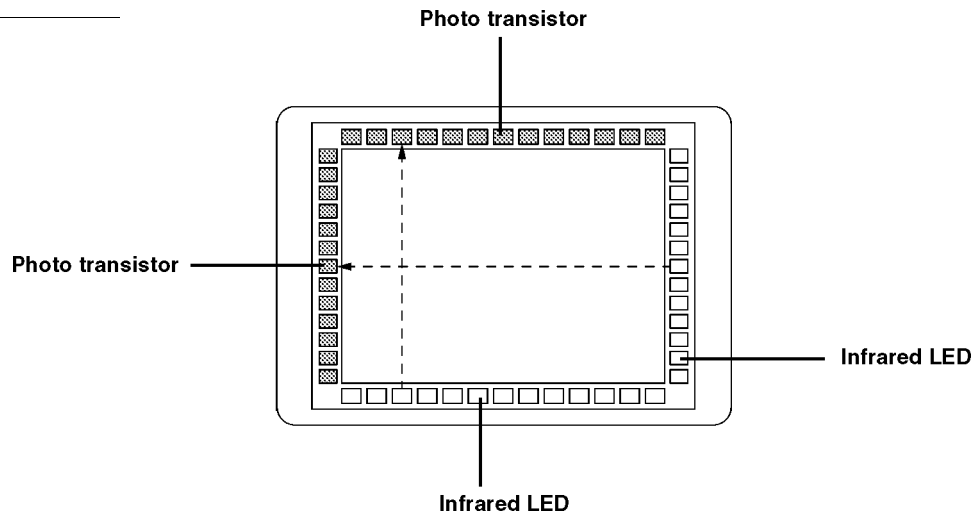

Fig. 4-76

Communication Control

The communication control portion of the system is composed of the following:

- The Audio Visual Communication - Local Area Network System (AVC-LAN) which is a type of communication among the components of the Electro Multi-Vision system (EMV).
- The Body Electronics Area Network (BEAN) which is a type of communication system that exchanges information among vehicle components based upon operating conditions.

The Navigation ECU controls the system by communicating with the units that form part of the EMV System and with the AVC-LAN. The application software and the map data are stored on the hard disc drive. The software and the map data can be updated by removing the hard disc drive from the ECU and overwriting the data.

System Operation

The Navigation ECU displays the vehicle's position and route to a destination on the multi-display screen described above. It calculates the vehicle's position based upon the following:

- Detection of the vehicle position based on the signals received from GPS satellites and Map Matching logic.
- Detection of the vehicle's direction of travel based on the signal from the gyro sensor in the ECU.
- Detection of the distance driven based upon speed signals that are stored in the ECU.

The Navigation ECU & GPS Detection of Vehicle Position

The navigation ECU contains a GPS receiver, a vibration gyro, and a hard disc drive. It calculates the position of the vehicle on the principal of a 3point measurement referred to as triangulation. Triangulation is a trigonometric operation used to find a position or location by using the bearings of two fixed points a known distance apart.

GPS satellites are able to transmit continuous orbital signals and radio wave transmissions. The satellites are also equipped with high-precision clocks. The navigation ECU also contains a clock, and can interpret the radio wave transmissions received from the satellites.

The GPS Antenna on the vehicle receives the radio wave signals transmitted by the GPS satellites. A GPS receiver demodulates the signals and outputs them to the navigation ECU.

The length of time that elapses for the transmission of the radio waves of a satellite to reach the antenna of the vehicle can be determined. Each of these time measurements is multiplied by a calculation called the "luminous flux" (the rate of transmission of luminous energy, approximately 186,000 miles per second) to determine the distance from the satellite to the antenna of the vehicle.

The Navigational System measures the length of time that elapses for the transmission of radio waves from **three** satellites to reach the antenna and determines these distances.

Because the positions of the three GPS satellites is known, and based upon the radio wave signals and the distances derived from them, the position of the vehicle can be determined at the point where three spheres (who's centers are the respective satellites) converge at a single point.

However, due to differences between the clocks of the satellite and the ECU, the three spheres do not converge at a single point. So, the ECU uses another satellite to synchronize its internal clock to the clocks of the satellites and calculate the three point convergence and therefore the position of the vehicle (reference the illustration in fig. 4-77).

GPS Satellites

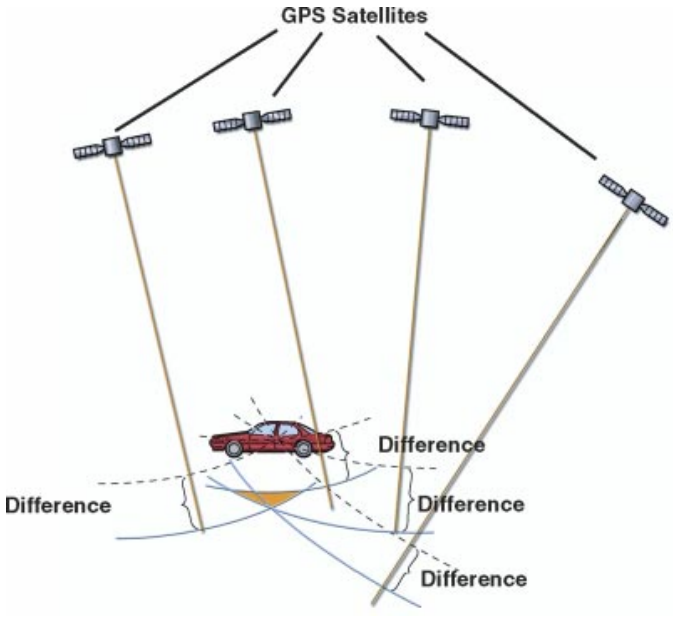

Fig. 4-77

The Determination of Driven Distance & Direction of Travel

The Lexus Navigation System detects driving distances and the vehicle's direction of using speed sensors and a gyro sensor that is contained in the navigation ECU. The vehicle's direction of travel is based on a signal from the gyro sensor (contained in the navigation ECU) that detects yaw rate (side to side movement) in the vertical axis direction of the vehicle.

The gyro sensor is constructed of three piezoelectric ceramic pieces that are affixed together to form a triangle.

NOTE

A piezoelectric ceramic piece becomes distorted when voltage is applied to it, and generates a voltage when an external force is applied to distort the ceramic piece.

Alternating current voltage is applied to the "**exciting** piezoelectric ceramic piece" which causes the "**detection** piezoelectric ceramic pieces" to distort. This distortion generates voltage. The voltage is one factor used to detect yaw rate (side to side movement).

Gyro Sensor

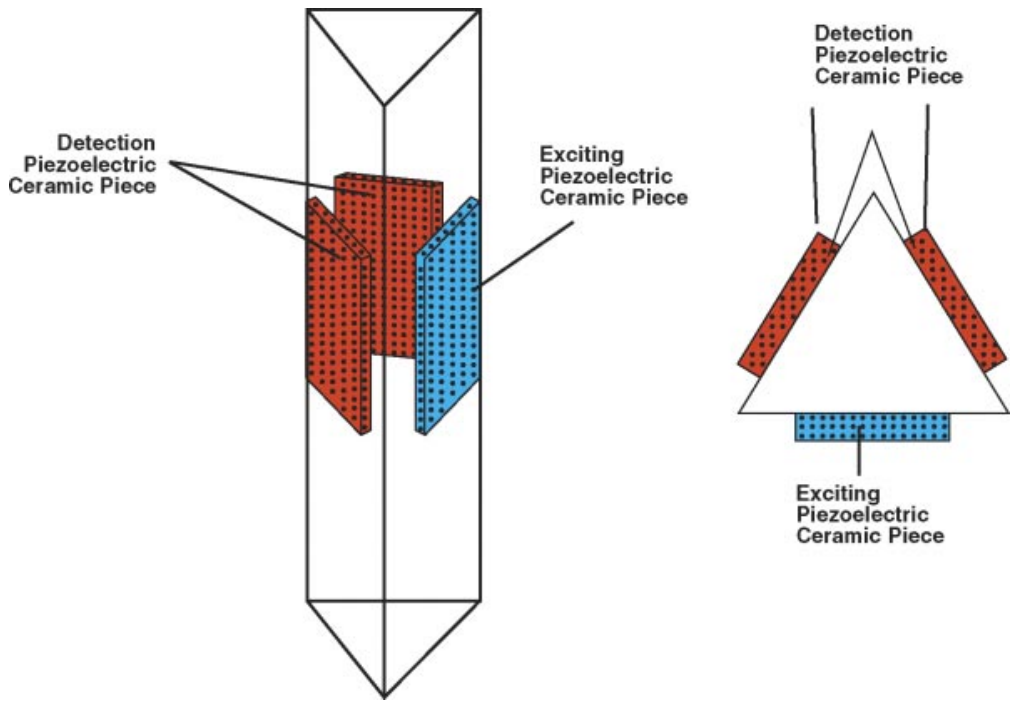

Fig. 4-78

Yaw rate is determined based upon the output voltages generated. The navigation system compares **two voltages** to calculate yaw rate:

- The voltage generated when the alternating current is applied to the "exciting piezoelectric ceramic piece" causing the "detection piezoelectric ceramic pieces" to distort as mentioned above.
- An output voltage based upon the principle of Coriolis Force is generated when the vehicle corners (i.e. output voltage goes down on left turns and goes up on right turns).

NOTE

As a result of the earth's rotation, a force is generated which deflects objects to the right in the Northern Hemisphere and to the left in the Southern Hemisphere. This force is referred to as Coriolis Force. The details of this process are not relevant for our purposes, it will be sufficient to note that these two voltages are the inputs used by the navigation ECU to determine the yaw rate of the vehicle.

The detection of the distance traveled is based on the wheel speed sensor signals, vehicle speed, last known position, and time.

Display Functions of the Lexus Navigation System

The GPS Voice Navigation Function combines the radio wave navigation system (determining present position derived from the GPS signals), and the self-contained navigation system, that detects driven distance and direction of travel using speed sensors and the gyro sensor (contained in the navigation ECU).

It then indicates the vehicle position on the map displayed on the touch screen using information from the hard disc drive and guides the driver through the route from the present position to the destination on a map and pictogram, as well as with voice guidance. The voice instructions are transmitted from the power amplifier via the front left speaker.

The Audio Screen Display Function consists of:

- The mode screen, that indicates the operating condition of the music source (AM, FM, Cassette, CD) and controls various functions
- The sound mode screen, on which sound quality is displayed and adjusted

The Air Conditioner Screen Display Function displays the A/C adjustment screen to control the air outlet mode and the blower speed.

The On-Board Computer Screen Display Function displays the function setting screen that is related to navigation, the display image quality adjustment screen, etc, and changes the settings of the functions. It also displays trip information, such as average vehicle speed and average fuel consumption.

The Diagnosis Screen Display Function checks the connecting and operating conditions and displays the results. If the system malfunctions, it stores a diagnostic code in Static Random Access Memory (SRAM).

Diagnostic Mode

There are two ways to access the navigational system diagnostic menu; one using diagnostic check wire and the other is using switch operation.

To access the diagnostic menu using the check wire method, with the ignition switch in the ACC or ON position, use the diagnostic check wire (SST 09843-18020) to jump terminals TC and E1 of DLC 1.

To access the diagnostic menu using the switch operation method, with the ignition switch in the ACC or ON position, depress the “Climate” and “Audio” switches simultaneously and turn the light control switch to OFF, TAIL, OFF, TAIL, and OFF. The diagnostic function can support a maximum of six diagnostic codes.

The diagnostic screen indicates:

- The date the code was detected
- The time of the occurrence
- The identification of the problem as a DTC number that identifies the problem component

If the same diagnostic code occurs, the data when it occurred is revised to reflect the most recent information. When more than six are detected, the oldest code will be deleted in the respective order. If no codes are present, “O.K.” is displayed

A Diagnostic Trouble Code Chart is located in the DI Section of the Repair Manual which indicates:

- The diagnostic item
- The diagnostic content
- The items most suspect as the root cause (in order of most likely)
- An indication if the code is stored in memory

Other interesting diagnostic menu screens and related function checks are available for the Lexus Navigational System (such as touch screen, GPS information, etc.). Reference the Repair Manual DI Section for more detailed information.

The following chart lists the main functions of the Lexus Navigation System.

Function	Outline
Navigation Function	• Displays the present location and the direction of travel. • Zooms in and out, rotates, and moves the map. • Measures and corrects the present location. • Sets the destination. • Displays the route. • Select route search condition. • Zooms in at intersections and gives voice instructions. • Displays the remaining distance to the destination and the expected time of arrival. • Automatically resumes a route search. • Searches for points of interest in the vicinity of the present location. • Switches between day and night display. • Registers, corrects, deletes, and displays Marked Points, Home and Avoid Areas. • Enables or disables the display of the direction of travel. • Corrects the coefficient of distance. • Adjusts the sound volume of guidance voice.
Audio Screen Display Function	• Displays the operating condition of audio system.
Air Conditioner Screen Display Function	• Displays the operating condition of the air conditioner.
On-Board Computer Screen Display Function	• Displays trip information/memory. • Displays screen quality adjustment. • Deletes screen display. • Displays the possible continuous travel distance. • Adjusts the clock.
On-Screen Display Function	• Displays the operating condition of audio system. • Displays system diagnosis.
Diagnosis Screen Display Function	• Displays various types of coefficient settings.

Limitations of the Navigation System

The Global Positioning System is developed and operated by the U. S. Department of Defense. The system provides an accurate current vehicle position using 3 to 4 satellites and has a certain level of inaccuracy built in for security reasons. While the navigation system will compensate for this most of the time, occasional positioning errors (up to 300 feet) can and should be expected. Generally, position errors will be corrected within a few seconds.

The GPS signal may be physically obstructed leading to inaccurate vehicle position on the map display. Tunnels, tall buildings, trucks, or even the placement of objects on the instrument panel may obstruct the signals.

The installation of window tinting may obstruct GPS signals because most window tinting has some metallic content that can interfere.

Item, which may contribute to inaccurate inputs to the system, may affect operation such as:

- Worn, under inflated, or over inflated tires
- The installation of tire chains
- Driving on slippery road surfaces
- Driving on a spiral road
- Using tires that are smaller or larger than factory specifications

Combination Meter with Multi-Information Display

A Multi-Information Display is included with some Lexus combination meters. The following items are displayed:

1. Trip information that indicates driving conditions such as:
   a. average vehicle speed
   b. average fuel consumption
   c. instant fuel consumption
   d. average fuel consumption after refueling
   e. driven distance after refueling
   f. running time
   g. average speed
2. Select Warning Items such as:
   a. low oil pressure
   b. brake wear
   c. left front, right front, left rear, and right rear door open
   d. trunk open
   e. check VSC
   f. tail lamp failure
   g. low engine oil level
   h. low washer fluid
   i. moon roof open
   j. headlight leveling

Combination Meter with Multi-Information Display

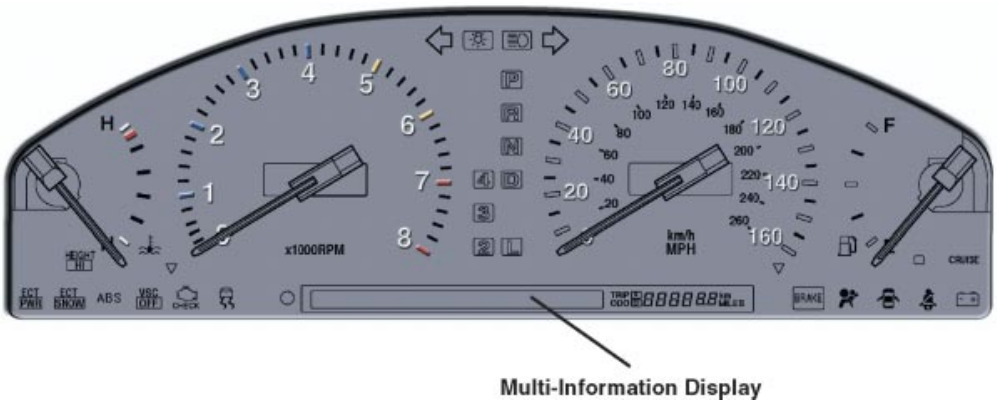

Fig. 4-79

The cruise information provided on the multi-information display is described in more detail in the table below:

Item	Details
Continuous Drivable Distance	During engine operation, the “continuous drivable distance data” (based on the fuel consumption rate and the residual fuel data) is calculated at approximately 1.9 mile intervals and shown on the display. The display is updated at approximate half-mile intervals.
Average Fuel Consumption	Average fuel consumption data, (calculated by the CPU based on the cumulative driven distance and the cumulative fuel consumption volume from engine start to engine stop) is displayed in the form of average fuel consumption. The display is updated every 10 seconds, and the data that forms the basis of the calculation is renewed every 10 seconds. Even after the engine is turned off, the fuel consumption data is stored in memory as cumulative data until the data is cleared.
Instant Fuel Consumption	Instant fuel consumption data (calculated by the CPU based on the driven distance and the fuel consumption volume that are checked every 2 seconds after the engine was started) is displayed. The display is updated every 2 seconds and the data that forms the basis of the calculation is renewed every 2 seconds.
Average Fuel Consumption After Refueling	Average fuel consumption data after refueling (calculated by the CPU based on the cumulative driven distance and the cumulative fuel consumption volume after refueling [from engine start to engine stop]) is displayed. The display is updated every 10 seconds, and the data that forms the basis of the calculation is renewed every 10 seconds. Even after the engine is turned off, the fuel consumption data is stored in the memory as cumulative data until the data is clear.
Driven Distance After Refueling	The cumulative driven distance after refueling (from engine start to engine stop) is calculated by the CPU based on the vehicle speed pulse is displayed. The display on the screen is updated every mile or kilometer and the data is renewed every 0.1mile or 0.1km.
Running Time	The running time from the time that the engine is started to the time that it is stopped is calculated by the timer in the CPU and displayed. The calculation is performed in 1-minute increments and the display on the screen is updated every minute.
Average Speed	The average speed (calculated by the CPU based on the cumulative driven distance and the cumulative elapsed time from the time that the engine is started to the time that it is stopped) is calculated and displayed. The display on the screen is updated every 10 seconds and the data that forms the basis of the calculation is renewed every 10 seconds.

When the CPU detects a malfunction in a system, a message is indicated on the multi-information display. The messages displayed are provided in the table below:

Message	Buzzer	Description
LOW OIL PRESSURE	✓	This message is shown if the engine oil pressure becomes too low.
BRAKE WEAR	✓	This message shows that the brake pads are worn enough to require replacement.
MOONROOF OPEN	-	This message shows that the moon roof is open with the ignition switch in the OFF position and driver's side door open.
CHECK VSC	✓	This message appears if any of the conditions listed below exist. • The battery terminal has been disconnected to perform an initial adjustment of the VSC (Vehicle Skid Control) system. • The malfunction has occurred in the VSC system.
LEFT FRONT DOOR RIGHT FRONT DOOR LEFT REAR DOOR RIGHT REAR DOOR TRUNK OPEN	✓	These messages show that any door (or the trunk lid) is open with the ignition switch in the ON position. If the vehicle is driven with any door or the trunk lid open, the buzzer sounds along with the display of the message.
TAILLAMP FAILURE	✓	This message appears if any of the conditions listed below exist. • The light control switch is engaged in the tail or head position when one or more taillight or brake bulb is blown. • The brake pedal is pressed when one or more taillight or brake bulb is blown.
LOW ENG OIL LEVEL	✓	This message shows that the engine oil level is too low.
LOW WASHER FLUID	✓	This message shows that the washer fluid level in the tank is empty.
HEADLIGHT LEVELING	✓	This message shows that there is a problem somewhere in the automatic headlight leveling system.

Multi-Information Display Switch

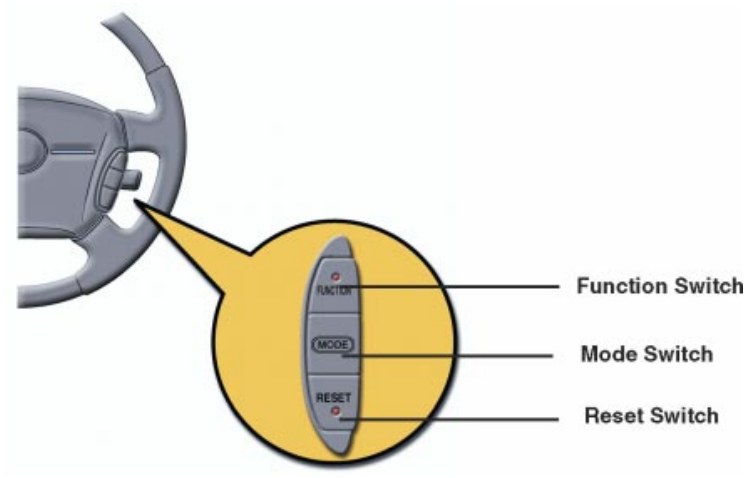

Fig. 4-80

Multi-Information Display Switch

The multi-information display switch changes the display. It consists of three switches: a function switch, a mode switch, and a reset switch.

The function switch is used to toggle between and display “cruise information” and “warning information” alternately.

NOTE

This switch only functions if there is a warning message to display.

The mode switch toggles between and displays information applicable to the various cruise information features shown in the table above.

NOTE

The reset switch resets the numerical value that is being displayed as cruise information. The resetting of a numerical value is only applicable to the item that is being displayed while operating the switch.

Other Combination Meters

The RX 300 three-eye type optitron combination meter with independently laid out speedometer, tachometer, water temperature gauge and fuel sender gauge with luminescent characters, scales and indicators is a standard feature. An electric speedometer detects the vehicle speed according to the signal from the ABS vehicle speed sensor.

Combination Meter

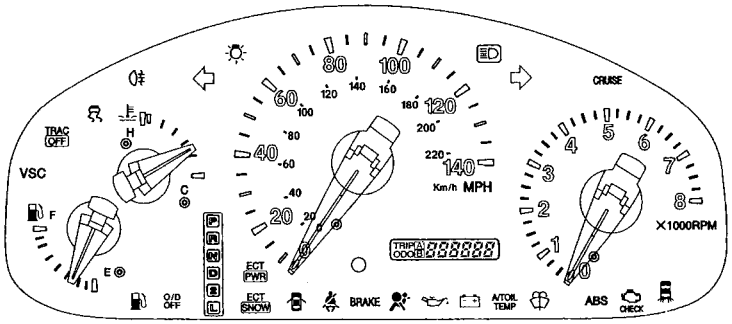

Fig. 4-81

Sensors provide data to the A/C meter ECU (located on the back of the combination meter). A meter panel IC provides an accurate display of the fuel gauge by minimizing the fluctuation of the fuel gauge needle due to vehicle body vibration.

A/C Meter ECU

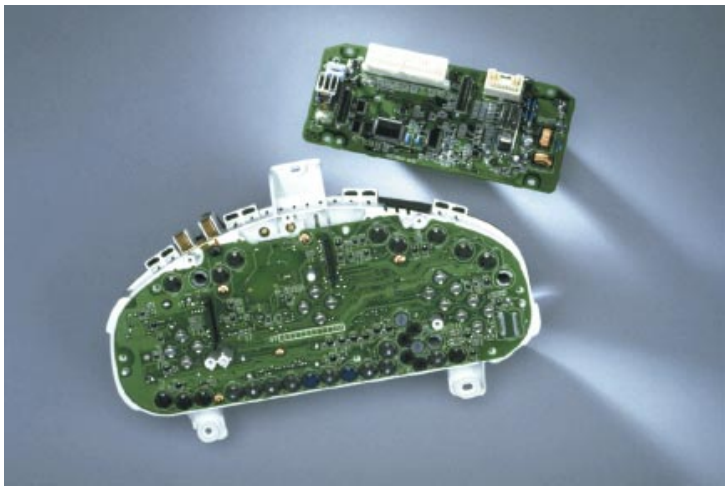

Fig. 4-82

The A/C Meter ECU determines the position of the fuel gauge needle by calculating the residual fuel data sent from the fuel sender to the meter and the fuel consumption data that is sent from the ECM to the meter.

On some Lexus vehicles, a level sensor is provided in the combination meter to detect the inclination of the vehicle. This sensor prevents the fuel gauge from an inaccurate display due to the fluctuation of the vehicle body position from a level surface while driving uphill, downhill, or during cornering. This is determined by calculating the residual fuel data that is sent from the fuel sender to the meter, and the fuel consumption data that is sent from the ECM to the meter.

A/C Meter ECU

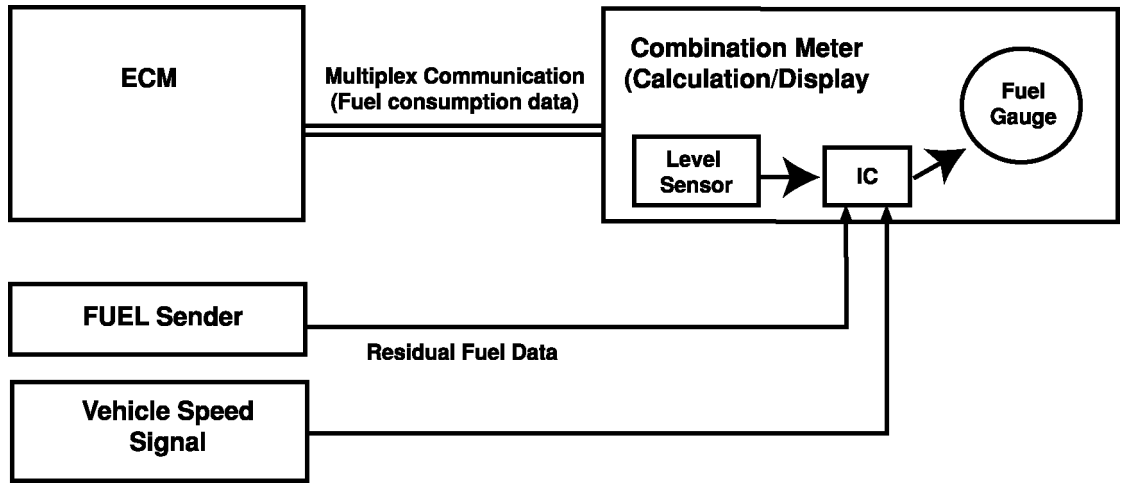

Fig. 4-83

Supplemental Restraint Systems (SRS)

The Dynamics of a Collision

When a vehicle collides with another vehicle or a stationary object, it stops quickly, but not immediately. For example if a vehicle hits a fixed barrier in a 30-mph frontal crash, it takes a little more than 1/10th of a second to come to a complete stop. At the moment of impact, the front bumper stops moving but the rest of the vehicle is still traveling at 30 mph. The vehicle begins absorbing energy and slows down as the front of the vehicle is progressively crushed.

In a frontal collision there is an average 4-6 feet between the bumper and the vehicle's occupant that is used to dissipate crash energy. These "crumple zones" are designed to crumple on impact, absorbing and dissipating collision energy to minimize its effect on the cabin. Crumple zones are created with dimples, or "crush beads," strategically placed and carefully sized to control the amount and the location of deformation. Through the use of "crumple zones," the likelihood of a serious injury to the occupant is reduced.

During the collision, the passenger compartment begins to decelerate but the occupants continue traveling forward at their original speed inside of the passenger compartment. The seat belt "links" the occupants to the vehicle structure, enabling gradual deceleration, thereby reducing the collision forces applied to the body.

NOTE

In a severe collision, the occupant may still contact the interior of the vehicle, however, the contact force will be much less than if the occupants were unrestrained.

The exact force needed to trigger the air bag is relative and determined by the angle of impact and factors such as the rigidity or deforming properties of the object hit. The deployment decision is controlled by a sophisticated computer and sensor system that monitors forward deceleration energy accumulated over a fraction of a second. Deployment is based on a calculation of deceleration energy or detection of deceleration and is not a function of vehicle's deformation.

SRS - Components and General System Operation

The Supplemental Restraint System (SRS) is composed of several safety devices. Listed below are a few:

- Seat Belts
- Air Bags
- Pretensioners
- Force Limiters
- Computers
- Sensors

Seat belts are the primary safety device of the Supplemental Restraint System. Seat belts are used to protect the occupant in accidents where the air bag does not deploy. They are also used to place the occupant in the proper position relative to the air bag when it does deploy.

Front Airbag

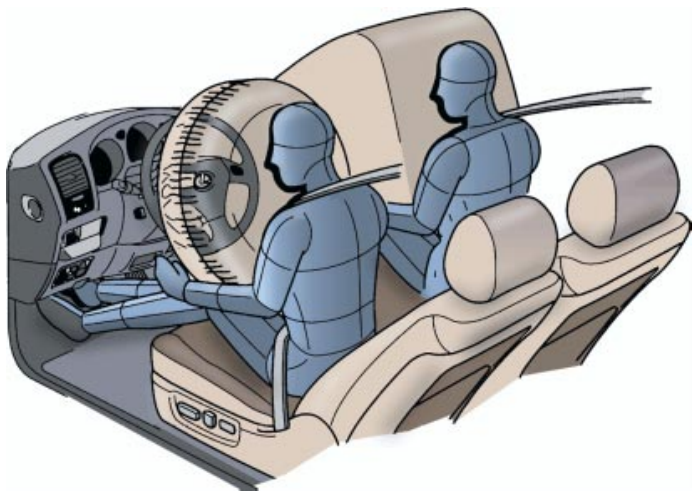

Fig. 4-84

Air bags are used to supplement the Supplemental Restraint System and are required in conjunction with the seat belt to protect the occupant in a severe frontal collision. The airbag is designed to lessen the shock to the driver and front passenger.

The gas used to inflate the airbag is not hazardous. One of the main ingredients of the gas is nitrogen, which makes up 80% of the air that we breathe.

The “smoke-like” residue in the air present after deployment of the airbag is composed mostly of talcum power, used as a lubricant to assist in the deployment. A small amount of sodium hydroxide is also present (this substance should be washed off as soon as is possible to prevent minor skin irritation).

Force Limiters and Pretensioners

Immediately after a collision, the SRS is designed to further protect the driver and front passenger through the use of force limiters and pretensioners.

At the initial stage of a collision the pre-tensioner retracts the belt to provide a passenger restraining effect. Pretensioners cinch the belt in the event of a collision. The retractor draws the seat belt in, so that the belt snugly restrains the occupant.

E-Type Seat Belt Pretensioner

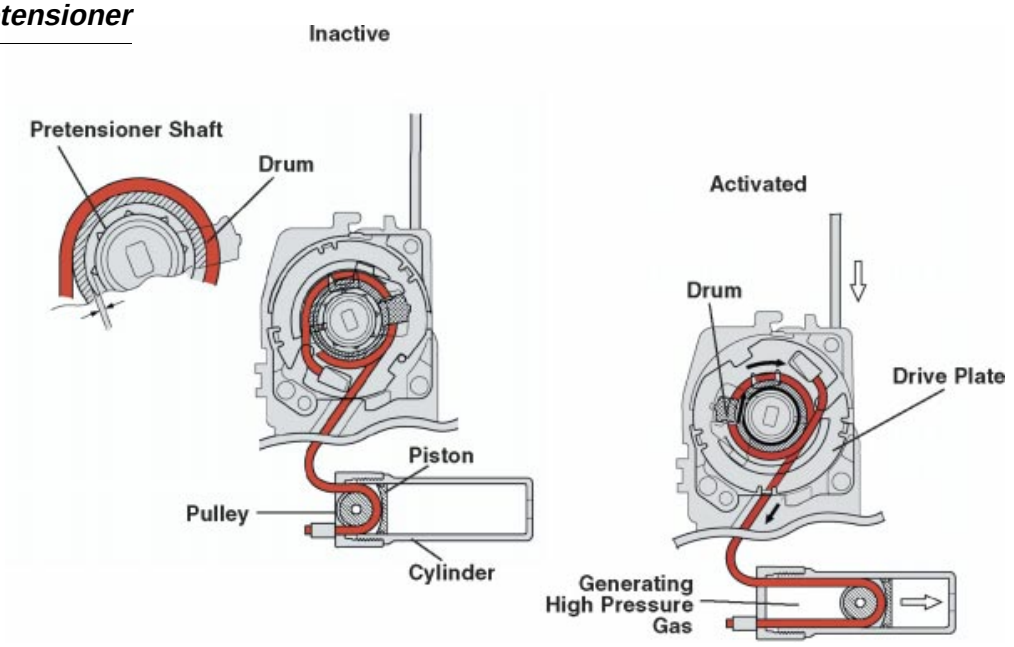

Fig. 4-85

E-Type Pretensioner

The E-Type Seat Belt Pretensioner (used on the RX 300) consists of the pretensioner mechanism and a retracting mechanism. When deceleration is detected due to a frontal collision, electric current ignites the gas generator located in the pretensioner. The gas generator emits a burst of gas, which pushes a piston. The piston pulls a cable causing the pretensioner drum to grab onto the shaft and retract the seat belt.

RX 300
Force Limiter

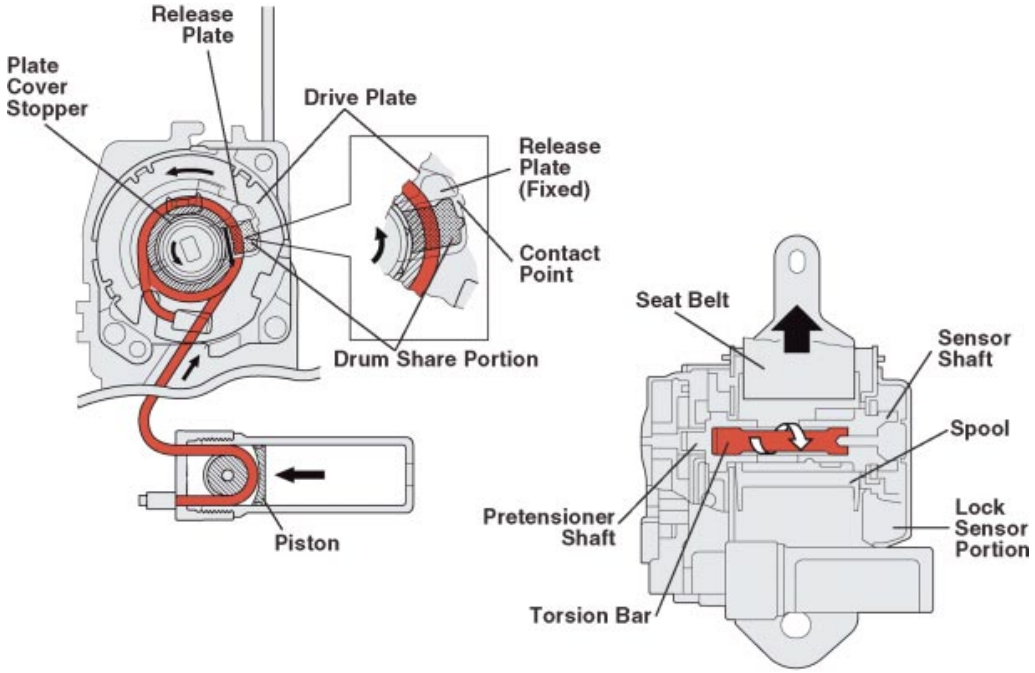

Fig. 4-86

RX 300 - Force Limiter

When the load on the seat belt reaches a certain value, the force limiter helps to keep the load at that constant value. Force limiters help reduce the force that is applied to the occupant's chest area by controlling the belt load to the passenger, thus mitigating impact on the passenger's upper torso.

The Emergency Locking Retractor (ELR) mechanism is activated to lock the sensor shaft in the lock sensor portion if the seat belt release acceleration exceeds a predetermined value. The spool, pretensioner shaft, and torsion bar are meshed with the sensor shaft to resist the seat belt release.

Seat Belt Force LImiter

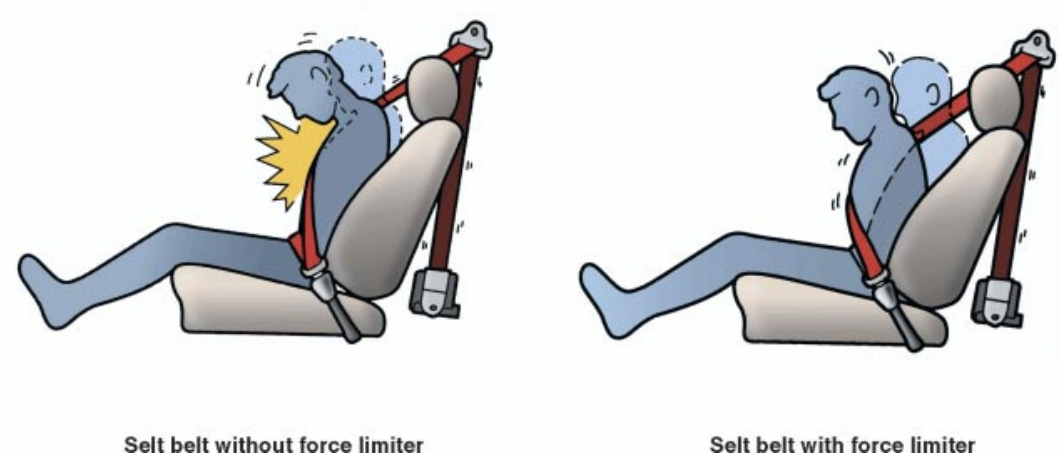

Fig. 4-87

GS Series - Force Limiter

When the force limiter is activated, the torsion bar twists, allowing the pretensioner to return to its initial position. When the release plate contacts the plate stopper, the drum stops rotating. However, the force limiter continues to operate due to the deformation of the drum share portion.

LS 400 Seat Belt Force Limiter

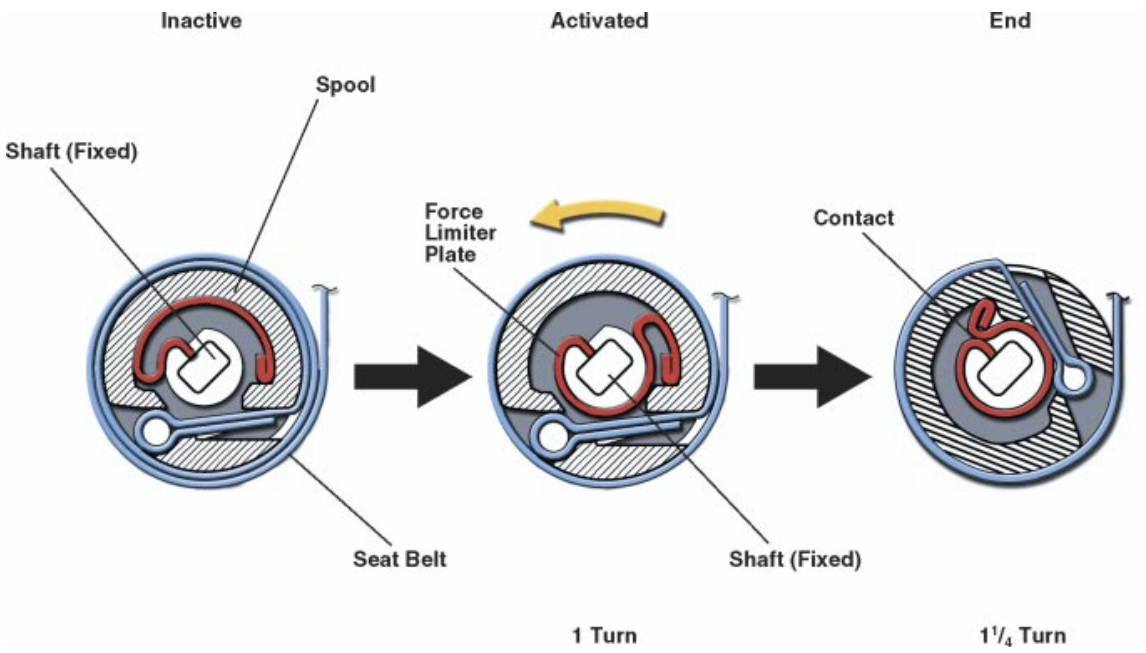

Fig. 4-88

LS 400 Force Limiter

Shown is the Seat Belt Force Limiter used in the LS 400. This style consists of the force limiter plate, spool, shaft, and seat belt. If the force of occupant movement is determined to apply more than the prescribed load to the seat belt, the force limiter plate begins to deform. As a result, the spool rotates along with the movement of the belt, pulling the belt out. Additionally, the plate deforms by surrounding the shaft along with the rotation of the spool and acts to resist the pulling movement.

Occupant Detection Sensor

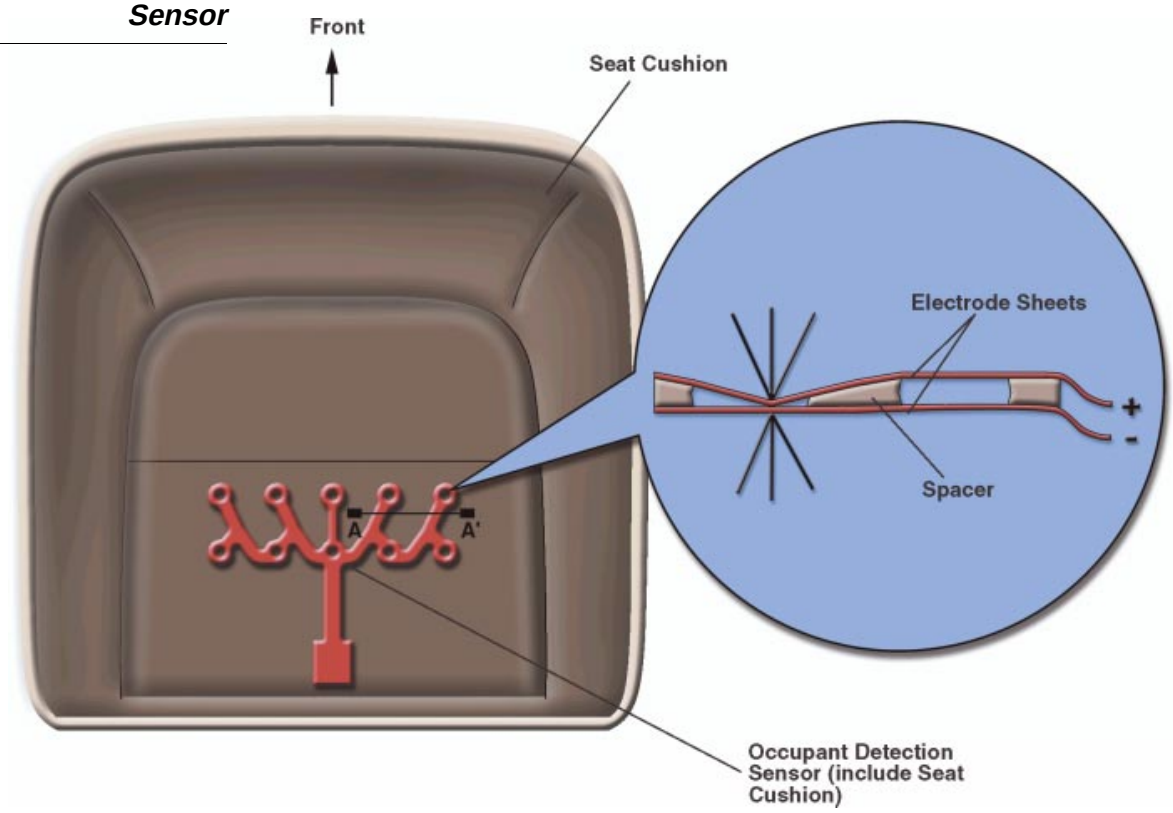

Fig. 4-89

Occupant Detection Sensor

An occupant detection sensor (enclosed in the seat cushion of the front passenger seat) detects if the seat is occupied. A front passenger seat belt warning light flashes to inform the front passenger that the seat is occupied but the seat belt is not engaged.

The sensor consists of two sheets of electrodes with a spacer sandwiched in between. A hole is provided in a portion of the spacer enabling the electrode sheets to come in contact with one another through the hole when the weight of the occupant is placed on the seat.

Airbag Front Component Layout

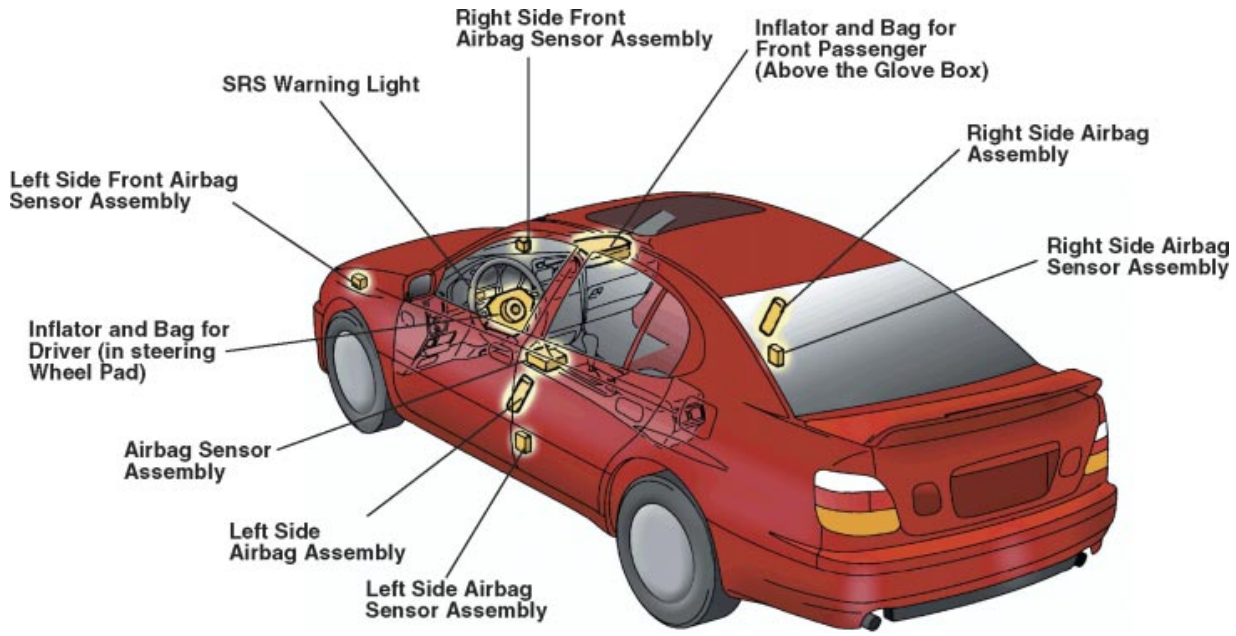

Fig. 4-90

Front Airbags

Front air bags are installed in the steering wheel and passenger dashboard and are designed to inflate in a severe frontal impact. They are not designed to provide protection in rear impacts, rollovers, or multiple impacts.

As indicated, the airbag sensor assembly determines a frontal impact taking into consideration a number of factors:

- Is the impact within a determined area
- Does the impact produce a shock greater than a predetermined prescribed level
- Is the deceleration detected in excess of a predetermined amount

The airbag sensor assembly consists of an airbag sensor, safing sensor, ignition control circuit, and a diagnostic circuit.

The ignition control circuit performs a prescribed calculation based on the signal output by the airbag sensor and the front airbag sensor. If these calculated values are larger than a predetermined value, it activates the ignition operation.

Front Airbag Wiring Diagram

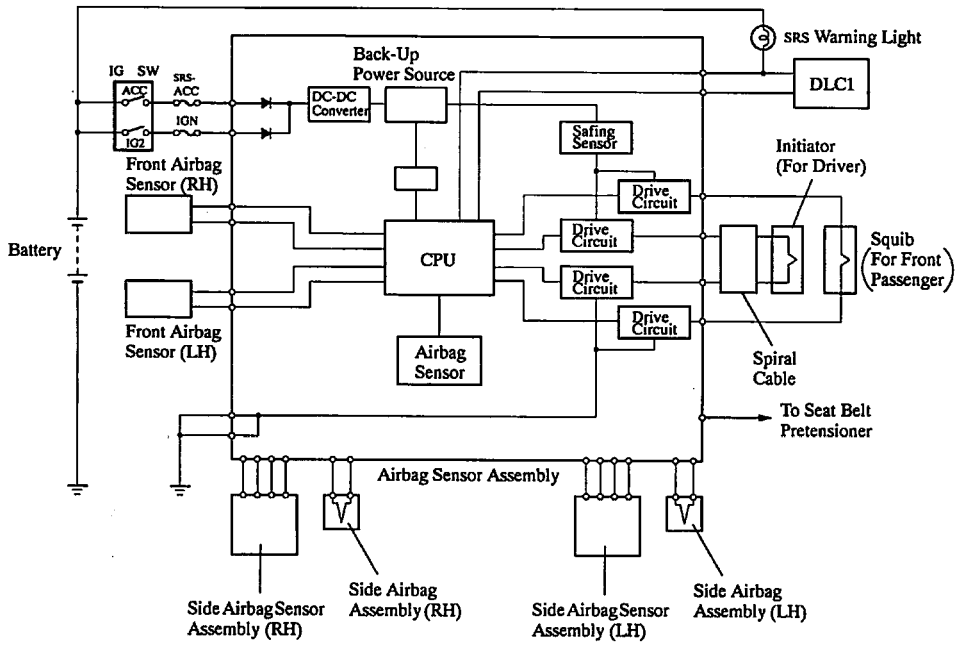

Fig. 4-91

The back-up power source consists of a power supply capacitor and a DCDC converter. In case of a power system failure during a collision, the power supply capacitor discharges and supplies electric power to the system. The DC-DC converter is a boosting transformer when the battery voltage drops below a certain level.

The diagnostic circuit constantly checks the system for a malfunction. When a malfunction is detected, it lights up the SRS warning light on the combination meter to alert the driver and the malfunction is coded and stored in the memory circuit as a DTC.

Front Airbag

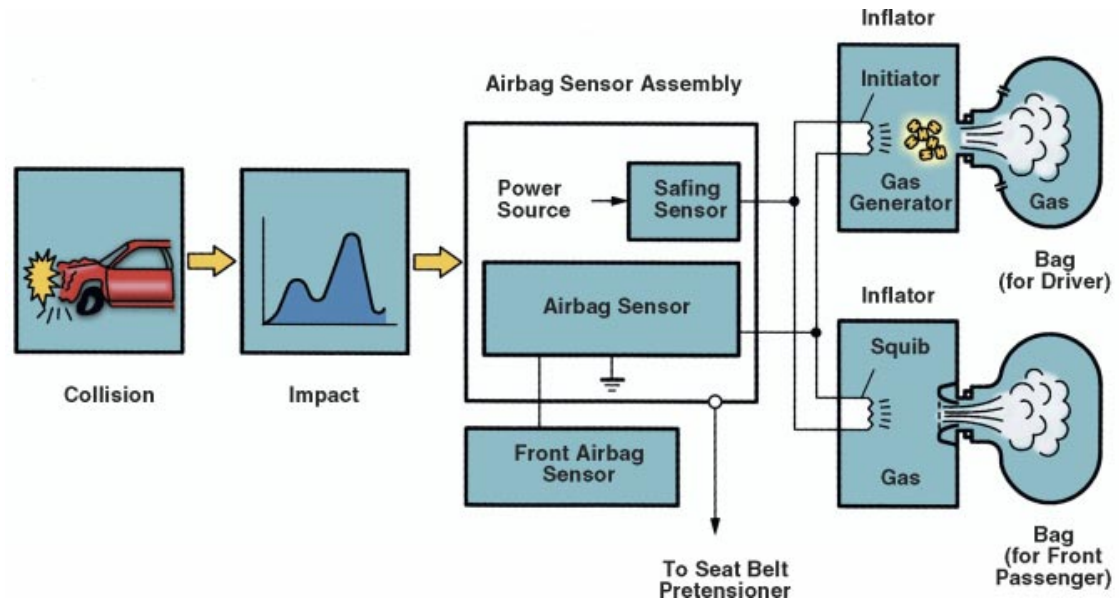

Fig. 4-92

The safing sensor is enclosed in the airbag sensor assembly. It turns ON and outputs an ON signal to the airbag sensor assembly if a deceleration force higher than the predetermined value is applied to the safing sensor as a result of a frontal collision.

To activate an airbag, a safing sensor and one or more of the impact sensors must signal that deployment is necessary. Multiple sensors help to prevent accidental deployment.

The front airbag sensor (shown for the GS series) is also enclosed in the airbag sensor assembly. It consists of a rotor, movable contact point and a stationary contact point.

Front Airbag Sensor

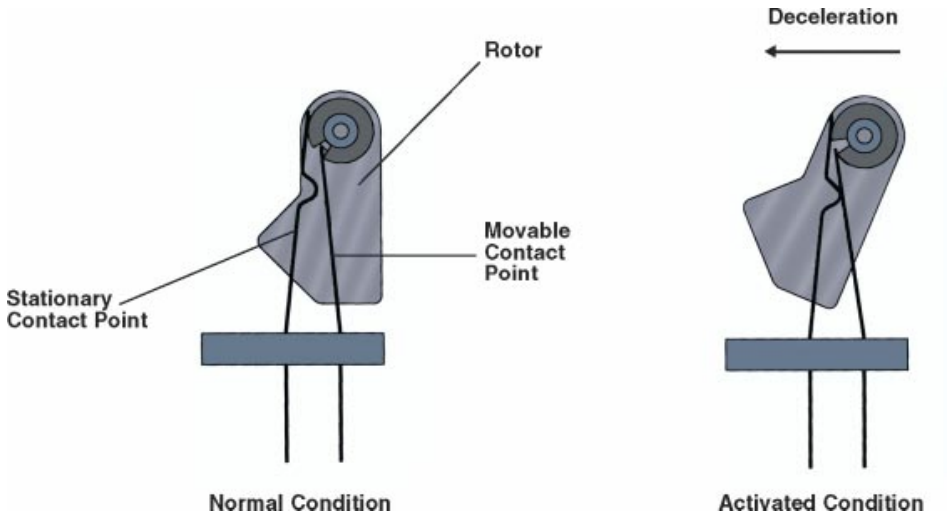

Fig. 4-93

The rotor is fixed in position by the initial set load of the movable contact point. Based upon the deceleration of the vehicle that occurs during a collision, the distortion that is created in the sensor is converted into an electric signal. This signal is a linear representation of the deceleration rate.

If a sudden deceleration that exceeds the predetermined value occurs due to a collision, the rotor of the airbag sensor will rotate. The rotational movement of the rotor pushes the movable contact point and causes the movable and stationary contact points to come into contact with one another. As a result, an ON signal is generated and transmitted to the airbag sensor assembly.

Based upon these factors a deployment decision is made and the airbag and seat belt pretensioners are activated automatically.

Drivers inflator

The drivers side Inflators in the SC and GS Series are comprised of an initiator, an enhancer, propellant grain (gas generator), and a filter.

SC 400/300 Driver's side Airbag Inflators

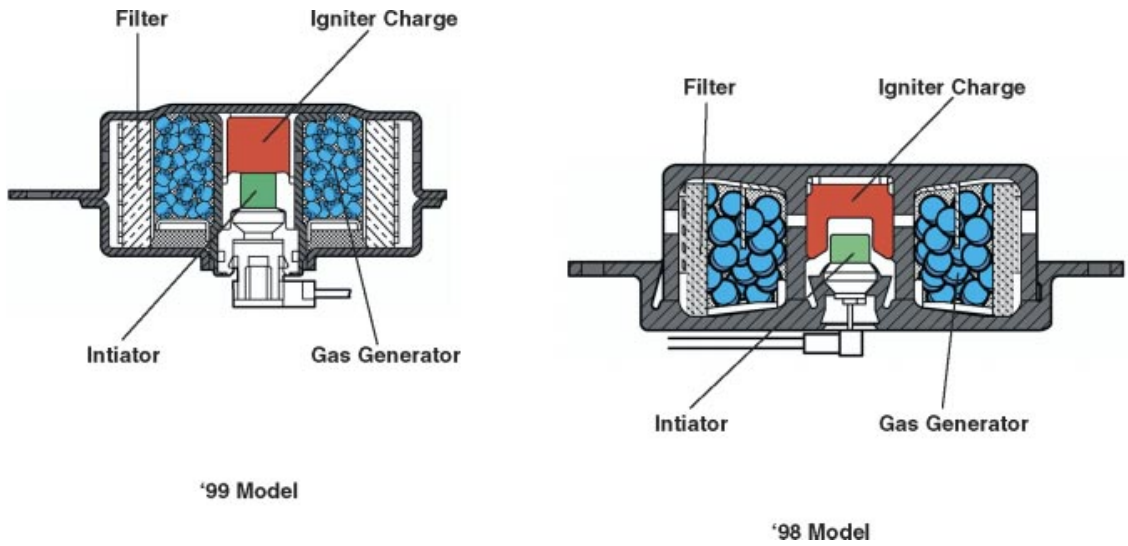

Fig. 4-94

If the airbag sensor is activated by deceleration due to a frontal collision, electric current will ignite the initiator located in the inflator. The flame spreads instantaneously to the propellant grain, and a large amount of nitrogen gas is generated from the propellant grain. This gas flows through the filter where cinders are removed and the gas is cooled before filling the bag.

Front Passenger Inflator

The airbag inflator for the front passenger's side is comprised of a squib, projectile, primer, burst disk, ignition booster, an actuator, propellant, and high-pressure argon gas.

Passenger side Airbag Inflators

▶ Operation ◀

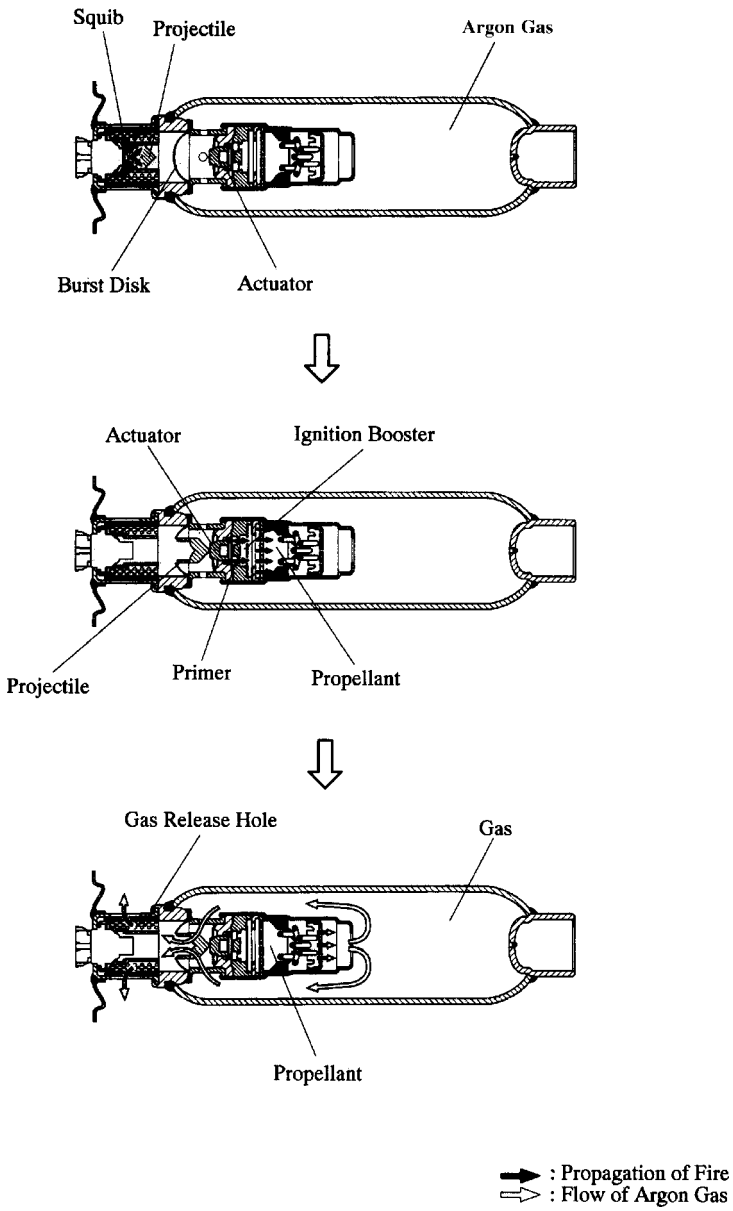

Fig. 4-95

If the airbag sensor is turned on by deceleration due to a frontal collision, electric current ignites the squib located in the inflator. Ignition of the squib fires a projectile, which pierces through the burst disk and collides with the actuator. The actuator ignites the primer, emitting a flame that spreads instantaneously to the ignition booster and then to the propellant. A chemical reaction inside the inflator assembly begins filling the airbag with gas. The gas (expanded as a result of the ignition of the propellant) flows into the airbag through the gas release hole and inflates the airbag.

NOTE

Only a small amount of current flow will deploy the airbags. Never check the resistance of a squib using an ohmmeter.

Side Airbag

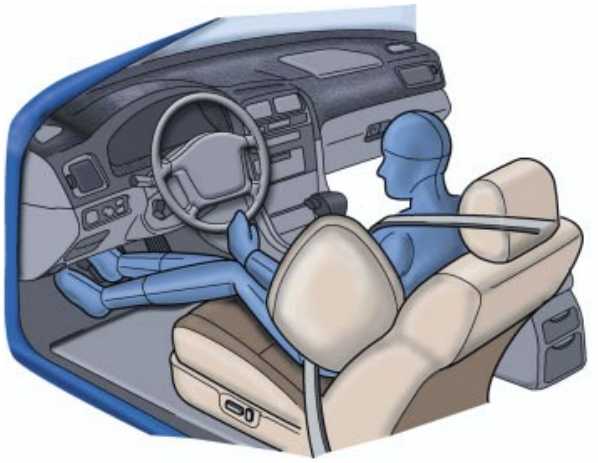

Fig. 4-96

Side Airbags

The side airbag works in conjunction with energy absorbing doors. They are designed to help reduce the impact energy that is transmitted to the driver and front passenger in the event of a side collision.

Layout of SRS Components

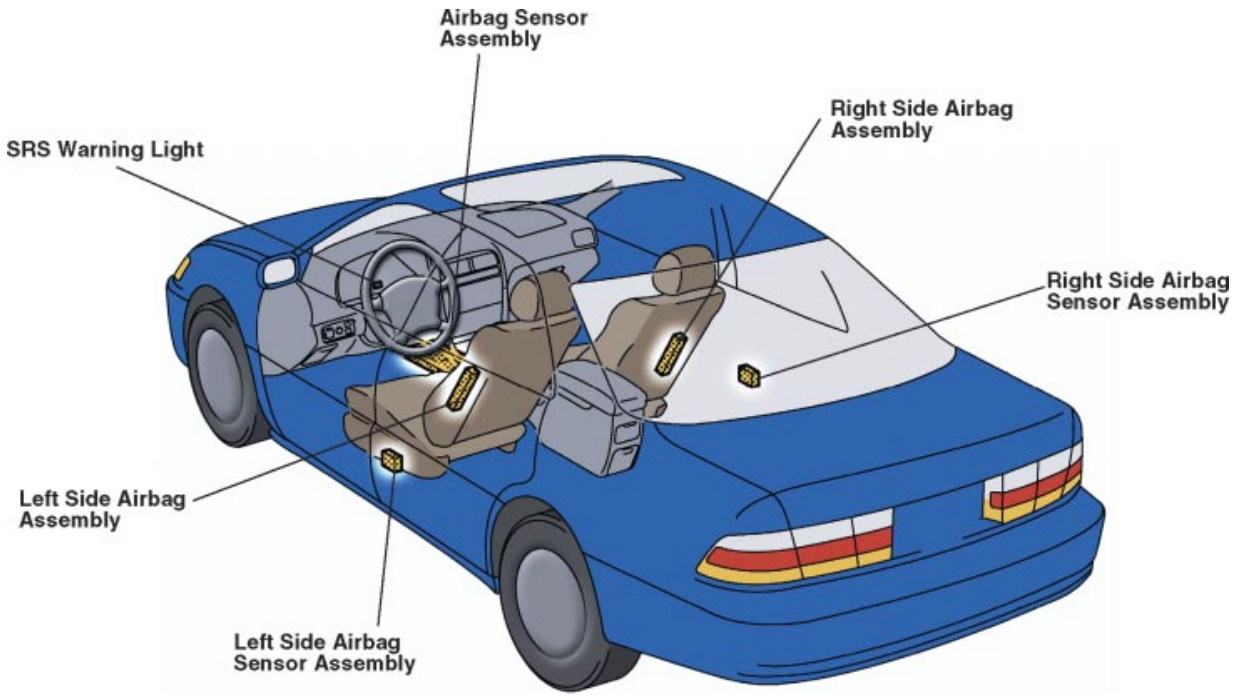

Fig. 4-97

Side airbags are mounted in the outboard side bolsters of the two front seatbacks. This ensures that the air bag remains in the same position relative to the occupant's seat position no matter if the seat is in a forward position or moved backward.

In a side collision, the side airbag sensor detects the side-to-side shock. If its value is greater than specifications, the airbag deploys and reduces the impact to the driver's (or front passenger's) arm and chest against the door trim.

NOTE

Because the side impact air bag is mounted in the seat, it is imperative to ensure that the seat is not covered with anything that would that would interfere with the deployment such as a seat cover, back pad, or T-shirt.

Side Airbag Activation Process

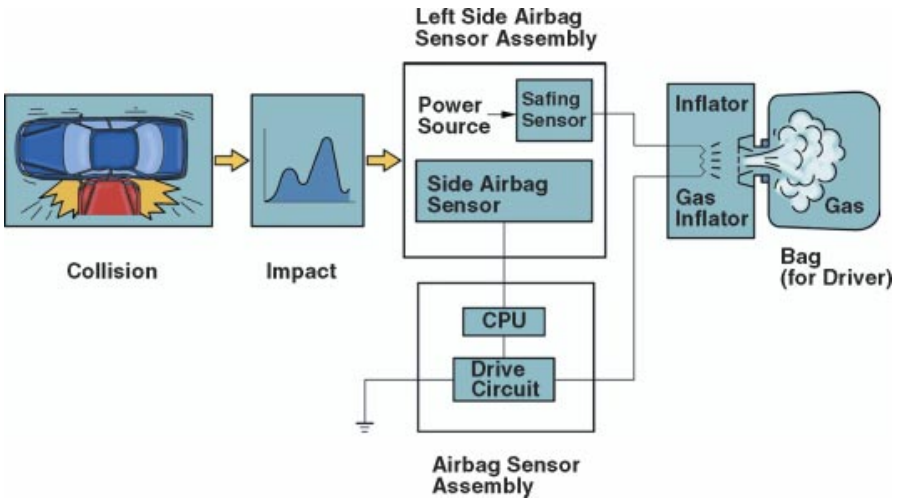

Fig. 4-98

In the ES 300 side airbag system (shown), the airbag sensor assembly is mounted on the center floor under the instrument panel and the side airbag sensor assembly is mounted on the right and left center pillars. Similar to the front airbag sensor assembly, the side air bag sensor assembly, consists of an ignition control circuit, back-up power source, a diagnostic circuit, and a memory circuit.

Side Airbag - Wiring Diagram

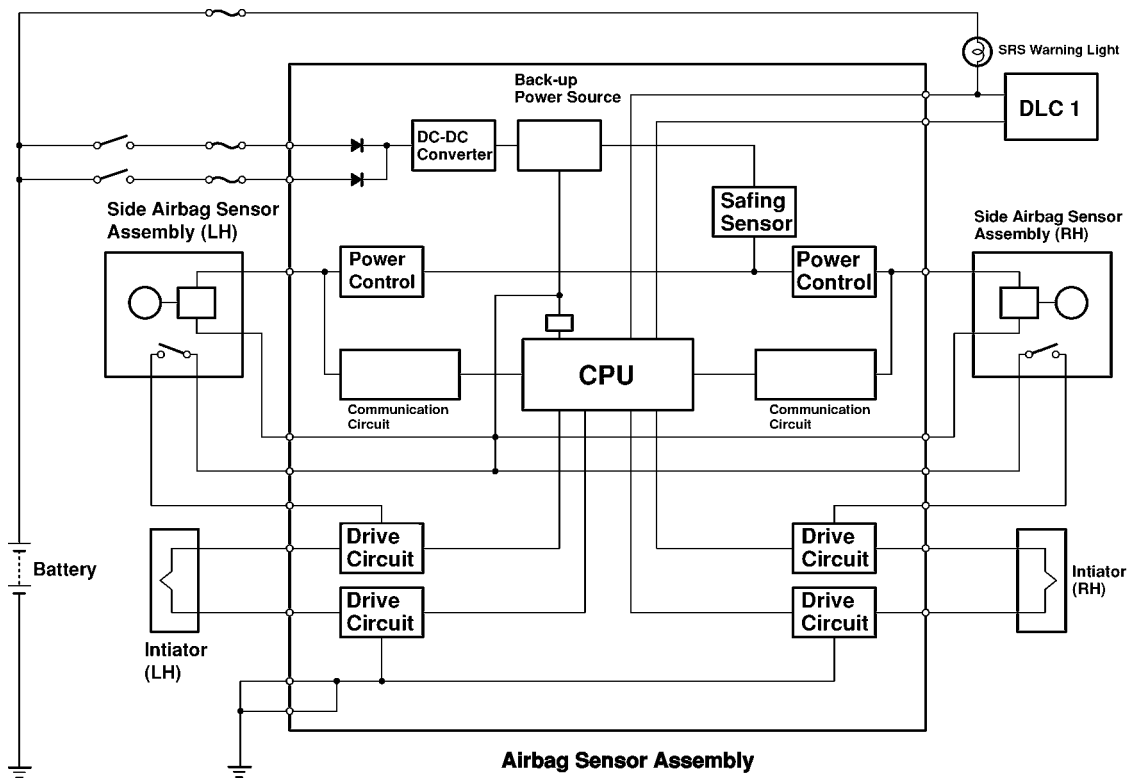

Fig. 4-99

The side airbag sensor (enclosed in the assembly) senses the distortion created in the sensor as a result of a side collision and converts it into an electrical signal. Like in the front airbag sensor, the signal is a linear representation of the deceleration rate. When the airbag sensor assembly receives the airbag activation signal from the side airbag sensor assembly it applies current to the inflator.

The safing sensor is also enclosed in the side airbag sensor assembly and turns ON if the acceleration force is higher than a predetermined value in a side collision. It is designed to be activated by a smaller acceleration rate than that of the side airbag sensor.

ES 300 Side Airbag Inflator

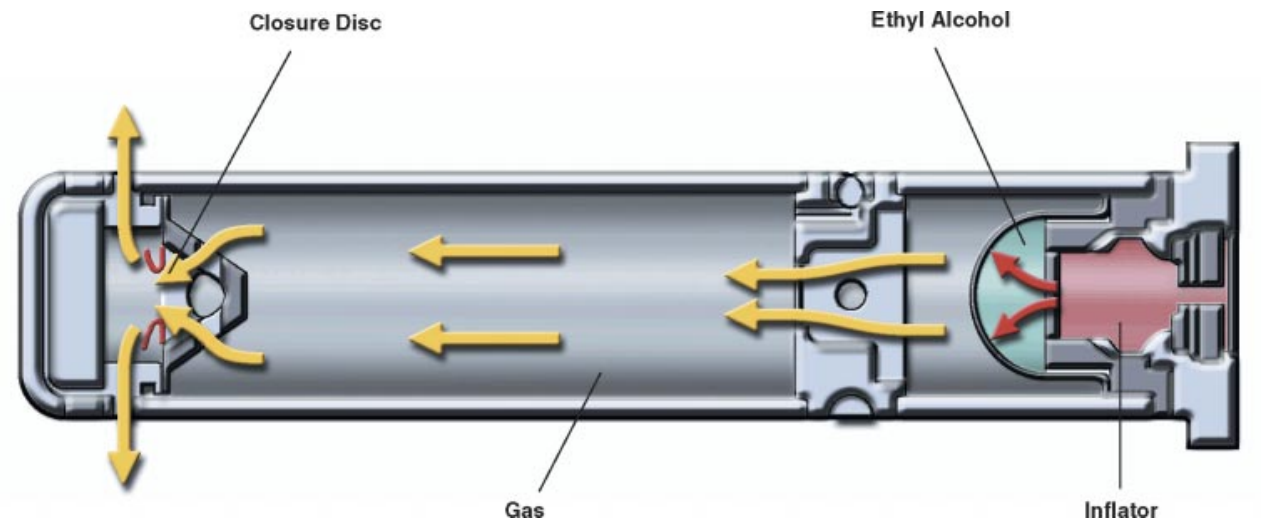

Fig. 4-100

If the side airbag sensor is turned ON due to a side collision, electric current ignites the initiator located in the inflator. The flame of the initiator spreads instantaneously to the ethyl alcohol in the closure disc. The gas pressure increase caused by the combustion of the ethyl alcohol expands through the closure disc and flows into the bag. The airbag tears open the seat outer cover to expand further and help to minimize impact to the arm and chest of the driver and/or front passenger.

Side air bags do not necessarily deploy simultaneously. They function independent of one another, deploying only on the side of impact.

The inflation rate of side impact air bags is different than that of front air bags. Side impact air bags deploy faster than front air bags and use a smaller charge to deploy.

ELR Reclining Detection Mechanism

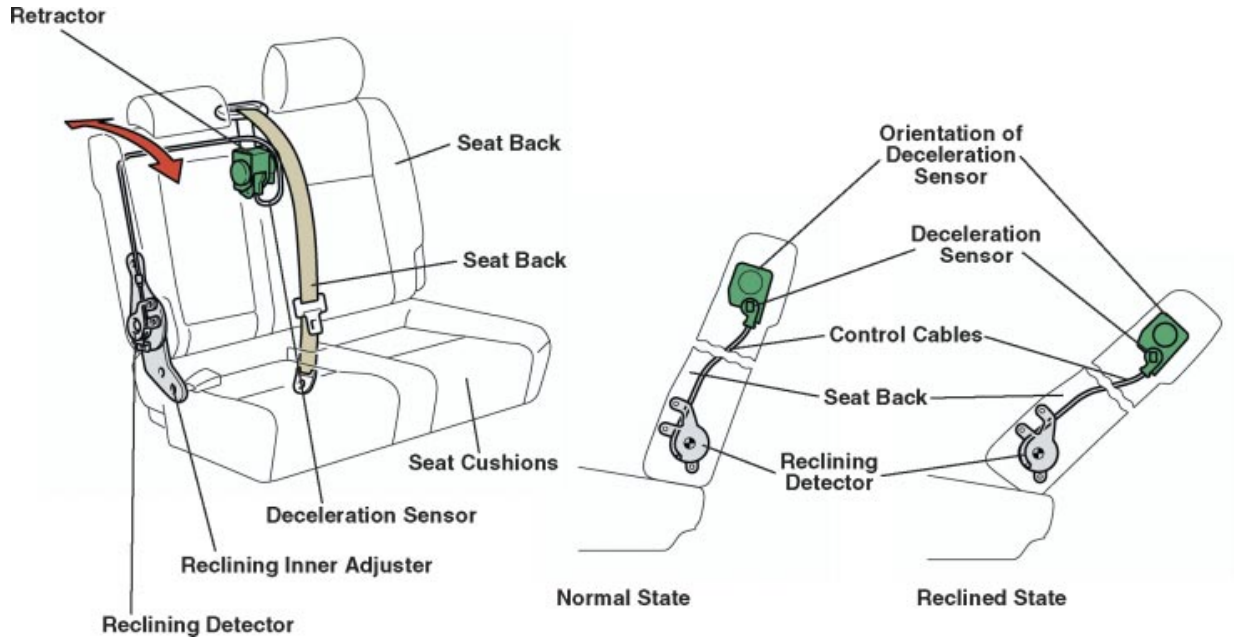

Fig. 4-101

LX 470 SRS Components

Emergency Locking Retractor (ELR) activates at a prescribed rate of deceleration to lock the retractor and hold the occupant in the proper position. During normal driving the ELR provide slack for occupant comfort and mobility.

Automatic Locking Retractor (ALR) activates when the seat belt is fully extended. The purpose of ALR is to secure child restraint seats or packages in a locked position to avoid the movement allowed by ELR retractors. When ALR is activated, the seat belt will not allow the slack provided in ELR operation, and in fact will continue to ratchet tighter until it is fully retracted. Thus if an occupant is belted with ALR operation activated, the belt will progressively tighten on the occupant and will not release.

The LX 470 has an ELR reclining detector (installed on the reclining inner adjuster) which detects the difference in the angles of the seat back and the seat cushion. The reclining detection mechanism consists of a retractor, a deceleration sensor for activation, a reclining detector, and a control cable that connects the deceleration sensor with the reclining detector.

When the seat back is reclined, the retractor moves along with the seat back movement. The point where the control cable attaches to the reclining detector also rotates with the seat movement, as does the deceleration sensor connected to the control cable. The orientation of the sensor does

not change regardless of the reclining angle and the ELR activates at a prescribed rate of deceleration regardless of the reclining angle of the seat back.

Pretensioner Construction

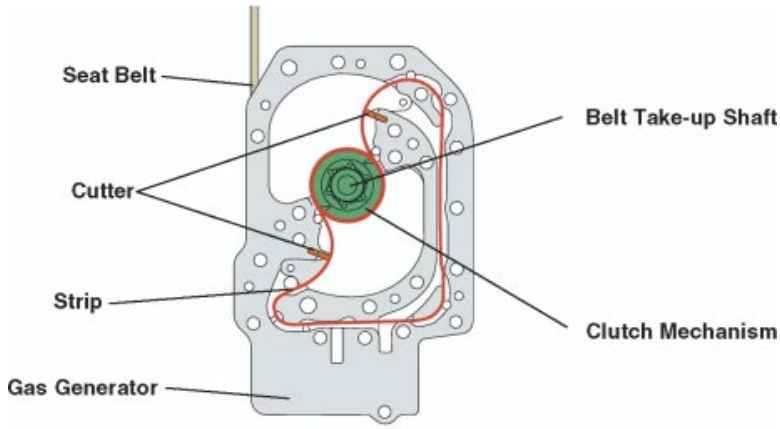

Fig. 4-102

LX 470 Pretensioner

The seat belt pretensioner consists of the pretensioner mechanism, a retracting mechanism, and a locking mechanism.

Clutch Mechanism

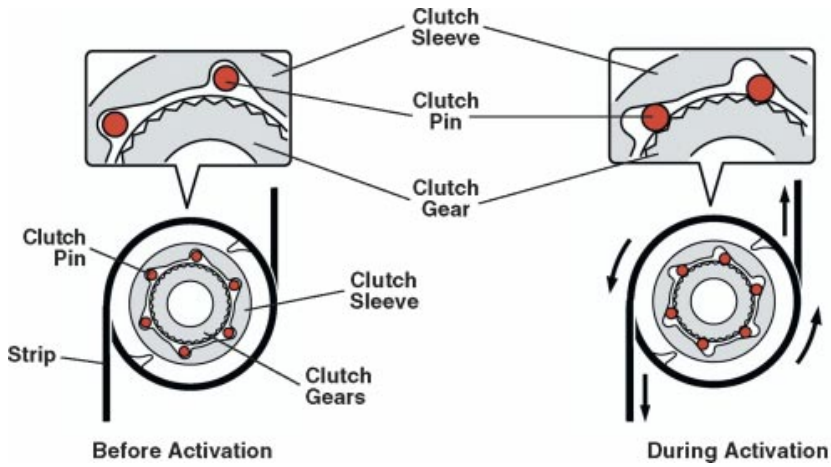

Fig. 4-103

Pretensioner Clutch Mechanism

The pretensioner clutch mechanism is composed of a clutch sleeve, clutch pin, and a clutch gear. The clutch gear is integrated with the torsion bar and spool. The clutch sleeve has a strip wrapped around it.

Normally, the clutch pin is engaged with the pin holder and chamber so that the rotation of the clutch gear is not obstructed. When deployed, the strap causes the clutch sleeve to rotate. The clutch sleeve causes the clutch pin to shear off from the pin holder, allowing the clutch sleeve and clutch gear to engage. As a result, the clutch sleeve, torsion bar, and spool rotate together.

Pretensioner Operation

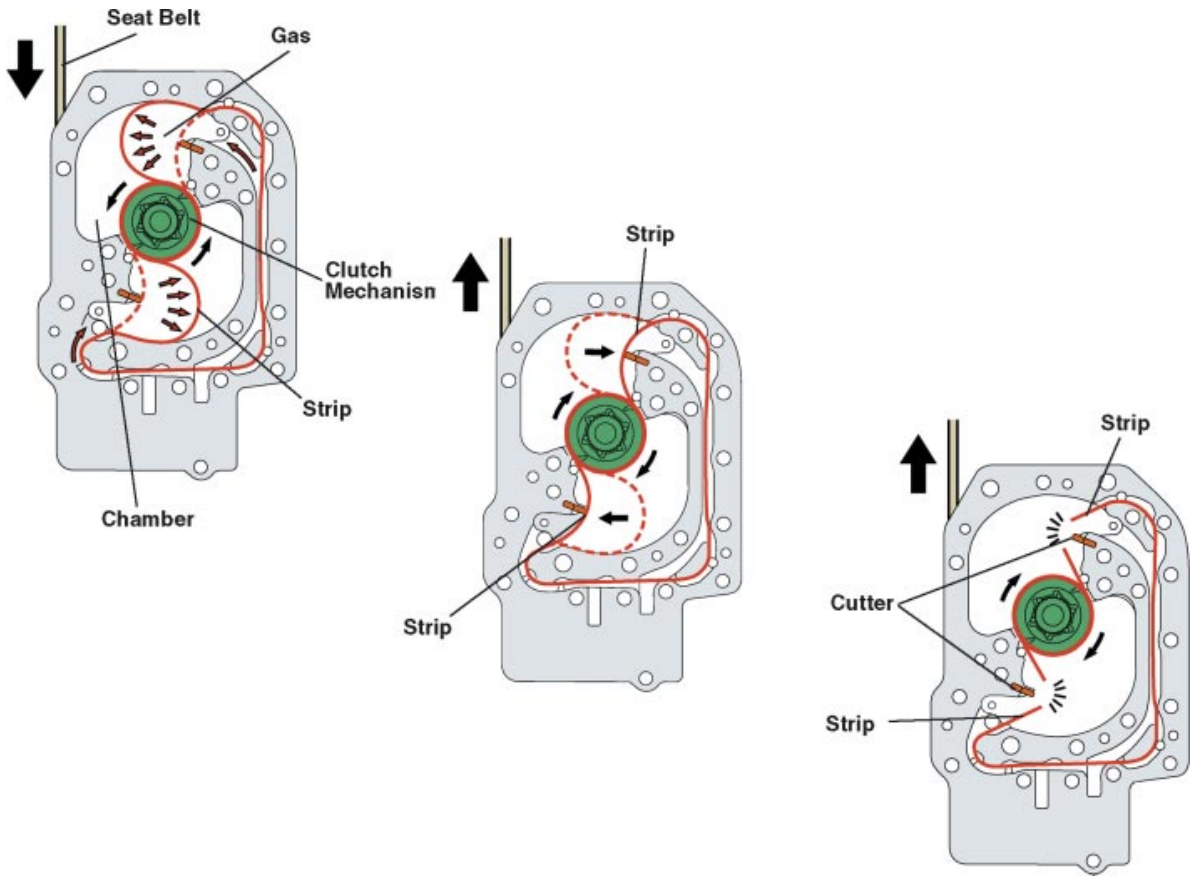

Fig. 4-104

Pretensioner Operation

Based upon the igniter signal received from the airbag computer, a large volume of high-pressure gas is generated in the chamber. As a result, the strip (that is wrapped around the clutch sleeve) expands, causing the clutch sleeve to rotate. The clutch mechanism (clutch sleeve, torsion bar, and spool) rotates and takes up the seat belt.

When the activation of the seat belt pretensioner is complete and the seat belt is pulled out due to the occupant's forward movement, the locking (ELR) mechanism activates to lock the movement of the belt. If the force limiter activates, the rotation of the seat belt spool and shaft causes the pretensioner strap to be taken up by the clutch sleeve. Heavy seat occupant inertia pulls on the seat belt. The amount of force placed on the force limiter is correspondingly large. The strap is pulled tight and cut and the force limiter can now be activated to restrain the occupant with the proper amount of force.

Force Limiter Operation

The LX 470 seat belt force limiter is composed of a spool, torsion bar, locking base, and a stopper.

Seat Belt Force Limiter Operation

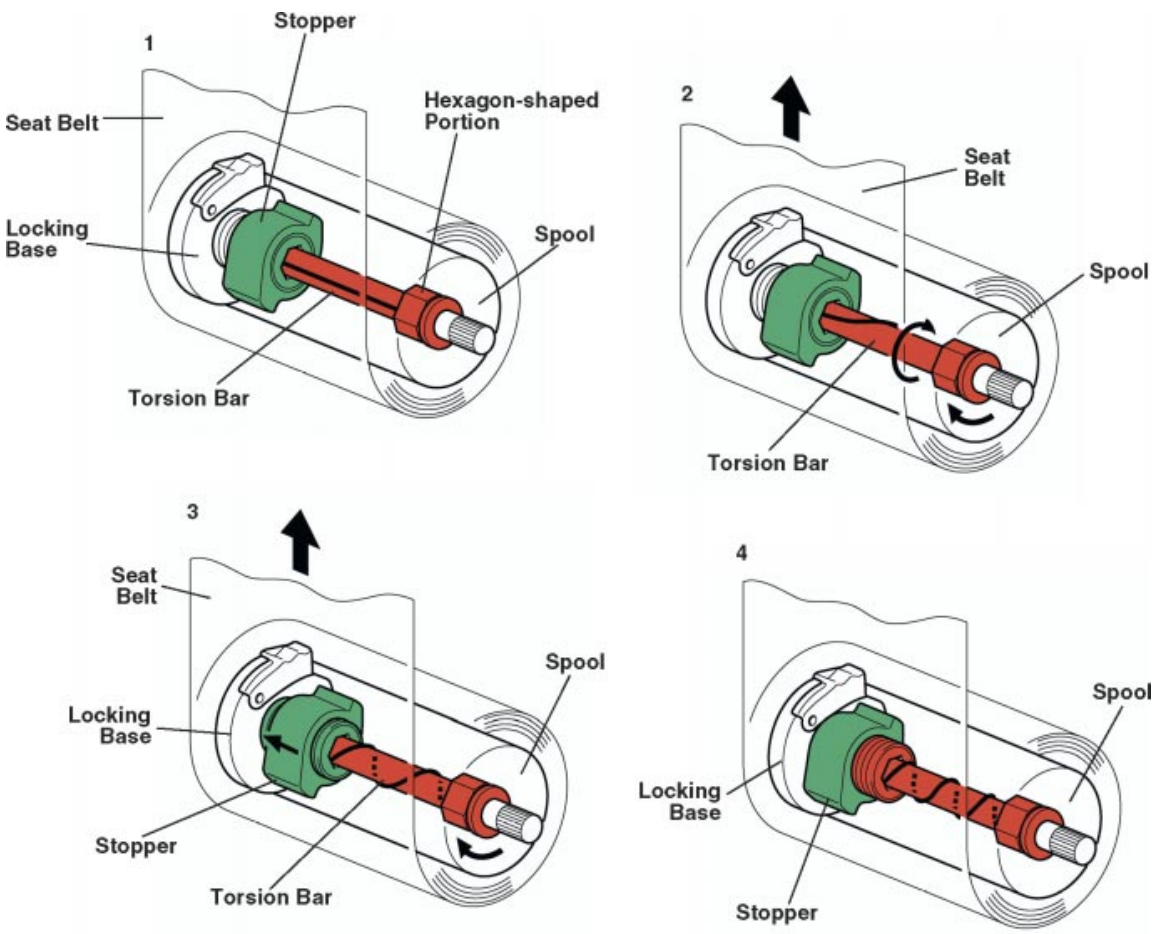

Fig. 4-105

One end of the torsion bar is secured to the locking base and the other end is integrated, via the clutch gear, with the hexagon-shaped portion of the spool. The stopper is coupled to the threaded portion of the locking base and rotates in unison with the rotation of the spool.

When the ELR mechanism is activated in a collision, if a force that exceeds the predetermined load is applied to the seat belt, the torsion bar becomes twisted, causing the spool to rotate and the belt to be released.

The torsion bar twisting force along with the rotation of the spool acts as a resistance against the pulling of the belt. When the stopper comes in contact with the top of the locking base, it cannot rotate any further which stops the rotation of the seat belt.

SRS Tips

1. When the airbag light on the instrument panel goes ON for approximately 6 seconds and then goes out, the system is ready and fully operational.
2. The air bag goes through a self-diagnostic check each time the vehicle is started. This is indicated when the SRS side impact air bag warning light (on the instrument panel) illuminates for approximately 6 seconds after the ignition key is turned ON.

   Problems are indicated if the SRS side impact air bag warning light fails to illuminate or remains illuminated continually.
3. Airbags should be checked after 10 years of vehicle operation and every 2 years thereafter.
4. Work must not be started on the SRS until 90 seconds after the ignition switch is turned to the “LOCK” position and the negative terminal cable is disconnected from the battery. The SRS is equipped with a back-up power source so that if work is started within 90 seconds from disconnecting the negative battery cable, the SRS may deploy.
5. All connectors in the SRS are yellow in color to distinguish them from other connectors.
6. Connectors having special functions specifically designed for the SRS use durable gold-plated terminals for high reliability.
7. Always deploy replaced airbags according to the procedure outlined in the Repair Manual.
8. Always use the specified SST (SRS Deployment Tool) and perform the deployment in a place away from electrical noise.

The HomeLink® Universal Transmitter/ Transceiver

The HomeLink® Universal Transmitter/Transceiver was introduced to Lexus vehicles in the fall of 1998. It was initially installed on the LS 400 and GS 300/400.

The HomeLink® Universal Transmitter/Transceiver system consists of a radio transceiver connected to the vehicle's electrical bus. In Lexus vehicles, it is integrated into the visor on the driver's side. It is powered by the vehicle's battery and charging system and is used to activate garage doors, security gates, and security lighting.

HomeLink® provides a convenient way to replace up to three hand-held transmitters with a single device. This feature can be programmed to the radio frequency codes of most current transmitters.

HomeLink® Universal Transmitter

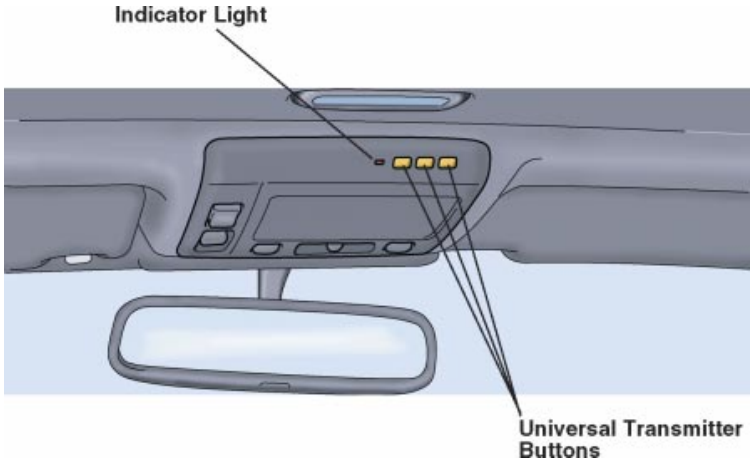

Fig. 4-106

Programming the Transmitter

The HomeLink® Universal Transmitter will program nearly any radio frequency transmitter that complies with current FCC regulations. This includes transmitters that operate between 286 and 399 MHz (exclusive of the restricted 322 to 335 MHz range).

Erasing Factory Default Codes

The HomeLink® Universal Transmitter comes programmed with factory default codes. These factory codes must be erased prior to programming the transmitter.

Prepare for programming the HomeLink® Universal Transmitter by erasing all three of the factory default channels.

- Depress and hold down the two outside buttons.
- Release buttons only when the indicator light begins to flash (approximately within 20 - 30 seconds).

Programming

1. Hold the end of the hand-held transmitter of the device you wish to program approximately 2 to 5 inches away from the surface of HomeLink® keeping the indicator light in view.
2. Decide which one of the three HomeLink® buttons you want to program. Using both hands, simultaneously depress the hand-held transmitter button of the device you wish to program to the HomeLink® system and the button you wish to program on the HomeLink® Universal Transmitter.

NOTE

Do not release the buttons until Step 3 has been completed.

3. Hold down both buttons until the indicator light on the HomeLink Universal Transmitter flashes, first slowly and then rapidly. When the indicator light flashes rapidly, both buttons may be released. (The rapid flashing light indicates successful programming of the new frequency signal).
4. Check for proper operation.
5. To program the remaining two channels (buttons) follow Steps 1 through 4.

If you want to write a new program over an already set program, select the button you want to program and repeat the procedure described in Steps 1 through 4 above. The previous program will be erased and a new program will be set.

Rolling Code Programming

If the transmitter has a “rolling code” feature, it is necessary to program the in-garage receiver, after programming the HomeLink visor in the vehicle.

Rolling Code systems (garage door openers which are “code protected”) may be determined by the following:

- The hand-held transmitter appears to program the HomeLink Universal Transmitter/Transceiver but does not activate the device.
- Depress and hold the programmed HomeLink® button. If the LED blinks rapidly for 2 seconds and turns solid, the device has a rolling code feature.
- The garage door opener was manufactured after 1995.

To program a garage door opener with the Rolling Code feature, follow the instructions outlined below:

1. Locate the training button on the "garage door opener motor head unit" (receiver). Exact location and color of the button may vary by manufacturer. If there is difficulty locating the training button, reference the garage door opener manual for the unit installed.

NOTE

HomeLink® has a Customer Service Hotline that can assist you to identify the location of the training button. Should you have difficulty, contact HomeLink® at 1-800-355-3515.

2. Depress the "training" button on the garage door opener motor head unit until the "training" light is activated (approximately 1-2 seconds) and release.

NOTE

Following Step 2, there are 30 seconds in which to initiate Step 3.

3. Depress and hold the programmed HomeLink® button until the indicator light turns from a rapid flash to a solid light (approximately 2 seconds). Release the HomeLink® button.
4. Depress and release the HomeLink® button again to complete the training process (Some garage door openers may require you to do this procedure a third time to complete the training process).
5. Check for proper operation. The garage door opener should now recognize the HomeLink® Transmitter/Transceiver. The remaining two channels may now be programmed if this has not previously been done.

NOTE

The HomeLink® Universal Transmitter/Transceiver (once programmed) or the original hand-held transmitter may be used to activate the garage door.

Erasing Channels

Individual buttons cannot be erased; however, to erase all three programmed buttons:

1. Depress and hold down the two outside buttons until the indicator light begins to flash after 20 seconds.
2. Release both buttons.

The HomeLink® Universal Transceiver is now in the train mode and can be programmed at any time following steps 1 through 4 in the "Programming" portion of this text.

Precautions!

In 1982, federal safety standards changed for garage door openers to ensure that they have automatic stop and reverse features.

Many openers manufactured before 1982 do not have safety features meeting current standards.

DO NOT use HomeLink® Universal Transmitter/Transceiver with any garage door opener that lacks the safety stop and reverse feature as required by federal safety standards. This includes any garage door opener model manufactured before April 1, 1982.

NOTE

RED TAG STATES* INCLUDE:

New York
California
Minnesota
Indiana

*Indicates that if a garage door opener service technician is called to a site and discovers a pre-1982 system, they must, by state law, disable the system and notify the owner of the need to upgrade that system.

Troubleshooting Tips for the HomeLink® System

HomeLink Programmed:

1. **Poor Range**
   If HomeLink has less range than the original transmitter:

- Reprogram HomeLink® using new, fresh batteries.
- Reprogram HomeLink® at a different length or angle than when originally programmed. Optimally, hand-held transmitter should be held between 2 and 5 inches away from the HomeLink® surface.
- Determine if there is interference (which is a source of poor range):
  - Does customer live near a TV or radio station or near power towers. Or do they have a metal garage door? If so, a Universal Receiver will enhance the range.

2. **Rolling Code Equipped Device** If the hand-held transmitter of the device has been programmed to HomeLink® but will not activate the device (i.e. garage door opener, entry door lock) the device may be rolling code equipped.

Press and hold the programmed HomeLink® button. If the LED blinks rapidly for 2 seconds and turns solid, the device has the rolling code feature. Refer to the Owner's Manual for rolling code programming.

HomeLink® will not program:

3. **Confirm Frequency** Confirm that the device is within the same HomeLink® frequency range (286-399 MHz).
4. **Hand-held Transmitter Placement** During programming, the hand-held transmitter should be between 2 and 5 inches from the HomeLink® surface.
5. **Initial Clearing Process**

Confirm the first programming step (clearing the default codes) is performed only 1 time.

6. **LED Activation** Confirm LED activates when any one of the HomeLink® buttons is pressed. If the LED does not activate, press the map lamp buttons. If map lamps do not light up, there may be a short in the wiring. If the map lamps light up, there is a problem with HomeLink®.

HomeLink® has a Customer Service Hotline that will assist you should your investigation indicate a problem with the HomeLink® hardware. Call 1-800-355-3515 for further assistance or analysis.

LED Indicators				
Training	Stored code	Solid light indicates a stored code.	If you continue to hold button and in 20 seconds unit will proceed to train mode (Indicated by slow blink).	Fast blink indicates successful train.
	Clear Channel		If a slow blink appears, channel is clear and in training mode.	Fast blink indicates successful train.
Clear Codes		Hold down outside buttons, solid light will appear.	Continue to hold buttons and in 20 seconds unit will proceed to train mode (Indicated by slow blink). Release buttons.	
Reloading Default Codes		Hold down outside buttons, solid light will appear.	Continue to hold buttons and in 20 seconds unit will proceed to train mode (Indicated by slow blink). Continue to hold buttons	Release buttons when light no longer appears

LED Indicators Meanings	
Constant Light	HomeLink® is in Transmit Mode (this can be either a learned signal or a default code.)
Slow Blink	HomeLink® is in Train Mode.
Fast Blink	HomeLink® has just been trained.
Fast Blink (1-2 seconds) then solid	Indicates HomeLink® is trained to a rolling code system.
No Light	One of two possibilities: No power to HomeLink® or HomeLink® has just reloaded the default codes.

Lexus Engines

Model Codes

All Lexus engines have model codes. Model codes are alphanumeric identifications (made up on numbers and letters) of a specific engine and may represent families of engines spanning several design generations and having different specifications and components.

The first digit of an engine code is always a number that indicates the design generation. As changes are made over the life of the engine family, the number changes to indicate the next generation. An example is the 1UZ-FE engine of the GS 400, SC 400, and LS 400 and the 2UZ-FE engine of LX 470. The next two letters of the engine code indicate the engine family. Additional letters following the engine generation and family represent specific engine specifications.

Lexus Engine Designations

1	UZ	FE
DESIGN GENERATION	ENGINE FAMILY	ENGINE SPECIFICATION
	UZ = LS 400, GS 400, SC 400, LX 470 JZ = GS 300, SC 300 VZ = ES 250, ES 300 MZ = ES 300, RX 300 FZ = LX 450	F = Cams turn in the opposite direction of each other. A “scissors cam drive mechanism” in which the timing belt (or chain) drives one cam; and a scissors gear drives the other exhaust cam. 4 valves per cylinder with a narrow angle. G = Cams turn in the same direction. Cams turn independently driven by the timing belt (or chain). 4 valves per cylinder with wide angle.

Fig. 4-107

Engine Layouts

Lexus uses two basic layouts for its engines, the “In-line” and the “V” configuration. The “In-line Six” design features six cylinders in a row (in-line). This design offers good torque and smooth operation.

The “V” configuration engines offer enhanced power in a compact design. The “V6” features six cylinders (two rows of three) in a “V” configuration. The “V8” features eight cylinders (two rows of four) in a “V” configuration.

Firing Order

The V-8 Engine cylinders are numbered with the odd numbered cylinders on the left bank and the even numbered cylinders on the right bank. The V-6 Engine cylinders are numbered with the even numbered cylinders on the left bank and the odd numbered cylinders on the right bank. The In-line 6 cylinder engines have cylinders numbered consecutively with number 1 cylinder at the front.

ENGINE CONFIGURATION	FIRING ORDER
V-8	1-8-4-3-6-5-7-2
V-6	1-2-3-4-5-6
In-line 6	1-5-3-6-2-4

2UZ-FE Engine

The LX 470 is equipped with the 2UZ-FE Engine. The 2UZ-FE Engine is a 4.7-liter V-8 configuration with four cams (DOHC), and 32 valves. The engine produces 230 horsepower at 4800 rpm and is capable of 320 ft. lbs. of torque at 3400 rpm. The engine is equipped with an Electronic Throttle Control System-intelligent (ETCS-i) for comfort and control.

2UZ-FE Engine

Fig. 4-108

The 2UZ-FE Engine has an aluminum cylinder head and a “pentrooftype” combustion chamber with the spark plug located in the center to improve the engine’s anti-knocking performance. The camshafts are made of cast iron alloy. The exhaust camshafts are driven by gears on the intake camshafts. A scissors gear mechanism is used on the exhaust camshaft for gear lash compensation (to control backlash) and reduce gear noise.

The 2UZ-FE Engine has a Direct Ignition System (DIS) to improve the ignition timing accuracy, reduce high-voltage loss, and enhance the reliability of the ignition system by eliminating a distributor. The DIS in the 2UZ-FE Engine is an independent ignition system that has one ignition coil for each cylinder. Iridium-tipped spark plugs are used to improve ignition.

The cylinder block is made of cast iron. The pistons are made of aluminum alloy and the piston head portion has adopted a taper-squish to improve fuel combustion efficiency. The crankshaft is made of steel with 5 journals and 8 counter-weights.

The oil pan is made in two pieces with an aluminum alloy portion (secured to the cylinder block and torque converter housing) and a second portion made of steel sheet.

2JZ-GE Engine

Pre 1998 with distributor

Fig. 4-109

2JZ-GE Engine

The GS 300 and SC 300 are equipped with the 2JZ-GE Engine. The 2JZ-GE Engine is a 3.0-liter in-line 6 configuration with 24-valves and dual overhead cams (DOHC). The engine produces up to 225 horsepower at 6000 rpm and is capable of 220 ft. lbs. of torque at 4000 rpm.

The 2JZ-GE Engine has an aluminum cylinder head and a “pentrooftype” combustion chamber to improve combustion efficiency, reduce detonation, and increase performance and economy.

The engine is equipped with an Electronic Throttle Control System-intelligent (ETCS-i) for throttle control and a Variable Valve Timing-intelligent (VVT-i) to improve engine performance, enhance fuel economy, and to reduce exhaust emissions.

The current 2JZ-GE Engine has a Direct Ignition System (DIS) to improve the ignition timing accuracy, reduce high-voltage loss, and enhance the reliability of the ignition system by eliminating a distributor. The DIS in the 2JZ-GE Engine is a 2-cylinder simultaneous ignition system that ignites 2 cylinders simultaneously with one ignition coil. Twin-ground electrode platinum tipped spark plugs are used.

1UZ-FE Engine

Fig. 4-110

1UZ-FE Engine

The GS 400, SC 400, and LS 400 are equipped with a 1UZ-FE Engine. The 1UZ-FE Engine is a 4.0-liter V-8 configuration with four valves per cylinder and four cams. The engine produces up to 300 horsepower at 6000 rpm and is capable of 310 ft. lbs. of torque at 4000 rpm

The 1UZ-FE Engine has an aluminum cylinder head, an aluminum cylinder block, and a taper-squish combustion chamber to provide anti-knock performance and improve intake efficiency. Iridium-tipped spark plugs are used to enhance wear resistance and improve ignition performance.

It has Variable Valve Timing (VVT-i) for effective engine performance, an Acoustic Control Induction System (ACIS) for increased power output in all ranges, and an Electronic Throttle Control System (ETCS-i) for effective engine control.

The Acoustic Control Induction System uses a bulkhead to divide the intake manifold into two stages. An intake control valve in the intake air chamber of the intake manifold, opens and closes to vary the effective length of the intake manifold based upon engine speed and throttle valve opening angle.

1MZ-FE Engine

Fig. 4-111

1MZ-FE Engine

The RX 300 and ES 300 are equipped with a 1MZ-FE Engine. The 1MZ-FE Engine is a 3.0-liter V-6 configuration with 24-valves and dual overhead cams (DOHC). The engine produces 220 horsepower at 5800 rpm and is capable of 222 ft. lbs. of torque at 4400 rpm.

The 1MZ-FE Engine has an aluminum head and block. Variable Valve Timing-intelligent (VVT-i) is employed to improve engine performance, enhance fuel economy, and reduce exhaust emissions.

A Direct Ignition System is available for more accurate ignition timing, lower voltages, and to avoid radio noise generation. Iridium-tipped spark plugs are used to improve ignition.

Acoustic Control Induction System (ACIS)

The Acoustic Control Induction System in this engine improves the torque in all ranges, especially in the low-speed range, by changing the intake manifold length in three stages.

Intake Inertial Effect

The air flow (in the intake manifold) pulsates due to opening and closing of the intake valve. When the intake valve is closed, the intake air near the valve is compressed by inertial force. This pressure is kicked back toward the intake chamber where it bounces back toward the intake valve again.

Controlling the length of the intake to allow this pressure to return to the intake valve at the end of the intake stroke will increase intake air volume. This is called “the intake inertia or ram effect.”

The ACIS uses two valves to control the intake manifold length in three stages. It matches the intake length to the pulsation cycle (that varies based upon engine speed and throttle valve opening) and thus, improves torque in all ranges.

Variable Valve Timing With Intelligence (VVT-i)

Varying intake valve open/close timing according to the operating conditions of a vehicle improves engine performance and fuel economy and provides for cleaner emissions.

Without variable valve timing, valve timing was a compromise between the need to produce maximum torque (horsepower) at low to medium speeds, maintain idle stability and fuel economy while still producing low emissions. Continuously adjusting when the valves open and close, called Variable Valve Timing (VVT-i) yields significant improvements in all these areas. The ECM advances or retards the intake camshaft, changing when the valves open and close according to driving conditions (such as engine speed and rate of acceleration).

The VVT-i system optimizes valve overlap throughout the engine's rpm range and under all operating conditions. Under high load driving conditions where high torque and output is required, intake valve timing is controlled optimally according to the engine speed, producing valve overlap and an intake inertia effect. VVT-i eliminates the traditional compromises between low-end torque and high-rpm horsepower. By taking maximum advantage of this overlap, intake air volume is increased, thus torque and output are improved. At the same time, enhancing fuel economy and reducing Oxides of Nitrogen ($N0_x$) and Hydrocarbons (HC) in emission gas so effectively that it eliminates the need for such emissions devices as the EGR valve and provides a large increase in mid-range power.

Valve Timing

For an engine to operate smoothly under a wide range of operating conditions, it must maintain high dynamic compression pressure, proper ignition timing, and a good air-fuel mixture. Ignition timing is variable, engine speeds and loads have different requirements. Air fuel mixture and the inertia of combustion gas in the cylinders are factors that are considered during the design stage of an engine. To obtain maximum engine output, it is necessary to draw as much air-fuel mixture into the cylinder during the intake phase of the combustion cycle and to discharge as much post combustion exhaust as is possible on the exhaust stroke.

Variable Valve Timing

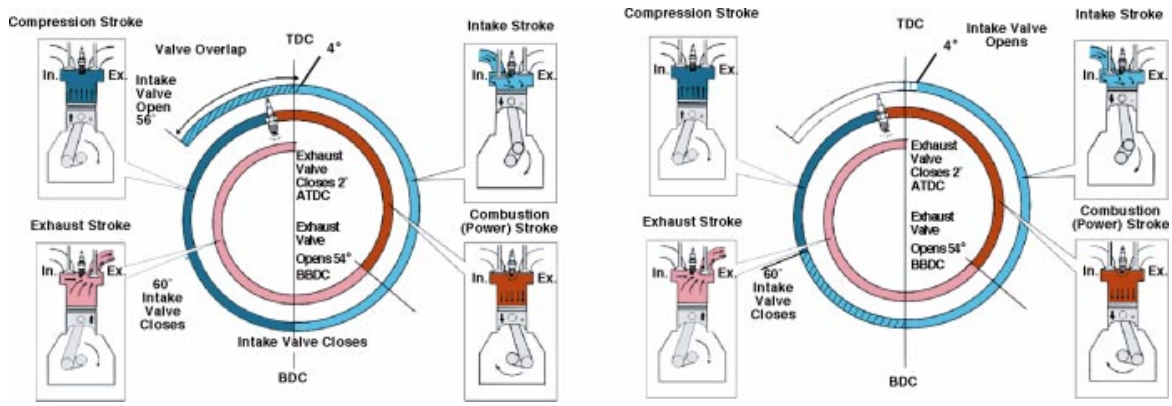

Fig. 4-112

Valve timing is expressed in terms of the crankshaft angle from the piston at top dead center (TDC) or at bottom dead center (BDC). The optimal valve timing is pre-determined for each engine. To maximize the length of time the valves are open, a “valve overlap” has been engineered into the valve timing. The intake valve starts to open before the piston begins its intake stroke (before it reaches TDC) and closes after it reaches BDC (during the compression stroke). The exhaust valve opens before the piston enters the exhaust stroke and closes after TDC (after entering the intake stroke).

Generally, a larger valve overlap gives better high-speed performance. Too large an overlap may cause unstable idle.

The Effects of Continuous Valve Timing Changes Under Various Driving Conditions

Smooth Engine Idle

Smooth engine idle demands very low camshaft overlap (the intake begins to open when the exhaust valve is closed). At idle rpm, valve overlap is eliminated by retarding the intake camshaft. With the intake valve opening after the exhaust valve has closed, there is no blow-back of exhaust gases to the intake side. Combustion is stable, engine idle is smooth at the lower rpm, and fuel consumption is improved.

Improved Torque in the Low To Medium Range Under Heavy Load

In the low to medium speed range with a heavy load, the camshaft is advanced increasing the valve overlap. This has two effects. First, the exhaust gases help with the induction of the intake mixture. Secondly,

by closing the intake valve early, the air/fuel mixture is not discharged back into the intake. Thus, air intake is maximized to produce increased torque (therefore horsepower) in the low and medium rpm range. Improved volumetric efficiency (optimized engine breathing) produces improved acceleration.

Volumetric Efficiency

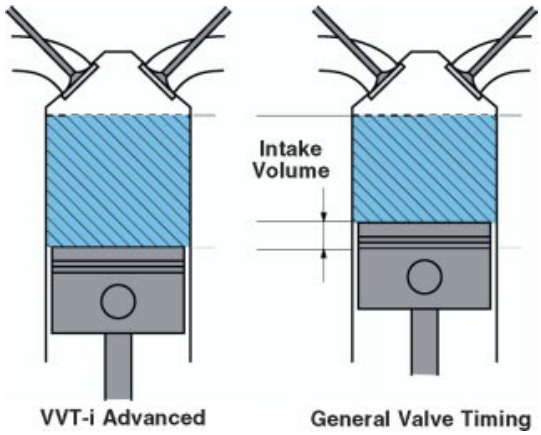

Fig. 4-113

High Engine Speed at Full Throttle

High power output during rapid acceleration (wide-open throttle) is enhanced by valve timing with a high overlap (the intake opens while the exhaust valve is open). This effects a more complete filling of the cylinder (using low pressure in the exhaust system to draw in additional air fuel mixture).

At high engine speed, at full throttle, the cam timing overlap is reduced to produce higher torque and more horsepower.

Exhaust Gas Recirculation (EGR) Effect

Best emissions performance during cruise (part throttle) is enhanced by valve timing with medium overlap (the intake opens a small amount while the exhaust valve is open) allowing incoming air fuel mixture to be diluted with inert exhaust gas remaining in the cylinder. The return of exhaust gas into the cylinder reduces combustion temperature, resulting in a reduction in $N0_x$. Additionally, HC are reduced because some of the unburned air/fuel mixture from the exhaust stroke is returned to the intake side (due to negative pressure) for re-combustion. Finally, $C0_2$ (Carbon Dioxide) is reduced as a result in the decrease in fuel consumption.

EGR Effect

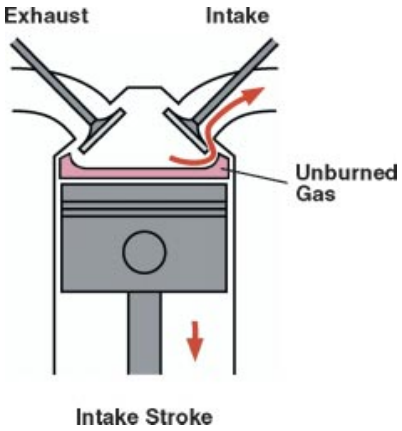

Fig. 4-114

Enhanced Fuel Economy

A reduction in intake stroke resistance enhances fuel economy. In the medium-load operation range, when the valve overlap is increased, the vacuum (negative pressure) in the intake manifold is reduced. This reduces resistance to the piston moving downward on the intake stroke resulting in more energy available to propel the vehicle. At idle, with no overlap, the idle speed is lower which also enhances fuel economy.

VVT-i Actuators (Controllers)

All Lexus vehicles equipped with VVT-i primarily operate in a similar manner and produce the same beneficial results. However, there are two different type actuators (controllers) used in Lexus VVT-i systems.

The purpose of the actuator (controller) is to control the position of the intake cam. Directed by the ECM, an Oil Control Valve (OCV) varies oil pressure to the actuator to continually adjust the timing throughout the engine's operating range.

VVT-i System (Helical Types)

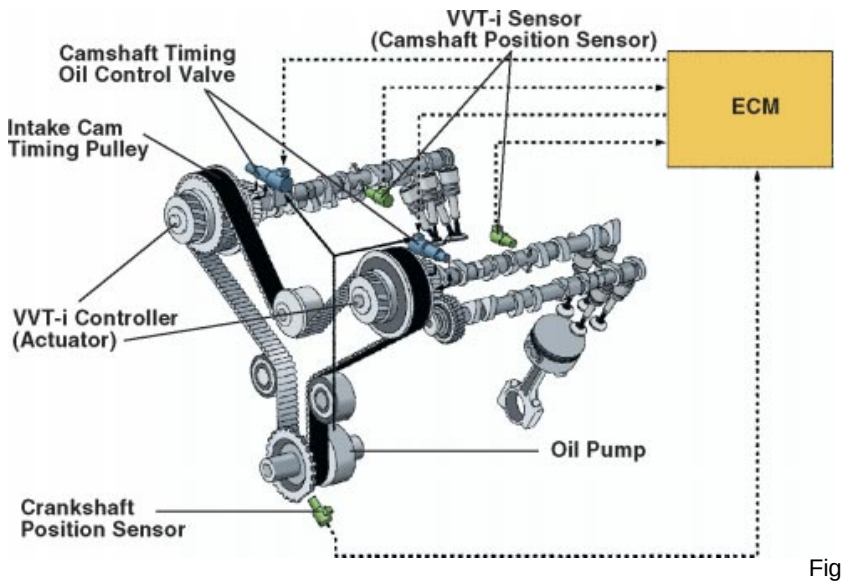

Fig. 4-115

Helical Type Actuator

A helical type actuator (controller) is used on the V-8 (3UZ-FE; 1UZ-FE) engines and the In-line 6 (2JZ-GE) engine. A hydraulic piston with a helical gear drives the intake camshaft. The actuator changes the relation of the intake cam position to the crankshaft position. The timing belt drives the VVT-i actuator outer gear which is attached to the intake camshaft drive gear. The intake drive gear, in turn, drives the scissors gear attached to the exhaust camshaft. This maintains a consistent relationship with the exhaust cam.

VVT-i Actuator

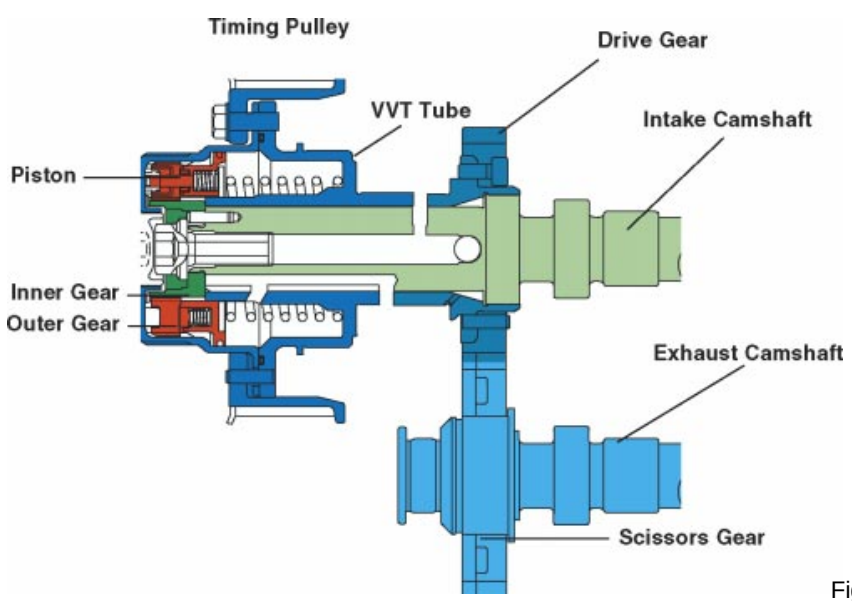

Fig. 4-116

The inner gear is affixed to the camshaft and a movable piston that is placed between the outer and inner gears. Having helical splines (twisted, grooves) on the pistons inner and outer parameters, the piston moves laterally (front-to-back) to shift the phase of the outer and inner gear causing the valve timing to continually change based upon the signals received from the ECM. This shifting of the piston position provides up to 50° of advance intake cam timing in V-8 engines and up to 60° advance in an in-line 6 engine.

Helical Controller (Actuator) & Cams

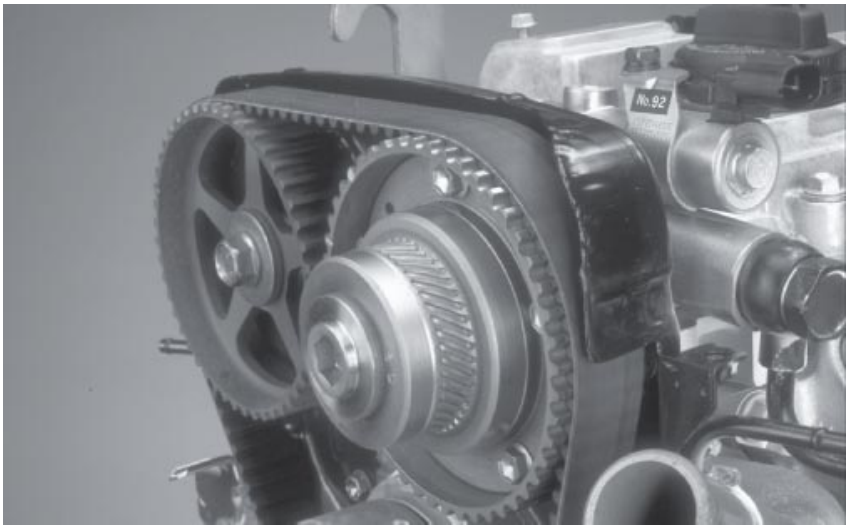

Fig. 4-117

Helical Controller (Actuator) Assembly

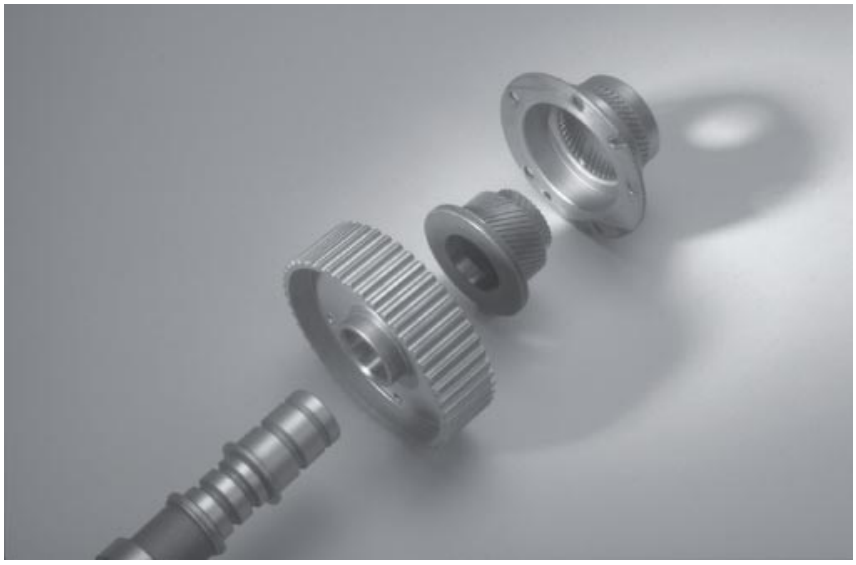

Fig. 4-118

NOTE

Only the intake cam moves in relation to the timing pulley. The timing belt pulley and scissors gear are fixed to the actuator outer tube. Exhaust cam timing does not change.

Vane Type Controller (Actuator)

A different, vane type actuator (controller) is used on vehicles equipped with the V-6 (1MZ-FE) engine.

The vane type actuator (controller) consists of a housing, driven by the exhaust cam and a vane (inner portion) affixed to the intake camshaft.

The actuator (controller) is installed at the rear of the intake cam as shown in the illustration.

Vane Type Controller (Actuator) Assembly

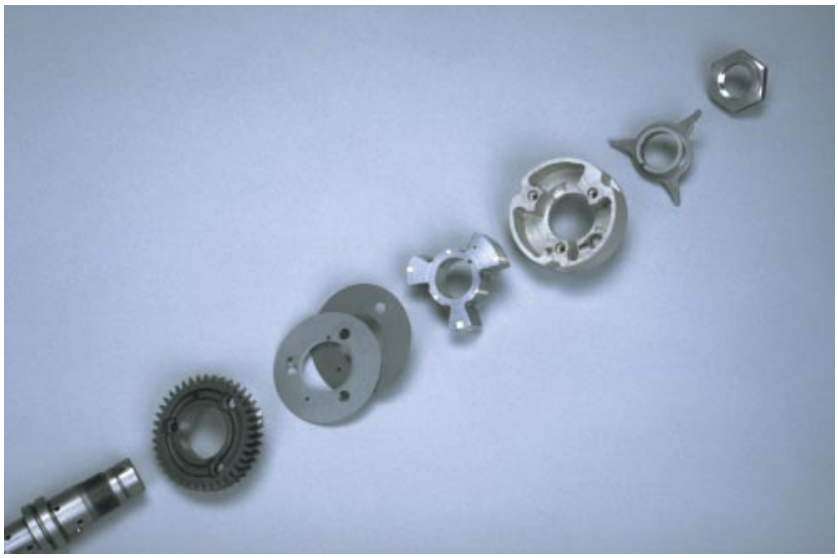

Fig. 4-119

Vane-Type Controller (Actuator) & Cam

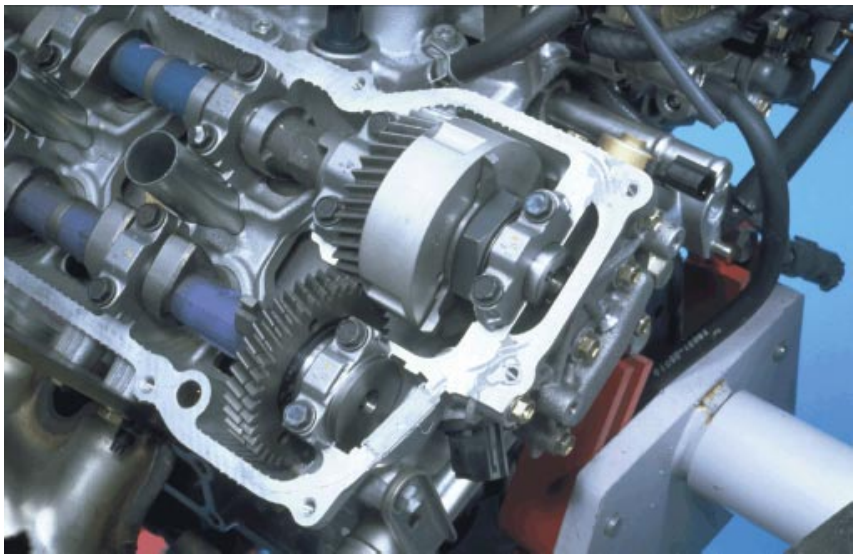

Fig. 4-120

The camshaft on the exhaust side, is driven by the timing belt of the crankshaft pulley that drives the actuator. The actuator drives the intake cam and controls valve timing.

Camshaft Drive

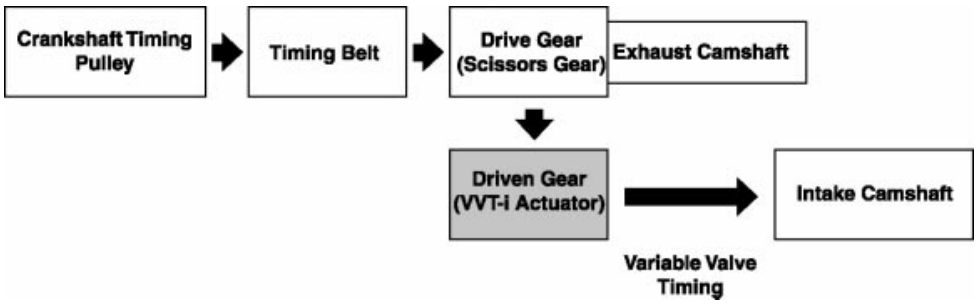

Fig. 4-121

The camshaft drive gear (exhaust side) is attached to the scissors gear to reduce gear noise due to torque variation. The camshaft driven gear (intake side) is integrated with the VVT-i actuator (controller) to vary the intake camshaft valve timing.

Other Components of The System

- The Camshaft Timing Oil Control Valve is controlled by the ECM. It controls the spool valve position and delivers hydraulic pressure to the actuator (controller). It directs engine oil pressure to the advance or retard side of the VVT-i Actuator (controller) (reference the illustration during the following discussion).

Oil Control Valve

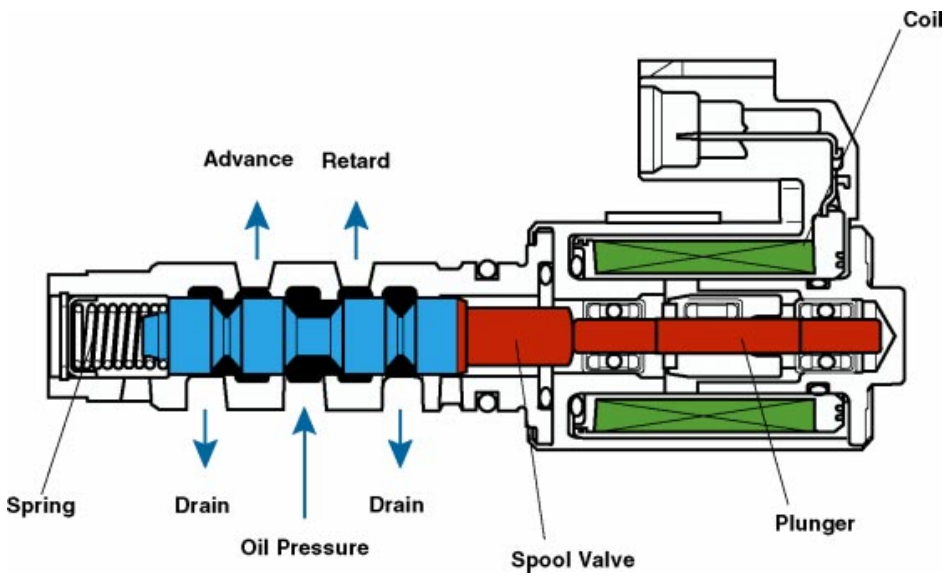

Fig. 4-122

More specifically, the spool valve position is determined by magnetic field strength opposing spring pressure. As the ECM increases the pulse width (duty ratio), the magnetic field moves the spool valve to overcome spring pressure and direct more oil to the advance side.

To retard the timing, the ECM decreases the pulse width and spring pressure moves the spool valve towards the retard position.

When the desired camshaft angle is achieved, the ECM will generate a pulse width signal to move the spool valve to a hold position. In the hold position, the oil is trapped in the actuator (controller) and maintains the desired angle.

When the engine is stopped, the spring pushes the spool valve to the most retarded position.

- The Crankshaft Position Sensor provides crankshaft position feed back to the ECM.
- The Camshaft Position Sensor is used to detect the camshaft position. A protrusion on the timing pulley is used to generate 1 pulse for every 2 revolutions of the crankshaft (one revolution of the cam.)
- The VVT Sensor provides camshaft position feed back to the ECM. It is mounted on the intake side of each cylinder head. To detect the camshaft position, a timing rotor is provided and used to generate 3 pulses for every 2 revolutions of the crankshaft.

VVT-i Sensor

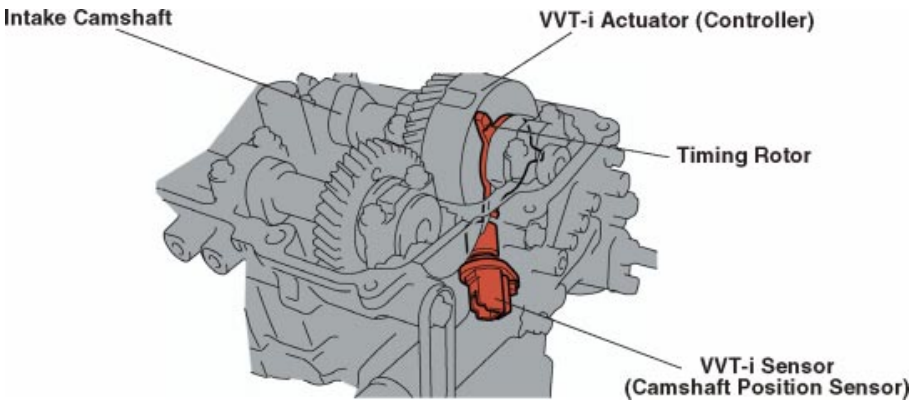

Fig. 4-123

Now let's take a brief look at how the system operates. For the purpose of this explanation, the VVT-i System with a vane-type actuator (controller) will be examined.

VVT-i Control Components

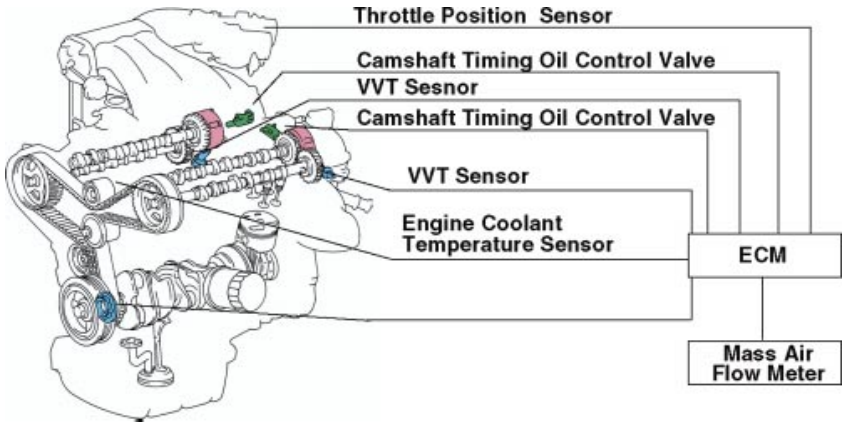

Fig. 4-124

System Operation

The ECM determines the optimal valve timing under each driving condition based upon the engine speed, intake air volume, throttle position, and coolant temperature and controls the Camshaft Timing Oil Control Valve.

VVT-i Control System

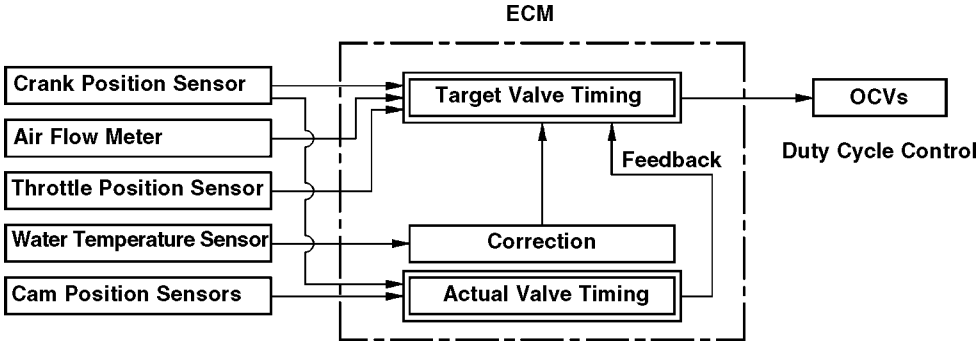

Fig. 4-125

The ECM also uses signals from the VVT Sensors and crankshaft position sensor to detect the actual valve timing for feedback control to achieve the target valve timing. The table below illustrates the relationship (reference it during the following explanation).

VVT-i Operating Conditions

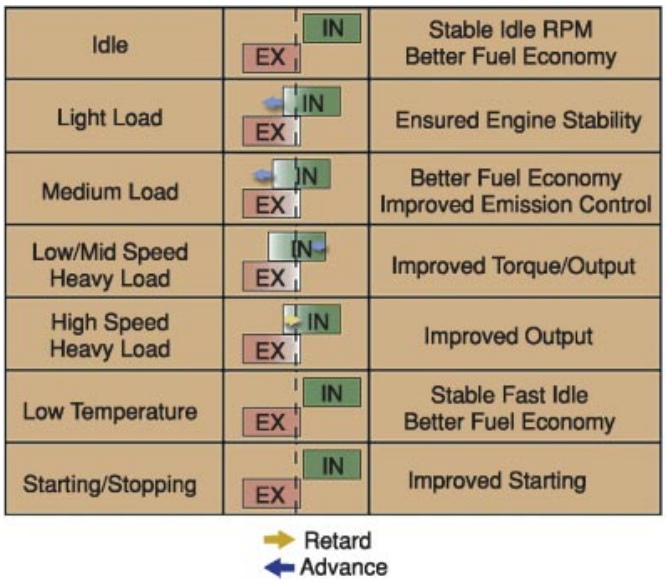

Fig. 4-126

During idle, the objective is to eliminate overlap to reduce blow-back to the intake side. The effect is to stabilize idle rpm and obtain better fuel economy.

At light load, the objective is to decrease overlap to eliminate blow-back to the intake side. The effect is engine stability.

At medium load, the objective is to increase overlap to increase EGR effect and reduce resistance to the piston's downward movement on the intake stroke, thereby conserving available energy. The effect is reduced emissions through combustion control and better fuel economy.

Low to medium speed range with heavy load, the objective is to advance intake valve closing to improve volumetric efficiency. The effect is improved torque output in these ranges.

High-speed range with heavy load, the objective is to delay intake valve opening to prevent blow-back and improve volumetric efficiency. The effect is improved output in these ranges.

At low temperatures, the objective is to eliminate overlap to prevent blow-back to the intake side which reduces the amount of fuel needed and stabilizing idle rpm to provide decreased fast idle rpm. The effect is better fuel economy and stabilized fast idle rpm.

During start, stopping, and default, the objective is to eliminate blow-back to the intake side. The effect is improved starting.

As indicated previously, the Actuator (Controller) consists of a housing driven from the exhaust camshaft and a vane attached to the intake camshaft. The Oil Control Valve spool valve position is varied constantly to obtain the optimum valve timing based upon a duty signal sent from the ECM. Oil pressure sent to the advance or retard chambers of the vane causes the camshaft to rotate in relation to the driven gear.

VVT-i Controller (Actuator)

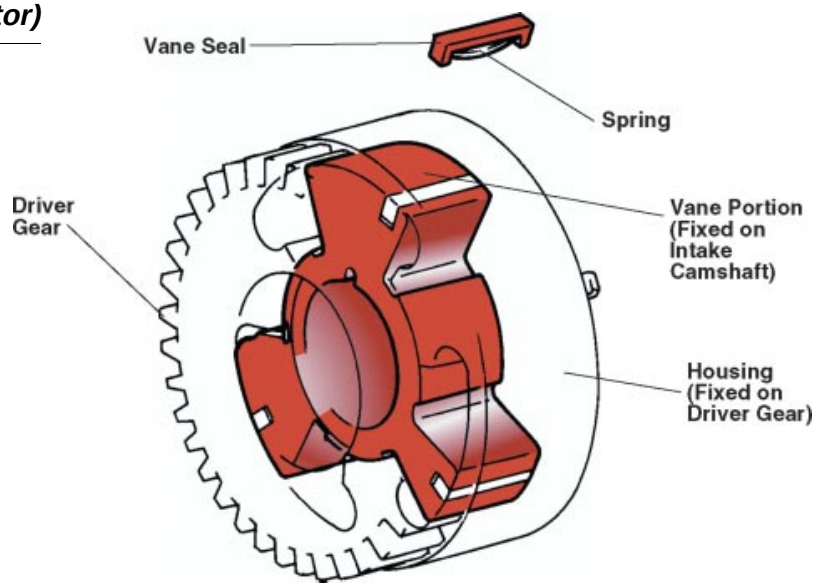

Fig. 4-127

NOTE

In the helical type, timing is controlled by the hydraulic actuator (controller) within the camshaft pulley. In the retard position, the piston is in the full forward position. In the advance position, as the piston moves to the rear, it's helical cut gear rotates the camshaft, advancing it in relation to the exhaust camshaft.

Timing Advance

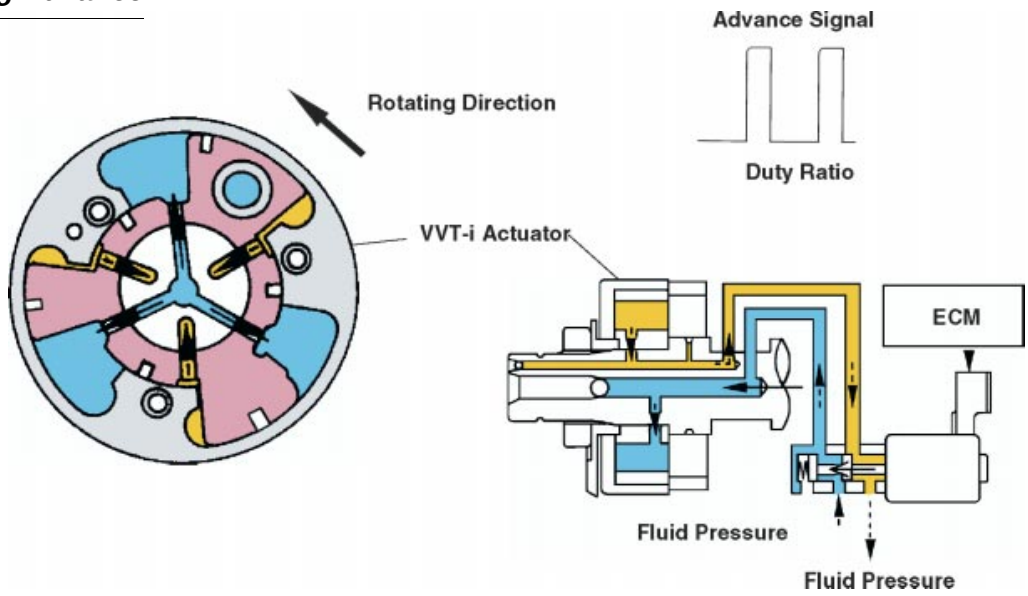

Fig. 4-128

Timing Advance

When the ECM issues an advance signal, the Oil Control Valve is positioned (as shown in the illustration). Oil pressure is added to the advance side oil chamber to rotate the camshaft in the timing advance direction.

Timing Retard

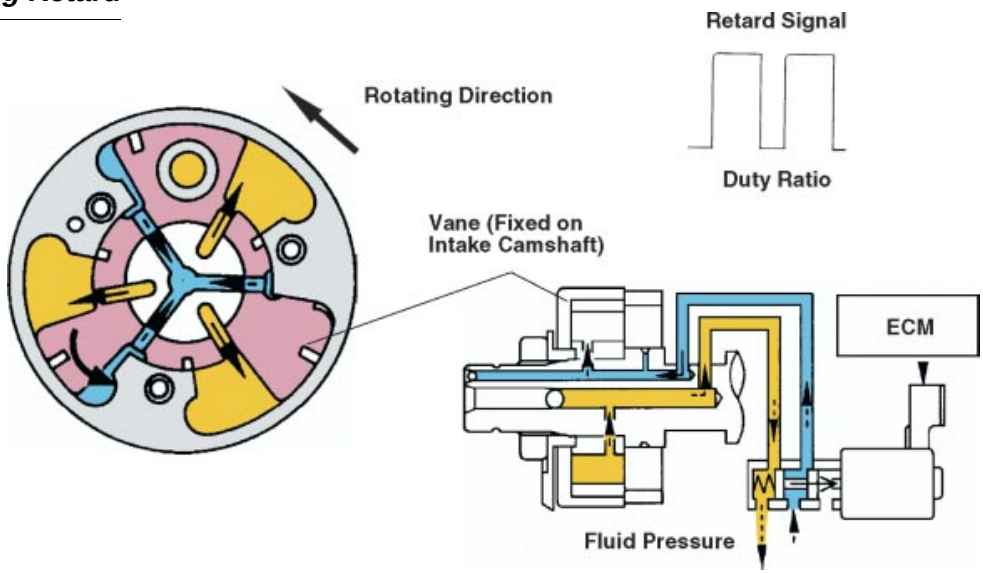

Fig. 4-129

Timing Retard

When the ECM issues a retard signal, the Oil Control Valve is positioned (as shown in the illustration). Oil pressure is added to the Retard (delay) side oil chamber to rotate the camshaft in the timing retard direction.

Hold

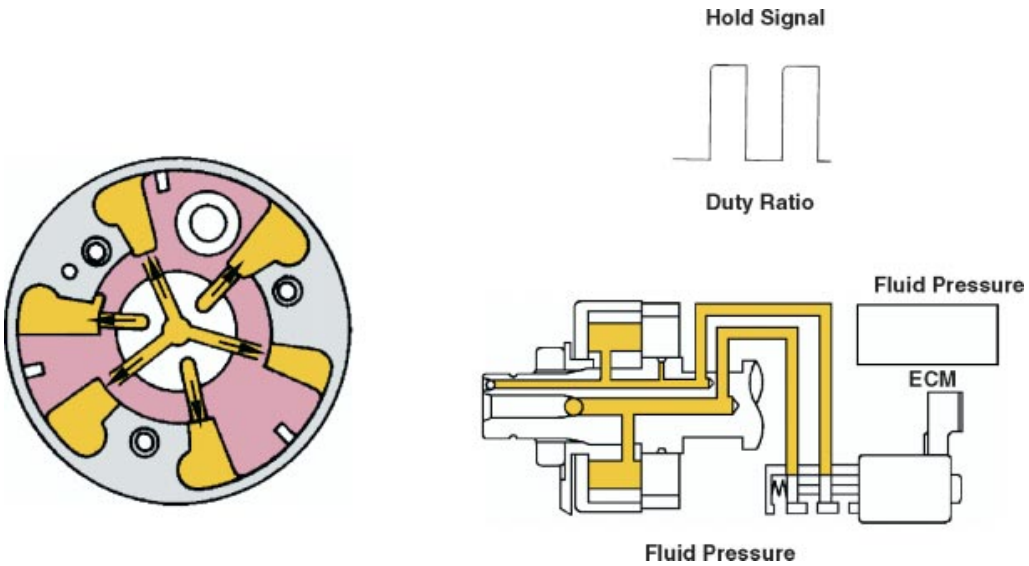

Fig. 4-130

Timing Hold

The ECM calculates the target timing angle according to driving conditions. After setting the target timing, the valve timing is held by keeping the Camshaft Timing Oil Control Valve in the neutral position. This keeps valve timing at the desired target position and prevents the engine oil from running out.

Electronically Controlled Transmissions

A/T Basics

The purpose of a transmission is to transmit torque to the vehicle's drive wheels and increase the torque that is available throughout a wide range of different vehicle speeds. The amount of torque the engine produces is usually greatest between 2500 and 5000 rpm. Through the use of different gear ratios in the transmission, the engine's speed can be kept within an acceptable rpm range, providing the torque needed as the vehicle accelerates or cruises. Transmissions also serve to change the rotational direction of the vehicle's wheels to allow for movement in the reverse direction.

Lexus vehicles have two different powertrain layouts, rear wheel drive transmissions and front wheel drive transaxles. All, are electronically controlled.

Torque Converter - Brief Overview

The torque converter in a transmission is filled with automatic transmission fluid supplied by the oil pump. It performs several functions:

- It transfers power from the engine to the input shaft of the transmission, multiplying torque generated by the engine while accelerating.
- It serves as an automatic "clutch" which transmits engine torque to the transmission at all speeds and allows the engine to idle while the vehicle is standing still with the transmission in gear.
- It absorbs torsional vibration of the engine and drivetrain.
- It drives the oil pump.

The torque converter is equipped with a lock-up clutch. When the engine is running, it turns a pump impeller in the torque converter which causes the transmission fluid to swirl around the converter housing. The swirling fluid pushes against a turbine in the converter, causing the transmission input shaft to rotate. Since all power is transmitted through the automatic transmission fluid, there is some slippage between the engine and transmission. The torque converter lock-up clutch is used to eliminate any slippage at cruising speeds.

Hydraulic Control System Brief Overview

The hydraulic control system is composed of the oil pump, the valve body, the solenoid valves, the accumulators, the clutches and brakes, as well as, the fluid passages which connect all of these components. Based upon hydraulic pressure produced by the oil pump, the hydraulic control system governs the hydraulic pressure acting on the torque converter clutch, the clutches, and the brakes, based upon the current driving conditions.

In a hydraulically controlled transmission, the valve body is constructed in sections. It is located directly below the transmission case. It's purpose is to convert engine load and vehicle speed into hydraulic signals. On the basis of these signals, hydraulic pressure is applied to the clutches and brakes inside the transmission to automatically choose the appropriate gear ratio according to driving conditions.

The valve body consists of a maze of passageways, valves and springs. Changes in vehicle speed, shift lever position, and engine load are interpreted by the ECM which directs actuators in the valve body to open and close, thereby directing pressurized hydraulic fluid to the various passageways. This pressure in turn applies the clutches and brakes in the transmission that determine which component of the planetary gear train will be utilized to provide the appropriate gear.

NOTE

The aforementioned information is provided as background information, keep in mind all Lexus transmissions are electronically controlled.

Planetary Gear Unit - Brief Overview

The planetary gear unit provides different gear ranges for the transmission. The unit consists of:

- Planetary gear sets
- Clutches and brakes (operated by fluid pressure to control the operation of the gears)
- Shafts (to transmit engine torque)
- Bearings

The planetary gear unit is a series of interconnecting gears consisting of a sun gear, several pinion gears connected by a carrier gear, and a ring gear. The unit is called a planetary gear assembly because the pinion gears rotate around the sun gear, resembling planets revolving around the sun. The sun gear is located in the center of the assembly. Several pinion gears rotate around the sun gear, and the ring gear surrounds the pinion gears.

Clutches and Brakes Brief Overview

Internal clutches connect and disconnect the power flow through the planetary gears to transmit and disconnect power to the output shaft of the transmission. Multi-plate clutches consist of several alternately arranged clutch discs and steel plates. Hydraulic pressure is used to apply and release the clutches. Clutches lock two rotating components together.

Brakes in the automatic transmission, hold specific planetary gear components (sun gear, ring gear, or carrier) in place to obtain the different gear ratios. Brakes are operated by hydraulic pressure and may be made

up of either alternating plates (similar to a clutch) or simply a band around a planetary gear assembly drum that tightens by hydraulic pressure to stop its motion.

One-way clutches lock a rotating component to the case based on its direction of rotation.

An electronically controlled transmission is similar to a non-electronically controlled transmission except for the valve body and the electronic control components (such as an electronic control module (ECM), sensors, and actuators). Additionally, gearshift timing is controlled electronically, rather than by hydraulic pressure alone as in a conventional valve body.

The ECM receives information about the gear range the driver has selected based upon shift lever position sensor signals, throttle opening angle, vehicle speed sensor input, engine speed, vehicle acceleration, etc. The ECM then controls the operation of the clutches and brakes, the timing of shift points, and the torque converter lock-up, thereby determining the appropriate shift patterns appropriate to the driving conditions.

A650E Transmission

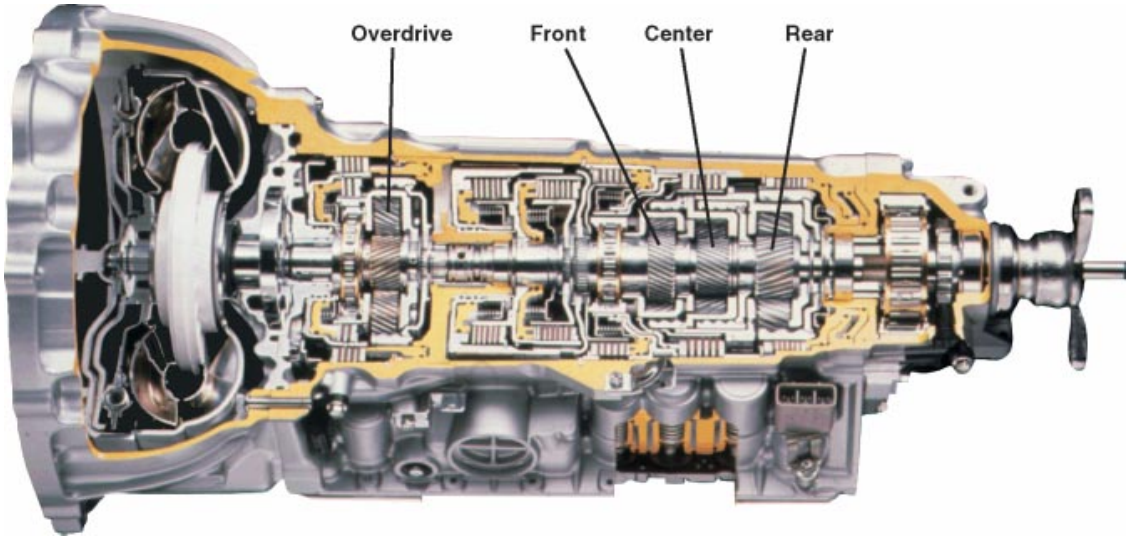

Fig. 4-131

A650E The A650E is a sophisticated 5-speed automatic transmission with a gear train that includes 4 sets of planetary gears. The A650E Transmission is used on the LS 400, SC 400, and GS 300/400.

Electronic Control System

The electronic control system is primarily divided into three groups, sensors, ECM, and actuators. Solenoid valves are actuators that perform specific functions based upon signals transmitted by the ECM. In the A650E transmission, solenoid valves SLN, SLU and SLT are used by the ECM to actuate operations based upon sensor inputs. Solenoid Valve SLT is used for line pressure control.

Solenoid valves 1, 2, and 3 are used for shifting. Solenoid valve 3 is also used for engine brake control. It turns ON/OFF according to signals received from the ECM to switch the 4-5-shift valve and to switch the engine brake of the 2nd and 3rd gear. Solenoid 4 controls the supply and discharge speed of the OD brake pressure and switches OD direct clutch pressure.

To achieve smooth shifting, solenoid valve SLN controls the accumulator back pressure in order to precisely regulate the hydraulic pressure that is applied to the clutch.

In the LS 400 A650E transmission, a linear solenoid valve rather than a throttle valve and throttle cable control line pressure. Based upon the throttle opening angle, real-time engine torque information provided by the engine sensors, and the internal operating conditions of the torque converter and transmission, the ECM transmits a signal to solenoid valve SLT to generate line pressure. This enables the line pressure to be finely controlled at a high rate of precision based upon engine output, traveling conditions, and ATF temperature, to effect smooth shift characteristics and optimize the workload on the oil pump.

The optimum shift pattern is selected from 3 shift patterns (power, normal, and snow) in the ECM using a pattern select switch. The ECM sends current to the NO. 1, NO. 2, and/or NO. 3 solenoid valves based upon signals from each sensor and shifts the gears accordingly.

Flex Lock-up Clutch Control

In addition to the conventional lock-up clutch control, the A650E transmission torque converter clutch supports a Flex Lock-Up Clutch Control improving fuel economy.

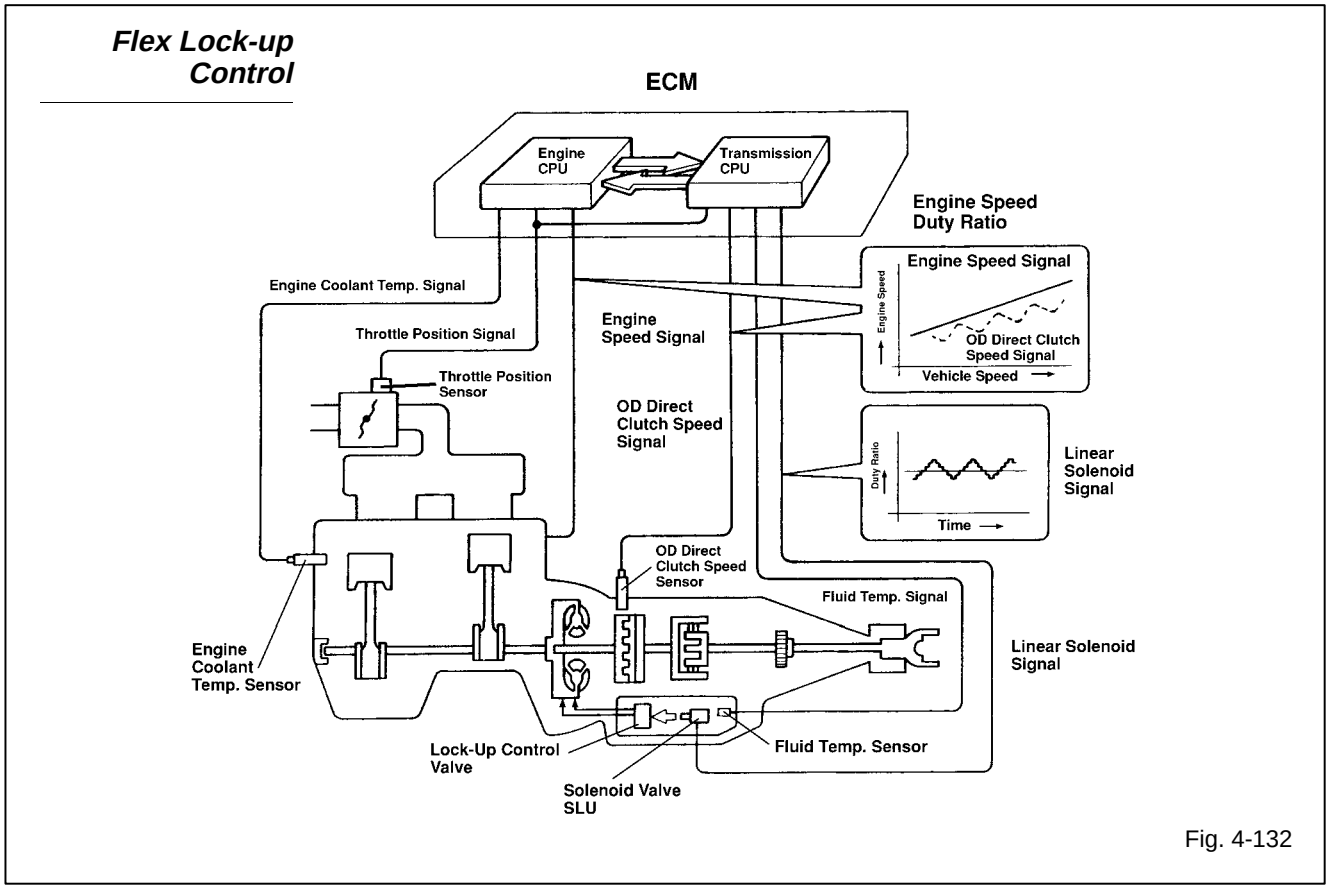

Fig. 4-132

In the low to mid-speed range, Flex Lock-up Clutch Control directs solenoid valve SLU and provides an intermediate mode between the ON/OFF operation of the lock-up clutch in order to improve the energy-transmitting efficiency in this range. This increases the operating range of the lock-up clutch. The flex lock-up clutch control operates in 4th and 5th gears in D range, and in the 4th gear in the 4 range. The lock-up clutch operates in 5th gear in the D range and in the 4th gear in the 4 range.

The optimum lock-up pattern is selected from two lock-up patterns in the ECM using a pattern select switch. The ECM sends current to the solenoid valve SLU based on signals from each sensor and engages or disengages the lock-up clutch.

High Response Shift Control

A high response clutch hydraulic pressure control electronically provides high response engine torque control during shifting and optimizes the supply and discharge speed of the hydraulic pressure to the clutch using solenoids to activate control valves. This results in the reduction of shift shock and an improved shift response.

The high response engine torque control reduces shift time considerably. This is effected in cooperation with the ETCS-i by retarding the engine

ignition timing and controlling throttle valve opening during shifts. A conventional automatic transmission ordinarily has one circuit for supplying and discharging the hydraulic pressure to the clutch and brake. However, in the A650E automatic transmission, a mechanism has been developed to control solenoid valves 3 and 4 to activate the control valve, which switches the supply and discharge speeds of the clutch and brake pressure.

High Response Fluid Control

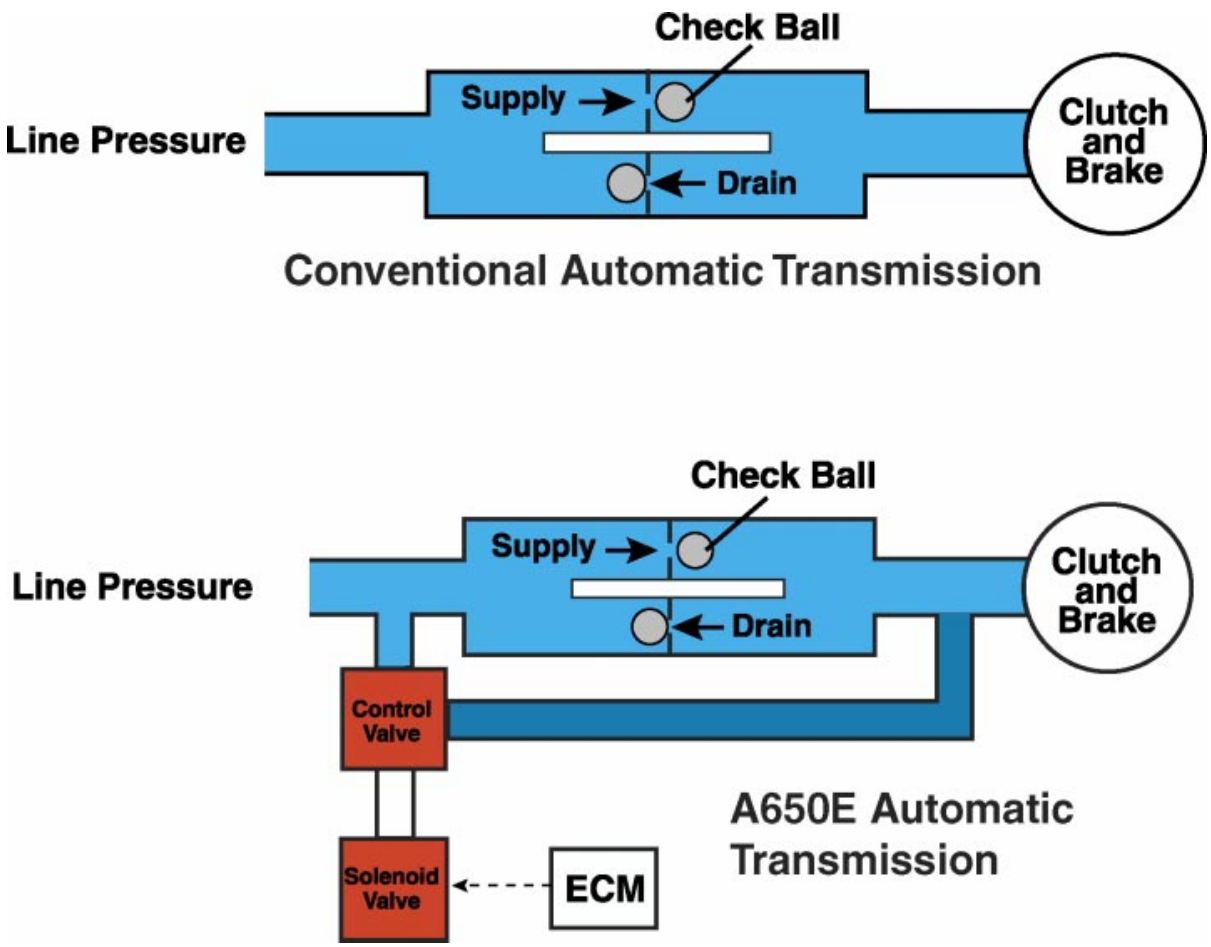

Fig. 4-133

As a result, hydraulic pressure can be supplied or discharged slowly when reduction of shift shock is desirable, or supplied more quickly, when response is more important.

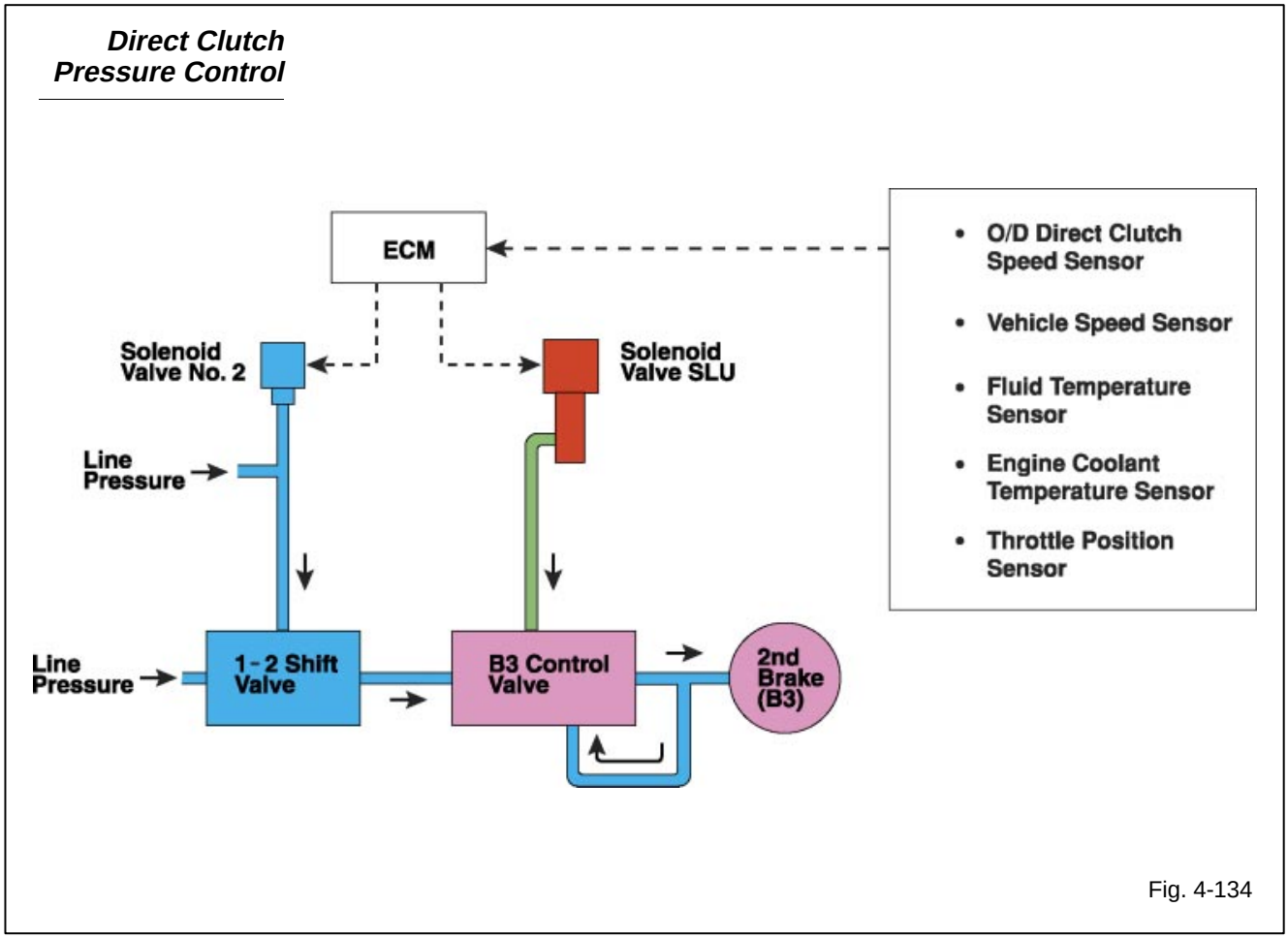

Fig. 4-134

Clutch Pressure Control

A direct clutch pressure control system has been developed for shifting from 1st to 2nd gear. A conventional automatic transmission uses an accumulator to execute clutch pressure control during the shift from 1st to 2nd gear.

In contrast, this system controls the solenoid valve SLU to regulate the 2nd brake (B3) hydraulic pressure for 2nd gear, via the B3 control valve, without using an accumulator. This provides highly precise hydraulic control that cannot be achieved by a conventional system.

Optimal shift timing and hydraulic pressure clutch application are controlled based upon rpm and engine torque information.

With Clutch to Clutch control (up shift) 2nd to 3rd gear, the 2nd brake (B3) hydraulic pressure for the 2nd gear is regulated (synchronized) with the 3rd brake (B2) hydraulic pressure for 3rd gear. B2 pressure is applied to B3 control valve for B3 release.

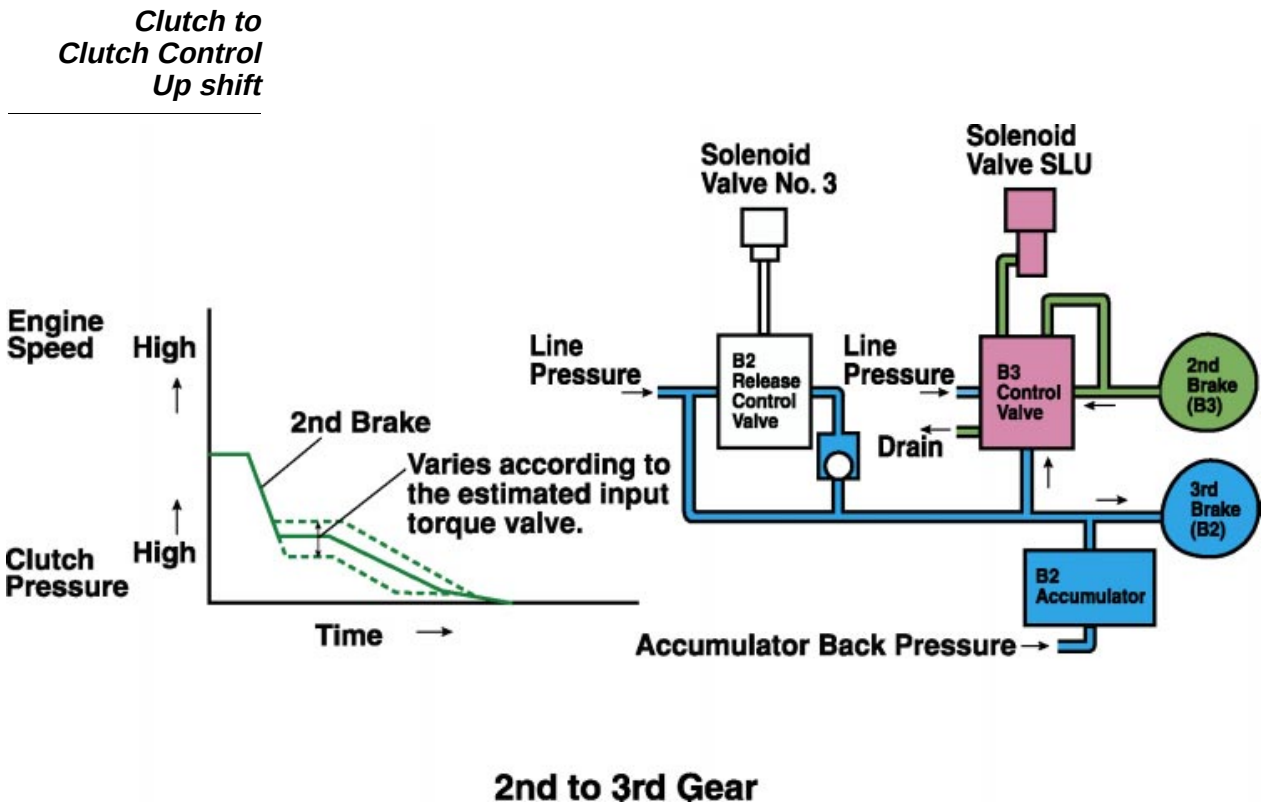

Fig. 4-135

The 2nd brake hydraulic pressure is regulated by the hydraulic pressure from solenoid valve SLU and from the 3rd brake hydraulic pressure based upon torque input. Based on the input shaft speed during shifting, solenoid valve SLU is corrected to control the 2nd brake.

Clutch-to-Clutch Control Downshift

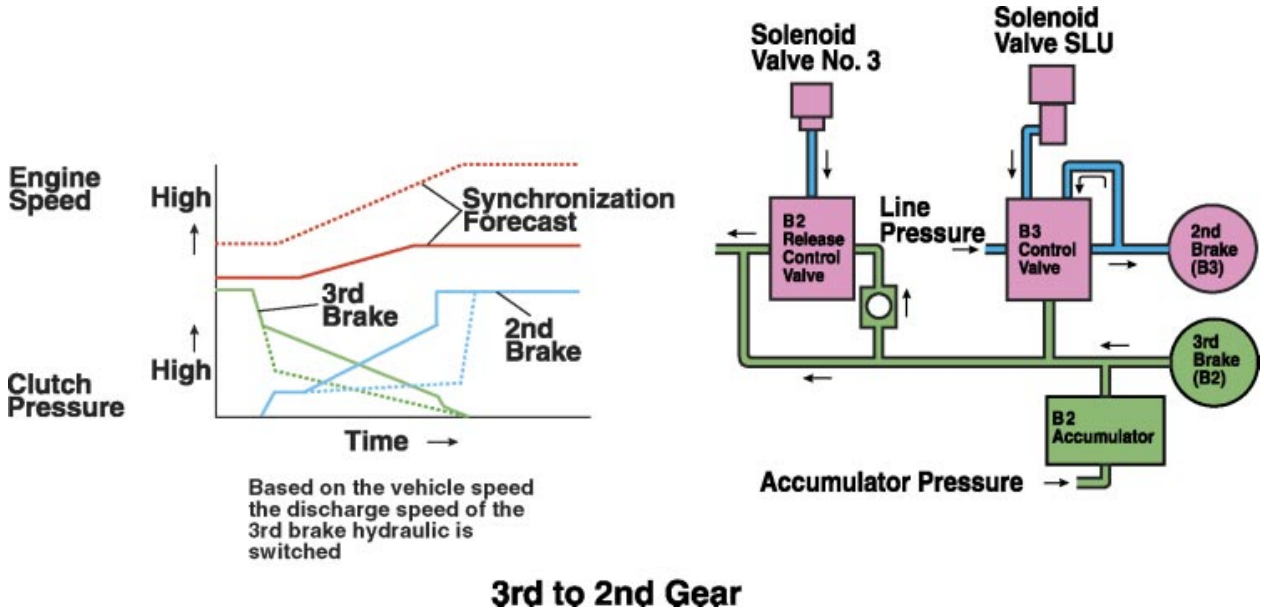

3rd to 2nd Gear

Fig. 4-136

With Clutch-to-Clutch control (downshift) 3rd to 2nd gear, the SLU controls hydraulic pressure to B3 control valve for B3 apply. B2 discharge speed is controlled by NO. 3 solenoid.

Based on changes in engine speed, the timing for synchronizing the clutch is forecast and the 2nd brake hydraulic pressure is increased. Based on vehicle speed, the discharge speed of the 3rd brake hydraulic pressure is switched to achieve reduced shift shock and improved shift response.

Artificial Intelligence (AI)

In addition to the pattern select switch which provides for the switching of shift patterns, the Artificial Intelligence (AI) Shift Control enables the ECM to estimate road conditions and the driver's intention and automatically switch to an optimal shift pattern. This computerized control of the automatic transmission is associated with a reduction in the number of shifts. This effectively results in improved fuel consumption, added vehicle stability, and prevention of the brake fade phenomenon.

Based on input signals from various sensors, the ECM determines the road conditions and intentions of the driver. The shift pattern is automatically regulated to respond based upon this feedback system.

In a conventional automatic transmission, when the vehicle is accelerating or decelerating while driving uphill, depending on the circumstances, the transmission will shift up and down frequently. When driving downhill, the transmission shifts quickly even at low driving speeds (because the transmission is up-shifted when the throttle valve is almost completely closed) occasionally creating a condition in which it is difficult to apply engine brake.

Artificial Intelligence (AI) Shift Control

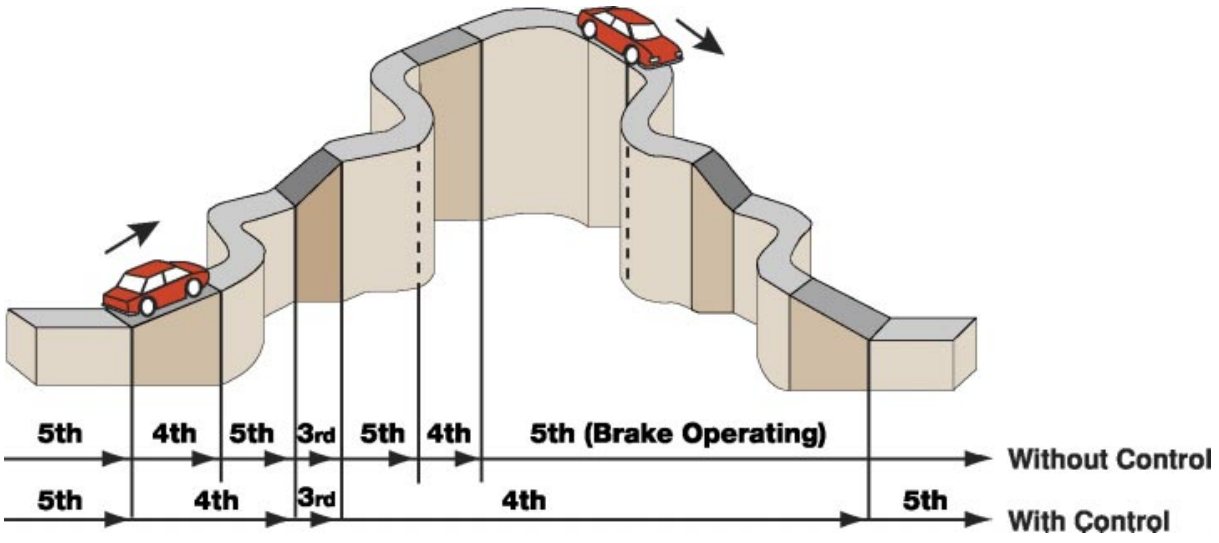

Fig. 4-137

In AI "road condition support control," the uphill or downhill driving conditions are assessed based upon the throttle opening angle, vehicle speed, engine speed, vehicle acceleration, etc. The ECM estimates the grade by comparison between target acceleration vs. actual acceleration.

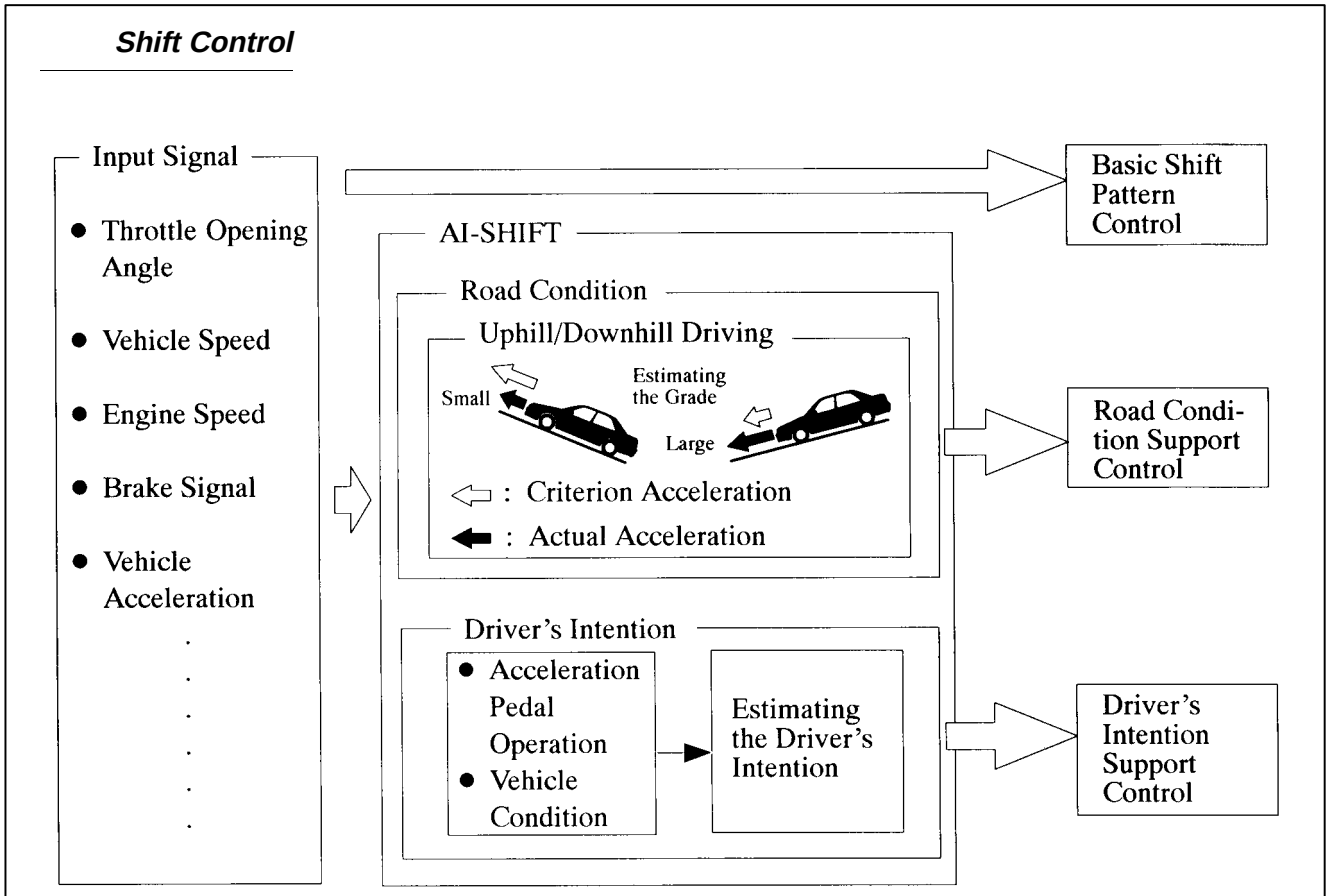

Fig. 4-138

Uphill travel is judged when the actual acceleration is smaller than the reference acceleration, and downhill travel, when it is greater than the reference value. It detects winding roads based upon inputs from the yaw rate sensor, deceleration sensor, and steering angle sensor. Thus the transmission is restrained from up shifting to 5th gear when driving uphill, and automatically downshifts to 4th gear to achieve engine braking when driving downhill.

ATF type T-IV or equivalent fluid type is recommended for the A650E transmission.

AT Repair Manuals

The AT Section of the Repair Manual contains general inspection information for certain AT components (shift lock system and the torque converter clutch and drive plate inspection), “on vehicle” service information (such as the oil seal replacement and valve body inspection), and transmission/ transaxle removal and installation procedures. It does not contain detailed information regarding the disassembly, inspection, or reassembly of the transmission/transaxle. Lexus provides a separate repair manual applicable to each transmission/transaxle that provides this type of information.

A650 AT Repair Manual

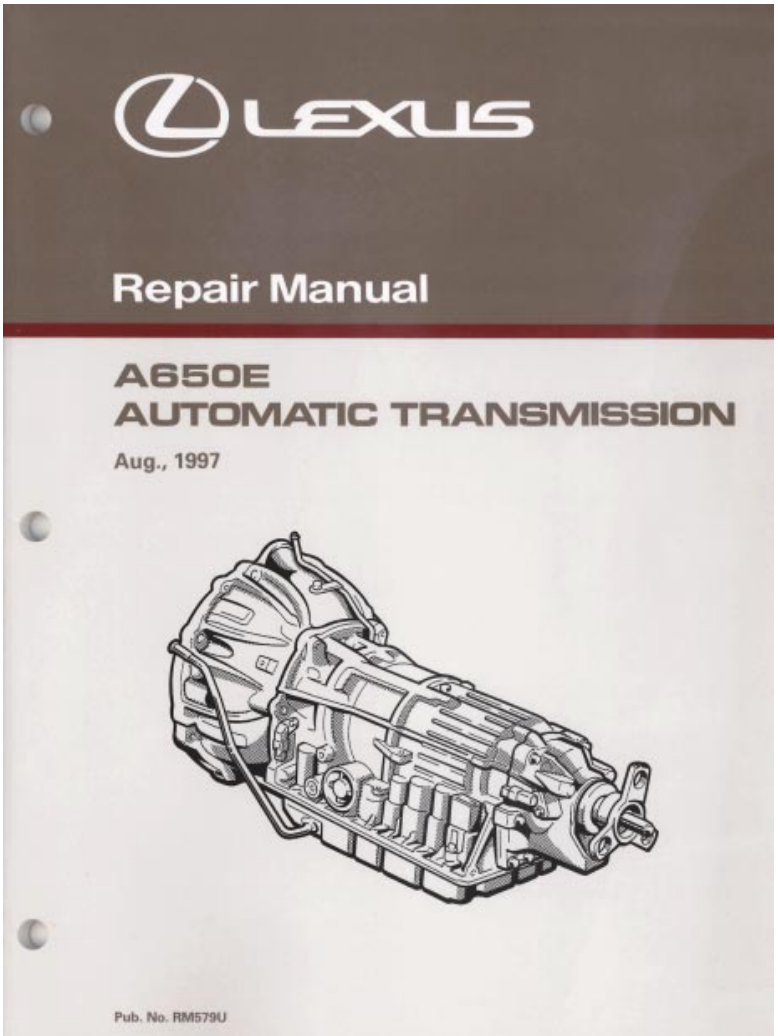

Fig. 4-139

Both manuals provide a Clutch Application Chart. Shown is the Clutch Application Chart for the A650E Automatic Transmission.

Clutch Application Chart

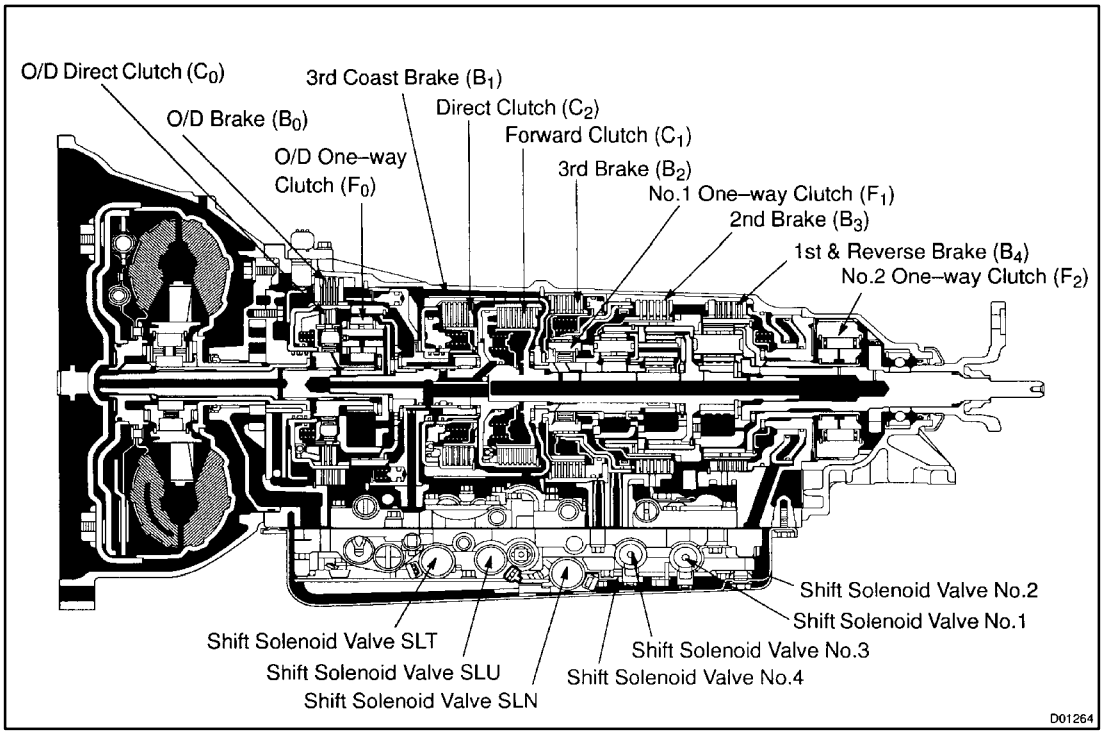

Shift Lever Position	Gear Position	S1	S2	S3	S4	C_0	C_1	C_2	B_0	B_1	B_2	B_3	B_4	F_0	F_1	F_2
P	Park	ON	OFF	ON	OFF	○										
R	Reverse	ON	OFF	OFF	OFF			○	○				○			
N	Neutral	ON	OFF	ON	OFF	○										
D	1st	ON	OFF	OFF	OFF	●	●							●		●
	2nd	ON	ON	OFF	OFF	○	○					○		○		
	3rd	OFF	ON	OFF	OFF	○	○				○			○	○	
	4th	OFF	OFF	ON	OFF	○	○	○			○			○		
	5th	OFF	OFF	OFF	ON		○	○	○		○					
4	1st	ON	OFF	OFF	OFF	○	○							○		○
	2nd	ON	ON	OFF	OFF	○	○					○		○		
	3rd	OFF	ON	OFF	OFF	○	○				○			○	○	
	4th	OFF	OFF	ON	OFF	○	○	○			○			○		
3	1st	ON	OFF	OFF	OFF	○	○							○		○
	2nd	ON	ON	OFF	OFF	○	○					○		○		
	3rd	OFF	ON	ON	OFF	○	○			○	○			○	○	
2	1st	ON	OFF	ON	OFF	○	○							○		○
	2nd	ON	ON	OFF	OFF	○	○					○		○		
1	1st	ON	OFF	OFF	OFF	○	○						○	○		○

○ : Operating

Fig. 4-140

The Clutch Application Chart describes which of the holding devices (clutches and brakes) are applied in a given gear position. It also shows the ON/OFF position of the solenoids in each respective gear position.

The alphanumeric designation for each holding device is indicated at the top of the chart (i.e. S1, C1, B1, F1,etc).

S = Solenoid
C = Clutches
B = Brakes
F = One-way (freewheeling) Clutch

The shift lever and gear positions are listed on the left side of the chart. The information in this chart is used to assist during diagnose of a suspected mechanical failure in the transmission.

In addition to the Clutch Application Chart, the Automatic Transmission Repair Manual also includes a “Function of Components” planetary gear model and chart (shown for the A650E).

Function of Components

FUNCTION OF COMPONENTS

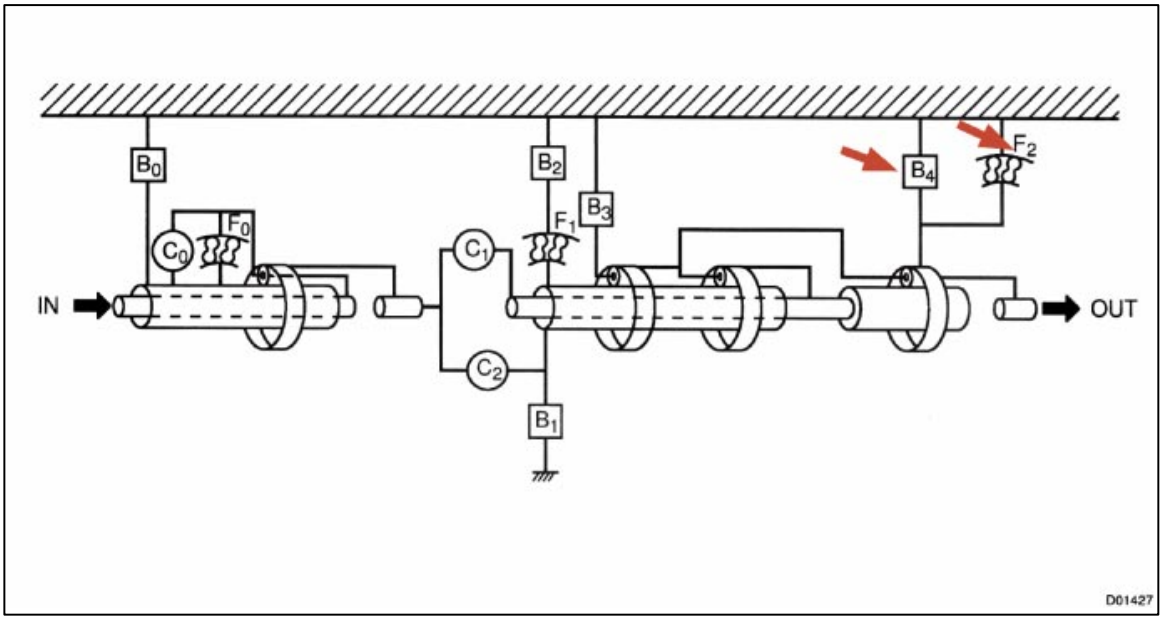

Component		Function
C_0	O/D Direct Clutch	Connects O/D sun gear & O/D planetary carrier.
C_1	Forward Clutch	Connects input shaft and rear planetary sun gear.
C_2	Direct Clutch	Connects input shaft and front & center planetary sun gear.
B_0	O/D Brake	Prevents O/D sun gear from turning either clockwise or counterclockwise.
B_1	3rd Coast Brake	Prevents front & center planetary sun gear from turning either clockwise or counterclockwise.
B_2	3rd Brake	Prevents outer race of F_1 from turning either clockwise or counterclockwise thus preventing the front & center planetary sun gear from turning counterclockwise.
B_3	2nd Brake	Prevents front planetary carrier from turning either clockwise or counterclockwise.
B_4	1st & Reverse Brake	Prevents rear planetary ring gear from turning either clockwise or counterclockwise.
F_0	O/D One-way Clutch	When the transmission is being driven by the engine, this clutch connects the O/D sun gear and O/D planetary carrier.
F_1	No.1 One-way Clutch	When B_2 is operating, this clutch prevents the front & center planetary sun gear from turning counterclockwise.
F_2	No.2 One-way Clutch	Prevents rear planetary ring gear from turning clockwise.

Fig. 4-141

When a transmission problem has been reported, pressure readings must be taken to determine hydraulic failure. Mechanical failure may be determined by following the general procedure outlined below.

For this example, the Repair Order indicates “no forward movement in Drive 1st gear.” (Reference the clutch application chart and function of component for an additional clarification)

1. First, verify the complaint by conducting a road test to determine the gear position where the failure occurs.
2. Second, reference the Clutch Application Chart and the “Function of Components” planetary gear model and chart for the transmission applicable to the vehicle being serviced.

NOTE

All charts and the gear model are found in A650 Automatic Transmission Repair Manual.

3. Check the Clutch Application Chart to determine which holding devices are engaged in the gear position where the problem was experienced during the road test. In this example, C0, C1, F0, and F2 are engaged in Drive 1st gear.
4. Find another gear position on the Clutch Application Chart that uses the same holding devices as is used in Drive 1st gear. In this example, C0, C1, F0, and F2 are all engaged in Low gear. Low also uses B4 (1st & Reverse Brake).
5. Now reference the “Function of Components” page of the A/T Repair Manual.

   Notice that the “planetary gear model” shows that B4 and F2 are parallel holding devices (as evidenced by their parallel lines both intersecting with the rear planetary ring gear). That is, the 1st & Reverse Brake (B4) and NO. 2 one-way clutch (F2) both hold the rear planetary ring gear. Note, however, that F2 only is applied in Drive 1st gear and both are applied in Low. This allows you to supply extra holding power to the rear planetary ring gear by selecting Low.

Notice also that the “chart” indicates (in the function column) that B4 “prevents the rear planetary ring gear from turning either clockwise or counter clockwise” and that F2 “prevents the rear planetary ring gear from turning clockwise.” So when the 1st & Reverse Brake (B4) is applied it holds the rear planetary ring gear from turning in either direction. Where as, the One-way Clutch NO. 2 (F2) only holds the rear planetary ring gear in the clockwise direction. The advantage the 1st & Reverse Brake (B4) has is that engine braking can be achieved to slow the vehicle on deceleration.

6. Drive the vehicle in Low gear position to determine if the One-way Clutch NO. 2 (F2) might be the holding device at fault. If the transmission accelerates in Low gear position and has engine braking during deceleration you can conclude that B4 is OK (because it holds in both directions). You can be fairly confident that F2 is the probable cause of the problem because by adding B4 to hold the same planetary component as F2, the vehicle did move.

E-Shift

The GS 400 is equipped with an E-Shift System that enables the driver to change shift position by operating shift switches located on the steering wheel.

E-Shift

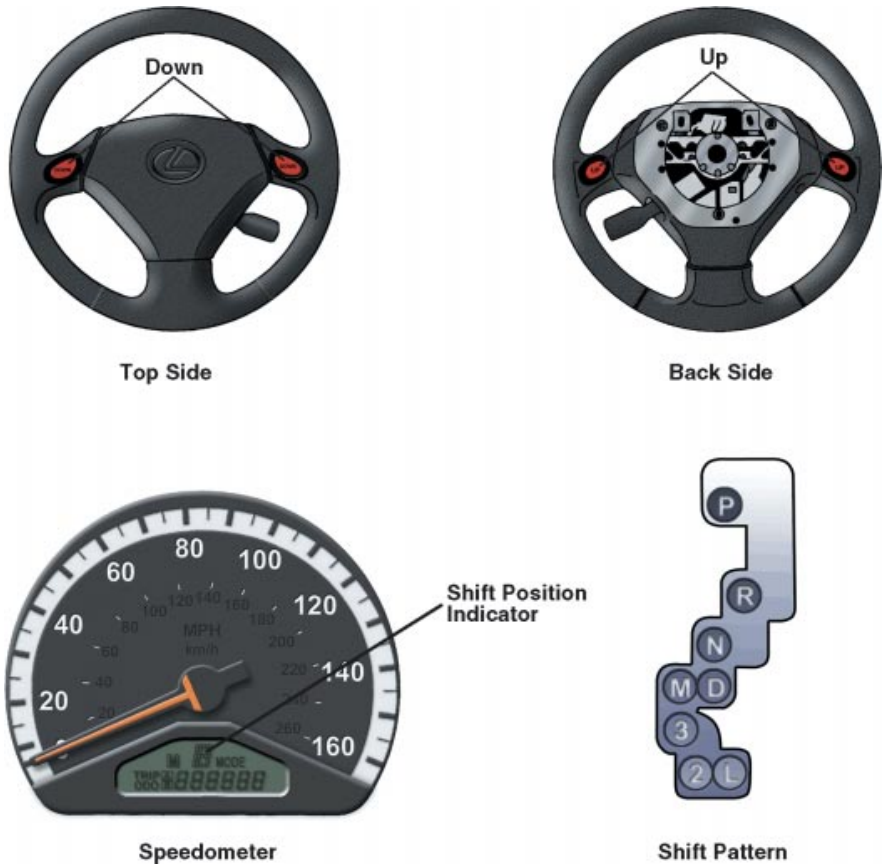

Fig. 4-142

By placing the shift lever in the “M” position, the driver can shift ranges by operating the transmission shift switches. The shift switches for downshifting are located on the topside of the steering wheel and the shift switches for up shifting are located on the back side of the steering wheel.

The maximum gear speed is limited in each of the ranges, permitting the gears to up-shift and downshift automatically within the respective allowable range. Additionally, the shift position indicator is displayed on the speedometer when the shift lever is engaged in the M position.

A343F

The A343F is a four speed automatic electronically controlled transmission. It includes overdrive fourth gear, dual shift programs and a lockup torque converter. It is used on the LX 470.

The torque converter clutch and planetary gear unit were redesigned (from the previous 343F installed in the LX 450 model) to accommodate the adoption of the 2UZ-FE engine and its increased power output. Specifically, the shape of the turbine blades in the torque converter clutch were redesigned to optimize performance and the rear planetary gears were strengthened by changing from a 4-pinion to a 5-pinion configuration.

A343F Automatic Transmission

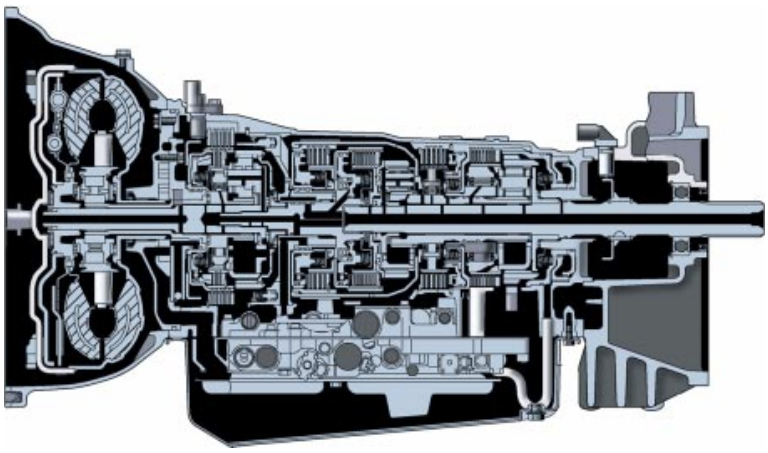

Fig. 4-143

Like the A650E transmission, in the A343F, mechanical control of line pressure using a throttle cable, cam, and throttle valve has been replaced by an electronic control system that uses a solenoid valve SLT.

Shift timing control is selected from three (power, normal, and 2nd start) shift patterns in the ECM using the pattern select switch. The optimum lock-up pattern is selected from three lock-up patterns in the ECM by the pattern select switch.

Line Pressure Control

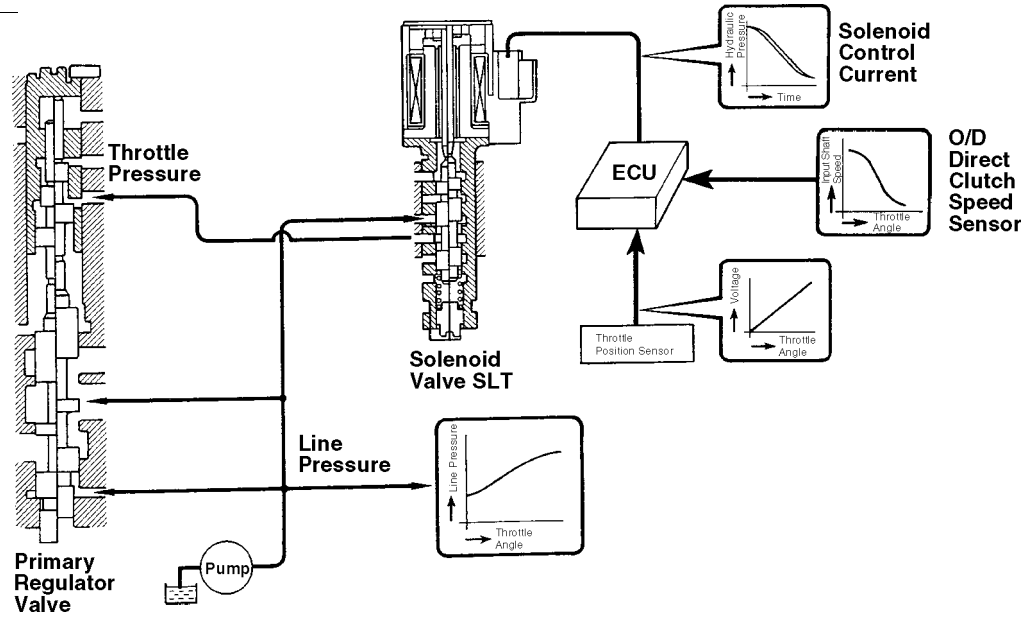

Fig. 4-144

Based upon the throttle-opening angle reported by the throttle position sensor VTA signal, the ECM activates solenoid valve SLT to regulate line pressure based upon engine output. This makes it possible for the primary regulatory valve to control line pressure to a precise degree and achieve smooth shift characteristics. The ECM does this by controlling current flow to the solenoid coil integrated in solenoid valve SLT.

SLT Solenoid

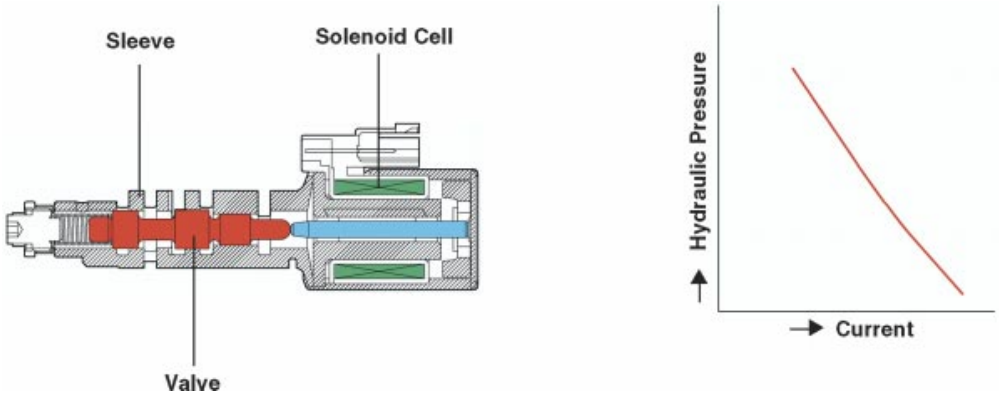

Fig. 4-145

The ECM also detects the speed of the transmission's input shaft to determine whether or not the transmission is shifting properly in order to ensure smooth engagement of the clutch.

An overdrive (O/D) direct clutch speed sensor is fitted to the transmission case to detect revolution of the transmission-input shaft. The sensor rotor is attached to the O/D direct clutch drum.

O/D Direct Clutch Speed Sensor

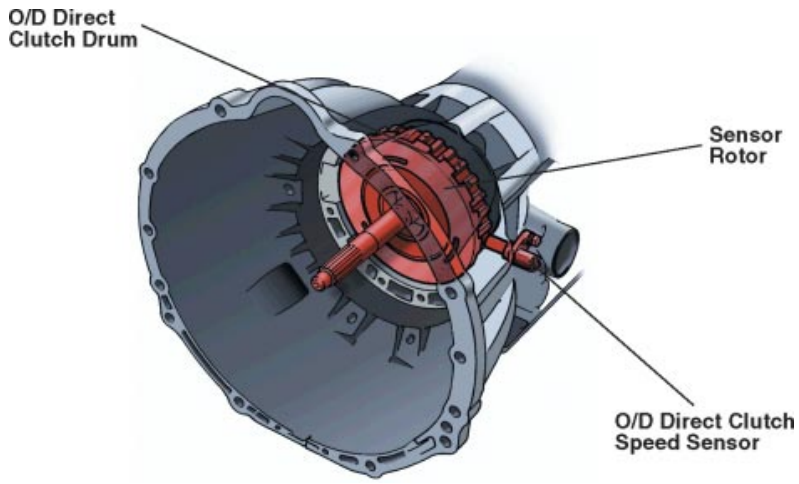

Fig. 4-146

When the vehicle is shifted from the "N" to "D" range, the transmission is temporarily shifted to OD and then to 1st to reduce vehicle squat. The ECM retards the engine ignition timing temporarily to control engine torque and improve shift feel during upshifting and downshifting operations. A 2nd Start System enables the vehicle to take off in 2nd gear on snowy, sandy, or muddy terrain.

The A343F has a malfunction indicator lamp to inform the driver of an electrical system malfunction and a fail-safe function permits continued operation in case of an electrical malfunction.

ATF D-II or DEXRON® III (DEXRON® II) transmission fluid type is recommended for this transmission.

U140 Transaxle

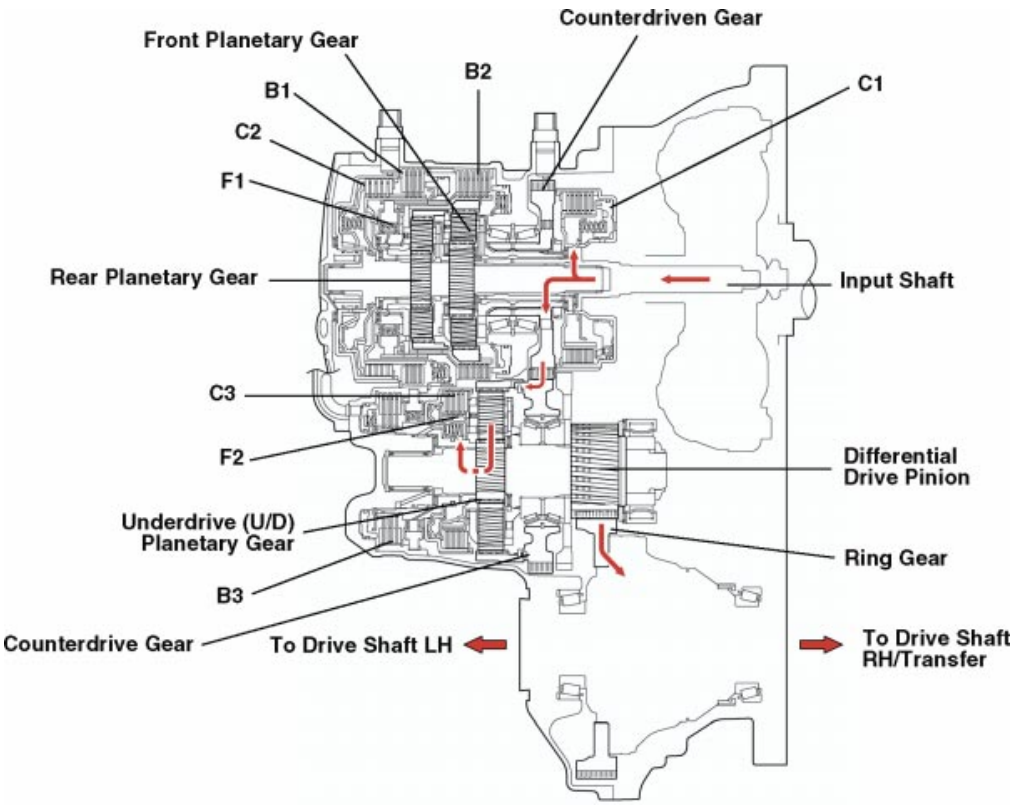

Fig. 4-147

U140E/F

The U140 series is a compact, lightweight, high capacity, four speed electronically controlled automatic transaxle. It is used on the ES 300 and the RX 300 vehicles. The U140E is available on 2-wheel drive vehicles (2WD) and the U140F is available on the 4-wheel drive (4WD) RX 300.

U140E/F Automatic Transaxle

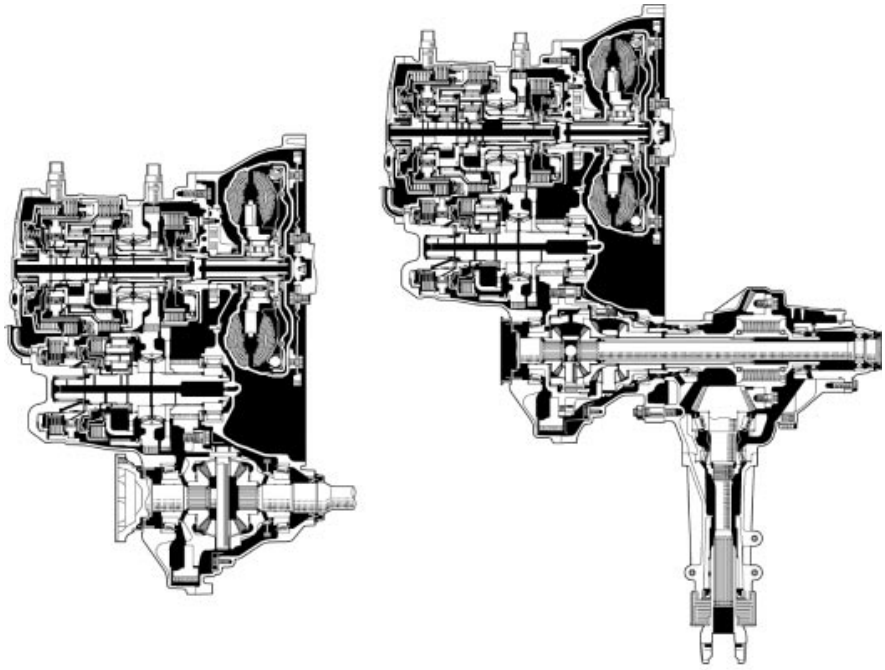

2WD U140E

4WD U140F

Fig. 4-148

A compact, highly efficient super flow torque converter has been developed to provide excellent torque from a stop, smooth acceleration performance, and fuel economy. Optimizing the shape of each vane in the torque converter attains the high torque conversion ratio and transmission efficiency of this transaxle.

Three speed front and rear planetary gears are placed on the input shaft. The counter drive and driven gears are in front of the front planetary gear. The under drive (U/D) planetary gear unit is placed above the counter shaft.

Two-Stage Valve Body

The valve body is of a two-stage construction, which is somewhat atypical from the multi-stage construction of a conventional valve body.

U140 Valve Body

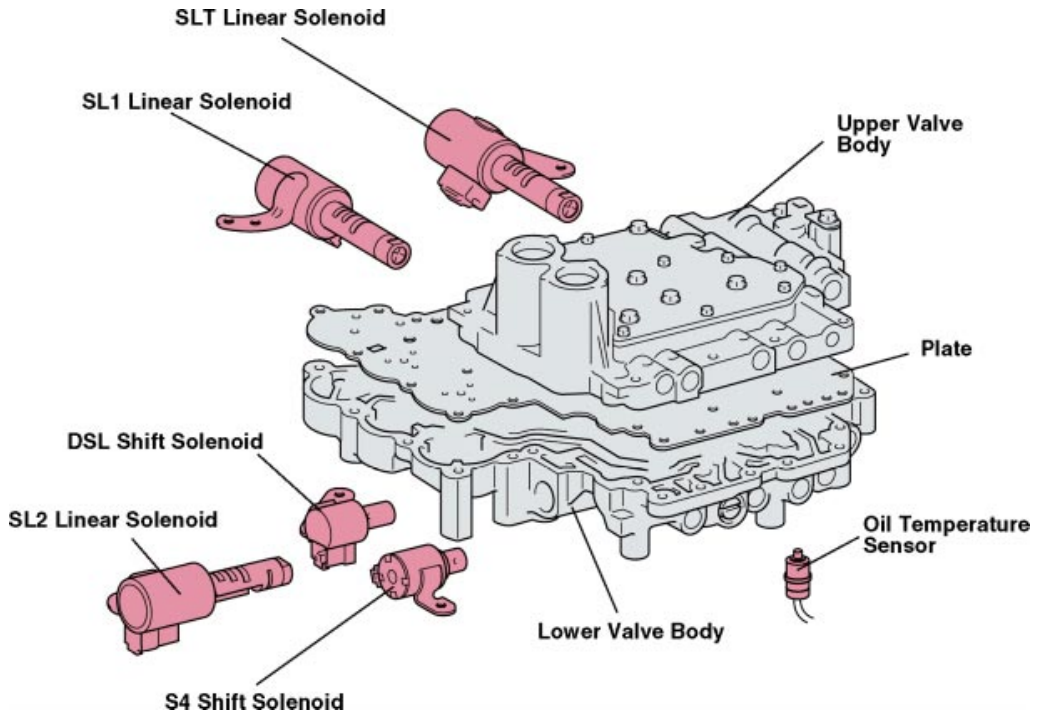

Fig. 4-149

The solenoid valves are installed in the lower valve body. The 1-2 and 2-3 shift valves and the gaskets above and below the valve body plate have been discontinued. These changes have reduced the number of parts to create a compact, lightweight, and very rigid construction.

ATF Type T-IV or equivalent transmission fluid type is recommended for this transmission.

Automatic Transmission - PDS

The Pre-Delivery Service requires you to check the automatic transmission fluid, check for A/T diagnostic codes, and road test the vehicle to ensure proper automatic transmission operation. Be sure to follow the PDS Manual procedures for these two important inspections. Listed below are a few items to be sure you cover while performing these aspects of the PDS.

A/T Fluid Check

Ensure the proper level of the fluid. Proper fluid levels ensure the proper operation of the holding devices, the torque converter, and the lubrication of the transmission.

A low fluid level causes delayed engagement in both drive and reverse and slipping when upshifting. Slipping cause overheating and rapid wear of the clutches and brakes.

When fluid level is too low, the oil pump may draw air, causing it to mix with the fluid. Fluid may shift under heavy deceleration exposing the oil pickup to air and resulting in a lack of oil volume to disengage the lockup converter clutch.

If fluid level is high, the planetary gears and other rotating components agitate the fluid, aerating it and causing similar symptoms. Aerated fluid combined with overheating can cause the fluid to oxidize and cause varnishing of components. Varnish interferes with the normal valve, clutch, and accumulator operation. Aerated fluid will rise in the transmission case and leak from the breather plug at the top of the transmission housing or dipstick tube.

1. Fluid level should be inspected when the vehicle is running and the fluid level has been warmed to normal operating temperatures (158°F to 176°F).

   HINT

   It may take 10 or 15 minutes of driving to reach normal operating temperature. As a rule of thumb, if the graduated end of the dipstick is too hot to hold, the fluid is at operating temperature.

2. Proper fluid level is checked in the “hot” range (between the maximum and minimum range shown on the dipstick). The cool range on the dip stick is only used as a reference when the transmission is cold to ensure adequate lubrication while the fluid is brought up to temperature.

3. Inspection of the fluid should be performed by placing a sample of the fluid on a white paper towel. If any of the following conditions are found, write it on the Repair Order.
   a. residue of flaky particles of metal or friction material
   b. heavy varnished fluid which is no longer clear and is tacky
   c. milky appearing fluid caused by engine coolant entering the transmission.
   d. foamy fluid caused by either a low or high fluid level, an air leak on the suction side of the pump, or improper installation/ crimping of the oil filter gasket.

A/T Check for Diagnostic Codes

Note any automatic transmission codes detected on the Repair Order.

Road Test

The road test provides an opportunity to experience the transmissions operational characteristics through each selector range, as well as, during forced and manual downshifts.

a. Check for engine flare or clutch slippage.
b. Check for smooth upshifts and downshifts.
c. Check for engine braking (the effect will be strongest in L and 2nd).

Active Height Control (AHC) & Adaptive Variable Suspension (AVS)

The Active Height Control Suspension and Adaptive Variable Suspension Systems provide significant ride comfort through the integration of a vehicle height adjustment system and a damping force control system.

Active Height Control (AHC)

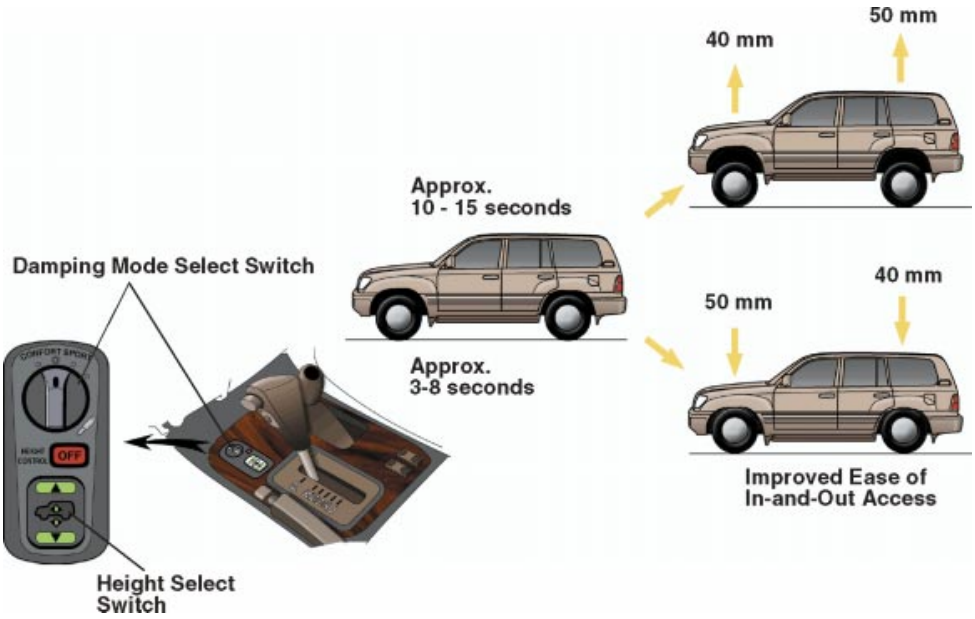

Fig. 4-150

Active Height Control (AHC) allows the driver to adjust the vehicle ride height to three levels - high, normal and low. The high mode provides a smoother ride over rough terrain, while the low mode can provide easier occupant in and out access from the vehicle at the touch of a switch. The height control switch and indicator light work to help to keep the driver informed of the current vehicle height, as well as to indicate the optimal height control based upon driving conditions. The system ensures constant stable ride comfort and vehicle height regardless of load conditions such as the number of occupants or the weight of the cargo.

NOTE

Occasionally the set vehicle height may not be maintained when the load is heavier than the prescribed amount (1300 lbs. in normal mode; 1000 lbs. in high). It may not be possible to raise the vehicle height with the switch at all.

If set in the high mode, the AHC will automatically lower the vehicle to normal mode when the vehicle exceeds 18.6 mph.

Adaptive Variable Suspension (AVS)

Improved Vehicle Posture During Steering

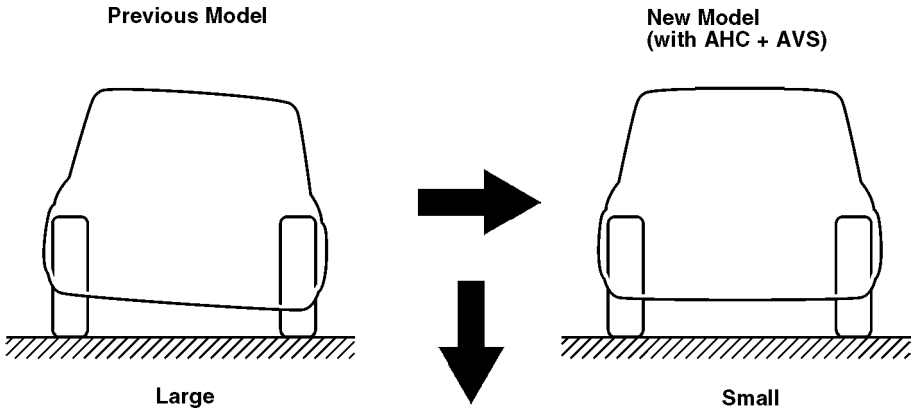

Fig. 4-151

The Adaptive Variable Suspension (AVS), a semi-active shock absorber system, can react as fast as 2.5 milliseconds, continuously changing shock absorber damping effect individually at each wheel. The computer system selects from a range of 64 different settings, from softest to most firm, depending on feedback from various road sensors. The AVS system senses road bumps, steering wheel activity, braking and acceleration and can momentarily adjust shocks to a stiffer value as needed for a more stable ride or soften to absorb a bump. The driver is provided an adjustment switch to select a range of personal preferences.

Vehicle Height Control

Vehicle Height Selection

The following three levels of vehicle height can be selected by operating the switch.

Height Selection Function

Switch Position		Lo	N	Hi
Vehicle Height	Front	Approximately -2.0 in (-50mm)	Standard Vehicle Height	Approximately +1.6 in (+40mm)
	Rear	Approximately -1.6 in (-40mm)	Standard Vehicle Height	Approximately +2.0 in (+50mm)
Vehicle Height Adjustment Speed	Up	Lo to N or N to Hi Approximately 10 to 15 Seconds (Main Accumulator in the Stored State)		
	Down	Hi to N or N to Lo Approximately 3 to 8 Seconds		

Fig. 4-152

Low position lowers the front of the vehicle by 2 inches and the rear by 1.6 inches in approximately 3 to 8 seconds.

Normal position maintains the vehicle at a standard vehicle height both in the front and rear.

High Position raises the front of the vehicle 1.6 inches and the rear 2 inches in approximately 10 to 15 seconds.

Automatic Leveling Function

This function maintains the vehicle height in a constant state regardless of the load number of occupants or the weight of the cargo under the prescribed loading conditions. It effects constant control so that the vehicle height is maintained at a prescribed value when the normal vehicle height is selected.

Speed Sensing Function

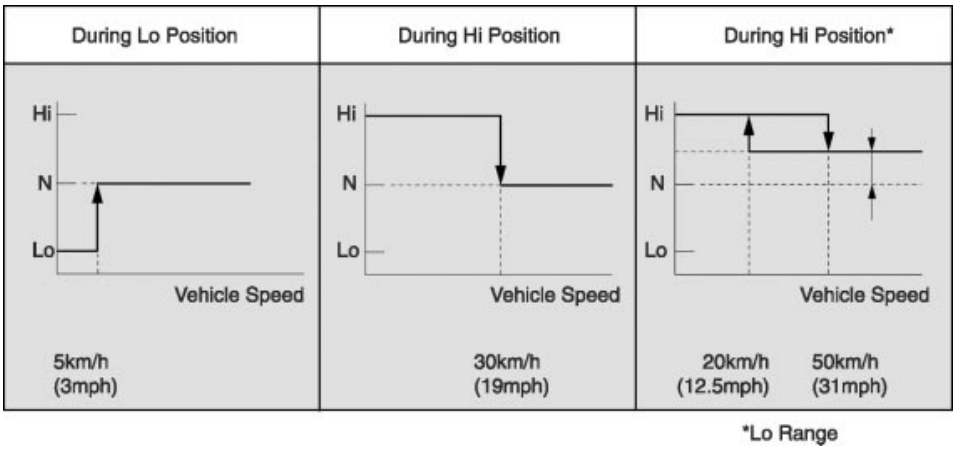

Fig. 4-153

Vehicle Speed Sensing Function

This function automatically adjusts the vehicle height in accordance with the vehicle speed in order to ensure stability and ride comfort while driving.

In the Low position, if the vehicle speed exceeds 3 mph, the vehicle height resets to normal vehicle height and is maintained there.

In the High position, if the vehicle speed exceeds 19 mph, the vehicle height resets to normal vehicle height and is maintained there.

In the High position (with the transfer case in low), when the vehicle speed exceeds 31 mph, the vehicle height will lower to 1 inch above the normal range and will return to the high range when the speed drops below 12.5 mph.

Extra High Mode

When driving on an unpaved road with the transfer in low range and the vehicle height set to high, if one of the wheels begins to freewheel, the vehicle height automatically raises 1.2 inches in the front and .8 inch in the rear.

Vehicle Height Adjustment Prohibition Control

When the vehicle is raised on a jack or being towed, vehicle height adjustment can be prohibited by setting the height control switch to the OFF position. The prohibition control cancels automatically when set at normal vehicle height and the vehicle speed exceeds 50 mph, or when set at low vehicle height and the vehicle speed exceeds 19 mph.

Vehicle Suspension Control (Damping Force Control)

Float and Pitch Control (Skyhook Control)

The “Skyhook Theory” is a theory that renders an ideal condition of a vehicle in which only the wheels move up and down when bumpy road conditions are transmitted to the vehicle body, while the body remains suspended in space via the shock absorbers.

Based upon this theory, the absorber control ECU performs front and rear wheel control of the damping force for each of the shock absorbers independently.

The suspension control ECU calculates the relative speed between the body and the wheels based on input signals received and performs a semi-active control of the shock absorbers’ damping force to maintain a smooth stable ride under various road conditions.

NOTE

Semi Active Control is based on “sprung mass” and the direction of shock absorber movement in relation to it. It determines the conditions that require varying damping force of the shock absorbers in a direction that assists the vehicles’ body movement over rough terrain. The explanation of this system will be more fully explained in another course (see your instructor).

Thumping Sensitive Control

When the road surface condition does not require a damping force, this function controls the shock absorbers so that their damping force will not increase.

Unsprung Vibration Control

If unsprung resonance is detected, this function controls so that the damping force will not decrease below a certain level to reduce unsprung resonance.

Speed Sensitive Control

This function provides a variable range of the damping force. To optimally balance ride comfort and stability during high-speed driving, the damping force is increased based on the increase in the speed of the vehicle. The damping force is controlled at a softer variable range at low speeds, and at a firmer variable range at high speeds.

Anti-Roll Control

During cornering, this function makes the damping forces firmer, thus restraining the body roll and providing stability and control.

Anti-Dive Control

During braking, this function makes the damping force firmer to restrain body dive.

Anti-Squat Control

During acceleration, this function makes the damping force firmer to minimize the changes in the vehicle's profile when accelerating.

Damping Force Control

The actuator (controller) uses a 16-step motor to generate a continually variable damping force. This provides a wide range of variation to effect a smooth transition and accommodated the constantly changing driving conditions.

Right-Left Wheel Communicating Function

This function restrains body roll during cornering to ensure control and stability. An open oil passage between the right and left shock absorbers allows the suspension to move up and down smoothly when the right and left wheels move in opposite directions relative to the road surface on a turn. The oil passage gradually closes based upon steering position sensor inputs as the driver turns the steering wheel. It also provides excellent road-holding performance when driving on a winding road.

AHC Switches & Indicator Lights

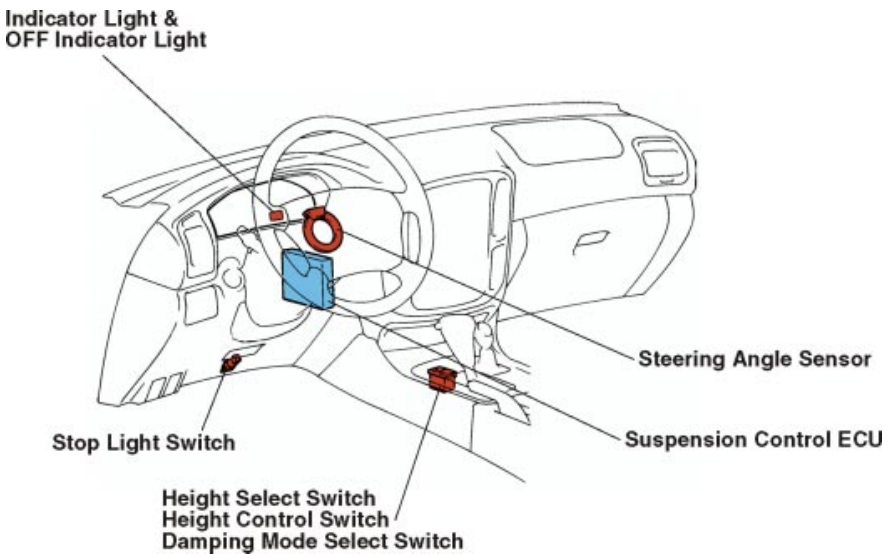

Fig. 4-154

Components of the System & Their Function

Lights

Height Control Indicator Lights have been provided and are located below the tachometer in the combination meter. There is a light for each selection of the height select switch. A light illuminates indicating the current vehicle height setting.

A Height Control OFF Indicator Light is located just below the aforementioned indicator lights, however it is used in three different applications.

- It serves as an OFF indicator light to inform the driver that the Height Control Switch is in the OFF position.
- It functions as a warning light by blinking to alert the driver that the ECU has detected a malfunction in the system.
- It provides Diagnostic Trouble Codes when accessed using the Lexus Diagnostic Tester.

Control Switches

The Height Select Switch, Height Control Switch, and Damping Mode Switch are all are located at the front of center console in front of the shift lever.

The Height Select Switch is a momentary switch. It is used for selecting the desired height adjustment. Pressing the up side of the switch, raises vehicle height. Pressing the down side of the switch, lowers the vehicle height.

NOTE

Pressing the Height Control Switch prohibits the height control function. Pressing it again, cancels the prohibition.

The prohibition cancels automatically when the vehicle speed exceeds 50 mph at normal vehicle height, or 19 mph at other vehicle height settings. The state of the height control prohibition is stored in memory even after the ignition switch has been tuned OFF.

The Damping Mode Select Switch enables the driver to select a desired damping force from four modes.

Steering Angle Sensor

The steering angle sensor is fitted to the turn signal switch assembly and is used to detect steering direction and angle. The sensor contains 2 photo interrupters and a slotted disc. The disc interrupts a light beam to turn the phototransistor ON and OFF indicating steering direction and angle.

AHC Components

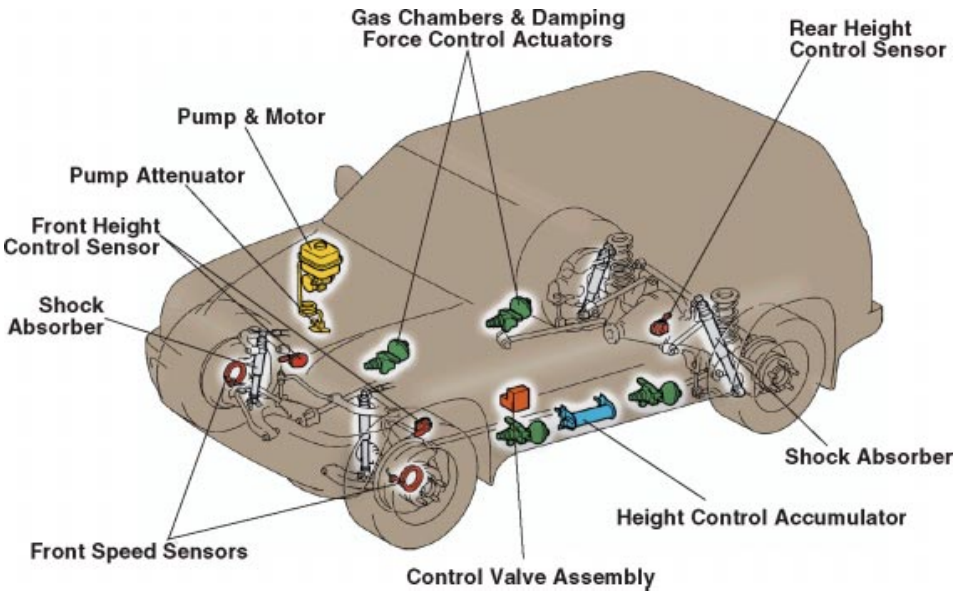

Fig. 4-155

Height Control Sensors

Three sliding resistance-type Height Control Sensors (brush and resistor potentiometers) are provided to vary voltage. One in each of the right and left front wheel housings, and one in the center of the cross member located above the rear axle.

Height Control Sensor

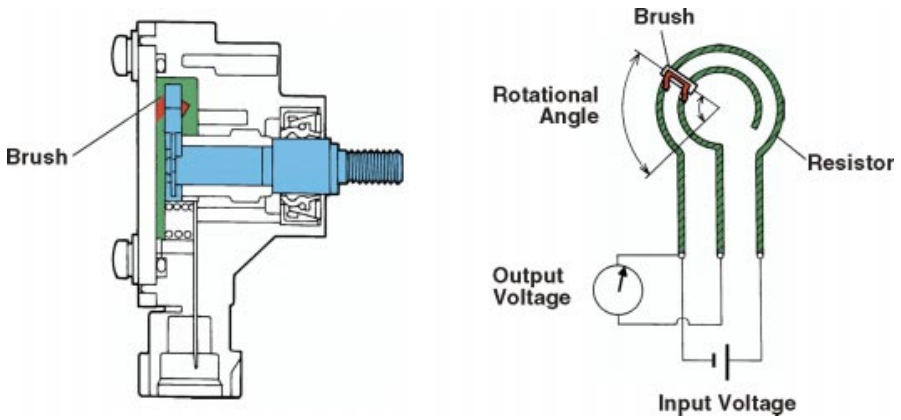

Fig. 4-156

The sensor consists of a brush that is integrated with a shaft, which slides on a resistor formed on a substrate (medium/base). A fixed amount of voltage (5V) is applied to the resistor of terminal SHB. Because the resistance value between the brush and terminal SHB varies in proportion to the shaft's rotational angle, the change in suspension height is transmitted in the form of an analog voltage signal.

Pump Attenuator

The Pump Attenuator dampens the hydraulic pulsation of the fluid that is discharged by the pump. It is a Nitrogen gas filled stainless steel bellows-type accumulator with a gas chamber volume of 0.12 cu in and a sealed gas pressure reading of 284 psi.

Pump & Pump Motor

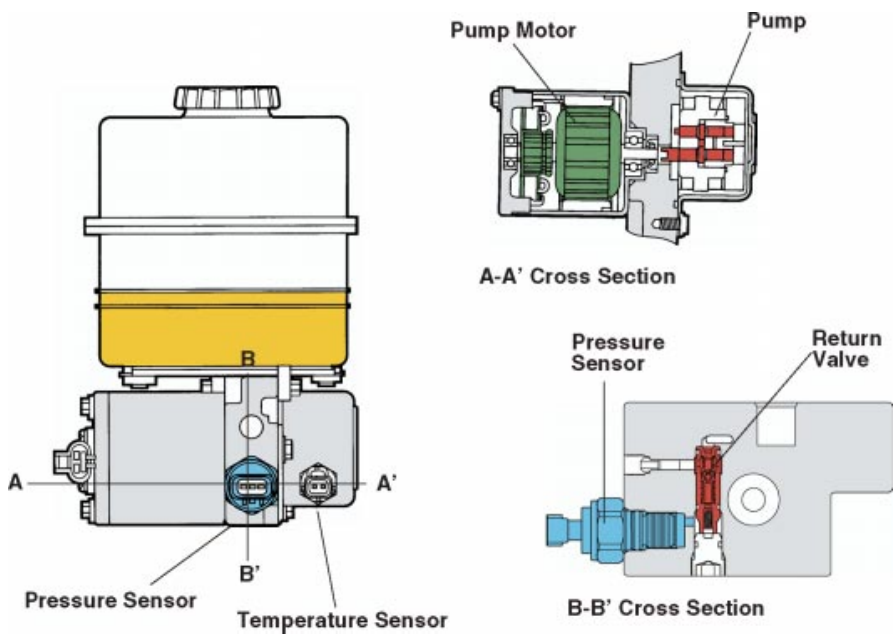

Fig. 4-157

Pump and Motor

The pump, pump motor, reservoir tank, return valve, pressure sensor, and temperature sensor are integrated into one assembly.

- The pump and motor generate the hydraulic pressure that is necessary to raise the vehicle. The pump is an external gear pump. It is a pressure-loading type in which internal pressure is used to push on the pump gear to reduce internal leakage. This configuration makes high-pressure discharge possible. The motor is a DC motor with 4-pole brushes.
- The reservoir tank maintains the amount of fluid returned at low vehicle height and the fluid discharged at high vehicle height.

- The return valve opens and closes the oil passage between the control valve assembly and the reservoir tank.
- The pressure sensor detects pump discharge pressure.
- The temperature sensor detects fluid temperature.

AHC fluid Part Number: 08886-01805 (2.5 liters).

The Return Valve

The return valve opens and closes the oil passage between the control valve assembly and the reservoir tank.

Under normal conditions, spring force is applied to the return valve to maintain an open oil passage between the control valve assembly and the reservoir tank.

However, the return valve uses the flow of oil discharged from the pump to close the valve. The pressure discharged by the pump as it raises the vehicle height, causes the return valve to move, this closes the oil passage between the control valve assembly and the reservoir tank, and redirects the fluid to the control valve assembly.

Height Control Accumulator

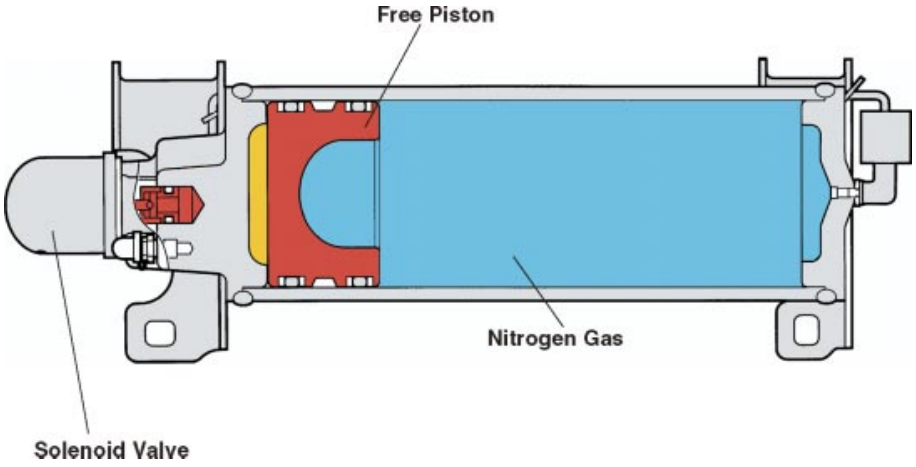

Fig. 4-158

The Height Control Accumulator

The Height Control Accumulator is a free piston type. It consists of a cylinder (with a 945 c.c. Nitrogen gas chamber pressurized to 853 psi), a free piston, and a solenoid valve. Under normal conditions, the solenoid valve remains closed. However, when the vehicle height is being raised or fluid is being stored in the main accumulator, the Suspension Control ECU sends a signal for the solenoid valve to open.

Control Valve

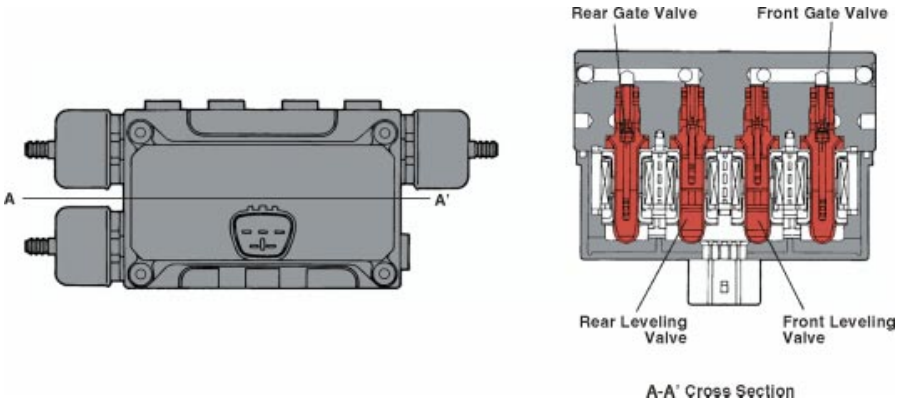

Fig. 4-159

Control Valve Assembly

The Control Valve Assembly consists of leveling valves, for adjusting the vehicle height, and gate valves used to control right-left wheel communication. There are two valves for the front and two valves for the rear.

Leveling & Gate Valves

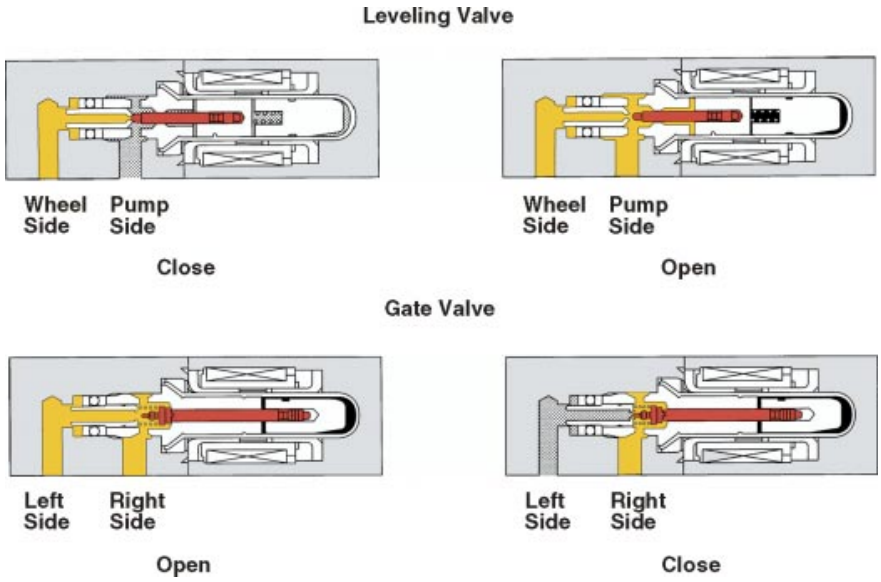

Fig. 4-160

Leveling Valves & Gate Valves

Leveling valves open and close the oil passage between the pump and the gas chambers at each of the wheels. Normally, the oil passage is in the closed position. However, during vehicle height control, the oil passage opens based upon a signal from the Suspension Control ECU.

Gate valves open and close the oil passage between the right and left shock absorbers. Normally, the oil passage is in the open position, connecting the right and left shock absorbers. When the Suspension Control ECU determines that the oil passage between the right and left shock absorbers must be closed, the gate valve activates to close the oil passage.

Actuator Assembly

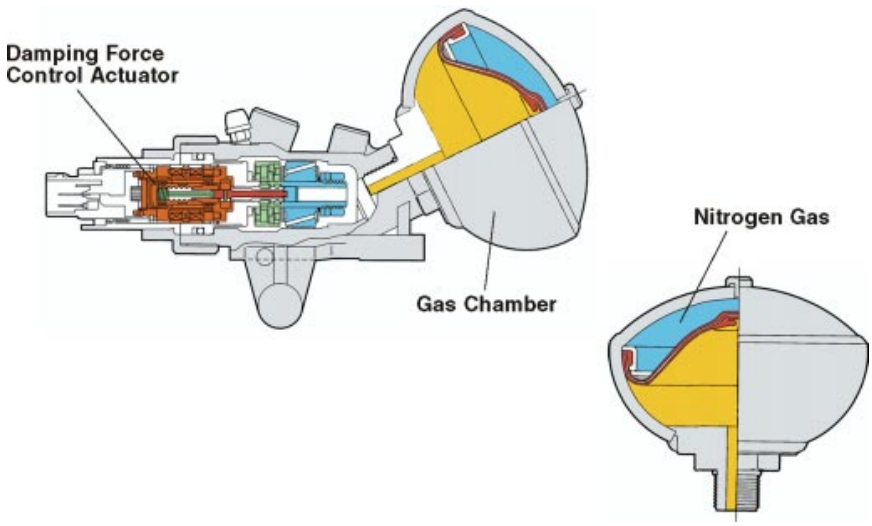

Fig. 4-161

Gas Chamber and Damping Force Control Actuator

The gas chamber and an actuator, used to control damping force, have been integrated into one unit. The gas chamber is a substitute for the gas chamber in a conventional shock absorber. It uses a bladder-type hydro pneumatic accumulator. A resin membrane is sandwiched between rubber layers to provide resistance to puncture and penetration. Nitrogen gas inside the chamber is varied allowing fluid to flow in and out and raise and lower the vehicle height. The housing has heat-dissipating fins that are used to dissipate the heat generated by the actuator.

Damping Force Control Actuator

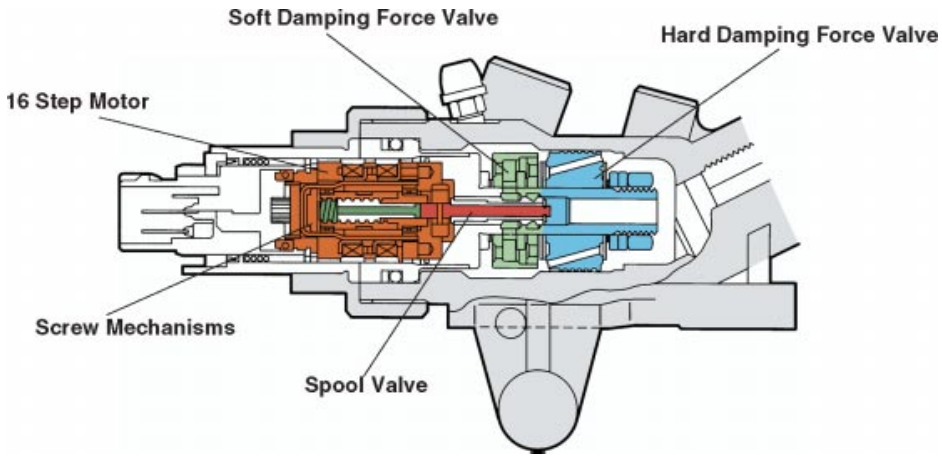

Fig. 4-162

The Damping Force Control Actuator

The Damping Force Control Actuator is comprised of a 16 step motor, a screw mechanism (which converts rotational movement to linear movement), a spool valve, a soft damping force valve, and a hard damping force valve.

Damping Force Control

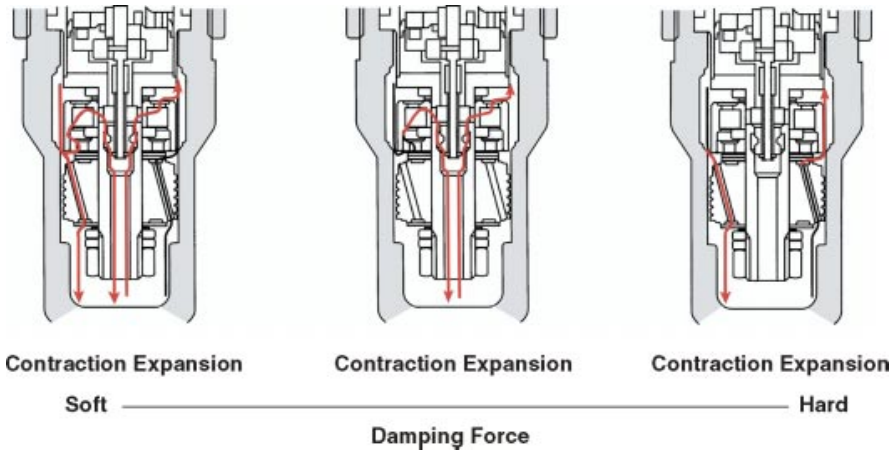

Fig. 4-163

Signals from the Suspension Control ECU activate the actuator causing the spool valve to switch the oil passage. Thus, the volume of oil that passes through each valve to control damping force is varied and controlled in 16 steps.

Shock Absorber

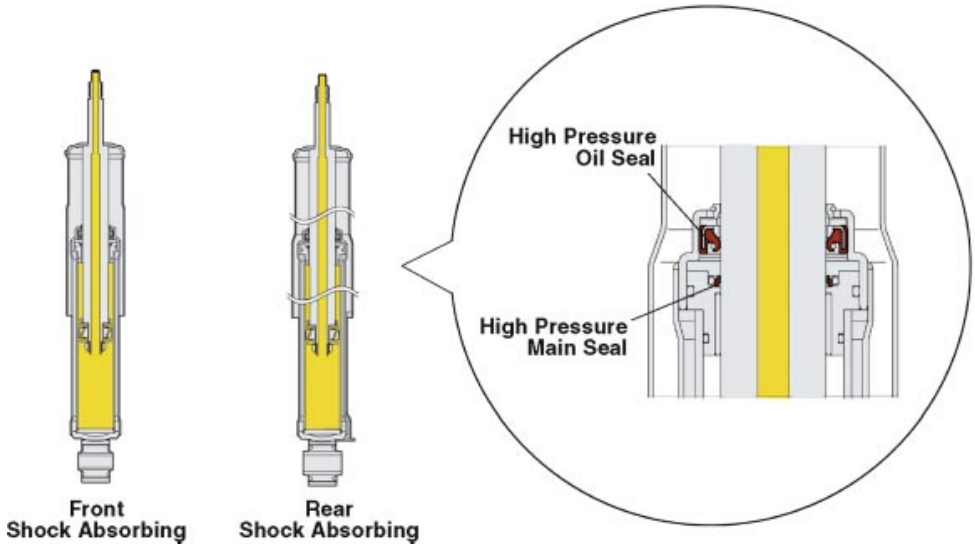

Fig. 4-164

Shock Absorber

The shock absorber is of dual construction using a high-pressure main seal made of fluoroethylene resin and high-pressure oil seal made of nitrile rubber. A back-up ring is provided to ensure sealing and reduce friction.

Suspension Control ECU

The Suspension Control ECU is located in the driver's side instrument panel. Based upon signals received from the sensors and switches, it detects vehicle height and road conditions and outputs control signals to the actuators (controllers) and pump accordingly. When a malfunction in the system is detected, the Suspension Control ECU activates the Height Control OFF Indicator Light to flash and alert the driver of the malfunction. The ECU stores the codes of the malfunction in memory which can be retrieved using the Lexus Diagnostic Tester. The Diagnostic Tester can change height and activate control valves and switches using Active Test Mode.

Diagnostic Trouble Codes may also be accessed by jumping terminals TC and E1 at DLC 1. Using this method you can check the operation of sensors and switches and adjust the damping force.

Normal Driving - (Straight Line)

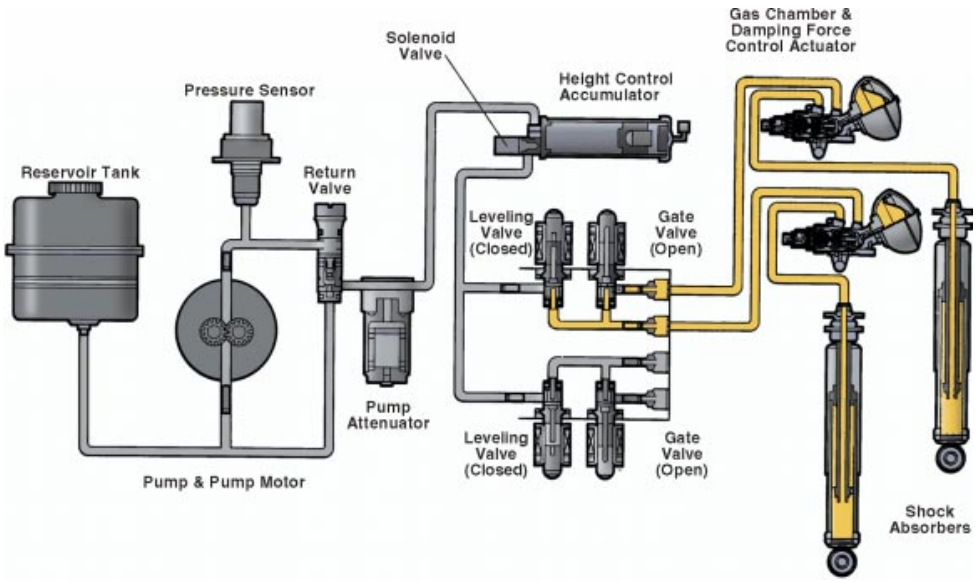

Fig. 4-165

System Operation

Normal Driving (Straight Line)

During Normal Straight Line Driving the leveling valve shuts OFF, isolating high pressure in the gas chamber and shock absorber. The gate valve remains open. The right and left shock absorbers remain connected. The ECU controls the damping force based upon the road conditions.

Cornering

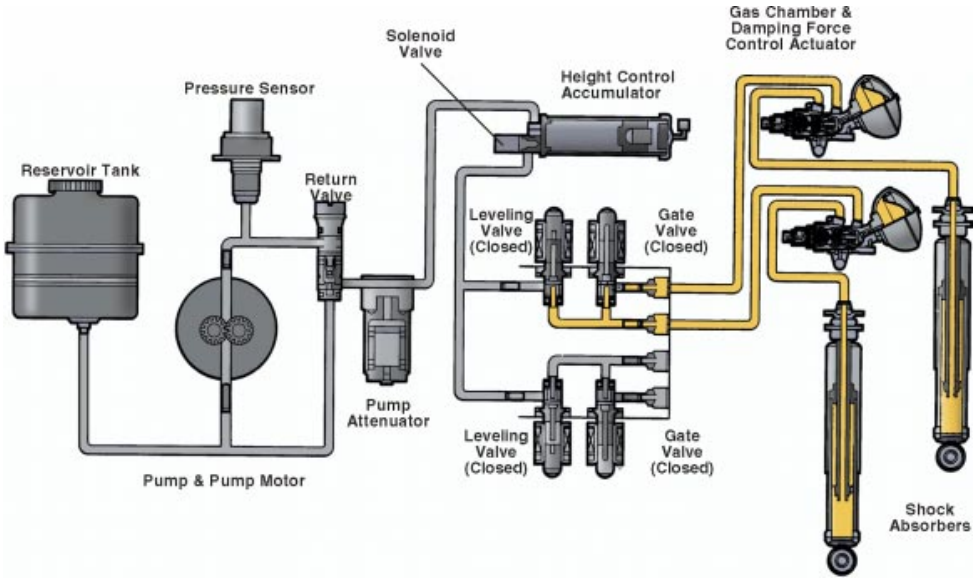

Fig. 4-166

Cornering

When the vehicle is cornering, the leveling valve remains OFF. The gate valve closes isolating the right and left shock absorbers from each other and the ECU continues to control the damping force based upon the road conditions.

Raising Vehicle Height

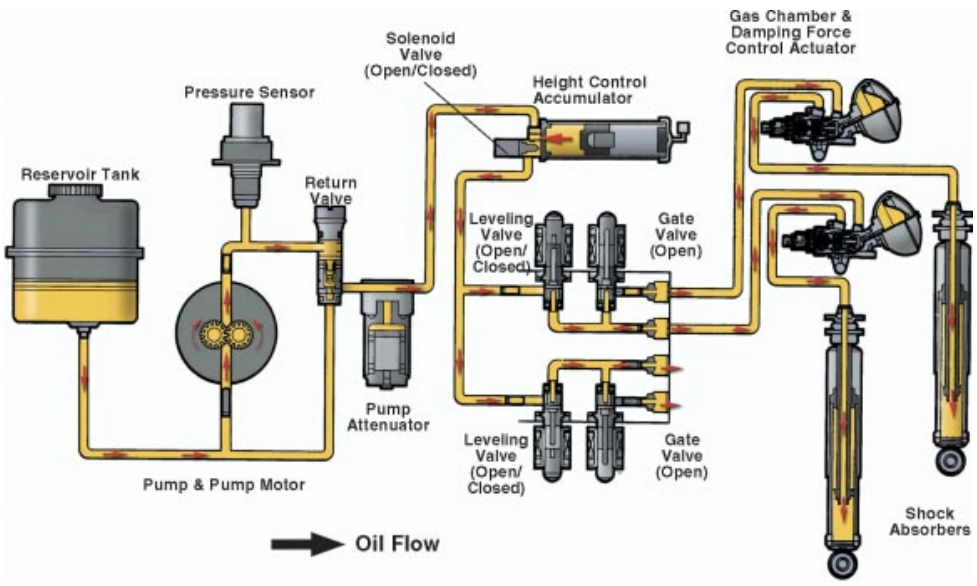

Fig. 4-167

Raising the Vehicle Height

The Height Select Switch activates the pump motor to rotate the pump. The fluid that is discharged from the pump is sent to the gas chambers and shock absorbers to raise the vehicle height.

Let's look at two different conditions, the vehicle stopped and the vehicle in motion.

When the vehicle is stopped, the Height Control Accumulator Solenoid Valve is opened to use the stored fluid to accelerate the raising speed of the vehicle height. The front and rear leveling valves open simultaneously to raise all four shock absorbers at the same time.

NOTE

When the stored fluid is depleted, the front and rear leveling valves are opened alternately to raise the front and rear shocks alternately.

When the vehicle is in motion, but below 16 mph, operation of the system is the same as in the stopped condition.

When the vehicle speed exceeds 16 mph, the vehicle height is raised using only the fluid that is discharged from the pump (not using the Height Control Accumulator). At this time, the front and rear leveling valves are opened alternately to raise the suspension of the front and rear wheels alternately.

If the vehicle height is low and the vehicle speed exceeds 3 mph, the fluid from the Height Control Accumulator is used and the vehicle is automatically raised to normal height

Storing Fluid in the Accumulator

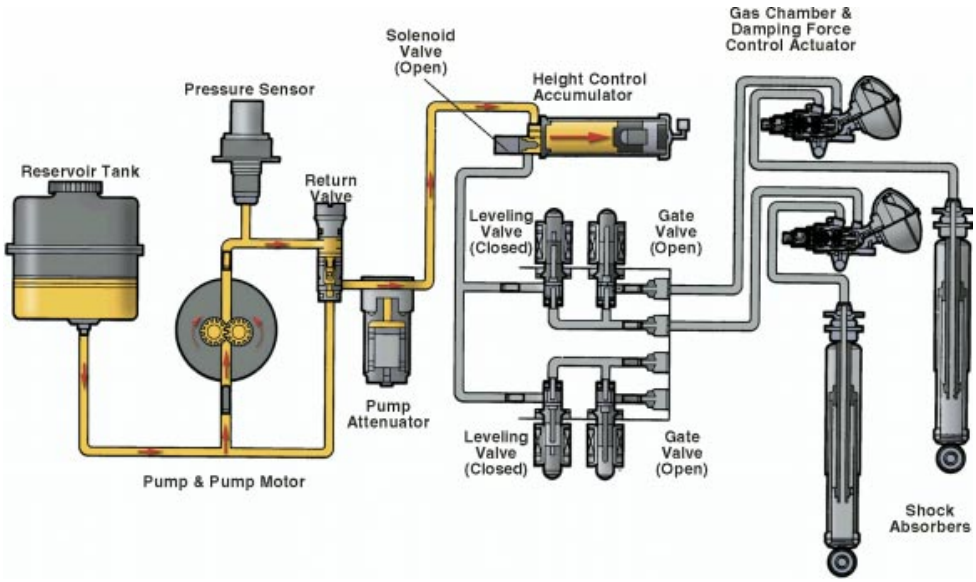

Fig. 4-168

Fluid Stored in the Height Control Accumulator

Normally, the Height Control Accumulator only stores the amount of fluid equivalent to the amount necessary to raise the vehicle height once. If the vehicle has been raised from low to normal and/or from normal to high, the accumulator may become low. At this time, the pump motor is activated, the leveling valves are closed, the solenoid valve of the Height Control Accumulator is opened, and fluid is restored to the accumulator.

If an attempt is made to raise the vehicle height prior to the accumulator reaching prescribed pressure specifications, only the fluid discharged from the pump will be used to raise the vehicle.

Lowering the Vehicle Height

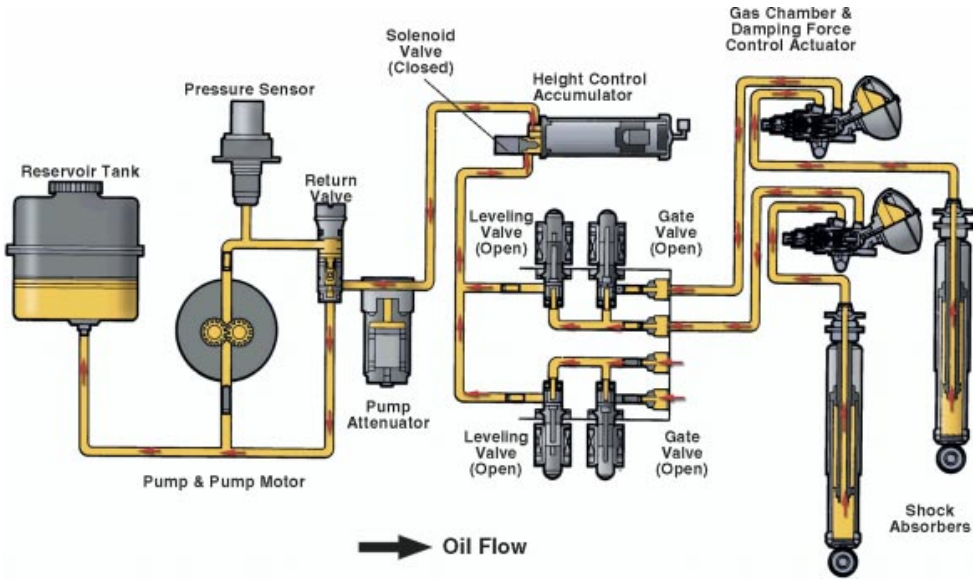

Fig. 4-169

Lowering the Vehicle Height

If the vehicle speed is under 3 mph when the height select switch is engaged to lower the vehicle height, the front and rear leveling valves open simultaneously to allow the fluid in the gas chambers and shock absorbers at all four wheels to return to the reservoir tank. This causes the suspension to lower all four wheels at the same time.

If the rear of the vehicle lowers more quickly due to load conditions, and the difference between the lowering of the front and rear is greater than prescribed specifications, the rear leveling valve closes causing only the front to lower. This feature prevents the headlights from aiming up.

When the height select switch is operated to lower the vehicle height from high to normal, the front and rear leveling valves are opened alternately to lower the suspension of the front wheels and rear wheels alternately.

If the vehicle speed exceeds 3 mph, the vehicle height cannot be lowered from normal to low.

Service Hints

1. The AHC should be OFF when the vehicle is raised.
2. The AHC should be set to normal and then switched to the OFF position when towed.

NOTE

Even with the AHC OFF, the suspension will return to normal if towed over 18 mph.

3. The AHC will not operate under the following conditions:
   a. Fluid is below -22°F.
   b. The Steering wheel is turned more then 3/4 turn abruptly with the center differential in the lock position.
4. The level may drop if the vehicle is parked (key OFF) after off-road use or when parked for extended periods of time.
5. Lower the vehicle, then raise to the normal position and wait 30 seconds to perform a fluid check.
6. Height Sensors adjustment with the Diagnostic Tester.
   a. Measure and adjust the vehicle height first.
   b. Adjust the sensor to the specifications.

Height Sensors adjustment without the Diagnostic Tester.

a. Measure and adjust the vehicle height first.

b. Connect three 1-1/2 V batteries to the sensor and adjust to the specified voltage.

Anti-Lock Brake (ABS), Traction Control (TRAC), & Vehicle Skid Control (VSC) Systems

Anti-Lock Brakes (ABS) - System Operation

ABS is a safety feature that prevents the wheels of a vehicle from locking up in the event of panic braking or on slippery surface conditions when friction is reduced between the road surface and the vehicle's tires.

Ordinary brakes work to slow down or stop a vehicle by using two types of resistance. The resistance between the brake pads and discs (or brake shoes and drums) and the resistance between the tires and the road surface.

If the brake system resistance is less than the resistance between the tires and the road, braking can be controlled in a stable manner. However, if the brake system resistance is greater than the resistance between the tires and the road surface, the tires will lock up and the vehicle will begin skidding.

If the front wheels lock up, steering is compromised (directional stability is lost). If the rear wheels lock up, the differences in the coefficients of friction should be between the left and right sides on the road surface. This will cause a spin to occur.

NOTE

Coefficient of Friction (μ) is a number expressing an object's resistance to sliding; the higher the coefficient, the higher the resistance. A good example of the relationship between the coefficient of friction and resistance is during a condition known as brake fade. Brake fade may occur when the brakes of a vehicle are applied constantly (without engine braking) on a long downhill slope. The brake lining and pads become extremely hot due to friction. The coefficient of friction decreases as a result and the brakes exert less stopping power even if the brake pedal is depressed with a great effort.

ABS accurately controls the hydraulic pressure acting on the wheel cylinders to prevent the wheels from locking up when the brakes are applied on a slippery surface or during panic braking. ABS also maintains directional stability during braking so the vehicle can be steered.

Basic Principles

When a vehicle is driven at a constant speed, the speed of the vehicle and that of the wheels are the same (wheels rolling, not skidding). However, when the brake pedal is applied, the speed of the wheels gradually decreases and no longer matches the speed of the vehicle that is now traveling along under its own inertia. At this point, a small amount of slippage may occur between the tires and the road surface. The difference in the ratio between the vehicle's speed and the speed of the wheels is known as the "slip ratio."

A slip ratio of 0% reflects a state in which the wheels are turning freely with no resistance. A slip ratio of 100% reflects a state in which the wheels are completely locked up and the tires are skidding along the road surface.

When the difference between the wheel speed and the vehicle speed becomes too large, slipping occurs between the tires and the road surface. This also creates friction and may eventually act as a braking force to slow the speed of the vehicle. The relationship between braking force and the slip ratio has been calculated. Braking force is not necessarily proportional to the slip ratio and is at its maximum when the slip ratio is between 10 and 30%.

The ABS maximizes brake performance by maintaining a slip ratio within the range of 10 - 30% while keeping cornering force as high as is possible to maintain directional stability. Generally all Anti-Lock Brake Systems operate in a similar manner (deviations will be noted when appropriate during this description of the Lexus LX 470 system operation).

ABS Layout of Components

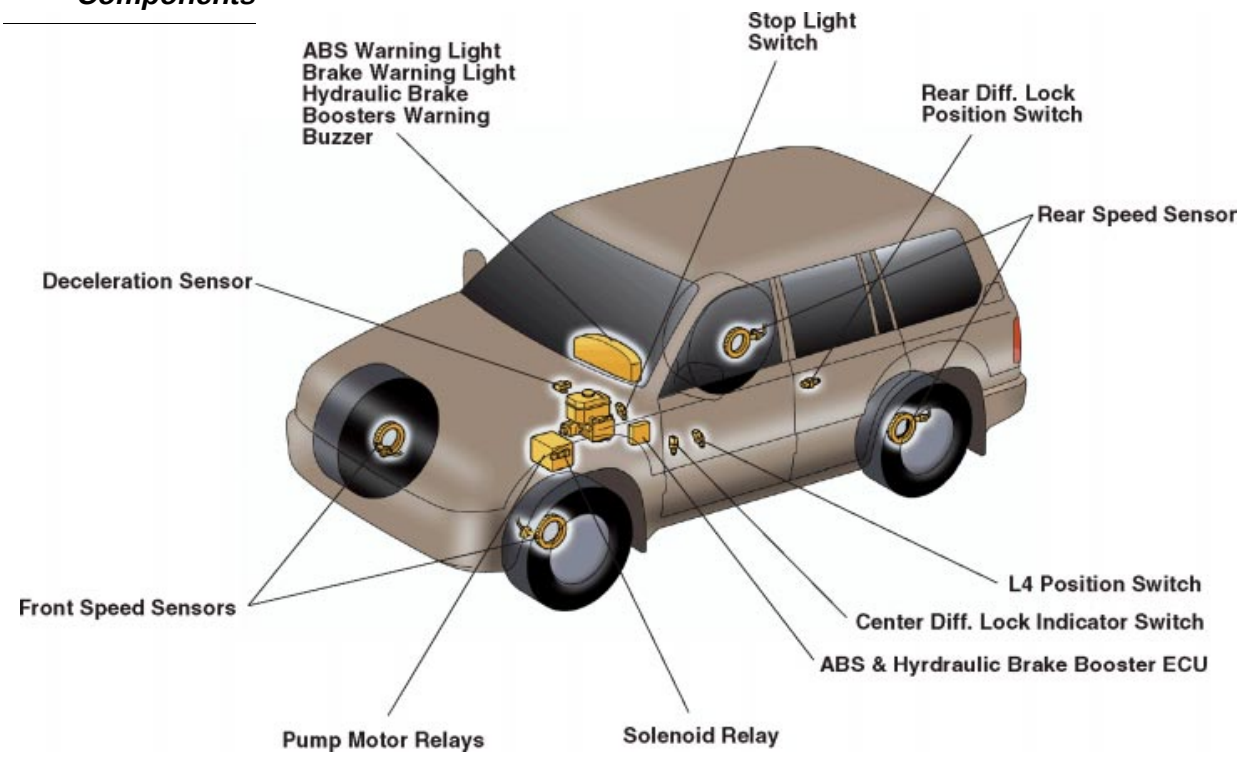

Fig. 4-170

Components and Component Interaction

Wheel & Deceleration Sensors

Wheel speed sensors are input devices that detect the rotational speed of each of the four wheels and transmit a signal to the ABS ECU.

The Deceleration Sensor, sometimes referred to as a “G Sensor,” detects the vehicle’s acceleration in longitudinal directions.

NOTE

Some deceleration sensors detect the vehicle’s lateral acceleration to determine whether or not the vehicle is cornering. During cornering, weight is transferred from the inside wheels to the outside wheels due to inertia. In other words, the wheels on the inside of the turn tend to be locked easily while the outside wheels are more resistant to locking. Hydraulic pressure of the outside rear wheel is increased as opposed to that of the inside to shorten the braking distance.

The use of a deceleration sensor enables the ABS ECU to directly measure vehicle deceleration during braking and provides better input regarding road surface conditions. This improves braking effectiveness and prevents the wheels from locking up. A semi-conductor type deceleration sensor is provided in the Lexus LX 470 model. It is located inside the center console. When force is applied to the deceleration sensor, the semiconductor sensor flexes, and this distortion is measured and converted to an electrical signal that is transmitted to the ABS ECU.

Deceleration Sensor

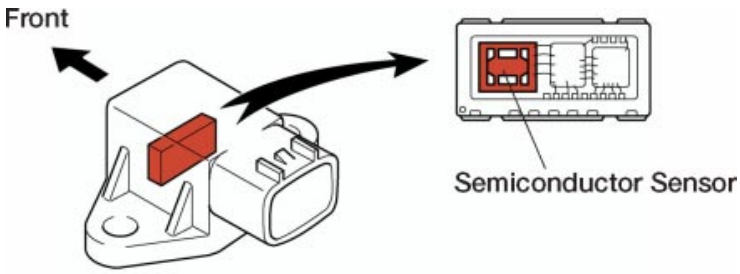

Fig. 4-171

The ECU

The ECU uses the signal to determine the precise road surface conditions and effect the appropriate control measures. The ECU does this by comparing the rate at which the vehicle is slowing down to the rate at which the wheels are slowing down. If the rate at which the wheels are slowing down is greater than the rate at which the vehicle is slowing down, braking force is reduced to control the speed of the wheels and avoid the possibility of a lock-up.

ABS System Diagram

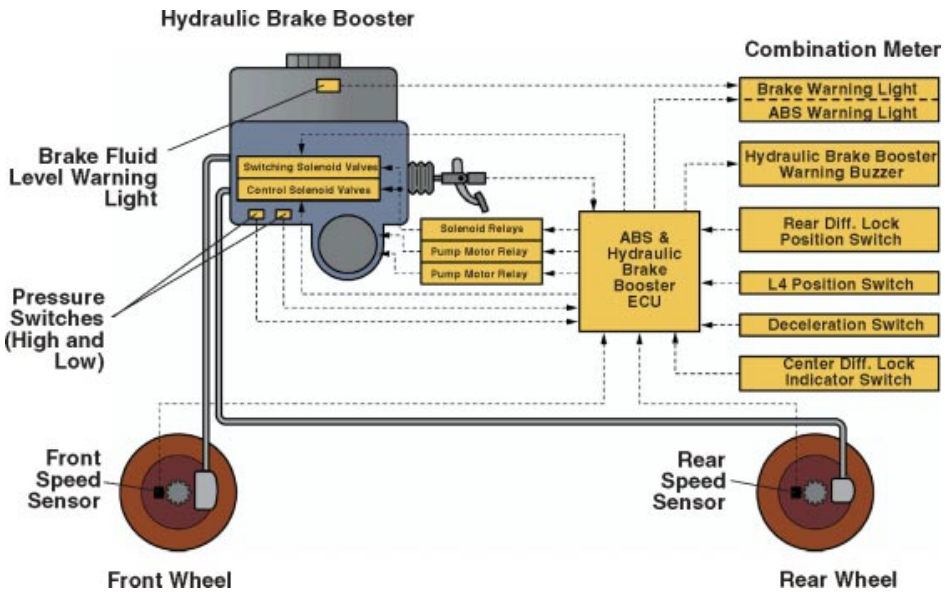

Fig. 4-172

Other inputs to the ABS and Hydraulic Brake Booster ECU include:

- The Rear Differential Lock Position Switch used to detect the position of the Rear Differential Lock.
- L4 Position Switch identifies when the transfer is in LOW.
- Center Differential Lock Switch used to detect the position of the Center Differential Lock.

The ABS ECU monitors the condition of the wheels by calculating the vehicle speed and changes in the wheel speed from the rotational speed of the wheel. As indicated, it also uses inputs from the deceleration sensor to accurately detect vehicle deceleration (resistance to sliding).

- In panic braking situations, the ABS ECU controls wheel speed by generating a signal to the ABS Actuator which changes the hydraulic fluid path to provide the optimum hydraulic pressure to each brake caliper from the brake master cylinder.

NOTE

There are various types of ABS actuators and hydraulic circuitry. Some systems are 3 channel systems (independent control of the front wheels, simultaneous control of the rear wheels), some are 4 channel systems (independent control of all four wheels).

Pump, Pump Motor, Accumulator, Pressure Switches and Relief Valves

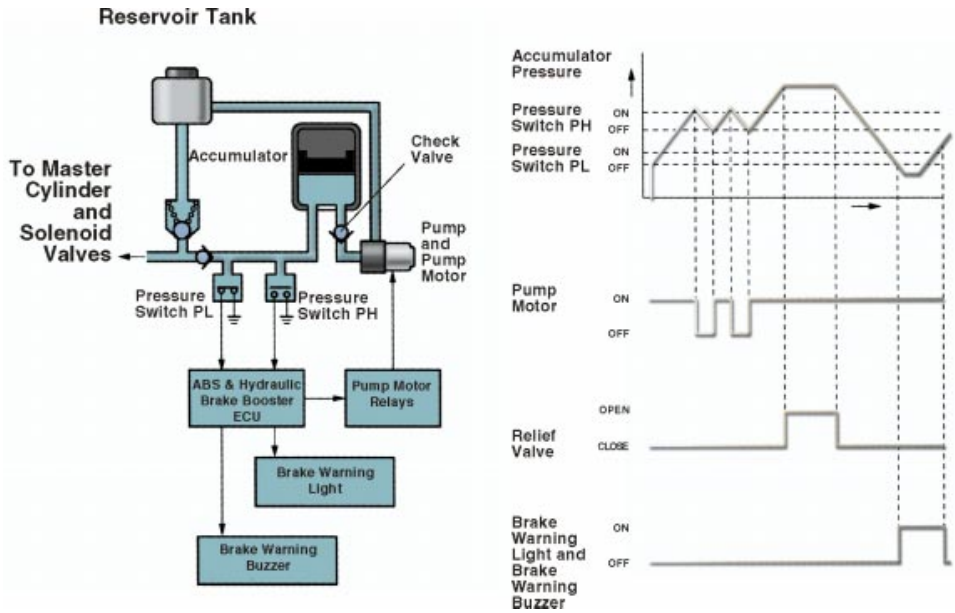

Fig. 4-173

Pump, Pump Motor, Accumulator, Pressure Switches and Relief Valves

- The pump and pump motor draw brake fluid from the reservoir tank and provide hydraulic pressure to the accumulator.
- Pump Motor Relays control the pump motor operation.
- The accumulator stores the hydraulic pressure generated by the pump. It is filled with a high-pressure nitrogen gas.
- Pressure switches monitor the hydraulic pressure of the accumulator and generate output control signals directing the pump motor to turn ON or OFF dependent upon whether the accumulator pressure is above or below pressure switch specifications.

Pressure Switches

The pressure switches are of two types in the LX 470.

a. Pressure Switch PH, used for detecting high pressure, affects control over the pump and pump motor based upon its output signal to the ABS & hydraulic brake booster ECU.

   If accumulator pressure becomes higher than the specified pressure of the PH pressure switch, the switch turns ON. After several seconds, the ABS & hydraulic brake booster ECU turns the pump OFF.

NOTE

If Pressure Switch PH were to malfunction causing the pump to operate continuously, the relief valve opens to prevent excessive pressure from being generated.

b. Pressure Switch PL, used for detecting low pressure, activates the brake warning light and ultimately the brake warning buzzer.

If accumulator pressure becomes lower than the specifications of the PL pressure switch, the switch turns OFF, the brake warning light turns ON, the brake warning buzzer activates, and ABS operation is prohibited.

Hydraulic Circuit

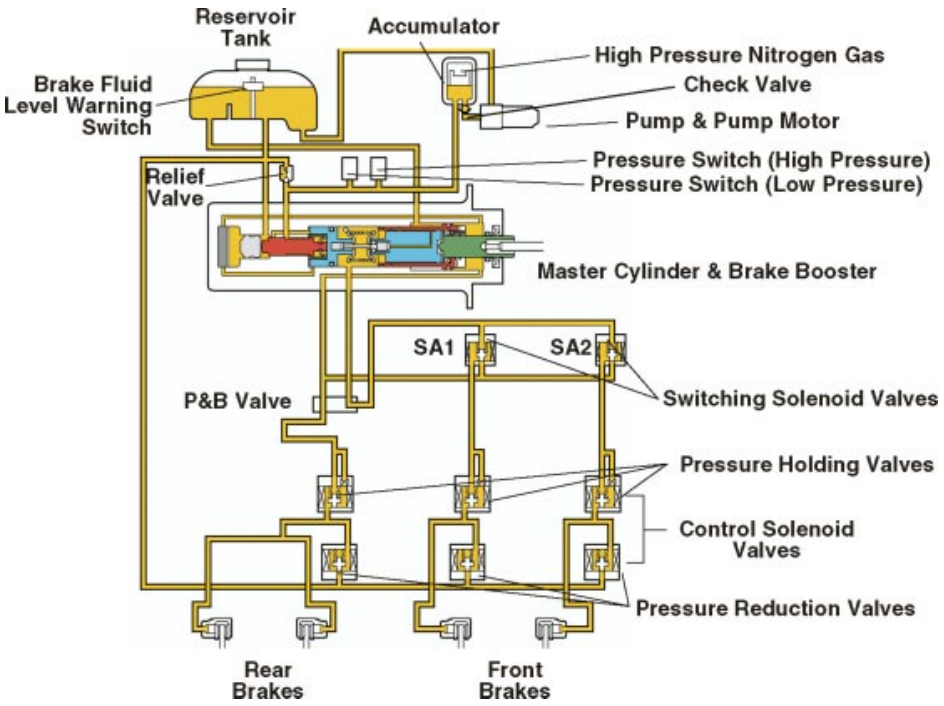

Fig. 4-174

Hydraulic Brake Booster

- The hydraulic brake booster regulates the accumulator pressure in accordance with brake pedal effort and then introduces this pressure to the booster chamber to provide a power assist to the brakes.

  The hydraulic brake booster also changes the fluid path (based on signals from the ABS & hydraulic brake booster ECU) during ABS operation to control the fluid pressure applied to the wheel cylinders.

The ABS & Hydraulic Brake Booster ECU judge the road surface conditions using the signals from the Deceleration Sensor (and those of the wheel speed sensors, pressure switches and other inputs) and initiate the appropriate control.

P & B Valve, Switching Solenoid Valves, Pressure Holding, and Pressure Reduction Valves

- The P & B Valve controls the hydraulic pressure of the rear brake system to provide an appropriate distribution of front/ rear braking force.

NOTE

If the front brake system fails, the P & B valve will not control the hydraulic pressure of the rear brake system.

- Control signals from the ABS & Hydraulic Brake Booster ECU open and close the switching solenoid valves. Switching Solenoid Valves SA1 and SA2 are used to redirect hydraulic pressure when the ABS is activated, and when normal braking mode is resumed.

The Brake Hydraulic Control Units operate based on signals from the ABS ECU, reducing, increasing, or holding steady the hydraulic pressure as is necessary to maintain the optimum slip ratio and avoid wheel lock-up.

- The Control Solenoid Valve controls hydraulic pressure that is applied to the wheel cylinders during ABS operation. The Control Solenoid Valve in the LX 470 is composed of three pressure holding valves and three pressure reduction valves.

  The valves are turned ON and OFF during ABS operation. Hydraulic pressure to the wheel cylinders during ABS operation is effected based upon combinations of ON/OFF conditions (Pressure Increase Mode, Pressure Holding Mode, and Pressure Reduction Mode) involving these valves.

Master Cylinder & Hydraulic Booster

Fig. 4-175

Master Cylinder & Hydraulic Booster

The Lexus LX 470's Brake Master Cylinder assembly integrates a brake booster, brake master cylinder, the ABS actuator, and the P & B Valve. It is designed to be compact and light-weight. It employs hydraulic pressure rather than vacuum pressure to effect brake assist. The GS 300/400 uses a similar hydraulic design, however, the system's master cylinder is of a single piston construction. The unique dual piston construction of the master cylinder used in the LX 470 will be discussed below.

Master Cylinder & Hydraulic Booster

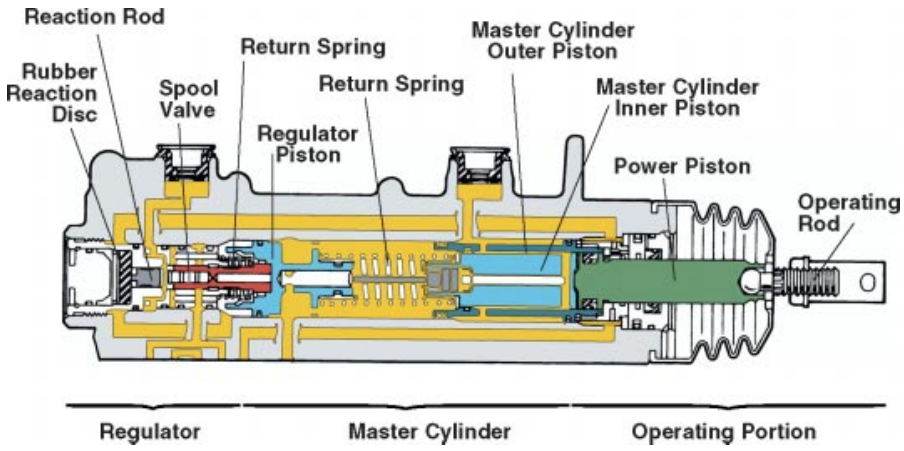

Fig. 4-176

The brake booster is integrated with the master cylinder. This construction enables the hydraulic pressure generated by the brake booster to be applied directly to the rear brakes.

The master cylinder is the center port type with dual piston construction consisting of an outer and an inner piston. Booster assist is applied to both the inner and outer pistons. The inner piston is used for manual brake. It has a small bore and a long stroke that provides more pressure with less effort. The manual brake applies the front brakes only.

The operating rod and power piston are linked directly and transmit pedal effort when the brake is applied.

The regulator piston and spool valve are directly linked and control rear brake and hydraulic boost. A return spring provides for the return of the spool valve.

Pressure Increase (Low Pressure)

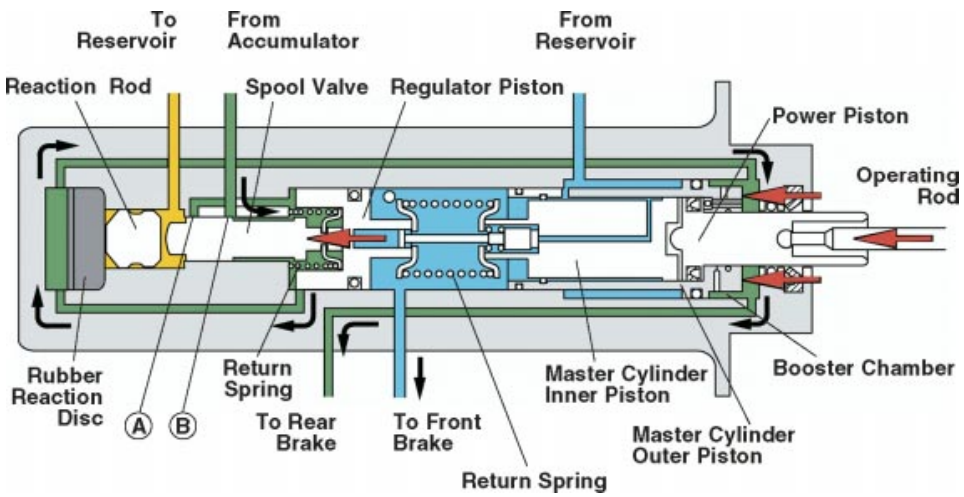

Fig. 4-177

Master Cylinder and Brake Booster Operation

A. Pressure Increase (low pressure)

Pedal effort is transmitted via the operating rod, power piston, and master cylinder inner piston. However, because the load setting of the master cylinder's return spring is higher than that of the regulator piston's return spring, the spool valve moves forward and closes the path (A) between the reservoir and the booster chamber and opens the path (B) between the accumulator and the booster chamber.

By overcoming the force of the master cylinder return spring, pressurized brake fluid is introduced into the booster chamber to provide a power assist to the pedal effort. The return spring compresses. This causes the volume in the master cylinder to become compressed and increases the pressure that is applied to the front brakes. At the same time, the pressure in the booster chamber increases the pressure that is applied to the rear brakes.

NOTE

During the initial stage of the brake operation, booster pressure that is applied to the rubber reaction disc is small. Therefore, the spool valve and reaction rod return force is negligible.

Pressure Increase (High Pressure)

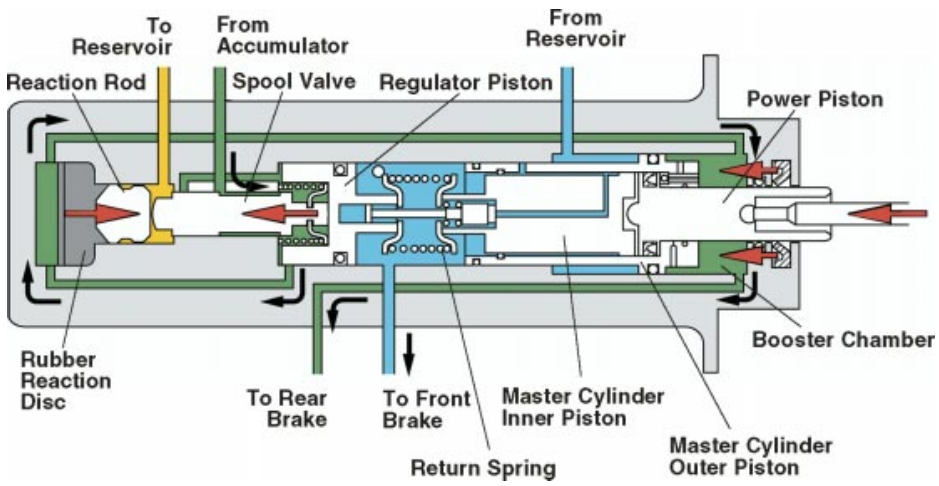

Fig. 4-178

B. Pressure Increase (High Pressure)

In contrast to the low pressure condition, when the pressure is high, the booster pressure that is applied to the rubber reaction disc increases. Accordingly, the Rubber Reaction Disc deforms and causes a return force to be applied to the spool valve via the Reaction Rod. A greater reaction force is transmitted to the brake pedal. The result is a servo type mechanism where the servo ratio is lower during high pressure than during low pressure.

Pressure Holding

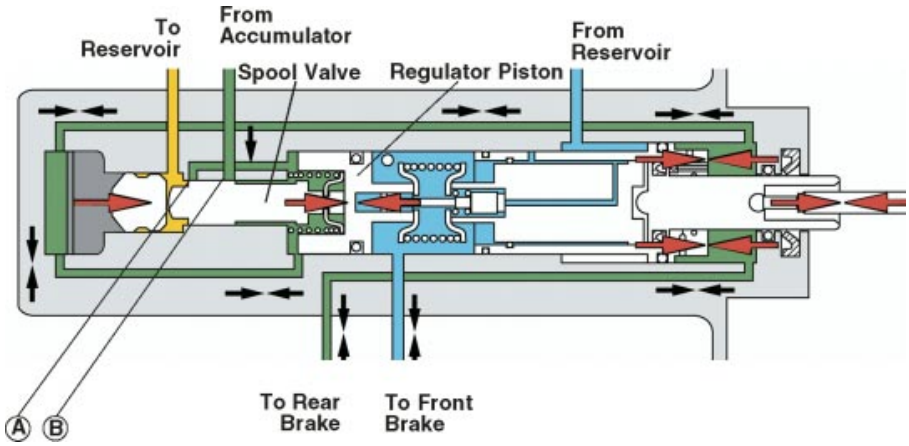

Fig. 4-179

C. Pressure Holding

This is a state when the force that is applied to the brake pedal and the pressure exerted by the master cylinder are in balance. This balanced condition causes the spool valve to close both ports A (to the reservoir) and B (from the booster chamber to the accumulator). As a result, the brake system is in a holding state.

Pressure Reduction

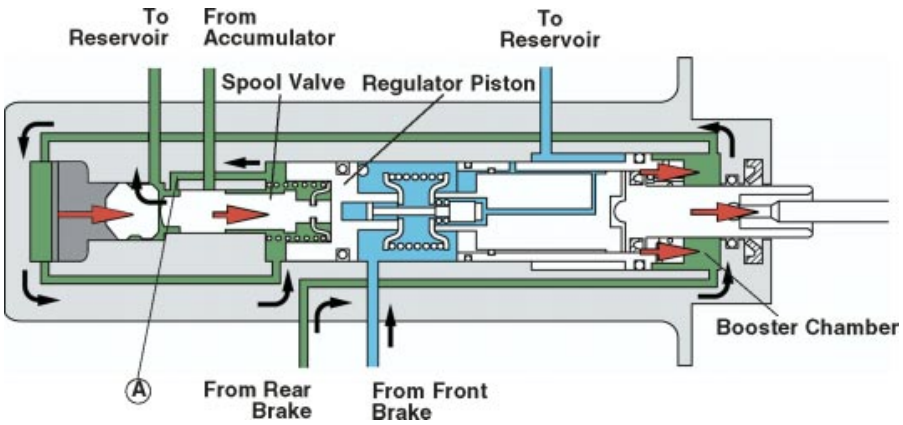

Fig. 4-180

D. Pressure Reduction

When brake pedal pressure is released, the master cylinder pressure decreases. The regulator piston's return force is increased causing the regulator piston to retract and the spool valve to retract.

As a result, the path between the reservoir and the booster chamber (A) opens. A reduction in booster pressure occurs and a balanced state is affected that corresponds to the normal brake pressure. This process is repetitively performed to reduce both the booster pressure and the master cylinder pressure based upon the force that is applied by the brake pedal.

No Booster Operation

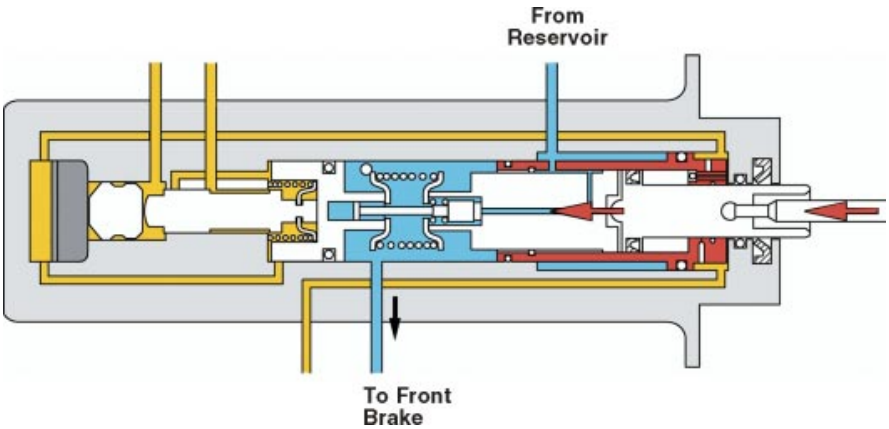

Fig. 4-181

E. Power Supply Malfunction

No pressure will be supplied by the regulator if accumulator pressure is lost due to a malfunction. Power assist will not be applied to brake pedal effort and pressure to the rear brakes will not be increased. Because a power assist is not applied to the master cylinder outer piston, it does not operate and remains in its initial position.

However, pressure to the front brakes will be increased by the master cylinder inner piston based upon the pedal effort applied to the brake pedal and you will have front brakes.

Normal Brake Operation

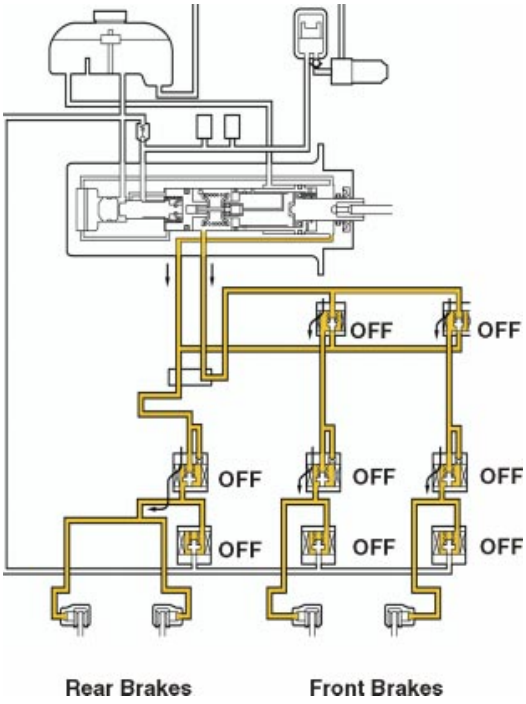

Fig. 4-182

Normal Braking

As indicated previously, there are two switching solenoid valves. Directed by signals initiate by the ABS & Hydraulic Brake Booster ECU, switching solenoid valves SA1 and SA2 are used to redirect hydraulic pressure when the ABS is activated and when normal braking mode is resumed.

During normal braking, the path to the Master Cylinder side of the system is opened. All of the solenoid valves (Pressure Holding and Pressure Reduction) as well as switching solenoid valves SA1 and SA2, are in the OFF position.

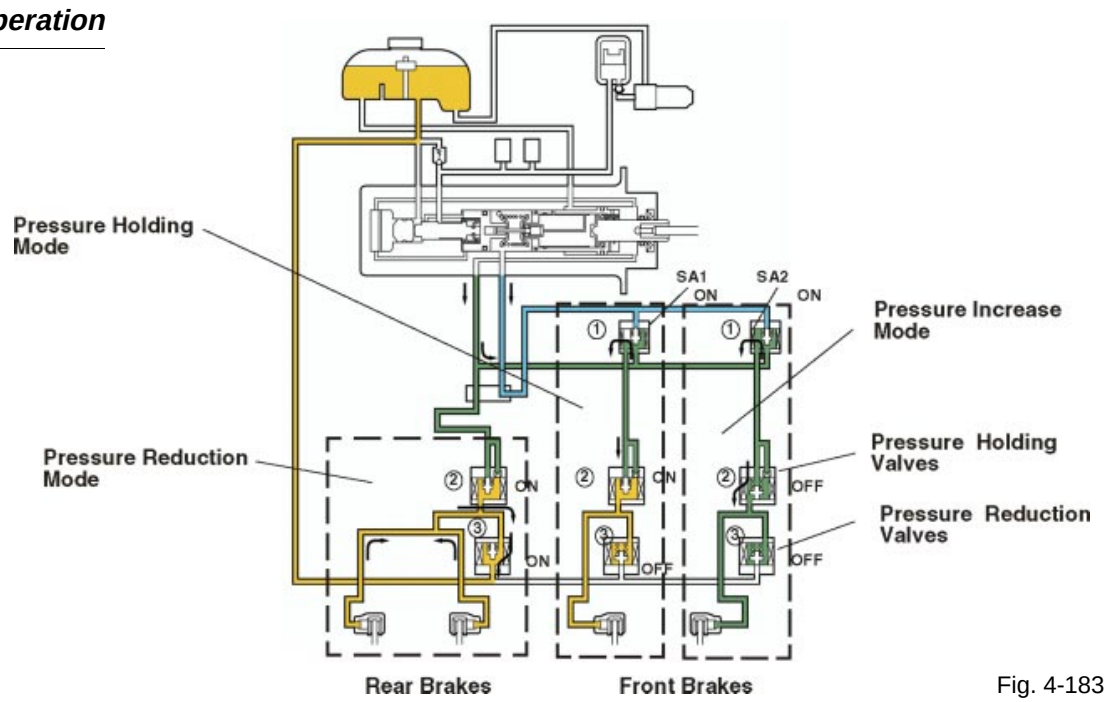

Fig. 4-183

ABS Operation

During ABS Operation, the path to the Brake Booster chamber side of the system is opened.

The Brake Hydraulic Control Unit's "Pressure Holding and Pressure Reduction Valves" operate based upon signals from the ABS ECU, reducing, increasing, or holding steady (in various ON/OFF combinations) to control the pressure that is applied to each wheel cylinder and maintain the optimum slip ratio to avoid wheel lock-up.

At the same time, the hydraulic path between the Master Cylinder and the front brakes is shut OFF to prevent the brake pedal from vibrating and to improve brake pedal feel when the brakes are applied.

The Traction Control System (TRAC)

As indicated, the purpose of ABS is to provide good traction and steering stability during adverse braking conditions. The purpose of the Lexus Traction Control System (TRAC) is to prevent wheel spin from occurring when accelerating.

For example, on roads with a low coefficient of friction (low resistance to sliding) such as on loose gravel or slippery roads, the drive wheels spin when the vehicle is accelerated quickly, resulting in a loss of traction. A possible skid may also occur. The maximum torque that can be transmitted to the wheels is determined by the coefficient of friction (resistance to sliding) between the road and the tires. Exceeding that maximum torque results in the wheels spinning.

Maintaining the torque at a level appropriate to avoid wheel spin on acceleration is sometimes difficult. Our instinct is to depress the accelerator pedal too hard causing the wheels to spin and resulting in a loss of traction and torque.

TRAC assists the driver in these situations by controlling wheel speed and engine torque. When the wheels begin to spin, TRAC lowers the engine torque and controls drive wheel speed regardless of the driver's accelerator input, thereby reducing the torque transmitted to the road surface to an appropriate level. This brings the vehicle under control and provides the stability required when accelerating quickly or when accelerating while cornering.

Engine output control (torque) is accomplished in two ways. In front-wheel drive vehicles such as the ES 300 and RX 300, the engine's output is controlled by a fuel-cut method (cylinder kill). To effect the same control in rear-wheel drive Lexus vehicles, the ECU electronically controls the throttle plate (air-cut).

NOTE

In some Lexus models, a second throttle plate was employed.

TRAC & ABS Interface

TRAC controls drive wheel speed by varying caliper fluid pressure, much the same as ABS controls wheel speed. The main differentiation here is that ABS controls all of the wheels when braking, while TRAC controls only the drive wheels.

Both systems share many of the same components and sensors. Both ECUs are combined in one housing, ABS actuator control is shared, and both systems monitor inputs from the same wheel speed sensors to watch for an improper slip ratio. Both ABS and TRAC are available when the ignition switch is turned to the ON position. However, TRAC may be turned OFF.

NOTE

There are instances when it is necessary to turn TRAC OFF. For example, when performing a speedometer check or whenever work on a dynamometer is required such as during an emissions inspection.

TRAC Operation

The ABS/TRAC ECU receives input signals from the wheel speed sensors and constantly calculates the speed of each wheel. At the same time, it estimates the vehicle's speed and sets a target control speed. A sudden acceleration on a slippery road surface causing the drive wheels to spin and exceed the target control speed, causes the ABS/TRAC ECU to output a signal to the ABS Actuator solenoid valves in three modes (pressure increase, pressure holding, and pressure reduction).

The ABS Actuator (consisting of pumps, reservoirs, pressure holding and pressure reduction valves) controls wheel revolution (wheel speed) by adjusting brake fluid pressure to each caliper according to a signal from the ABS/TRAC ECU. At the same time, the ABS/TRAC ECU electronically controls engine output (through throttle plate control LS 400 and GS 300/400; or initiates fuel cut, in the case of the ES 300) and applies the appropriate traction and torque required to control the slip.

The Vehicle Skid Control System (VSC)

The primary purpose of the conventional ABS and TRAC systems is to ensure a vehicle's stability during braking and acceleration The Vehicle Skid Control System (VSC) adds another dimension of control by providing stability during cornering. VSC uses a "Yaw Sensor" to provide side to side movement control.

Under ordinary circumstances, the vehicle will corner in a stable manner in response to the driver's steering effort. However under some circumstances the vehicle may exhibit understeer or oversteer tendencies. Understeer and oversteer conditions occur when the wheels lose traction (lateral grip).

Understeer & Oversteer Conditions

Understeer occurs when the front wheels of a vehicle lose cornering traction in relation to the rear wheels. This loss of front wheel cornering traction results in a plowing or pushing effect that can compromise steering control.

Understeer

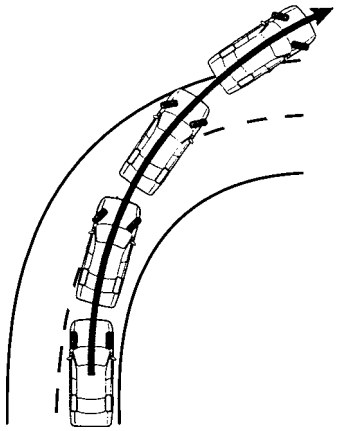

Fig. 4-184

Oversteer occurs when the rear wheels of a vehicle lose their traction in relation to the front wheels. When the rear wheels lose their traction, the vehicle's back end has a tendency to swing out or fishtail.

Oversteer

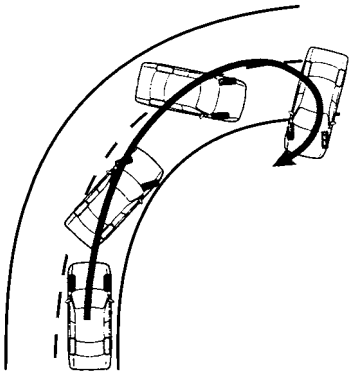

Fig. 4-185

The VSC system activates in both of the aforementioned conditions to dampen the vehicle's tendency to oversteer or understeer. The ABS & TRAC & VSC ECU determines the condition of the vehicle based upon inputs from the steering angle sensor, throttle position sensor, vehicle speed sensors, deceleration sensor (G-sensor), and the yaw rate sensor.

The vehicle speed sensor, throttle position sensor, and steering angle sensor provide information regarding the vehicle speed, acceleration, and amount of steering wheel movement at any given time. The yaw rate sensor detects the angular velocity of the vehicles rotation around a perpendicular axis. The Deceleration Sensor (G-Sensor) detects the vehicle's lateral acceleration.

The ECU can identify the appropriate line (or curve) that the vehicle should be traveling by analyzing the vehicle's speed and steering wheel input. This calculated determination is referred to as the "target yaw rate." Since the yaw rate is a factor of steering wheel angle and vehicle speed, the yaw rate sensor and steering angle sensor report the "actual" yaw rate (the actual line of travel) to the ECU.

Understeer and Oversteer Control

Whether or not the vehicle is in the state of understeer or oversteer, is determined by the difference between the "target yaw rate" and the vehicle's actual yaw rate. The ECU compares the actual yaw rate to the target yaw rate. If the vehicle's actual yaw rate is smaller than the target yaw rate, the ECU identifies a potential understeer condition. To reduce the potential of understeer, the ECU reduces the throttle opening and applies brake pressure to the front wheels and the inside rear wheel generating movement to an inward direction.

NOTE

Front wheel drive, rear wheel drive and all wheel drive strategy may be different.

Understeer Control

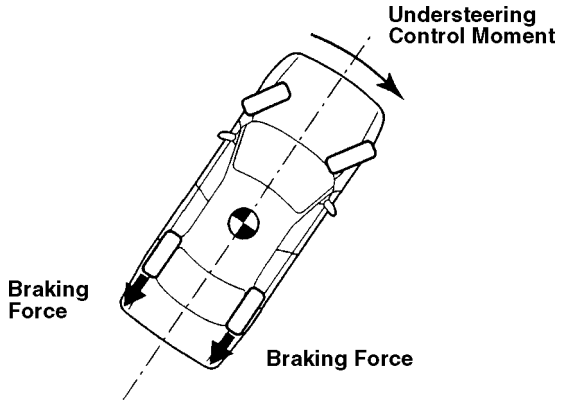

Fig. 4-186

Whether or not the vehicle is in a state of oversteer is determined by the values of the vehicle's slip angle and the vehicle's angular velocity (time-dependent changes in the vehicle's slip angle). When the vehicle's slip angle and slip angle velocity are both large, the ECU identifies a potential oversteer condition. To control the potential oversteer condition, the ECU controls the engine output and applies brake pressure to the outside front wheel generating inertial movement in the vehicle's outward direction.

Oversteer Control

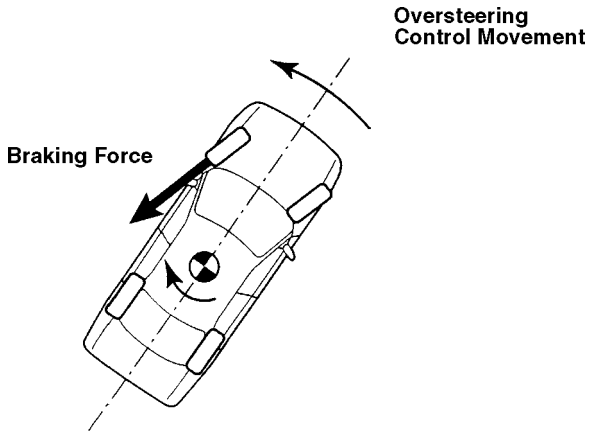

Fig. 4-187

The key sensors for VSC operation are the Yaw Rate Sensor, the Deceleration Sensor, and the Steering Angle Sensor. Although their construction may differ, the basic operation is the same for all models.

Yaw Rate Sensor

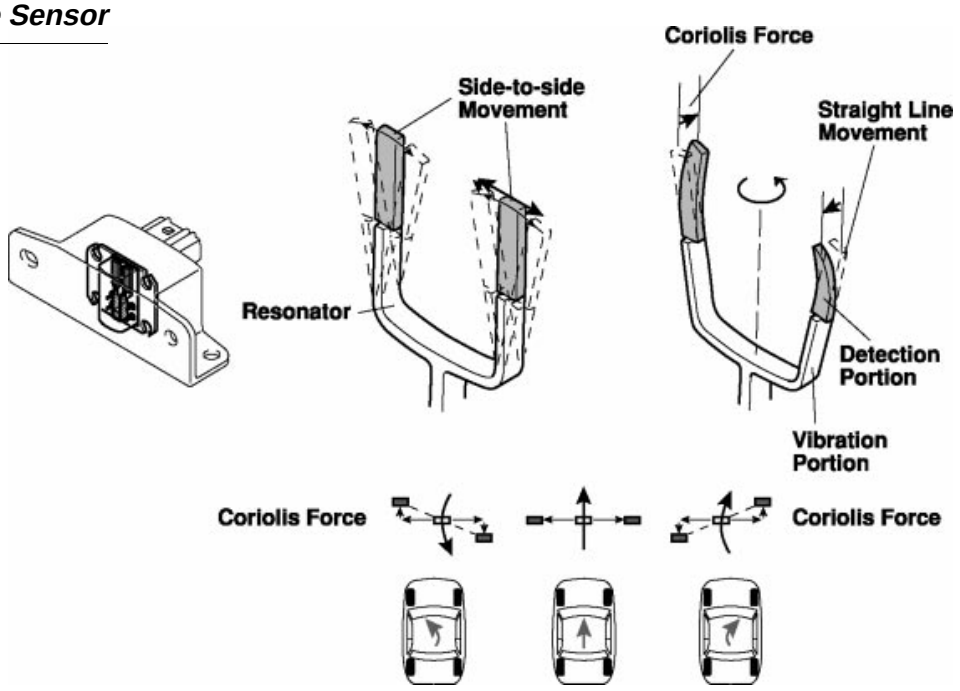

Fig. 4-188

- The Yaw Rate Sensor in the 1998 LS 400 VSC system contains a tuning-fork shaped vibration-type gyro. Each resonator consists of a vibrating portion and detection portion that are shifted 90 degrees to form one unit. A piezoelectric ceramic piece is attached to both the vibration and detection portions of the resonator.

  The piezoelectric ceramic piece becomes distorted when voltage is applied to it, and generates a voltage when an external force is applied to distort the ceramic piece.

  To detect yaw rate, alternating current voltage is applied to the vibrating portion of the resonator which causes it to vibrate (side to side movement).

  As a result of the earth's rotation, a force is generated which deflects objects to the right in the Northern Hemisphere and to the left in the Southern Hemisphere. This force is referred to as Coriolis Force.

The detection portion of the resonator distorts based upon the amount and direction of the distortion of the piezoelectric ceramic piece caused by the Coriolis Force that is generated around the resonator. The distortion generates a voltage when an external force is applied to it. Output voltage goes down on left turns and goes up on right turns. Yaw rate is determined based upon the output voltages generated.

Deceleration Sensor

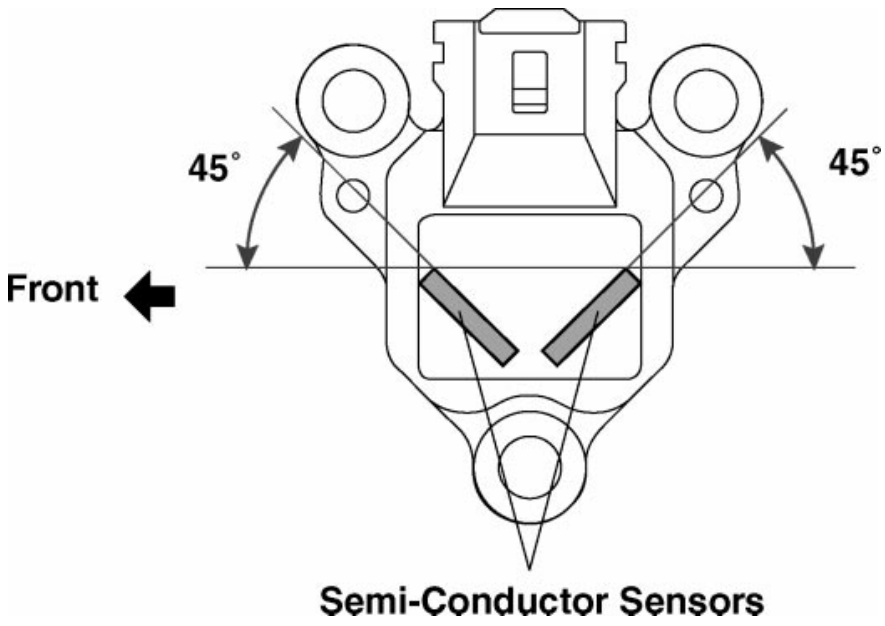

Fig. 4-189

- The Deceleration Sensor detects the vehicle's acceleration in both longitudinal and lateral directions and relays that information to the ABS & TRAC & VSC ECU. It is composed of two semi-conductor sensors.

  Each semi-conductor in the sensor is installed so that each is at a 45° angle in the longitudinal direction and at a 90° angle opposed to each other. Each semi-conductor sensor contains a weight that moves when deceleration forces are applied to the vehicle. The sensor converts the movement of the weight into an electronic signal and transmits it to the ECU.

  These electronic signals have linear output characteristics. One of the sensors registers a drop from 2.3 V, when forward movement is detected, and registers an increase in voltage from 2.3 V, when rearward movement is detected. The other sensor's voltage increases with forward movement and drops with rearward movement. The ECU combines the signals received from each of the semi-conductors to calculate acceleration in all horizontal directions.

Steering Angle Sensor

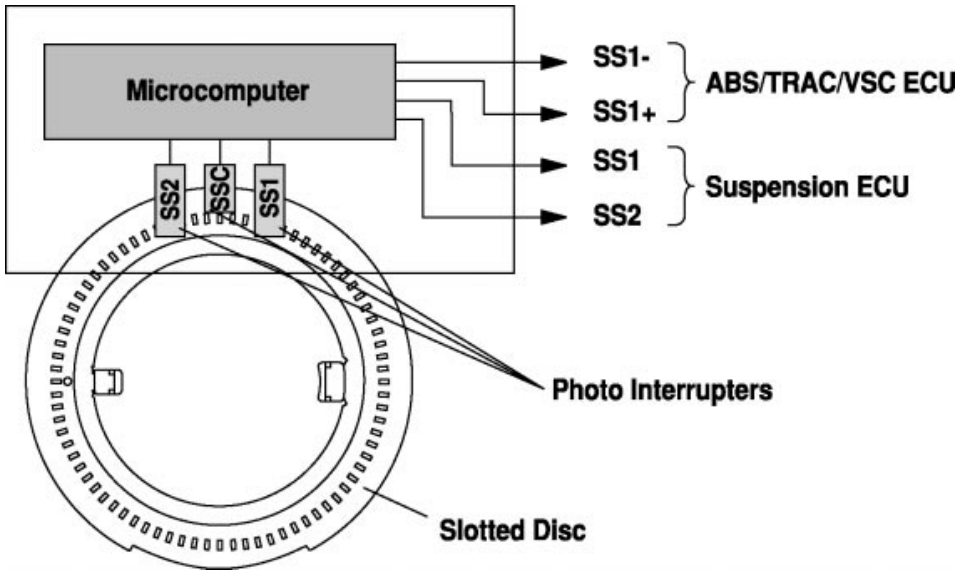

Fig. 4-190

- The Steering Angle Sensor detects the steering direction and angle of the steering wheel. It is composed of a slotted disc, a microcomputer and three photo interrupters (SS1, SS2, and SSC). The slotted disc rotates with the steering wheel and between the photo interrupters.

  Each photo interrupter consists of a Light Emitting Diode (LED) and a photo-transistor facing each other. As the steering wheel is turned, the slotted disc rotates with the wheel and controls the light transmission between the LED and the photo-transistor. The sensor converts the change in the light radiation between the two elements to ON/OFF signals.

  The signals that are detected by two photo interrupters SSI and SS2 are converted by the micro-computer into serial signals that are output to the ABS & TRAC & VSC ECU indicating the angle of the steering wheel. An output from the Suspension Control ECU detects the vehicle's vertical acceleration rate.

VSC Components

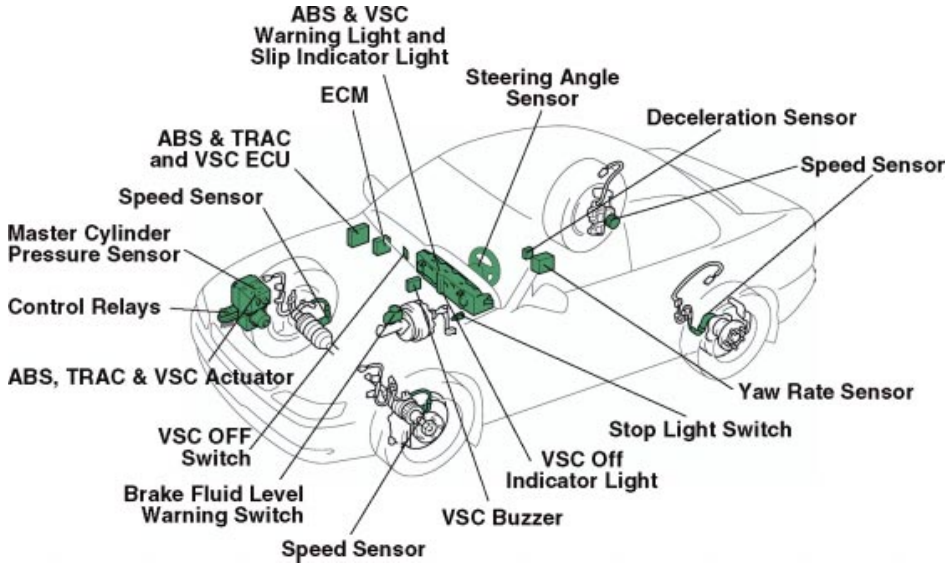

Fig. 4-191

VSC Components

Let's take a look at some of the components of the VSC system installed in the ES 300.

The following warning and indicator lights are utilized:

- ABS and VSC warning lights illuminate when the ECU detects a malfunction.
- Slip indicator light blinks to indicate TRAC or VSC operation
- VSC OFF indicator light illuminates when the TRAC and VSC are turned OFF by the VSC OFF Switch.
- VSC OFF Switch disables the TRAC and VSC systems.
- VSC warning buzzer emits an intermittent sound to indicate that the ECU detects oversteer and understeer tendency.

The ECM transmits signals indicating throttle valve opening angle, shift position, etc. to the ABS & TRAC & VSC ECU.

The ABS & TRAC & VSC ECU:

- Judges the vehicle driving conditions based upon sensor input.
- Sends brake control signals to the brake actuator.
- Transmits fuel cutoff requests to the ECM.
- Sends a dampening force control request signal to the shock absorber control ECU in EMS equipped vehicles (LS 400).
- Sends a cruise control cancel signal to the Cruise ECU.

As indicated earlier:

- The Speed Sensors detect the wheel speed of each of the four wheels.
- The Brake Actuator changes the fluid path to each wheel cylinder based upon signals from the ECU.
- The Master Cylinder Pressure Sensor is integrated in the brake actuator and detects the Master Cylinder pressure.

The Pump Motor Relay controls actuator pump operation and the Solenoid Relay supplies power to the actuator solenoid valves.

The Stop Light Switch detects the brake depressed signal and the Brake Fluid Level Warning Switch warns of low brake fluid levels.

VSC Components

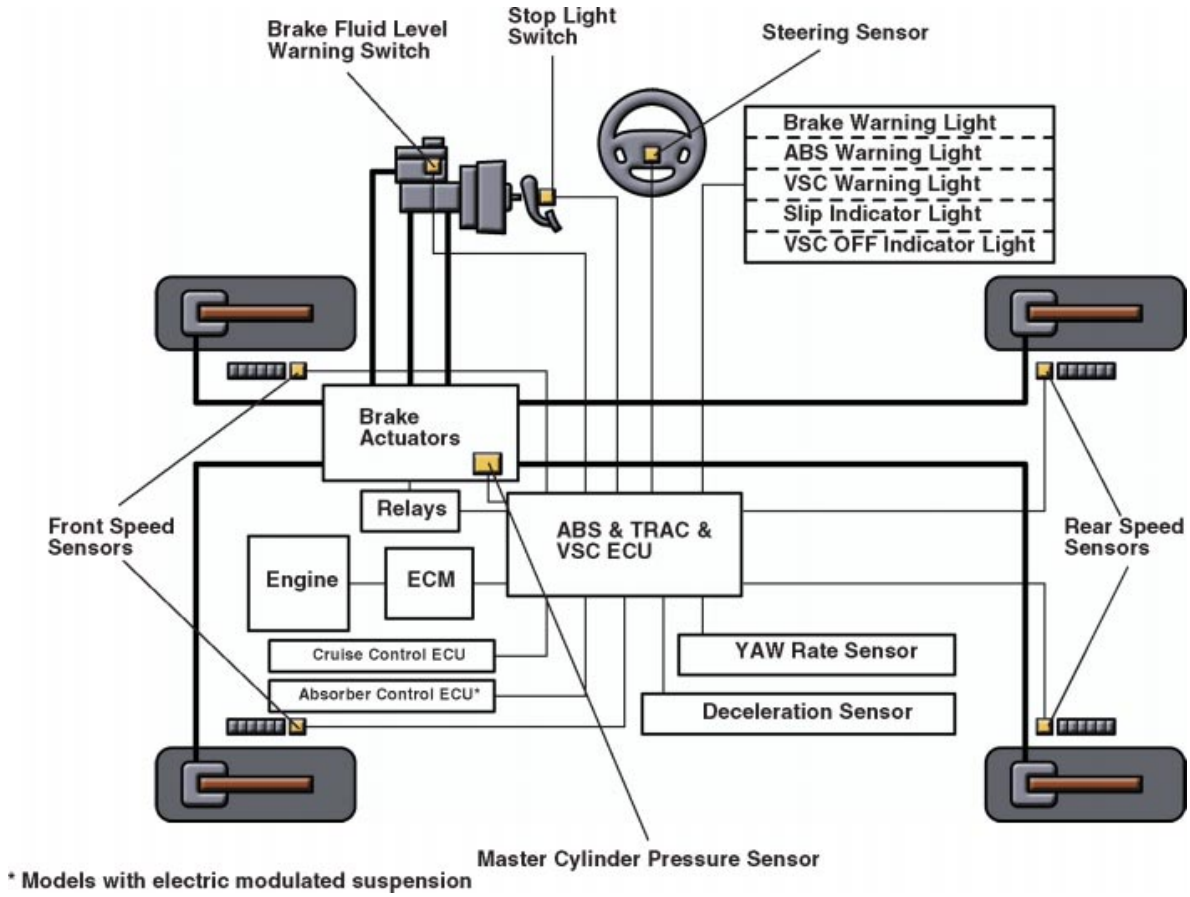

Fig. 4-192

VSC System Operation

Up to now we have been examining the VSC System in general. System operation in all Lexus vehicles is primarily the same. The ABS & TRAC & VSC ECUs of all systems determine the condition of the vehicle based upon inputs from the Deceleration Sensor, Steering Angle Sensor, Yaw Rate Sensor, and Wheel Speed Sensors.

The pump and pump motors of all systems draw brake fluid from the reservoir tank and provide pressure to the accumulator. Switching solenoid valves and cut valves direct the flow of brake fluid in the system.

The number of solenoid valves involved may change slightly from system to system. However, ABS & TRAC & VSC ECU feedback control of the system is effected through the ON/OFF switching of various combinations of solenoid valves to regulate the fluid pressure that is applied to each caliper in pressure increase, pressure holding and pressure reduction mode. This ECU directed control of caliper fluid pressure serves to restrain the tendency to oversteer or understeer by applying the proper amount of brake pressure to the appropriate wheel while controlling engine output (fuel cut-method or throttle plate control).

Let's look at the operation of the Lexus ES 300 ABS, TRAC, and VSC System in a little more detail. Note: The Lexus ES 300 system employs a vacuum brake booster rather than the hydraulic type described previously for the LX 470 and the GS 300/400.

The yaw rate and deceleration sensors are contained in one assembly that is located under the center console.

Yaw Rate & Deceleration Sensor

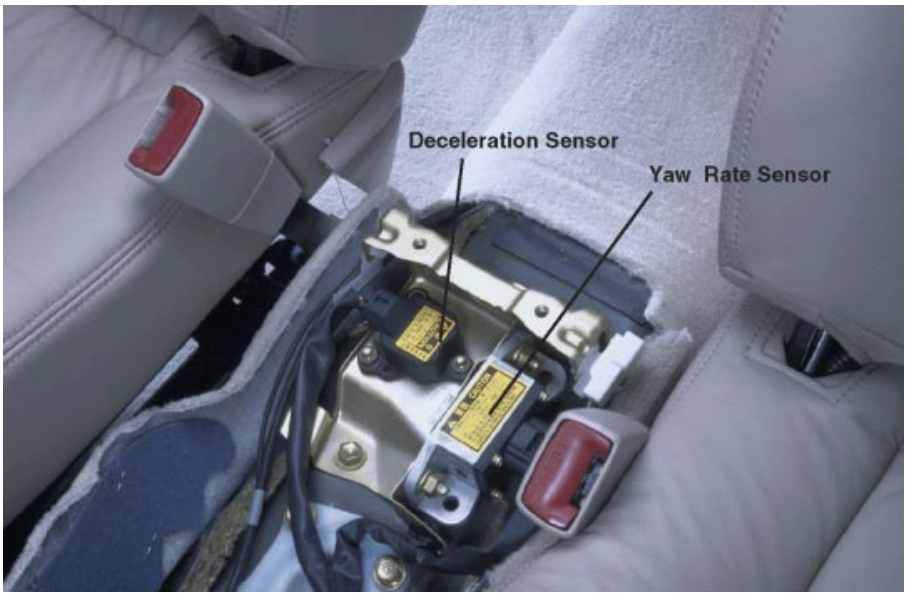

Fig. 4-193

ABS, TRAC, & VSC Actuator

Fig. 4-194

ABS, TRAC, & VSC Actuator

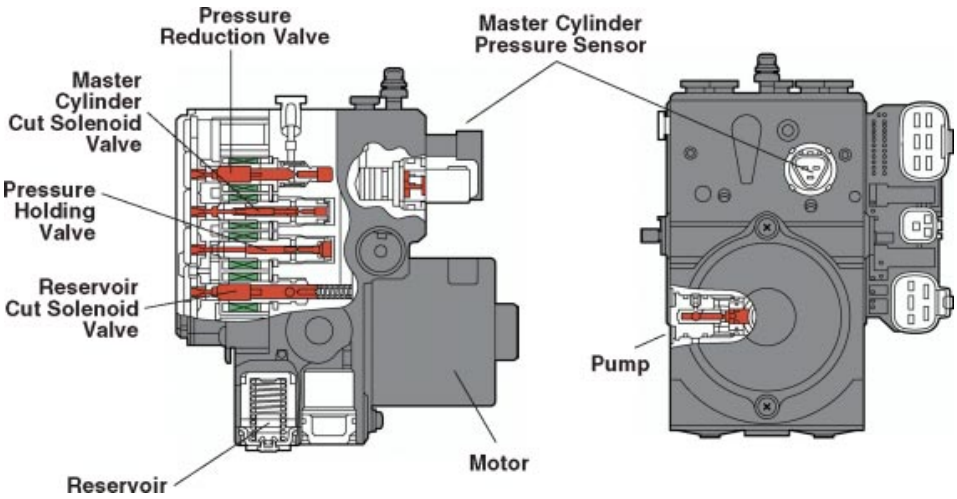

Fig. 4-195

The Brake Actuator of the system is composed of the following components integrated in one unit:

- 1 motor
- 2 pumps
- 2 reservoirs
- 4 master cylinder cut valves
- 2 reservoir cut valves
- 4 pressure holding valves
- 4 pressure reduction valves
- 1 master cylinder pressure sensor
- The pressure regulator valve is integrated in the master cylinder cut solenoid valve.

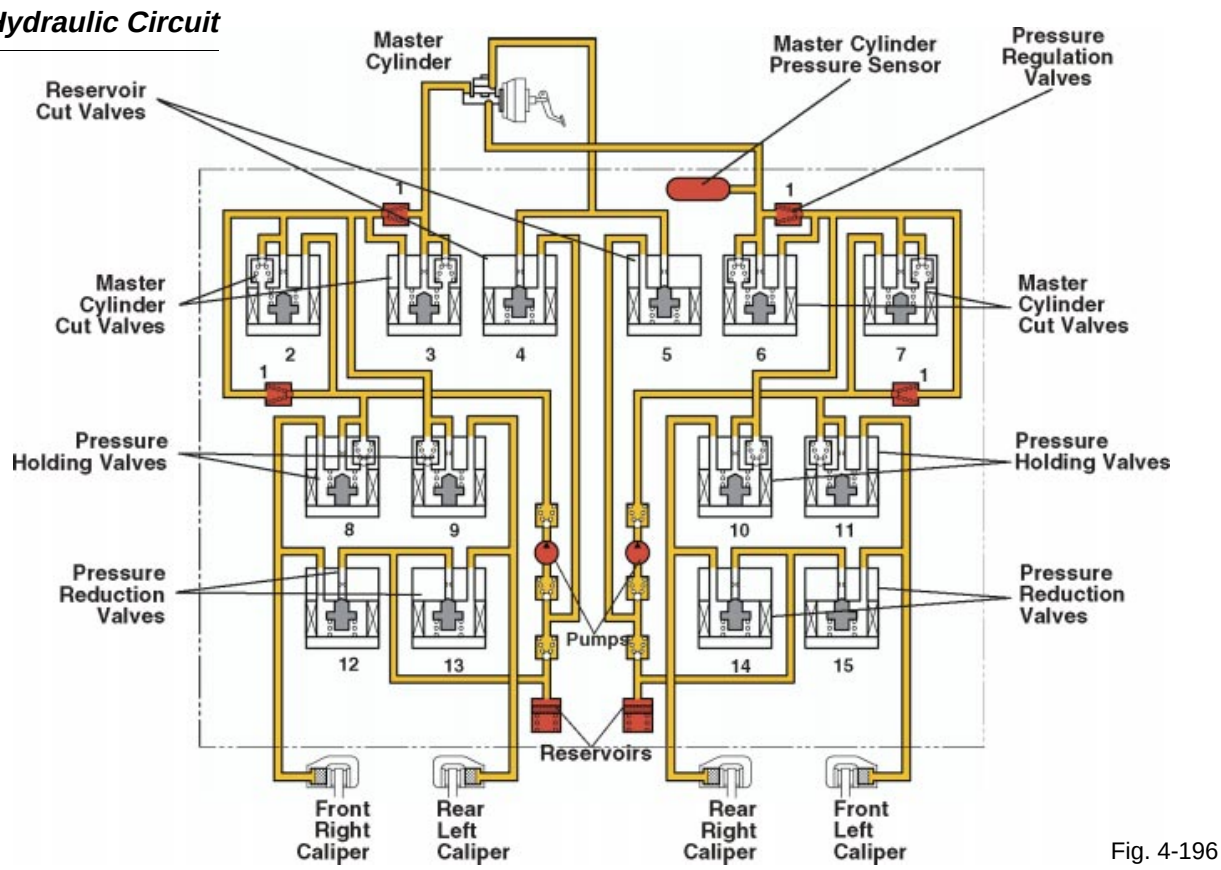

Fig. 4-196

The hydraulic circuit is composed of 14 two-position solenoid valves.

There are 2 pumps, 2 reservoirs, 4 pressure regulator valves, and a master cylinder pressure sensor.

The four master cylinder cut solenoid valves isolate the master cylinder when the pumps operate.

The two reservoir cut solenoid valves make the fluid supply available to the two pumps.

The four pressure holding solenoid valves hold pressure at the wheels when in holding mode.

The four pressure reduction solenoid valves reduce pressure at the wheels during pressure reduction mode.

ABS Operation

The ECU calculates the speed and deceleration rate of the wheels based upon the signals received from the wheel speed sensors. The ECU then controls the pressure holding valve and pressure reduction valve in order to regulate the fluid pressure that is applied to the wheel cylinder of each wheel in the following 3 modes:

ABS Operation

ABS Not Activated	Normal Braking	—	—
ABS Activated	Pressure Increase Mode	Pressure Holding Mode	Pressure Reduction Mode
Hydraulic Circuit	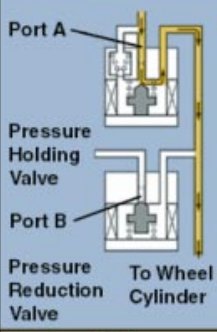		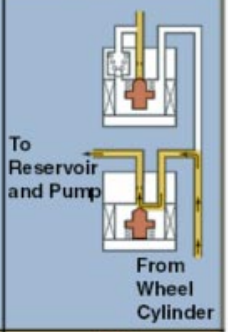
Pressure Holding Valve (Port A)	OFF (Open)	ON (Close)	ON (Close)
Pressure Reduction Valve (Port B)	OFF (Close)	OFF (Close)	ON (Open)
Wheel Cylinder Pressure	Increase	Hold	Reduction

Fig. 4-197

During Pressure Increase Mode (normal braking) the pressure holding valves are in the OFF position and Port A is open. Also the pressure reduction valves are in the OFF position and Port B is closed. This results in an increase in wheel cylinder pressure.

During Pressure Holding Mode the pressure holding valves are in the ON position and Port A is closed. The pressure reduction valves are in the OFF position and Port B is also closed. In Pressure Holding Mode the fluid pressure is in a state of equilibrium or homeostatic state.

Pressure Reduction Mode is achieved when the pressure holding valves are in the ON position and Port A is closed. The pressure reduction valves are also in the ON position, however Port B is open. Pressure Reduction Mode, as it's name implies, results in a reduction of pressure to the calipers.

TRAC Operation

The fluid pressure that is generated by the pump is regulated by the pressure regulator valve and maintained within specified parameters. The calipers of the drive wheels are controlled in pressure increase, pressure holding and pressure reduction modes to prevent the drive wheels from slipping upon sudden acceleration. The ABS & TRAC & VSC ECU simultaneously controls engine output based upon signals received from various sensors indicating vehicle condition.

TRAC Operation

Increase Mode

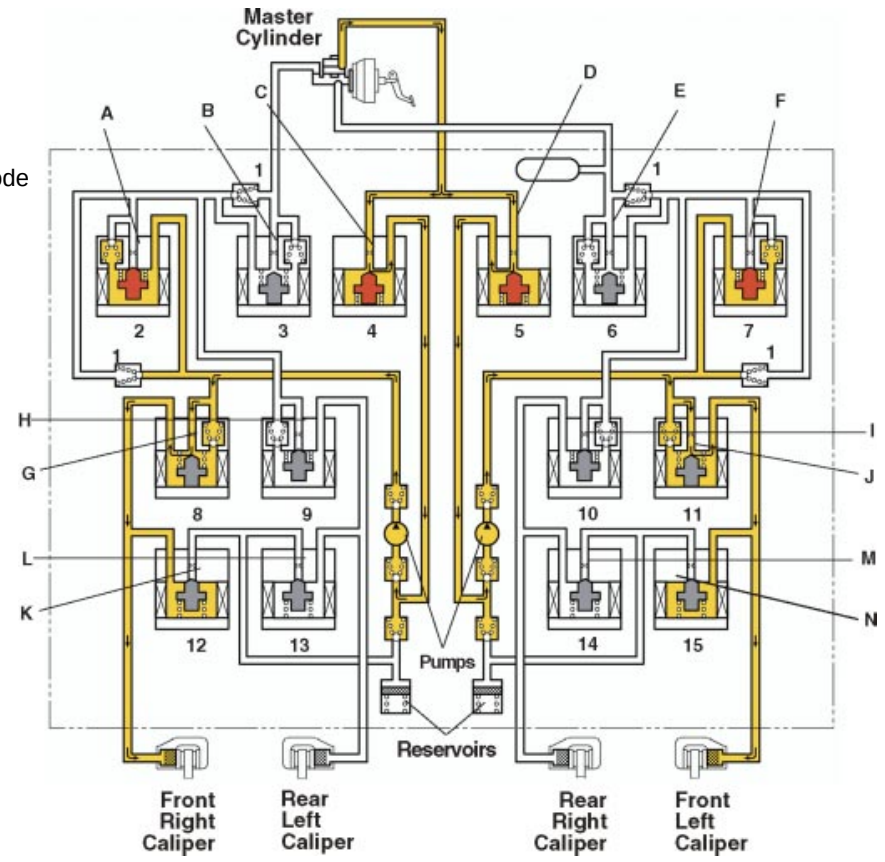

Fig. 4-198

The illustration and example shows the hydraulic circuit in **Pressure Increase** Mode with the TRAC System activated for demonstrational purposes.

NOTE

In other operating modes, the pressure holding valve and pressure reduction valve are turned ON/OFF according to the ABS operation pattern described previously.

Fluid pressure is generated by the pump.

Master Cylinder Cut Valve (Front # 2) is in the ON position and Port A and F (# 7) are closed. Master Cylinder Cut Solenoid Valve (Front & Rear # 3) is in the OFF position and Port B and E (# 6) are open.

Reservoir Cut Solenoid Valve (#4) is in the ON position and Port C and D (#5) are open.

Pressure Holding Valve (Front #8) is in the OFF position and Ports G and J (#11) are open and Pressure Holding Valve (Rear #9) is in the OFF position and Ports H and J (#10) are open.

Pressure Reduction Valve (Front #12) is in the OFF position and Ports K and N (#15) are closed and Pressure Reduction Valve (Rear #13) is in the OFF position and ports L and M (#14) are also closed.

Pressure increase to both front wheels is shown in the illustration.

Understeer Control (ES 300 Examples)

As indicated, understeer occurs when the front wheels of a vehicle lose their grip resulting in a plowing effect with possible loss of steering control. During understeer control, the ECU reduces throttle opening and applies the front brakes and rear inside brake (brake at the wheel of the inside of the turn).

VSC Understeer Control

Increase Mode

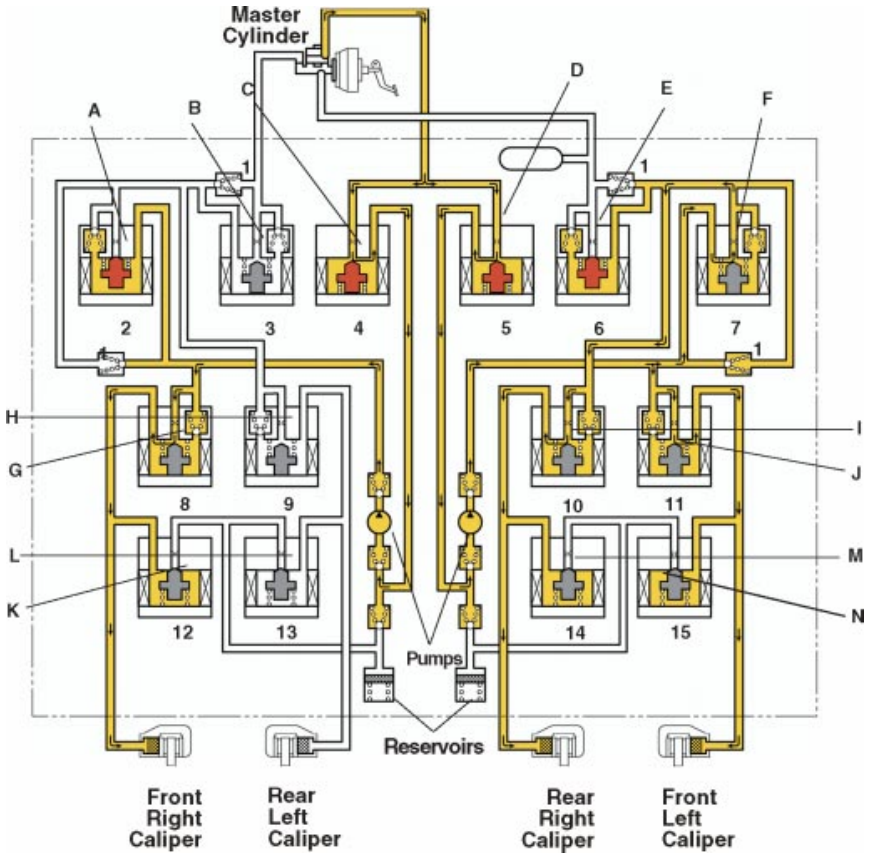

Fig. 4-199

Again, the illustration and example shows the hydraulic circuit in **Pressure Increase** Mode as it restrains an understeer condition while the vehicle makes a right turn for demonstrational purposes.

NOTE

In other operating modes, the pressure holding valve and pressure reduction valve are turned ON/OFF according to the ABS operation pattern described previously.

Fluid pressure is generated by the pump and regulated by the pressure regulator.

Master Cylinder Cut Solenoid Valve (Front Right # 2) is in the ON position and port A is closed. Master Cylinder Cut Solenoid Valve (Front Left, Rear Right #6) is in the ON position and port E is closed.

Master Cylinder Cut Solenoid Valve (Front Right, Rear Left #3) is in the OFF position and Port B is open. Master Cylinder Cut Solenoid Valve (Front Left # 7) is in the OFF position and Port F is open.

Reservoir Cut Solenoid Valve (#4) is in the ON position and Port C and D (#5) are open.

Pressure Holding Valve (Front # 8, Rear Left #9, and Rear Right #10) are all in the OFF position and Ports G and J (#11), H (#9) and I (#10) respectively are open.

Pressure Reduction Valve (Front #12, Real Left #13, and Rear Right #14 are all in the OFF position, however, Ports K and N (#15), Port L (#13), and Port M (#14) are all closed.

Pressure is increased to both front wheels and the rear right wheel (right turn) as shown in the illustration.

Oversteer Control

As indicated, oversteer occurs when the rear wheels of the vehicle lose their grip resulting in the vehicle fishtailing. During oversteer control, the ECU control engine output and applies brake pressure to the outside front and rear wheel.

VSC Oversteer Control

Increase Mode

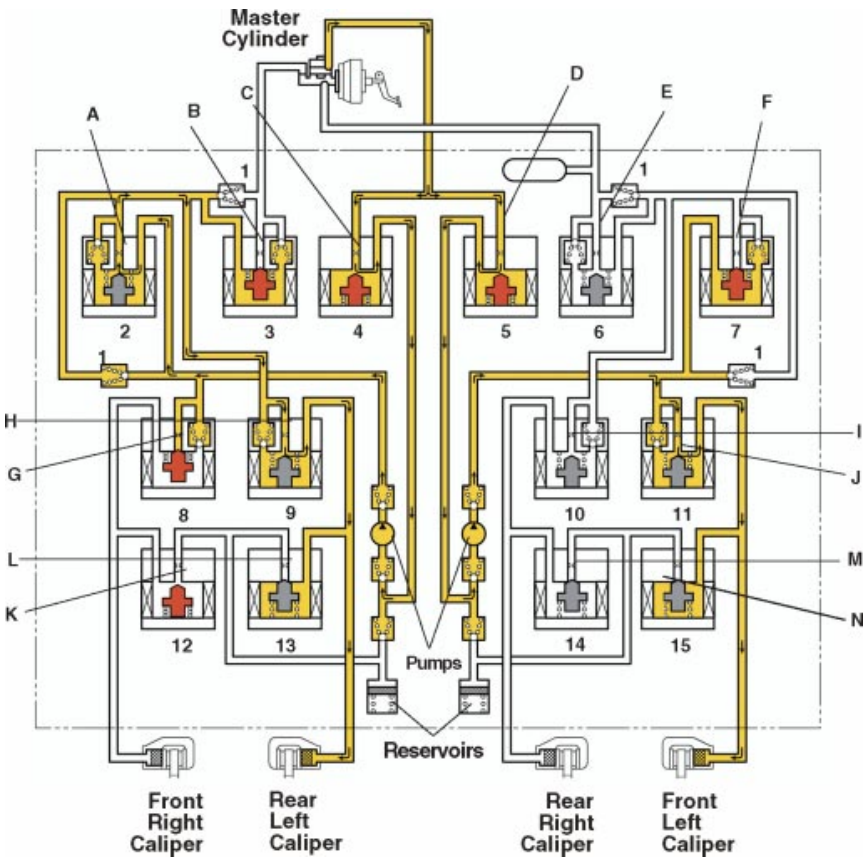

Fig. 4-200

The illustration shows the hydraulic circuit in **Pressure Increase** Mode as it restrains an oversteer condition while the vehicle makes a right turn.

NOTE

In other operating modes, the pressure holding valve and pressure reduction valve are turned ON/OFF according to the ABS operation pattern described previously.

Fluid pressure is generated by the pump.

Master Cylinder Cut Solenoid Valve (Front Right #2) is in the OFF position and Port A is open. Master Cylinder Cut Solenoid Valve (Front Left and Rear Right #6) is in the OFF position and Port E is open.

Master Cylinder Cut Solenoid Valve (Front Right and Left Rear #3) is in the ON position and Port B is closed. Master Cylinder Cut Solenoid Valve (Front Left #7) is in the ON position and Port F is closed.

Reservoir Cut Solenoid Valve (#4) is in the ON position and Ports C and D (#5) are both open.

Pressure Holding Valve (Front Right #8) is in the ON position with Port G closed, and Pressure Reduction Valve (Front Right #12) is in the ON position with Port K open. Both Pressure Holding and Reduction valves are turned ON to prevent the front brake on the inside of the turn from applying.

As a result wheel cylinder pressure is reduced to the front right wheel, held at the front left and rear left wheel. Thus, more pressure to the front and rear brakes on the outside of the turn is illustrated.

Initial Function Check & Self Diagnosis

The ABS & TRAC & VSC ECU performs an Initial Function Check of the system the first time the vehicle reaches 4 mph.

If the ABS & TRAC & VSC ECU detects a malfunction in the system, it illuminates the ABS warning light and the VSC warning light to alert the driver of a malfunction (or the malfunction will be indicated on the multi-information display if installed).

In the event that a failure occurs, a “fail safe” control has been developed and the brake and engine control reverts to normal brake and accelerator operation as without the ABS, TRAC, and VSC.

When a malfunction is detected, the ECU stores a code which can be accessed using the Lexus Diagnostic Tester or by using the Diagnostic Check Wire.

DTCs may be accessed using the Diagnostic Check Wire by jumping terminals Tc and E1 on DLC 1 or DLC 2. A Sensor Check is performed by jumping terminals Ts and E1 at DLC 1.

DTCs may be accessed and Active Tests of the sensors may be performed using the Lexus Diagnostic Tester. SAE OBD II style codes are displayed (C0200 and C1200 series).

Yaw Rate Sensor Zero Point Calibration & Yaw Rate Sensor Replacement

NOTE

A Zero Point Calibration must be performed in the following circumstances:

- When replacing the Yaw Rate Sensor Assembly (or if it has been disconnected).
- If the ECU is replaced.
- If the battery has been disconnected.

NOTE

The Calibration procedure is outlined in the Repair Manual.

Whenever using a Chassis Dynamometer, such as during an emissions check, the VSC should be turned OFF.

ETCS-i Operation

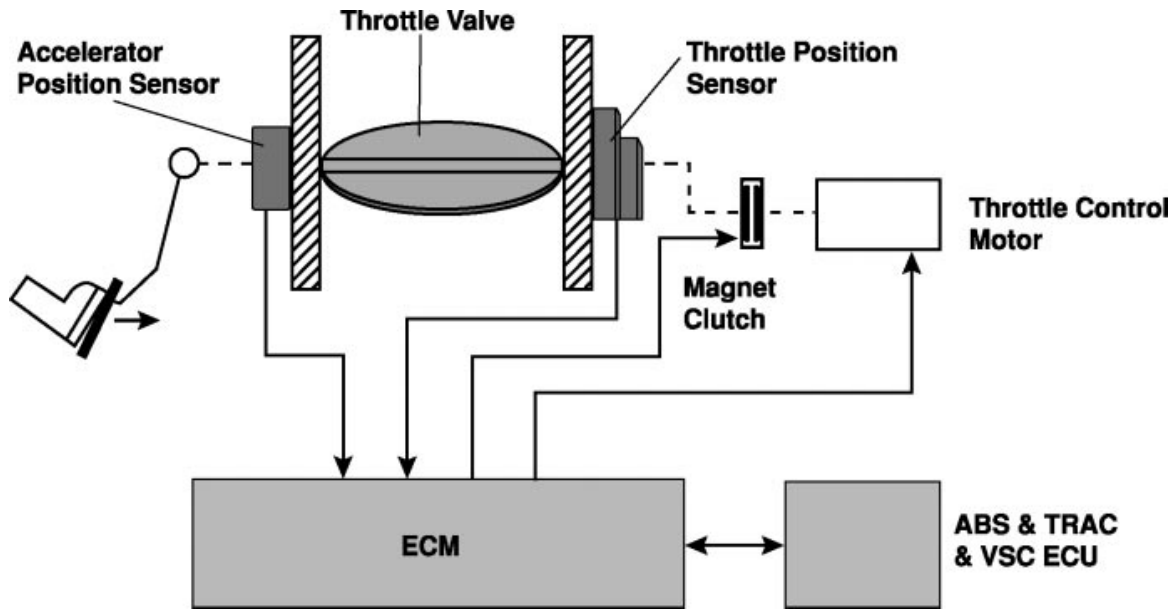

Fig. 4-201

Electronic Throttle Control System - Intelligent (ETCS-i)

The Electronic Throttle Control System with intelligence (ETCS-i) was developed to ensure smooth acceleration under a wide range of operating conditions. The system does this by controlling engine output proportional to accelerator response.

In a conventional throttle body, the throttle valve opening is determined by the amount of accelerator pedal effort exerted by the driver. The ECM in an Electronically Controlled System with intelligence, calculates the optimal throttle valve opening rate and position that is appropriate to the respective operating conditions. The appropriate operating conditions are determined based upon a feed back system of sensors (inputs to the ECM such as engine rpm, accelerator pedal effort, etc.) indicating the orientation of the vehicle to the road surface. Based upon these inputs, the ECM determines the acceleration required to provide smooth acceleration under all conditions regardless of the driver's input. The ECM uses a throttle actuator (DC motor) to control throttle opening.

On vehicle's equipped with Vehicle Skid Control (VSC), ETCS-i will adjust the throttle valve to maintain traction on acceleration.

For example, even if the driver accelerates suddenly from a stopped position, the ECM controls the throttle opening to achieve a smooth acceleration and reduce the undesirable inertial effects which would ordinarily result. The system's subtle control of engine output, goes relatively unnoticed, so that the driver maintains a sensation of acceleration control.

Even in potentially dangerous slippery snow conditions, stability can be maintained by setting the pattern select switch to "Snow Mode." With the "Snow" switch ON, engine output is reduced in relation to accelerator pedal effort. Thus, the driver will have to push further on the accelerator than normal to achieve a similar power output.

In conventional systems, a step motor type IAC valve was used for idle speed control (for fast idle under cold operating conditions and during idle-up). With ETCS-i, the throttle valve opening is performed by the throttle control motor.

Vehicle speed, previously controlled by the cruise control actuator, which opened and closed the throttle valve, is also controlled by the throttle control motor in an ETCS-i equipped vehicle. This eliminates the need for a separate cruise control system as cruise control strategies and functions are incorporated in the ECM.

Integrated control of the powertrain system reduces shock on acceleration as well as automatic transmission shock attributable to changes in speed. Throttle control is synchronized to the Electronically Controlled Transmission (ECT) during the shifting to reduce shift shock.

ETCS-i System

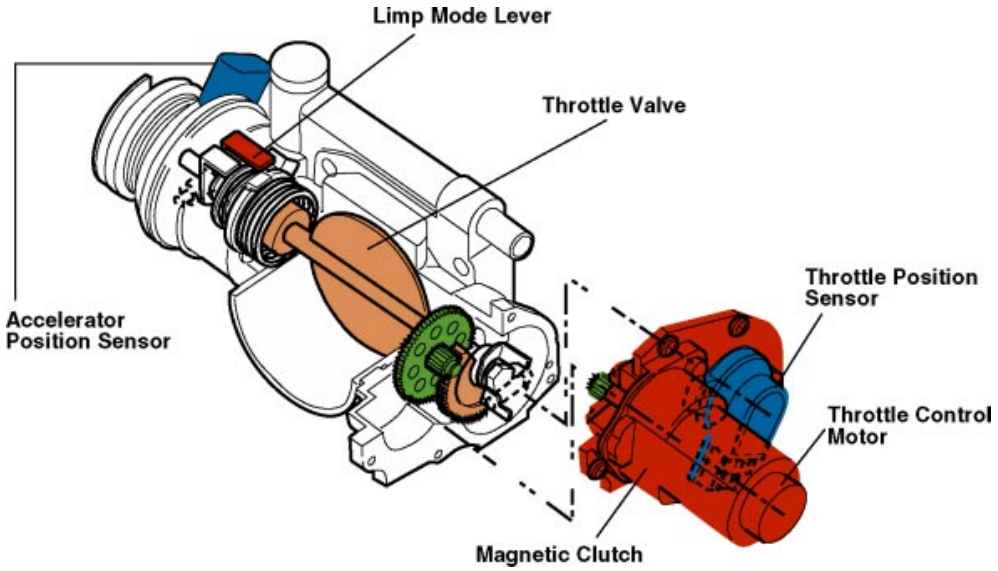

Fig. 4-202

ETCS-i System Operation

The Accelerator Pedal Position Sensor (APPS) is mounted on the throttle body. It is integrated in the throttle lever that is connected to a cable extended from the accelerator pedal.

With ETCS-i a duplicate sensor system is used. The Accelerator Position Sensor converts the amount of accelerator pedal effort into two types of electrical signals with distinct output characteristics. As the driver moves the accelerator pedal the APPS signal voltage changes indicating pedal position (VPA). VPA is use for control and a second signal, VPA2 for detecting malfunctions.

The Throttle Position Sensor (TPS) is used to detect the actual angle of the throttle valve. The throttle position sensor converts the throttle valve opening into electrical signals (VTA and VTA2). The throttle valve position and throttle valve angle information is transmitted to the ECM, and the throttle position sensor sends a signal back to the ECM and is used as a feed back signal.

Accelerator Position Sensor

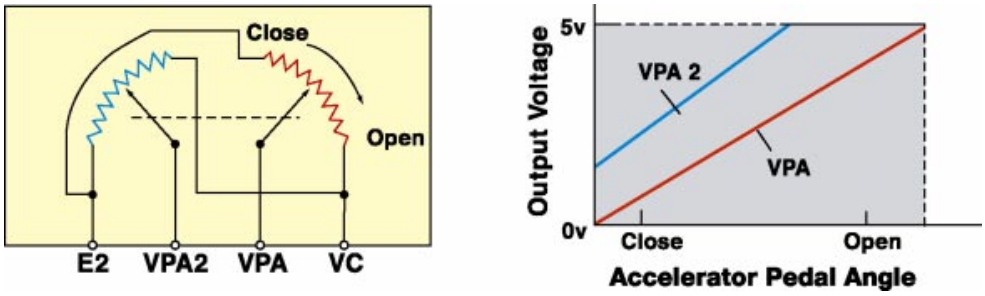

Fig. 4-203

The throttle motor (a DC motor) operates the throttle valve under the direction of the ECM which adjusts the throttle angle in response to engine and vehicle conditions. It does this by controlling the direction and amperage of the current through the motor. An electromagnetic clutch connects the throttle control motor to the throttle valve. The circuit is pulse width modulated (duty cycle regulated).

If there is a malfunction in the system, the ECM shuts the circuit (and clutch circuit) OFF, and the return spring closes the throttle valve.

NOTE

The ECM will turn the motor OFF if there is excessive amperage or not enough amperage in the motor circuit.

A thermostat is installed in the throttle body to shut off the flow of coolant when coolant temperature is high (180°). This prevents the throttle body from heating the intake air thereby reducing performance. The thermostat uses a wax expansion valve to open and close the coolant passage.

Throttle Body Thermostat

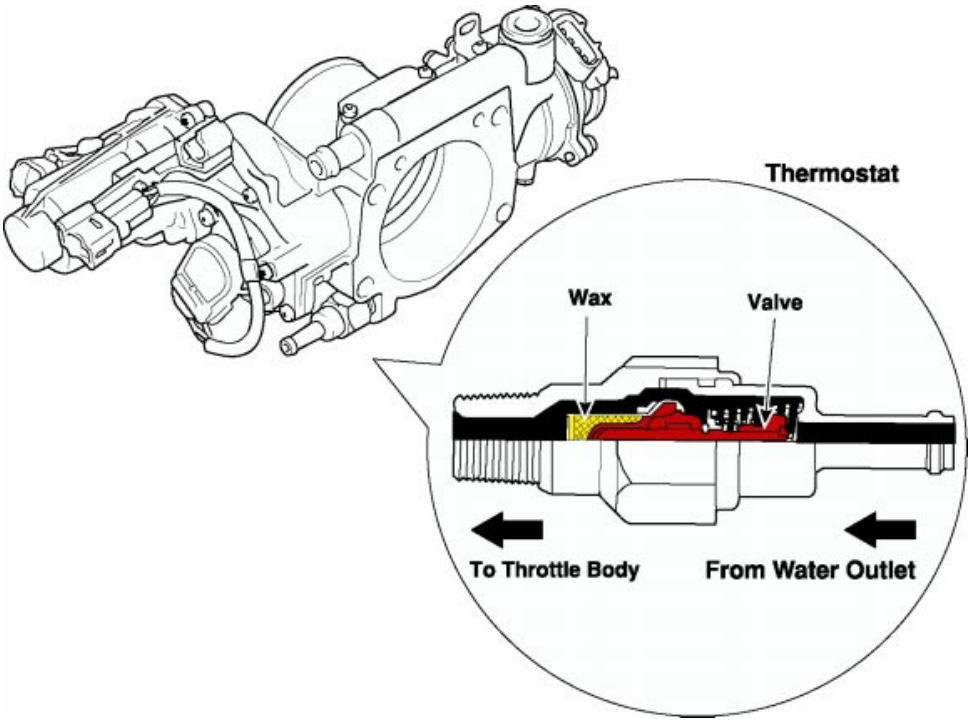

Fig. 204

If an abnormal condition occurs a MIL will illuminate to alert the driver. At the same time, current to the throttle control motor and magnetic clutch are cut off. With no power to the motor or magnetic clutch, the return spring closes the throttle valve. In this situation, called “limp mode,” the accelerator pedal operates the limp mode lever. When in limp mode, the throttle can only be partially opened reducing engine power. Additionally, ISC and cruise control systems will not operate.

WORKSHEET 4-1
Wireless Door Lock Control Programming

Vehicle	Year/Prod. Date	Engine	Transmission

Required Tools:

Vehicle equipped with Wireless Door Lock Remote Control System (key integrated type) Three or four wireless remotes (key integrated type)

All Lexus vehicles are equipped with a Wireless Door Lock Remote Control System with a key-integrated type transmitter. The remote may be programmed to a maximum of four recognition codes.

Training Objective: To provide the opportunity to practice Technical Information System (TIS) online research and to provide relevant practice programming the Wireless Door Lock Control System.

Technician Objective: At the conclusion of this worksheet you will be able to access procedural information about the Wireless Door Lock Control System on TIS and you will be able to:

- Register additional keys to the system while retaining previously registered codes
- Clear all previously registered codes and add a new key
- Confirm how many codes are registered in the system
- Prohibit key code registration to the System

1. Read the procedures to add, rewrite, confirm, and prohibit key codes (attached to this worksheet) first.
2. Following the procedure indicated for Confirmation Mode, confirm how many key codes are currently recognized to the system.
3. How many are registered? _____
4. Using the keys provided for the vehicle at your workstation, clear all registration codes from memory.
5. Re-register all but one of the keys to the system.
6. Approach your instructor to confirm that all but one key is registered to the system. Instructor's initials _____
7. Register the one unregistered key (above) to the system.
8. Access TSIB SS004-99 "Alternate Method to Register Wireless Recognition Codes" and TSIB SS005-99 "Special Precautions for Registering Wireless Recognition Codes" on the Technical Information System (TIS).
9. Print TSIB SS004-99 and TSIB SS005-99 and retain them for later use in this course.

When you have completed this worksheet, you should have acquired the skills to register keys to the Wireless Door Lock Control System. You should also have had the opportunity research and print two TSIBs from TIS.

If you have any doubts about your understanding of the material or your skills, please review your work. Once you are confident of your skills, have your instructor verify your work.

Procedures For:

- **Adding Key Codes,**
- **Clearing Registration Memory**
- **Confirming The Registered Number of Key Codes**
- **Disabling The System**

SET - UP

- Remove the key from the ignition
- Close and lock all doors
- Manually unlock and open the driver's door

ADD MODE

This procedure is used to register additional key code(s) while retaining previously registered key codes.

1. Insert the key in the ignition and, then remove it.
2. Press the driver's power door lock switch, **LOCK to UNLOCK**, 5 times.
3. Close and open the driver's door.
4. Press the driver's power door lock switch, **LOCK to UNLOCK**, 5 times.
5. Insert the key in the ignition and cycle the key from **LOCK** to **ON** to **LOCK**.
6. Remove the key from the ignition.

The power door lock switch will respond by automatically cycling from **UNLOCK to LOCK to UNLOCK** confirming **ADD MODE**.

7. Press the key's lock and unlock buttons simultaneously, then release.
8. Press either the key's lock or unlock button for one second.

The power door lock switch will automatically cycle from **UNLOCK to LOCK** indicating the following:

- **ONCE** to confirm that registration was complete.
- **TWICE** to indicate that the registration was unsuccessful.

9. Additional key codes may be registered by repeating steps 7 and 8 above.

Note: A maximum of four keys may be registered to the system. If the number of registered codes exceeds four, previously registered codes are erased in order, starting from the first registered code.

REWRITE MODE

This procedure is used to clear all previously registered key codes and then, to register new key code(s).

1. Insert the key in the ignition and, then remove it.
2. Press the driver's power door lock switch, **LOCK to UNLOCK**, 5 times.
3. Close and open the driver's door.
4. Press the driver's power door lock switch, **LOCK to UNLOCK**, 5 times.
5. Insert the key in the ignition and cycle the key **TWICE** from **LOCK to ON**.
6. Remove the key from the ignition.

The power door lock switch will respond by automatically cycling **TWICE** from **UNLOCK to LOCK** confirming **REWRITE MODE**.

7. Press the key's lock and unlock buttons simultaneously, then release.
8. Press either the key's lock or unlock button for one second.

The power door lock switch will automatically cycle from **UNLOCK** to **LOCK** indicating the following:

- **ONCE** to confirm that registration was complete.
- **TWICE** to indicate that the registration was unsuccessful.

9. Additional key codes may be registered by repeating steps 7 and 8 above.

CONFIRMATION MODE

This procedure is used to check how many key codes are currently registered. **Note**: Begin with the vehicles door open.

1. Insert the key into the ignition and then remove it.
2. Press the power door lock switch, **LOCK** to **UNLOCK**, 5 times.
3. Close and open the driver's door.
4. Press the driver's power door lock switch, **LOCK** to **UNLOCK**, 5 times.
5. Insert the key in the ignition and cycle the key **THREE TIMES** from **LOCK** to **ON**.
6. Remove the key from the ignition.

The power door lock switch will respond by automatically cycling from UNLOCK to LOCK one to four times to indicate the number of key codes registered.

PROHIBITION MODE

This procedure is used to clear all previously registered key codes and disable the wireless door lock operation. This mode is useful when the customer loses the wireless door lock transmitter keys. The System can be enabled by using the ADD MODE to add a key.

1. Insert the key into the ignition and then remove it.
2. Press the power door lock switch, **LOCK** to **UNLOCK**, 5 times.
3. Close and open the driver's door.
4. Press the driver's power door lock switch, **LOCK** to **UNLOCK**, 5 times.
5. Insert the key in the ignition and cycle the key **FIVE TIMES** from **LOCK** to **ON**.
6. Remove the key from the ignition.

The power door lock switch will respond by automatically cycling from **UNLOCK** to **LOCK** five times to indicate Prohibition Mode has been successful.

Notes

Wireless Door Lock Control Programming

Name: _____ Date: _____

Review this sheet as you are doing the Wireless Door Lock Control Programming worksheet. Check either category after completing the worksheet and instructor presentation. Ask the instructor if you have questions. The comment section is for you to write notes on where to find the information, questions, etc.

I have questions

I know I can

Objectives/Tasks			Comment
Register additional keys to system while retaining previously registered codes.			
Clear all previously registered codes and add a new key.			
Confirm how many codes are registered in the system.			
Prohibit key code registration to the system.			
Research and print TSIB's from TIS.			

Instructor's Concurrence: _____

Notes

WORKSHEET 4-2
HomeLink® Universal Transmitter/Transceiver

Vehicle	Year/Prod. Date	Engine	Transmission

Required Tools:

- Vehicle equipped with HomeLink® Universal Transmitter/Transceiver
- Appropriate Owners Manual
- Appropriate Repair Manual
- Device Transmitter
- Garage Door Opener with Rolling Code Feature or appropriate simulator

The HomeLink® Universal Transmitter/Transceiver provides a convenient way integrate up to three hand-held transmitters into a single device.

As a Lexus Technician, you may be asked to program the transmitter for the customer. You may also be asked to program the “rolling code” feature between the “garage door opener motor head unit” at the customer’s home and the HomeLink system.

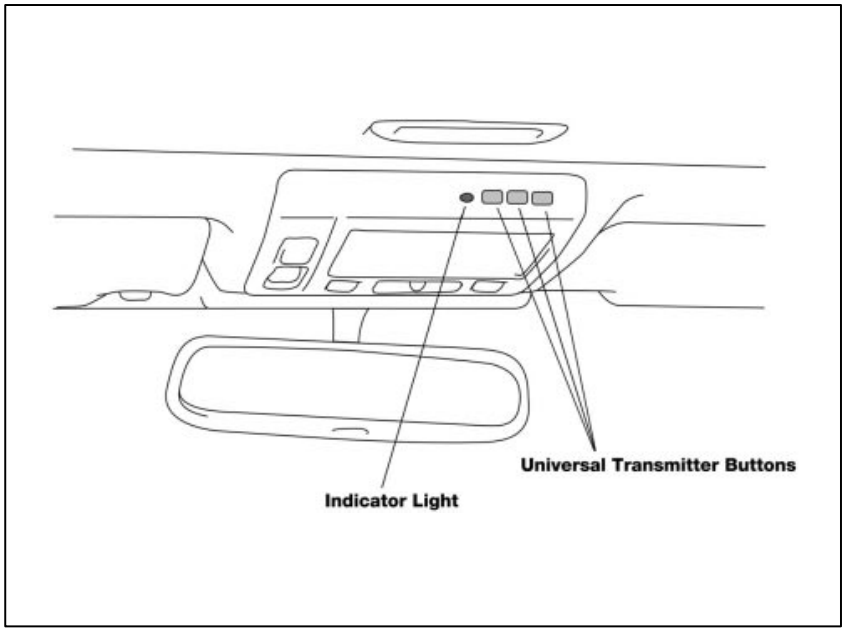

Training Objective: To provide relevant practice and skill verification with HomeLink® Universal Transmitter programming and erasing of codes.

Technician Objective: At the conclusion of the worksheet using HomeLink®, you will be able to:

- Program codes.
- Train a rolling code system.
- Erase codes.

HomeLink® Universal Transmitter Programming

1. Prepare for programming the HomeLink® Universal Transmitter by erasing the three factory default codes.
2. What two buttons are depressed when erasing the factory codes?

   _____

3. Did the indicator light flash?

   _____

4. If the indicator light flashed, what does it mean?

   _____

5. Program the HomeLink® Universal Transmitter of the vehicle at your workstation.
6. What does the rapidly flashing light indicate during the programming procedure?

   _____

Rolling Code Programming

7. Locate the training button on the garage door opener motor head unit.
8. Depress the “training” button on the garage door opener motor head unit.
9. How much time do you have between the time you depress the training button on the garage door opener motor head unit until the time you depress and release the HomeLink button?

   _____

10. What is the last step to complete the programming process?

    _____

11. Can the original hand-held transmitter be used to open the garage door after HomeLink has been programmed?

    _____

12. What are the two steps for erasing the programmed HomeLink Buttons?

    _____

    _____

13. Can individual buttons be erased?

    _____

14. Reference the Repair Manual for the vehicle at your workstation. The HomeLink® system is not applicable to certain garage door openers, what is the criteria?

    _____

15. How can you determine if a garage door opener has a rolling code system?

_____

_____

_____

_____

_____

You have now completed this worksheet. You should have acquired the skills to program the HomeLink® Universal Transmitter/Transceiver and to erase previous programming. If you have any doubts about your understanding of the material or your skills, please review your work. Once you are confident of your skills, have your instructor verify your work.

Notes

HomeLink® Universal Transmitter/Transceiver

Name: _____ Date: _____

Review this sheet as you are doing the HomeLink® Universal Transmitter/Transceiver worksheet. Check either category after completing the worksheet and instructor presentation. Ask the instructor if you have questions. The comment section is for you to write notes on where to find the information, questions, etc.

I have questions

I know I can

Objectives/Tasks			Comment
Program codes.			
Train a Rolling Code to the System.			
Erase codes.			
Determine if a garage door opener has a Rolling Code System.			
Determine which garage doors are NOT applicable for HomeLink®			

Instructor's Concurrence: _____

Notes

WORKSHEET 4-3
Battery Analyzer

Vehicle	Year/Prod. Date	Engine	Transmission

Required Tools:

- Lexus Battery Tester
- Vehicle

Lexus recommends testing the battery using the Midtronics MicroPro 815T Digital Battery Analyzer. The analyzer can accurately evaluate the condition of a battery in 5.6 seconds. It has two advantages over other methods of battery testing.

- In most cases, it is not necessary to charge a battery before making a decision about the condition.
- The warranty code is generated if replacement is necessary.

Training Objective: To introduce the battery tester.

Technician Objective: Utilize the battery tester.

Using the Midtronics MicroPro 815T Digital Battery Analyzer follow the procedures outlined below to test the battery of the vehicle assigned to you and answer the questions that follow.

1. Remove the key from the ignition, close all doors, and turn all electrical accessories OFF.

2. Remove any surface charge from the battery by turning ON the high beams for 60 seconds and then let the battery voltage recover for 60 seconds.

Connect Tester

3. Attach the tester clamps to the clean battery posts (red on positive, black on negative). The tester will display four zeros indicating a good connection or will not illuminate indicating a poor connection.

Note: The tester clamps may be placed on the battery cables, however keep in mind, if resistance exists between the battery cables and posts, an inaccurate test result may ensue. If your test results are anything other than “Good return to service,” disconnect the battery cables and retest.

To prevent loss of programmed data of radio presets or other memory sensitive ECUs, connect a jumper wire in parallel with the battery terminal and the post. If you do not use a jumper wire, remember to reset the clock, radio, or any other memory sensitive component to its original settings.

Set Test Mode

4. The test mode may be set to “After Charge” (testing after charging) or “Cold Battery” (battery temperature 32° F or lower). An LED will illuminate to indicate your selection.

Perform Test

5. Since you are testing an OE (original equipment) battery:
   - select the appropriate “STK#” from the Technician Reference Card (found in the flap of the tester cover)
   - input the STK# using the keypad
   - depress the STK# key to begin the test

Obtain Results

6. The condition of the battery and appropriate action to take is indicated adjacent to an illuminated LED on the face of the tester in the “Battery Condition Area.” Battery should indicate “Good return to service.”

7. Record your test results on the RO and answer the questions that follow.

Questions

8. What was the voltage reading on the vehicle at your workstation?
   _____ volts

9. What STK# did you input to the tester? STK# = _____

10. Indicate the STK# that should be entered into the tester for the following models with an OE battery:
    a. GS 300 _____
    b. SC 400 _____
    c. LX 470 _____

11. What would you enter into the tester if the battery were an after-market battery?

    _____

12. Where is the information above found?

    _____

13. What would you enter if no rating were available?

    _____

14. If you were conducting a PDS on a new Lexus and your test results were “Replace,” why is it important to input the STK# Code?

    _____

You have now completed this worksheet. You should have acquired the skills to use the Midtronics MicroPro 815T Digital Battery Analyzer to confirm good battery condition during PDS. If you have any doubts about your understanding of the material or your skills, please review your work. Once you are confident of your skills, have your instructor verify your work.

WORKSHEET 4-4
LEXUS DIAGNOSTIC TESTER (SCAN TOOL)
Part 1: Diagnostic Trouble Codes

Vehicle	Year/Prod. Date	Engine	Transmission

Required Tools:

- Vehicle
- Appropriate Repair Manual
- Fender Covers & Floor Mats
- Lexus Diagnostic Tool Set
- Lexus Serial Printer
- Diagnostic Tool Set Manual
- Hand Tools
- Shop Towels

The Lexus Diagnostic Toolset consists of a hand-held Diagnostic Tester and various attachments. It was developed to assist in the diagnosis of automotive electrical systems and provides many diagnostic applications for one tool.

For the purpose of this worksheet, you will be introduced to the hand-held Diagnostic Tester, or Scan Tool, and select program cards. **Training Objectives:** To provide relevant practice and skill verification with the Lexus Diagnostic Hand-Held Tester retrieving and displaying MIL Codes, erasing MIL Codes, utilizing the printer, performing Active Tests, and using C-BEST software applications to provide electronic system customization for the Lexus customer.

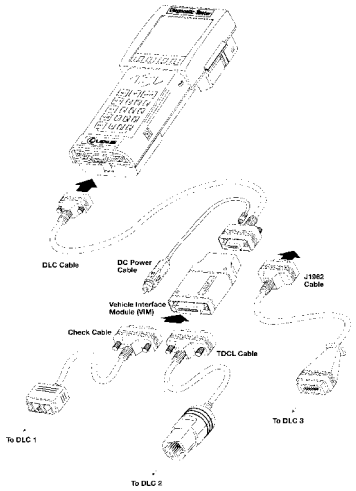

Technician Objective: At the conclusion of this worksheet you will be able to use the Lexus Diagnostic Hand-Held Tester to:

- Navigate through menu's
- Retrieve MIL codes
- Erase MIL codes
- Connect and use the printer to print data lists and graphic displays
- Display Data Lists and perform Active Test
- Modify body electronic system operations using the Customizable Body Electronics System (C-BEST)

Checking For DTCs

1. With the vehicle's ignition switch in the OFF position, install the correct program card into the Tester.
   Note: When removing program cards, be sure the Tester is in the OFF position.
2. Which program card are you using to retrieve MIL Codes?

   _____

3. Where is the I/O Cartridge located on the Tester?

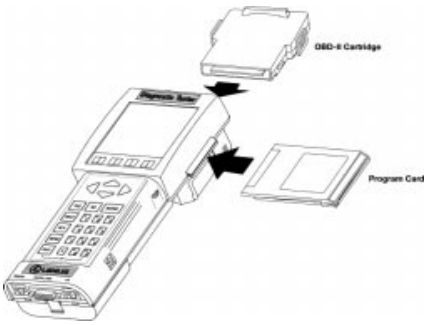

4. Should this cartridge be left in the Tester when performing other functions?

   _____

5. Connect the Data Link Connector (DLC) Cable to the Data Link connector of the Tester.

6. Connect the other end of the DLC Cable to the correct interface cable appropriate to the vehicle and functions you want to test.

7. Which cable will you require for the vehicle assigned to you?

   _____

8. Connect the other end of the Cable above to the DLC connector in the vehicle.

9. Where is this connector located in the vehicle assigned to you?

   _____

10. Connect the RS232 Printer Cable to the RS232 connector on the Tester.

11. Connect the Printer AC/DC Adapter to the printer and plug it into a 110 V wall receptacle.
    Note: Be sure the power switch is in the OFF position when plugging the adapter into the power supply.

12. Turn the ignition switch of the vehicle ON.

13. Turn ON the power switch of the printer.

14. Depress the ON key of the Tester.

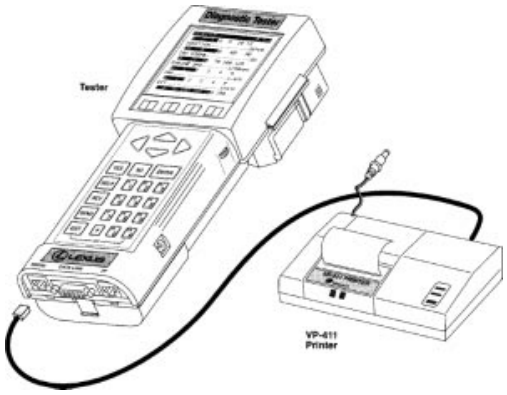

Retrieving Codes

15. Check for Codes. Follow the correct procedure using the Hand-Held Tester on the vehicle assigned to you.

Check the Lexus Diagnostic Tester Operator's Manual if you have any uncertainty about the proper procedures when checking for Diagnostic Trouble Codes.

```
FUNCTION SELECT

1: OBD/MOBD
2: ENHANCED OBD II
3: CARB OBD II
4: BREAK-OUT BOX
5: NVH
6: AUTOPROBE
7: O2 RPM CHECK
8: SNAPSHOT REVIEW
9: SETUP
0: GAS ANALYSIS
```

```
FUNCTION SELECT

1: OBD/MOBD
2: ENHANCED OBD II
3: CARB OBD II
4: BREAK-OUT BOX
5: NVH
6: AUTOPROBE
7: O2 RPM CHECK
8: SNAPSHOT REVIEW
9: SETUP
0: GAS ANALYSIS
```

16. If codes were in memory, approach your instructor for direction.

Now that you have substantiated that the vehicle has no stored codes, you will be intentionally initiating some codes.

Throttle Position Sensor (TPS)

17. Start the vehicle assigned to you.

18. Disconnect the Throttle Position Sensor, then reconnect the connector.

19. Check for codes.

Attach your print out in the box below

20. Did a MIL illuminate on the dash?

_____

21. Did the light illuminate continuously or is it flashing?

_____

22. What does a flashing MIL indicate?

_____

Hint: See Repair Manual section DI - Diagnostic Trouble Code Chart.

23. Did the Tester identify a Diagnostic Trouble Code?

_____

24. Print the screen and attach the print-out in the space provided at the right.

25. Is the DTC an SAE controlled code or a Manufacturer controlled code?

26. How do you know?

_____

_____

Freeze Frame Data

Note: Another piece of information available to you is called freeze frame data.

27. Select freeze frame data by depressing the ENTER key on your Tester. It should be similar to the screen shown to the right.

The ECU saves information about the state of the vehicle when a DTC occurs. This information is referred to as Freeze Frame Data and can be accessed by the Tester.

```
TROUBLE CODE   P0110
CALC LOAD·········0%
ENGINE SPD·····0rpm
COOLANT TEMP132.8°F
INTAKE AIR···-40.0°F
CTP SW·········OFF
VEHICLE SPD·····0MPH
SHORT FT #1·····-0.1%
LONG FT #1·····10.9%
SHORT FT #2·····-0.1%
LONG FT #2·····10.9%
FUEL SYS #1·····OL
```

28. Print the Freeze Frame Data for the vehicle assigned to you and attach it in the space provided.

Attach your print out in the box below

Clearing Codes

29. Return to the “Trouble Data Menu.”

30. Select 2: Clear Codes.

31. Touch ENTER.

32. Select YES to clear DTCs.

33. Touch ENTER to return to the “Trouble Data Menu.”

Mass Air Flow Meter

34. With the vehicle’s ignition ON, disconnect the Mass Air Flow Meter, then reconnect it.

35. Check for codes.

36. Did a MIL Light illuminate on the dash?

Attach your print out in the box below

_____

37. Did the light illuminate continuously or is it flashing?

_____

38. Did the Tester identify any Diagnostic Trouble Codes?

_____

39. Print the screen and attach the print-out in the space provided to the right.

40. Is the DTC an SAE controlled code or a Manufacturer controlled code?

_____

41. How many codes provided freeze frame data?

_____

42. Clear the code.

You have now completed this portion of the worksheet. You should have acquired the skills to use the Lexus Diagnostic Hand-Held Tester to:

- Navigate through menus.
- Retrieve MIL codes.
- Erase MIL codes.
- Connect and use the printer to print data lists and graphic displays.

If you have any doubts about your understanding of the material or your skills, please review your work. Once you are confident of your skills, have your instructor verify your work.

Notes

Lexus Diagnostic Tester (Scan Tool) Part 1 Diagnostic Trouble Codes

Name: _____ Date: _____

Review this sheet as you are doing the Lexus Diagnostic Tester Part 1 Diagnostic Trouble Codes worksheet. Check either category after completing the worksheet and instructor presentation. Ask the instructor if you have questions. The comment section is for you to write notes on where to find

I have questions

I know I can

Objectives/Tasks			Comment
Navigate through menus.			
Retrieve MIL codes.			
Erase MIL codes.			
Connect printer to the Diagnostic Tester and power source.			
Use the printer to print Data Lists and graphic displays.			
Display Data Lists and perform Active Tests.			
Describe what Freeze Frame Data is.			

Instructor's Concurrence: _____

Notes

WORKSHEET 4-5
LEXUS DIAGNOSTIC TESTER (SCAN TOOL)
Part 2: Active Test & Data List

Vehicle	Year/Prod. Date	Engine	Transmission

Required Tools:

- Any OBD/MOBD equipped Vehicle
- Appropriate Repair Manual
- Fender Covers & Floor Mats
- Lexus Diagnostic Tester
- Lexus Serial Printer
- Diagnostic Tool Set Manual
- Hand Tools
- Shop Towels

Active Test

Active Test is a function of the Diagnostic Tester that allows you to test actuator circuits by observing input sensor values while the actuators are operated. This feature can be very useful during diagnosis, it can assist you to eliminate circuits/components quickly and easily and narrow down the origin of a problem. While the **Active Test** function can be used to operate the system actuators and components to confirm the output portion of a circuit, the **Data List** function can be used to monitor input signals to the system. We will be dealing with Active Test first in this exercise and later with the Data List function. Using the Lexus Diagnostic Tester, you can diagnose Body, Chassis, and other non-powertrain systems that use the Multiplex-OBD (M-OBD) protocol.

Vehicle networking involving time division is also known as multiplexing. It is a method for transferring data among distributed electronic modules via a serial bus. The serial data (information that is digitally coded and transmitted in a series of data words) is sent to individual control modules that control each function. You will be working with the Body Control Module in the exercise that follows.

Note: If one of the following functions below is not available on the vehicle at your workstation, indicate “N/A” on your worksheet.

Power Seat Actuation

1. With the vehicle’s ignition switch in the OFF position, install the correct program card into the Tester.

Note: When removing program cards, be sure the Tester is in the OFF position.

2. Which program card are you using?

_____

Hint: If you have any difficulty performing the steps outlined below, consult the Lexus Diagnostic Toolset Operator’s Manual as a reference.

3. Connect the correct Diagnostic Tester DLC Cable to the appropriate DLC Connector in the vehicle at your workstation.

4. Provide the information requested below:
   a. Which DLC Cable did you use?

      _____

   b. Which DLC Connector did you access?

      _____

   c. Where is the DLC Connector located in the vehicle?

      _____

5. Connect the serial printer in-line with the Diagnostic Tester.
6. Turn the ignition switch of the vehicle to the ON position and the power switch of the printer ON.
7. Turn the Diagnostic Tester ON.

DATA LIST

8. Follow the procedures outlined below:
   - From the FUNCTION SELECT menu, select **OBD/MOBD**.
   - From the OBD/MOBD menu, select **SEAT**.
   - Select **CURRENT DATA** from the DIAGNOSTIC MENU SEAT.
   - Select **DATA LIST** from the CURRENT DATA menu.
   - A SELECT DATA menu will appear, select **ALL** from the SELECT DATA menu.
9. All of the data items reported by the vehicle's controllers are displayed in a Data List format. Make a print-out of all of the available Data List by depressing the SEND key (screen print) on the Diagnostic Tester. Retain these print-outs with this worksheet.

Attach your print outs in the box below

Reclining Feature Actuation

10. Return to the DIAGNOSTIC Menu, “Seat.”

11. Select TEST DATA.

12. Select ACTIVE TEST from the TEST DATA menu.

13. Select **RECLINING** from the SELECT DATA menu. The parameters associated with the Active Test are displayed in the Data List format.

14. Select ALL.

15. Use the UP and DOWN “Arrow Keys” on the Diagnostic Tester keyboard to select “Reclining SW Front” by highlighting the selection.

16. Use the LEFT and RIGHT “Arrow Keys” on the Tester keyboard to change the parameter value.

17. Manipulate the “recline” feature of the front seat.

Headrest Feature Actuation

18. Follow the same procedure above, however this time select **HEADREST** from the SELECT DATA menu.

19. Manipulate the headrest using the Diagnostic Tester.

Speedometer Actuation

20. Return to the OBD/MOBD menu. Follow the procedures outlined below:

    - Select **METER** from the OBD/MOBD menu.
    - Select **TEST DATA** from the DIAGNOSTIC MENU.
    - Select **ACTIVE TEST** from the TEST DATA menu.
    - Select **SPEEDOMETER** from the SELECT DATA menu.

21. Use the **UP** and **DOWN** “Arrow Keys” on the Diagnostic Tester keyboard to select “SPEEDOMETER” by highlighting the selection. Use the **LEFT** and **RIGHT** “Arrow Keys” on the Tester keyboard to change the parameter value.

22. Manipulate the Speedometer.

Fuel Gauge Actuation

23. Follow the same procedure described above, however, this time select FUEL GAUGE at the SELECT DATA menu.

24. Manipulate the fuel gauge.

Air Conditioning Codes **Attach your print out in the box below**

25. Follow the procedure outlined below:
    - From the OBD/MOBD menu, select AIR CONDITIONING.
    - From the Diagnostic menu, select TROUBLE DATA.
    - From the TROUBLE DATA menu, select CODES/FREEZE.
26. Print the DTCs and attach the print-out in the space provided.
27. Are the DTCs SAE controlled, or Manufacturer controlled?

    _____

28. Clear the Codes using the Diagnostic Tester.
29. Recheck to see that the codes have been cleared.
30. Print the screen with the DTCs again.
31. Reference the Diagnostic Trouble Code Chart in the Repair Manual appropriate to the Air Conditioning System.
32. In what section of the Repair Manual is the Diagnostic Trouble Code Chart found?

    _____

33. The Diagnostic Trouble Code Chart directs you to the page(s) where the inspection procedure(s) for each circuit can be found. Access the inspection procedures for each of the DTCs.

Notice that there is a special note under the "DTC No." column for both of the procedures.

34. Give consideration to the items listed below and answer the question that follows:
    - the special notice listed in the "Detection Item" column of the procedure
    - the conditions under which you are conducting this test

Why are these DTCs reappearing after they have been cleared?

_____

_____

_____

You have now completed this portion of the worksheet. You should have acquired the skills to use the Lexus Diagnostic Hand-Held Tester to access and perform Active Test function.

If you have any doubts about your understanding of the material or your skills, please review your work. Once you are confident of your skills, have your instructor verify your work.

Lexus Diagnostic Tester (Scan Tool) Part 2 Active Test & Data List

Name: _____ Date: _____

Review this sheet as you are doing the Lexus Diagnostic Tester Part 2 Active Test & Data List worksheet. Check either category after completing the worksheet and instructor presentation. Ask the instructor if you have questions. The comment section is for you to write notes on where to find the information, questions, etc.

I have questions

I know I can

Objectives/Tasks			Comment
Install the correct program card into the Tester.			
Test actuator circuits by observing input sensor values while the actuators are operated.			
Define Multiplexing.			
Diagnose Body, Chassis, and other non-powertrain systems that use the Multiplex- OBD (MOBD) protocol using the Diagnostic Tester.			

Instructor's Concurrence: _____

Notes

WORKSHEET 4-6
DIAGNOSTIC TESTER (SCAN TOOL)
Part 3: Electronically Modulated Air Suspension

Vehicle	Year/Prod. Date	Engine	Transmission

Required Tools:

- LS 400 Vehicle equipped with EMAS
- Appropriate Repair Manual
- Fender Covers & Floor Mats
- Lexus Diagnostic Tester
- Diagnostic Tool Set Manual
- Hand Tools
- Shop Towels

Electronically Modulated Air Suspension

The LS 400 has an optional suspension system unique to the Lexus Model Line. The Lexus Electronically Modulated Suspension System (EMAS) is actually two independent systems working together to provide three separate functions. Pneumatic springs provide both computer and manual control of the vehicle's height and spring rate while computerized shock absorbers are integrated to provide a totally adjustable suspension system.

The Lexus Diagnostic Tester allows you to conduct Height Simulation Tests on the Electronically Modulated Air Suspension System. These simple tests can save you a lot of time during a diagnostic investigation of the system by:

- Providing an easy way to select which wheel will be tested and the direction (UP or DOWN) the vehicle body will travel for the test
- Displaying height data and valve positions for each wheel during the test
- Including a timer to keep track of how long the test has run for each wheel
- Displaying the status of the compressor motor and exhaust valve solenoid during the test

In brief the test allows you to view the output portion of the circuit and thereby eliminate many of its components as the source of a problem in the system.

Accessing DATA LIST with the Diagnostic Tester will allow you to monitor the input signals to a system while the components of the system are manipulated.

Both tests can aid in diagnosing a problem and avoid unnecessary component testing and tear-down procedures.

1. Connect the appropriate Data Link Connector Cable to the vehicle at your workstation.
2. Which DLC Cable Connector are you using?

   _____

   _____

3. Is a Vehicle Interface Module required when using the DLC Cable Connector?

   _____

4. Connect the DLC Cable to the DLC Connector in the vehicle at your workstation.

5. Which DLC Connector are you accessing and where is it located?

   _____

6. Start the vehicle.

7. Turn ON the Diagnostic Tester.

8. From the OBD/MOBD menu, select **AIR SUSPENSION**.

9. From the AIR SUSPENSION menu, select **HEIGHT SIM. TEST**

10. Use the UP and DOWN “arrow keys” of the Diagnostic Tester keyboard to select the wheel you wish to test (select Fr LH [front - left hand side] for this worksheet).

11. Use the RIGHT and LEFT “arrow keys” of the Diagnostic Tester keyboard to select the direction you wish to move the vehicle.

12. Select **YES** to confirm that you wish to start the Air Suspension Height Simulation Test.

13. Conduct an Air Suspension Height Simulation Test.

14. Run a second Air Suspension Height Simulation Test, however, this time, select Rr LH and RH.

You have now completed this portion of the worksheet. You should have acquired the skills to use the Lexus Diagnostic Hand-Held Tester to conduct Height Simulation Tests on the Electronically Modulated Air Suspension System of the LS 400.

If you have any doubts about your understanding of the material or your skills, please review your work. Once you are confident of your skills, have your instructor verify your work.

Lexus Diagnostic Tester (Scan Tool) Part 3 Electronically Modulated Air Suspension

Name: _____ Date: _____

Review this sheet as you are doing the Lexus Diagnostic Tester Part 3 Electronically Modulated Air Suspension worksheet. Check either category after completing the worksheet and instructor presentation. Ask the instructor if you have questions. The comment section is for you to write notes

I have questions

I know I can

Objectives/Tasks			Comment
Conduct a Height Simulation Test on a Electronically Modulated Air Suspension System.			
Display Height Data and Valve Positions for each wheel during the test.			
Display the status of the compressor motor and exhaust valve solenoid during the test.			
Display the status of the compressor motor and exhaust valve solenoid during the test.			
Identify which DLC Cable Connector to use.			

Instructor's Concurrence: _____

Notes

WORKSHEET 4-7
LEXUS DIAGNOSTIC TESTER (SCAN TOOL)
Part 4: Customized Body Electronic System (C-BEST)

Vehicle	Year/Prod. Date	Engine	Transmission

Required Tools:

- Vehicle equipped with C-BEST
- C-BEST Program Card (latest version)
- Fender Covers & Floor Mats
- Lexus Diagnostic Tester
- Appropriate Repair Manual
- TIS Machine with printer
- Hand Tools
- Shop Towels

Customized Body Electronic System (C-BEST)

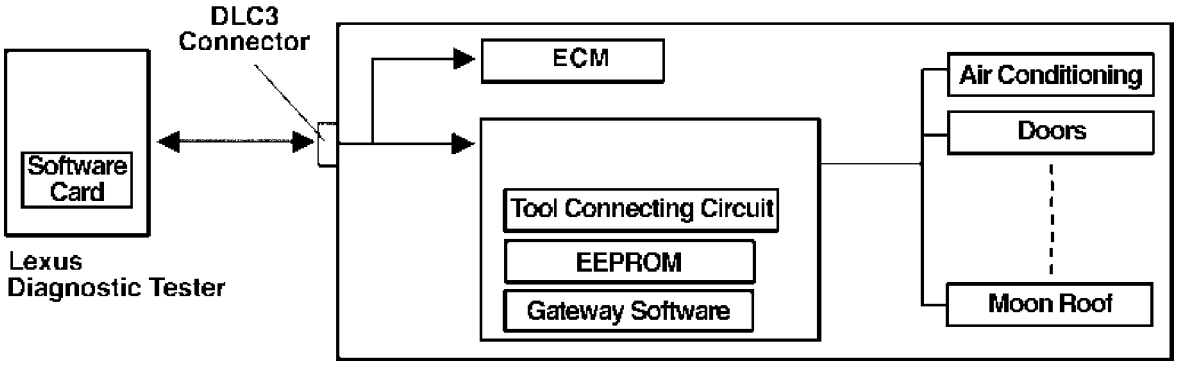

On vehicles equipped with a Customized Body Electronics System, certain body electronic system operations may be changed to accommodate the preference of the Lexus customer.

The Lexus Diagnostic Tester is used to overwrite the Electronic Programmable Chip of the Body ECM (EEPROM) to customize the systems and functions that have been designed to be modified.

It is very important to access the latest information when customizing a Lexus customer's vehicle because:

- Many features that may be customized vary from model to model.
- As new systems are developed and perfected, periodically, new customize features are added.

The Technical Information System (TIS) provides easy on-line access to the most current and accurate information available for the C-BEST System. As a matter of fact, Program Cards may be updated on-line through the Technical Information System (TIS) and add the latest customize features.

1. Access the TIS System.
2. Follow the procedure below to access the most current TSIB relating to the Customized Program Card.
   - Select the **Lexus Icon** on the TIS Terminal screen.
   - Select **Repair Information.**
   - Select **TSIB.**
   - Select the **All Years** and **All Models,** appropriate to the vehicle at your workstation.
   - Select **Search**, Check the **"Advanced Search"** box, and type in the password **"customize"** (this will provide a menu of the contents of this section).
   - Print the TSIB **"Customize Program Card"** and retain it with this worksheet.

Hint: To print, select the printer icon at the top of the screen, then select "ALL" to print all pages of the document.

3. Read the TSIB "Customize Program Card" and answer the questions that follow.
4. Which Lexus vehicles can currently be customized?

   _____

5. Where can you find the service procedure for customizing?

   _____

   _____

6. When customizing a Lexus customer's vehicle, a detailed description including the "item selected," the current setting, and the new setting must be entered as a vehicle note. Where is this information entered?

   _____

   _____

7. Why is it important to record the aforementioned information?

   _____

   _____

8. With the vehicle's ignition switch in the OFF position, install the correct program card into the Tester.

Note: When removing program cards, be sure the Tester is in the OFF position.

9. Which program card are you using to customize this vehicle's system?

   _____

10. Connect the Data Link Connector Cable to the appropriate Data Link Connector in the vehicle.
11. Which Data Link Connector are you accessing?

   _____

12. Turn the ignition switch to the ON position.

13. Depress the ON key of the Diagnostic Tester keyboard.

14. Follow the procedures outlined in the TSIB “Customize Program Card” to customize the features indicated in the table below. Record the items that should be entered into the “National Service History Vehicle Notes” in the appropriate column of the table.

Function Select	Item Select	Initial Setting	Change Setting	Default	Confirm Change
Wireless Door Lock	Open Door Warning		OFF		
	Wireless Operation		OFF		
	Trunk Lid Open		OFF		
Door Lock	Unlock/Key Twice		OFF		
Power Window	Down/Door Key		OFF		
Illuminated Entry	Lighting Time		30S		
Warning	Key Remind Sound		Fast		
Light Control	Light Off Delay		90S		
Tilt & Telescope	Auto Tilt Away		OFF		
Slide Roof	Close with Wireless		ON		

15. Have your colleague and teammate, record the default setting for each of the features that you have just customized (those listed in the table) and then reset each item to the proper default setting.

You have now completed this portion of the worksheet. You should have acquired the skills to use the Lexus Diagnostic Hand-Held Tester to overwrite the Electronic Programmable Chip of the Body ECM (EEPROM) and customize the systems and functions that have been designed to be modified.

If you have any doubts about your understanding of the material or your skills, please review your work. Once you are confident of your skills, have your instructor verify your work.

Notes

Lexus Diagnostic Tester (Scan Tool) Part 4 Customized Body Electronic System (C-Best)

Name: _____ Date: _____

Review this sheet as you are doing the Lexus Diagnostic Tester (Scan Tool) Part 4 Customized Body Electronic System (C-Best) worksheet. Check either category after completing the worksheet and instructor presentation. Ask the instructor if you have questions. The comment section is for you to write notes on where to find the information, questions, etc.

I have questions

I know I can

Objectives/Tasks			Comment
Describe how C-Best can overwrite certain functions.			
Turn Wireless Door Lock - *Open Door Warning* OFF.			
Turn Door Lock - *Unlock/Key Twice* Function OFF.			
Turn Power Window - *Down/Door Key* OFF.			
Adjust Illuminated Entry - *Lighting Time* to 30 seconds.			
Turn Warning - *Key Remind Sound* to Fast.			
Adjust Light Control - *Light Off Delay* to 90 seconds.			
Turn Tilt & Telescope - *Auto Tilt Away* Off.			
Modify Body Electronic system operations using C-Best			

Instructor's Concurrence: _____

Notes

WORKSHEET 4-8
Electronic Throttle Control System-intelligence (ETCS-i)

Vehicle	Year/Prod. Date	Engine	Transmission

Required Tools:

- Vehicle Equipped with ETCS-i
- Lexus Diagnostic Tester
- Serial Printer
- Appropriate R/M
- Hand tool set
- Diagnostic Toolset Manual
- Fender covers & seat covers
- Floor mats & shop towels

On vehicles equipped with an Electronic Throttle Control System (ETCS-i), the ECM drives a throttle control motor to a target throttle angle based upon operating conditions and such factors as accelerator pedal effort and engine rpm to achieve better performance and comfort.

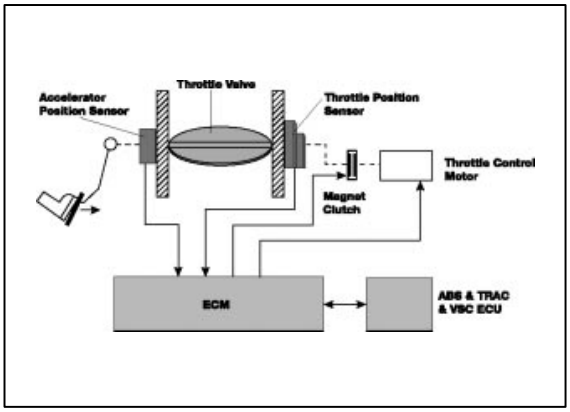

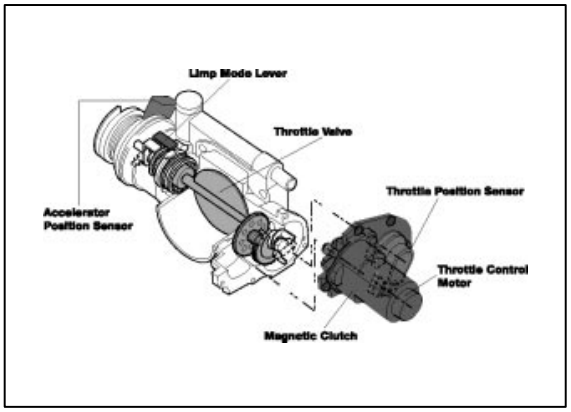

Training Objectives: To provide a hands-on introduction to the ETCS-i System and relevant practice using the Diagnostic Tester.

Technician Objective: At the conclusion of this worksheet you will be able to:

- Identify the components of ETCS-i System.
- Perform an Accelerator Sensor Test on the ETCS-i System.
- Display, graph and print ETCS-i System information using the Diagnostic Tester.
- Perform a Limp Mode Test on the ETCS-i System.

Accelerator Position vs. Throttle Position Test

1. Connect the Diagnostic Tester to the vehicle at your workstation.

2. Which DLC connector did you access?

_____

3. Is this vehicle equipped with a Multiplex System?

_____

_____

4. Key on, follow the Data Stream appropriate to the vehicle at your workstation.

Hint: Select CURRENT DATA; DATA LIST; ETCS-i. Use the Yes key to scroll through the various selections. Reference the Diagnostic Toolset Manual if necessary.

5. Select Line Graph Mode (reference the Diagnostic Toolset Manual if necessary).

6. Scroll down using the Arrow Keys on the Tester Keyboard and select Data items:

Accelerator Position 1 (V.), and Throttle Position (%)

Hint: (*) plus the Down Arrow Key on the Tester Keyboard, pages down one full screen.

7. Graph the relation of Accelerator input to actual Throttle Position.

8. Attach your graph in the space provided. Do not exit line Graph Mode.

Hint: Press help key if unable to find Graph Mode

Attach your print out in the box below

9. Raise vehicle on lift, Start Engine, shift to “D”, fully depress the throttle and quickly release.

10. Graph the relation of Accelerator input to actual Throttle Position, and attach your graph in the space provided.

Caution: Do not hold throttle open more than 3 seconds
Be sure all people and equipment are clear of the wheels.

Note: TRAC will activate in response to this test.

Attach your print out in the box below

11. What does this tell you about the ECM’s response to demand as it relates to throttle opening?

_____

_____

_____

12. Stop Engine.

Accelerator Sensor Test (Key On Test)

ETCS-i has 2 sensor circuits for both accelerator position and throttle position. This test involves Accelerator Position (VPA) and Accelerator Position 2 (VPA2), the 2 signals from the accelerator sensor.

13. Using the Diagnostic Tester, record Accelerator Position and Accelerator Position 2 voltage with throttle fully closed, throttle half open, and throttle wide open.

14. Record the results of your investigation in the chart below.

Accelerator Position	Voltage Pedal Angle (VPA)	Voltage Pedal Angle 2 (VPA2)
Closed		
50%		
Full Open		

15. Were the two signals the same? Yes _____ No _____

16. How does the ECM use 2 signals from each sensor to determine a malfunction?

_____

17. What would result if a malfunction were detected?

_____

Limp Mode Test

18. Start the engine.

19. Using the Diagnostic Tester, select and record idle speed (engine rpm) and Throttle Position in the chart below.

SELECTION	AT IDLE	DISCONNECTED ETCS-i THROTTLE MOTOR
Idle Speed (rpm)		
Throttle Position (%)		

20. Stop the engine.

21. Disconnect wire harness connector for ETCS-i throttle motor.

22. Start Engine.

23. Record the results of your investigation in the chart on the previous page.

24. What happened to the idle speed?

_____

25. What are the characteristics of the throttle response?

26. What might be the customer complaint if the ETCS-i Throttle Control Motor were to become inoperative?

_____

Stop Engine Attach your printout in the box

Attach your print out in the box below

27. Reconnect the ETCS-i motor.

28. Using the Diagnostic Tester, check for trouble codes.

29. If a DTC is present, print the screen and attach the print-out in the space provided.

30. Reference the DTC Trouble Code Chart in the Repair Manual for the vehicle at your workstation.

31. List the “Trouble Areas” from the Repair Manual for this DTC.

_____

_____

_____

_____

32. Clear all Codes.

33. Reassemble vehicle and return the workstation to its original condition.

You have now completed this worksheet, you should have acquired the skills to:

- Perform an Accelerator Sensor Test on the ETCS-i System.
- Display, graph and print ETCS-i System information using the Diagnostic Tester.
- Perform a Limp Mode Test on the ETCS-i System.

If you have any doubts about your understanding of the material or your skills, please review your work. Once you are confident of your skills, have your instructor verify your work.

Electronic Throttle Control System-intelligence (ETCS-i)

Name: _____ Date: _____

Review this sheet as you are doing the Electronic Throttle Control System-intelligence (ETCS-i) worksheet. Check either category after completing the worksheet and instructor presentation. Ask the instructor if you have questions. The comment section is for you to write notes on where to find

I have questions

I know I can

Objectives/Tasks			Comment
Identify the components of ETCS-i System.			
Perform an Accelerator Sensor Test on the ETCS-i System.			
Display, graph and print ETCS-i System information using the Diagnostic Tester.			
Perform a Limp Mode Test on the ETCS-i System.			

Instructor's Concurrence: _____

Notes

WORKSHEET 4-9
Engine Immobilizer System

Vehicle	Year/Prod. Date	Engine	Transmission

Required Tools:

- Vehicle equipped with Engine Immobilizer System
- Lexus Diagnostic Toolset Operator's Manual
- Appropriate Repair Manual
- Lexus Diagnostic Tester
- Master and Sub-keys

The Engine Immobilizer System is a theft-deterrent system that prohibits fuel delivery and ignition if an attempt is made to start the vehicle using an invalid ignition key.
The system consists of:

- A transponder (ignition) key.
- A transponder key coil.
- Transponder key amplifier.
- An ECM.

Training Objective: To provide relevant practice and skill verification performing key code registration using:

- The manual method
- The Lexus Diagnostic Tester

Technician Objective: At the conclusion of the worksheet, you will be able to:

- Perform a key code erasure.
- Perform a key code addition.

Engine Immobilizer System

1. Reference the Repair Manual for the vehicle in your workstation and find the key code erasure procedure for the Immobilizer System.

2. In what section of the Repair Manual did you find this information?

Note: Be sure to maintain the master Key during this operation.

3. Follow the procedure to manually (depressing the brake and acceleration pedal) erase the key codes from the sub-key and the additional master key.

4. How do you know the key code erasure procedure has been successful?

_____

_____

5. Try to start the engine using the erased keys in the ignition.

6. What happened?

_____

_____

7. Re-register one of the erased keys as a master key by following the procedure indicated in the Repair Manual for manual registration (depressing the brake and acceleration pedal) of an additional master key.

8. Try to start the vehicle with the new master key.

9. Did the vehicle start?
   YES _____ NO _____

Note: If the vehicle did not start, approach your instructor for direction. If the vehicle did start, proceed with this worksheet.

10. How many master key codes, including the already registered key is it possible to register?

_____

11. Secure a Lexus Diagnostic Tester and follow the instructions outlined below.

12. Reference the Diagnostic Toolset Operator's Manual.

13. What version program card are you using in the Diagnostic Tester?

_____

14. Using the Diagnostic Tester, follow the procedures in the Repair Manual for Key Code Registration.

    Hint: This procedure can also be found in the Diagnostic Toolset manual. The new features section is always a good choice because software is updated periodically and you will want to use the most current software and software procedure to perform these tasks.

15. Follow the procedures listed to register the other key that you erased previously, as a sub key.

16. How do you know the key registration was successful?

_____

17. Try the new sub key in the ignition.

18. What happened?

_____

_____

Engine Immobilizer System

19. How many sub key codes, including the already registered key is it possible to register?

_____

The Lexus Immobilizer System can be a customer sensitive issue. If all the Master Keys are lost, the only alternative is to replace the ECM and all of the keys.

When you have completed this worksheet, you should have acquired the skills to erase key codes and register additional master and sub keys to the Immobilizer System.

If you have any doubts about your understanding of the material or your skills, please review your work. Once you are confident of your skills, have your instructor verify your work.

Notes

Engine Immobilizer System

Name: _____ Date: _____

Review this sheet as you are doing the worksheet. Check either category after completing the worksheet and instructor presentation. Ask the instructor if you have questions. The comment section is for you to write notes on where to find the information, questions, etc.

I have questions

I know I can

Objectives/Tasks			Comment
Identify components of the Engine Immobilizer System.			
Perform a key code erasure using the manual method.			
Perform a key code addition using the manual method.			
Perform a key code registration using the Diagnostic Tester Method.			
Perform a key code addition.			

Instructor's Concurrence: _____

Notes

WORKSHEET 4-10
Adaptive Variable Suspension & Active Height Control (AVS & AHC)

Vehicle	Year/Prod. Date	Engine	Transmission

Required Tools:

- LX 470 Vehicle
- Lexus Diagnostic Tester
- LX 470 Repair Manual
- Diagnostic Toolset Manual
- Serial Printer
- SST 09843-18020
- Hand tool set
- Shop Towels
- Tape Measure (Yrd Stk.)
- Fender covers, seats covers & floor mats

Adaptive Variable Suspension (AVS) is a semi-active shock absorber system that continuously changes shock valving individually at each wheel. The computer system selects from a range of 64 different settings-from softest to most firm- depending on feedback from various road sensors. The AVS system senses road bumps, steering wheel activity, braking and acceleration and can momentarily adjust shocks to a stiffer value to produce a more stable ride or adjust them to a softer value to absorb a bump.

Active Height Control (AHC) allows the driver to adjust the vehicle ride height to three levels - high, normal and low. The high mode provides improved driveability over rough terrain, while the low mode affords improved ease of in and out access. The height control switch and indicator light work to help the driver know at what height the vehicle is as well as to indicate the optimal height control depending on driving conditions.

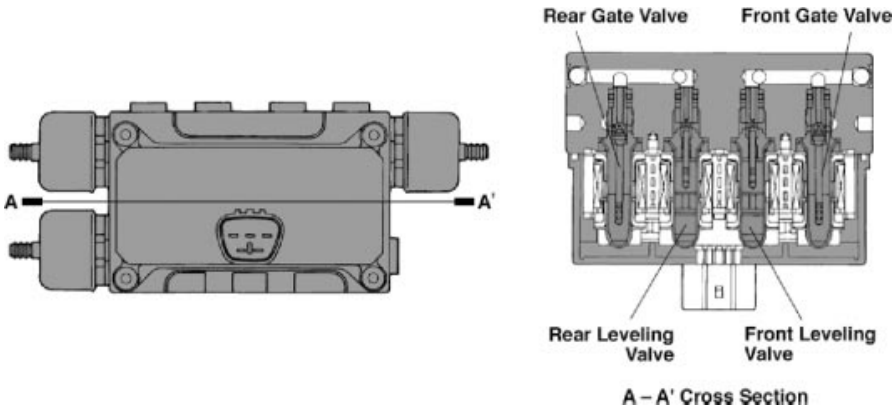

Training Objectives: To provide a hands-on introduction to the AVS & AHC System and relevant practice using the Diagnostic Tester and Diagnostic Check Wire to inspect the system.

Technician Objective: At the conclusion of this worksheet you will be able to:

- Identify the components of the AVS & AHC System.
- Check for stored DTCs using the Diagnostic Check Wire and the Diagnostic Tester.
- Perform a Damping Force Condition Check.
- Display and print AVS & AHC data using the Diagnostic Tester.

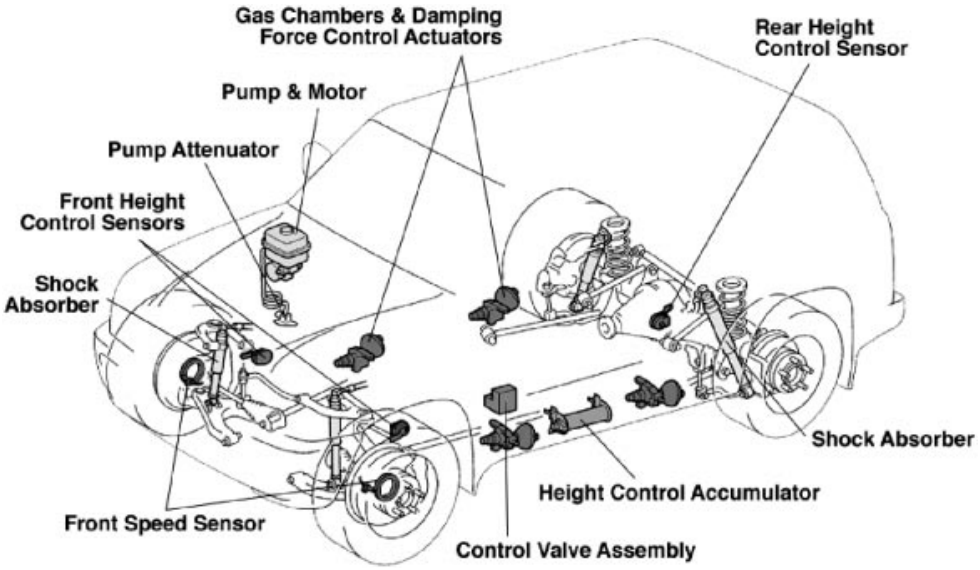

1. Component Location

Use the illustration above as a guide to locate the various components of the AVS and AHC systems. This will aid in performing the tasks in this worksheet.

Locate the following components on the vehicle:

Engine Compartment

1. Hydraulic Pump
2. Motor assembly
3. Fluid levels

Interior

1. Height Control Indicator Light
2. Steering Angle Sensor
3. Suspension Control ECU
4. Height Select Switch
5. Damping Mode Switch
6. DLC 3

Undercarriage

1. Front and rear Height Sensors
2. Speed Sensors
3. Shock Absorbers
4. Damping Force Control Actuators
5. Control Valve Assembly

2. Vehicle Height Measurement

- Use the Height Control Switch on the center console to raise and lower the vehicle.
- Measure the height at highest point of wheel well opening.
- Record your measurements on the following chart: (Note the fluid level characteristics as the vehicle is raised and lowered):

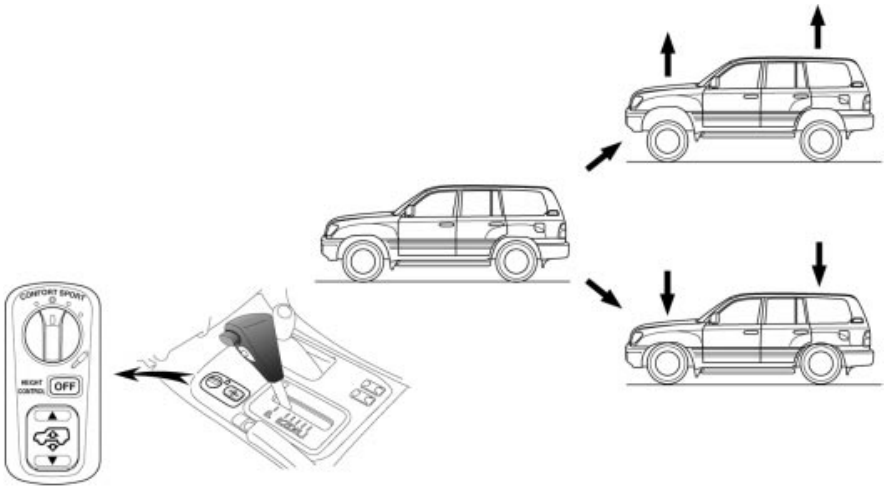

High
Front _____
Rear _____

High
Front _____
Rear _____

High
Front _____
Rear _____

3. Check for Stored DTCs with Diagnostic Test Lead SST

- Connect DLC 1 terminals TC and E1 as indicated.
- Observe Height Control Indicator Light blinking pattern for DTCs.

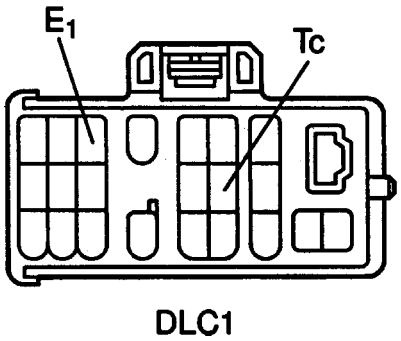

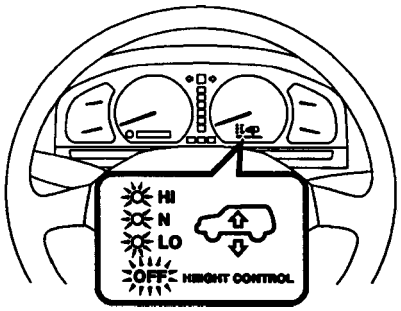

4. Input Signal Check with Diagnostic Test Lead SST

This exercise allows the inputs to the ECU to be verified by observing the AHC Off Indicator Light.

- Refer to INPUT SIGNAL CHECK section of the Repair Manual.
- Connect terminals TS and E1 of DLC 1 with SST.
- Follow the steps in the Repair Manual, using the INPUT SIGNAL Chart to verify the operation of each input signal.

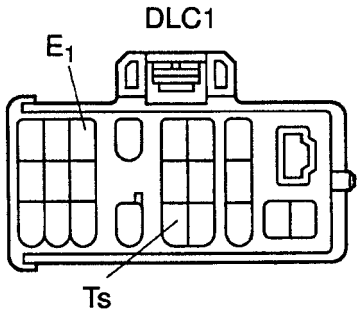

5. Damping Force Condition Check

The Damping Force Control Actuator operation can also be verified.

- With terminals TS and E1 still connected at DLC1 and the engine running perform the steps outlined in the DAMPING FORCE CONTROLLING CONDITION CHECK section of the Repair Manual.
- Depress brake pedal in one step increments to change damping force. Note change by bouncing vehicle at the beginning of the exercise, after depressing the brake 8 times, and after depressing the brake 16 times.

  How much change occurred? Was it noticeable?

  _____

6. Displaying Data, DTCs, and Performing Active Tests with Diagnostic Tester

The Lexus Diagnostic Tester makes it possible to view data, check and clear DTCs, and perform Active Tests.

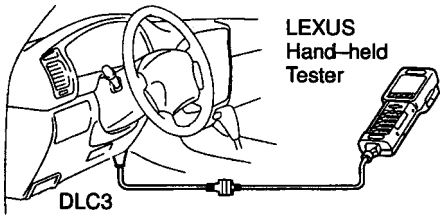

- Connect Diagnostic Tester to DLC 3 then connect the printer to the tester and a power source.

- Follow the steps outlined below.
- Select OBD/MOBD from the FUNCTION SELECT menu.
- Select AHC from the OBD/MOBD menu.
- Select CURRENT DATA from the DIAGNOSTIC menu.
- Select DATA LIST from the CURRENT DATA menu.
- Select ALL DATA from the SELECT DATA menu.

- Note available data.

7. Print Data List for Low, Normal, and High Positions

- Using the Height Control Switch, lower and raise the vehicle while observing pressure sensor, height sensors, and switch inputs.
- Print and retain with this worksheet Data Lists for the vehicle in Low, Normal, and High position.

8. Height Control Active Test

With engine running:

- Select OBD/MOBD from the FUNCTION SELECT menu.
- Select AHC from the OBD/MOBD menu.
- Select TEST DATA from the DIAGNOSTIC menu.
- Select HEIGHT CONTROL from the TEST DATA menu.
- Select FRONT HEIGHT or REAR HEIGHT.
- Touch ENTER to access the SELECT DATA menu.
- Select ALL to proceed directly to the ACTIVE TEST MODE.

The parameters associated with the active test are displayed in the Data list format. You will use the “arrow keys” to change the active parameter displayed on the bottom line.

Raise and lower front and rear of vehicle using the Diagnostic Tester “arrow keys,” while observing pressure, and height sensors.

CAUTION: DO NOT raise vehicle height more than the measurement taken in the High position is Step 2 of this worksheet.

9. Relay and Solenoid Active Tests

- Assure vehicle is at normal height.
- Select TEST DATA, ACTIVE TEST.
- Activate relays and solenoids.
- Listen for clicks which indicate relay and solenoid operation.

10. Bleeding Procedure

Use Repair Manual and familiarize yourself with the bleeding procedure for Adjustable Height Control. List the steps involved below.

_____

_____

_____

_____

_____

_____

After all tests have been completed, clear any stored DTCs and return vehicle to normal height.

When you have completed this worksheet, you should have acquired the skills to:

- Identify the components of the AVS & AHC System.
- Check for stored DTCs using the Diagnostic Check Wire and the Diagnostic Tester.
- Perform a Damping Force Condition Check.
- Display and print AVS & AHC data using the Diagnostic Tester.

If you have any doubts about your understanding of the material or your skills, please review your work. Once you are confident of your skills, have your instructor verify your work.

Adaptive Variable Suspension & Active Height Control (AVS & AHC)

Name: _____ Date: _____

Review this sheet as you are doing the Adaptive Variable Suspension & Active Height Control (AVS & AHC) worksheet. Check either category after completing the worksheet and instructor presentation. Ask the instructor if you have questions. The comment section is for you to write notes on

I have questions

I know I can

Objectives/Tasks			Comment
Identify the components of the AVS & AHC System.			
Check for stored DTCs using the Diagnostic Check Wire and the Diagnostic Tester.			
Perform a Damping Force Condition Check.			
Display and Print AVS & AHC data using the Diagnostic Tester's serial printer.			
Perform a vehicles height measurement using the Height Control Switch located inside the vehicle.			
List the "Bleeding" procedure.			

Instructor's Concurrence: _____

Notes

WORKSHEET 4-11
Navigation System

Vehicle	Year/Prod. Date	Engine	Transmission

Required Tools:

- Vehicle equipped with Navigation System
- Appropriate Navigation System Owner's Manual
- Navigation System Quick Reference Guide

The Lexus Navigational System calculates the current vehicle position using Global Positioning System (GPS) satellite signals.

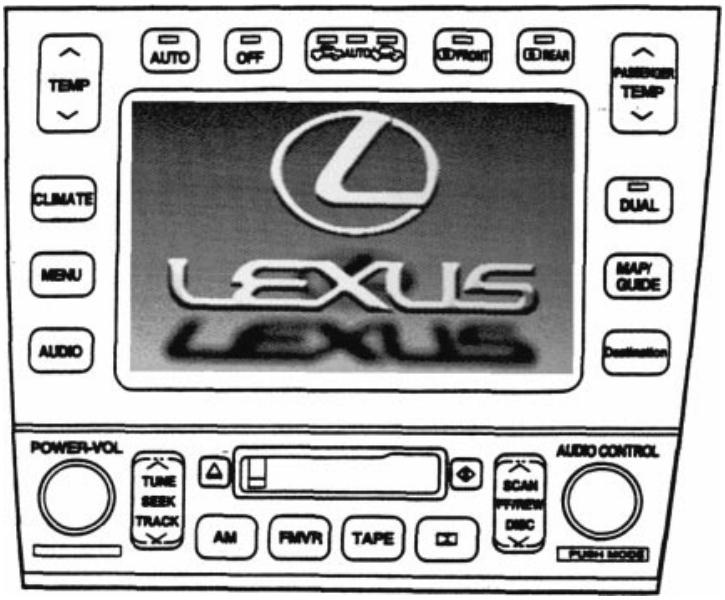

Training Objective: To introduce the Navigational System.

Technician Objective: At the conclusion of this worksheet you will be able to use the Lexus Navigational System to select a predetermined point of interest, set a way point along the route, and find the destination.

Suggested Route:

Destination - address _____

Way point (on the way) (point of interest) _____

Return - marked point _____

Carefully observe the guidance provided by the navigation system as the vehicle is driven on the suggested route. Your observations will be discussed at the end of this exercise.

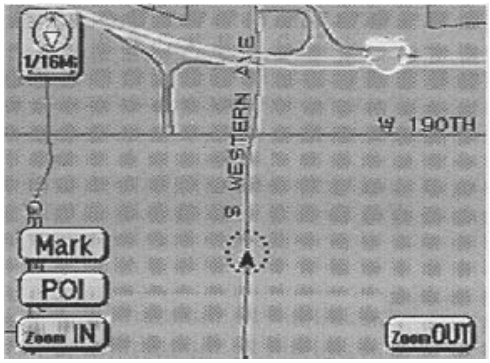

1. Display map
2. Mark point (present location)

2. Press destination on outer panel

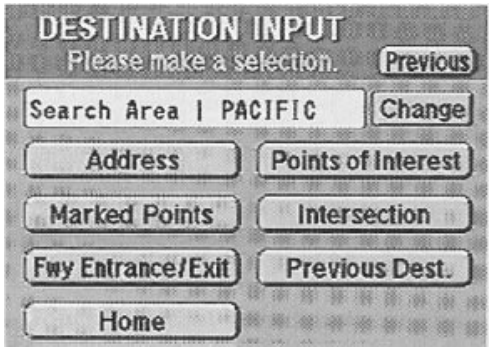

1. Select address

3. Enter destination address

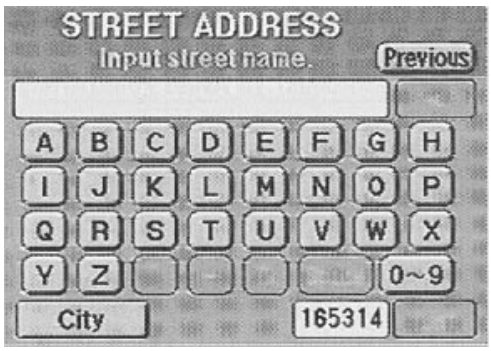

1. Enter city
2. Enter street
3. Enter number

4. Set way point

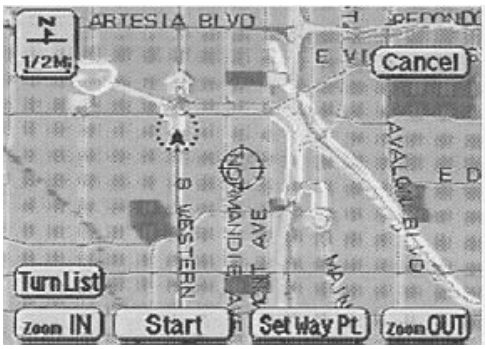

1. Select set way point
2. Select point of interest

5. Select point of interest

1. Select the predetermined point of interest

6. Drive to destination with a stop at the way point

At destination, set return route by selecting previously marked point.

7. Select marked points

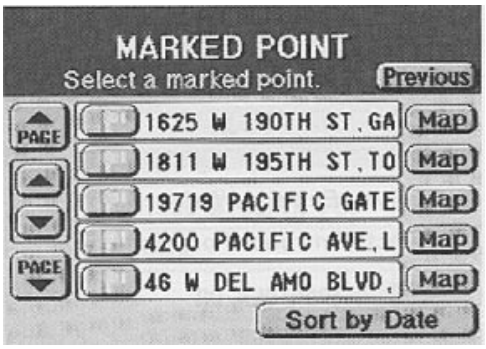

1. Select the point you previously marked (Should be training center)

8. Proceed to marked point

1. Did the navigation system provide guidance to all routes selected?

   _____

2. Why do some of the keys on the input keyboard disappear when entering a name or location?

   _____

   _____

3. Why are some functions not available while driving?

   _____

   _____

4. Based on your driving experience what questions might a customer ask about the operation of their navigation system?

   _____

   _____

   _____

   _____

   _____

   _____

You have now completed this worksheet. You should have acquired the skills to use the Lexus Navigational System to select a predetermined point of interest, set a way point along the route, and find the destination.

If you have any doubts about your understanding of the material or your skills, please review your work. Once you are confident of your skills, have your instructor verify your work.

Navigation System

Name: _____ Date: _____

Review this sheet as you are doing the worksheet. Check either category after completing the worksheet and instructor presentation. Ask the instructor if you have questions. The comment section is for you to write notes on where to find the information, questions, etc.

I have questions

I know I can

Objectives/Tasks			Comment
Identify the components of the Navigation System.			
Select and plot a destination using the Navigation System.			
Select and set a waypoint in a plotted destination using the Navigation System.			

Instructor's Concurrence: _____

Notes

WORKSHEET 4-12
Vehicle Skid Control (VSC)

Vehicle	Year/Prod. Date	Engine	Transmission

Required Tools:

- Vehicle equipped with VSC
- Lexus Diagnostic Tester
- Serial Printer
- Diagnostic Toolset Manual
- Diagnostic Check Wire SST09843-18020
- Appropriate Repair Manual
- Fender covers, seat covers, and floor mats
- Shop Towels

Vehicle Skid Control (VSC) is an advanced system that works with the anti-lock brakes (ABS) and traction control (TRAC) to help stabilize the vehicle when the driver must make evasive maneuvers or when the vehicle is on a slippery surface.

Training Objectives: To provide a hands-on introduction to the VSC System and relevant practice using the Diagnostic Tester and Diagnostic Check Wire to inspect the system.

Technician Objective: At the conclusion of this worksheet you will be able to:

- Identify the components of the VSC System.
- Check for stored DTCs using the Diagnostic Check Wire and the Diagnostic Tester.
- Perform a VSC Sensor Check.
- Display and print VSC data using the Diagnostic Tester.
- Perform Active Test on VSC System.
- Check the output value of the Steering Angle Sensor.

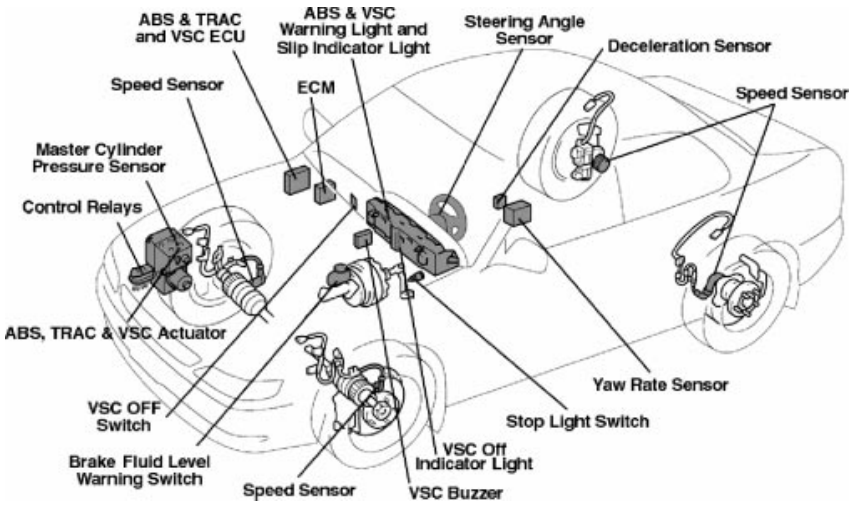

1. Component Location

Use the preceding illustration as a guide to locate the various components of the VSC system. This will aid in performing the tasks in this worksheet.

Locate the following components on the vehicle:

Engine Compartment

1. ABS,TRAC, & VSC Actuator
2. Pump Motor & Solenoid Relays
3. DLC1 Connector

Undercarriage

1. Front Speed Sensors
2. Rear Speed Sensors

Interior

1. ABS, TRAC, & VSC ECU
2. YAW Rate Sensor
3. Deceleration Sensor
4. VSC Off Switch
5. VSC Off indicator light
6. VSC Malfunction light
7. DLC2
8. DLC3

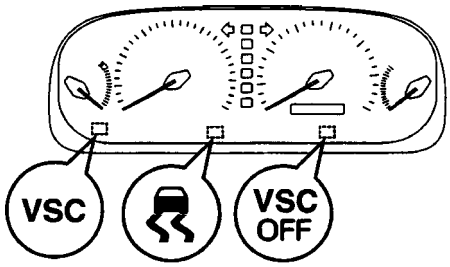

VSC Diagnostics

- Turn ignition switch ON.
- Check to see if the VSC Warning Light, VSC Off Light and Slip Indicator Light turn on for 3 seconds.

2. Checking for Stored DTCs with Diagnostic Test Lead SST

- Disconnect Master Cylinder Pressure Switch
- Connect DLC1 terminals TC and E1 as indicated using the Diagnostic Check Wire.
- Observe DTCs from VSC blinking warning light.
  1. Record DTCs if present.

     _____

  2. If a DTC was present, what component or system does the code indicate?

     _____

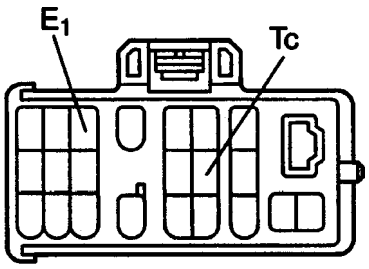

DLC1

Hint: Reference the trouble code chart for VSC system in the DI section of your manual.

* Refer to Repair Manual for DTC descriptions.

3. Checking for Stored DTCs with the Lexus Diagnostic Tester

- Connect tester to DLC3.
- Make sure ignition is in the ON position
- Follow the steps outlined below.

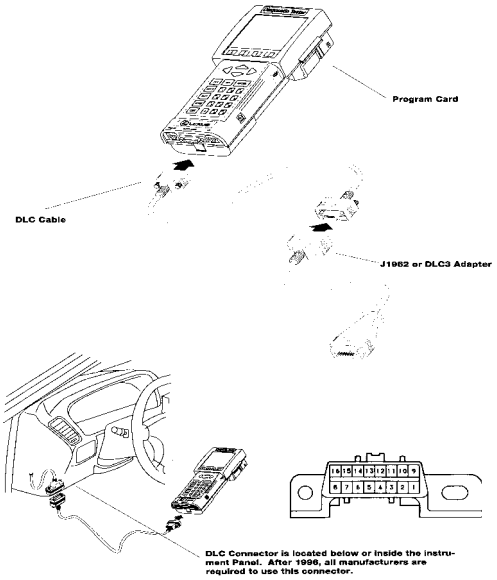

Select **OBD/MOBD** from the **FUNCTION** SELECT menu.
Select **ABS/VSC** from the **OBD/MOBD** menu.
Select **TROUBLE DATA** from the **DIAGNOSTIC** menu.

1. Record DTCs if present _____

Hint: See ABS Codes

2. How many codes are detected? _____
3. Why? _____

_____

_____

_____

_____

4. Plug sensor back in and clear any codes present using the Diagnostic Tester.

* Refer to Lexus Diagnostic Tester Operations Manual for tester operating instructions.

4. VSC Sensor Check

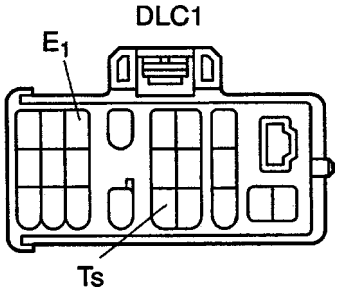

- With terminals TS and E1 connected at DLC1 and the engine running

1. Does the VSC warning light blink?

_____

- Perform the steps outlined in the VSC Sensor Check (Test Mode) section of the Repair Manual.

5. Displaying VSC Data using the Diagnostic Tester

The Lexus Diagnostic Tester provides you with the ability to view data and verify inputs from sensors and switches.

- Connect Diagnostic Tester to DLC3 and connect the printer to the tester and a power source.
- Follow the steps outlined below.

Select **OBD/MOBD** from the **FUNCTION SELECT** menu.
Select **ABS/VSC** from the **OBD/MOBD** menu.
Select **CURRENT DATA** from the **DIAGNOSTIC** menu.
Select **DATA LIST** from the **CURRENT DATA** menu.
Select **ALL** from the **SELECT DATA** menu.

- Note available data.
- Step on brake pedal to check the Brake Switch (the data list should indicate ON).
- Press VSC OFF Switch to the OFF position to check input from this switch on the Tester.
- Print available data for your own future reference.

6. Performing Active Tests with Diagnostic Tester

The Lexus Diagnostic Tester makes it possible to perform active tests verifying solenoid and indicator light operation.

- Follow the steps outlined below.

Select **OBD/MOBD** from the **FUNCTION SELECT** menu.
Select **ABS/VSC** from the **OBD/MOBD** menu.
Select **TEST DATA** from the **DIAGNOSTIC** menu.
Select **ACTIVE TEST** from the **TEST DATA** menu.

- Note available Active Tests.
- Print available tests for future reference.
- Activate Slip Indicator Light.
- Activate VSC Buzzer.
- Activate SFLH Solenoid.

1. Did the solenoid stay activated?

_____

2. Why did the solenoid Active Test respond as it did?

_____

3. How would the VSC Data List and Active Tests help you diagnose a problem?

_____

_____

_____

7. Yaw Rate Sensor Zero Point Calibration (optional)

When replacing the Yaw Rate Sensor assembly, ECU, or if the battery has been disconnected, a Yaw Rate Sensor Zero Point Calibration must be performed.

- The shift lever must be in P position.
- Turn ignition ON and do not move vehicle for 15 seconds.
- Connect Tc to E1 (this remains connected for the duration of the test).
- Repeat connecting and releasing Ts and E1 terminals of DLC1 four times or more in 8 seconds.
- Remove SST.
- The VSC Warning Light and the VSC Off Light will blink.
- Turn ignition OFF and wait 5 seconds before turning ignition ON.
- The VSC Warning Light and the VSC Off Light stay on for 15 seconds then go off.
- Do not move vehicle until light goes off.

The Yaw Rate Zero Point Calibration is now complete.

8. Reassemble vehicle and return workstation to its original condition.

When you have completed this worksheet, you should have acquired the skills to:

- Identify the components of the VSC System.
- Check for stored DTCs using the Diagnostic Check Wire and the Diagnostic Tester.
- Perform a VSC Sensor Check.
- Display and print VSC data using the Diagnostic Tester.
- Perform Active Test on VSC System.
- Check the output value of the Steering Angle Sensor.

If you have any doubts about your understanding of the material or your skills, please review your work. Once you are confident of your skills, have your instructor verify your work.

Notes

Vehicle Skid Control (VSC)

Name: _____ Date: _____

Review this sheet as you are doing the Vehicle Skid Control (VSC) worksheet. Check either category after completing the worksheet and instructor presentation. Ask the instructor if you have questions. The comment section is for you to write notes on where to find the information, questions, etc.

I have questions

I know I can

Objectives/Tasks			Comment
Identify the components of the VSC System.			
Perform a VSC sensor check.			
Display and print VSC data using the Diagnostic Tester.			
Perform an Active Test on the VSC system.			
Check the output value of the Steering Angle Sensor.			
Perform a Yaw Rate Sensor Zero Point Calibration			

Instructor's Concurrence: _____

Notes

Section 5

NOISE, VIBRATION, & HARSHNESS

General Description

Noise and vibration are inherent occurrences in the operation of a motor vehicle. A vehicle, which does not make noise or vibration, simply does not exist. NVH, an acronym for *noise,vibration*, and *harshness*, is used here to collectively represent these phenomena that are regarded as unpleasant to the senses.

Vehicles are comprised of numerous components and the way they resonate among themselves are diverse. If these vibrations and sounds are acceptable to the customer, all is well. However, with the advent of smoother roads, better insulation, and technologically advanced vehicles, customers are demanding a more comfortable ride, and even a slight vibration or noise is often a source of concern to them.

It is important to be sure that the symptom in question is truly an abnormal condition. A noise or vibration level which is acceptable in one type of vehicle might not be acceptable in another.

Noise

A running engine or moving vehicle produces a variety of sounds. Whether these sounds are a “noise” or not depends more on how the listener perceives them than how loud they actually are. Generally, however, we can say that a noise is an inappropriate, unpleasant, or excessively loud sound.

Vibration

Here are some of the typical ways in which you feel vibration:

- The steering wheel shakes up and down, causing your hands to tremble
- The seat shakes, vibrating the person in it
- The shift lever or the accelerator pedal chatters annoyingly

A running engine or a moving vehicle generates various vibrations, just as with noise. The driver or the passenger may consider these vibrations unpleasant, depending on where and how they occur.

Harshness

Harshness is a single and momentary sound created by a strong impact to the tire. It feels like someone has hit the tire with a sledgehammer, and its impact is transmitted to the steering wheel and the floor.

Prevention of Vibration and Noise

The three methods for preventing vibration or noise are:

- preventing the vibrating force from occurring
- isolating the vibration
- soundproofing

Although preventing vibration from occurring in the first place is the most effective method, vibration or noise can also be prevented by removing any of the transmitting media. Soundproofing is also a method to prevent the vibration of possible vibratory elements and/or the transmission of the vibrations through the air.

Preventing Vibrating Force from Occurring

If we could simply reduce the strength of a vibration to zero, we would have neither vibration nor sound. In reality, however, we must confront the nature of an automobile, which emits vibratory forces generated by such widely variant things as the combustion and torque fluctuation of the engine, bumpy roads, etc. Sometimes with all of these normally generated vibrations, all we can hope to do is strive to minimize the strength of the vibration rather than to eliminate it at the source.

Isolating Vibrations

Suppose that a vibratory element vibrating at its natural frequency bothers you; there are two ways in which you can reduce its frequency to an acceptable level. One is to change the existing frequency to a different one. Another method is to disperse that frequency. In other words, an annoying vibration or sound in a vehicle will not bother the driver or the passengers if that source is taken out of the normal usage range of the vehicle, or out of the range that humans can feel or hear.

Tires

Tires are also a significant contributor to NVH. Besides the ordinary problems arising from tire wear and imbalance, there are also problems that arise from the use of incorrect after-market tires. It sometimes even happens that merely remounting a tire onto its wheel increases the run-out and unbalance.

Here is how tires affect NVH:

1. No tire is perfectly balanced or perfectly round, and all tires flex to some extent as they rotate over the surface of the road. All of these factors cause the tires themselves to act as vibrating elements.
2. Irregular road surface causes tire deformation and subsequent vibration.

Uniformity

Tire uniformity refers to uniformity of weight, dimensions and rigidity. However, since uniformity of weight is ordinarily called “wheel balance” and uniformity of dimensions (or rather, the lack there of) is called “runout,” uniformity alone usually refers to “uniformity of rigidity.”

Wheel Balance

Due to improvements in engine performance, handling, and braking performance, as well as in body aerodynamics, it is becoming possible for automobiles to operate at higher and higher speeds every year.

At high speeds, an unbalanced wheel assembly (disc wheel plus tire) can create vibrations that are transmitted to the body through suspension components, causing annoyance to the driver and passengers. Therefore, it is necessary to balance the wheel assemblies properly in order to eliminate such vibrations.

Wheel balancing involves balancing the weight of the entire wheel assembly - that is, the disc wheel with the tire attached. Wheel balance can be divided into “static balance” (when the wheel assembly is at “rest”) and “dynamic balance” (when it is rotating).

Run-out

Run-out is defined as the apparent change in a tire’s dimensions during rotation. The circumference of the tire is not a perfect circle. This imperfection is unavoidable because the tire is made by bonding rubber and cord together piece by piece. Furthermore, even a perfectly round tire mounted on an automobile would appear irregular, when viewed along the axle, if the centers of rotation of the tire and axle were not aligned. In other words, the rotational radius of the tire would change with respect to the axle’s center of rotation.

Run-out is measured by holding a dial gauge against the surface of the tire, rotating the tire, and observing the fluctuation of the indicator needle on the gauge. There are two types of run-out:

- in the tire’s radial direction (radial run-out)
- in the axial direction (lateral run-out)

Uniformity

When a tire receives a load, it flexes, acting almost as if it were a spring. The treads, rubber carcass, belt, and other materials that compose the tire are not uniformly distributed around the circumference of the tire, so tire rigidity is not uniform.

As a result, the tire is subject to subtle fluctuations in the way it flexes as it rotates. These fluctuations introduce a periodic variation in the force that it receives from the road surface. This force can be resolved into three components:

1. Radial Force Variation (RFV) - fluctuation in the vertical force acting upward toward the tire’s center (parallel to the tire’s radius).
2. Lateral Force Variation (LFV) - fluctuation in the horizontal force acting parallel to the tire’s axis.
3. Tractive Force Variation (TFV) - fluctuation in the horizontal force acting parallel to the tire’s direction of motion.

Of these, the most important is RFV. On an actual vehicle, a tire with a high RFV imposes a vertical vibration on the axle, which can lead to excessive vibration during high-speed travel.

Two ways to reduce RFV are:

1. To trim minute quantities of rubber from the tire's circumference.
2. To shift the tire so that the point with the maximum RFV lines up with the point on the wheel rim having the minimum radial run-out, called "phase matching."

Spring Constant

The spring characteristics of tires have been a subject of intensive research, since they are decisive factors in determining a comfortable ride. In general, smaller spring constants in tires increase comfort. The following are the factors that affect spring constants:

Characteristics	Effects
Air pressure	This has the largest influence on the spring constant. At 9,806.65 kPa (1 kg/mm^2) air pressure, the longitudinal spring constant is approximately 10 kg. mm. It has minimum effects on the lateral spring constant.
Load	At a constant air pressure, the longitudinal spring constant increases with the load.
Wheel rim width	Both the longitudinal and lateral spring constants increase with the increase in wheel rim width.
Tire shape	Higher-compression tires offer larger longitudinal and lateral spring constants.
Tread shape	The flatter the tread shape, the larger the longitudinal spring constant.
Carcass plies	As the number of carcass plies increases, both the longitudinal and lateral spring constants also increase.

Body Shake

"Shake" is defined as vertical or lateral vibration of the vehicle body and steering wheel, along with vibration of the seats. Shake usually cannot be felt below a speed of about 80km/h (50 mph). Above this speed, shake increases markedly, but then peaks at a certain speed.

NOTE

The frequency of the vibration called “shake” is similar to the frequency of the vibrations made by an impact wrench when it is being used to tighten nuts, etc.

Main Causes

- Unbalanced tires, excessive run-out or unevenness
- Resonance among engine, springs, steering wheel, seats, and body

The Mechanics of Vibration

1. Run-out and imbalance of a tire will cause the tire to generate a vibrating force during vehicle operation.
2. This vibration is amplified and in turn causes the axles to vibrate.
3. The vibration of the axles is transmitted to the vehicle body and the engine through the suspension.
4. When the transmitted vibrations resonate with the vehicle body, the body vibrates strongly. In addition, when the vibrations of the axles resonate with those of the engine, the engine vibrates vigorously, which in turn, causes the body to vibrate even more.
5. These body vibrations are transmitted to the steering wheel and seats, causing the body, seats, and steering wheel to vibrate.

NOTE

Sometimes body shake alternates in longitudinal and lateral directions at approximately 10-second intervals. This is due to slight differences in the turning radii of the tires, which create differences in relative run-out points between the right and left tires, or between the front and rear tires. For this reason, while test driving for body shake, it is important to maintain the same speed for at least 10 seconds at a time, before moving to another speed.

Body shake usually occurs due to defective tires. For this reason, most body shake can be eliminated by correcting tire balance or reducing run-out.

Steering Flutter

Steering flutter is a condition in which the steering wheel oscillates 5 to 15 times per second in the direction of the turn. It occurs at relatively limited but high speeds between 80 and 120 km/h (50 and 75 mph), and the oscillations on the steering wheel are fairly constant.

Main Causes

- Tire run-out, unevenness, or imbalance
- Resonance between the tires and the steering wheel

Mechanics of Noise Development

1. Any run-out or imbalance in a tire will generate a vibrating force while the vehicle is in motion.
2. This vibrating force generates an inertial moment at the kingpin,causing the tires to vibrate laterally. The steering wheel will oscillate laterally as well.
3. At a certain speed, the lateral vibrations of the tires generated by the centrifugal force resonate with the steering system, causing the steering wheel to oscillate clockwise and counterclockwise.

Steering Shimmy

This is a condition in which the steering wheel oscillates clockwise and counterclockwise, just as in steering flutter, but at lower vehicle speeds (e.g., 60 to 80 km/h [38 to 50 mph]). This symptom traces its origin to uneven road surfaces or to braking when tires or brakes are unevenly worn. The oscillation of the steering wheel increases with the vehicle speed.

Main Causes

- Uneven road surface.
- Tire deformation or an abrupt vertical vibration caused by braking when tires or brakes are unevenly worn.
- Resonance among tires, the steering system, and the suspension.
- Play in the steering linkages, a decrease in resistance due to wear,or lack of hardness or rigidity of the steering linkages.

An uneven road surface, and deformations in the tires or vertical oscillations upon braking all can trigger vibrations around the front kingpin, causing the steering wheel to shimmy. The components that transmit these vibrations and their symptoms are identical to those of steering flutter.

NOTE

Although steering flutter and shimmy are identical, they have different origins. Flutter is forced upon the steering wheel by the steering system resonating with tire vibrations, which are caused by imbalance, run-out, or unevenness in the tires. Steering shimmy, on the other hand, is a self-perpetuating oscillation triggered by braking or an uneven road surface.

Accelerator Pedal Vibration

This type of vibration occurs at higher engine speeds, but is unrelated to the vehicle speed. You can feel it with the sole of your foot as it rests on the accelerator pedal, but the pedal does not oscillate greatly in the vertical direction.

Main Causes

- Engine vibration
- Vibration and resonance in the accelerator cable or linkage
- Lack of rigidity in the accelerator cable or linkage

Mechanics of Noise Development

1. Engine vibration causes the accelerator cable or linkage to vibrate.
2. The cable or linkage vibrations are transmitted to the accelerator pedal, causing it to vibrate.

NOTE

In addition to vibration coming directly from the engine, there may also be vibration transmitted from the transmission throttle cable to the accelerator cable or linkage.

Shift Lever Vibration

This type of vibration causes the shift lever to oscillate, usually at relatively low engine rpm. It tends to be more selective about the rpm at which it vibrates.

Main Causes

- Out-of-tune engine
- Imbalance in engine rotating or reciprocating components
- Resonance in the shift lever, or lack or rigidity of the shift lever
- Play between the shift lever and linkage, or worn bushings

Mechanics of Noise Development

1. Engine torque fluctuations or imbalances in rotating or reciprocating components generate torsional vibrations in the drive train. Moreover, an unbalanced propeller shaft or a joint angle may further amplify the vibrations.
2. The transmission extension housing is thus vibrated vigorously,generating a vibratory force, which is transmitted to the shift lever.
3. The shift lever oscillates, since it is mounted on the transmission extension housing. Any play in the shift lever further amplifies the vibration.

Front-Engine, Front-Drive Vehicles

An out-of-tune engine runs rough, causing the shift lever assembly to vibrate.

Body Booming Noise

This type of noise is felt as a pressure in your ears, and its origin is often unknown to you. It increases in volume with the vehicle speed. It occurs within a relatively narrow vehicle speed range centered around 10 km/h or around 50 rpm if associated with engine speed.

NOTE

As you may have experienced, when you climb a high peak or drive through a tunnel at high speeds, rapid changes in the atmospheric pressure applies pressure to your eardrums. This may cause discomfort in your ears. The body booming noise applies similar pressure to your ears. This is caused by large fluctuations of air pressure in the interior of the vehicle.

Main Causes

- Out-of-tune engine
- Inertia due to reciprocating motion of pistons, or imbalance in engine
- Unbalanced propeller shaft joint angle
- Resonance in the exhaust pipe
- Exhaust noise
- Resonance in auxiliary engine components
- Vibration due to torsional stresses on the propeller shaft and drive shafts

Mechanics of Noise Development

1. When a joint angle exists in the propeller shaft, there are two torque fluctuations for every revolution of the propeller shaft. These fluctuations become larger as the joint angle increases.
2. At certain vehicle speeds these torque fluctuations vibrate the drivetrain, and are transmitted through the rear suspension arm bushings or springs, causing the body panels to vibrate. This results in the body booming noise.

Vibration During Braking

The dashboard, steering wheel, and seats vibrate abruptly upon braking. A pulsation is felt on the brake pedal at the same frequency as this vibration. Although the frequency is similar to that of body shake, the amplitude of this vibration is greater. It occurs mostly when you apply the brakes while driving at intermediate to high speeds.

Primary Causes

- Excessive run-out of disc brake rotors
- Different thickness of disc rotors
- Excessive run-out of brake drums
- Run-out of rear axle shaft flange

Mechanics of Noise Development

1. Any run-out on the disc brake rotors or drums causes the disc padsor shoes to vibrate when the brakes are applied.
2. These vibrations are then transmitted through the hydraulic system, causing the brake pedal to pulsate.
3. The disc brake rotors are also caused to vibrate simultaneously,causing the steering knuckles, axle shafts, or hubs to shake both vertically and in the fore-and aft direction.
4. These vibrations of the axle shafts are transmitted through the suspension to the body, causing the body to resonate and thus amplifying the vibrations. These vibrations are similar to body shake.

Brake Squeak

There are two types of squeak: one is a high-pitched shriek, and the other is a low-pitched growl. These noises occur when the brake pedal is depressed very hard, almost to the point of locking up the wheels. In disc brakes a squeak may also occur on light braking.

Main Causes

- Fluctuations in brake pad friction or shoe friction (due to hardening of the friction material).
- Resonance in the brake rotors, drums, or backing plates due to lack of rigidity in those components.

Mechanics of Noise Development

Disc Brakes

1. When the brakes are applied, the friction generated by the disc pads and rotors cause the disc pads to vibrate.
2. The disc rotor resonates with this vibration, creating noise.

NOTE

Some disc brakes use rubber-coated anti-squeal shims, and some use double-layered anti-squeal shims. Another method to reduce the brake squeal is to apply disc brake grease to the back of the pads.

Types of Wind Noise

Wind Noise Generated by the Body Surface

As air flows along the surface of the vehicle, a disturbance is created, and eddies form. The noise thus generated leaks in through gaps around the window glass, etc. and is transmitted through parts with low sound deadening properties, causing noise inside the vehicle. The following are considered to be causes of noise generated at the body surface.

1. Projections or level differences, etc. On the body which cause air molecules to separate from the airflow.
2. Collision of air with the body's surface as it flows.
3. Turbulence at the boundaries between disparate streams of air, etc.

Wind noise is a composite of all these different noises, and its manifestations are extremely complex.

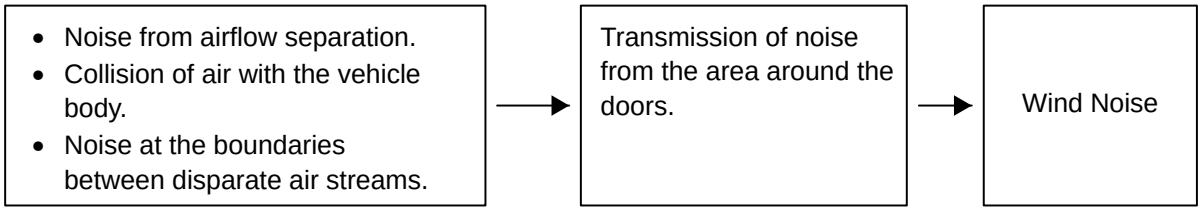

Mechanism of Noise Generation Due to Turbulence in the Air Flow at the Body Surface

Aspiration Noise

This is wind noise, but it differs slightly in the mechanism by which it is generated in that it is an aspiration noise. When driving at high speeds, separation of air from the air stream causes the air pressure inside the vehicle to be lower than the outside air pressure. If there are gaps at the weatherstrips or panel joints, etc., the pressure forces air to flow out of the vehicle. This air makes noise in the process of escaping from the vehicle and as it comes out, it interferes with the flow of air over the vehicles outside surface, which also generates noise. These noises penetrate inside the vehicle and raise the noise level in the interior.

TIP

The source of this type of noise may be identified with a vehicle in a static state in your dealership by pressurizing the passenger compartment of the vehicle.

- Start the vehicle (so the blower runs as fast as it is able)
- Set the fan speed to the FRESH, HIGH (maximum) position
- Set the flow control mode to “PANEL Mode” (directs air flow at the face level)
- Stuff shop towels into the body exhaust vent(s)
- Confirm that all windows and doors are closed tightly
- Listen with a stethoscope along the window (or door) area where the wind noise has been identified as emitting from

Identifying Wind Noise

Wind noise can be heard as airflow hissing in the window or door areas. It occurs usually at high speeds. Changes in the vehicle speed or direction of the wind may alter this noise. Usually the volume of the noise increases with the vehicle speed, and occasionally becomes inaudible dependent upon the wind direction.

Main Causes

- Air disturbances created by irregularities in the vehicle body
- Air leaking through gaps between body panels

Mechanics of Noise Development

Noises Created by Air Disturbances Due to Body Irregularities

When air flows over protrusions or recesses on the vehicle surface, air disturbances are created behind them. The noises created by these disturbances then enter the passenger compartment through the doors or windows.

Aspiration

At high speed, the air pressure in the interior of the vehicle becomes lower than that of the atmosphere. When this low-pressure air leaks out through gaps in the weather-strip or body panels, and comes into contact with the exterior air flow, noise is generated.

Important Points in Diagnosis

A certain amount of wind noise cannot be avoided simply because of the mechanism that generates it during driving. Besides the driving conditions and the speed of travel, external factors (such as wind direction, wind speed, place where the vehicle is driven, etc.) can have a great influence on wind noise. For this reason, it is important to determine of the wind noise identified by the customer has been correctly interpreted and to confirm that a real problem exists by conducting a thorough check.

It is also important to determine if the wind noise identified by the customer is due to accessories mounted on the outside of the vehicle (such as a roof rack, side visor, etc.) or if the noise occurs under special conditions. For example, opening of the sunroof, or raising the antenna, etc., all cause added wind noise, so it is important to have the customer describe the conditions under which the noise occurs.

Diagnostic Procedure for Wind Noise Concerns

Describe the Specific Occurrence Conditions

1. Determine the specific occurrence conditions either by having the customer describe them or by test driving the vehicle. In particular, when trying to specify the type of noise, it is important to clarify what the customer's complaint is by taking a drive together with him or her.
2. When a noise has been confirmed, it is important to clarify the occurrence conditions and driving conditions (as, for example, the wind direction, wind speed, vehicle speed, place the vehicle is being driven, the weather conditions, the temperature, and whether the wipers or sunroof are operating at the time, etc.).
3. Confirm whether accessories are installed or not, and if so, check whether or not they are the cause of the wind noise. If necessary, the noise should be checked with the accessories removed.

Locate the Cause of the Problem

Tape Suspected Noise Area

1. Attach adhesive tape along all areas that are likely to cause wind noise.
   - Panel joints
   - Protrusions
   - Molding joints
   - Door mirrors

Drive the vehicle and check that wind noise is no longer audible. If it is audible, attach tape along other areas and test again.

Locate the Cause of the Problem

1. Remove tape from one area at a time. (Repeat until wind noise is audible.)
2. Tear a strip of tape into several pieces and attach them along the suspected area to pinpoint the exact location.
3. Repeat removing and attaching smaller pieces of tape, one at a time, until you find a place where wind noise is audible without tape and disappears when the tape is reapplied.
4. Once you identify the place where the sound originates, seal that place using following components:
   - Butyl tape
   - Body sealer

Visual Check of the Parts Causing the Noise

1. Check weather-strips for faulty installation, deterioration, break-age, etc. to determine if they seal poorly.
2. Check the installation condition of the moldings and protectors, whether any of them are coming off, are loose or are pushed in, etc.
3. Check the door glass and glass runs as well as the seal of the weather-strip around the windows.
4. Check the installation condition of the outside mirrors and inner garnish for looseness, rattling, improper sealing, etc.
5. Check the fit of each body panel.
   Check that adjoining panels are flush with each other with a proper gap in between.

Squeaks, Rattles, & Interior Noise

What are "Squeaks & Rattles?"

The noise heard inside the vehicle caused by interference or vibration of parts while it is running or stopped or when a component is operated (example: opening or closing a door) is called "Squeaks & Rattles." "Squeaks & Rattles" are classified differently than those sounds transmitted from the engine or generated from the wiper motor. The causes are classified into design and manufacturing factors. The types of noise tones are classified into 3 types: squeaks, rattles and vibration noise.

Noise Sources and Types

GENERAL NAME		TONE	CAUSE	TYPICAL EXAMPLE	
				AREA	COMPONENT
Interior	Rattles	• Rattles • Knocking • Clatter • Flapping • Pat • Popping Clicking	Noise generated by parts hitting each other	• Instrument panel • Door • Seat	• Instrument panel x Wiring harness • Window regulator x Door panel • Play of seat track
	Squeaks	• Squeaks • Creak • Rubbing	Noise generated by parts rubbing each other	• Instrument panel • Instrument panel • Door	• Instrument Panel x • Meter cluster • CD player x Bracket Door trim x Door panel
	Vibration Noise	• Vibration • Buzz	Noise generated by vibration	• Instrument panel • Instrument panel	• Instrument panel x Steering column upper cover • Glove compartment x Blower resistor wire
Exterior	Rattles	• Rattles • Knocking • Clatter	Noise generated by parts hitting each other	• Luggage compartment • Chassis • Chassis	• Play of luggage compartment door hinge • Rear coil spring x Spring seat • Muffler support x Muffler bracket
	Squeaks	• Squeaks • Bushings • Creak • Rubbing	Noise generated by parts rubbing each other	• Chassis • Bumper • Fuel tank	• Rear stabilizer bushing x Stabilizer bar • Bumper extension x Body • Fuel tank band x Tank
	Vibration Noise	• Vibration	Noise generated by vibration	• Chassis • Transmission • Body	• Heat insulator x O2 sensor • Play of transmission gear shift rod • Quarter panel x Jack carrier

There are three main reasons why repair of “Squeaks & Rattles” is difficult.

- First is confirming the customer’s complaint is difficult.
- Second is the difficulty in locating the source of the noise.
- Third is to affect the repair to the satisfaction of the customer.

Although sufficient consideration on “Squeaks & Rattles” is made when a vehicle is designed, there are cases when customers subjectively complain

even if the sounds are not caused by malfunctions. The most important point in trouble shooting is to identify if the problem is clearly a malfunction or if it is a normal sound but an annoyance to the customer. The customer's complaint must be verified and analyzed. Be certain to understand the operating conditions when the concern is experienced.

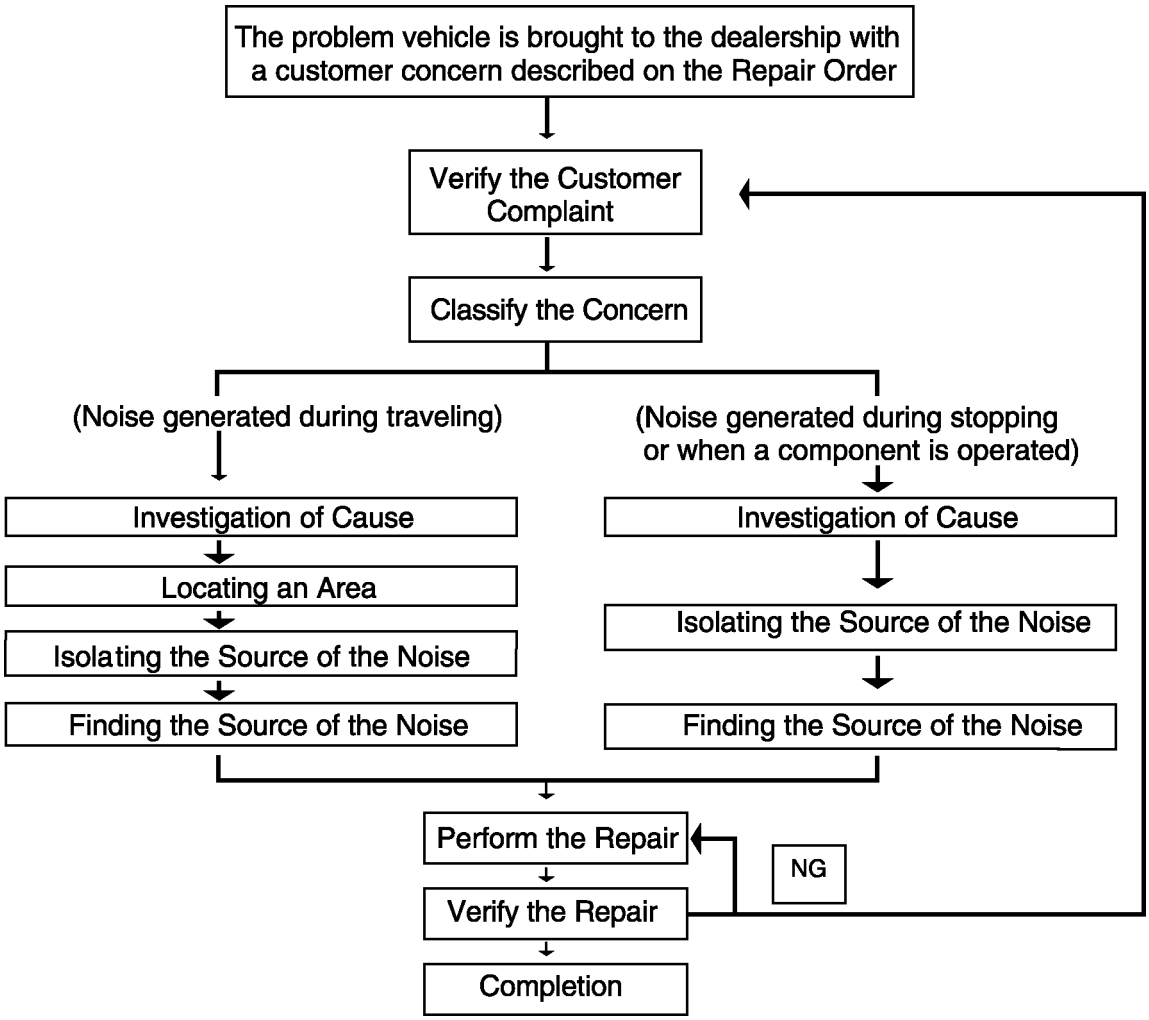

Diagnosis The first step of troubleshooting is to correctly understand the customer's complaint. For this reason, asking questions regarding the content of the complaint is extremely important. Lexus has developed a customer interview sheet to help.

The following 7 points should be determined.

ITEM		EXAMPLE
1.	Type of noise	Squeaks, Rattles, Vibration, etc.
2.	Direction of the noise	Instrument panel, left front door, luggage compartment, etc.
3.	Vehicle condition	During stopping, starting, braking, constant speed traveling, etc.
4.	Road condition	Paved road, cobblestone road, wavy road, slope, etc.
5.	Accessory operating condition	Position of heater control lever, when the power window or wiper is operated, etc.
6.	Time and weather (*1)	Time: Early morning, mid-day or at night Weather: Fine, cloudy or rainy days Temperature: Hot or cold (high or low humidity)
7.	When the problem first noticed	From the new car, after installing accessories, etc.

Plastic parts such as the instrument panel are subject to deformation due to temperature and humidity, these factors affect the noise. For example, squeak sounds of plastic parts often disappear when the temperature and humidity are high.

Checking Symptom

The purpose of the symptom check is to confirm the content of customer's complaint by road testing the vehicle or by operating the suspected functional component and using the check sheet.

Whenever possible, ask the customer to join the drive test to confirm the problem jointly. If a road similar to the road condition of the customer's complaint is not available near your dealership or the customer cannot identify a road condition that causes the noise, most of noises can be reproduced by carrying out a road test as described below.

OPERATING CONDITION		REPRODUCING SOUND
1.	Start and stop of engine	Rattles
2.	Engine racing	Vibration noise
3.	Starting and stopping the vehicle	Squeaks
4.	Turn	Rattles
5.	Driving over a bump	Squeaks
6.	Paved, smooth road	Squeaks, Rattles and Vibration noise
7.	Cobblestones and wavy road	Squeaks, Rattles and Vibration noise

Investigation of Cause

When the content of complaint has been confirmed, reproduce the noise in a static condition.

First, locate an area where the noise is most prominent and then isolate the source of the noise.

METHOD	PROCEDURE	APPLICABLE SOUND		
		SQUEAKS	RATTLES	VIBRATION NOISE
1. Visual check	Visually check for possible noise source	—	○	—
2. Functional component operating method	To reproduce the noise by operating a functional component	○	○	○
3. Tapping method	Tap a suspicious area (instrument panel, door body, etc.) to reproduce the noise	○	○	○
4. Swinging method	Swing a suspicious area (bumper, door, body, etc.) to reproduce the noise	○	○	○
5. Cover opening / Closing method	Open and close a door or cover to reproduce the noise	○	○	○

(2) Isolating the source of the n

METHOD	PROCEDURE	APPLICABLE SOUND		
		SQUEAKS	RATTLES	VIBRATION NOISE
1. Visual check	Visually check for possible noise source	—	○	○
2. Tactile method	Touch parts of the noise source area to find a part that eliminates the noise	—	○	○
3. Insertion method	Insert a thickness gauge or other thin item between parts to find a position that eliminates the noise	○	—	—
4. Push/pull method	Push and/or pull parts near the source of the noise to find a part that eliminates the noise	○	○	○
5. Lubrication method	Apply lubrication spray to stop the noise	○	—	—

Accurate information can be derived by asking the right question

1. What kind of noise is audible?	Example: Rattle, Squeak, Buzz, Click, Creak, Squeal, Rolling (as in a loose part in a cavity), Abnormal operating noise.
2. What are the road and driving conditions when the noise is audible?	Example: Severe bump only, railroad track crossing, moderately bumpy roads, at highway speeds, etc.
3. When is the noise audible?	Example: During starting, when stopping, with engine idling, etc.
4. Where is the sound coming from?	Example: Instrument panel, left front door, center console, rear package tray, etc.
5. Is noise affected by the operation of any vehicle system?	Example: Position of heater control lever, door window partially down, windshield wipers on, when closing door, etc.
6. Does the time of day or the weather conditions affect noise? (Some interior noises are affected by humidity).	Time: Early morning, mid-day, at night. Weather: Hot days, cold days, high temperature or humidity.
7. When was the problem first noticed?	Example: Since car was new, after radio was installed, since picking up from body shop, etc.

Interior Noise

Diagnostic Procedure

An organized and systematic procedure is important in all types of diagnosis. It is the most efficient/cost effective way to resolve concerns the first time.

A good systematic diagnostic procedure is critical because the symptoms may not clearly pinpoint the source of the noise. It will successfully resolve difficult interior noise concerns just as it does with electrical concerns.

Elements incorporated in a systematic diagnostic procedure are:

- An organized process of elimination which prioritizes activities to quickly isolate the concern.
- A thorough visual inspection for obvious conditions and clues to help diagnose the concern.

Step #1: Verify the Customer Concern

Verification of the customer concern is a key starting point in an interior noise diagnostic procedure for two reasons:

- If the customer concern cannot be verified, a plan can be implemented that involves satisfying the customer through consultation or returning the vehicle for service when the concern can be duplicated.
- It is important that the technician experiences exactly what the customer is concerned about and knows what is involved to satisfy them.

The verification process should include a thorough customer interview and test drive.

Customer Interview Sheet

As a tool in this verification process, Lexus has developed a customer interview sheet to help the technician solve one of the largest problems identified in NVH concerns; poor communication between the customer and the technician.

Good communication skills include:

- Description or terminology that means the same thing to all parties involved.
- Time to help the customer clarify the concern. (The customer is not expected to know the technical terms of the automotive industry).
- Information collected in an organized manner.

The interview process is designed to help the customer focus on details of the concern and vehicle conditions when the concern occurs. The customer should be made aware of the key role they play in resolving the concern.

The customer interview sheet is designed to be as short and concise as possible. The information is collected and divided into the following areas:

- Customer Data
- Vehicle Data
- NVH Data

NVH Data

NVH data is organized to provide the details of the concern and data on conditions present when the concern occurs.

Begin the interview by asking the customer to classify the concern by selecting one or more of the following:

- Noise
- Vibration
- Harshness

If the customer's classification of the concern includes Vibration or Harshness, refer to the NVH diagnosis materials for additional assistance.

Standard terminology used to describe noises include squeak, rattle or wind noise. Specific types of noise within these areas can include descriptive terminology such as buzz, click, creak, snap, clunk, squeal, rolling (as in a loose part in a cavity), and abnormal operating noise.

The Operating Condition section of the interview sheet is designed to collect data for the following subjects:

- Operating conditions
- Vehicle conditions
- Road conditions
- Weather conditions

Each of these areas have specific conditions to select which will provide the technician with the details necessary to duplicate the concern.

The interviewer should cover all areas that apply to the concern. N/A should be entered in areas that do not apply, indicating to the technician that the customer considered the subject and did not overlook it.

Step #2: Classify the Concern

Once the concern has been classified as a squeak, a specific diagnostic approach can be applied which will identify the source of the noise.

Interior squeaks and rattles are usually not as difficult to repair as they are to find. The difficulty in finding the source of a noise is caused by the many possible transmission paths of the noise. As a result, people sitting in different locations in the vehicle may have different opinions on the location of the noise.

Using a combination of road and static test procedures, the technician must reproduce the noise and narrow down the areas which may be causing it in order to pinpoint its location.

Step #3: Road Test

It is important for the technician to road test the vehicle during the diagnostic process. Diagnostic road testing is done after the concern has been verified and allows the technician to focus on specific test parameters that will help in reproducing and isolating the noise. Customers are helpful in verifying the concern but do not need to be part of the complete diagnostic process.

The road test is designed to get the most information in the shortest amount of time. During the road test the technician duplicates driving conditions identified on the customer interview sheet to reproduce the concern. This will allow the technician to listen to the noise and locate the general areas it is coming from.

For example:

Using the information on the customer interview sheet illustration, the technician would focus his road test on driving over a rough road surface between 20 and 40 mph.

Here are some specific road test examples that are helpful in isolating interior noise concerns.

Acceleration and Braking

Accelerate quickly to 5-7 mph and stop quickly. Repeat several times. Certain interior squeak noises as well as suspension groans and clunks may be heard using this technique.

Turning

Make a number of right and left turns at 2-15 mph. Loose objects, such as an extra screw in a door cavity, can be heard this way.

Cruising on Rough Road Surfaces

The majority of interior noises occur when driving on a rough road surface. Choose a road with small pot holes or surface irregularities to reproduce the customer's concern.

Step #4: Pinpoint Diagnosis

When the approximate location of the noise has been established, the noise must be reproduced in the stationary vehicle to help in pinpointing the diagnosis. With no background road noise the conditions are ideal for locating the exact source. Many noises can be reproduced in a stationary vehicle by using the following Static Testing methods.

Static Testing Procedures

Using a hand, the technician carefully taps in the area of the noise source found during the road test.

Impact Method

Start by tapping very gently and increase the force of the tap as needed to reproduce the noise.

This tapping technique requires some practice because tapping too hard will cause noises that would never be reproduced in the vehicle while driving. Tap just hard enough to reproduce the sound taking extreme care not to damage the surface being worked on.

Change the direction of the taps from top to bottom, right to left, front to rear, etc.

On the doors, tap the arm rest several times. Tap the entire door trim panel varying the force of your taps. Rattles from door lock knobs, linkages, window tracks and wire harnesses and connectors may be found in this manner.

Jouncing Method

Squeaking noises can be reproduced using the jouncing method. Squeaks are produced when adjacent pieces touch each other and there is relative movement between the pieces.

The jouncing method simulates a car in motion and by varying the force and direction of the jouncing action, squeaks can be reproduced. Squeaks from A-pillars, cowl, rocker panel areas, C-pillars and rear quarter panel areas can be found using this method.

NOTE

In some situations, it may not be possible to recreate the concern in a static situation. Some interior noises are caused by resonance with another vibrating force, such as a rotating tire, driveshaft or engine. In these conditions the concern can only be duplicated at the specific frequency that the two components resonate called the resonance point. This frequency will only be generated during vehicle operation.

Once the noise is reproduced in the shop, the next step is to pinpoint the diagnosis by locating the exact source.

A sound will stop when the item making it is touched. It will also change when something attached to it is touched. With this in mind, the following methods of isolating and pinpointing an interior noise can be used in conjunction with the noise reproduction techniques discussed in the previous section. Use these techniques while tapping the component to reproduce the noise.

Finger Touch Method

As you tap with one hand, use your other fingers to apply force against the instrument panel, interior garnish, door panels, etc., and continue moving over the area until the sound stops. If necessary, use a screwdriver to reach areas that cannot be reached by hand. If the noise changes, but does not go away when an area is touched, the noise source is physically connected to that area.

Insertion Method

In gaps which are too small for fingers or a screwdriver, insert a feeler gauge or other thin item. The noise source can often be touched and therefore located using this method. Insert the feeler gauge into the gap between parts at several locations until the noise stops.

Pull Method

Hook your fingers onto a part and gently pull on it. Do the same at different sections until you come to a point where the noise stops. When the noise stops or changes, the part making the noise is connected to the part being pulled.

Step #5: Perform the Repair

Once the concern has been pinpointed, the repair is often obvious. It is important though that the repair:

- Does not detract from the appearance of the area being repaired.
- Can be done quickly.
- Does not hamper the operation of any accessory systems.
- Is long lasting.

An interior noise repair kit is available through the Lexus parts system. Its contents, and other suggested repair materials, are listed below:

Felt Felt with an adhesive backing is supplied in two thicknesses, 0.030 inches and 0.060 inches. Felt is used to provide a buffer between two adjacent pieces of plastic to prevent squeaking or as a cushion between two pieces of metal to prevent them from rattling. Generally, use the thinnest material that will do the job. This will help prevent too tight a fit between the parts.

Urethane Foam Two thicknesses of urethane foam tape are supplied, 0.125 inches and 0.250 inches. Foam tape is primarily used to wrap objects such as wire harnesses or connectors to provide insulation and prevent a rattle with adjacent body parts.

Additional Suggested Items

The following items are not supplied in the kit, but are readily available.

Vinyl Tape "Electrician's Tape" is useful for wrapping items to prevent rattles. It may be layered to reduce clearances and it provides a cushion between two metal pieces.

Paraffin Paraffin wax is used as a lubricant between plastic parts. In areas where a piece of felt would be unsightly, such as between a safety pad and a door trim panel, lubricating the pieces with paraffin will stop squeaks.

Talcum Powder Talcum powder can be used as a lubricant between plastic and leather parts to eliminate a scrunching noise.

Step #6: Verify the Concern has been Repaired

This is the critical last step in the diagnostic procedure which will guarantee customer satisfaction. After repairing the vehicle, road test it again simulating the same test parameters used during classification, and try to reproduce the noise. If you cannot objectively verify that the concern has been resolved, then the opportunity exists to go back through the process to find the concern without the customer's involvement.

When the concern is successfully resolved and verified, the vehicle is ready to be returned to the customer.

Notes

Appendix A

ACRONYM DEFINITIONS

ACRONYM	DEFINITION
A/T	Automatic Transmission
ABS	Anti-Lock Braking System
ACIS	Acoustic Control Induction System
ADA	Automobile Dealers Association
AH	Amp-Hours
AHC	Adjustable Height Control
AI	Artificial Intelligence
APS	Accelerator Position Sensor
ASE	National Institute for Automotive Service Excellence
ASL	Automatic Sound Levelizer
ATDC	After Top Dead Center
ATF	Automatic Transmission Fluid
AVC LAN	Audio Visual Communication - Local Area Network
AVS	Adaptive Variable Suspension
BBDC	Before Bottom Dead Center
BDC	Bottom Dead Center
BEAN	Body Electronics Area Network
C02	Carbon Dioxide
CA	Cranking Amps
C-BEST	Customizable Body Electronic System
CCA	Cold Cranking Amps
CD	Compact Disc
CO	Carbon Monoxide
DIS	Direct Ignition System
DLC1	Data Link Connector 1
DLC2	Data Link Connector 2
DLC3	Data Link Connector 3
DOHC	Duel Over Head Cam
DTC	Diagnostic Trouble Code
DTM	District Technical Manager
DVOM	Digital Volt/Ohm Meter
EBD	Electronic Brake Distribution
ECT	Electronically Controlled Transmission
ECT-i	Electronically Controlled Transmission with intelligence
ECU	Electronic Control Unit
EGR	Exhaust Gas Recirculation
ELR	Emergency Locking Retractor
EMAS	Electronically Modulated Suspension System
EMV	Electro Multi-Vision Display
E-Shift	Electronic-Shift

ACRONYM	MEANING
ETCS-i	Electronic Throttle Control System with intelligence
EWD	Electrical Wiring Diagram
FTS	Field Technical Specialist
GPS	Global Positioning System
HC	Hydrocarbons
HID	High Intensity Discharge
IC	Integrated Circuit
IQS2	Initial Quality Study 2
J/B	Junction Block
LED	Light Emitting Diode
LFV	Lateral Force Variation
LH	Left Hand
LSS	Lexus Service Survey
MIL	Malfunction Indicator Light
N0x	Oxides of Nitrogen
NCF	New Car Features
NVH	Noise, Vibration and Harshness
NVSDS	New Vehicle Sales and Delivery Survey
O/D	Over-drive
OBD	On-Board Diagnostic
OBD-II	On-Board Diagnostic-II
OCV	Oil Control Valve
OM	Owner's Manual
PDS	Pre-Delivery Service
PP100	Problems Per 100
R/B	Relay Block
RA	Reserved Capacity
RFV	Radial Force Variation
RH	Right Hand
RM	Repair Manual
RO	Repair Order
RSM	Regional Service Manager
SRAM	Static Random Access Memory
SRS	Supplemental Restraint System
SSC	Special Service Campaign
SSM	Special Service Materials
SST	Special Service Tools
STS	Service Training Specialist
SUV	Sports Utility Vehicle
SW	Switch
TAS	Technical Assistant System

ACRONYM	MEANING
TDC	Top Dead Center
TFPR	Technical Field Product Report
TFT	Thin Film Transistor
TFV	Tractive Force Variation
TIS	Technical Information System
T-LEV	Transitional Low-Emission Vehicle
TMC	Toyota Motor Corporation, Toyotashi, Japan
TMMC	Toyota Motors Manufacturing, Canada, Cambridge, Ontario
TMS	Toyota Motor Sales, USA, Inc.
TPS	Throttle Position Sensor
TRAC	Traction Control System
TSIB	Technical Service Information Bulletin
TTC	Toyota Technical Center, USA, Inc.
T-TEN	Toyota Technical Education Network
U/D	Under-drive
VDI	Vehicle Dependability Study
VIN	Vehicle Identification Number
VPA	Voltage Pedal Angle
VPA2	Voltage Pedal Angle 2
VSC	Vehicle Skid Control
VTA	Voltage Throttle Angle
VTA2	Voltage Throttle Angle 2
VVT-I	Variable Valve Timing with intelligence

ACRONYM	MEANING

REFERENCE MATERIAL

2000 LEXUS TECHNOLOGY APPLICATION CHART

FEATURES	ES300	GS300	GS400	LS400	SC300	SC400	FWD RX300	4WD RX300	LX470
Powertrain									
Engine	1MZ-FE	2JZ-GE	1UZ-FE	1UZ-FE	2JZ-GE	1UZ-FE	1MZ-FE	1MZ-FE	2UZ-FE
Certification	NLEV	T-LEV	T-LEV	T-LEV	T-LEV	T-LEV	NLEV	NLEV	
Size in Liters	3.0	3.0	4.0	4.0	3.0	4.0	3.0	3.0	4.7
Number of Cams	4	2	4	4	2	4	4	4	4
Number of Valves	24	24	32	32	24	32	24	24	32
Configuration	V6	I6	V8	V8	I6	V8	V6	V6	V8
Horsepower @ RPM	210@ 5800	220@ 5800	300@ 6000	290@ 6000	225@ 6000	290@ 6000	220@ 5800	220@ 5800	230@ 4800
Torque ft/lb@RPM	220@ 4400	220@ 3800	310@ 4000	300@ 4000	220@ 4000	300@ 4000	222@ 4400	222@ 4400	320@ 3400
ACIS	S	S	S	S	S	S	S	S	
VVT-i	S	S	S	S	S	S	S	S	
ETCS-i		S	S	S	S	S			S
Active Control Mount	S						S	S	
Transmission	U140E	A650E	A650E	A650E	A340E	A650E	U140E	U140F	A343F
Number of Gears	4	5	5	5	4	5	4	4	4
ECT-i		S	S	S	S	S			
ECT	S						S	S	S
E-Shift			S						
Snow Mode-Delay		S	S	S	S	S			
Snow Mode-2nd Gear							S	S	
2nd Gear Start									S
Viscous Center Coupling								S	
Limited Slip Rear Differential								O	
Locking Center Differential									S
Transfer Case									S
Steering									
Power Assist Rack & Pinion	S	S	S	S	S	S	S	S	S
Engine Speed Sensing	S						S	S	S
Vehicle Speed Sensing		S	S	S	S	S			
Manual Tilt	S				S		S	S	
Auto Tilt/Telescope		S	S	S	O	S			S
Suspension									
MacPherson Strut	S						S	S	
All Double Wishbone		S	S	S	S	S			
Front Double Wishbone									S
Rear Rigid Axle									S
AVS	O			O					S
Air Suspension				O					
AHC									S

S - Standard O - Optional DI - Dealer Installed

2000 LEXUS TECHNOLOGY APPLICATION CHART

FEATURES	ES300	GS300	GS400	LS400	SC300	SC400	FWD RX300	4WD RX300	LX470
Brakes									
Front Ventilated Disc	S	S	S	S	S	S	S	S	S
Rear Solid Disc	S	S	S				S	S	
Rear Ventilated Disc				S	S	S			S
Vacuum Power Assist	S			S	S	S	S	S	
Hydraulic Power Assist		S	S						S
Rear Proportioning Valve									
Brake Assist	with VSC	S	S	S					S
Electronic Brake Distribution									S
Safety									
Crumple Zones	S	S	S	S	S	S	S	S	S
Cabin Safety Cell	S	S	S	S	S	S	S	S	S
Door Beams	S	S	S	S	S	S	S	S	S
Safety Glass	S	S	S	S	S	S	S	S	S
Interior Trim Protection	S	S	S	S	S	S	S	S	S
Dual Front 2nd Gen. Airbags	S	S	S	S	S	S	S	S	S
Side Airbags	S	S	S	S			S	S	
Front Seatbelt Pretensioners	S	S	S	S	S	S	S	S	S
Front Seatbelt Force Limiters	S	S	S	S			S	S	S
ABS	S	S	S	S	S	S	S	S	S
TRAC	S	S	S	S	O	O	O		S
VSC	O	S	S	S					S
Headlights									
Projector					S	S			S
Parabolic Multi-Reflector	S	S	S	S			S	S	
High Intensity Discharge	O	O	O	O					
Daytime Running Lights	S	S	S	S	S	S	S	S	S
Windows/Mirrors									
UV & IR Cut Glass	S	S	S	S	S	S	S	S	S
Privacy Glass							S	S	S
Front Auto Up/Down	S								
All Auto Up/Down		S	S	S			S	S	S
Remote Down		S	S	S					
Inside Dimming Mirror	S	S	S	S	O	S	O	O	S
Outside Dimming Mirrors	Left	O	S	S	O	S	O	O	S
Outside Heated Mirrors	S	S	S	S	S	S	S	S	S
Reverse-Tilt Down Mirrors				S					S
Remote Down		S	S	S					

S - Standard O - Optional DI - Dealer Installed

2000 LEXUS TECHNOLOGY APPLICATION CHART

FEATURES							FWD	4WD	
	ES300	GS300	GS400	LS400	SC300	SC400	RX300	RX300	LX470
Security									
Inner Groove Key	S	S	S	S	S	S	S	S	S
Engine Immobilizer	S	S	S	S	S	S	S	S	S
Theft Deterrent System	S	S	S	S	S	S	S	S	S
Remote Entry	S	S	S	S	S	S	S	S	S
Panic	S	S	S	S	S	S	S	S	S
Theft Prevention Labels	S	S	S	S	S	S	S	S	S
Air Conditioning									
Automatic	S	S	S	S	S	S	S	S	S
Filter	O & DI	S	S	S	DI	DI	O	O	S
Dual Zone		S	S	S					
Rear Air Conditioning									S
Smog Sensor		S	S	S					S
Audio									
AM/FM ETR w/Cassette	S				S	S	S	S	S
AM/FM ETR w/Cassette + ASL		S	S	S	S	S			
Nakamichi Premium System	O	O	O	O	O	O	O	O	O
Glovebox CD Changer	O	O	O	O			O	O	
Integral CD Changer									S
Rear Glass Antenna + Diversity	S	S	S	S			S	S	
Auto Mast Antenna + Diversity					S	S	S	S	
Adjust Mast Antenna + Diversity									S
Convenience									
Navigation w/2 Updates		O	O	O					
Universal Transmitter	S	S	S	S	O	O	O	O	S
Trunk Pass-Through	S								
1-Stage Center Console					S	S			
2-Stage Center Console	S	S	S	S					S
3-Stage Center Console							S	S	
Powerport	1	1	1	1			2	2	3
C-BEST (Customized Body Electrical System)		S	S	S			S	S	S

S - Standard O - Optional DI - Dealer Installed

Customer Demographics By Model

Demographics

Lexus LX470 (Sport Utility) Sample Size: 106

%Male: 51%
%College Educated: 69%
Median Price Paid: $57,700
Median Income : $260,500
Median Age: 46
% with Children <18 in Household: 59%
% Married: 89%
% Leased: 38%

Lexus LS400/LS (Unspec) Sample Size: 373

%Male: 65%
%College Educated: 64%
Median Price Paid: $54,000
Median Income : $199,600
Median Age: 56
% with Children <18 in Household: 21%
% Married: 92%
% Leased: 44%

Lexus GS400 Sample Size: 431

%Male: 80%
%College Educated: 73%
Median Price Paid: $49,000
Median Income : $198,300
Median Age: 50
% with Children <18 in Household: 37%
% Married: 81%
% Leased: 51%

Lexus SC400 Sample Size: 142

%Male: 63%
%College Educated: 66%
Median Price Paid: $55,000
Median Income : $181,300
Median Age: 52
% with Children <18 in Household: 17%
% Married: 64%
% Leased: 53%

Lexus GS300 Sample Size: 385

%Male: 61%
%College Educated: 73%
Median Price Paid: $41,000
Median Income : $147,700
Median Age: 49
% with Children <18 in Household: 33%
% Married: 77%
% Leased: 53%

Lexus RX300 (Sport Utility) Sample Size: 371

%Male: 56%
%College Educated: 72%
Median Price Paid: $38,000
Median Income : $131,300
Median Age: 47
% with Children <18 in Household: 32%
% Married: 91%
% Leased: 41%

Lexus SC300 Sample Size: 170

%Male: 40%
%College Educated: 66%
Median Price Paid: $46,000
Median Income : $129,200
Median Age: 48
% with Children <18 in Household: 22%
% Married: 65%
% Leased: 50%

Lexus ES300/ES (Unspec) Sample Size: 293

%Male: 51%
%College Educated: 71%
Median Price Paid: $34,000
Median Income : $112,600
Median Age: 53
% with Children <18 in Household: 19%
% Married: 74%
% Leased: 48%

1990- 1999 LEXUS MODELS

VDS	MODEL	NAME	DESCRIPTION	ENGINE	TRANSMISSION	YEAR(s)	OBD/OBDII
VV22T	VZV21	ES250	4-DOOR HARDTOP	2VZ-FE	E52- A540E	1990- 1991	OBD
VK13T	VCV10	ES300	4-DOOR HARDTOP	3VZ-FE	E53- A540E	1992- 1993	OBD
GK13T	MCV10	ES300	4-DOOR HARDTOP	1MZ-FE	A541E	1994- 1995	OBDII
BF12G	MCV10	ES300	4-DOOR HARDTOP	1MZ-FE	A541E	1996	OBDII
BF22G	MCV20	ES300	4-DOOR HARDTOP	1MZ-FE	A541E	1997- 1998	OBDII
BF28G	MCV20	ES300	4-DOOR HARDTOP	1MZ-FE	U140E	1999	OBDII
JS47E	JZS147	GS300	4-DOOR SEDAN	2JZ-GE	A340E	1993- 1995	OBD
BD42S	JZS147	GS300	4-DOOR SEDAN	2JZ-GE	A350E	1996- 1997	OBDII
BD68S	JZS160	GS300	4-DOOR SEDAN	2JZ-FE	A650E	1998- 1999	OBDII
BH68X	UZS160	GS400	4-DOOR SEDAN	1UZ-FE	A650E	1998- 1999	OBDII
UF11E	UCF10	LS400	4-DOOR SEDAN	1UZ-FE	A341E	1990- 1994	OBD
UF22E	UCF20	LS400	4-DOOR SEDAN	1UZ-FE	A340E	1995	OBDII
BH22F	UCF20	LS400	4-DOOR SEDAN	1UZ-FE	A340E	1996	OBDII
BH28F	UCF20	LS400	4-DOOR SEDAN	1UZ-FE	A340E	1997	OBDII
BH28F	UCF20	LS400	4-DOOR SEDAN	1UZ-FE	A650E	1998- 1999	OBDII
JZ31C	JZZ31	SC300	2-DOOR COUPE	2JZ-GE	W58 - A340E	1992- 1995	OBD
CD32Z	JZZ31	SC300	2-DOOR COUPE	2JZ-GE	W58 - A340E	1996- 1997	OBDII
CD32Z	JZZ31	SC300	2-DOOR COUPE	2JZ-GE	A340E	1998- 1999	OBDII
UZ30C	UZZ30	SC400	2-DOOR COUPE	1UZ-FE	A340E	1992- 1995	OBD
CH32Y	UZZ30	SC400	2-DOOR COUPE	1UZ-FE	A340E	1996- 1997	OBDII
CH32Y	UZZ30	SC400	2-DOOR COUPE	1UZ-FE	A650E	1998- 1999	OBDII
GF10U	MCU10	RX300	LUXURY SUV 4X2	1MZ-FE	U140E	1999	OBDII
HF10U	MCU15	RX300	LUXURY SUV 4X4	1MZ-FE	U140F	1999	OBDII
HJ88J	FZJ80	LX450	LUXURY 4X4	1FZ-FE	A343F	1996- 1997	OBDII
HT00W	UZJ1OO	LX470	LUXURY 4X4	2UZ-FE	A343F	1998-1999	OBDII

Identification Plate

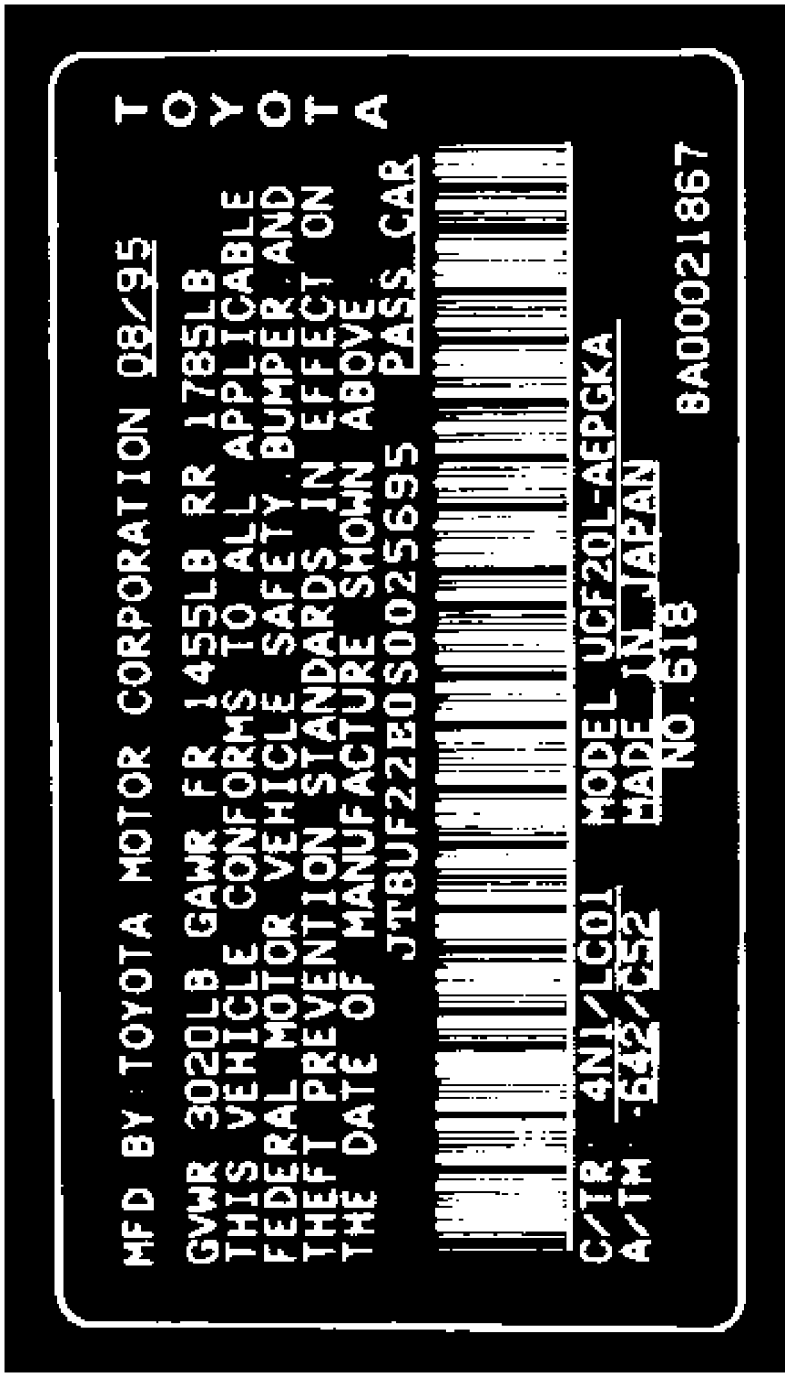

2000 LEXUS VIN IDENTIFICATION SYSTEM

J T 8 B F 2 8 G 8 Y 0 0 0 0 1 2 3

- J — World Manufacturer Identification (Japan TMC Lexus)
- T — Manufacter: T = Toyota
- 8 — Type of Vehicle: 8 = Passenger Vehicle; 6 = SUV
- B — Body Type: B = 4-door sedan; C = 2-door sedan; H = 4WD Wagon; G = Wagon
- F — Engine: F = 1MZ-FE (V6); D = 2JZ-GE (I6); H = 1UZ-FE (V8); T = 2UZ-FE (V8)
- 2 — Series/Model Number: 0 = LX 470; 1 = RX 300; 2 = ES 300; 2 = LS 400; 3 = SC 400/300; 6 = GS 400/300
- 8 — Restraint System
- G — Car Line: F = LS 400; G = ES 300; S = GS 300; X = GS 400; Z = SC 300; Y = SC 400; W = LX 400; U = RX 300
- 8 — Check Digit Internal Use Only
- Y — Model Year Y=2000
  - BF28G = ES 300
  - CD32Z = SC 300
  - CH32Y = SC 400
  - BD68S = GS 300
  - BH68X = GS 400
  - BH28F = LS 400
  - HT00W = LX 470
  - HF10U = RX300 (4WD)
  - GF10U = RX 300 (2WD)
- 0 — Plant Code
- 000123 — Plant Sequential Number
- VDS (Vehicle Description Section)
- Check Digit
- VIS (Vehicle Indicator Section)

2000 Models

MODEL	DESCRIPTION	VDS	ENGINE	TRANSMISSION/ TRANSAXLE
ES 300 MCV20	4-Door Hardtop	BF28G	1MZ-FE	U140E
SC 300 JZZ31	2-Door Coupe	CD32Z	2JZ-GE	A340E
SC 400 UZZ30	2-Door Coupe	CH32Y	1UZ-FE	A650E
GS 300 JZS160	4-Door Sedan	BD68S	2JZ-GE	A650E
GS 400 UZS160	4-Door Sedan	BH68X	1UZ-FE	A650E
LS 400 UCF20	4-Door Sedan	BH28F	1UZ-FE	A650E
RX 300 MCU10 MCU15	4-Door Wagon	GF10U (2WD) HF10U (4WD)	1MZ-FE	U140E U140F
LX 470 UZJ100	4-Door Wagon	HT00W	2UZ-FE	A343F

VIN SYSTEM INDENTIFICATION

For 1996 Model Year Onward

J T 8 B H 2 2 F 6 T 0 0 3 3 5 0 1

WMI (World Manufacturer Identifier)

VDS (Vehicle Description Section)

Check Digit

VIS (Vehicle Indicator Section)

Plant Sequential Number

Plant Code

Model Year
T: 1996 V: 1997 W: 1998 X: 1999

Check Digit
Internal use only

Car Line
Example:
F … LS400 S…GS300 X … GS400
G … ES300 U…RX300 Y … SC400
J … LX450 W…LX470 Z … SC300

Restraint System/Grade
Example: Passenger Vehicle
1 … Manual Belt
2 … Manual Belt w/airbag
8 … Manual Belt w/airbag and side airbag
Multipurpose Passenger Vehicle
0 … No Indicate

Series
Example:
0 … 100 series 4 … 40, 140 series
1 … 10, 110 series 6 … 60, 160 series
2 … 20, 120 series 8 … 80, 180 series
3 … 30, 130 series

Engine
Example:
D … 2JZ-GE
F … 1MZ-FE
H … 1UZ-FE
T … 2UZ-FE

Body Type/Drive Type
Example:
A … 2Dr Sedan 2WD G … 4DrWagon
B … 4Dr Sedan 2WD H … 4Dr Wagon 4WD
C … 2Dr Coupe 2WD

Type of Vehicle
6: Multipurpose Passenger Vehicle
8: Passenger Vehicle

Manufacturer
T … TOYOTA

World Source

VIN SYSTEM INDENTIFICATION

For 1995 Model Year And Earlier

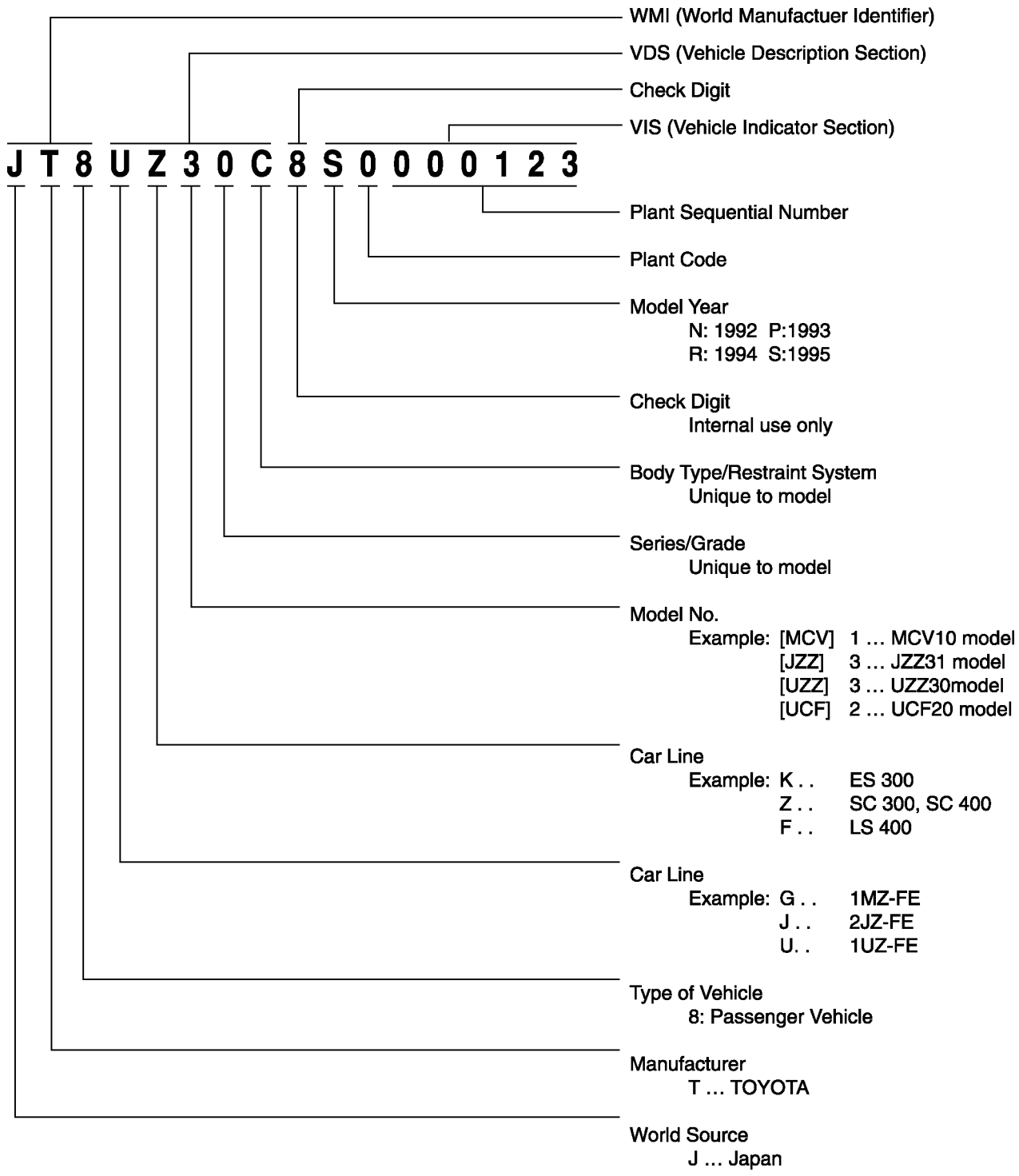

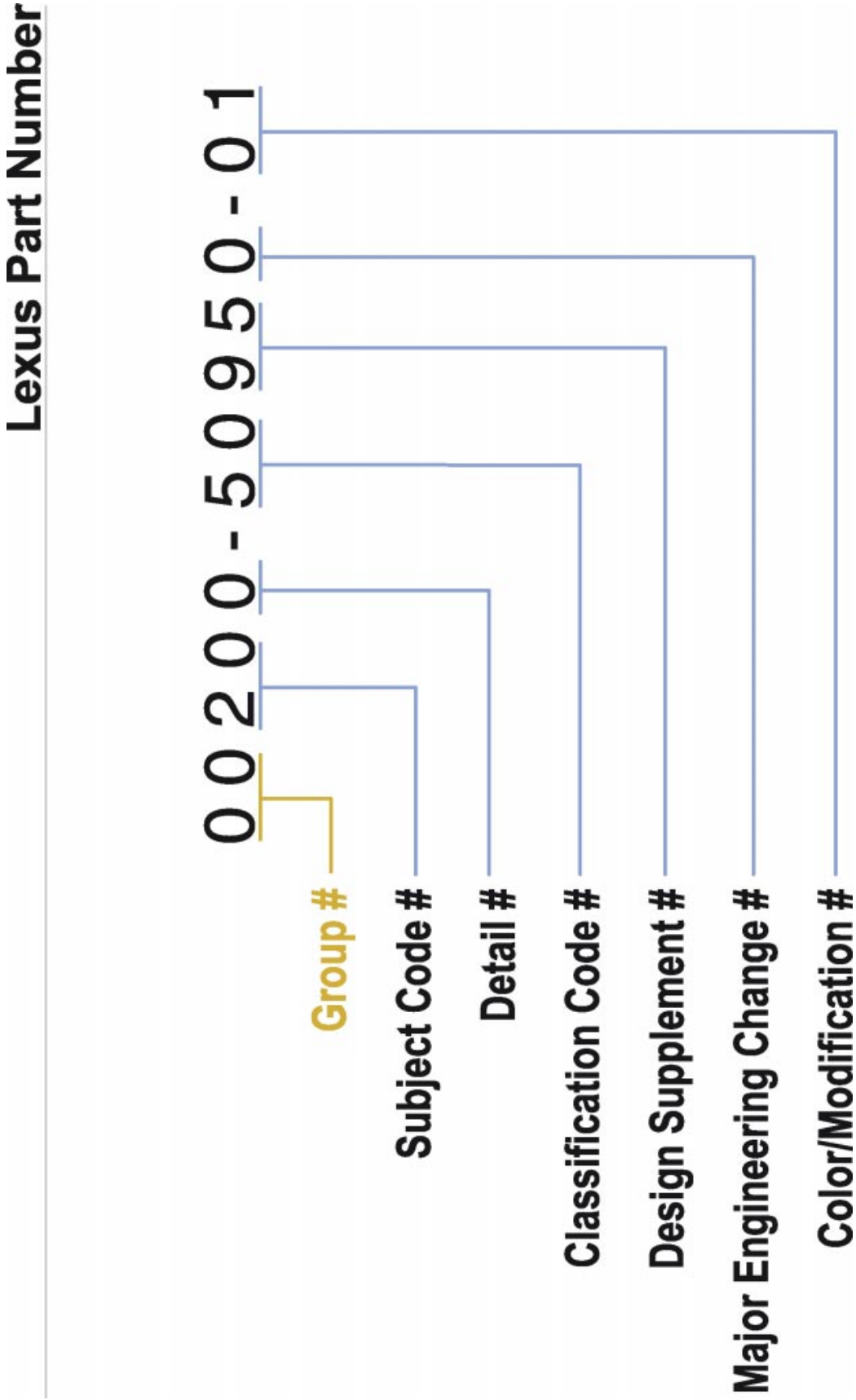
Lexus Part Number
00200-50950-01
Group #
Subject Code #
Detail #
Classification Code #
Design Supplement #
Major Engineering Change #
Color/Modification #

The Classification Code

First two digits of second five (6th & 7th digits)
- Identifies which engine if between 11 & 29
- Identifies which vehicle if between 31 & 89:

50 = LS 400
33 = ES 300
32 = ES 250
30 = GS 300
24 = COUPLES
60 = LX 450

Major Group Listings

1ST DIGIT \ 2ND DIGIT	0	1	2	3	4	5	6	7	8	9
0	Accessories Chemicals Paint Batteries				Repair Kits Gasket Sets Brake Pads Shim Kits				CD Changer Sunshades A/C Oil Trans. Fluid	Tools
1		Engine Unmoving Group Bearing Cylinder Head Engine Block Emission Label	Engine Unmoving Group Oil Pan PCV Engine Mounts	Engine Moving Group Rings Pistons, Rods Flywheel Camshaft Timing Belt, Valves		Lubricating System Oil Pump Oil Gauge	Cooling System Water Pump Pipes, Hoses Fan, Fan Motor Radiator Oil Cooler	Intake and Exhaust System Manifold Air Cleaner Exhaust Pipe	Catalytic Converter	Ignition System Distributor Cap Rotor Coil Engine Assembly
2			Fuel Injection Flow Meter Throttle Body Dashpot	Fuel Injection Fuel Pump Injectors Fuel Filters Regulator Fuel Hose Pipe		Exhaust Gas Recirculation EGR Valve EGR Hose Pipe Vacuum Valve		Alternator Regulator	Starter Relay Battery Plate	
3	Transaxle Assembly	Clutch Group Bearings Disc Rod Cylinder	Torque Converter Transmission Oil Cooler	Manual Trans. Internal Gears Shafts Nubs Syncros Shift Lever	Transmission Overdrive Group	Auto Transmission Assemblies Integral Components		Propeller Shaft Center Bearing Flexible Coupling		
4		Differential Group Carriers Gear Sets	Rear Axle and Wheel Axle Shaft Hub/Bearing Assy. Brake Discs (rear)	Front Axle Drive Shaft Steering Knuckle Ball Joint Brake Discs (front)	Power Steering Gear Assembly P/S Pump P/S Oil Cooler Power Brakes Actuator, Brake Lines	Steering Column and Wheel Air Bag Tie Rods Tilt/Telescope	Parking Brake Lever Cable Shoes	Brake Group Master Cylinder Pedal Lines Calipers	Suspension Group Air Ride Springs Shocks, Struts Bushings, Arms Stabilizer Bar	
5		Frame Group Crossmembers Under Covers Spare Wheel Carriers	Frame Group Bumper Arm Bumper Cover Suspension Cushion Bumper Molding	Front Body Group Grille Rad. Support Hood Hinge Assembly Front Fender		Cowl Group Instrument Panel Air Ducts Safety Pad Glove Box Registers A/C Controls	Cowl Group Windshield Retainers Spacers	Floor Group Reinforcements Torque Box Members Braces	Floor Group Floor Plan Insulators Carpet Console Box	
6		Body Side Group Pillars Roof Rails Rocker Panel Quarter Panel	Body Side Group Pillar Garnish Weatherstrip Inside Roof Garnish	Roof Group Roof Panel Sunroof Trim/Garnish Headliner	Rear Body Group Speaker Grille Package Tray Luggage Compartment Rear Glass			Door Group Door Panel Speaker Grille Window Frame Trim Board, Weather- strip, Scuff Plate	Door Group Door Glass Check Assembly Hinge	Door Group Lock Set Handle Window Regulator
7		Seat Group Frame Covers Pads Cushions Springs Headrest	Seat Group Adjuster Power Seat Track Cover Armrest (rear)	Seat Group Seat Belts Passenger Air Bag	Interior Group Armrest Visor Assist Grip	Exterior Group Door Molding Windshield Molding Fender Molding	Exterior Group Spoiler Mudguard Rear Undercover	Fuel Tank Group Tank Pipe Hose Filler Lid Charcoal Canister	Accelerator Linkage	
8		Lamp Group Headlamps Tail Lamps Turn Signals License Lamp Vanity Lamp	Wiring Group All Harnesses Fuse Block Repair Splice	Meter and Clock Group Speedometer Combo Meter Fuel/Water Gauge Clocks	Switch Group All Switches	Wipers Washers Cigarette Lighter Power Seat Motor	Radio Antenna Horn Telephone	Heater and Mirror Group Blower Servo Airduct Mirror Assembly	Cruise Control Air Conditioner	Sensors Computers Remote Keys
9	Semi-Standard Parts Hardware Spark Plugs and Wires	Bolt Group	Bolt Group	Screw Group	Nut and Washer Group	Rivet, Pin and Key Group	Attachment and Fitting Parts Group			V-Belts

Engine System Identification

1 UZ - F E

Design Generation

Engine Family

UZ = LS400, GS400, SC400, LX470

JZ = GS300, SC300

VZ = ES250, ES300

MZ = ES300, RX300

FZ = LX450

Valve Train

F = 4 valves per cylinder with narrow angle
usually has scissors gear drive mechanism
Cams turn opposite direction of each other

G = 4 valves per cylinder wide angle
Cams driven independently
Cams turn in same direction

TECHNICAL ASSISTANCE QUICK REFERENCE CARD

PROCEDURE

Using your Lexus TDN System to obtain technical assistance for 1990 through current year Lexus models is a simple, three step procedure:

- Select the Technical Assistance System from the main menu, type in the **VIN, System Code** which best describes the affected vehicle system (such as "cruise control system") and **Problem Code** which best describes the nature of the problem (such as "poor performance"). Press **ENTER** to transmit your request.
- When you have received your reply, select the publication you desire using the *gray* up or down arrow key and **ENTER**.
- To return to the *Select ETAS Reference* screen, simply press F10.

NOTES

- It is not necessary to supply multiple codes within a system (for example, "210" is sufficient for "automatic transmission", rather than using 211, 2121, etc. to obtain all information). Codes recommended for normal use are highlighted in burgundy.
- If you need further technical assistance, please contact the toll-free technical assistance telephone number (1-800-446-4740)

CODES

ETAS SYSTEM CODES
Describes the vehicle system (component or component group)

100 ENGINE
- 101 BLOCK
- 102 HEAD
- 103 TIMING COVER
- 104 OIL PAN
- 105 VALVE COVER
- 106 CRANKSHAFT
- 107 PISTONS/RODS
- 108 BEARINGS

110 STARTING/CHARGING
- 111 BATTERY
- 112 STARTER
- 113 IGNITION SWITCH
- 115 ALTERNATOR
- 116 REGULATOR
- 117 OTHER CHARGING PARTS

120 IGNITION
- 121 DISTRIBUTOR/COIL/IGNITER
- 122 SPARK PLUG WIRES
- 123 SPARK PLUGS
- 124 PRIMARY WIRING

130 FUEL(USE '199'FOR EFI)
- 131 FUEL TANK
- 132 FUEL PUMP
- 133 FUEL LINES
- 134 FUEL FILTER
- 135 FUEL INJECTORS

140 INTAKE/INDUCTION ('199'FOR EFI)
- 141 INTAKE MANIFOLD
- 143 AIR CLEANER

150 EXHAUST
- 151 EXHAUSTMANIFOLD
- 152 EXHAUST PIPES
- 153 MUFFLER/RESONATOR
- 154 TAILPIPE

160 EMISSIONS
- 161 CCO
- 162 EGR
- 163 PCV
- 164 EVAP
- 165 AIR INJECTION/AIR/AIR SUCTION
- 169 OTHERS

170 VALVE TRAIN
- 171 CAMSHAFT
- 172 TIMING GEARS/CHAIN/BELT
- 173 INTAKE VALVE
- 174 EXHAUST VALVE
- 175 LIFTERS/LASH ADJUSTERS
- 176 ROCKER ARMS/SHAFTS

180 LUBRICATION/COOLING
- 181 OIL PUMP
- 182 OIL FILTER
- 184 THERMOSTAT
- 185 WATER PUMP
- 186 HOSES
- 187 RADIATOR
- 188 COOLING FAN

190 ELECTRONIC CONTROLS
- 191 ECU
- 192 AIR FLOW METER
- 193 OXYGEN SENSOR
- 194 OTHER SENSOR/RELAYS
- 195 TEST EQUIPMENT
- 199 EFI SYSTEMS

200 TRANSMISSION/DRIVELINE

210 TRANSMISSION (AUTO)
- 211 CASE
- 212 TORQUE CONVERTER
- 213 OIL PUMP
- 214 VALVE BODY
- 215 PLANETARY GEAR SETS
- 216 INPUT/OUTPUT/COUNTER SHAFTS
- 217 SYNCHRONIZERS/HUGS
- 218 SHIFT LEVER/LINKAGE
- 219 BEARINGS/SEALS

220 TRANSMISSION (MANUAL)
- 221 CLUTCH
- 222 CASE
- 223 GEAR SETS
- 224 INPUT/OUTPUT/COUNTER SHAFTS
- 225 SYNCHONIZERS/HUBS
- 226 SHIFTLEVER/LINKAGE
- 227 BEARINGS/SEALS

240 DRIVELINE (FR)
- 241 DRIVESHAFT
- 242 DIFFERENTIAL/HOUSING
- 243 AXLES
- 244 BEARINGS/SEALS

250 DRIVELINE (FF)
- 251 DRIVESHAFT
- 252 DIFFERENTIAL/HOUSING
- 254 BEARINGS/SEALS
- 255 DRIVESHAFT/AXLES

270 ELECTRONIC CONTROL
- 271 COMPUTER
- 272 SOLENOIDS
- 273 SENSORS
- 274 WIRING

300 STEERING/SUSPENSION

310 STEERING
- 311 STEERING WHEEL/COLUMN
- 312 GEARBOX
- 313 LINKAGE
- 314 POWER STEERING PUMP/LINES
- 316 WHEEL ALIGNMENT
- 317 ELECTRONIC STEERING CONTROLS

320 FRONTSUSPENSION
- 321 SPRINGS
- 322 SHOCK ABSORBERS
- 323 CONTROLARMS/LINKS/ETC.

330 REAR SUSPENSION
- 331 SPRINGS
- 332 SHOCK ABSORBERS
- 333 CONTROLARMS/LINKS/ETC.

340 ELECTRONIC SUSPENSION CONTROL/AIR SUSPENSION

CODES HIGHLIGHTED IN BURGUNDYARE RECOMMENDED FOR SEARCHES

(Continued on reverse)

CODES (continued)

350 BRAKES
- 351 PEDAL/LINKAGE
- 352 FRONTDISC BRAKES
- 353 REAR DISC BRAKES
- 355 PARKING BRAKE
- 356 MASTER CYLINDER/LINES
- 357 POWER BOOSTER
- 358 ABS BRAKE SYSTEM
- 359 TRACTION CONTROLSYSTEM (TRAC/ABS)

360 WHEELS AND TIRES
- 361 ALUMINUM ROAD WHEELS
- 362 STEEL ROAD WHEELS
- 363 TIRES
- 364 COVERS/CAPS/TRIM

370 SPINDLES/BEARINGS

400 BODY
- 401 FRAME/CROSSMEMBER
- 402 COWL
- 403 ROOF
- 404 FENDERS
- 405 QUARTER PANELS
- 406 FLOORPAN
- 407 BACK PANEL
- 408 GRILLE/BUMPERS
- 409 EXTERIOR TRIM

410 DOORS
- 411 LEFT/RIGHTDOORS
- 412 HOOD
- 413 TRUNK LID/LIFTBACK/TAILGATE
- 414 WINDOW REGULATORS/HANDLES
- 415 LOCKS/LATCHES/HANDLES
- 416 POWER WINDOW MOTOR
- 417 REMOTE LOCK/UNLOCK SYSTEM

420 SUNROOF
- 421 SUNROOF PANEL
- 422 SUNROOF HEADLINER
- 423 SUNROOF MOTOR/DRIVE
- 424 MOONROOF PANEL
- 425 MOONROOF HEADLINER
- 426 MOONROOF ACTUATOR

430 SEATS/SEAT BELTS
- 431 SEAT TRIM
- 432 SEAT ADJUSTERS
- 433 SEAT FRAME
- 435 LAP BELTS
- 436 SHOULDER BELT OR COMBINATION
- 438 AIR BAG

440 INTERIOR TRIM
- 441 DASHBOARD
- 442 HEADLINER
- 443 CARPET
- 444 CONSOLE
- 445 GLOVE BOX
- 446 DOOR TRIM
- 447 QUARTER TRIM
- 448 OTHER FIXED TRIM

460 GLASS
- 461 WINDSHIELD
- 462 DOOR GLASS
- 463 SIDE GLASS
- 464 BACK GLASS
- 466 QUARTER GLASS
- 467 WIND WING
- 468 OTHERS

470 PAINT

480 RUST
- 481 UNDERCARRIAGE
- 482 STRUCTURAL PANEL
- 483 APPEARANCE PANEL

500 BODYELECTRICAL

510 HEAT/VENT/AIR CONDITIONER
- 511 HEATER CORE
- 512 HOSES/WATER VALVE
- 513 BLOWER MOTOR/FAN
- 514 COMPRESSOR
- 515 CONDENSER/EVAPORATOR/ RECEIVER
- 516 OTHER REFRIGERANT COMPONENTS
- 518 ELECTRONIC CONTROLS
- 519 REAR DEFOGGER

520 AUDIO
- 521 RECEIVER
- 522 TAPE DECK
- 523 DISC PLAYER
- 524 EQUALIZER
- 525 SPEAKERS
- 526 ANTENNA

530 WIPER/WASHER
- 531 WINDSHIELD WIPER MOTOR
- 532 WINDSHIELD WIPER ARM/ BLADE
- 533 WINDSHIELD WASHER

540 LIGHTING/SIGNALING
- 541 HEADLAMPS
- 542 PARKING LAMPS
- 543 INTERIOR LIGHT
- 544 INSTRUMENTLIGHTING
- 545 BRAKE LIGHTS
- 546 FOG/DRIVING LIGHTS
- 547 HORN
- 548 HEADLAMPHORN (PASSING LIGHTS)
- 549 TURN SIGNALS

550 GAUGES
- 551 SPEEDOMETER
- 552 TACHOMETER
- 553 FUEL
- 554 TEMPERATURE
- 555 OILPRESSURE
- 556 VOLT/AMMETER
- 557 OILLEVELGAUGE
- 558 OTHER INDICATORS

560 ACCESSORIES
- 561 CRUISE CONTROL
- 562 TRIP COMPUTER
- 563 CLOCK
- 564 THEFT DETERRENT SYSTEM
- 565 HEATED OR REMOTE REAR VIEW MIRROR
- 566 CELLULAR TELEPHONE

570 WIRING
- 571 ENGINE HARNESS
- 572 COWL HARNESS
- 573 INSTRUMENT HARNESS
- 574 FRONT BODY HARNESS
- 575 REAR BODY HARNESS

600 PIO

610 EXTERIOR PIO ACC
- 613 STRIPES
- 614 SHADOW
- 616 WHEEL COVERS/TRIM
- 617 DECK RACK
- 618 CAR COVERS

620 INTERIOR PIO ACC
- 624 FLOOR MATS

ETAS PROBLEM CODES

First letter of Problem Code describes the symptom:

A = APPEARANCE, FIT FINISH, ALIGNMENT
B = BROKEN, SPLIT, CRACKED, TORN, DEFORMED
C = COST, CONSUMPTION, ECONOMY
D = DRIVEABILITY, HESITATION, STUMBLE, ROUGH IDLE
F = SEIZED, FROZEN, BINDING, STICKING
G = GENERAL COMMENT
H = HARD STARTING
J = LOOSENING, FALLING OFF
K = INOPERATIVE
L = LEAK
N = NOISE, SOUND, KNOCKING
P = PERFORMANCE, EFFICIENCY
Q = ASSEMBLY QUALITY, MISSING PART
R = REPAIR, OPERATION, PROCEDURE
S = SMELL, ODOR, SMOKE
T = MULTIPLE CONDITIONS
U = UNKNOWN, OTHER, NOT CLASSIFIED
V = VIBRATION
W = WIRING, INACCURATE

CODES HIGHLIGHTED IN BURGUNDYARE RECOMMENDED FOR SEARCHES

TAS Component & Problem Codes

100 Engine
101 Block
102 Head/Gasket
103 Timing Cover/Pulley
104 Oil Pan/Dipstick/Filler Cap
105 Valve Cover
106 Crankshaft/Balance Shaft
107 Pistons/Rods
108 Bearings/Seals
109 Sads Shaft

110 Starting/Charging
111 Battery/Cables
112 Starter
113 Ignition Switch/Key Cylinder
114 Neutral Safety Switch
115 Alternator
116 Voltage Regulator
117 Other Charging Parts
118 Drive Belt

120 Ignition/Glow Plugs
121 Distributor/Coil/Igniter
122 Spark Plug Wires
123 Spark Plug
124 Primary Wiring
125 Cap/Rotor
126 Glow System (Diesel)

130 Fuel System
131 Fuel Tank/Gas Cap/Sending Unit
132 Fuel Pump/Pressure Regulator
133 Fuel Lines
134 Fuel Filter
135 Fuel Injectors
136 Diesel Injection Pump
137 Diesel Injectors
138 Cold Start Switch/Injectors

140 Intake/Induction
141 Intake Manifold
142 Carburetor
143 Air Cleaner/Filter/Housing
144 Turbo/Supercharger
145 Throttle Body/Gas Pedal
146 Intercooler/Hoses
147 Throttle Linkage
148 Ducts/Hoses

150 Exhaust
151 Exhaust Manifold
152 Exhaust Pipes
153 Muffler/Resonator
154 Tail Pipe
155 Heat Shield
156 Bolts/Brackets
157 Joints/Gaskets

160 Emissions
161 CCO (Catalytic Converter)
162 EGR Valve
163 PCV Valve
164 EVAP System/Charcoal Canister
165 Air Injection/Suction
166 Vacuum Lines/Valves/Hoses
169 Other Emissions Components

170 Valve Train
171 Camshaft
172 Timing Belt/Chain/Gear
173 Intake Valves
174 Exhaust Valves
175 Lifters/Lash Adjusters
176 Rocker Arms/Shafts

180 Lubrication/Cooling
181 Oil Pump
182 Oil Filter
183 Fan Belt
184 Thermostat
185 Water Pump
186 Hoses
187 Radiator/Cap
188 Cooling Fan
189 Coolant Reservoir/Overflow Tube

190 Engine Electronic Controls
191 Engine ECU/ECM
192 Air Flow Meter/MAP Sensor
193 Oxygen Sensor/Relays
194 Other Engine Sensors
195 Diagnostic Equipment/Codes
196 Oil Sending Unit
197 Air/Coolant Temp. Sending Unit
198 Knock Sensor

210 Transmission (Automatic)
211 Case/Pan/Gaskets/Dipstick
212 Torque Converter/Flex Plate
213 Oil Pump
214 Valve Body
215 Planetary Gear Sets
216 Input/Output Shafts/Counter Gears
217 Friction Parts
218 Shift Lever/Linkage
219 Bearings/Seals

220 Transmission (Manual)
221 Clutch/Pressure Plate
222 Case/Pan/Gaskets
223 Gear Sets
224 Input/Output/Counter Shafts
225 Synchronizers/Hubs
226 Shift Lever/Linkage
227 Bearings/Seals
228 Flywheel/Flex Plate
229 Clutch Hydraulic System/Lines

230 Transfer Case
231 Case/Pan/Gaskets
232 Gear Sets
233 Input/Output/Counter Shafts
234 Shift Lever/Linkage
235 Bearings/Seals

240 Driveline
241 Driveshaft
242 Differential/Housing/Locking Sys
243 Axles
244 Bearings/Seals/Gaskets
245 Propeller Shaft
246 CV Joints/Boots
247 Double Cardan Joint
265 Locking Hubs/A.D.D.

270 Electronic Controls
271 Transmission ECU (ECTi)
272 Transmission Solenoids
273 Other Sensors/Relays/Switches
275 Temperature Sensor
276 Speed Sensor
277 Idle Speed Control Valve (ISCV)

310 Steering
311 Steering Wheel/Column/Lock
312 Steering Rack/Gear Box
313 Linkage/Tie Rods/Steering Stops
314 Power Steering Pump/Lines
315 Power Steering Belt
316 Wheel Alignment
317 Electronic Steering Controls

320 Front Suspension
321 Springs/Torsion Bar
322 Shocks/Struts
323 Control Arms/Links
324 Bushings
325 Stabilizer Bar
340 Electronic Suspension Controls

330 Rear Suspension
331 Springs
332 Shocks/Struts
333 Control Arms/Links
334 Bushings
335 Stabilizer Bar

350 Brake System
351 Brake Pedal/Linkage
352 Front Disc Brake Assembly
353 Rear Disc Brake Assembly
354 Rear Drum Brake Assembly
355 Parking Brake/Cable
356 Master Cylinder/Lines/L.S.P.V.
357 Power Booster
358 ABS (Anti-Lock Brake System)
359 Traction Control System

360 Wheels and Tires (O.E.M.)
361 Alloy Wheels
362 Steel Road Wheels
363 Tires
364 Wheel Covers/Caps/Trim
365 Spare Tire/Jack Assembly
366 Wheel Locks/Weights/Lug Nuts

370 Spindles/Bearings/Hubs
371 Spindles/Stub Axle
372 Wheel Bearings
373 Front Hubs
374 Rear Hubs

400 Body
401 Frame/Crossmember/Skid Plate
402 Cowl Panel/Firewall
403 Roof
404 Front Fenders
405 Rear Quarter Panels/Fuel Door
406 Floor Pan/Rocker Panel
407 Back Panel
408 Grille/Bumpers
409 Exterior Trim/Moldings

410 Doors and Components
411 Left/Right Doors
412 Hood/Release/Support Arm/Struts
413 Truck Lid/Compartment/Liftback
414 Window Regulators/Handles
415 Door Handles/Locks (incl. Power)
416 Power Windows/Motor/Switch
417 Trunk & Fuel Door Release Levers
418 Keys
419 Door Seals/Weather Strips

420 Sunroof/Moonroof (O.E.M.)
421 Panel/Glass
422 Headliner/Fabric
423 Motor/Cables
427 Sport Roof/T-Tops
428 Seals/Weather Strips
429 Control Switch

430 Seats/Seatbelts
431 Seat Trim/Upholstery
432 Seat Adjusters/Lumbar Support
433 Seat Frame/Seat Track
434 Headrest
435 Lap Belts/Buckles/Receptors
436 Three Point Belts
437 Automatic Shoulder Belts/System
438 SRS/Airbag/Sensors
439 Child Safety Seats/Restraints

440 Interior Trim
441 Dashboard/Instrument Panel
442 Headliner
443 Carpet
444 Console/Cupholder/Lighter/Ashtray
445 Glovebox/Security Lock
446 Door Trim/Armrest
447 Quarter Trim
448 Other Fixed Trim/Trunk Trim
449 Sun Visor/Vanity Mirror

450 Truck Bed
451 Bed Floor
452 Outer Panels
453 Inner Panels
454 Tailgate/Latch
455 Bedliner
456 Tie Down Hooks

460 Glass
461 Windshield
462 Door Glass/Windows
463 Fixed Side Glass
464 Rear Windshield
465 Lift Back Glass
466 Quarter Glass
467 Wind Wing/Vent Window
468 Glass Seals/Weather Strips
469 Rear View & Outside Mirrors

470 Paint
471 Hood
472 Roof
473 Trunk
474 Front Fenders
475 Rear Quarter Panels
476 Doors
477 Spoiler
478 Bumpers

480 Rust
481 Undercarriage Rust
482 Structural/Panel Rust
483 Appearance/Surface Rust
484 Chrome/Bumper Rust
485 Body Moldings/Trim Rust

490 Convertible Top
491 Fabric Top
492 Supports/Bows
493 Motor/Electrical Parts
494 Pump/Hydraulic Parts
495 Sensors/Relays
496 Boot
497 Rear Window

510 Heat/Air Conditioner (O.E.M.)
507 Expansion Valve
508 Vents/Outlets
509 Airflow & Temperature Controls
511 Heater/Core
512 Hoses/Water Valve
513 Blower Motor/Fan
514 Compressor/Clutch/Belt
515 Condenser/Evap/Receiver/Dryer
516 Refrigerator Components (Van)
518 Elec. Controls/Sensors/Relays
519 Defroster/Defogger

520 Audio (O.E.M.)
521 Radio/Receiver/Amplifier
522 Tape Player
523 Disc Player/Changer
524 Equalizer
525 Speakers
526 Antenna
527 Audio Wiring
528 Anti-Theft System
529 Control Knobs/Buttons

530 Wiper/Washer
531 Wiper Motor
532 Wiper Arm/Blade
533 Washer/Motor/Bottle/Nozzle
534 Rear Wiper Motor
535 Rear Wiper Arm/Blade
536 Rear Washer/Motor/Bottle/Nozzle

540 Lights/Signals
541 Headlights
542 Parking/Reverse Lights
543 Dome/Map/Interior Lights
544 Dash/Instrument Lights
545 Brake Lights
546 Fog/Driving Lights
547 Horn
548 High Beams
549 Turn Signals/Hazards

550 Gauges/Warning Lights
551 Speedometer/Odometer/Cables
552 Tachometer
553 Fuel Level Indicator
554 Temp. Gauge/Warning Light
555 Oil Pressure Gauge/Light
556 Volt/Ammeter/Battery Light
557 Oil Level Gauge/Light
558 Other Indicators/Warning Lights
559 Tripmeter

560 Accessories (O.E.M.)
561 Cruise Control
562 Electronic Trip Computer
563 Clock
564 Theft Deterrent System/Remote
565 Heated Rearview Mirror
566 Cellular Phones
567 Tilt/Telescopic/Mirror

570 Wiring Harness
571 Engine Harness
572 Cowl Harness
573 Instrument Harness
574 Front Body Harness
575 Rear Body Harness
576 Fuses/Fusebox/Circuit Breaker
577 Switches/Relays

600 Accessories
601 Gold Package
602 Wind Deflector
603 Mudguards
604 Trailer Hitch/Towing Equipment
605 Tonneau Cover
606 Sliding Rear Window
607 Brush Guard
608 Running Boards
611 Truck Bumpers
612 Roof Racks
613 Striping/Graphics
614 Shadow/Window Tint
615 Outside Truck Mirrors
616 Wheels/Rims/Covers/Caps/Locks
617 Deck Rack (Trunk Mounted)
618 Car Cover
619 Front-End Mask
621 Clock/Compass/Navigational Equip
622 Alarm System/Remote
623 Audio System/Equipment
624 Floor Mats
625 Air Conditioner
626 Seat Covers/Cushions
627 Spoiler
628 Center Console/Armrest
629 Wood Grain Dash
630 Cruise Control
631 Cellular Phone/Antenna
632 Sunroof/Moonroof
700 Diagnostic

Miscellaneous
920 Periodic Service/General Maint.
960 Incidentals
961 Towing
962 Rental Vehicle
999 Trash

TEAMWORK IN QUALITY NEW VEHICLE DELIVERY CHECK SHEET

LS 400

Dealer Code _ _ _ – _ _ _ _ **VIN** _ _ _ _ _ _ _ _ _ _ _ _ _ _ _ _ _

Before Starting PDS	OK	Adjust/ Add	Repair/ Replace
Wash vehicle thoroughly	☐		
Perform water leak test	☐		
Install short pin	☐		
Install shift lock override button	☐		

A. Vehicle Exterior

Inspect paint finish for blemishes, scratches, etc.	☐	☐	☐
Inspect exterior body parts for installation damage, etc.	☐	☐	☐
Check trunk lid operation	☐	☐	☐
Check door lock system and illuminated entry system	☐	☐	☐
Check wireless door lock remote control system	☐	☐	☐
Check theft deterrent system	☐	☐	☐
Check illumination of exterior lights	☐	☐	☐

B. Vehicle Interior

Inspect interior parts for dirt, damage, and proper fit and alignment	☐	☐	☐
Inspect seat belts and operation	☐	☐	☐
Check child protector locks	☐	☐	☐
Check power seats, headrests, and driving position memory operations	☐	☐	☐
Check power windows and door locks	☐	☐	☐
Check trunk and fuel lid openers	☐	☐	☐
Check engine immoblizer lights and operation	☐		☐
Check tilt and telescopic steering wheel	☐	☐	☐
Check turn signal, headlight high beam, and emergency flasher indicator lights and horn	☐	☐	☐
Check wipers and washers	☐	☐	☐
Check warning lights, gauges, meters, airbag and ABS system lights	☐	☐	☐
Check Multi-Informational Display	☐		☐
Check Navigation System*	☐		☐
Check air conditioning, heater and defroster/defogger	☐	☐	☐
Check seat heaters*	☐	☐	☐
Check audio system	☐	☐	☐
Check clock and outside temperature display	☐	☐	☐
Check cigarette lighters (front/rear), ashtrays (front/rear) and power outlet	☐	☐	☐
Check cup holders (front/rear)	☐	☐	☐
Check interior, foot, map, vanity, door courtesy and glove compartment lights	☐	☐	☐
Check moonroof operation (slide and tilt)*	☐	☐	☐
Check outside/inside rear view mirrors	☐	☐	☐
Check garage door opener	☐		☐
Check first aid kit	☐		☐
Check on-board diagnostic system operation	☐	☐	☐

C. Luggage Compartment

Check spare tire pressure	☐	☐	
Inspect spare tire and cover, jack and jack tools	☐	☐	
Check tool box	☐	☐	☐
Check operation of the manual fuel lid release lever	☐	☐	
Inspect trim appearance and trunk mat	☐	☐	☐

D. Under Hood

Check engine hood lock release lever	☐	☐	☐
Check the engine oil level (engine not running)	☐	☐	☐
Check brake fluid level	☐	☐	☐

D. Under Hood (Cont'd)

	OK	Adjust/ Add	Repair/ Replace
Check power steering fluid	☐	☐	☐
Check engine coolant fluid level	☐	☐	☐
Check washer fluid level	☐	☐	☐
Check battery terminal tightness and charge	☐	☐	☐
Inspect wiring and hose condition	☐	☐	☐
Check engine operation (cold)	☐	☐	☐
Check engine operation (during/after warm-up)	☐	☐	☐
Check automatic transmission fluid level	☐	☐	
Check engine fans	☐	☐	☐
Inspect for fluid leaks	☐	☐	☐
Check headlight aim	☐	☐	☐

E. Under Vehicle (On Hoist)

Check wheel lug nut torque	☐	☐	☐
Install the wheel center caps	☐	☐	
Inspect tire for defects of damage and adjust air pressure	☐	☐	☐
Remove disc brake anti-rust covers	☐	☐	☐
Inspect differential lubricant level	☐	☐	☐
Inspect chassis for leakage or damage	☐	☐	☐
Check and tighten all bolts on chassis	☐	☐	☐
Inspect exhaust system	☐	☐	☐
Install rubber body plugs at torque box locations	☐	☐	
Check rear marine tie-down plugs installed	☐	☐	

F. Road Test (Vehicle Operation)

Check engine idle speed	☐	☐	☐
Check engine operation while driving	☐	☐	☐
Check brake and parking brake	☐	☐	☐
Check brake pedal height, freeplay and reserve stroke	☐	☐	☐
Check transmission operation	☐	☐	☐
Initialize Navigation System*	☐	☐	☐
Check Vehicle Height*, VSC and ECT switch operation and indicator lights	☐	☐	☐
Check cruise control operation	☐	☐	☐
Check steering operation and off-center	☐	☐	☐
Inspect for any abnormal noise or vibration	☐	☐	☐
Inspect for squeaks and rattles	☐	☐	☐

G. Final Inspection

Set controls for customer comfort	☐	
Remove interior protective covers	☐	
Sign the Teamwork in Quality Certificate	☐	

H. Two Hours Before Delivery

Place glovebox portfolio in glove compartment	☐	☐
Fill up fuel tank	☐	
Wash and clean vehicle	☐	

*Optional Equipment

Technician Signature

Inspection Certificate

Lexus automobiles undergo the most demanding inspection process in the automotive industry. Hundreds of inspections are conducted at the factory, our U.S. port of entry inspection centers, and your authorized Lexus Dealer. The following checklist ensures that this vehicle has passed all required inspections and is delivered to you in excellent condition.

Vehicle Identification Number_____

Factory

We hereby certify that this vehicle was completely inspected and meets our quality standards.

合格 PASSED

Toyota Motor Corporation

Port of Entry Inspection Center

We hereby certify that this vehicle was completely inspected and meets our quality standards

- ☐ Vehicle Exterior
- ☐ Vehicle Interior
- ☐ Final Quality Inspection
- ☐ Under Hood
- ☐ Road Test

Name (Port Technician)

Dealership: _____

We hereby certify that this vehicle was completely inspected and meets our quality standards.

Teamwork in Quality Service Inspection

- ☐ Inspected Vehicle Exterior and Functional Items
- ☐ Inspected Vehicle Interior and Functional Items
- ☐ Inspected Under Hood, Fluid Levels, and Functional Items
- ☐ Inspected Luggage Compartment Items
- ☐ Road Test and Confirm all Operational Items
- ☐ Final Inspection and Cleaning

Diagnostic Specialist Name

Service Manager Name

Teamwork in Quality Sales Delivery Checklist

- ☐ Complete Final Paperwork
- ☐ Deliver Vehicle to Customer:
  - •Explain all features and controls
  - •Explain warranty and maintenance schedules
  - •Explain owner's portfolio contents
  - •Explain unique Lexus key system
  - •Drive vehicle with customer
  - •Fill fuel tank
- ☐ Review all Customer Care Provisions
- ☐ Introduce Customer to Service/Parts Manager and Service Consultant
- ☐ Schedule 30-Day Vehicle Inspection

Sales Consultant Name

ROADSIDE ASSISTANCE 800-25-LEXUS

LEXUS

00242-40001
99-LSO-107

Section 0

Introduction to Lexus Air Conditioning and Automatic Temperature Control

Course L752, *Lexus Air Conditioning and Automatic Temperature Control* is a technical training course that covers basic through advanced concepts of mobile air-conditioning systems, and basic and automatic temperature-control systems used on Lexus vehicles. This course will familiarize you with the theory of operation, troubleshooting techniques and repair procedures necessary to diagnose and repair Lexus air-conditioning systems.

The *Technician Handbook* presents information in a logical order for use during the course and for reference in the shop.

A prerequisite to this course is successful completion of Course L622 and L652 **Electrical Circuit Diagnosis.** You should have completed the Self-Study Prework Modules before attending this course.

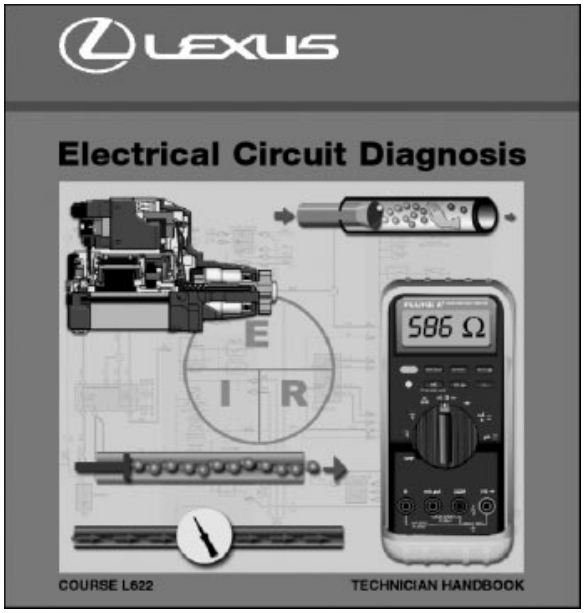

Course L752 uses this *Technician Handbook*, other Lexus reference manuals, sample components, integrated worksheets and hands-on lab activities with vehicles to broaden the air conditioning repair and diagnosis skills of the technician.

Course Objectives

After completing this course, you should be able to meet the following objectives:

- Effectively diagnose and repair Lexus air-conditioning systems using approved resources, tools and procedures
- Effectively operate Lexus-specified recovery/recycling equipment and recharge vehicle A/C systems
- Demonstrate a working understanding of the principles of the automatic air-conditioning system
- Successfully diagnose and repair Lexus Automatic A/C systems

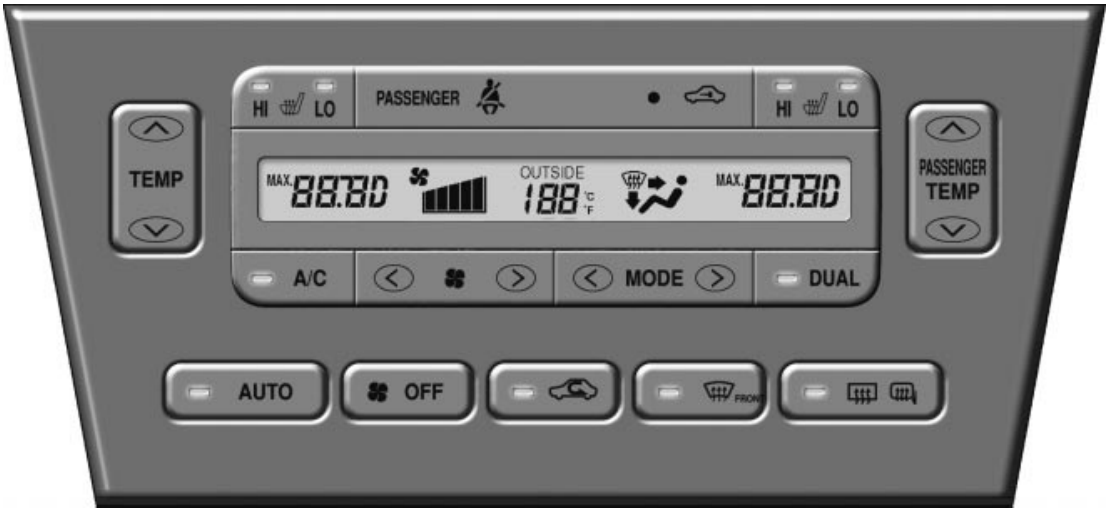

NOTE

Federal, state or local regulations may require technicians to receive additional training or certification prior to working on the refrigerant circuits of mobile air-conditioning systems. Consult the appropriate city and state regulations for handling refrigerants and for additional information.

Information contained in these course materials is subject to change. Reference should be made to the *Technical Information System* (TIS) and to current Lexus *Vehicle Repair Manuals, Electrical Wiring Diagrams* and *Technical Information Service Bulletins* (TSIB) for exact specifications and procedures.

Section 1

Preparation

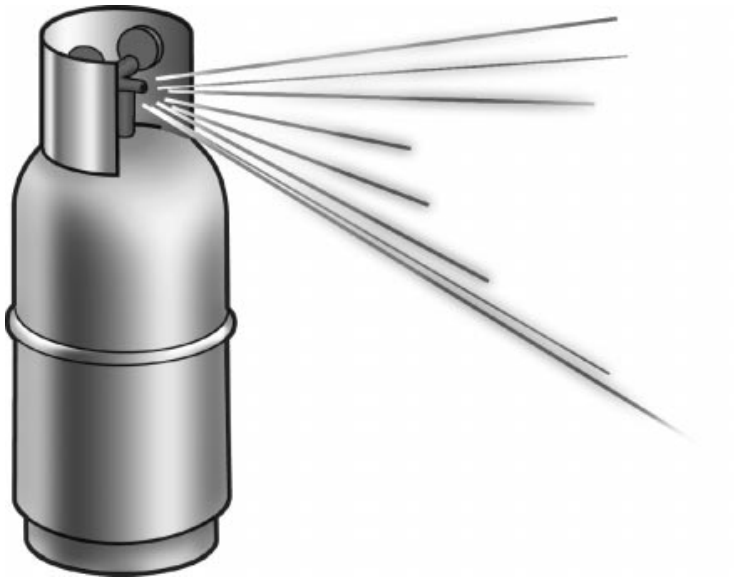

Lesson Objectives

1. Demonstrate safe practices for working with compressed gases.
2. Demonstrate safe practices for working with electricity and Supplemental Restraint Systems (SRS).
3. Identify tools and equipment necessary to diagnose and repair the air-conditioning system.

Safety Practices

Throughout this course and during normal A/C service procedures, there is a possibility for dangerous contact with moving parts, pressurized gases, high current electrical circuits and accidental deployment of the supplemental restraint system ("airbags"). Consider the potential hazards involved and use the following safe working practices.

Compressed Gases

Pressurized gases are present in vehicle air-conditioning systems, recovery/ recycling equipment and even manifold test gauges. All pressurized gases exhibit two characteristics that can be hazardous:

1. When heated, internal pressure increases (rises).
2. When pressure is suddenly released, the temperature of the gas decreases (drops).

These properties of a compressed gas can be hazardous in two ways:

1. If heat is applied to a pressurized system (bright sunlight, lack of ventilation, use of steam cleaner or welder, etc.), system pressure can quickly increase beyond a safe limit. This could result in an explosion with the danger of injury from flying metal fragments.
2. If refrigerant gas rapidly escapes, there is a danger of frostbite. Frostbite is a serious injury that results in tissue damage caused by localized freezing and requires medical attention. Since the eyes are made of delicate tissue, they can be damaged by direct contact with even a small amount of escaping refrigerant. Always wear safety goggles when working with refrigerant.

Risk of Frostbite

Warning: Refrigerant is a compressed gas and can burn skin or eyes.

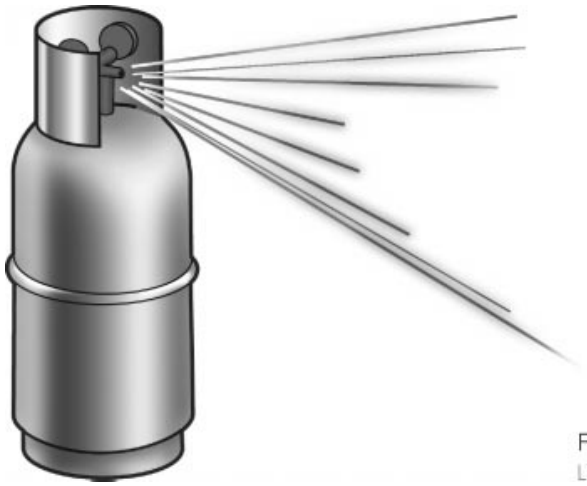

Fig. 1-1
L752f101

Electrical Circuits

The low voltages used in vehicles generally pose little risk of electrical shock. However, many repairs require using equipment powered by 120 volts with high current. Accidental short circuits can damage components or test equipment. Touching a wire that is shorted to ground can burn you. Observe the following to reduce the risk of personal injury:

1. Verify all 120-volt equipment line cords are in good condition and properly grounded.
2. Before making resistance measurements with an ohmmeter, first confirm the circuit source voltage is OFF by testing the circuit with a meter set to measure voltage.
3. When bypassing components to test a circuit, use a fused jumper wire as shown to protect against accidental short circuits.

SRS/Airbag Systems

The **Supplemental Restraint Systems (SRS)** are designed to deploy only in response to a significant frontal or side impact. To prevent accidental deployment, disconnect the ground (negative) cable from the battery and wait for up to 60 seconds before performing any repairs which involve disconnecting any SRS wiring. SRS-related circuits are identified by bright yellow wire harnesses and connectors.

Before disconnecting the battery cable, make a note of the radio presets, Auto A/C panel settings and the display of any system fault codes.

Precautions for Airbags

- Read all precautions in the Repair Manual prior to work.

Fig. 1-2
L752f102

Tools and Equipment

Accurate diagnosis and efficient repair depend on using the correct tools and information. In addition to *Vehicle Repair Manuals, Electrical Wiring Diagrams, Technical Service Information Bulletins* and a standard technician's tool set, the following Special Service Tools and other equipment may be needed:

Recommended Tools (or equivalent)	**Part Number**
A/C Recovery/Charge Station	
Refrigerant Identifier	
Refrigerant Leak Detector	
Thermometer Dial Type — 0-220 degrees F	
DVOM Meter	
Dial Indicator with Magnetic Base	
Cooling System Pressure Tester	
Condenser Fin Straightener	
R-134a Valve Core Removers	
Magnetic Clutch Remover (SST)	07112-66040
Magnetic Clutch Stopper (SST)	07112-76060
A/C Quick Joint Puller #1 Suction Tube (SST)	09870-00015
A/C Quick Joint Puller #2 Liquid Tube (SST)	09870-00025
Toyota/Lexus Diagnostic Tester (SST Hand Held Tester/SCAN Tool)	01001270
Belt Tension Gauge (SST) 09216-00021	
Eye Protection Goggles/Safety Glasses with Side Panels	
Rubbers gloves	

Notes

Section 2

The A/C System

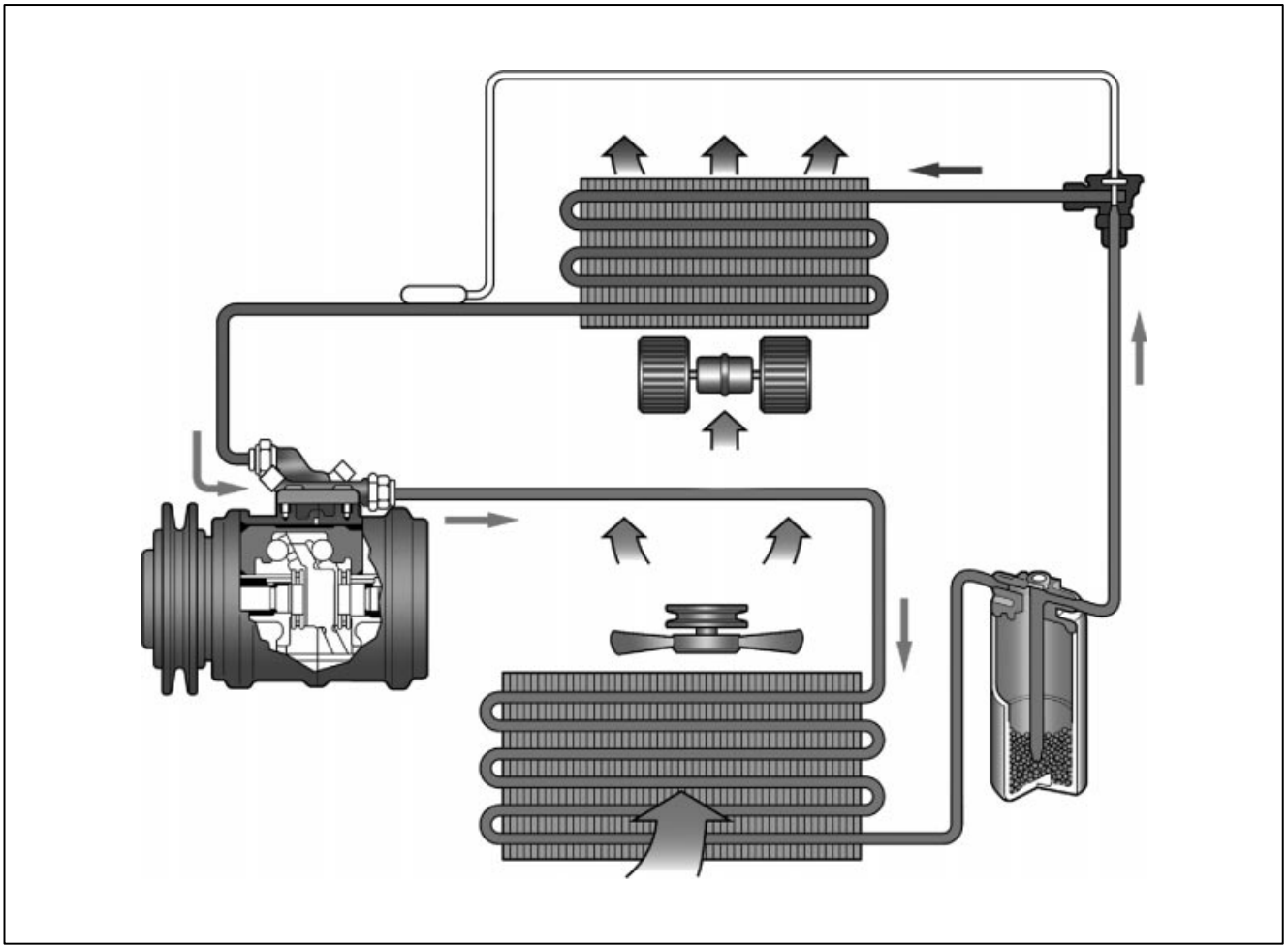

Lesson Objectives

1. Identify and demonstrate the function of the basic refrigerant circuit.
2. Identify the low- and high-pressure sides of the refrigeration circuit.
3. Identify the major components of the A/C refrigeration circuit.

The Refrigerant Circuit

The basic A/C system contains components to push refrigerant through a closed system in order to extract heat out of the vehicle interior and transfer that heat to the outside air. This cycle continues constantly until the vehicle's interior reaches a set temperature. Inside the A/C system, the refrigerant changes from a liquid to a gas and then back to a liquid. As we shall see, this "phase change" is what helps remove heat from the air circulating inside the vehicle.

Expansion and Evaporation

If a pressurized liquid is released into an area of lower pressure, it will evaporate into a gas and absorb heat from that area. This is the principle that causes the spray from an aerosol can to feel cold to your skin. Likewise, a liquid that changes from liquid to vapor at a low temperature (e.g. alcohol) will feel cool on the skin as it evaporates (phase change). This is the situation you feel when you get out of a swimming pool or shower. The evaporating water on your skin absorbs heat from your body even though the air temperature is quite high.

The device that regulates pressure in an A/C system is the **expansion valve.** The area where heat transfer takes place is the **evaporator** (heat exchanger).

Compression and Condensation

After the gaseous refrigerant absorbs heat, the system pressurizes it to change it back into a liquid. As this happens, the gas gives off much of the heat that was absorbed. This is what the **compressor** and **condenser** do in the A/C system. In order for the gas to actually give up heat while in the **condenser** (heat exchanger), it must be hotter than the air around it. The compressor makes this possible by increasing the line pressure, and therefore, the temperature of the refrigerant gas.

Refrigerant Properties

Automotive air conditioning has been widely available since the 1940s. The refrigerant CFC-12 or R-12 (also known as Freon®) was used for many years due to its relative safety in contact with humans and its low boiling point of –21° F. In other words, the CFC-12 refrigerant (HFC-134a –17°), and most liquids used as refrigerants, change from a liquid to a gas at a very low temperature.

For the last decade, another refrigerant, HFC-134a (R-134a), has been developed for use in automobiles due to its less negative impact on the environment. Most new vehicles manufactured today use HFC-134a. Federal laws regulate the use, recycling and recharging of CFC-12 and HFC-134a refrigerant.

Basic A/C System

A basic A/C system has a **high-pressure side** and a **low-pressure side.** The high-pressure side (shown in red below) includes the **compressor, condenser** and the **receiver/drier.** The low-pressure side of the system (shown in blue below) includes the **expansion valve** and the **evaporator.**

Vehicle A/C System

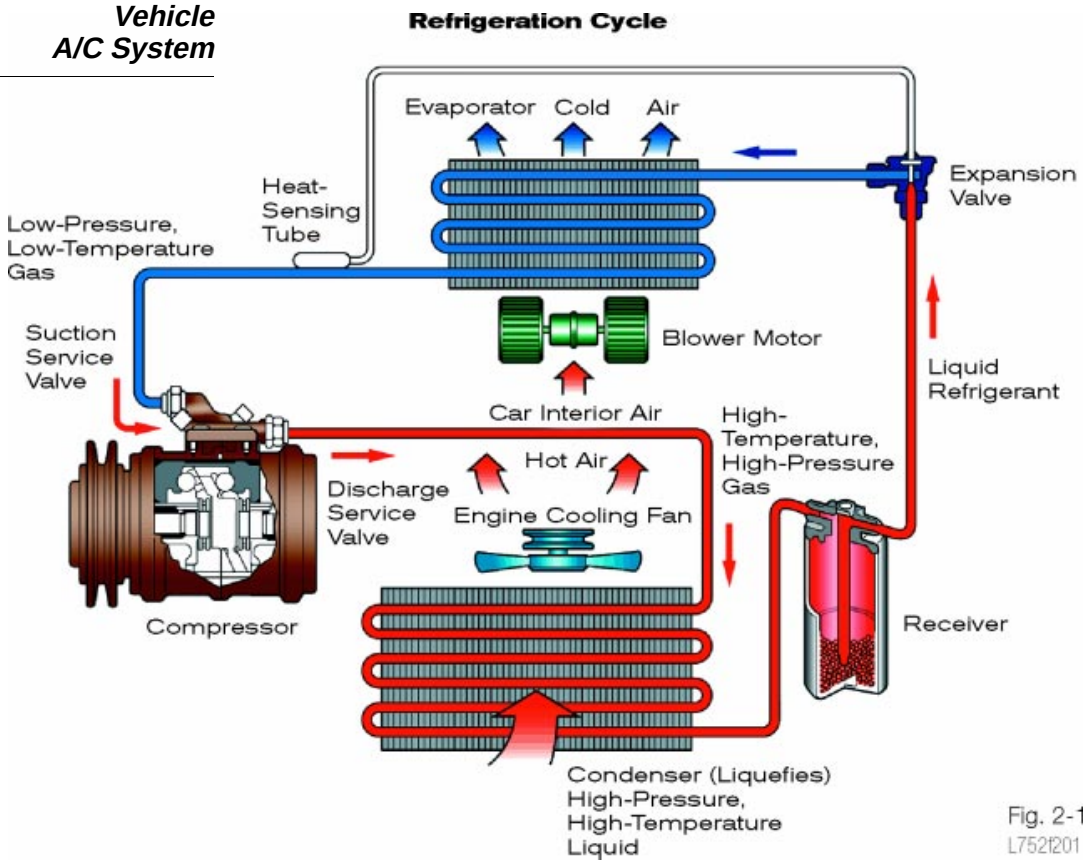

Fig. 2-1
L752f201

Here is the basic flow through the system. Beginning with the low side, the **expansion valve** controls the flow and pressure of liquid refrigerant into the **evaporator** (heat exchanger). As the lower pressure liquid refrigerant turns into a gas inside the evaporator, a tremendous amount of heat is absorbed from the warm passenger compartment air circulating over and around the evaporator. The A/C blower motor helps circulate air throughout the vehicle's interior. The still gaseous, but very hot refrigerant then flows into the **compressor.**

The **compressor** pressurizes the gaseous refrigerant. The high-pressure refrigerant then flows to the **condenser** (heat exchanger) where the absorbed heat in the refrigerant transfers to the air outside the vehicle. A "condenser" fan helps this heat transfer process. As heat is removed from the refrigerant, it changes from a gas back to a liquid. The liquid refrigerant is then ready for another cycle through the system. The **receiver-drier** acts as a filter and storage tank for refrigerant before entering the **expansion valve.**

System Pressure

All automotive A/C systems are now based on HFC-134a refrigerant. Because of this, all systems have similar characteristics.

Even though current vehicles use less refrigerant or a smaller volume of refrigerant, **system pressure** will be about the same under similar conditions. Therefore, the pressures within a working system will provide the technician with an accurate measure of the following:

- Amount of refrigerant in the system
- Operation of the compressor
- Degree of pressure regulation provided by the expansion valve
- Efficiency of the condenser to dissipate heat (dirt or bugs reduce efficiency)

For these reasons, the system pressures (high and low) will provide useful diagnostic information.

Review

The A/C system uses the properties of refrigerant to remove heat from the passenger interior.

The A/C system contains two pressure zones: **low** and **high** pressure.

The low pressure portion of the system contains the **expansion valve** and the **evaporator.**

The **high pressure** portion of the system contains a **compressor, condenser and a receiver-drier.**

There are two heat exchangers in the system: A **condenser** (gets rid of heat) and an **evaporator** (absorbs heat).

Electric fans assist heat transfer: An A/C blower fan for the **evaporator** and a fan for the **condenser.**

The entire system is connected by high and low pressure hoses (hard and flexible lines).

Section 3

A/C System Components

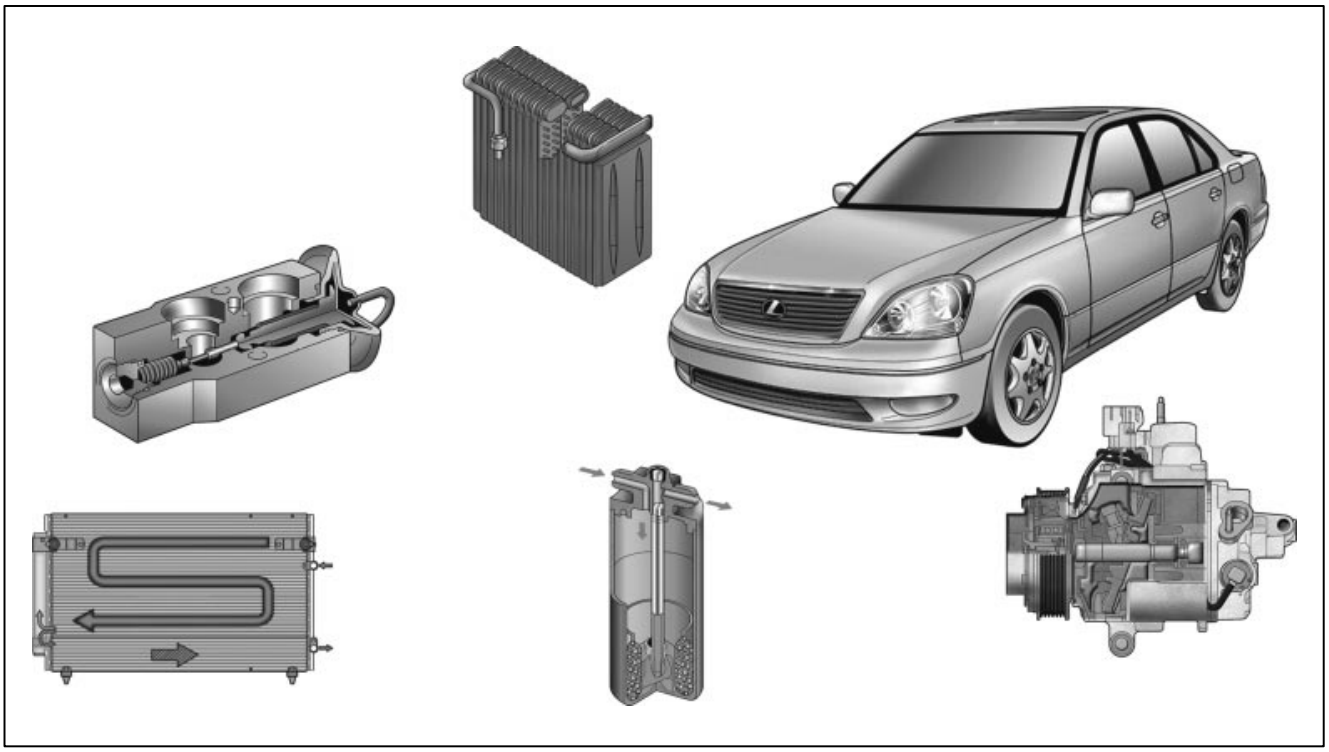

Lesson Objectives

1. Identify A/C System Components, and their function in the refrigeration circuit.
2. Identify and verify the changes in pressures within the A/C refrigeration circuit during operation.
3. Identify circuit protection devices and their role in the A/C system.
4. Locate and identify front and rear A/C System Components on a vehicle and vehicle simulator.

In the previous sections, we referred to the functions of the A/C components. Here's how each one works in closer detail.

A/C System Components

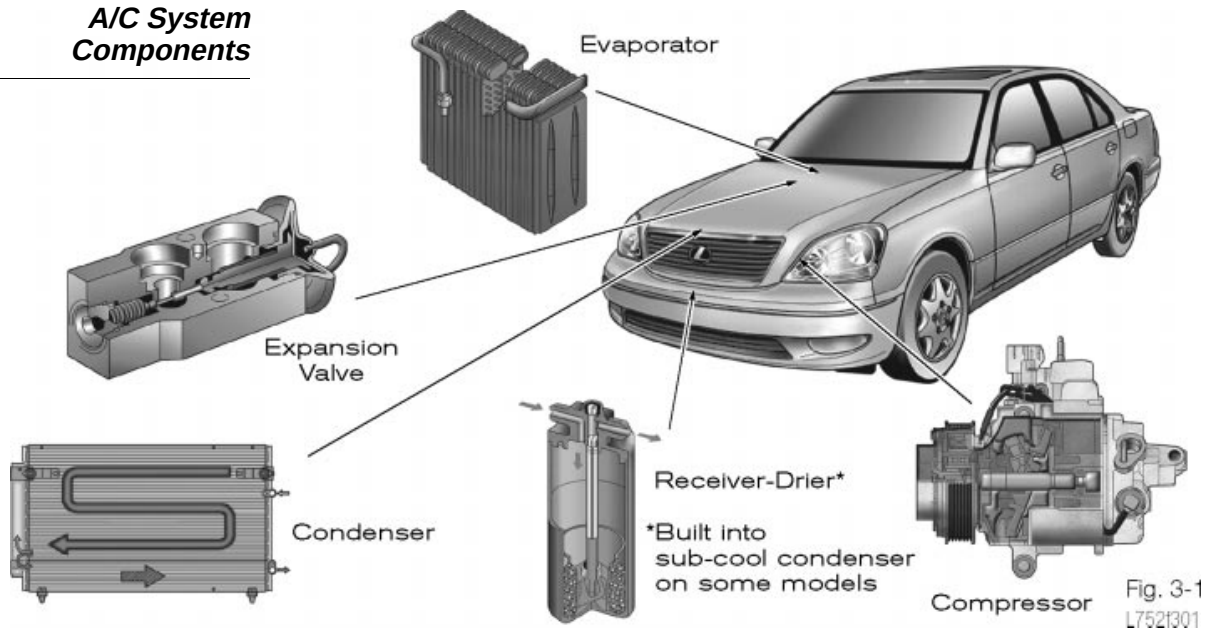

Fig. 3-1
L752f301

Expansion Valve

The expansion valve receives liquid refrigerant from the high-pressure components (compressor and receiver/drier). In order for the system to develop **pressure,** the flow of refrigerant must be met with a restriction. The **expansion valve** provides the needed restriction in the system. It creates the difference between the high-pressure side of the system and the low-pressure side.

Typical Expansion Valve

Controls amount of refrigerant into evaporator core.

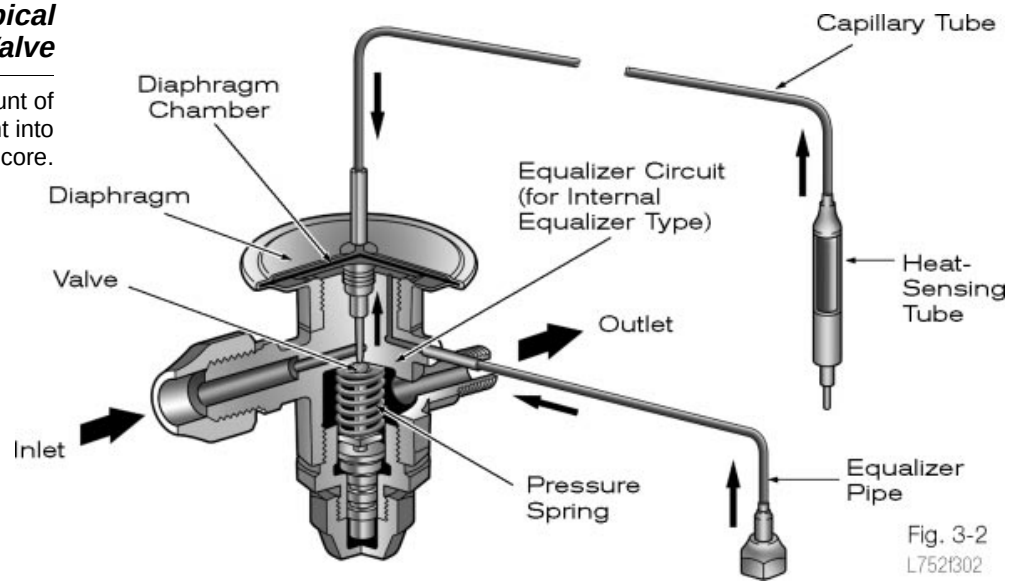

Fig. 3-2
L752f302

Most Lexus models now use a block-type expansion valve where both the evaporator inlet and outlet pass through the valve assembly. The capillary tube is located inside the stream of refrigerant leaving the evaporator.

Due to the low temperature at this point, the valve is subject to blockage by microscopic debris or internal ice if any water is present in the refrigerant. Because of this, every system has some method to filter out these elements.

Block-Type Expansion Valve

Releases high pressure refrigerant into evaporator.

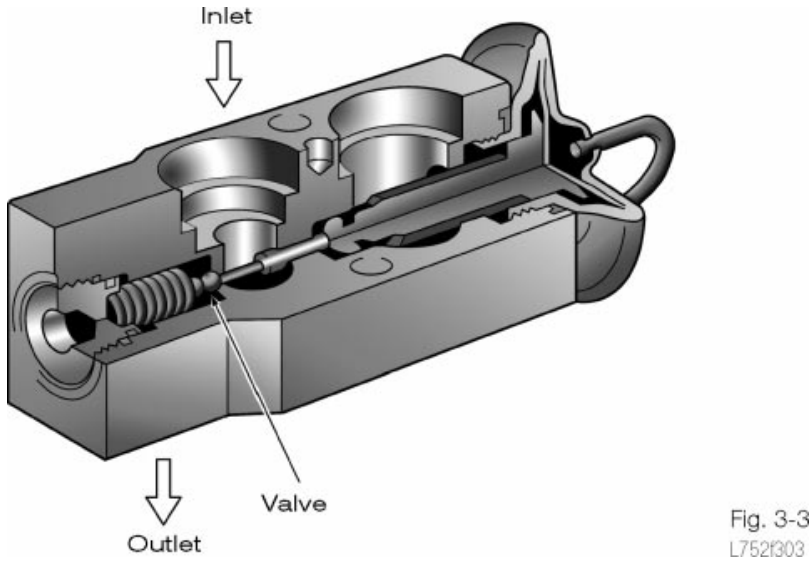

Fig. 3-3
L752f303

Not all vehicles use an expansion valve like the one described above. Some have a pressure-regulator at the **outlet** end of the evaporator. Other manufacturers use a fixed-opening orifice tube to create the pressure drop at the entry to the evaporator. This type of expansion valve relies on the cycling of the compressor clutch to vary the flow and prevent icing.

The expansion valve is located at the inlet of the evaporator. A small passage creates a pressure drop as the refrigerant enters the evaporator. The pressure drop occurs as the small spray of refrigerant expands to fill the large volume inside the tubes of the evaporator. Here is the sequence of events:

- Warm, high-pressure liquid refrigerant flows to the expansion valve
- A low-pressure spray of cold refrigerant droplets pass through the expansion valve into the evaporator
- As the cold spray contacts the relatively warm tubing of the evaporator, the **refrigerant vaporizes (becomes a gas) and absorbs heat from the evaporator and the air surrounding the evaporator**

Evaporator

The action between the expansion valve and the evaporator is the key to heat transfer in the system. The evaporator is the heat exchanger for the low-pressure side of the system. It is the key heat exchanger in the A/C system. All incoming or recirculated air passes through the evaporator. In doing so, the evaporator absorbs heat from the cabin air (car interior) or incoming fresh air so this heat can be carried to the **condenser.**

Evaporator

- Removes heat from interior as refrigerant is released into the core.
- Dehumidifies air by condensing moisture on the fins.

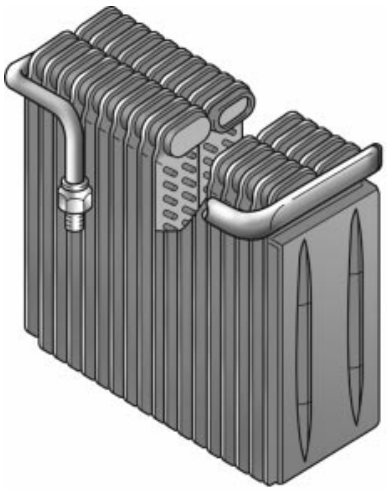

Fig. 3-4
L752f304

Evaporators are typically multiple-flow designs and made from aluminum. Since the surface fins or plates of the evaporator are usually colder than the air flowing past them, any moisture (water vapor) in the air tends to **condense** and form liquid droplets on the fins. The moisture eventually drains from the evaporator case through a drain hose to the ground. This process is called **dehumidification.**

This process of **dehumidifying** is not only important to passenger comfort, but can also be used in cold or humid climates to reduce windshield fogging. However, a large amount of heat must be removed from water vapor in order to condense it, so extreme humidity reduces the ability of the evaporator to lower the temperature of the incoming air.

Expansion Valve/ Evaporator Interaction

Since the evaporator surface temperature can be close to 32° F (0° C), there could be a problem in high humidity conditions when moisture vapor condenses on the evaporator and freezes. This frozen water forms an insulating layer that prevents air from reaching the evaporator to exchange heat.

In order to prevent icing, the expansion valve can change the size of the spray orifice (opening). The size of the orifice is controlled by a spring-loaded diaphragm that moves according to a **heat-sensing tube** (bulb). This bulb, called the capillary tube is located at the outlet of the evaporator. A thin, hollow tube connects the sensing tube to the diaphragm chamber. The sensing tube contains refrigerant and senses the evaporator temperature which changes the pressure inside the tube. The capillary tube transfers this pressure to the diaphragm to push against the spring and open the expansion valve to control refrigerant flow to the evaporator. Less flow = less heat transfer; more flow = more heat transfer.

For example, if there is a high heat load in the vehicle, the evaporator temperature will be relatively high (more heat transfer). The refrigerant in the sensing tube will therefore expand and the increased pressure will tend to open the expansion valve more. This increases refrigerant flow and heat transfer in the evaporator. When the system stabilizes, the evaporator surface temperature should remain constant at about 32° F (0° C) in order to provide the greatest heat-removing capacity.

The equalizing port in the expansion valve assists the spring to close the valve. This allows the valve to **close** in response to high pressure at the evaporator inlet to prevent **flooding** the evaporator with liquid refrigerant. If this happens, evaporator efficiency will decrease and liquid refrigerant might leak into the evaporator and eventually be drawn into the compressor and damage it.

The typical expansion valve has external equalization. The block-type expansion valve is internally vented. The **equalizer pipe** is an additional line so the equalizing port can be connected to the **evaporator outlet.** This helps prevent flooding the evaporator during operation with a high heat load.

Compressor

The compressor is driven by a drive belt and is a type of pump which moves a compressible gas, as opposed to a pump that moves a liquid (e.g. water pump). The air compressor in your repair shop and the intake and compression strokes in a 4-stroke cycle engine are two other examples of compressors.

In order for the refrigerant to exchange heat at the condenser, it must be hotter than the air outside the vehicle. The compressor accomplishes this by raising the pressure, and therefore, the temperature of the refrigerant.

An important difference between a compressor and a pump is that a compressor cannot pump liquids. Since liquids cannot be compressed, a compressor filled with liquid will either lock up or break depending on the amount of torque applied to its pulley by the engine crankshaft. More commonly, the reed valve assembly that controls gas flow inside will be destroyed when a compressor hydraulically locks.

Most compressors have a “bolt-on” fitting block to provide connections to the low-pressure side of the system (suction side) and high-pressure side of the system (discharge port). There may also be fittings on or near the compressor to connect pressure gauges.

Reed Valve Control of Refrigerant Flow

Reed valves control both suction and discharge flow.

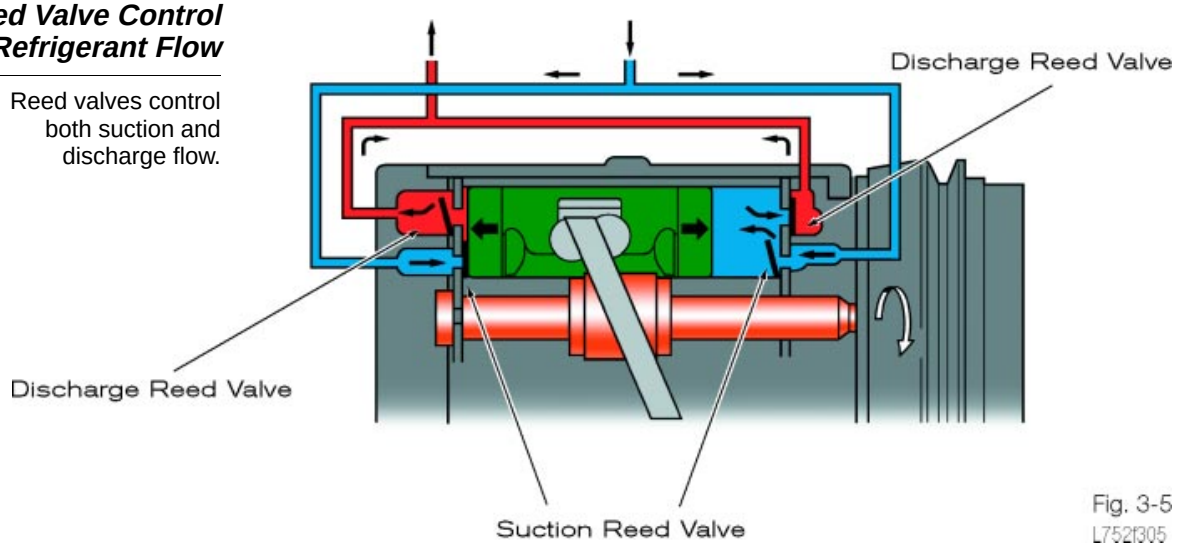

Fig. 3-5
L752f305

All Lexus vehicles use a **swash-plate** (also called “wobble plate”) type compressor. Some models use multiple, opposed pistons arranged around a single swash-plate with two compression chambers for each cylinder. The cylinders connect to reed valves and common inlet and outlet passages at each end. The swash-plate converts the rotary motion of the shaft into smooth back and forth motions of the pistons. This design provides reduced vibration and allows more pulses per revolution than a two-piston reciprocating compressor.

The pistons and housing are typically made of lightweight aluminum-alloy with Teflon® piston coating. Hardened steel balls transmit the wobbling motion of the swash-plate into reciprocating motion of the pistons. Lubrication is usually provided by the pressure differences of the refrigerant which carries oil through the system. Some early swash-plate compressor designs provide splash lubrication from a sump. Swash-plate compressors can have three, five or six single or double-ended pistons. They are labeled according to the number of piston heads and the total compressor capacity such as “6P148” or “10P175.”

Other Lexus vehicles use a **variable capacity** swash-plate compressor. With this type of compressor, a **solenoid control valve** opens and closes to adjust the low-pressure inlet to the compressor. Controlling the suction side of the compressor changes the volume capacity according to the cooling load of the A/C system. This change in pressure affects the swash-plate angle. It also changes the piston stroke and thus the amount of refrigerant discharged to the condenser. Controlling the compressor volume in this manner improves A/C performance and energy savings.

Variable Capacity Compressor and Solenoid Valve

Variable stroke of pistons.

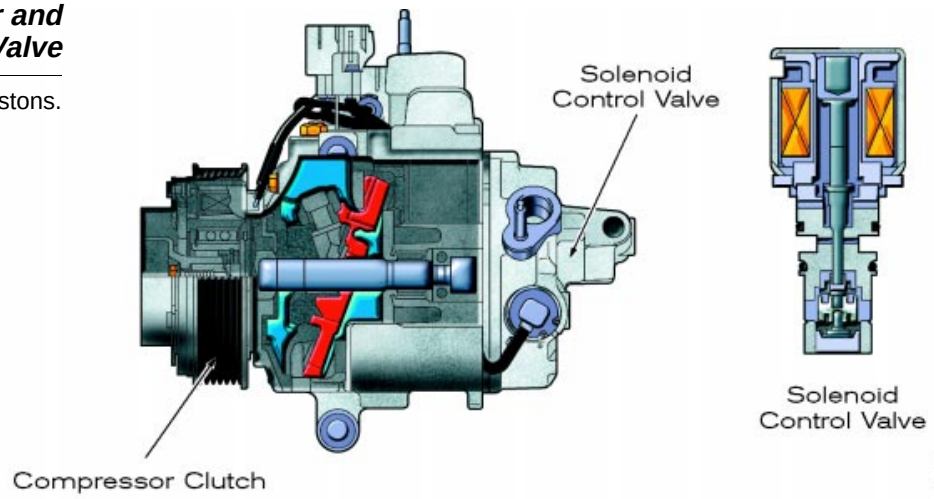

Fig. 3-6
L752f306

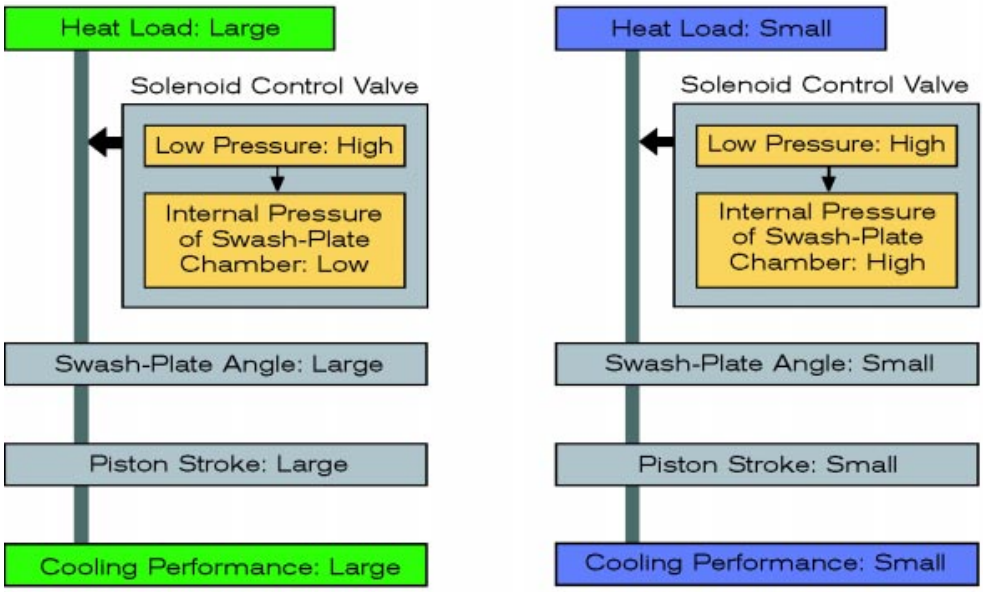

Fig. 3-7
L752f307

Compressor Clutch

A drive belt from the crankshaft pulley drives the compressor. Some systems use V-belts and some use a flat, multirib belt to help reduce frictional loss and noise. On some models, a single serpentine V-belt drives all the engine accessories including the A/C compressor. In this kind of system, an automatic tensioner maintains the correct serpentine belt tension.

Serpentine Belt System

Some models have a single belt that drives multiple components.

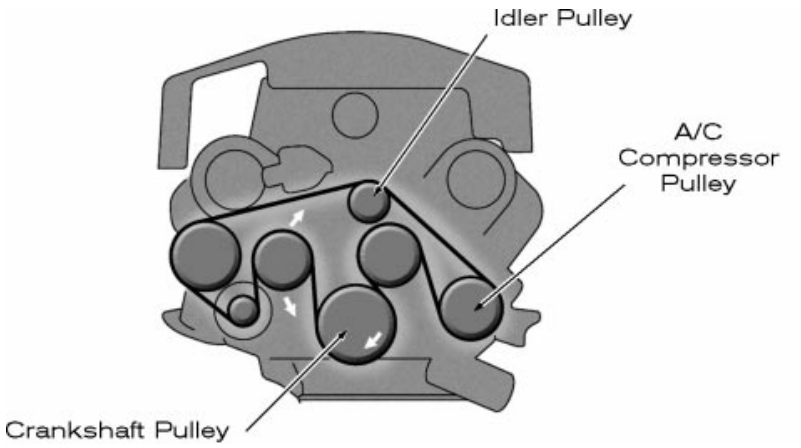

Fig. 3-8
L752f308

The compressor clutch engages and disengages the compressor as needed. With the clutch disengaged (not energized), there is no refrigerant flow and the compressor pulley spins freely.

Compressor Clutch

Engages compressor by electromagnetic action.

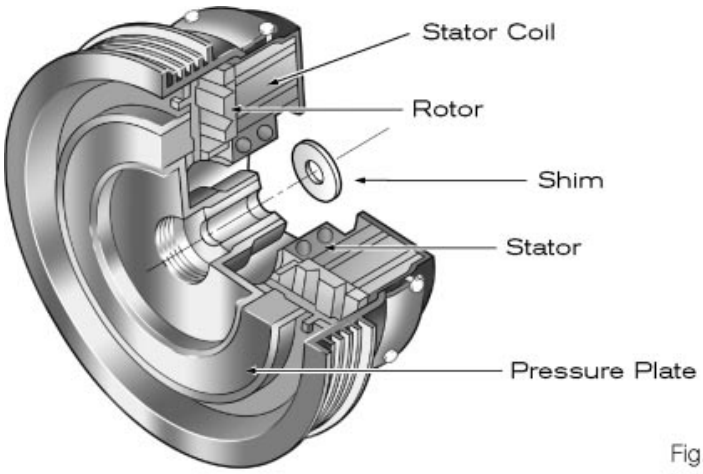

Fig. 3-9
L752f309

The single-plate clutch has an electromagnetic pressure plate to allow the compressor pulley to freewheel or drive the compressor as conditions demand. The clutch is normally disengaged. When a relay is energized, the electromagnetic coil pulls the spring-loaded pressure plate into the clutch.

The electromagnet allows A/C operation to be controlled by an electric circuit. The compressor clutch relay is also controlled by a temperature signal from the evaporator and a pressure switch in the refrigerant line. In most systems, the compressor clutch **cycles** ON and OFF periodically to allow the evaporator to warm up (defrost) during periods of high cooling demand. An evaporator cold enough to freeze moisture around it does not transfer heat as well.

Some variable capacity compressor models do not utilize a magnetic clutch and feature a spoked drive hub pulley which will breakaway if the compressor becomes locked.

Condenser

In order to condense hot refrigerant gas (vapor) from the compressor discharge port into a liquid, heat must transfer out of the refrigerant into the outside air. To do this, the condenser is located in front of the radiator in the air stream so the maximum temperature differential exists to transfer the heat. Condensers are typically made of aluminum and have a single flow or serpentine path (as shown) which increase the time available for heat transfer. Some systems now use multiple-path condensers with two or three shorter serpentine sections connected in parallel. This maximizes the time the refrigerant stays in the condenser for increased heat transfer.

Condenser

- Condenses hot, high pressure gases into a liquid.
- Heat dissipates to outside air.

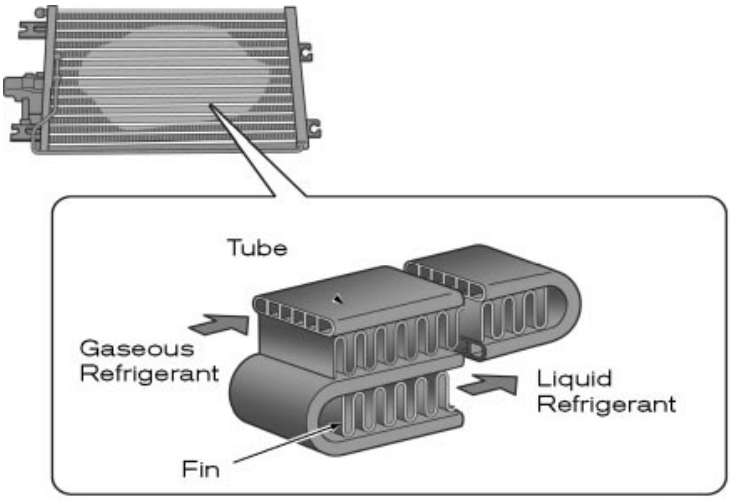

Fig. 3-10
L752f310

Current Lexus vehicles use a **sub-cool condenser** that helps separate the liquid from the gaseous refrigerant. In this design, the condenser redirects gaseous refrigerant to the top for further cooling (gas-to-liquid) while the liquid refrigerant exits from the bottom. This ensures all refrigerant sent to the evaporator is in a liquid state.

Sub-Cool Condenser

- Current models use sub-cool type.
- Super cooling portion more efficiently changes gaseous bubbles into liquid.

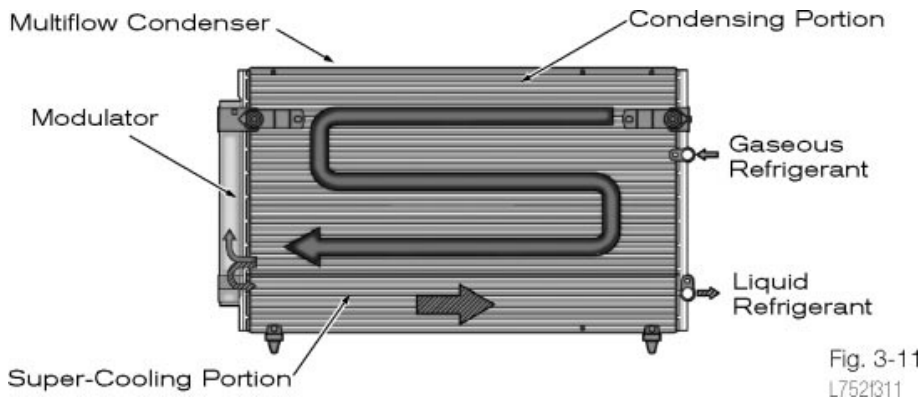

Fig. 3-11
L752f311

Receiver-Drier

The amount of refrigerant flowing through the system varies depending on heat load and ambient (outside) temperature. Because of this, extra refrigerant must be available for these different conditions. The **receiver-drier** acts as a storage tank for extra refrigerant. It also contains a filter and a **desiccant** material in an internal sack to help remove moisture in the system.

Receiver-Drier

- Removes moisture from refrigerant.
- Stores liquid refrigerant.
- Filters refrigerant.

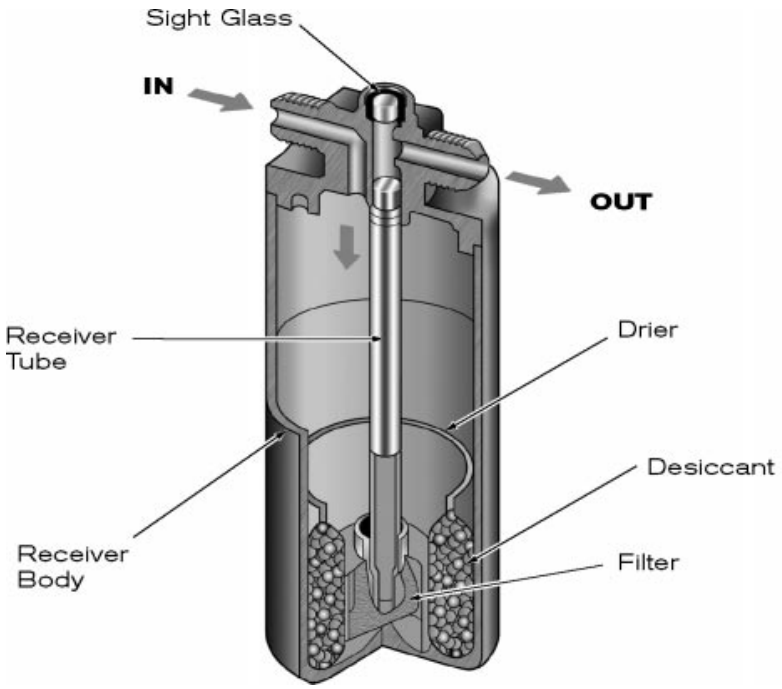

Fig. 3-12
L752f312

The outlet of the receiver-drier connects to a siphon tube that goes to the bottom of the container. This acts as a liquid/vapor separator and ensures only liquid refrigerant is supplied to the expansion valve. In addition, the end of the siphon tube has a very fine mesh screen to filter debris from the refrigerant and oil. This protects the expansion valve and the compressor from mechanical damage.

To protect the expansion valve from being blocked by ice, any moisture in the refrigerant is removed as it passes through a desiccant in the receiver-drier. A desiccant is a chemical that bonds water (H_2O) with other molecules to form a different molecule. There is a limit to the amount of moisture the desiccant can hold. After the desiccant becomes saturated, any additional moisture will pass through the system. A receiver-drier left open (fittings removed) on the shelf or in the vehicle for about 10 minutes (80% humidity) will become fully saturated and unusable.

NOTE

Because of these two functions the receiver-drier performs, it is considered a service part and should be replaced any time the system has leaked, or been left open (even for a short time), or when a component such as a compressor or reed valve has failed.

In some systems, the receiver-drier contains a sight glass that allows you to visually confirm that only liquid refrigerant is passing on to the expansion valve. This may be useful in beginning diagnosis, but it is not accurate in determining if the system has the proper amount of refrigerant. Some models use a “modulator-drier” that is part of the condenser. On current models, the desiccant is stored in the modulator portion of the sub-cool condenser to remove any trace of moisture in the refrigerant.

Pressure Relief Devices

For safety, every pressurized system must have some sort of pressure-relief system to reduce excess system pressure before it can become a hazard. In an A/C system, a **fusible plug** was one type of safety device. A fusible plug is a hollow bolt filled with a soft, low-temperature solder. The plug then threads into the top of the receiver-drier. If the pressure in the high side of the system exceeds a predetermined limit (400 psig or 30 bar) or if the temperature exceeds 220° F (110° C), the solder melts out of the bolt and the pressurized gas escapes. On current models, a pressure switch de-energizes the compressor when system pressure becomes excessive.

Possible causes of excessive pressure or temperature:

- Restriction in the high side of the system
- Overheating condenser due to restricted airflow or fan failure
- System overcharged with refrigerant
- Abnormal heat source (e.g. steam cleaner)

After the system is repaired replace the receiver-drier.

On some other vehicles, a relief valve performed the function of the fuse plug. Threaded into the compressor valve assembly, the relief valve opened when the system pressure exceeded 400 psig (30 bar). It only stayed open until the pressure fell below a lower limit. That avoided a total loss of refrigerant. A/C systems using a relief valve may also have a pressure switch to de-energize the compressor as described above. Although effective, this type of safety device vents refrigerant to the atmosphere, which is no longer allowable.

NOTE

The pressure relief valve was not designed to reseal after it opened. If you suspect the valve has opened, replace it after recovering the remaining refrigerant in the system and repairing the cause of the malfunction.

Multipressure Switch

There may be one or more pressure switches in the refrigerant lines. Current models use a **Multipressure Switch** that contains two or even three pressure-sensing circuits. It is located in the high-pressure line of the system (between the compressor and expansion valve).

- Low pressure – The low-pressure sensing circuit switches the compressor OFF. This prevents system damage due to the reduced amount of lubricant as a result of low system pressure. An external leak will also be detected by this sensing circuit.
- Medium pressure – The A/C control unit monitors pressures within this range to control the operation of the high-speed condenser fan.
- High pressure – Excessively high system pressure indicates a malfunction. This sensing circuit switches OFF the compressor clutch to prevent system damage.

NOTE

The term "**psig**" indicates gauge pressure that takes into consideration atmospheric pressure of 14.5 pounds per square inch and displays it as "0" on a pressure gauge.

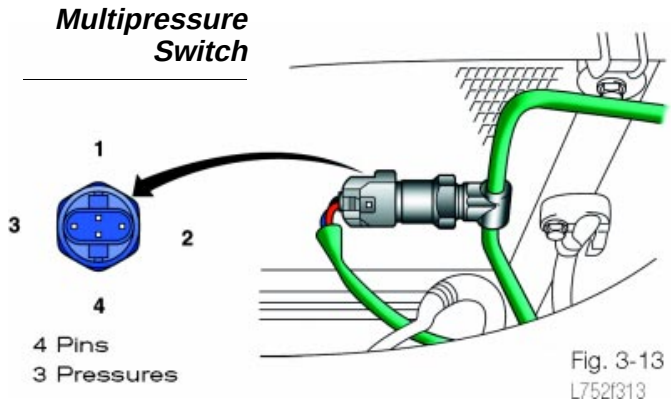

Fig. 3-13
L752f313

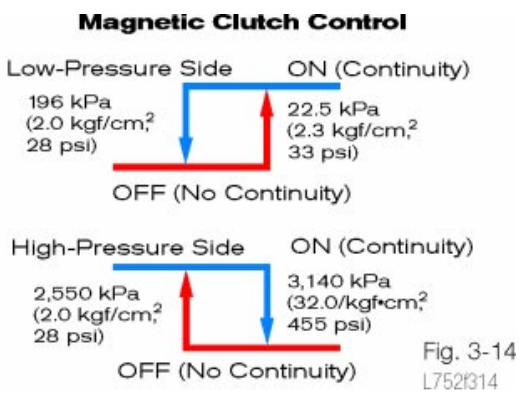

Fig. 3-14
L752f314

During normal operation, the amplifier cycles the compressor clutch ON and OFF to maintain an evaporator temperature of approximately 32° F (0° C). When the amplifier detects a malfunction in the system, it will de-energize the compressor clutch and flash the A/C signal lamp. A Diagnostic Trouble Code will generate and will stay in memory until the ignition switches OFF.

Lines and Hoses

Refrigerant flows through the system in rigid metal lines and flexible rubber hoses. Connections at each component and between lines provide convenient installation in the vehicle as well as to service and repair system components. The volume of refrigerant is always the same at any point in the system (since it is a closed system). However, since the high-pressure side has a high-density liquid, it uses much smaller diameter lines than the low side. As a rule:

- The **high-pressure** lines are **smallest** in diameter.
- The **low-pressure lines** have the **largest** diameter.

Hose Fittings On Receiver-Drier

Block-type fittings help position and secure piping.

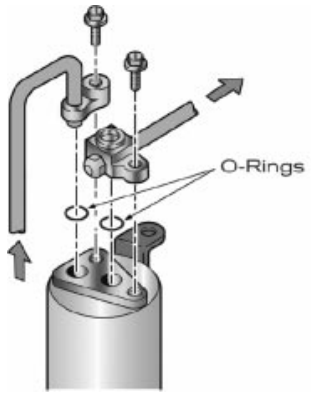

Fig. 3-15
L752f315

Unlike stationary refrigeration systems (appliance or building), mobile A/C systems must operate under high levels of vibration and motion. For this reason, all joint fittings use a gasket or O-ring to help seal the system. O-rings are made of various materials; each selected to deal with the particular refrigerant and lubricating oil used.

Fittings are typically one of three types: threaded tube-type, block-type or quick-disconnect. Threaded fittings are used between hoses and lines. The more rigid block fittings are used at system component. Block fittings provide more accurate positioning of the sealing surfaces, and they reduce the risk of tearing an O-ring due to rotation during assembly.

Older vehicles equipped with CFC-12 refrigerant have threaded metric fittings. Other vehicles may use metric or SAE (inch unit) threads for CFC-12. Fittings in a HFC-134a system are always metric and do not have notched corners on the hex nuts for identification.

Thread-Type Fittings

- HFC-134a “O” ring slip-type fit.
- CFC-12 “O” ring was crush-type fit.
- CFC-12 fittings have notch in nut position.

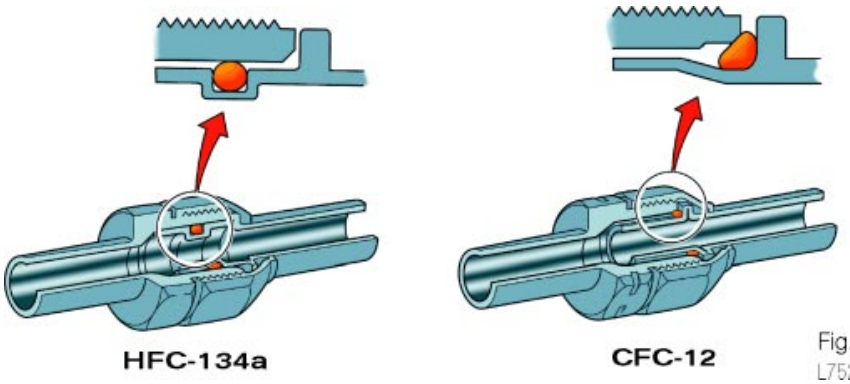

Fig. 3-16
L752f316

A quick-disconnect type fitting uses a plastic clamp lock to connect the tube endings. This type of fitting has no threads. One tube end has an O-ring that fits into a mating tube end. The plastic clamp keeps the tube ends together to create a leak-free seal. To service the system (e.g. evacuating the system — the system must be empty), a special remover tool is used to release the clamp.

Quick-Disconnect Fitting

- Clamp holds tubes in place.
- See removal SST page 4-11.

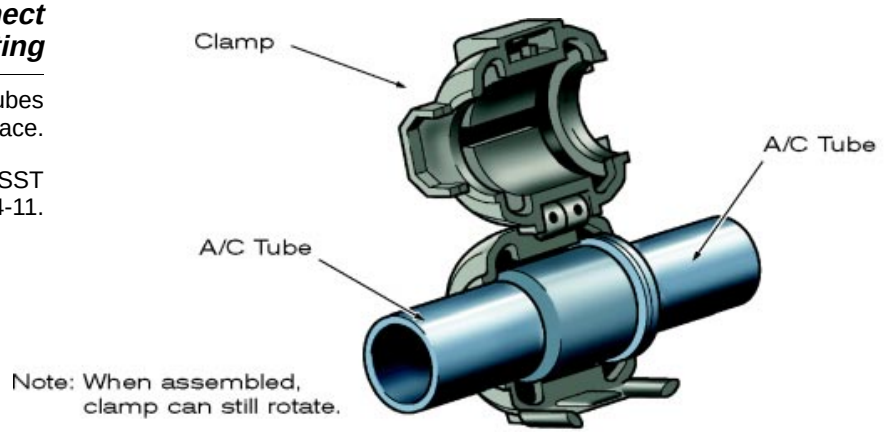

Fig. 3-17
L752f317

With threaded or threadless tube fittings, in order to ensure the proper seal under high system pressures and temperatures, A/C O-rings rest within a machined area instead of just being compressed between two surfaces like a common gasket. In order to ensure a correct seal, the O-ring must be the correct one. An O-ring that looks about right may make a joint impossible to assemble without damage or may result in a leak. O-rings should be lubricated with the correct system refrigerant oil to prevent nicks or scratches during assembly.

NOTE

With threaded fittings, the correct tightening torque is important for a proper seal. Too little torque will not provide enough pressure on the O-ring to seal and may allow the fitting to move. Too much torque may distort the fitting and make it difficult to disassemble later. Torque specifications for the different types and sizes of fittings are described in the *Vehicle Repair Manual*.

In order to apply the right tightening torque, the threads must be lubricated with oil. To prevent twisting and to relieve tension on rigid and flexible lines, hold one fitting stationary with an open-end or flare-nut wrench while tightening the other fitting. In the case of a threaded tube fitting, the male end should be held while tightening the female threaded nut.

Cooling Fans

The effectiveness of the A/C system depends on removing heat as the hot refrigerant flows through the condenser. Because of this, cooling fans become more critical when the A/C system is ON. There are two fans that contribute toward heat transfer in the engine compartment:

- A/C Condenser Fan
- Engine Cooling Fan

A/C Condenser Fans are driven either manually from the engine or electrically. Some Lexus vehicles use a belt-driven fan. Most current vehicles use electric fans. A third type of fan was driven hydraulically.

Electric cooling fan systems were first used in transverse-mounted engines in front-wheel drive vehicles (the drive belt is not near the radiator). Since the fan(s) is electrically powered, various sensors can control fan operation.

Cooling Fans

Two types:

Mechanically or Electrically driven.

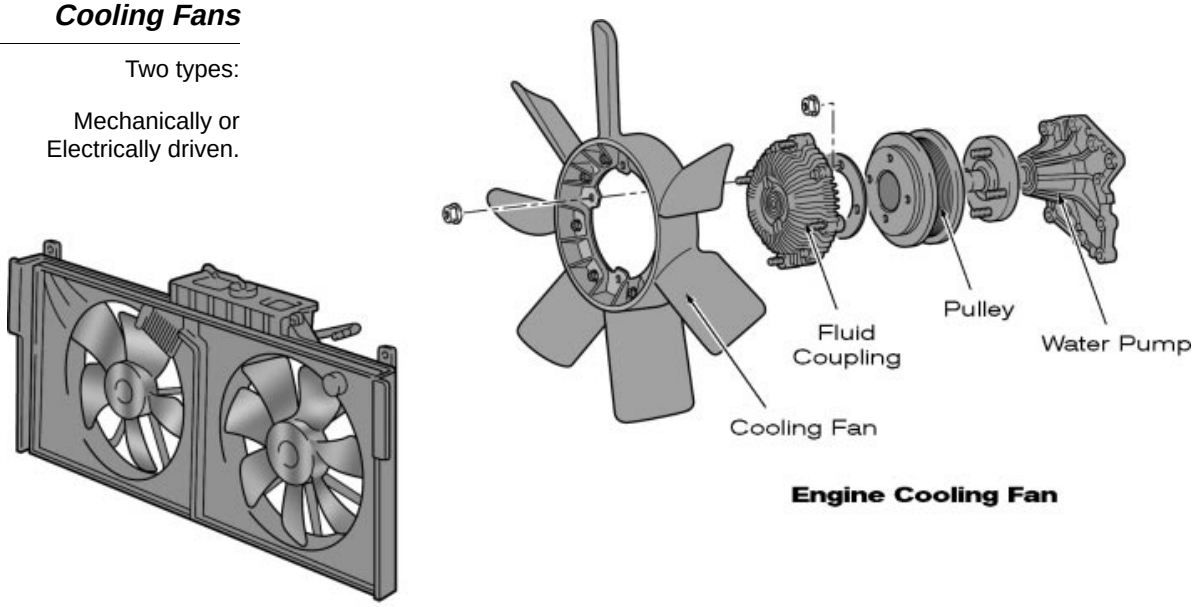

Engine Cooling Fan

Condenser Fans

Fig. 3-18
L752I318

Electric Cooling Fan Circuit

Fan relays activate cooling fans at low or high speed depending on coolant temperature or system pressure.

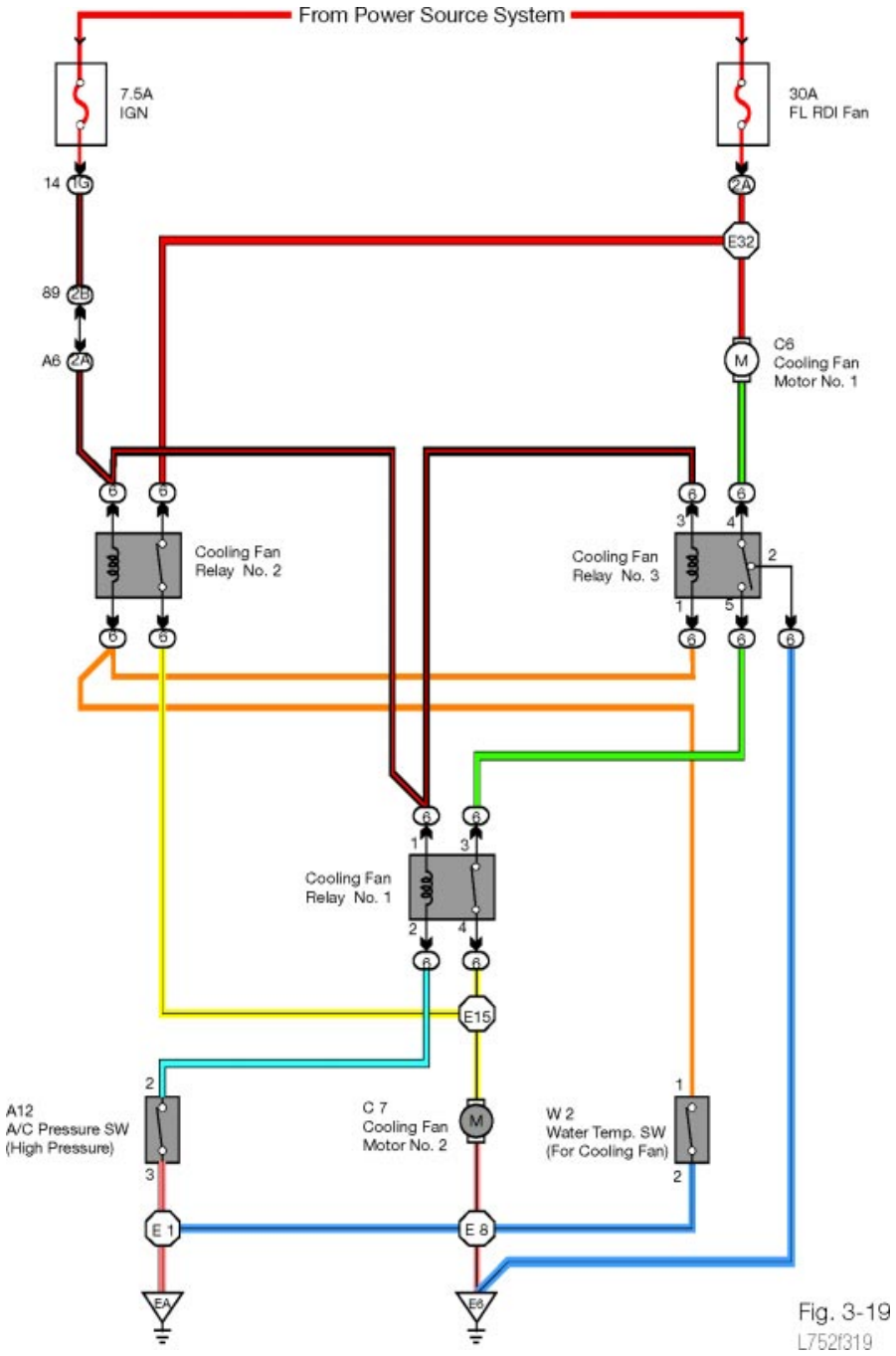

Fig. 3-19
L752f319

A fan circuit contains the following components:

- Coolant Temperature Switch (thermo-switch) located in the water jacket of the cylinder head. The coolant temperature switch is normally closed (NC). When the coolant temperature is cold/cool, the circuit path through the switch is complete (ON). The switch opens (OFF) when the coolant temperature exceeds a specified value, typically around 190° F (90° C).

- Refrigerant Pressure Switch. This switch normally monitors refrigerant pressure in the high-pressure side of the system (between the compressor and the expansion valve). If the pressure is too high or too low, the pressure switch opens to stop the compressor (via the compressor clutch). A mid-pressure setting on many cars also controls the high speed operation of the electric condenser fans.
- Normally Open Relays control the condenser fan(s) when the thermo-switch and pressure switches are closed. However, when either switch opens (sensing excessive pressure or temperature), the relays are connected in the circuit to energize the fans. The above wiring diagram shows a typical system that uses two fans that may rotate at different speeds. With this circuit, three relays are used to connect each fan to power or ground. This means that the two fans can each be connected to power and ground for high speed operation (parallel circuits) or they can be connected in series so each fan sees about half of battery voltage (about 6 volts) for low speed operation.
- In the above circuit, if either sensor shows **high resistance** (caused by a loose wire or corroded terminal) the **fans will always run at high speed.**

A fail-safe circuit in the cooling fan ECU protects the system in case of a component failure.

A/C Blower Motor

A multispeed fan motor in the air conditioning ductwork circulates cabin (interior) air or fresh exterior air through the evaporator. In early Lexus vehicles, a multiposition switch and resistor assembly in the circuit changes the source voltage to the fan motor. The resistor block contains multiple outlet terminals to introduce different resistance values into the circuit to create the multiple speeds. At its highest speed, a full 12 volts is supplied to the blower motor. To reduce blower speed, the switch introduces a different resistance to create each of the lower blower speeds. In current Lexus vehicles, the blower speed is controlled electronically by the A/C controller.

Resistor-Type Blower Switch

Current passes through some or all portions of resistor depending on blower switch speed position.

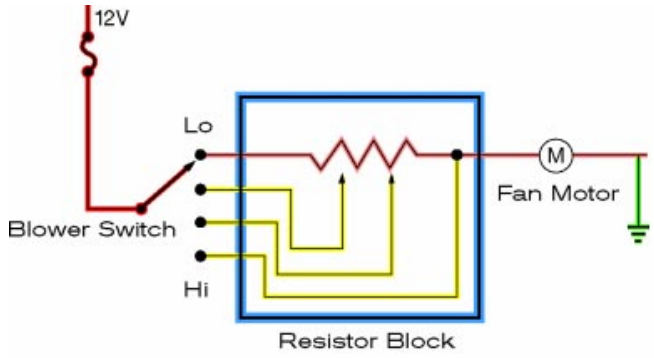

Fig. 3-20
L752f320

Review of Refrigeration Circuit

Based on the physics of heat transfer, an automotive A/C system works on these principles:

- Heat is absorbed from the passenger compartment by the **evaporator.** This happens because the **expansion valve** restricts the flow of liquid refrigerant and increases pressure. However, when the expansion valve opens, there is a drop in pressure which causes the refrigerant to evaporate and absorb heat. Dehumidification occurs as the interior air is drawn across the cool surface of the evaporator.
- The gas coming out of the evaporator has its pressure and temperature raised by the **compressor.**
- The hot gas releases heat to the outside air at the **condenser** and changes (condenses) back into a liquid before being filtered and stored at the **receiver-drier.**

A/C Refrigerant Cycle

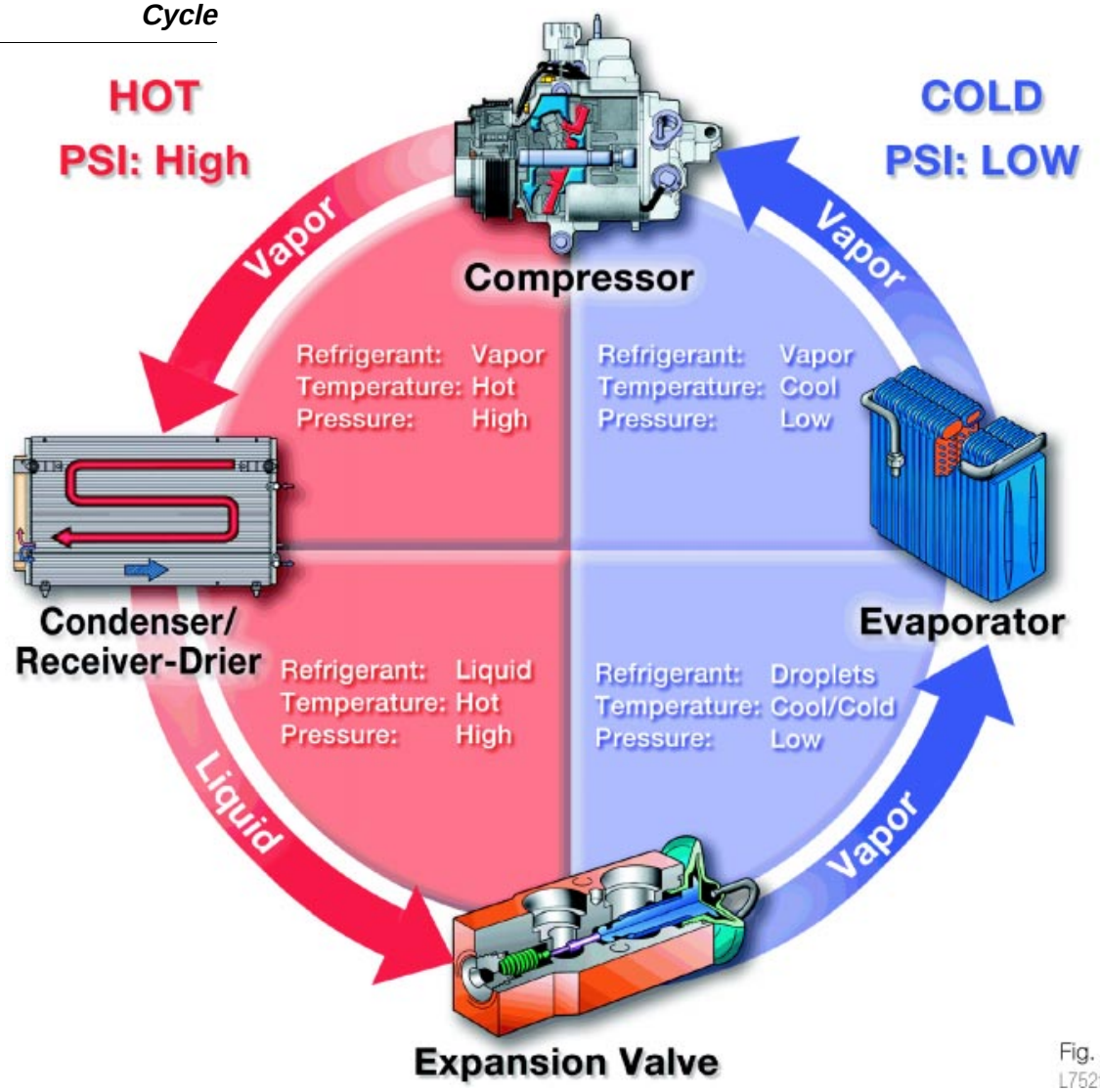

Fig. 3-21
L752I321

WORKSHEET 3-1 (IN-CLASS)
A/C Principles

Vehicle	Year/Prod. Date	Engine	Transmission

Worksheet Objectives:

Describe and identify basic terms, properties and information about vehicle refrigerants.

Background:

Servicing mobile refrigerant systems requires a knowledge of service procedures as well as the properties of different refrigerants.

Tools and Equipment:

- This worksheet

1. Compliance in handling refrigerants is covered by what law?

   _____

2. The release of refrigerant into the atmosphere can damage the _____ layer that protects the earth from excessive _____ and skin cancer.

3. CFC-12 is a _____ and HFC-134a is a _____.

4. It is unlawful to release _____ or _____ refrigerant into the atmosphere.

5. Refrigerant must be _____ from the A/C system before _____ the A/C system.

6. What test should be done before recovering refrigerant from a vehicle? _____

7. Recovered refrigerant can be reused if it is _____ and service equipment that recycle the refrigerant during recovery are known as _____ machines.

8. Placing a vacuum on the A/C system with a vacuum pump for _____ to remove _____ is known as _____.

9. What does it mean if, following recovery and evacuation, the pressure gauge raises when the vacuum is removed?

   _____ or _____

   which should be _____

10. When should evacuation be done?

    _____

11. A/C service fittings for HFC-134a have _____ for low and high sides and also have _____ within _____.

12. There is a difference between CFC-12 and HFC-134a service fittings. The CFC-12 service fittings are

    _____ type, while the HFC-134a service fittings are the

    _____ type.

13. A/C service hoses are color-coded. Low-pressure side hoses are _____ in color, while high-pressure hoses are _____ in color.

14. CFC-12 containers are _____ in color, while HFC-134a containers are

    _____ in color.

15. Halogen leak-detectors can detect refrigerant leaks of _____ leakage or more per year.

16. HFC-134a refrigerant is _____ than air, which means the leak-detector sensing probe should be held _____ suspected leak points.

17. Detecting leaks on the low side is often more effective with the A/C turned _____. High-side leaks are more easily detectable with the system _____ to increase pressures.

18. The location to check for evaporator leaks is at the evaporator case _____.

19. Suspected leak areas such as the compressor seal will often have _____.

20. Refrigerant dyes are generally _____ recommended?

21. Refrigerant dyes can _____ or if added with PAG oil can cause _____ when looking for leaks.

22. Debris in the A/C system following a compressor failure is _____ from components and lines.

23. If debris is trapped in a condenser or evaporator it should be _____.

24. Flushing is not recommended due to _____.

25. “PAG” oil is used with _____ type refrigerant.

26. “Mineral” compressor oils are used with _____ refrigerants.

27. What is the application for Denso oils numbered ND-6 _____, ND-7 _____, ND-8 _____, ND-9 _____

28. The A/C works very well to _____ windows in rainy weather.

29. When using the A/C in cold weather, remember the _____ may be _____.

30. Unusual A/C clutch noises during engagement could be related to _____.

31. The A/C compressor clutch gap is adjusted using _____.

32. When installing a REMAN compressor, it is important to check for _____ in the system.

33. Whenever the A/C system has been open to the atmosphere, or a component is replaced, you should also replace the _____, then _____ the system.

34. A/C odors are caused by _____ on the _____.

Instructor Sign Off: _____

Notes

A/C Principles

Name: _____ Date: _____

Check each category after participating in the classroom discussion and completing this sheet as you are completing Worksheet 3-1 using the A/C Principles worksheet in the classroom. Ask the instructor if you have any questions regarding the topics provided below:

I have questions

I know I can

Topic			Comment
A/C Technician Certification Requirements			
Refrigerant recovery requirements			
A/C Recovery and Charge Station Requirements			
Refrigerant Containers and Cross Contamination Issues			
Non-condensable Gas (air) Purging			

Notes

WORKSHEET 3-2 (ON-CAR)
LS430 A/C Component Identification

Vehicle	Year/Prod. Date	Engine	Transmission

Worksheet Objectives:

Locate and identify system components in both front and rear A/C units on an LS430 vehicle and LS430 simulator.

Background:

Successful diagnosis and troubleshooting requires identifying and knowing where the various A/C components are located.

Tools and Equipment:

- *Vehicle Repair Manual*
- TIS Machine
- LS430 vehicle and LS430 simulator

Section 1
Identify Basic A/C Components

1. Using the LS430 *Vehicle Repair Manual* and *NCF Manual*, locate and identify the following basic A/C components:

Component	Simulator	Vehicle	General Location
S7B compressor			
Multipressure Switch			
Expansion valve			
High pressure A/C service fitting			
Sight Glass			
Low pressure A/C service fitting			
Heater water valve and water valve control cable servo-motor			
Sub-cool condenser and modulator			
Sub-cool condenser dryer access			
Evaporator assembly			
Heater unit			
Blower assembly			

Instructor Sign Off: _____

Stop: Do not proceed without Instructor's approval

Section 2

Identify Auto A/C Components

2. Using the LS430 *Vehicle Repair Manual* and *NCF Manual*, locate and identify the following auto A/C components:

Component	Simulator	Vehicle	General Location
Ambient temperature sensor			
Air mix servo-motors			
Smog ventilation sensor			
Room (interior) temperature sensor			
A/C ECU			
Solar sensor			
Climate control seat switches			
Climate control seat fan motor units			
Front clean air filter			
Rear clean air filter			
Photo catalyst (Xenon tube)			

Instructor Sign Off: _____

LS430 A/C Component Identification

Name: _____ Date: _____

Check each category after participating in the classroom discussion and completing this sheet as you are completing Worksheet 3-2 using the LS430 A/C Component Identification worksheet in the shop. Ask the instructor if you have any questions regarding the topics provided below:

I have questions

I know I can

Topic			Comment
Location and type of Compressor			
Location and type of Condenser			
Location of Filter-drier (receiver-drier)			
Location and purpose of sight glass			
Low-side and High-side A/C Fittings			
Hot Water (heater) Valve			
Cabin Filter (front and rear)			
A/C Controls and Sensor locations			
A/C Evaporator and Servos			

Notes

Section 4

Diagnosis and Repair

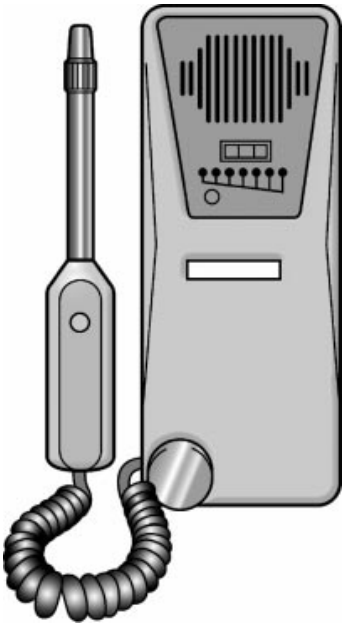

Lesson Objectives

1. Demonstrate systematic diagnosis and the six-step process.
2. Demonstrate leak detection techniques and proper use of a leak detector.
3. Demonstrate refrigerant identification, recovery, recycling, evacuation and recharging.
4. Successfully operate a refrigerant recovery/recharging machine.
5. Successfully remove and replace the clutch on an A/C compressor.
6. Operate a tester to identify refrigerant contaminants.
7. Locate the leak detector TSIB using the TIS, then perform a refrigerant leak test.
8. Evaluate proper A/C operation using the “Touch and Feel” procedure.
9. Evaluate proper A/C operation by interpreting manifold gauge pressures.

Systematic Diagnosis

As with any mechanical system, you should conduct a Systematic Diagnosis of the complaint to repair a nonfunctioning A/C system. Systematic Diagnosis is:

- Based on a clear understanding of how the system works or should work.
- A logical, systematic approach to the process of finding the malfunction.

LEXUS Six-Step Diagnosis Process

1. Verify the complaint
2. Determine the related symptoms
3. Analyze the symptoms
4. Isolate the cause
5. Correct the cause
6. Check for proper operation

System Checks

A complete check of the mechanics and performance of the A/C system will quickly reveal areas in need of attention. You can perform simple and easy-to-do "sight, sound and touch" checks before starting the vehicle or attempting to run the A/C system. These include:

1. Verify outlet temperature (35°– 45° F) with a Performance Test (see Performance Testing in this section).
2. Coolant Level – An overheated engine will not achieve full cooling performance.
3. Compressor drive belt tension – At full load, the compressor requires high drive torque to drive the belt. The *Vehicle Repair Manual* specifies the correct tension.

NOTE

A blinking A/C light indicates a possible compressor lockup situation. After making any necessary adjustments, carefully observe what happens right after starting the engine and switching ON the A/C.

4. Listen for the loud "click" that indicates the compressor clutch has engaged (energized). Observe any unusual compressor noises. Confirm that the electric fans immediately run at low speed.

5. Look into the sight glass (on receiver-drier, if available):
   - It should appear clear, as liquid refrigerant with a few bubbles of vapor flowing out of the receiver-drier (an almost empty system will also appear clear).

Sight Glass

Note: Sight glass not accurate method to properly charge system.

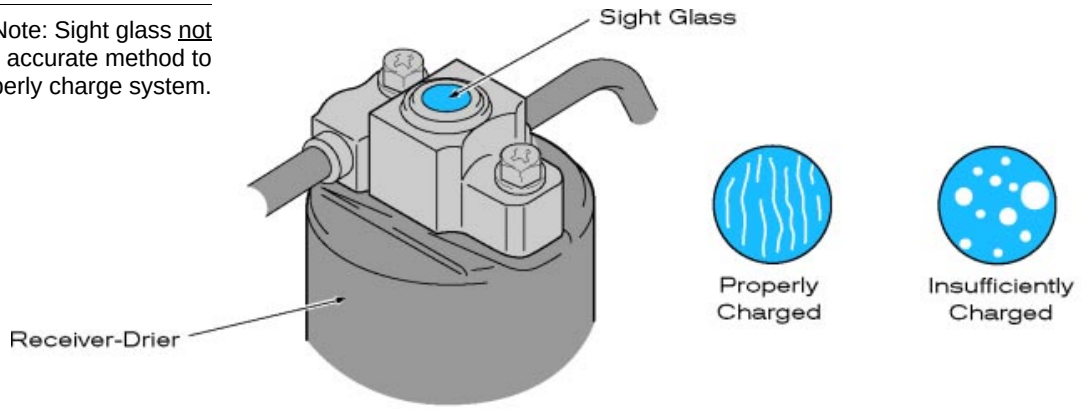

Fig. 4-1
L7521401

   - Excessive bubbles may indicate an undercharged system.
   - A cloudy flow indicates the desiccant has escaped from its bag container or there is moisture in the system.
   - If there is no movement visible, just cloudy streaks, the system is empty.
6. Carefully touch accessible refrigerant lines to confirm system operation:
   - Low-pressure lines should feel cold to the touch. In humid weather, moisture may condense on these lines.
   - High-pressure lines should be hot to the touch.
   - A high-pressure line that feels cold indicates a pressure drop due to an obstruction in the system such as a clogged fitting or a crushed refrigerant line.

Need for Periodic Maintenance

Periodic maintenance is required on all A/C systems. Ideally, a leak-free system should keep running for many miles, but a variety of conditions can cause the system to malfunction or to not operate at peak efficiency:

- Systems with conventional rubber hoses will suffer a gradual loss of refrigerant. Moisture will also enter the system through these hoses due to the porosity of the hose material. Both problems will be aggravated by heavy A/C use in humid climates.
- Newer, nonpermeable hose materials reduce refrigerant loss through rubber hoses. However, A/C systems still gain moisture and gradually lose refrigerant through the compressor shaft seal. During long periods of system inactivity, the seals lose their oil coating and sealing ability.
- Water can enter the system and form weak solutions of hydrochloric and hydrofluoric acids. These acids will wear out internal components and may lead to pinhole leaks in the system.
- Normal wear and tear of moving parts inside the compressor and expansion valve will reduce system efficiency and may clog small passages in the system.

A/C-Specific Maintenance and Inspection

These situations may cause the system to not cool, and not show any mechanical failure. Because of this, the A/C system requires periodic maintenance to restore it to an efficient operating condition. Periodic maintenance includes the following:

- Visually inspect the system for airflow restrictions, drive belt tension and obvious component failure.
- Check system operating pressures to confirm low charge condition.
- Recover the refrigerant from the vehicle.
- Evacuate the system to remove any moisture.
- Partially charge and check the system for leaks.
- Repair any leaks as needed.
- Recharge the system and check its performance, including the fan system.
- Remove any debris or dirt from condenser fin surfaces.

Diagnostic Trouble Codes (DTCs)

Automatic A/C systems use an electronic control unit to control the refrigeration and the air distribution systems. To diagnose the system, the A/C ECU provides several Diagnostic Trouble Codes (DTCs) to help identify the malfunction. Periodic maintenance includes checking for DTCs. An OBD II scan tool connected to the vehicle's Data Link Connector can also read DTCs in the system. In addition, the scan tool may be able to check the operation of various A/C system actuators.

Chart of A/C DTCs

DTC No. (See Page)	Detection Item	Trouble Area	Memory
00	Normal	—	—
11*[1] (05–470)	Room temperature sensor	• Room temp. sensor • A/C amplifier (Heater Control Housing) • Harness or connector between room temp. sensor and A/C amplifier (Heater Control Housing)	O (8.5 min. or more)
12*[2] (05–473)	Ambient temperature sensor circuit	• Ambient temp. sensor • Harness or connector between ambient temp. sensor and A/C amplifier (Heater Control Housing) • A/C amplifier (Heater Control Housing)	O (8.5 min. or more)
13 (05–475)	Evaporator temperature sensor circuit	• Evaporator temp. sensor • Harness or connector between evaporator temp. sensor and A/C amplifier (Heater Control Housing) • A/C amplifier (Heater Control Housing)	O (8.5 min. or more)
14 (05–478)	Water temperature sensor circuit	• Harness or connector between ECM and A/C amplifier (Heater Control Housing) • ECM • A/C amplifier (Heater Control Housing)	–

Fig. 4-2
L752f402

On some vehicles, the scan tool may not be able to retrieve DTCs in the system. If this is the case, DTCs can be read by observing a blinking pattern on the Malfunction Indicator Lamp (MIL) or by a display on the A/C control panel. The procedure to access DTCs in this manner is described in the *Vehicle Repair Manual* and in Section 7 of this *Student Handbook*.

DTC Check on A/C Control Panel

- Code appears on panel.
- Multiple codes flash alternately.

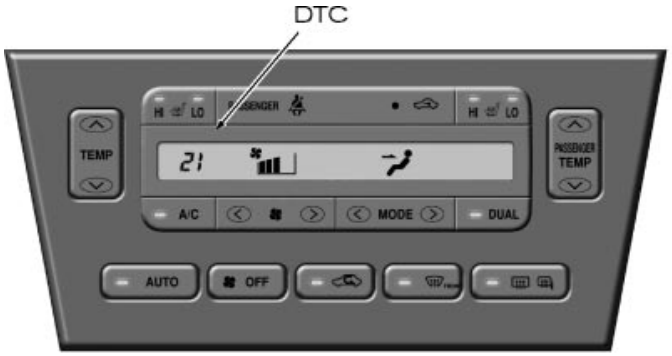

Fig. 4-3
L752f403

Special Tools

Here are some special tools needed to service and test the A/C system:

Thermometer

- **Thermometer** – Essential to compare vent outlet temperature with ambient (outside) temperatures during performance checks and for checking system pressures.

A/C Pressure Gauge

- **A/C Pressure Gauge** – Determines how much refrigerant is in the system. It also provides a convenient location to attach other service equipment to the system. Part of a Manifold Gauge Set or built into a Charging-Recovery Station. Two gauges are connected to the system; one for the low-pressure side and the other for the high-pressure side. The gauges and hoses follow a standard color code. The low side is **blue** and the high side is **red**. Each gauge shows the pressure in that part of the system.

When part of a Manifold Gauge Set, the valves (marked Low and High), allow one or both inlets to connect to a central passage (thus the term "manifold"). A third hose fitting is reserved for charging or evacuating the system.

The center hose of a manifold gauge set connects to a refrigerant tank for charging or to a vacuum pump for evacuating the system. Charging the system must only be performed on the low-pressure ("suction") side. This prevents dangerous pressure from developing in the refrigerant supply tank.

A/C Pressure Gauge Connection

Note: Pressure gauges are built into the latest recovery machines.

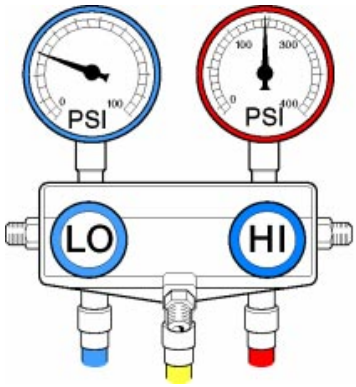

Fig. 4-4
L752f404

The static charge (system pressure with system OFF) is also of value when troubleshooting. The "rule of thumb" is a 1:1 ratio on the gauge reading; approximately 1 psig for every 1° F of ambient temperature. Thus, on an 80° F day, the system should have approximately 80 psig static pressure.

CAUTION

For your safety, ensure each hose is connected to the correct service port in the system. On older CFC-12 systems, the two fittings may be the same size: the high-side fitting is always a smaller diameter line, and the low-side fitting is in a larger diameter line. If in doubt, consult the *Vehicle Repair Manual* and carefully follow the refrigerant path to confirm each fitting.

The following chart describes the pressures in a fully charged system given the ambient (existing) temperature in the test area. Because humidity places a higher load on the A/C system, pressures will vary within the range shown depending on the relative humidity. These pressures also assume adequate airflow over the condenser: Position an external fan to blow air through the front bumper opening, particularly on rear-wheel drive vehicles with a belt-driven fan.

Normal Refrigerant System Pressures

Ambient Temp °F	High Side PSIG, HFC-134a	Low Side PSIG, HFC-134a	High Side PSIG, CFC-12	Low Side PSIG, CFC-12
60	120-170	7-15	120-150	5-15
70	150-250	8-16	140-180	8-16
80	190-280	10-20	160-250	10-18
90	220-330	15-25	200-280	12-25
100	250-350	20-30	220-300	15-30
110	280-400	25-40	250-320	20-35

(These pressures are also listed in the *Vehicle Repair Manual* in metric units of ° C and kg/cm2.)

It is normal for the gauge needles to fluctuate (change reading) as the clutch cycles ON and OFF and the heat load changes, but they should not swing wildly. In addition:

- If the test pressure is below the ranges indicated, this indicates an undercharged system that cannot exchange heat efficiently.
- Normal low-side pressure along with a much greater than normal high-side pressure indicates air in the system.
- When both pressures are above range, the system is overcharged or insufficient air is flowing through the condenser.
- If both gauges show equal pressures in the 60-80 psig range, this indicates a fully charged system with an inoperative compressor. Additional conditions and specific component failures can be diagnosed based on gauge readings as shown in the *Vehicle Repair Manual*.
- Correct refrigerant charge amount is listed both in the *Vehicle Repair Manual* and on an underhood label, which also list the correct compressor oil type.

Recovery-Recycling-Recharging Station

Recovery-Recycling-Recharging Station – A self-contained unit that connects to the A/C system. This unit monitors system pressures as well as recycles, evacuates and recharges the system with the correct amount of refrigerant. These stations usually contain pressure gauges to connect to and to monitor system pressures. There is additional information in this section.

Recovery-Recycling-Recharging Station

- Refrigerant type specific for CFC-12 or HFC-134a systems.
- Used for recovery, recycling, evacuation and recharging.

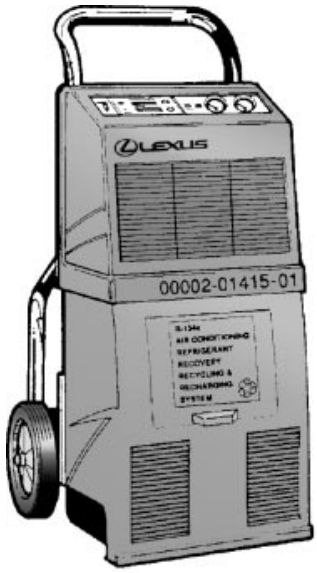

Fig. 4-5
L752I405

Leak Detection

Leak Detector – Low gauge readings usually indicate the system has a leak. A small quantity of refrigerant in the system generally indicates a small leak. However, the gauge can't tell you where to locate the leak. A simple visual inspection may reveal large leaks, especially those that result from body damage. Oil stains are usually found around any refrigerant leak. System fittings are the most likely sources of leaks.

When the leak is not obvious, a leak detector can be used to pinpoint the source. Finding a leak this way requires some refrigerant in the system. You can find a leak if the vehicle has high-side pressures greater than 60 psig. If system pressure is lower than this, add no more than one pound of refrigerant to the system, then test. After leak testing, use the recovery station to remove the refrigerant before opening the system for repairs.

The most accurate way to find leaks is with an electronic leak detector. Modern units can detect leaks as small as one ounce per year. The detector contains an audible or visual signal to indicate a leak. Finding leaks with a leak detector is a skill that requires patience and knowledge of the principles of refrigerants.

Electronic Leak Detector

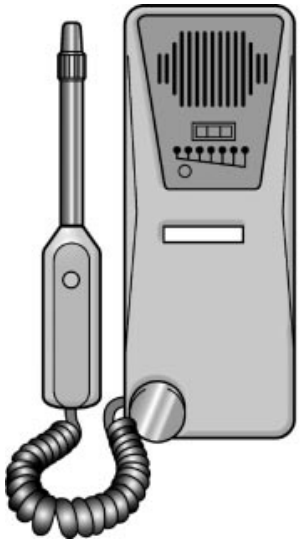

Fig. 4-6
L752f406

Here are some tips using a leak detector:

- Refrigerants are three to four times heavier than air. Thus, the leak will be easiest to find below the leak source.
- Look for streaks of oil around suspected leak areas.
- Leaks on the high-pressure side may be easier to find when the system is operating.
- Leaks on the low-pressure side may be easier to find when the system is not running.
- Small leaks will be easier to detect when the system is OFF and no fans are blowing air.
- After locating a suspected leak, use compressed air to blow residual gas from the area.
- Many leak detectors do not sense at the tip, but rather inside the unit. Allow time for the sampled air to be drawn into the unit by moving the tip no faster than one inch per second.
- To check for refrigerant leaks in the evaporator, probe the evaporator drain tube under the vehicle after clearing any mud or water from the area. With the A/C system OFF, cycle the A/C blower motor ON briefly to blow any refrigerant through the drain tube.
- To detect leaks inside the plenum (air distribution housing), switch the fan OFF for a minute then click it ON momentarily to force any leaking refrigerant gas to the outlet vents where the leak can be detected.

Older leak detection techniques rely on a torch flame that changes color in the presence of CFC-12. Due to the danger of potential phosgene gas poisoning, do not use this type of detector. Colored and ultraviolet dyes have also been used, but there's a danger of staining interior fabrics using these dyes.

Leak-Testing Dyes

Lexus does **not** recommend using leak-testing dyes as their long-term residual effects have not been fully tested. Some dyes lose their effectiveness over time and leaks are not accurately detected once the product has dried away from the leakage area. Leaks located within an evaporator case or in a hard-to-see location may also go undetected and repeated applications of dyes during repeated checks can raise the level of contamination of the system lubricant with unknown adverse effects. Dyes are often injected with a new charge of PAG oil. Repeated dye applications will result in “over oiling” the system requiring thorough cleaning and flushing of the system.

System Sealant (”Stop Leak”) Products

Lexus does **not** recommend the use of A/C system sealants for minor repair of leaks or as a preventative additive during system service. System sealants may cause gumming of system passages and may even result in magnetic clutch engagement problems if the leak is at the compressor front seal. Warranty reimbursement could be denied if a subsequent component failure is linked to the use of sealants in a Lexus system. The air conditioning supplier company (Denso®), does not recommend sealant products in the system. If not performed properly, flushing out residual sealant gum may result in serious consequences.

Several charging station equipment manufacturers have stated that their equipment is damaged by the use of both system sealant and refrigerant dye products being present in the A/C system. Damage by contamination is not included in the equipment warranty and cannot be repaired at the dealership.

Refrigerant Identifier

Refrigerant Identifier – Verifies the type of refrigerant in an A/C system. Refrigerant supply and system cross contamination is unfortunately very common in the industry. Unprofessional retrofitting, illegal top-offs and unapproved drop-in replacement refrigerants can contaminate dealership equipment and storage container supplies. Decontaminating equipment can be very expensive. A good rule is to use the refrigerant identifier equipment on every vehicle that enters your service department for A/C service or testing even if your dealership originally retailed the vehicle.

It is also highly advisable to check every new supply container of replacement refrigerant purchased before connecting it to your charge station, regardless if you obtained it from a familiar source. Follow the refrigerant identifier equipment manufacturer's procedures and recommendations on judging for cross contamination. Keep a "contaminated refrigerant" container on hand that is well marked for the recovery and disposal of contaminated refrigerant the identifier has detected. Keep the above special contaminated refrigerant container separate from noncontaminated supplies and dispose of it properly at an authorized recycler when it is filled to capacity. Do **not** just release contaminated refrigerants to the atmosphere. This is both harmful to the environment and very costly if you are caught. Be sure you are certified to handle and recycle refrigerants by an accredited association such as MACS or ASE. Not being certified can be expensive in fines and loss of business.

Refrigerant Identifier

- Prevents cross-contamination.
- Detects air in system.
- Reads in %.

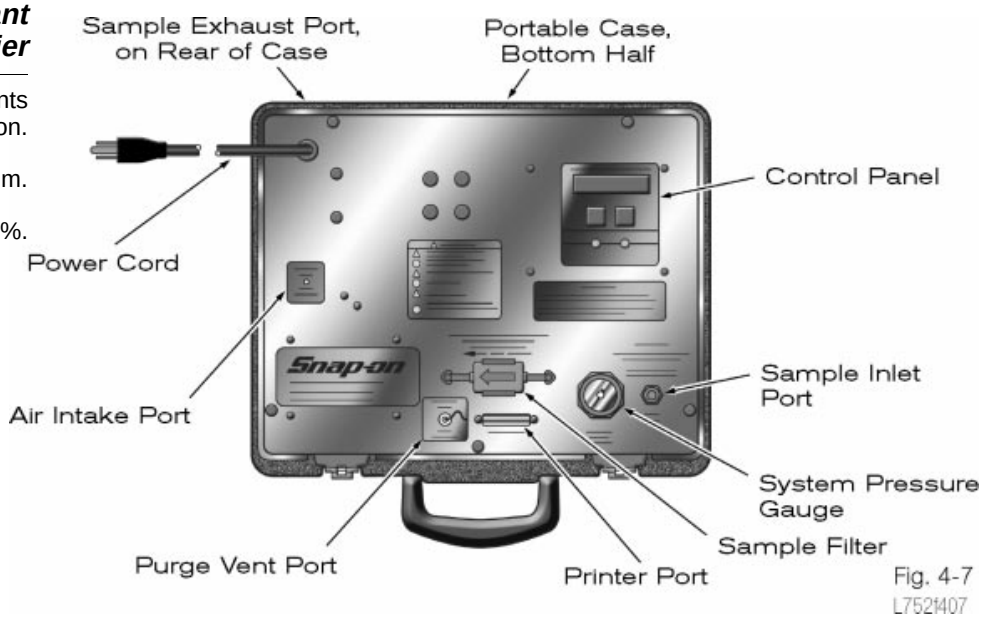

Fig. 4-7

Drive Belt Tension Gauge

Drive Belt Tension Gauge – Accurately measures the tension of multiribbed belts. Multiribbed belts do not tolerate stretch as much as V-belts.

- Insufficient tension will result in belt slippage.
- Excessive tension puts extreme loads on the front compressor shaft bearing.
- There are different tension specs for new versus used belts.
- Serpentine drive belts drives may have a scale on an automatic belt tensioner to indicate belt wear. If the arrow falls outside the scale area, replace the belt.

Belt Tension and Wear

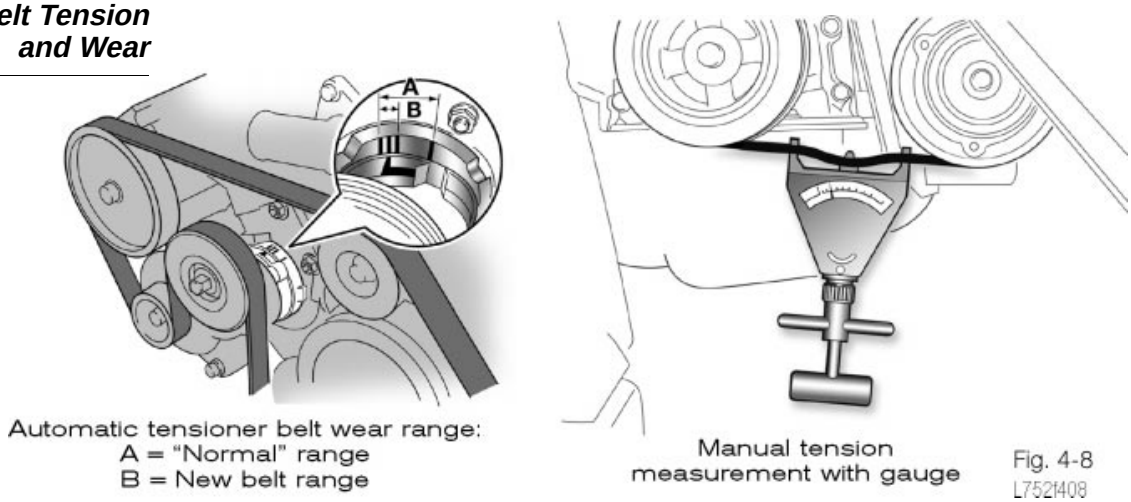

Fig. 4-8
L752f408

Miscellaneous Special Tools

- **Hand Vacuum Pump** – Used to test vacuum-operated devices.
- **Torque Wrench** – Along with adapters, a torque wrench is needed to tighten fittings to the proper torque. A set of four, fixed preset, open-end SST torque wrenches are available in the appropriate sizes.
- **Quick Disconnect Tool** – Removal tool to separate high and low pressure refrigerant lines using a nonthreaded fitting. The tool frees the clamp which allows the refrigerant lines to separate.

Quick Disconnect Tool

- For quick disconnect fittings.
- Two sizes.

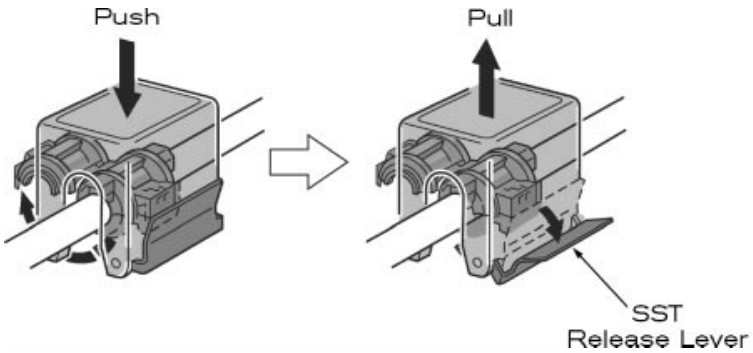

Fig. 4-9
L752f409

- **Shaft Seal Protector Tool** – Compressor shaft seals can be replaced if they leak. This tool protects the shaft seal from tearing when installing the compressor front housing over the compressor shaft threads.

Shaft Seal Protector Tool

Used to protect shaft seal when installing front housing.

Fig. 4-10
L752f4010

- **Front Seal Driver-Installer** – This special tool allows easy removal of the compressor shaft seal from the front housing. It is also used to install the compressor seal.

Front Seal Driver-Installer

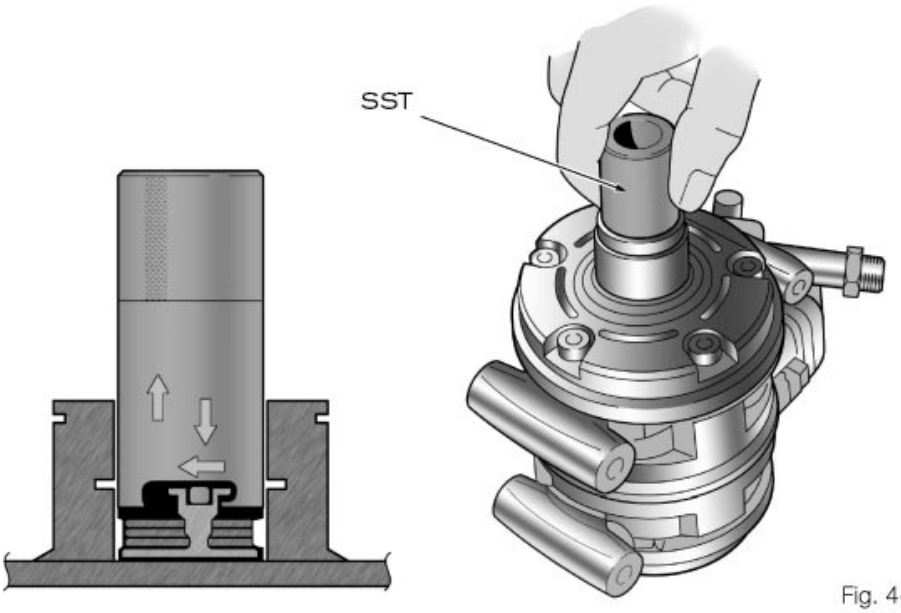

Fig. 4-11
L752f411

Resource Materials

The Lexus *Repair Manual* for each vehicle is always the starting point for diagnostic and service information.

Repair Manual

- Air conditioning and heating section.
- Diagnostic section.

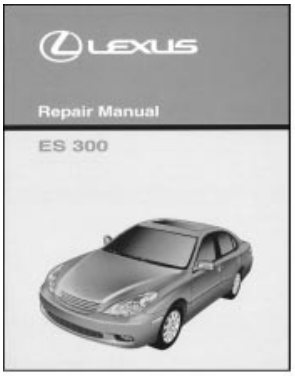

Fig. 4-12
L752f412

The manual includes:

- *Symptomatic* troubleshooting charts
- Pressure gauge readings for various conditions
- Component locations and repair procedures
- Refrigerant charge quantity and oil quantity for component replacement

Lexus *Electrical Wiring Diagrams* (EWDs) also are needed to diagnose and repair. They contain location diagrams and testing specifications for electrical components.

EWD Manual

- System schematics and power circuits.
- Connector locations.
- Ground locations.

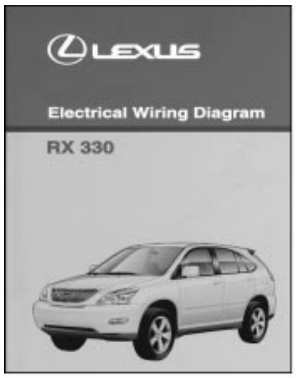

Fig. 4-13
L752f413

Troubleshooting, Service and Repair Tips

A variety of maintenance conditions can affect the A/C system that may not be revealed by standard diagnostic procedures.

- If a system does not blow sufficient air, check for obstructions of the fresh air intake or body exhauster vents outside the vehicle.
- Restricted (clogged) fresh air filter behind glove box needs replacement.
- The expansion valve may fail in the open mode as a result of debris in the system (perhaps from a past malfunction). The expansion valve can also seize in the closed position due to a loss of lubricant. Apparent expansion valve failure may simply be a case of the capillary tube ("sensing bulb") not being in contact with the evaporator outlet line.
- Paper, leaves and mud can clog the condenser fins. This reduces system performance and can cause overheating and a blown fusible plug or relief valve. The debris can often be blown out with compressed air or a water hose. If necessary, special "combs" are available to straighten bent condenser fins.

Clearing Condenser Obstructions

Bugs or dirt will increase system pressures and reduce cooling efficiency.

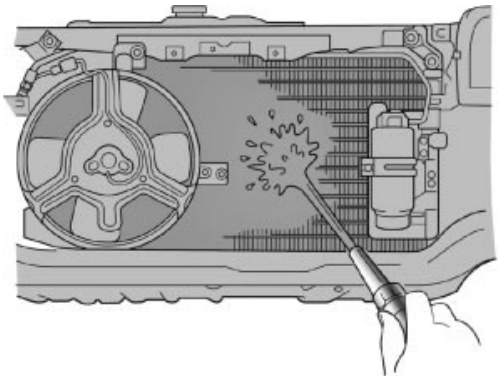

Fig. 4-14
L752f414

- A system which does not produce cool air or blows a visible mist (even though the fan works) may have one of two malfunctions:*
  1. An iced evaporator. This can be caused by using MAX cooling with a low fan speed or a failure in the thermistor/amplifier unit (to be discussed in A/C controls).
  2. The evaporator drain hose may be clogged with leaves or mud which will cause the evaporator housing to fill with ice and water. This will restrict airflow. A wet carpet is one symptom of a clogged evaporator drainline.

     * Some mist or fog can normally occur on humid days when the system is first switched ON.
- A simple way to check the operation of the electric fan system is to unplug the coolant temperature switch or refrigerant pressure switch while the ignition is ON. This will result in the fans running at HIGH speed.

- Every system will slowly lose refrigerant through the front compressor seal, especially if the system is unused for long periods and the lip seal dries out. It is not unusual to lose half a pound each year. At this rate, the system will lose its effectiveness in two to three years. This slow leak will not be apparent during normal maintenance and is too small to be detected with a leak checker.
- A system that loses more than half a pound per year has a real leak. Leaking front seals may be easy to diagnose due to the oil stains on the clutch and in front of the compressor. The seal is easily replaced and on some models it can be done without removing the compressor. When handling the front seal, always coat your fingers in oil to prevent body oils and acids from etching the delicate sealing surface.

Recover any refrigerant remaining in the system before removing the seal.

Compressor Seals

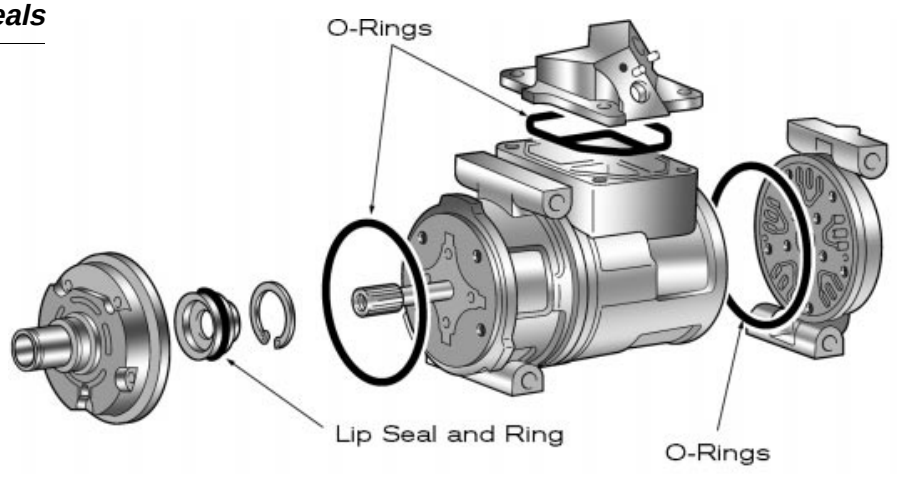

Fig. 4-15
L752f415

Component Replacement

- Observe torque specifications. On threaded fittings, use two wrenches. Hold the male fitting stationary with a wrench while rotating the female fitting (nut). Use a torque wrench for final tightening.
- Always handle O-rings carefully. Handle with oil-covered fingers or with a toothpick.
- Always install the receiver-drier last. Keep it sealed until the last moment to prevent the desiccant from absorbing moisture. It will become totally saturated with 10 minutes of exposure to humid air.

Refrigerant Recovery

- Old system refrigerant must be recovered before any repair requires opening the A/C system.
- Always start by connecting a manifold gauge set to the service fittings.
- Carefully measure the oil removed from the vehicle with the recovery machine.

Minimum Evacuation Time

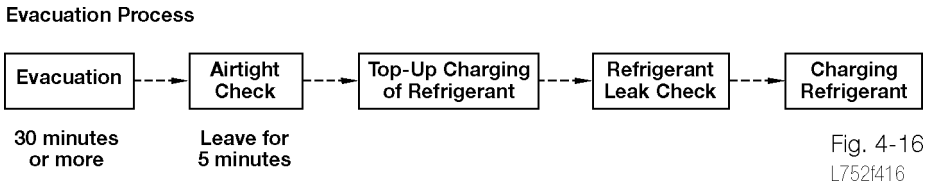

Fig. 4-16
L752f416

Flushing Precautions

Flushing products and procedures are not recommended by Lexus, and parts should be replaced if debris contamination is suspected. Flushing does not always remove all debris trapped in the system. Remaining debris can dislodge later and damage the compressor or block the expansion valve. Flushing a system using CFC-12 or HFC-134a refrigerant requires recovery of refrigerant used without allowing it to escape into the atmosphere.

Aftermarket flushing products, while sometimes effective, may not be fully tested to determine any long-term residual damage or corrosion to the compressor, condenser, expansion valve, evaporator, hoses, seals or other system components. Metal particles embedded in internal hose passages cannot always be easily dislodged during flushing as they were forced into the hose under high pressure. Debris within a "parallel flow-style" condenser is very difficult to flush out as the flushing agent can just bypass the debris. Flushing agents must be thoroughly removed from a system to minimize any residual effects such as oil dilution, corrosion, or other damage. Using refrigerant to flush requires recovery of all refrigerant used in the process.

Evacuation

After completing repairs, evacuate the system to remove moisture. This is important for system durability as moisture will form metal-destroying acids and create ice blockage at the expansion valve. **Evacuation** means applying a strong vacuum to the system. This has the effect of lowering the boiling temperature of water which will boil out of the system (vaporize) at room temperature. With a system vacuum of 29.5 inches Hg at sea level, water will boil at 59° F (15° C).

A vacuum pump will create 29.5 inches of vacuum. The correction for higher altitudes is to subtract one inch per 1,000 feet above sea level. Connect the A/C service hoses to both service ports and evacuate for at

least **30 minutes** before charging the system after repairs (newly installed systems = 10 minutes). This process will remove any moisture in the system. However, this will not remove moisture from a saturated receiver-drier which should be replaced.

After evacuation, close both valves on the manifold gauges set. Allow the system to remain under vacuum for a few minutes as a final leak check before charging.

Refrigerant System Lubrication

Mobile air-conditioning systems require lubrication for the compressor and the expansion valve and to prevent corrosion inside the system. This is supplied by a special lubricating oil which mixes with the refrigerant and travels throughout the system.

The oil coats the inside of each component, lubricates the bearings, rings and seals of the compressor and the moving parts of the expansion valve. The oil carries debris to the filter inside the receiver-drier. Different oils are formulated for the A/C system depending upon the type of compressor design and refrigerant used. Use only the recommended lubricant as specified in the *Vehicle Repair Manual*.

A/C System Lubricating Oils

Compressor Type	Refrigerant	Recommended Oil
Piston (reciprocating)	CFC-12	ND-6
Scroll or Rotary Through-Vane	CFC-12	ND-7
Piston (reciprocating)	HFC-134a	ND-8
Scroll or Rotary Through-Vane	HFC-134a	ND-9
Hybrid Electric	HFC-134a	ND-11

NOTE Do not mix different types of compressor oils together. Not all types are compatible. Drain oil from the recovery/recycling machine after each vehicle serviced.

Adding Oil After Repairs

When opening the A/C system for repairs, replace the correct quantity of lubricating oil into the system. After replacing a large component, the *Vehicle Repair Manual* specifies the exact amount of oil to recharge in addition to the amount removed during the recovery process. When replacing a compressor, remember that a new or remanufactured compressor usually has enough oil to fill the entire system. Therefore, you must compensate (add/remove) lubricant for the proper system amount.

NOTE Excess oil reduces the thermal efficiency of the system. The process of leak checking with dyes adds even more oil into the system.

Refrigerant/Oil Proportion in System

- When replacing parts in the system, some oil is lost and must be added.
- Replacement compressors have a full system amount of oil.

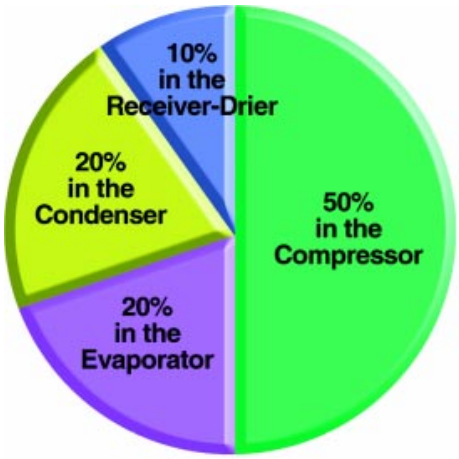

Fig. 4-17
L752f417

If no oil-retaining components are replaced, only add as much oil as was removed during the recovery process.

Add lubricating oil to the system after evacuation and before charging. Some charging stations include oil-charge capability, or a special bottle can used to meter the oil removed by the evacuation process.

Inline Filters

Aftermarket inline filters are commonly available in the market, however, they are not recommended by Lexus and certain precautions must be kept in mind.

- Inline filters can restrict flow and lessen performance or raise pressures in the system.
- Improperly installed or poor quality products can leak resulting in a comeback and possible system damage due to leakage and lubricant loss.
- Improperly installed or poor quality inline filters can fail over time and block the inlet port to the compressor or cause internal physical damage.
- Under-hood areas are limited in space and properly positioning a filter may be difficult.
- System hoses and pipes should not be cut or otherwise modified to prevent leakage or failure.

Performance Checking

The final step in a repair is to perform a final check of your work. This final performance check should include:

- Recheck belt tension with the gauge.
- Start vehicle, switch A/C ON, then recheck system pressures.
- Measure the dash vent outlet temperature. It should be 35° - 45° F (2° – 4° C).
- Observe the operation of the electric cooling fans.
- Observe, and if necessary, adjust the operation of the idle-up VSV circuit.

Recovery and Recycling Techniques

In order to allow vehicle and tool manufacturers to develop universal service equipment, there are principles and procedures for environmentally sensitive A/C repair. These standards have been created by the SAE in compliance with Section 609 of the Clean Air Act.

- **Recovery** refers to the containment of gases during use, processes and service.
- **Recycling** refines used refrigerant from mobile A/C systems to a purity standard for reuse.
- **Reclamation** refines used refrigerant from a variety of sources to a stricter-than-new standard.
- **Recharging** refers to charging an A/C system with refrigerant.
- **Underwriter's Laboratories (UL)** has developed testing procedures used to certify that recovery/recycling equipment meets the standards set by the SAE for automotive, light truck and RV use.

Recovery/recycling equipment all works essentially the same:

- **Oil separation** occurs in a heat exchanger and prevents hydraulic locking of the recovery machine compressor.
- **Moisture and acids** are trapped in a large-volume replaceable desiccant package.
- **Inline filter** (usually integrated with the desiccant) filters small particles from the refrigerant.
- **Moisture indicator** warns that moisture content exceeds allowable levels. This indicates the need to replace the desiccant.
- **Noncondensable gases** (air) settle by gravity to the top of the recovery tank. A gauge indicates when the air quantity exceeds the maximum and must be vented to the atmosphere.

Most recovery/recycling stations perform all these processes in a single pass. With a **one-pass** machine, any recovered refrigerant in the storage cylinder is recycled and immediately ready for reuse. Some machines do not fully recycle during the recovery process. **Two-pass** machines operate in a recycle mode only after recovering refrigerant from the vehicle.

NOTE

Some recycling machines cannot identify the many different types of refrigerant gases that are on the market. It is important to never mix refrigerants in a single machine.

With various refrigerants being used in the aftermarket, it is important to use a **refrigerant identifier** to verify it is safe to recharge or to recover the refrigerant.

- Different refrigerants cannot be separated and may produce a mixture that has different or unpredictable properties.
- Severe permanent damage to the recovery/recycling machine is likely if an incompatible refrigerant is recycled.

Equipment Operation

All recovery/recycling equipment works about the same way in order to meet SAE standards. Control locations may vary and some functions which are automated on some machines may be manually operated on others. Connection to the vehicle A/C system is always through pressure gauge set. The gauge set may be part of the recovery/recycling station.

A/C System Identification

CFC-12 Service Fittings	HFC-134a Service Fittings
Schraeder-type, all same size	SAE. Different sizes for High and Low pressure
High pressure: Smaller OD/Red Low pressure: Larger OD/Blue	

Noncondensables

With a one-pass machine, recycling is only necessary if the tank has been contaminated with excessive noncondensables or if the desiccant/filter is saturated.

At room temperature, refrigerant can be compressed or condensed into a liquid state. Air cannot. **Noncondensables** refer to gases in the recycling system that will not condense into a liquid. It is normal to see some amount of noncondensable gases after recycling. When the recycling process is complete, liquid refrigerant in the storage cylinder will settle to the bottom of the tank and any air will rise to the top where it can be vented from the PURGE fitting.

Based on the pressure/temperature characteristics of refrigerants versus air, a simple measurement can determine the presence of noncondensables in a room-temperature cylinder that has not been disturbed for at least 12 hours.

1. Measure the exact ambient temperature within 4 inches of the cylinder.
2. Measure the pressure of the gas in the cylinder.
3. Find the point where your pressure and temperature intersect on the chart:
   - If the point is below the black line, the refrigerant is safe to use.
   - If the point is above the black line, open the VENT or PURGE valve until the pressure falls to below the limit shown in the chart.

Noncondensables Chart

- Air is a noncondensable.
- Refer to text on this page to use chart.

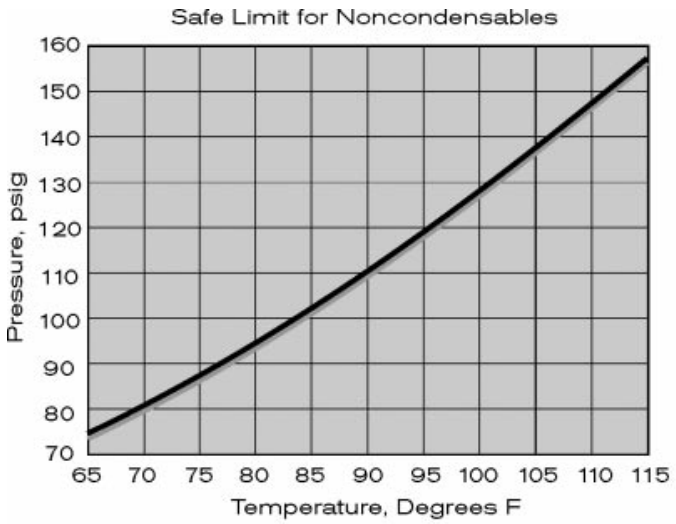

Fig. 4-18
L752f418

If the pressure cannot be brought within the limit shown, recycle the entire contents of the cylinder. Only cylinders of completely recycled refrigerant may be stored. Noncondensables may present a danger of tank corrosion or bursting under extreme conditions.

Recycling stations may include a double-needle pressure gauge that indicates noncondensables when the two needles are more than 10 psi apart. The gauge is only accurate if the refrigerant has been undisturbed for 12 hours. Some stations have an automatic purge function to vent condensables.

A recovery/recycling machine that continually gives indications of moisture or noncondensables should have a new filter-drier installed and then checked for leaks.

Storage Cylinders

Refrigerant cylinders ("tanks") are designed to only hold a specific gas and have unique fittings for each gas to prevent contamination.

- CFC-12 cylinders are white or off-white
- HFC-134a cylinders are pale blue

The U.S. Department of Transportation (DOT) has developed safety standards for heavy-duty service cylinders that may be charged with recycled refrigerant. They are made of very thick gauge steel, painted on the inside for corrosion protection and include an over-pressure safety vent. These cylinders must be returned to the manufacturer for testing every five years. They are always marked with "DOT 4BA" or "DOT 4BW," the date of manufacture and the maximum allowable content weight (WC-XX).

Service cylinders have three fittings:

1. **Liquid** fitting with a blue shut-off valve connects to a siphon tube that draws refrigerant from the bottom of the cylinder.
2. **Gas** fitting has a red valve and is connected to the top of the tank to add or remove gas from the cylinder.
3. **Vent** fitting without a control valve allows venting of non condensables from the top of the tank.

Cap all fittings to prevent leakage when the cylinder is not used. New service cylinders are shipped with a charge of pure nitrogen. This must be vented to the atmosphere before using. Empty or new cylinders must be evacuated for at least five minutes before using to maintain refrigerant purity.

New refrigerant is shipped in **disposable** tanks of various sizes. These tanks should not be refilled or transported without proper packaging. Disposable tanks should only be filled with absolutely pure ("virgin") refrigerant which meets extremely tight tolerances for moisture and noncondensable content.

Disposable cylinders have a single fitting connected to the top of the tank. Most charging stations work best with liquid refrigerant so the tank must mount upside down to place the fitting at the bottom. When a disposable container is empty:

- Recover any remaining gases into a recovery/recycling station.
- Close the service valve on the cylinder.
- Mark the cylinder "EMPTY" and dispose properly.

WORKSHEET 4-1 (ON-CAR)
Refrigerant Identification

Vehicle	Year/Prod. Date	Engine	Transmission

Worksheet Objectives:

After completing this worksheet you will be able to accurately operate the Neutronics Refrigerant tester which will allow you to identify contaminants in refrigerants.

Background:

Identifying the refrigerant type prevents storage contamination and potential damage to the A/C system and to recharging and recycling equipment.

Tools and Equipment:

- Neutronics Diagnostic Tool
- Lexus Vehicle
- Safety Equipment

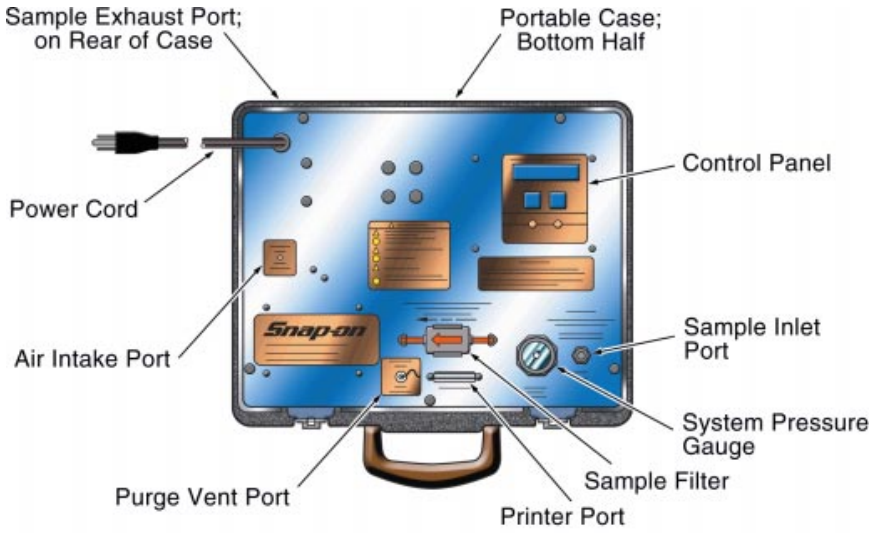

Section 1

1. Open the Neutronics case and inspect the sample filter for discoloration or red spots anywhere on the outside diameter of the filter element. If any problems are found with this filter it must be replaced.

2. Select the HFC-134a sample hose from the storage panel in the case cover. Install the sample hose onto the inlet port of the test instrument **(Finger tighten only).**

3. Inspect the air intake port, the sample exhaust port, and the case vent ports for any obstructions.

4. Verify that the purge vent cap is securely installed onto the port.

5. Locate and identify the low pressure fitting on the test vehicle.

   Note: Do not connect the identifier to the vehicle yet.

6. Connect the power cord to 110VAC and wait. The system display should read, **"Cold."**

7. During the warm-up period, the system allows the operator to change the local elevation calibration.

8. To change the elevation setting on the tester, Press the **"A"** and **"B"** buttons simultaneously. The display should read "ELE", then a number. This is the factory setting. Press the **"A"** and **"B"** buttons separately to increase or decrease the elevation setting.

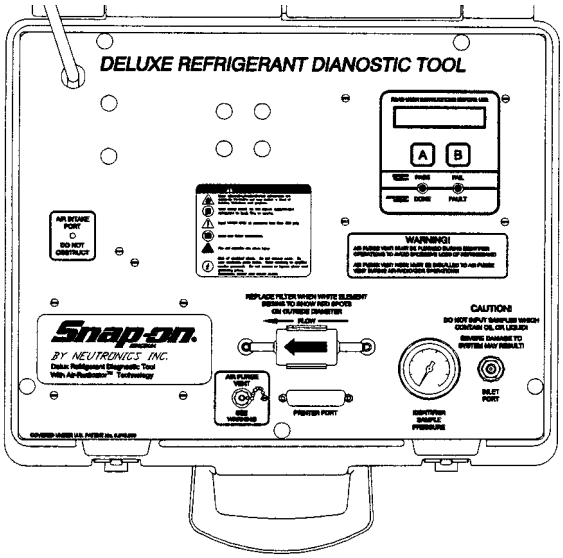

9. Once the correct elevation is set, allow the instrument to sit for 20 seconds and the elevation value will be accepted. The tester will return to the warm-up cycle.

10. After the warm-up cycle the tester will self calibrate at which time the display will read: **"READY:CON.HOSE, PRESS A TO START"** — the green LED will be flashing.

11. Connect the service end of the test hose to the low pressure service fitting, then open the valve.

12. Check the pressure on the tester gauge. It should read approximately 10 psig.

13. Press the **"A"** button to begin testing.

    Note: For optimal results it is recommended that the tester be allowed to run an additional five minutes during the warm-up cycle before pressing the **"A"** button to begin the test. This additional time allows the instrument to stabilize.

14. The tester display should read, **"GAS SAMPLING IN PROGRESS."**

15. Once the sampling is complete, the unit will display the results.

    a. If a printer is connected, press the **"A"** button to print the results.

    b. Press the **"B"** button to exit if no air is present or to purge any air present in the system.

    c. Record your test results in the form below:

Printout from unit parallel port

REFRIGERANT IDENTIFIER

Refrigerant Analysis

Refrigerant HFC-134a =

Refrigerant R-12 =

Refrigerant R-22 =

Hydrocarbons =

Conclusion: >>PASS<<

Air: =

Date:

Technician:

Car Model:

VIN:

Note: This printout can be obtained if you have access to a printer with a parallel port. It is useful when contaminated refrigerant is found in a customer vehicle and proof is required.

Section 2
Air Purging Operation

16. If the test unit determines there is air in the system the unit will prompt the operator. At this point, press **"A"** to begin system purging and **"B"** to cancel purging.

17. Adjust the purge limit by pressing "**B**" when prompted by the equipment display. Pressing "**A**" or "**B**" adjusts the purge limit up or down, respectively.

18. After reaching the desired purge limit, allow the system to adjust for 15 seconds without pressing any buttons.

19. The test equipment will automatically store the purge setting.

Purge Cycle

20. When the tester is ready to purge you will see the message, **“REMOVE PURGE CAP, CON. HOSE, PRS.A.”**

21. Remove the purge cap from the purge vent port.

22. Install the purge vent hose onto the vent and point the free end of the hose away from the tester.

23. After connecting the hose, press the **“A”** button to begin the process.

24. The display will read, **“NOW AIR IS XX.X%, PURGING TO XX.X%.”** Purge times will vary depending on applications. For example, a 50-pound storage cylinder that is 50 percent liquid will require approximately one hour to purge. The purge process can be stopped at any time by pressing buttons **“A”** and **“B”** simultaneously.

25. When the process is complete the display will read, **“DONE, AIR IS X.X%. PRESS ‘B’ TO EXIT.”** The green LED will flash.

Error Codes

26. Refer to the manufacturer’s operating manual to describe the meaning of the following error codes:

    ERR.1 _____

    ERR.2 _____

    ERR.3 _____

27. Return the station to its original condition.

Instructor Sign Off: _____

Refrigerant Identification

Name: _____ Date: _____

Check each category after participating in the classroom discussion and completing this sheet as you are completing Worksheet 4-1 using the Refrigerant Identification worksheet in the classroom. Ask the instructor if you have any questions regarding the topics provided below:

I have questions

I know I can

Topic			Comment
Purpose of Refrigerant Identification			
Set up and Calibration			
Connecting hose to vehicle			
Reading % HFC-134a			
Reading % Air			
Air Purging			

Notes

WORKSHEET 4-2 (ON-CAR)
Touch and Feel Diagnosis

Vehicle	Year/Prod. Date	Engine	Transmission

Worksheet Objectives:

Given this worksheet and a Lexus vehicle, you will evaluate a HVAC system by touching various components and checking component temperatures.

Background:

The high- and low-pressure sides of the HVAC system provide distinct temperature differences. You can get a pretty good idea of the performance of an A/C system by observing the temperatures of the various lines and components. Knowing these differences can help you verify system operation and diagnose malfunctions in the A/C system.

Tools and Equipment:

- This worksheet
- Lexus vehicle

1. In the following illustration, the areas in **blue** are typically much cooler than those in **red**. What is the basic reason for this difference?

_____

_____

Basic Refrigeration System Schematic

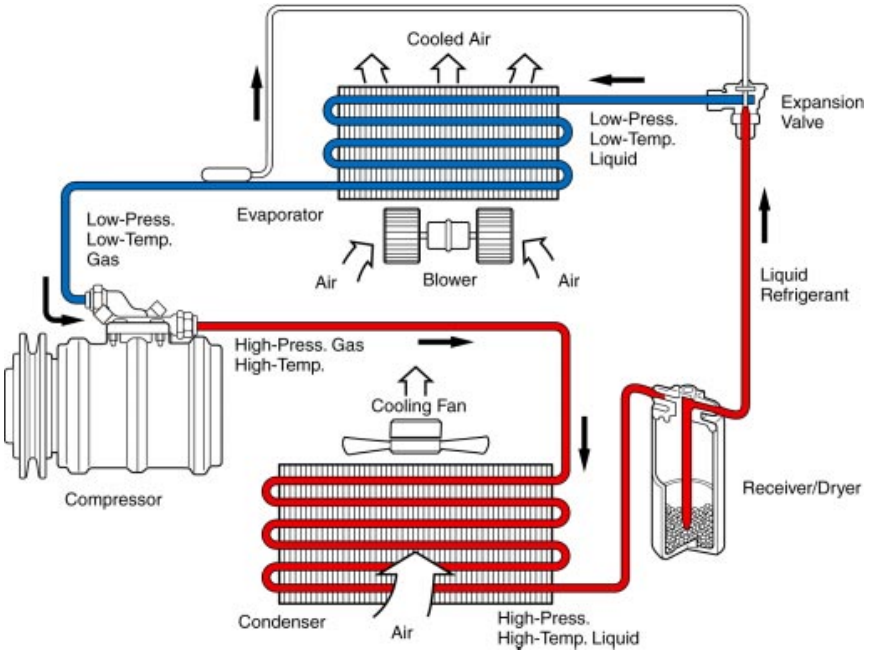

Note: Sub-cool Condenser models have filter-drier built into Modulator portion of condenser end tank.

2. A sight glass in the A/C system, while not as accurate as pressure gauge readings, can indicate if the system is fully _____.

   Note: The sight glass is not used as much because it is no longer an accurate indicator of the correct amount of refrigerant in the system.

3. Start engine and bring to operating temperature, then switch the A/C system ON.

4. Wait a few minutes, then touch all the refrigerant lines on the low side of the system.

   They should feel _____.
   CAUTION: Observe personal safety. Be careful of rotating engine parts.

5. Describe the temperature of the refrigerant line leading from the compressor to the condenser.

   _____

   Note: If the low- and high-side temperatures are okay, then the compressor is operating normally.

6. Using the A/C switch on the control panel, cycle the compressor ON and OFF and verify the compressor clutch is engaging and disengaging.

   A/C switch ON and compressor clutch engaged: Yes / No

   A/C switch OFF and compressor clutch disengaged: Yes / No

7. In a normal operating system, the receiver-drier should feel

   _____ to the touch.

8. What is your diagnosis if a receiver-drier is cool to the touch on the expansion valve side of the component?

   _____

9. Diagnose this vehicle:

   The A/C system is not cooling properly. There is frost on the expansion valve and on the line leading to the expansion valve. What is your diagnosis?

   _____

Vehicle Interior Performance Test

10. Adjust the temperature setting on the control panel to maximum cooling and full recirculation. Set the blower speed to “High” and close the doors and windows.

11. Insert a thermometer into the center vent and measure the air temperature.

    a. After a minute or two, record the reading. _____ °F.

    b. What temperature should it be? _____ °F.

12. Switch the blower speed to “Low” and record any change in temperature.

    _____ (temperature may drop)

    Why the temperature change?

    _____

13. Increase the engine speed to 1500 rpm and record any change in the temperature.

    _____ (temperature may drop)

    Why the temperature change?

    _____

Instructor Sign Off: _____

Notes

Touch and Feel Diagnosis

Name: _____ Date: _____

Review this sheet as you are completing Worksheet 4-2 for Touch and Feel Diagnosis. Check each category after participating in the classroom discussion and completing the worksheet in the shop. Ask the instructor if you have any questions regarding the topics provided below.

I have questions

I know I can

Topic			Comment
Low and High Sides of System			
Component identification			
Location of Sight Glass			
Sight Glass Appearance			
Checking Temperature Output			
Clutch Cycling			

Notes

WORKSHEET 4-3 (ON-BENCH)
Compressor Clutch Replacement
(Instructor's Copy)

Vehicle	Year/Prod. Date	Engine	Transmission

Worksheet Objectives:

Given a *Vehicle Repair Manual*, this worksheet and other technical publications, you will correctly remove and replace the A/C compressor clutch on a Lexus vehicle.

Background:

The compressor clutch is an electromagnetic device to connect the drive pulley to the compressor shaft. When the shaft rotates, refrigerant circulates through the system.

Tools and Equipment:

- *Vehicle Repair Manual* (TIS)
- SST No. 07112-76060
- SST No. 07112-211203
- A/C compressor
- Dial Indicator
- Normal hand tools

Section 1

1. What page in the *Vehicle Repair Manual* describes the R&R procedure? _____

2. Approximately how much torque will it take to remove the shaft bolt? _____

3. Is the pressure plate shimmed? _____

4. What kind of hammer is suggested to remove the pressure plate from the shaft?

   _____

5. After removing the pressure plate, there is a connector mounted to one part of the unit in the following illustration. What is the name of the part this connector is attached to?

   _____

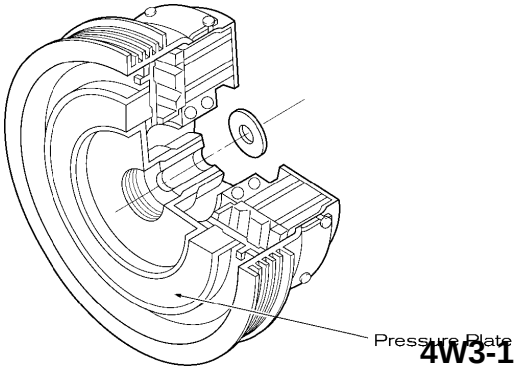

6. Remove all parts from the compressor shaft.

7. How many “Snap Rings” are there to be removed in the complete process? _____

Reassemble Clutch

8. What direction (up or down) should the beveled side of the snap ring face? _____

9. Reassemble the components onto the compressor shaft.

10. Set up the dial indicator to inspect the magnetic clutch.

11. What is the “Standard Clearance” between the clutch and pressure plate?

    _____

12. List the available shim sizes to adjust the gap:

    _____

    _____

    _____

    What is your measurement results? _____

13. What page in the *Vehicle Repair Manual* did you find this information? _____

Answer the following diagnostic questions based on the information in your *Vehicle Repair Manual* and the Reference section in your *Technician Handbook*.

14. There is an attempt to energize the A/C compressor. After switching the A/C ON, the clutch does not engage. In addition, the compressor clutch does not produce a “clicking” sound. What two items would you check first?

    _____ _____

15. You have confirmed source voltage to the compressor connector and decide to check the resistance of the stator. What is the resistance specification for the stator?

    _____

16. If there is no source voltage at the stator connector and the stator resistance is okay, jump the connector to the coil to bypass the _____.

17. After “jumpering” (bypass the A/C switch), the compressor clutch engages and the compressor runs quietly. What is a reasonable conclusion based on these findings?

    _____

18. What is a reasonable timeframe to run this compressor (circuit bypassed) for testing purposes?

    _____

19. Explain the reason for your answer in #18.

    _____

    _____

    _____

Instructor Sign Off: _____

Notes

Compressor Clutch Replacement

Name: _____ Date: _____

Check each category after participating in the classroom discussion and completing this sheet as you are completing Worksheet 4-3 using the Compressor Clutch Replacement worksheet in the shop. Ask the instructor if you have any questions regarding the topics provided below:

I have questions

I know I can

Topic			Comment
Purpose of Clutch Shims			
Identification of Compressor Clutch Parts			
Removing Clutch using SSTs			
Dial Indicator Set-Up			
Clutch Gap and Shim Thickness			
Clutch Coil Resistance			

Notes

WORKSHEET 4-4 (ON-CAR)
HFC-134a Recovery

Vehicle	Year/Prod. Date	Engine	Transmission

Worksheet Objectives:

Given this worksheet, a Lexus vehicle, a *Vehicle Repair Manual* and a Refrigerant Recovery Machine, you will operate the A/C recovery/recharging machines available at this station.

Background:

The setup and use of recovery and recycling machines will vary from dealership to dealership. This worksheet emphasizes the importance of proper preparation and equipment safety issues. It is important to understand the operation differences for each machine. Proper care and maintenance of any machine will prevent comebacks and increase customer satisfaction. One person at your dealership should be responsible for maintaining the recycling and recovery equipment.

Tools and Equipment:

- Lexus Vehicle
- *Vehicle Repair Manual*
- Refrigerant Recovery Equipment
- Safety Glasses

Section 1

1. Identify the make and model of the HFC-134a recycling/recovery machine at this station.

   Brand _____ **Model** _____

2. Check the oil level in the vacuum pump assembly.

   _____ **Okay**

3. When a new tank is placed into service, a small amount of refrigerant must be added to the new tank. Approximately how much refrigerant should be added before using the new tank?

   _____

   Note: All of the above setup procedures have been performed for you.

4. Drain the oil catch bottle before recovery. Where is the oil catch bottle?

   _____

   _____ **Done**

   Note: Verify the oil catch bottle is empty. Place it back into its holder before starting.

5. Locate and identify the low side and high side A/C system fittings in the vehicle. Connect the appropriate HFC-134a hose fittings to these ports.

   _____ **Done**

Section 2
Recovery Procedures:

Note: Always check the A/C system with a refrigerant identifier test before recovery.
Verify there is sufficient refrigerant in the supply tank.

6. Check the sight glass or moisture indicator color on the recovery machine to determine if there is excessive moisture in the system. If the machine has a moisture indicator:

   Dry _____ Wet _____ (Check one)

   If wet, notify your instructor to change the filter

7. Check the vacuum pump oil level

   Okay / Not Okay (Circle one)

8. Engine OFF.

9. Locate and record the following information from the A/C label in the engine compartment:

   a. Charge amount: _____ lbs.

   b. Lubrication type: _____

10. What is the ambient temperature? _____ °F

11. Connect the high and low pressure hoses from the recovery machine onto the vehicle.

    Note: Verify the fitting valves are closed before connecting to the vehicle A/C system valves.

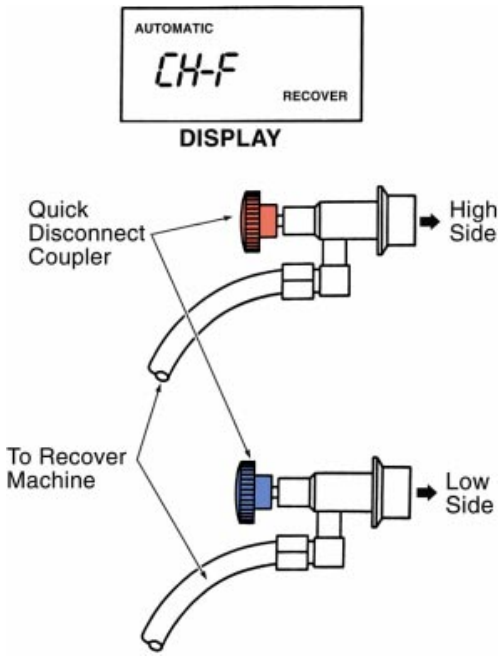

12. Before starting the recovery process, determine system performance as follows:

    a. Start engine and warm up to operating temperature. Set the system to maximum cold, then check the temperature at the center vent.

       What is the temperature of the system? _____

       Note: See TIS for Engine Speed and vehicle door opening position.

    b. Is this temperature an acceptable level of performance? Yes / No (Circle one)

    c. Observe and record the refrigerant pressures on both gauges. The following illustration shows “normal” gauge readings.

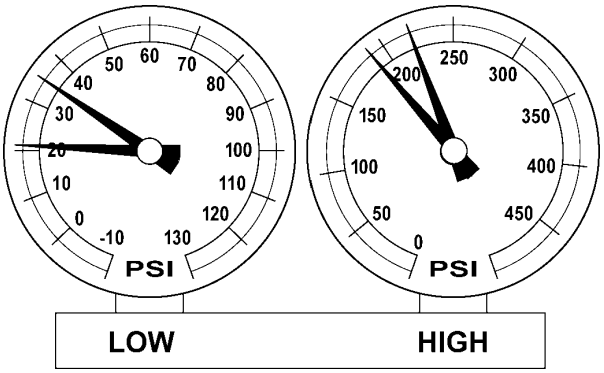

Low pressure gauge _____ psi (21-35)

High pressure gauge _____ psi (190-220)

d. Is this vehicle operating normally? Yes / No (Circle one)

e. What is your diagnosis of this system at this point?

_____

13. Follow the directions in the *Equipment Operating Man*ual and recover the refrigerant from this vehicle.

Note: Verify the refrigerant valves on the recovery machine are closed.

Do not disturb the recovery machine or the refrigerant supply tank during the recovery/recycling/recharging operation as this could upset the charge amount.

_____ **Done**

14. How much refrigerant did you recover? _____

15. How does this compare with the amount on the label? _____

16. How much oil was removed during refrigerant recovery?" _____

What type and how much oil do you need to put back in the system? _____

Under what conditions do you add oil to the system during this procedure?_____

17. Remove moisture from the system with a vacuum pump. Evacuate at 29.5 in. Hg for approximately five minutes (See note).

_____ **Done**

Note: If the system does not hold a vacuum there is a leak in the system.
This evacuation process is important. It normally takes 30-60 minutes to complete.

18. Does the system hold a vacuum after five minutes? Yes / No (Circle one)

19. Follow the instructions for recharging and begin that process. Install the specified amount of refrigerant into the system as you removed. Refer to the vehicle label or the *Vehicle Repair Manual* for the proper amount.

How much refrigerant are you going to charge? _____

20. Do the A/C Pressure Gauges display approximately the same amount when you started.

_____ **Done**

21. Return the workstation to its original condition.

Instructor Sign Off: _____

HFC-134a Recovery

Name: _____ Date: _____

Check each category after participating in the classroom discussion and completing this sheet as you are completing Worksheet 4-4 using the HFC-134a Recovery worksheet in the shop. Ask the instructor if you have any questions regarding the topics provided below:

Topic	I have questions	I know I can	Comment
Importance of Refrigerant Recovery			
Identification of parts of Recovery Station			
Location of Vacuum Pump and Oil Level			
Low and High Pressure Hoses and Control Valves			
Location and use of Oil Drain Bottle and Replenishment of Oil			
Recovery Process from Vehicle			
Evacuation Process			
Recharging Refrigerant to Vehicle			
Recovering Charge Station Hoses after use			

Notes

WORKSHEET 4-5 (ON-CAR/IN-CLASS)
TIS Information/Leak Check

Vehicle	Year/Prod. Date	Engine	Transmission

Worksheet Objectives:

Use this worksheet as a guide to search for information on the TIS and use that information to check for refrigerant leaks in a Lexus vehicle.

Background:

Refrigerant loss decreases the efficiency of the A/C system. A leak test will help determine the location of the leak.

Tools and Equipment:

- *Vehicle Repair Manual*
- TIS Machine
- Leak Detector

Section 1:

1. Access the TIS main screen menu.
2. Select “All Models” and “All Years”.
3. Select “Service Bulletins”, then “Search”.
4. Select “Heating & Air Conditioning”, then “Find”.
5. Select and print the following TSIBs:

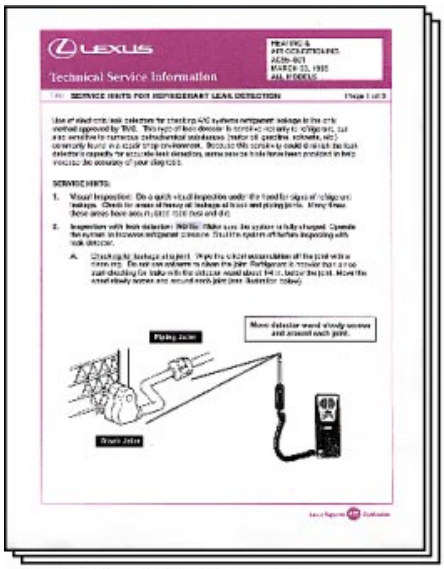

TSIB AC001-95 (3 pages)

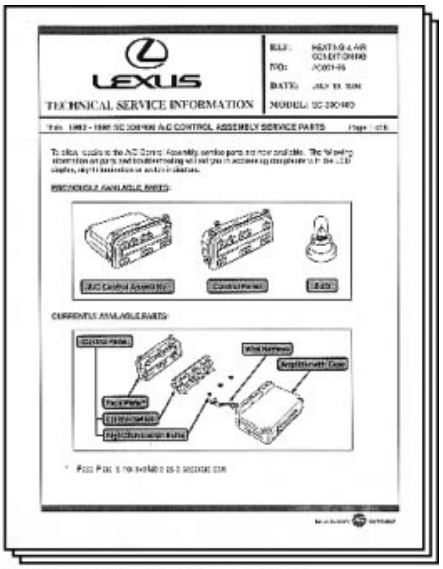

TSIB AC002-96 (8 pages)

Section 2 (On-Car)

6. Use TSIB AC001-95 to perform a refrigerant leak check on a vehicle. Before beginning, take the leak detector to the Recovery/Recycling Machine and check it for leaks.

   Leak check performed per TSIB AC001-95: _____

7. List problems you discover as you complete the TSIB concerning this type of leak detection.

   _____

   _____

   _____

   _____

8. Leak detection methods have been controversial since the appearance of various recycling machines. List the problems regarding other types of leak detection.

Leak Detection Type	Disadvantages
Dye in refrigerant	
Flame tester	

Section 3 (In-Class)

9. Refer to TSIB AC002-96 and answer the following questions:

   a. What A/C control assembly parts were previously available?

   _____

   _____

   b. If the A/C control panel Night Illumination feature does not work, what component is at fault?

      1. Control panel
      2. Printed circuit
      3. Bulb
      4. Switch

   c. To check continuity of the “Fresh/Recirc” switch on the A/C control assembly, what terminals do you connect to an ohmmeter?

   _____

Instructor Sign Off: _____

TIS Information/Leak Check

Name: _____ Date: _____

Check each category after participating in the classroom discussion and completing this sheet as you are completing Worksheet 4-5 using the TIS Information/Leak Check worksheet in the shop. Ask the instructor if you have any questions regarding the topics provided below:

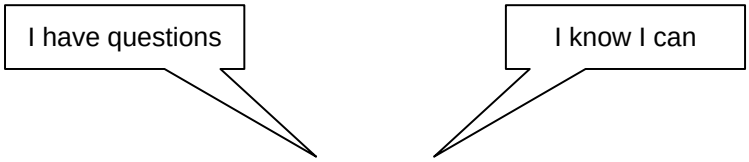

Topic			Comment
Purpose of TIS terminal			
Locating TSIB on Leak Checking			
Using the leak detector			

Notes

WORKSHEET 4-6 (IN-CLASS)
A/C Pressure Gauge Diagnosis

Vehicle	Year/Prod. Date	Engine	Transmission

Worksheet Objectives:

Given the *Technician Handbook* and TIS you will evaluate and diagnose a simulated manifold gauge condition.

Background:

The A/C pressure gauges provide a snapshot of the operating condition of the A/C system. These readings can help diagnose malfunctions in the system.

Tools and Equipment:

- None

1. What are typical High-Pressure and Low-Pressure gauge readings?

   Low _____ psi High _____ psi

   Note: As you review the following gauge readings, keep in mind the operating conditions of the system and why these conditions cause these gauge readings.

2. Observe the following pressure gauge reading (assume ambient temperature is 80°F):

Low: Between 21-35

High: Between 190-220

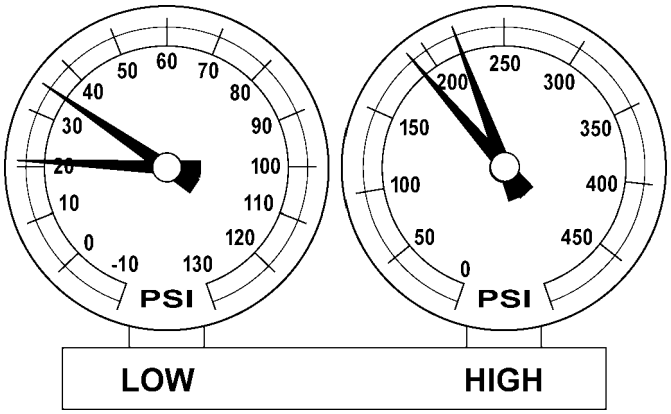

What is the condition of the system? (See **Normal System Refrigerant Pressure** chart in Student Handbook, Section 4). _____

3. The customer complains of poor cooling or no cooling at all and both pressure gauges are low.

   What is your diagnosis? _____

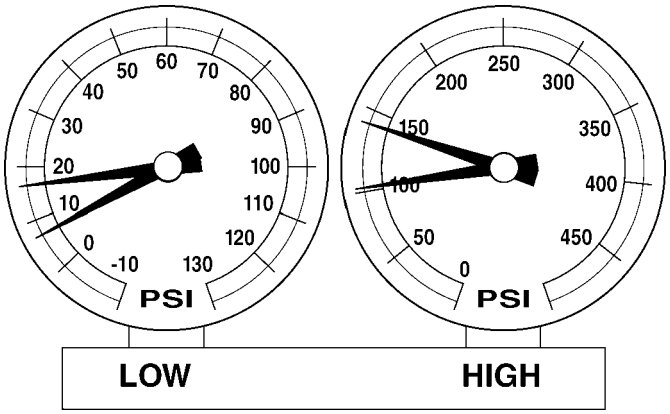

4. The customer complains of poor or no cooling.

   What is your diagnosis? _____

Here are the symptoms:

- *Low-side pressure is too high*
- *High-side pressure is too low*

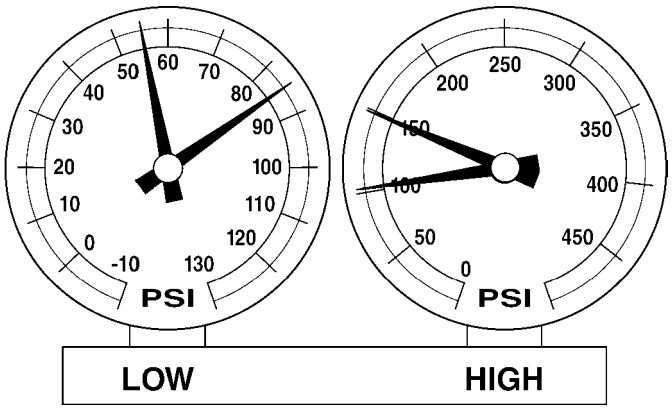

5. What is the system condition in this example?

_____

Hint: Gauge needles are bouncing and cooling is periodic.

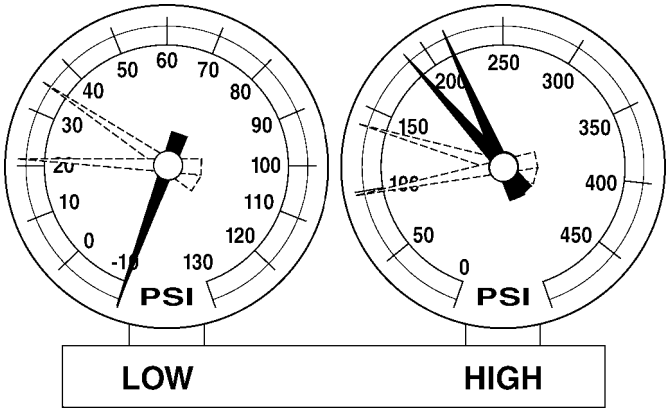

6. In this example, both pressures are high. What are two likely causes?

Symptom #1: _____

Symptom #2: _____

Hint: Different components are involved.

Here are the symptoms:
- *Low-side pressure is too high*
- *High-side pressure is too high*
- *No air bubbles are visible in the sight glass*

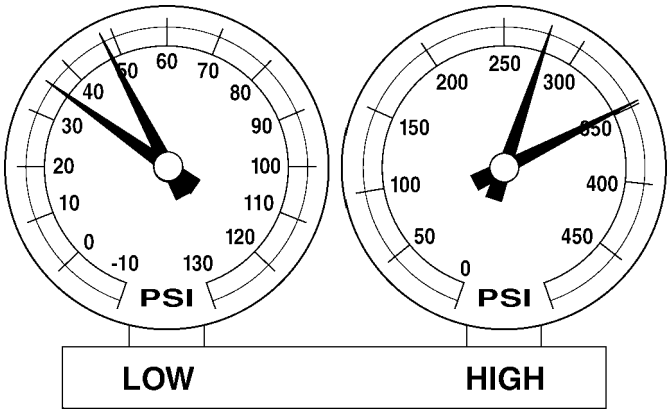

7. Describe how the above gauge readings might be related to a previous ineffective repair.

_____

_____

_____

8. The following gauge readings are most common. The refrigerant level is to specification. The complaint is poor or no cooling.

   Condition: _____

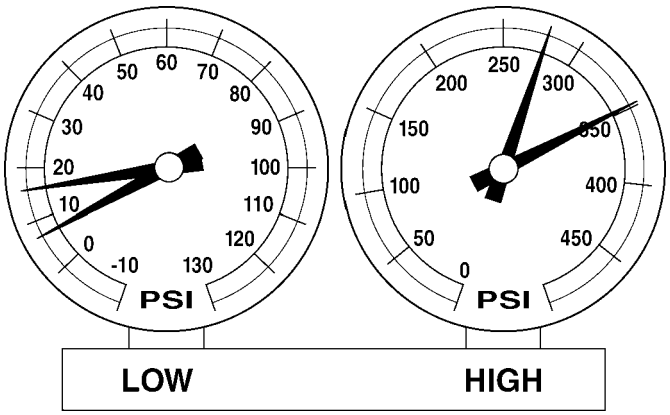

9. Explain the conditions of the problem in question #8.

_____

_____

_____

Summary:

As shown in these examples, there are logical reasons for certain gauge readings. However, there are some readings caused by more than one component or situation. Through the process of elimination, the components can be tested to determine the cause of the malfunction.

Review Questions:

Fill in the blanks in the following statements:

1. The low-pressure side sometimes draws a vacuum. List some reasons to explain this:

   _____

   _____

2. The low-side pressure is high. List three causes:

   a. _____

   b. _____

   c. _____

3. The high-side pressures are abnormally high. List three causes:

   a. _____

   b. _____

   c. _____

4. What are normal pressures in an A/C system?

   Low side: _____ psi

   High side: _____ psi

Instructor Sign Off: _____

Notes

A/C Pressure Gauge Diagnosis

Name: _____ Date: _____

Check each category after participating in the classroom discussion and completing this sheet as you are completing Worksheet 4-6 using the A/C Pressure Gauge Diagnosis worksheet in the shop. Ask the instructor if you have any questions regarding the topics provided below:

I have questions

I know I can

Topic			Comment
Identification of Low and High Side			
Connecting the gauges Low and High Side			
Identify normal gauge readings			
Identify low or high gauge readings			
Identify moisture in system			
Identify possible damaged compressor			

Notes

Section 5

A/C System Controls

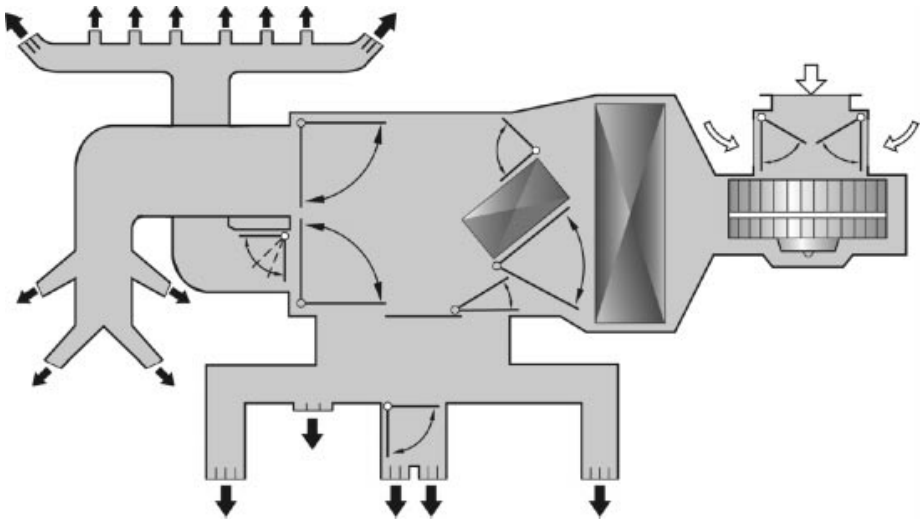

Lesson Objectives

1. Locate and verify the operation of the air inlet control system.
2. Locate and verify the operation of the temperature control system.
3. Locate and verify the operation of the air distribution control system.

Temperature Control

The heating, ventilation and air-conditioning system depends on the engine as a source of heat and energy to drive the system that removes the heat. The combustion process supplies the heat needed to warm the vehicle interior. The engine's output powers the A/C compressor to cool the vehicle interior.

At normal operating temperatures, the engine coolant is about 220° F (105° C) due to the cooling system pressure cap, thermostat and the engine cooling fan. When the system is ON, the A/C evaporator operates at a constant temperature of 32° F (0° C) based on the characteristics of the refrigerant. Beyond this, there are driver controls to regulate the amount of heat added to or from the interior in order to achieve a comfortable interior temperature.

Temperature Control System

Main controls in system.

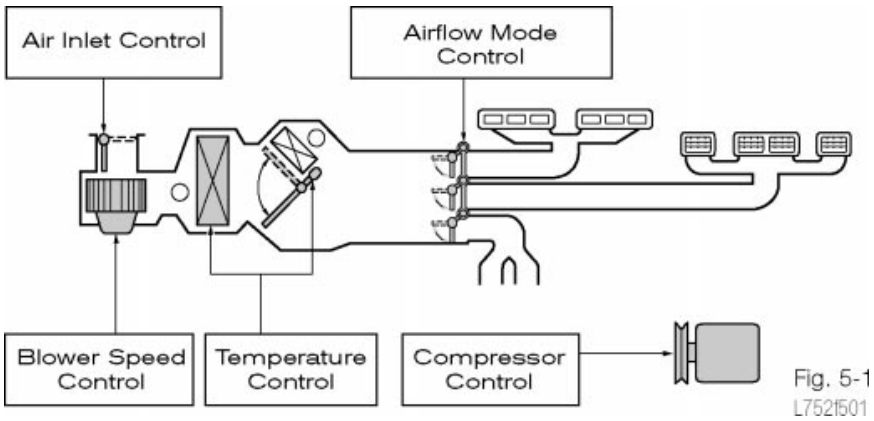

Fig. 5-1
L7521501

Heater Control Valve

In simple systems, the heater control valve may be the only adjustable temperature control. It controls the flow of hot coolant through the heater core (heat exchanger) to increase the air temperature going to the interior.

Function of Heater Control Valve

- Allows hot coolant into heater core.
- Normally only closed at maximum cold setting.

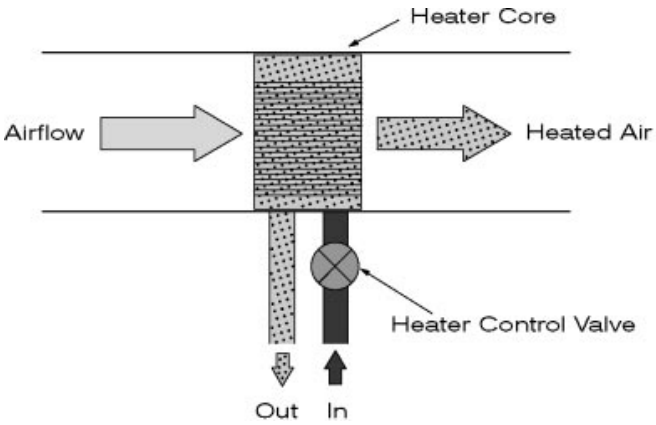

Fig. 5-2
L7521502

A cable-operated lever on the heater control valve controls the flow of hot coolant through the heater core. On current Lexus vehicles, the valve is completely closed when the system requires maximum cool air. At all other times, the heater valve is fully open. Heat to the interior is controlled by controlling air flow.

Cable-Operated Heater Control Valve

- Operated by temperature control knob or lever.
- Cable adjustment is important.

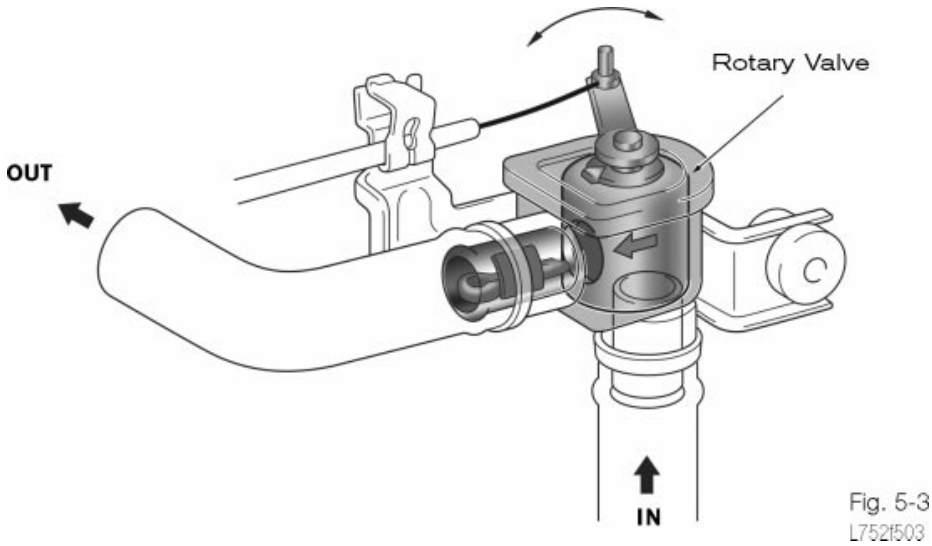

Fig. 5-3
L752f503

Some systems use a variable vacuum control to operate the valve. A vacuum solenoid valve changes the vacuum applied to the diaphragm which in turn controls the flow of coolant through the water (heater) valve. Current Lexus vehicles use a servo-motor (DC motor) to control the heater valve.

Vacuum-Operated Heater Control Valve

- Valve opened by vacuum diaphragm controlled by a vacuum solenoid valve.

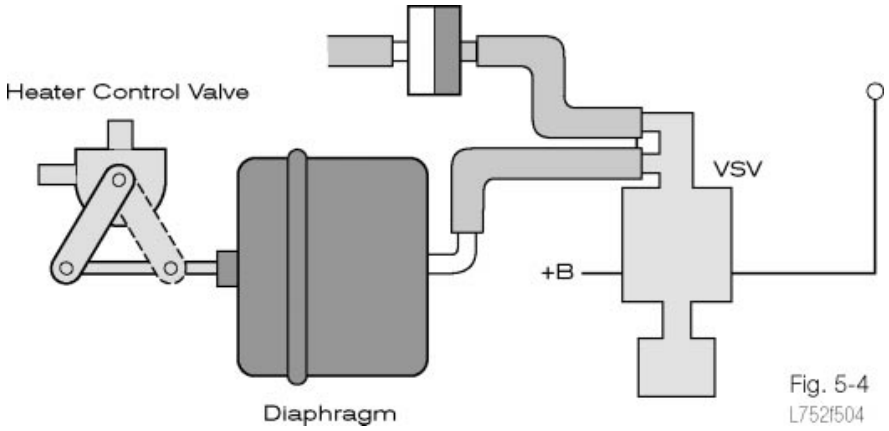

Fig. 5-4
L752f504

Both manual and vacuum-operated heater control valves respond slowly to changes due to the thermal inertia of liquids, that is, the resistance of the coolant in the heater core to temperature changes.

Heater control valve is usually open during A/C operation except at coldest temperature settings (67° F or below).

Air Mix Temperature Control

Air is more responsive to temperature changes than a liquid. To take advantage of this, some current air-distribution systems continuously circulate hot coolant through the heater core. In this type of system, when heat is needed, a controlled amount of air is allowed to pass through the heater core. The heated air mixes with unheated air that bypasses the heater core to achieve a comfortable mix. Since air has much less thermal inertia than liquid, this system provides a very responsive, yet stable adjustment of the air temperature.

Air Mix Temperature Control

Damper is moved by cable or electric servo-motor.

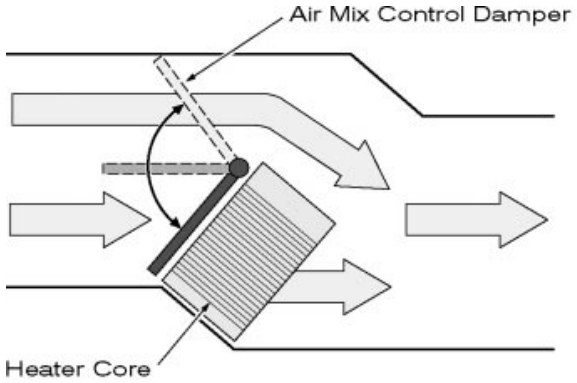

Fig. 5-5
L752f505

A movable door or damper called the **blend door** inside the blower housing controls the air through and around the heater core and/or A/C evaporator. The amount of air mix is controlled by either a cable or a variable vacuum signal from a control panel.

Lexus vehicles use an electric motor to control the blend door. The **air mix servo-motor** thus regulates the temperature depending on a variable signal from an electric control (variable resistor) or by a signal generated by another device. Additional information on servo-motors is in Section 6.

Air Mix Servo-Motor

- Moves air mix damper or blend door.
- Also used for air inlet damper.

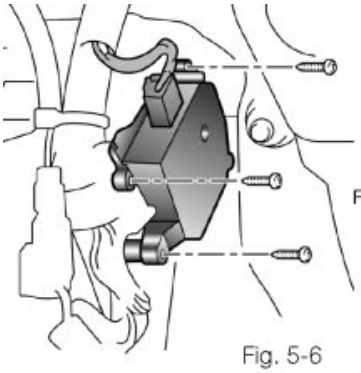

Fig. 5-6
L752f506

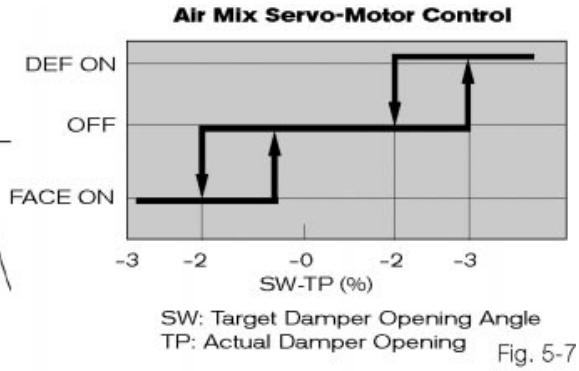

Fig. 5-7
L752f507

The servo-motor may have an integral (built-in) variable resistor that provides a signal to confirm the current position of the blend door. Later, we will discuss why this function is important in automatic A/C systems.

Air mix temperature control systems still use a heater control valve, but it is usually open under all conditions except maximum cooling. In other words, the heater is at maximum hot unless the temperature control is set to the coldest range.

Blend Door

- Shown in heat position.
- Dotted line is cool position.
- Can be in between or blended.

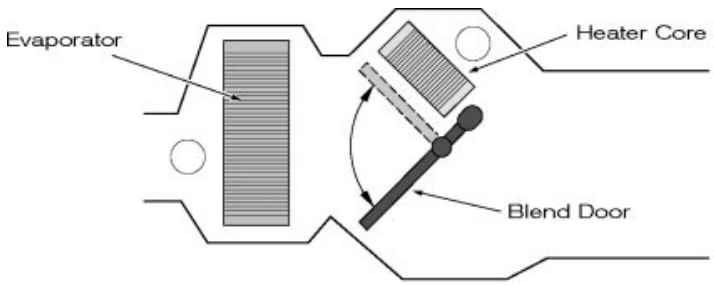

Fig. 5-8
L752f508

Blower Speed Control

The fan that circulates interior air is controlled by the driver to regulate temperature and airflow. Fan speed is usually variable in steps by controlling the source voltage to the fan motor through a series resistor.

NOTE

When several resistors are connected in series, each resistor will drop some portion of the total source voltage, and the total of all voltage drops equals the source voltage.

Terminal 1 of the blower motor is supplied by source voltage by the heater relay whenever the blower switch is ON, but the motor connection to ground passes through a string of resistors (typically three) called a series resistor. The multiple position fan switch provides a connection to ground from the various points in the series portion of the circuit. Increasing resistance in the ground leg of the circuit limits current flow to reduce fan speed while less resistance raises fan speed.

At low fan speeds, the blower switch does not provide a ground path. All of the series resistors are used to reduce the source voltage to the motor. At the HI speed position, the blower switch bypasses all of the resistors to provide full source voltage to the motor.

Lexus vehicles have push buttons for fan speed selection instead of a conventional rotary switch. The large size of a rotary switch means it can handle the relatively high current of the blower fan circuit directly. With smaller push buttons, a relay isolates the switches from the high current fan circuit.

NOTE

See figure 3-17 on page 3-20.

Blower Fan Speed Circuit

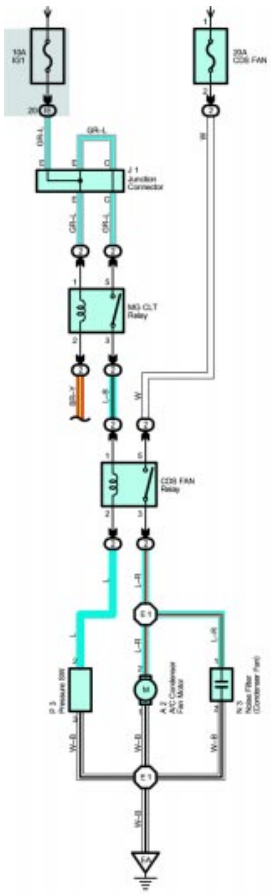

Fig. 5-9
L752f509

Typically, three or four speeds are available for blower fan operation (depending on the number of elements in the series resistor). A specific blower speed is provided for each switch position while the highest speed bypasses the resistor.

Some late model vehicles use a large-diameter, small-width blower fan and a compact, brushless blower motor. A built-in solid state control circuit controls the blower motor speeds.

Old vs. New Style Blower Motors

New type is brushless with no blower resistor.

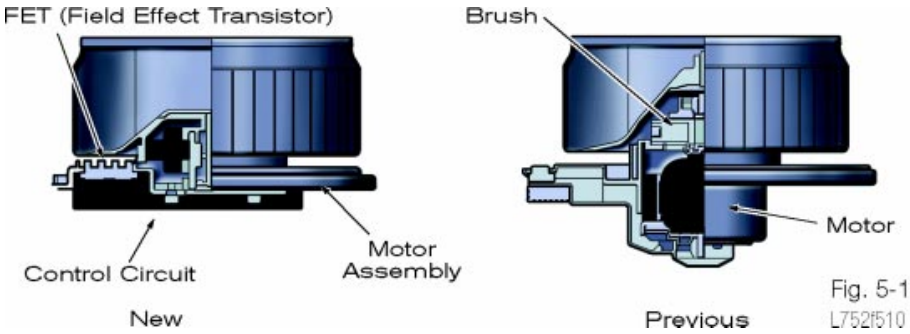

Fig. 5-10
L752f510

Air Distribution Control

Manual A/C systems use servo-motors or cables to control the air distribution and air flow. Most Lexus models have push-button, air distribution selector switches. When pressed, the various switches send signals to an amplifier (ECU) that controls the movement of the damper doors with a servo-motor. Some Lexus vehicles may have touch-sensitive air distribution controls on a screen display.

A/C Control Panel

Shown with all segments illuminated.

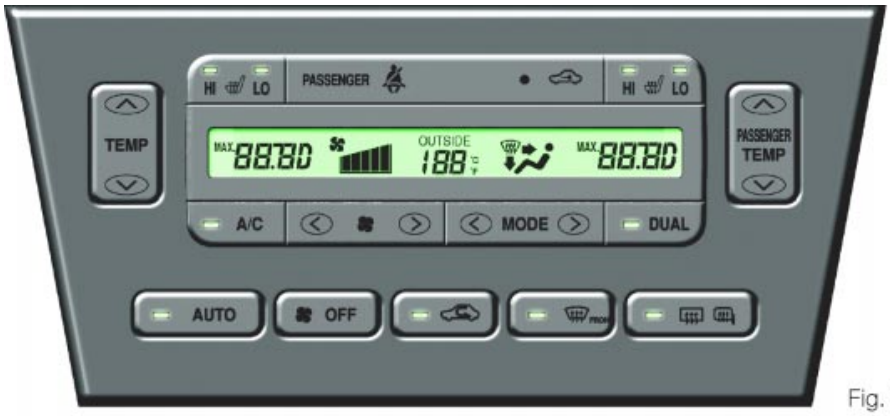

Fig. 5-11
L752f511

The air distribution system delivers air from the HVAC system to the various parts of the interior. Fresh air first enters the vehicle at an air inlet, usually at the base of the front windshield.

Control of Air Distribution Schematic

Blend or mix doors controlled by servo-motors.

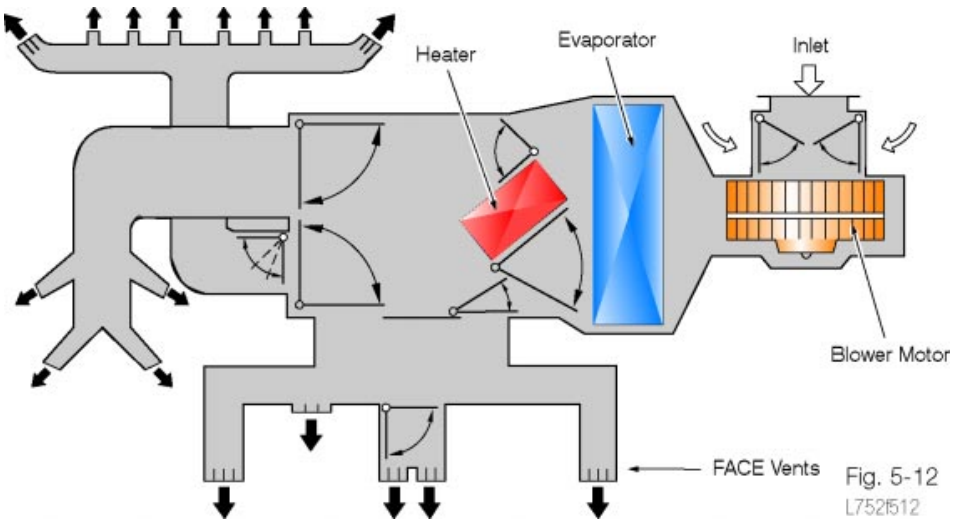

Fig. 5-12
L752f512

Air Inlet Control

The air inlet control is a damper that is driver-controlled to allow fresh air to enter (open) or to recirculate air in the interior (closed). The driver has a choice of air inlet modes: **FRESH** or **RECIRC** (recirculated air). One or two dampers positioned before the blower motor controls this mode.

FRESH The fresh air intake mode allows maximum airflow through the vents since the blower fan is assisted by vehicle speed. This mode is useful for defogging windows in cold weather when outside humidity is lower than that produced by vehicle occupants.

RECIRC This mode allows the blower motor fan to recirculate the air from inside the vehicle and provides maximum A/C performance since the air is already "conditioned" (low temperature and humidity). This mode also prevents foul outside odors from entering the vehicle. However, total airflow is limited because the body air inlets are closed.

Newer vehicles may provide a blend of both modes for greater comfort and windshield defrosting under most conditions. These vehicles may typically switch to full recirculation when the system is set to the lowest temperature (**MAX COOL**).

Many vehicles have a **clean air filter** located after the air inlet control to deodorize and remove dust from the outside air. This filter must be changed at specified intervals according to operating conditions.

Clean Air Filter

- Behind glove box.
- Replacement interval in Vehicle Owner's Manual.
- Reset filter change per Vehicle Owner's Manual (depress OFF switch).

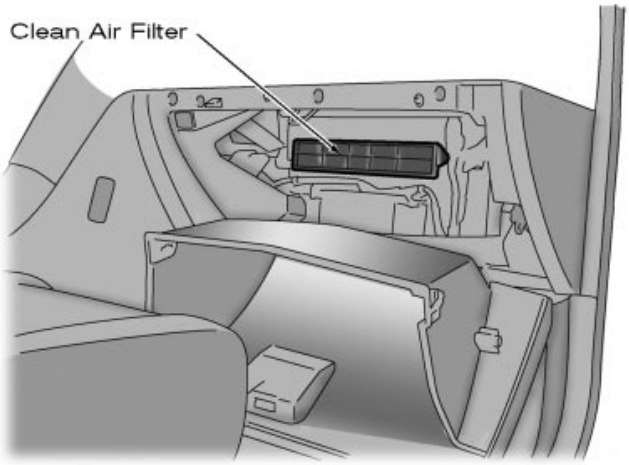

Fig. 5-13
L752f513

Some vehicles may have a NO_X (smog) sensor that automatically switches the system from **FRESH** to **RECIRC** (closes outside vent door) when the outside air contains a certain concentration of exhaust gas. NO_X sensors are discussed in Section 6.

At higher road speeds, airflow through the air inlet increases due to aerodynamic forces. At lower vehicle speeds, the blower fan assists normal airflow. From the blower fan, air passes through the evaporator, then through or around the heater core before going to the **plenum**, the central chamber inside the blower housing, then to the various ducts and air outlets.

Air Distribution Control and Air Outlet Mode Chart

Note: Amount of airflow from outlets in various modes shown in chart below and in Vehicle Repair Manual.

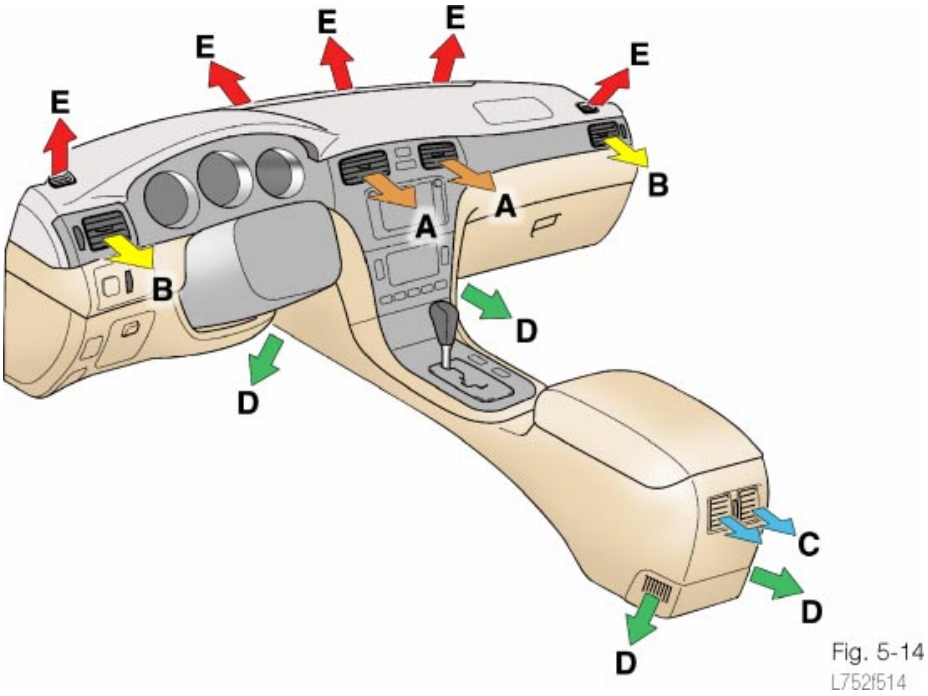

Fig. 5-14
L752f514

The size of the circle ○ indicates the proportion of airflow volume.

Air Outlet Mode	A	B	C	D	E
	Center Face	Side Face	Rear Face	Foot	Defroster
FACE	○	○	○	–	–
BI-LEVEL	○	○	○	○	–
FOOT	–	○	–	○	○
FOOT/DEF	–	○	–	○	○
DEF	–	○	–	–	○

If the A/C is ON, the evaporator cools the air inside the plenum. The air is then brought to the desired temperature by the position of the blend door, the hot heater core and the air mix servo-motor. There are additional damper doors (mode control dampers) that determine the distribution of the treated air from the plenum into the passenger compartment. There are usually three or more air outlets to the vehicle's interior:

Distribution Mode	**Air Direction, primary**	**Air Direction, secondary**
DEF (Defrost)	Air flows to vents at base of windshield	Foot level vents
HEAT	Air flows to foot vents	Defrost vents
BI-LEVEL	Air flows to both foot and dash vents	–
FACE or **VENT**	Air flows to dash level vents	–

Typical mode settings. See *Vehicle Repair Manual* for specific settings.

Vehicle Repair Manuals describe specific air distribution patterns using a chart (see sample charts). Notice that the larger circles indicate more airflow than the smaller circles.

Air distribution to the desired air outlet duct is controlled by a switch on the instrument panel. Some vehicles use a slide lever connected by a cable to a variable-position damper. The damper doors can also be operated by vacuum, supplied by a rotary vacuum switch on the instrument panel.

Typical Mode Position Charts

Mode Position

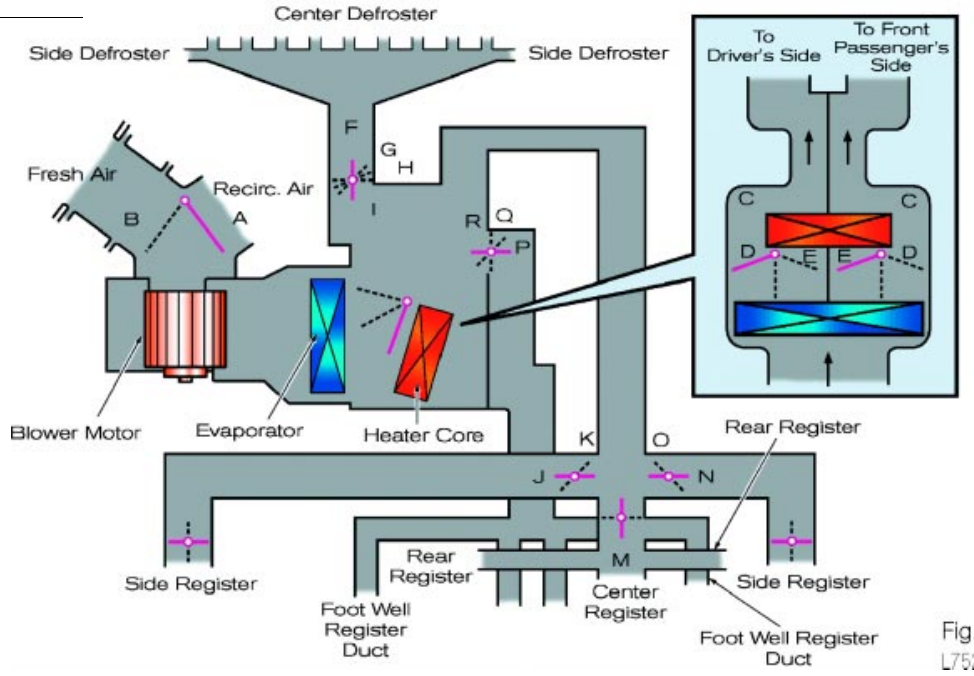

Fig. 5-15

Damper Operation Chart (typical)

Control Damper	Control Position	Damper Position	Operation
Air Inlet Control	**FRESH**	A	Brings in fresh air
Damper	**RECIRC**	B	Recirculates inside air
Air Mix Damper L/R Independent Control	**MAX COLD – MAX HOT TEMP SETTING** 65° F (18° C) – 85° F (32° C)	E ~ D ~ C E' ~ D' ~ C'	Varies the mixture ratio between fresh and recirculated air to regulate temperature
Mode Control Damper	**DEF**	F, K, L, O, R	Defrosts the windshield through the center defroster, side defroster and side register
	FOOT/DEF	G, K, L, O, Q	Defrosts the windshield through the center defroster, side defroster and side register while air also blows from the front and rear foot well register ducts
	FOOT	H, K, L, O, P	Air blows out of the front and rear foot well register duct and side register. In addition, air blows out slightly from the center defroster and side defroster
	BI-LEVEL	I, J, M, N, P	Air blows out of the center registers, side registers and foot well register ducts
	FACE	I, J, M, N, R	Air blows out of the center registers and side register

Mode Control Film Damper

Instead of using swinging damper doors to direct airflow through the system, some Lexus vehicles use a film damper mechanism. This mechanism contains a thin film material with openings in it similar to a camera shutter or player piano. Servo-motors roll and unroll the sheet into position so the correct openings provide the desired airflow path through the ductwork. The following system (shown) contains two film dampers: one which mixes fresh and recirculated air to regulate the air temperature, and the other to control the air distribution modes (Face, Foot, Defroster, etc.).

Front A/C Unit With Film Damper Controls

- Motors move wire pulley rotating film to open outlets.
- Driver and passenger sides separate.

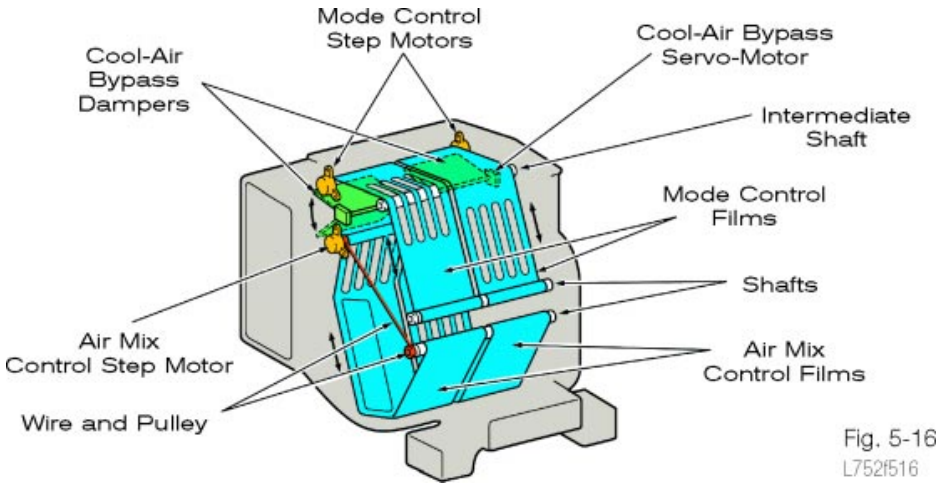

Fig. 5-16
L752f516

Film Damper System Diagram

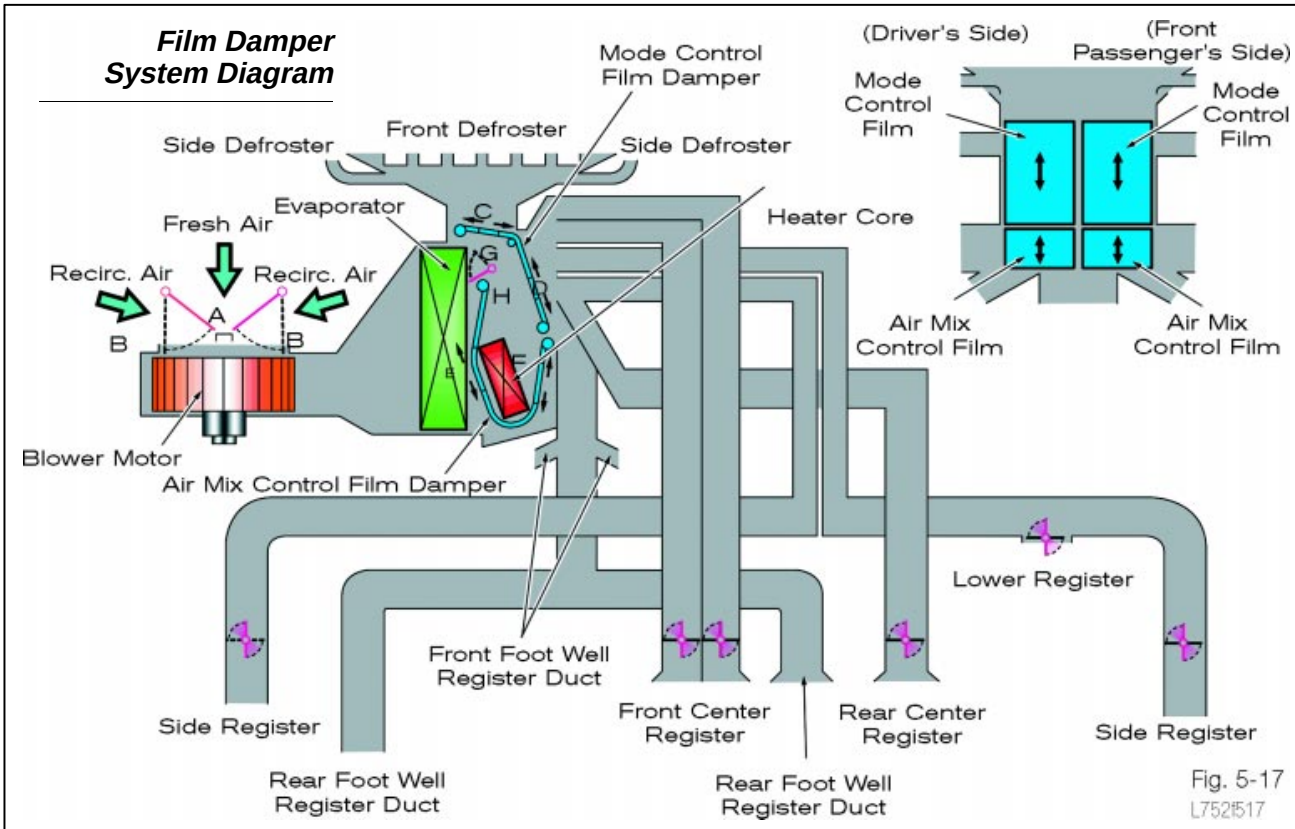

Fig. 5-17
L752f517

Notes

Section 6

Automatic Temperature Control

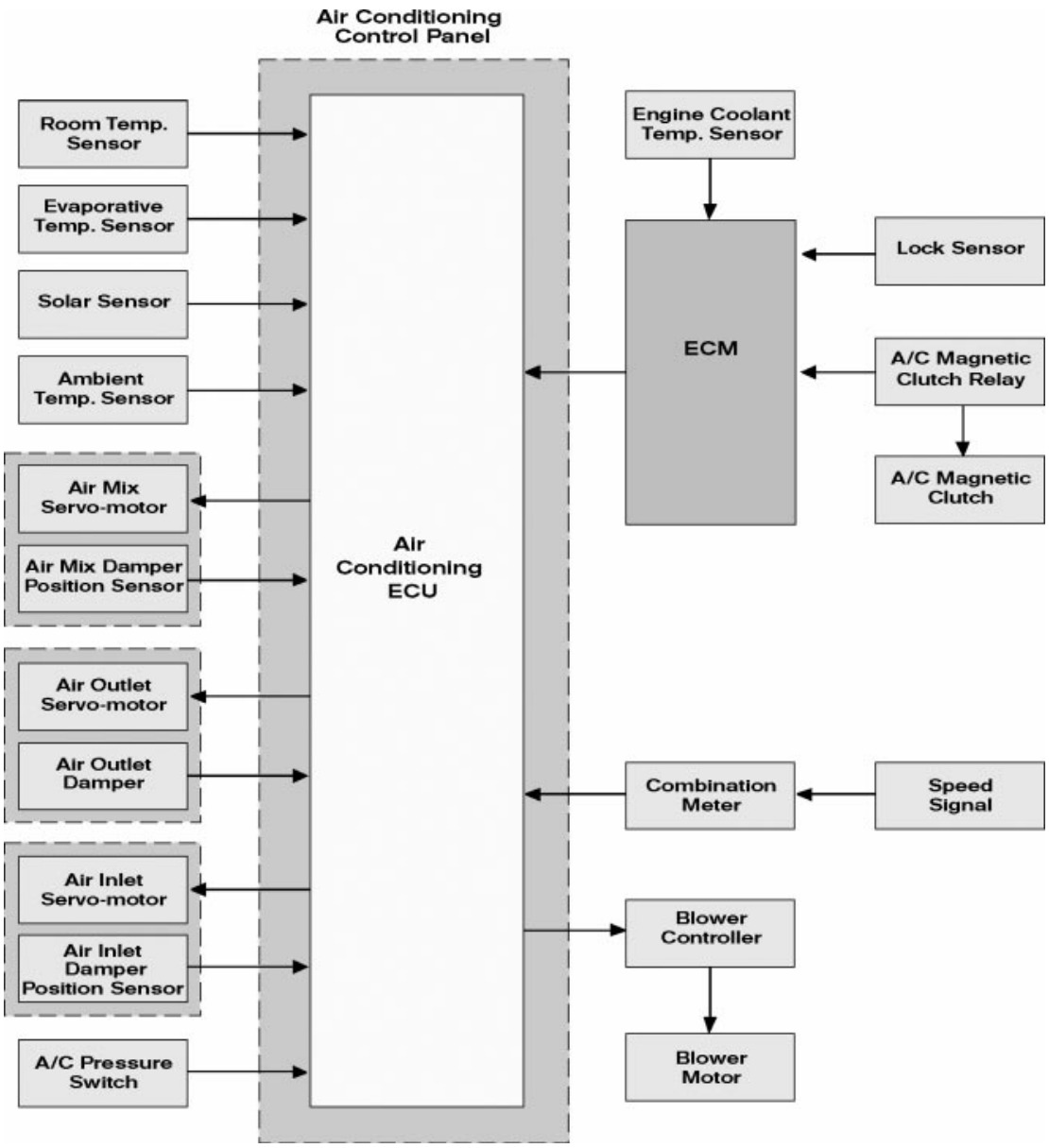

Lesson Objectives

1. Demonstrate the purpose of Automatic Temperature Control.
2. Identify and verify the function of various Automatic Temperature Control components and sensors.
3. Verify thermistor operation and functions in the Automatic A/C Systems.
4. Verify the function of the Neural Network Control System.
5. Identify and diagnose a malfunctioning A/C sensor.

Introduction to Automatic A/C

The heating, ventilation and air conditioning (HVAC) system in a house contains a wall-mounted thermostat to control outlet temperatures, distribution and fan speed. Changes are rarely made to the system other than to reprogram the ON and OFF times and to switch the system ON and OFF. In a vehicle, not all drivers wish to individually adjust all the functions while driving. For this reason, Automatic A/C systems were developed.

Automatic A/C Temperature Control

Automatic A/C is also referred to as “climate control.” Automatic A/C systems function like conventional manual HVAC systems, but also offer these functions:

- Ability to **maintain a specific interior temperature** selected by the driver under a variety of temperature and solar conditions
- **Automatic fan speed** selection based on the heating or cooling need
- **Automatic air distribution** pattern based on the HVAC mode
- **Automatic air intake control**

In an Automatic A/C system, the refrigerant circuit, electronic controls and safety systems are basically the same as a manual A/C system. Lexus Automatic A/C systems add additional sensors and controls to the basic system.

Here are some functions of the Automatic A/C controls on a late model Lexus:

Outlet Air Temperature Control	In response to the temperature control setting, the outlet air temperature, evaporator temperature sensor and engine coolant temperature sensor compensations are used by the air mix control damper control to calculate a target damper opening angle.
	The temperature setting for driver and front passenger is controlled independently in order to provide a separate air temperature for the right and left sides.
Blower Control	This function controls the operation of the blower motor according to the signals from the engine coolant temperature sensor, evaporator temperature sensor and the solar sensor. In addition, it protects the blower motor controller from the current surges when the blower motor is first activated.
Air Outlet Control	When the **AUTO** switch is **ON,** automatic control causes the air mix control servo-motor to rotate to a desired position for the correct outlet air temperature. During operation, the potentiometer in the servo-motor detects the actual damper opening so the system can match the actual opening to the desired damper opening.
	To prevent the front windshield from fogging up when the outside air temperature is low, the system automatically switches the blower outlet to the **FOOT/DEF** mode. Sensor inputs from engine coolant temperature, outside air temperature, amount of sunlight, required blower outlet temperature and vehicle speed.
Air Inlet Control	Drives the servo-motor (for air inlet) according to the operation of the air inlet control switch and fixes the dampers in the **FRESH** and **RECIRC** position.
	When selecting **RECIRC** mode under manual operation, if the outside air temp. is low and refrigerant pressure has a malfunction, the A/C ECU automatically switches the air inlet mode to the **FRESH** mode. However, if the outside air temperature is much lower than the specified temperature, in spite of the malfunction of the refrigerant pressure, the A/C ECU automatically switches the air inlet mode to the **FRESH** mode.
	When selecting **RECIRC** mode under manual operation, if the compressor switches OFF, the A/C ECU automatically switches the air inlet mode to the **FRESH** mode.
Compressor Control	The control switches the magnetic clutch OFF when the blower motor is switched OFF, when the engine coolant temperature is below a predetermined value, an abnormal refrigerant pressure has been input or the discharge temperature of the evaporator is below a predetermined value.
	When the **DEF** mode switch is ON, the magnetic clutch relay activates automatically to engage the compressor. In addition, when the blower is switched OFF and the front defroster switch is switched ON, the blower will activate in the automatic control condition.
Seat Heater Control	The HI, LO and OFF settings of the seat heater can be switched by pressing the seat heater switch (driver and front passenger). Based on signals from the seat heater temperature sensor, the A/C ECU switches the seat heater relay ON/OFF to regulate the set temperature. Switching the ignition to OFF switches the seat heater OFF.

Rear Window Defogger Control	When the rear window defogger is ON, the rear window defogger and outside rearview mirror heater operates. After 15 minutes, the system switches OFF.
Outer Temperature Indication Control	Based on signals from the ambient temperature sensor, this control calculates the outside temperature which is then corrected in the A/C ECU and displayed in the A/C control panel.
Self-Diagnosis	Checks the sensor according to the operation of the A/C switches. The heater control panel then displays a portion of the Diagnostic Trouble Code (DTC) indicating a malfunction or a sensor check function.
	Drives the actuators through a preset sequence according to the operation of the A/C switches (actuator check function).

Automatic A/C Components

An Automatic A/C system contains the following components:

Component	Function
A/C Electronic Control Unit (ECU)	Logic system to control system components based on sensor inputs
Heater Relay (blower fan relay)	Confirms blower fan is ON
Temperature Sensors (thermistors): Ambient Temperature Sensor Room Temperature Sensor Evaporative Temperature Sensor Engine Coolant Temperature Sensor Duct Sensor	Temperature-sensitive resistors: – Measures outside air temperature – Measures cabin air temperature – Measures evaporator temperature to prevent freezing – Measures engine coolant temperature – Measures dash outlet temperature
Pressure Switches (high and low)	Ensures system pressure is within safe operation conditions
Belt Protection Sensor	Detects drive belt speed
Solar Sensor	Detects sunlight for greater system control
NO_X Sensor	Detects exhaust gas in exterior air to control outside vent door
Engine RPM Sensor	Determines engine speed for idle up mode
Speed Sensor	Determines vehicle speed

A/C Amplifier

The ECU of a Lexus Automatic A/C system not only controls compressor clutch and engine idle-up operation, it also controls outlet temperature, airflow distribution and fan speed based on a determination of interior and ambient temperature with a compensation for solar load.

Microcomputer-Controlled Auto A/C System

Auto A/C system sensors and components.

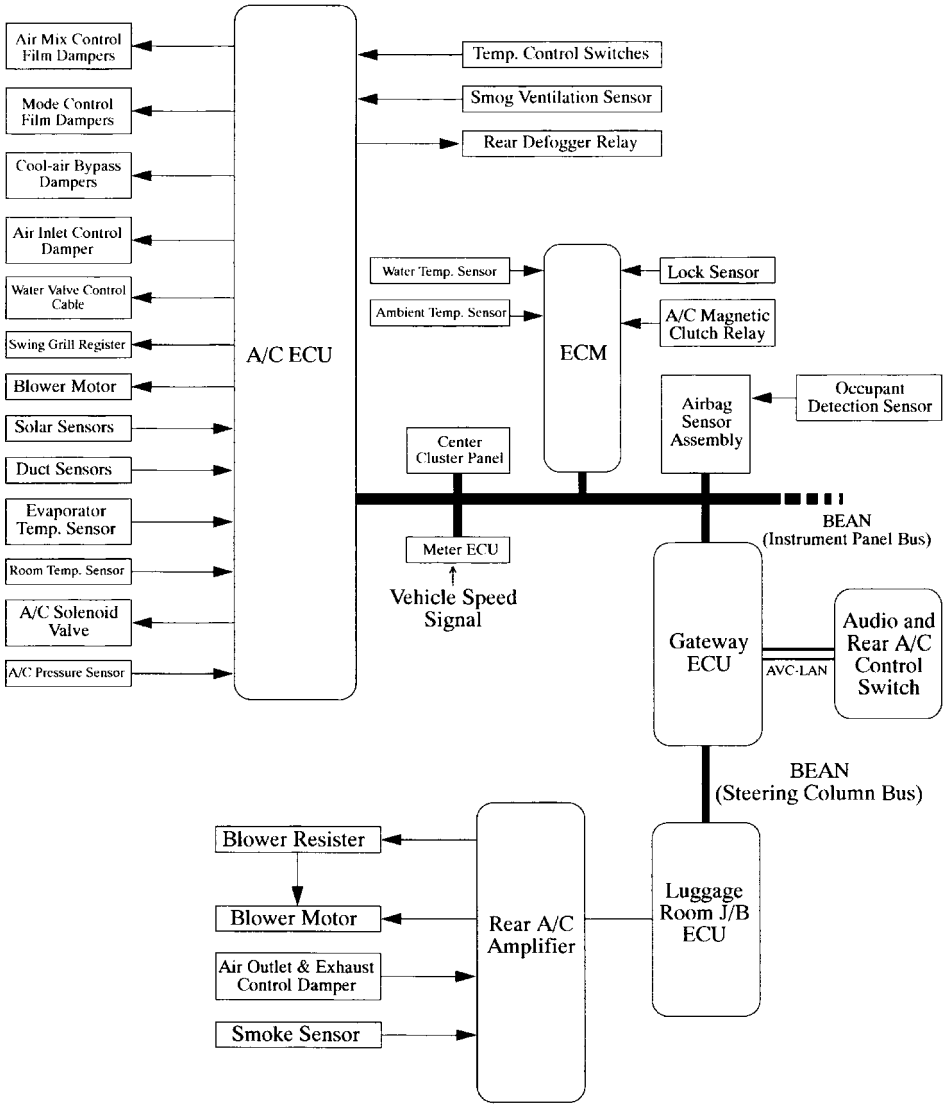

Fig. 6-1
L752f601

In addition, the A/C ECU monitors refrigerant pressure by controlling the compressor clutch and provides signals to the **ECM (engine control module)** for idle stabilization. In some vehicles, the compressor clutch relay is not controlled directly by the A/C ECU but instead by the powertrain control module that receives a signal from the A/C ECU.

The primary control unit for the compressor clutch circuit is the A/C ECU. The ECU is a device that has an output current greater than the input signals. The amplifier section of the ECU processes low current signals from a number of sources to control a relay. The relay supplies power to energize the compressor clutch. The relay also adds a further level of amplification to the circuit since the power side of a relay can pass more current than is needed to activate the control side.

The amplifier cycles the compressor clutch ON and OFF in order to provide the most efficient transfer of heat at the evaporator while preventing the evaporator from icing. The amplifier's output signal also activates the condenser fans at low speed and raises the engine idle speed (via the engine and transmission ECU) to avoid stalling the engine whenever the compressor switches ON.

Compressor Clutch Circuit

Main components:

- Prevents overcooling or lock up.
- Prevents excessive pressure.

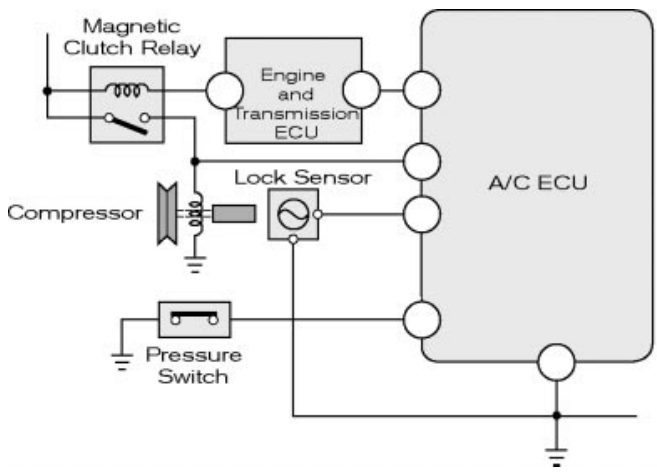

Fig. 6-2
L752f602

Input Sensor Signals to the A/C Amplifier

Input Signal	Function
Temperature Selector	Selects desired cabin (interior) temperature
A/C Switch	Allows driver to switch compressor ON or OFF
Heater Relay (blower fan relay)	Confirms blower fan is ON
Thermistors: Ambient Temperature Sensor Room Temperature Sensor Evaporative Temperature Sensor Engine Coolant Temperature Sensor	Electrical temperature sensor: – Measures outside air temperature – Measures cabin air temperature – Measures evaporator temperature to prevent freezing – Measures engine coolant temperature
Pressure Switches (high and low)	Ensures system pressure is within safe operating condition
Belt Protection Sensor	Detects drive-belt speed
Solar Sensor	Detects sunlight for greater system control
NO_X Sensor	Detects exhaust gas in exterior air to control outside vent door
Engine RPM Sensor	Determines engine speed for idle up mode
Speed Sensor	Determines vehicle speed

Automatic A/C Control Panel

Compared to a manual system, an automatic A/C system features a temperature control display marked with degrees and one or two additional buttons on the control panel labeled AUTO to select automatic fan speed and/or air distribution (almost like your home's HVAC system).

When automatic A/C is desired, the driver selects the temperature in one of three ways:

1. Slide lever
2. Rotating knob
3. Push button

Control Panels

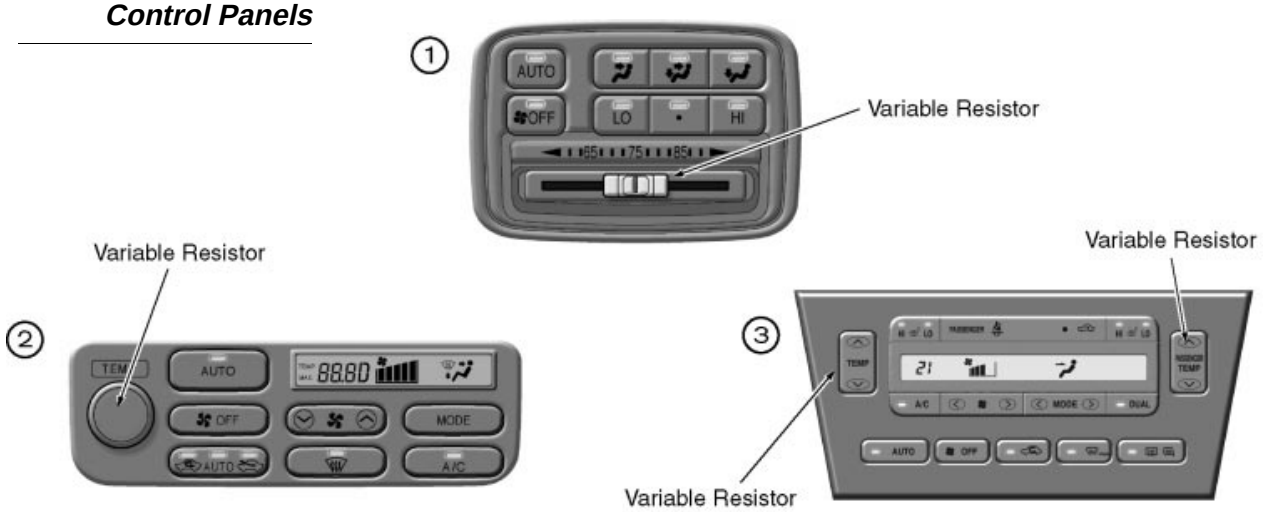

Fig. 6-3
L752f603

Each type of control causes a transistor circuit in the ECU to send a variable voltage signal to the microprocessor. Changing the temperature selector (or display) changes the signal value.

The primary input signal to the amplifier is a variable voltage from the temperature selector that represents the desired interior temperature. This potentiometer provides a variable resistance as it moves from cold to hot (except at the extremes). In the chart on the following page, notice the **MAX COOL** position (lower than 70° F) the resistance rises to infinity ($\infty\Omega$). In the **MAX HEAT** position (over 85° F), the resistance goes to 0 ohms.

Temperature Selector Resistance Chart

- Variable resistor.
- Higher temperature setting has lower resistance (Ω).

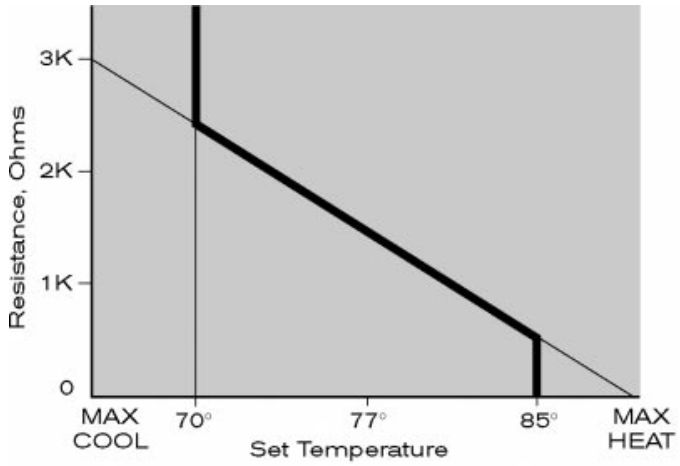

Fig. 6-4
L752f604

Temperature Sensor Circuits

The objective of the Automatic A/C system is to reach an output temperature based on a preset temperature. Lexus uses the terms **"TSET"** to represent the preset temperature and **"TAO"** to represent the desired output temperature. To be effective, the HVAC system must be able to deal with variables such as the number of passengers in the vehicle, relative outside temperature and the solar load in the vehicle. For maximum comfort, the system anticipates conditions that will affect the interior temperature before the temperature rises. Here are the various inputs to the A/C ECU to determine TAO. It is only important to be aware of the variables that determine TAO.

TAO (output temperature) = A x TSET – B x TR – C x TAM – D x TS + E

Temperature Variables	Description
A	Set temperature coefficient
B	Room air temperature coefficient
C	Ambient air temperature coefficient
D	Solar radiation coefficient
E	Correct constant
TSET	Set temperature
TR	In-car temperature
TAM	Ambient air temperature
TS	Solar radiation

Servo-Motor Control

On current vehicles, servo-motors control the damper doors. A servo-motor is an electric motor that contains a potentiometer (variable resistor) or a multiple-position contact switch. This device acts like a position sensor to provide feedback to the amplifier to confirm and to control the position of the damper.

The Automatic A/C system uses the air mix ("blend door") system for rapid and accurate temperature adjustment; the blend (air mix) door is moved by the ECU-controlled servo-motor instead of a cable from the temperature selector. Current water control valves are also operated by a cable (via a servo-motor).

Distribution Control (Servo-Motor Controls)

- Electrically controlled.
- Mover air mix or blend doors.

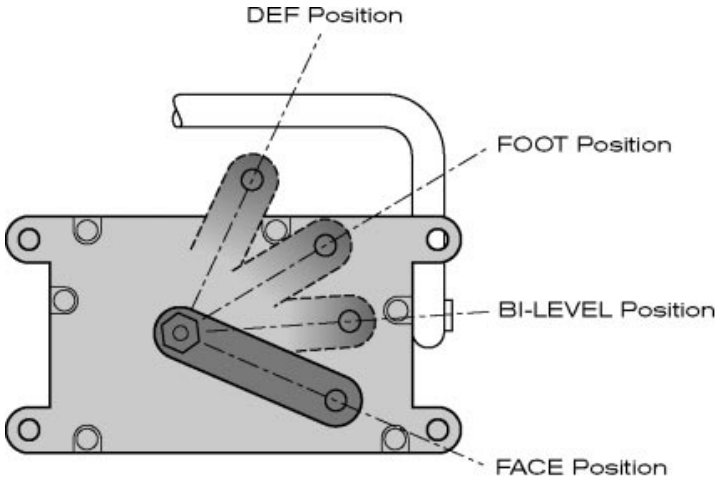

Fig. 6-5
L752f605

On some Lexus vehicles, the damper doors are replaced by a "film damper" mechanism to distribute the air to the various air outlets. Additional information on the film damper system was discussed in Section 5.

Servo-Motor Internal Circuit

Moving contacts provide feedback on actual door movement.

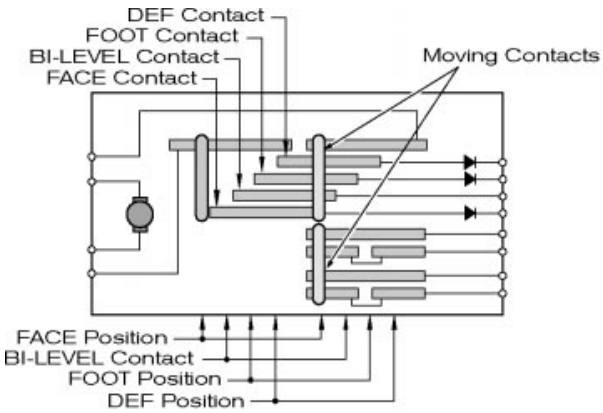

Fig. 6-6
L752f606

Temperature sensor signals from various locations in the vehicle are amplified inside the A/C ECU to produce a temperature value. This value is then compared with the preset temperature (from the A/C control panel) to determine the relative **balance** of the system. When all of the amplified input signals meet the preset air temperature, the system is

said to be in balance; that is, the air mix servo-motor damper door remains in position and the fan speed is kept low. Once the system is in balance, there is no current flow to the air mix servo-motor.

When heat or solar load conditions create an imbalance, the ECU amplifies the difference to operate one of two **switching amplifiers** according to whether the interior must be warmer or cooler. The switching amplifiers contain pairs of transistors and can conduct in either polarity to produce a signal which controls the air mix servo.

Control of Blend Air Damper

Since the servo-motor is an electric DC motor, changing the polarity (+ and –) of the supply and ground causes the motor to rotate in different directions, just like a power window motor. When there is a temperature difference, one switching amplifier produces a positive voltage; the other amplifier supplies a ground to move the air mix servo-motor in the direction of cooler or warmer air delivery.

Servo-Motor Control Circuit

Amplifiers control polarity to air mix servo-motor.

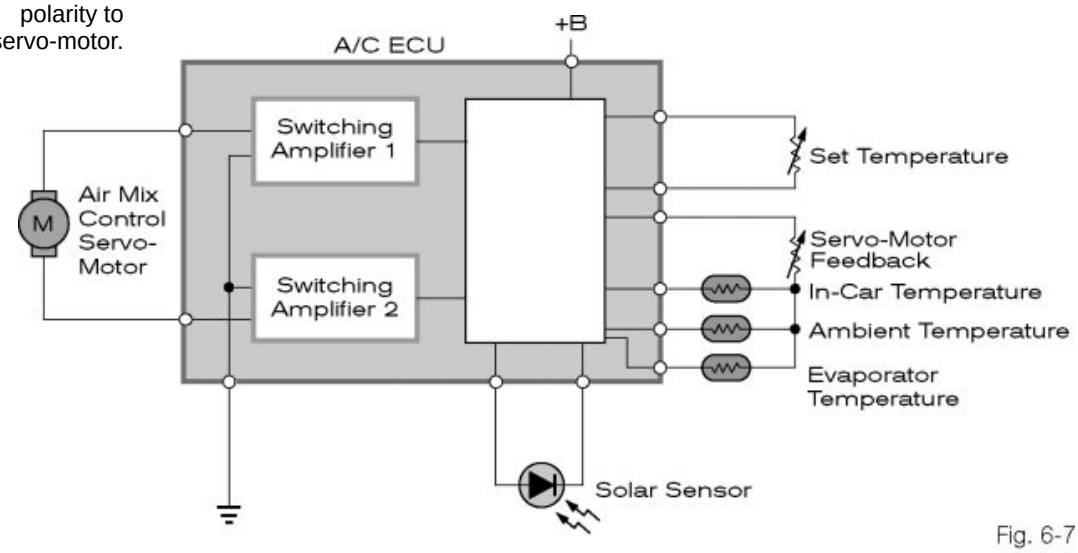

Fig. 6-7
L752f607

Depending on temperature requirements, the ECU selects a “target” damper door position and measures the actual position with a potentiometer (variable resistor) within the servo-motor. The ECU also monitors the resulting change in temperature to verify the servo-motor(s) responds appropriately.

The A/C ECU will continue to output a control current to the servo until the system is in “balance” as follows:

- Initially, this happens when the potentiometer in the servo-motor indicates movement of the servo to a position which offsets the temperature change.
- Later, the temperature in the vehicle will change to match the desired temperature. Thus, the ECU will stop current flow to the servo-motor.

This system allows the temperature to “overshoot” to rapidly adjust the temperature in response to a temperature change. This is followed by readjusting to the desired temperature setting.

Servo-Motor Circuit

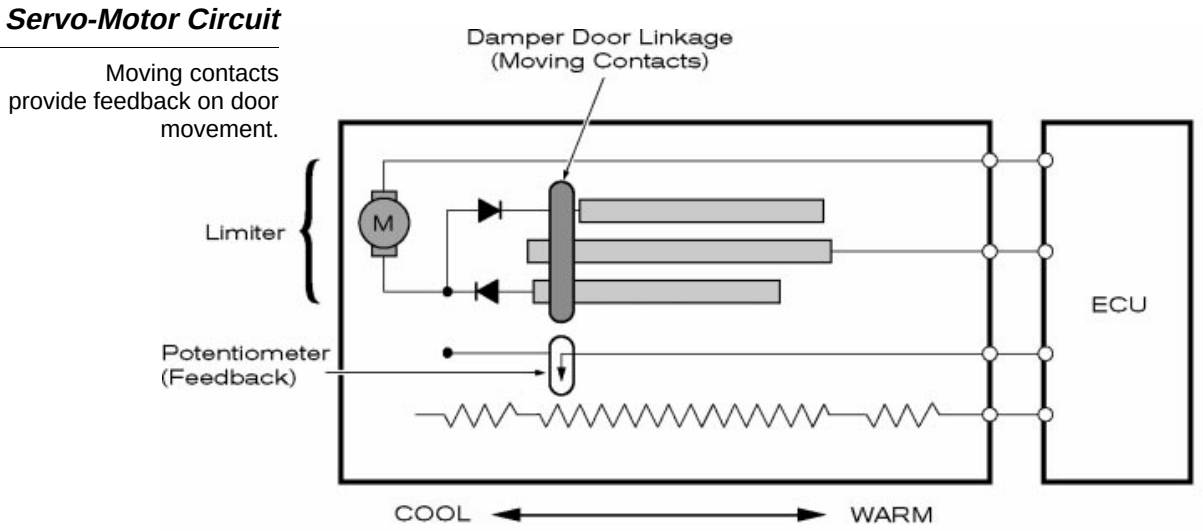

Fig. 6-8
L752f608

Pressure Switches

Pressure switches can sense high or low pressures or both. These can be separate switches or a single switch that senses multiple pressures (dual or triple pressure switch). Pressure switches are normally closed and are located in the high-pressure side of the system. When the switch opens due to excessively high or low system pressure, the amplifier will disable the compressor clutch to prevent component damage. For additional information, refer to Multipressure Switch in Section 3.

Belt Protection Sensor

To reduce the overall length of the engine, accessories may be driven by just one or two belts. The A/C compressor and power steering pump are usually driven by the same belt. However, if the compressor were to seize, the belt could break which would cause a loss of power steering assist. A belt protection system is used on all Lexus models to reduce the potential safety hazard of a loss of power steering.

Belt Protection Sensor

- Signals ECU that compressor is locking.
- See text below.

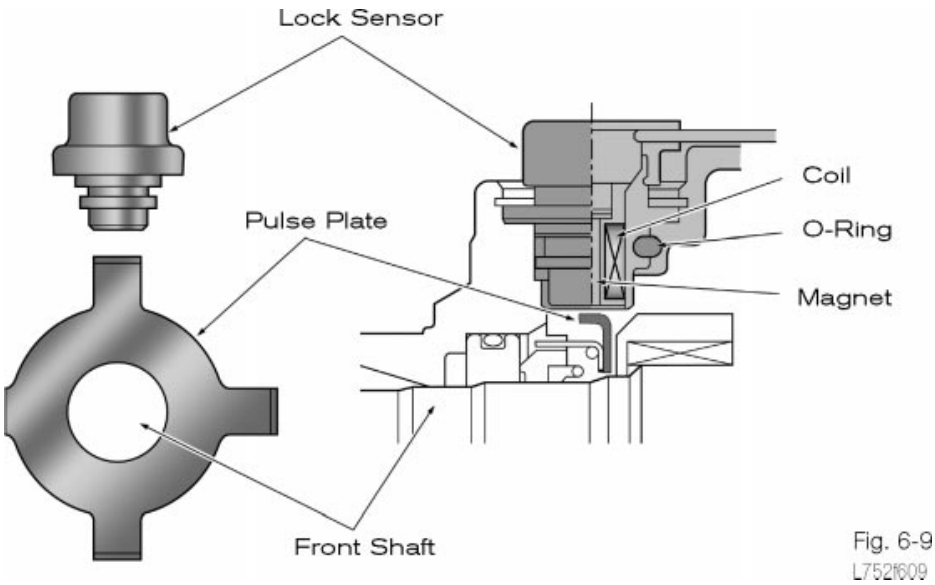

Fig. 6-9
L752f609

The belt protection circuit of the A/C amplifier or ECU monitors the following signals:

- Engine rpm **(Ne)** is monitored at the Engine Control Module (ECM) or at the ignitor.
- Compressor shaft rpm is measured by a magnetic pickup in the side of the compressor housing.

The amplifier or A/C ECU will compare these signals to determine if Ne is different from the compressor rpm by **more than 60 percent or longer than 0.6 seconds.** If it does, the system will:

- De-energize the compressor clutch relay. This will disengage the compressor clutch.
- The amplifier will also cause the indicator lamp in the A/C button or display to flash (to alert the driver of the malfunction).
- The system will reset when the ignition is switched OFF then ON again.

Other conditions can cause the sensor to detect a difference in speed between the engine and compressor:

- A system that is overcharged with refrigerant or refrigerant oil. Compressor lockup is possible due to the extremely high pressures that could result.
- A slipping A/C drive belt due to loose tension and/or oil or water on the belt.
- A loss of signal to the amplifier from either the ignitor or the rpm sensor.
- A malfunctioning compressor clutch due to an open circuit in the source wire or in the clutch windings.
- Mechanical failure or lockup inside the compressor.

Thermistor

A thermistor is a temperature-sensitive resistor. Most electrical components have a higher electrical resistance as the temperature increases. This is called a positive temperature coefficient. Special thermistors with a **Negative Temperature Coefficient (NTC)** provide accurate temperature sensing for A/C and fuel injection systems. As the temperature increases, the electrical resistance decreases. The A/C ECU reads the resultant voltage to interpret the temperature.

Resistance vs. Temperature of Thermistor

- A/C temperature sensors are thermistors.
- Resistance decreases and temperature increases.

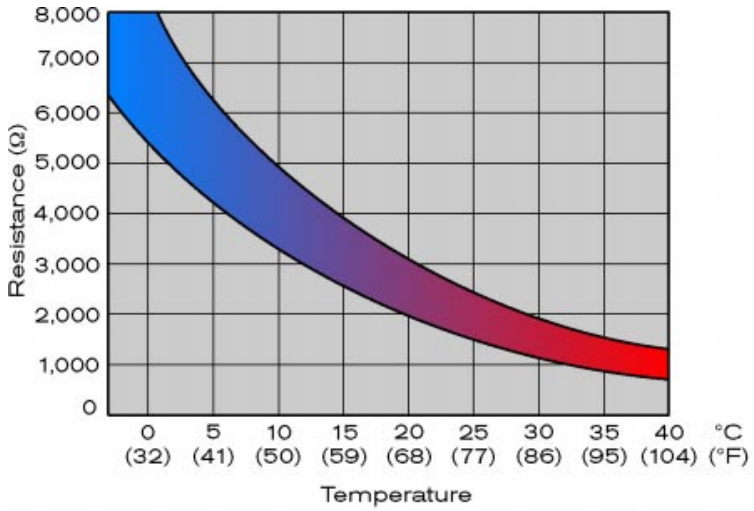

Fig. 6-10
L752f610

The A/C ECU supplies a fixed voltage to the sensor, then measures the voltage drop across the thermistor. As the resistance changes, so does the voltage drop. In this way, the amount of voltage drop created by the thermistor is used by the amplifier as an input signal.

In-Car Sensor (Thermistor)

The in-car sensor measures the air temperature inside the vehicle. In-car sensors are usually located in the dash or center console. The actual sensing element is very small, about 1/8” (2 mm) diameter so it can respond quickly to temperature changes.

To avoid being affected by solar radiation or hot car surfaces, it is shaded from direct light but located in the air stream. Some models have a miniature fan and motor to draw air over the sensor. Other models use an aspirator powered by the air pressure in the blower case to draw interior air past the sensor.

In-Car or Interior Temperature Sensor

- Thermistor measures interior air temperature.
- Aspirator creates air movement over sensor.

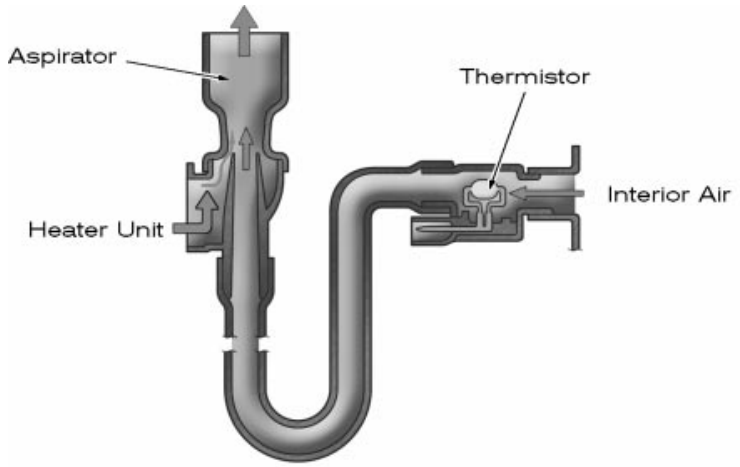

Fig. 6-11
L752f611

Ambient Temperature Sensor (Thermistor)

Outside temperature is measured by the ambient sensor so the system can anticipate changes in cooling demand as the ambient temperature changes. It is located in front of the radiator and condenser, but out of the air stream.

Ambient Temperature Sensor

- Located at front grille.
- Senses outside air temperature.
- Also controls temperature gauge.

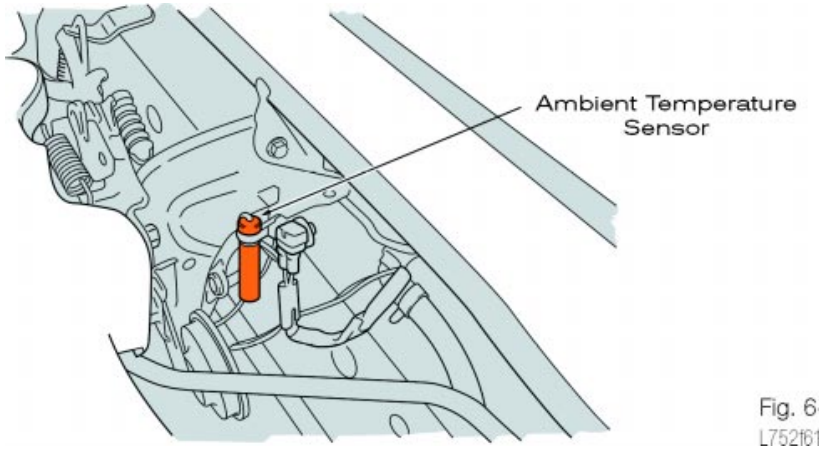

Fig. 6-12
L752f612

Solar Sensor

Sixty percent of the heat entering a vehicle comes from solar radiation. Since the air in the car does not heat up immediately in bright sun, the desired interior temperature can be maintained by **anticipating** the effect of solar heat load. The solar sensor is usually located on top of the instrument panel. Vehicles with a rear A/C system may have a solar sensor mounted on the rear package shelf below the rear window.

The solar sensor is a photo-diode rather than a thermistor. It normally blocks the flow of current in both directions (it has a resistance of near $\infty\Omega$) except in the presence of light. When exposed to light, the photo-diode biases the junction of the diode so that its resistance in one polarity falls to near 0. It then gradually begins to conduct in one direction.

Solar Sensor

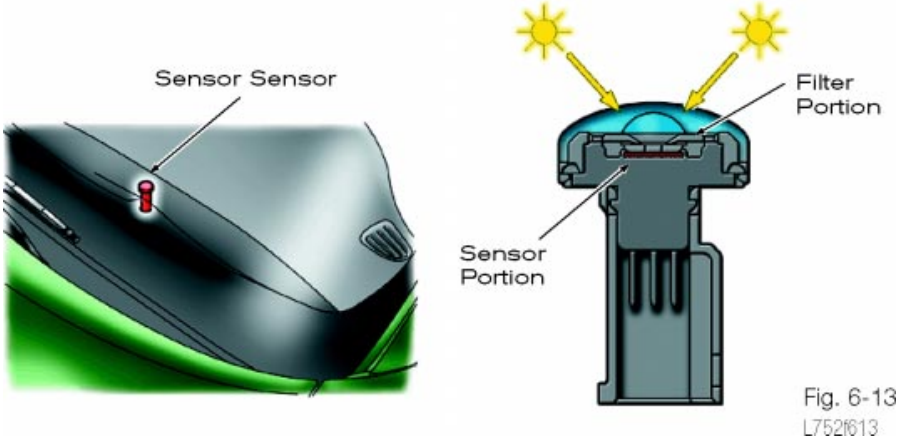

Fig. 6-13

Like a temperature sensor, the solar sensor is supplied with a fixed voltage so the A/C ECU can read the voltage drop to and sense the solar heat entering the vehicle. The amplifier (or A/C ECU) can adjust the outlet air temperature based on changes in sunlight before the interior temperature changes. Some Lexus vehicles use a solar sensor that measures sunlight falling from two angles to provide additional control over both driver and passenger seating areas.

On current models, the A/C control unit controls blower speeds through several steps according to various sensor inputs — the following chart tracks blower air volume according to the amount of sunlight.

Stepless Fan Speeds

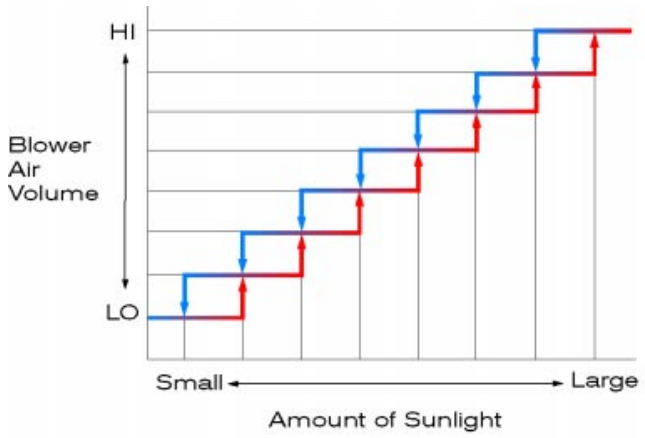

Fig. 6-14
L752f614

Duct Sensor (Thermistor)

On some Lexus vehicles, air temperature in the air distribution ducts is monitored by duct sensors. The A/C ECU changes the air distribution dampers to adjust the airflow and air temperature accordingly.

Duct Sensor Location

Thermistor sends "air temperature" signal to the A/C control unit

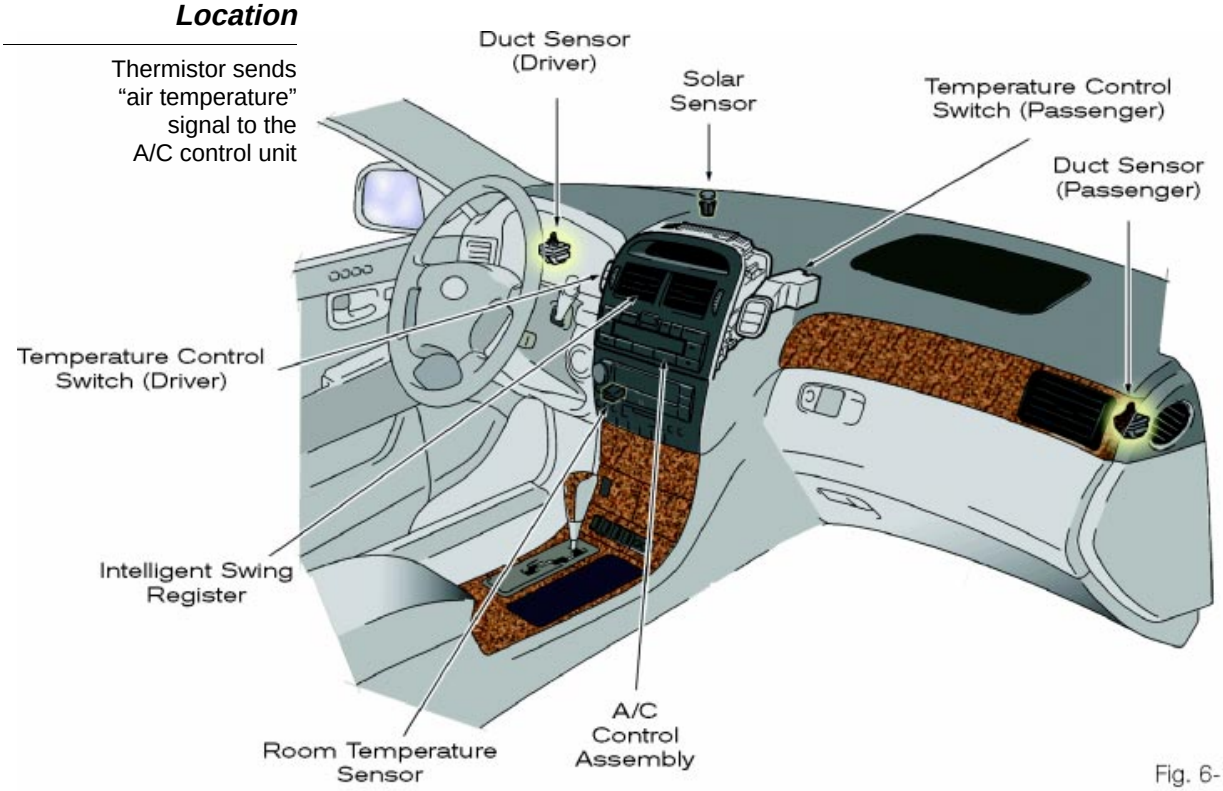

Fig. 6-15
L752f615

NO_X (Smog) Sensor

Vehicles with this system automatically switch between the recirculation and fresh air modes according to the concentration of exhaust gases in the incoming outside air. Refer to the **Air Distribution Control** section for additional information.

Automatic Recirculation Control

Moves inlet damper from fresh to recirc position.

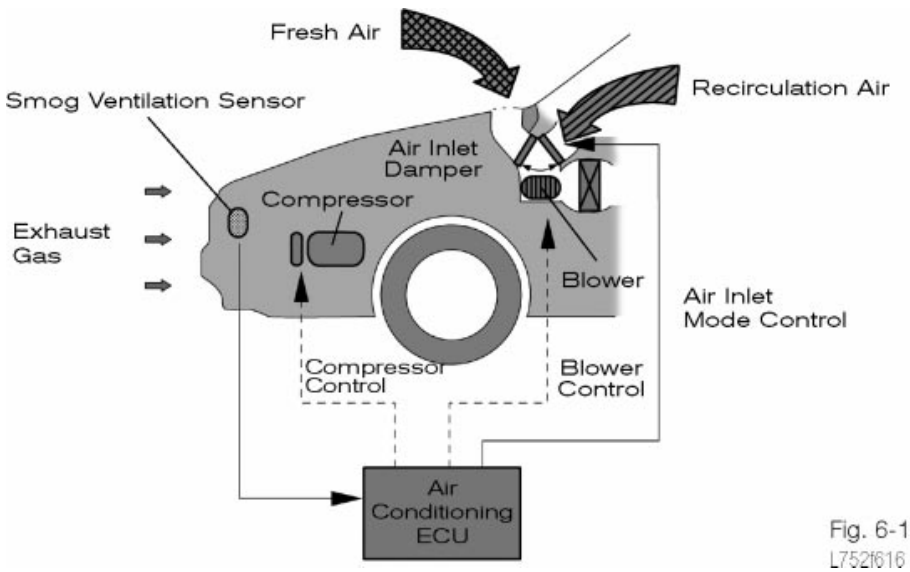

Fig. 6-16
L752f616

Maximum Cool Damper

On vehicles with automatic temperature control, a **MAX COOL Damper Door** can open (**MAX COOL** mode and **FACE** air-distribution modes) to deliver additional cool air from the plenum to the dash vent outlets.

The damper is located after the evaporator. When energized, the damper moves to allow cool air to bypass the heater core to deliver the lowest possible air temperature to the outlet air vents.

Maximum Cool Damper

Adds flow on MAX COOL.

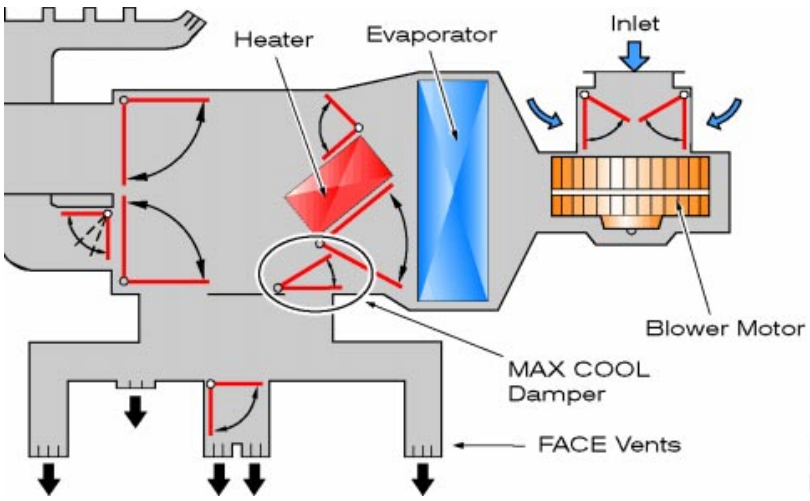

Fig. 6-17
L752f617

When the max cool damper is open, air resistance through the system decreases. This allows more air to enter the vehicle through the system without increasing fan speed or noise.

Multimode

This feature blows air from all the vents during warm-up immediately after the engine starts in cold weather. This prevents the windows from fogging and helps to warm up the upper body.

Neural Network Control (NNC)

Found on some Lexus vehicles, the Neural Network Control (NNC) system is designed to provide a higher level of control of the Automatic A/C system. It does this by using electronics to simulate the thought and logic processes of a human. The heart of this system is an A/C ECU containing computer logic circuits that process the various sensor inputs, then control the system actuators (servo-motors, fan speed, etc.) in order to arrive at the desired interior temperature and air distribution pattern. The following illustrates the interaction between input sensors, control logic and output devices in an automatic A/C system with NNC.

Neural Network Control Flow Chart

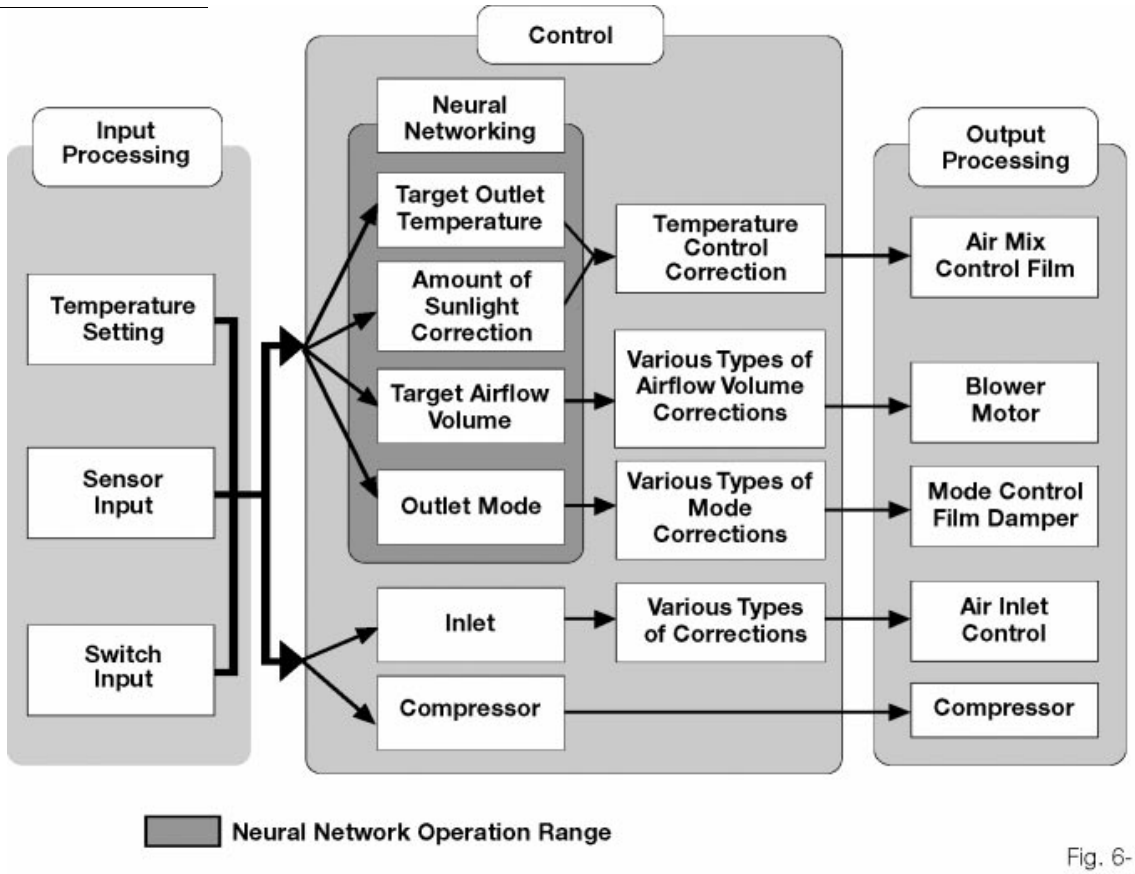

Fig. 6-18
L752f618

Summary of Neural Network Control System (NNC)

Control	Outline
Neural Network Control	Capable of processing variable input sensory signals in order to adjust the output of the A/C system much like a human being would process and control it.
Outlet Air Temperature Control	At a set temperature, the NNC system calculates the outlet temperature based on input signals from various sensors. In addition, corrections are added to control the outlet air temperature according to signals from the evaporative temperature sensor and water temperature sensor.
Blower Control	Controls the front and rear blower motors according to airflow volume that are calculated by the NNC based on input signals from various sensors.
Air Outlet Control	Automatically switches the outlets according to the outlet mode ratio based on the input signals and calculated by the NNC system.
Air Inlet Control	Automatically controls the air inlet control damper according to the airflow volume calculated by the NNC.
Compressor Control	Controls the compressor to switch ON/OFF and discharge capacity based on signals from various sensors.
Outside Temperature Indicator Control	Based on signals from the ambient temperature sensor, it calculates the outside temperature which is then corrected in the A/C ECU and shown in the control panel display.
Rear Window Defogger Control	Switches the rear defogger and outside rearview mirror heaters ON for 15 minutes when the rear defogger switch is ON. Switches them OFF if the switch is pressed while they are operating.
Clean Air Filter Clogging Judgment	Determines if the clean air filter (for the front A/C) is clogged by monitoring the air inlets and airflow volume.
Automatic Recirculation Control	The A/C ECU automatically controls the air inlets based on signals from the smog ventilation sensor.
Air Quality Control*	Improves air quality by linking the air inlet control damper and the blower motor (for rear A/C and air purifier) based on signals from the exhaust gas sensor and smoke sensor.
Self-Diagnosis	Checks sensors according to the operation of the A/C switches, then displays a DTC to indicate if there is a malfunction or not (sensor function check).
	Drives the actuators through a predetermined sequence according to the operation of the A/C switches (actuator check function).

* With rear air conditioning and air purifier.

The following are additional features that illustrate the subtle control provided by the NNC system:

The swing register is the air distribution door in the center air outlet. A servo-motor controls the angle of each door. Their position is based on input from the interior air temperature sensor, solar sensor and the occupant detection sensor (in the front passenger seat).

Intelligent Swing Register Control

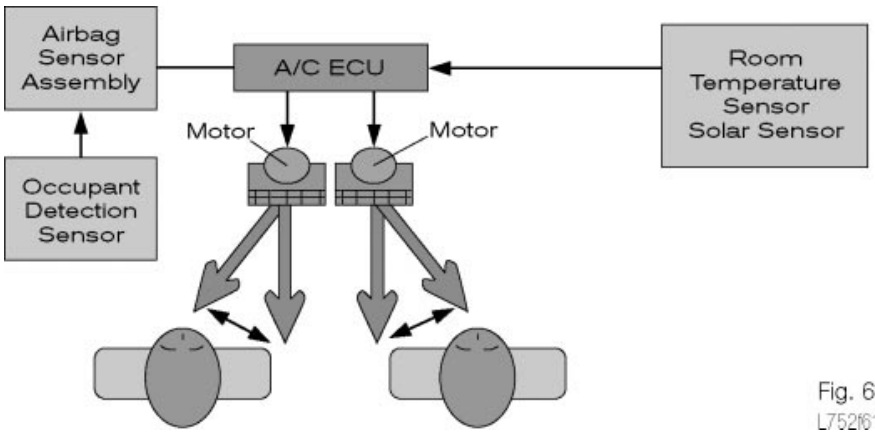

Fig. 6-19
L752f619

During the initial stages of cooling down or warming up, this system controls the swing register to improve the perception of cooling or heating for the front seat occupants. When the interior temperature stabilizes, the register gradually moves so airflow is directed away from the front seat occupants.

Swing Register Control Diagram

Directs flow differently with passenger seated.

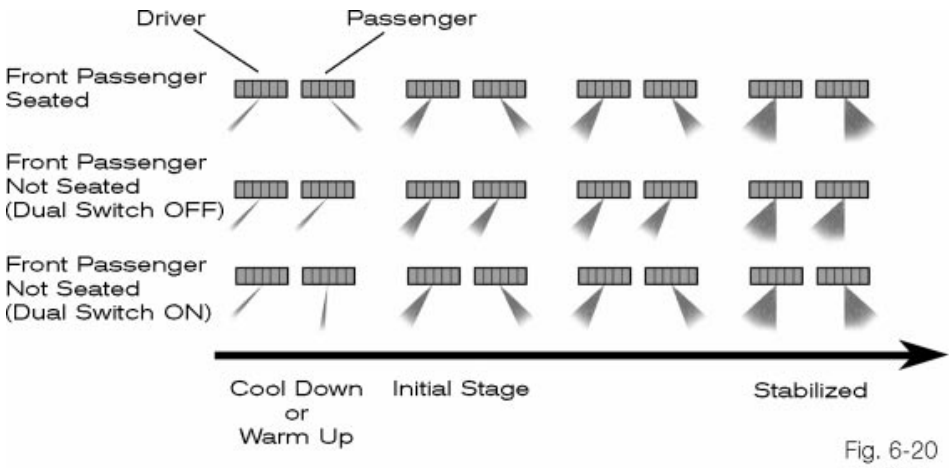

Fig. 6-20
L752f620

This system also monitors duct temperatures and changes the face and feet air temperatures if sunlight falls on the solar sensor.

Air Filter Replacement

In normal use, the airflow through the HVAC system decreases as the filter becomes clogged. This affects system efficiency. The replacement filter replacement interval is specified in the *Vehicle Owner's Manual*. However, there is no way to tell when the filter was last replaced or when it should be replaced. On some models, the ECU determines filter efficiency by monitoring the airflow volume, then comparing it with a target airflow value. The ATC control panel shows "CHANGE A/C FILTER" when the filter needs replacement.

Clean Air Filter Diagram

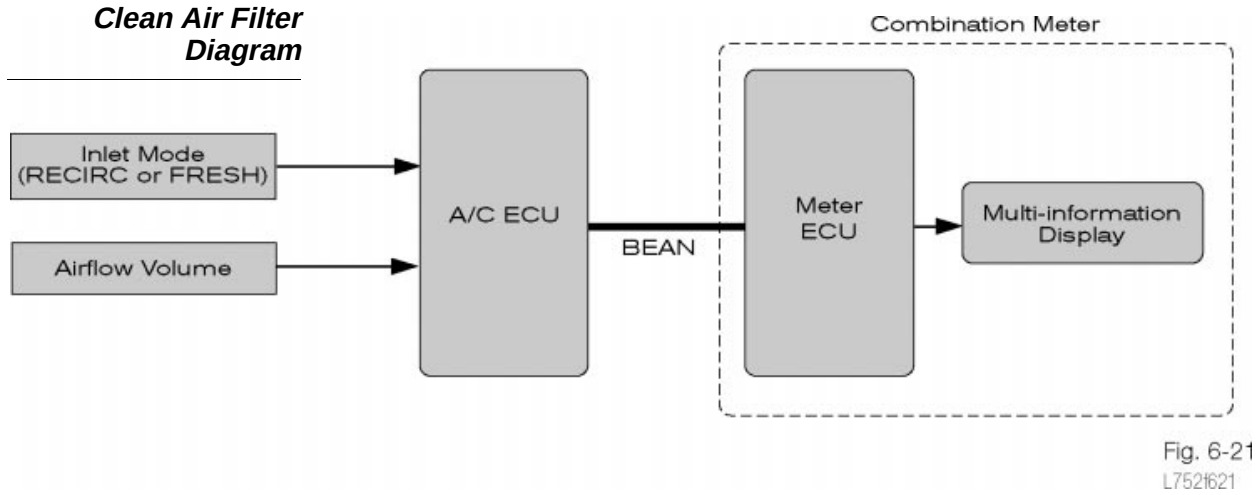

Fig. 6-21
L752f621

Automatic Recirculation Control

The automatic recirculation control system uses a smog ventilation sensor that detects harmful elements such as CO, HC and NO_X in the air outside the vehicle. The system automatically switches the air inlet modes **(FRESH → RECIRC → FRESH)** according to the level of concentration of these elements.

Automatic Recirculation Control

- Air Inlet changes from outside to recirculate.

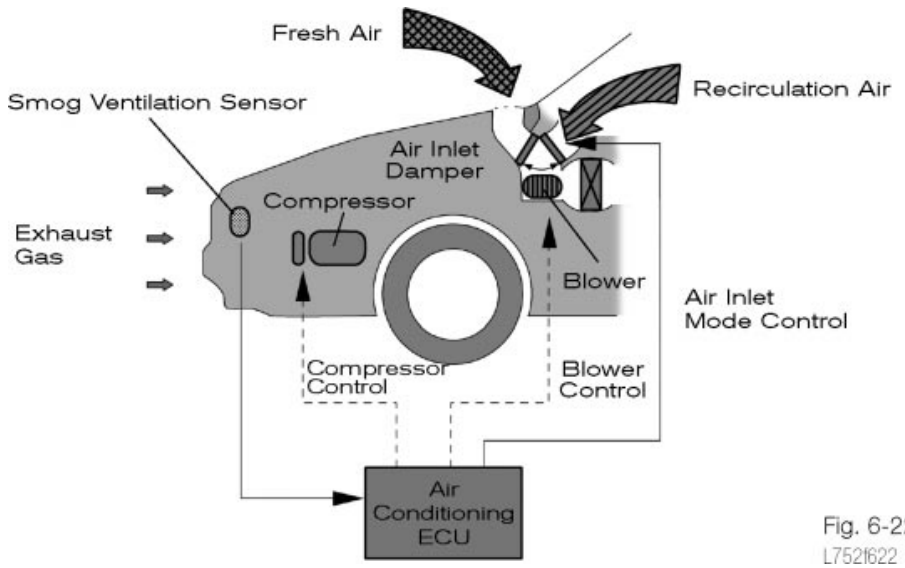

Fig. 6-22
L752f622

Automatic Recirculation Control modes include:

a. Normal Operation
When the air inlet mode is selected in the automatic mode, the A/C ECU automatically analyzes the air quality for CO, HC and NO_X, then switches the air inlet to the RECIRC or FRESH air mode. This ensures the maximum cooling performance in hot weather and prevents window fogging in cold weather. In addition, when the automatic mode is selected, the A/C ECU switches the compressor ON. To allow the smog ventilation sensor to warm up, automatic switching of the air inlet modes is delayed 30 seconds after starting the engine.

b. Automatic Internal Air Cool Down Operation
When the air inlet mode is in the automatic mode and the air temperature inside is high, the A/C ECU switches the air inlet mode to the RECIRC mode in order to reduce the internal air temperature.

c. Automatic External Air Fogging Prevention Operation
When the air inlet mode is in the automatic mode and the blower or compressor is turned OFF through the manual operation of the switch or through automatic control, the A/C ECU switches the air inlet mode to the fresh air mode.

When the outside air temperature is low, the A/C ECU automatically switches the air inlet to the fresh air mode to reduce window fogging.

NOTE

- The smog ventilation sensor cannot detect elements such as smoke from a bonfire, factory exhaust, foul or animal odors, or dirt and dust particles.
- Depending upon the wind direction, the smog ventilation sensor may not be able to detect exhaust gas elements which may enter the vehicle.

Rear Air Conditioning

Some Lexus vehicles contain a separate rear air-conditioning system to provide additional temperature control for rear passengers. The A/C compressor supplies refrigerant to a separate A/C assembly mounted behind the rear seat area. This unit also may contain a solar sensor mounted on the package tray, a separate clean air filter and a cool air box. The cool air box is located in the back portion of the rear center armrest.

A control allows conditioned air from the rear A/C unit to flow around this container space.

Rear A/C Unit

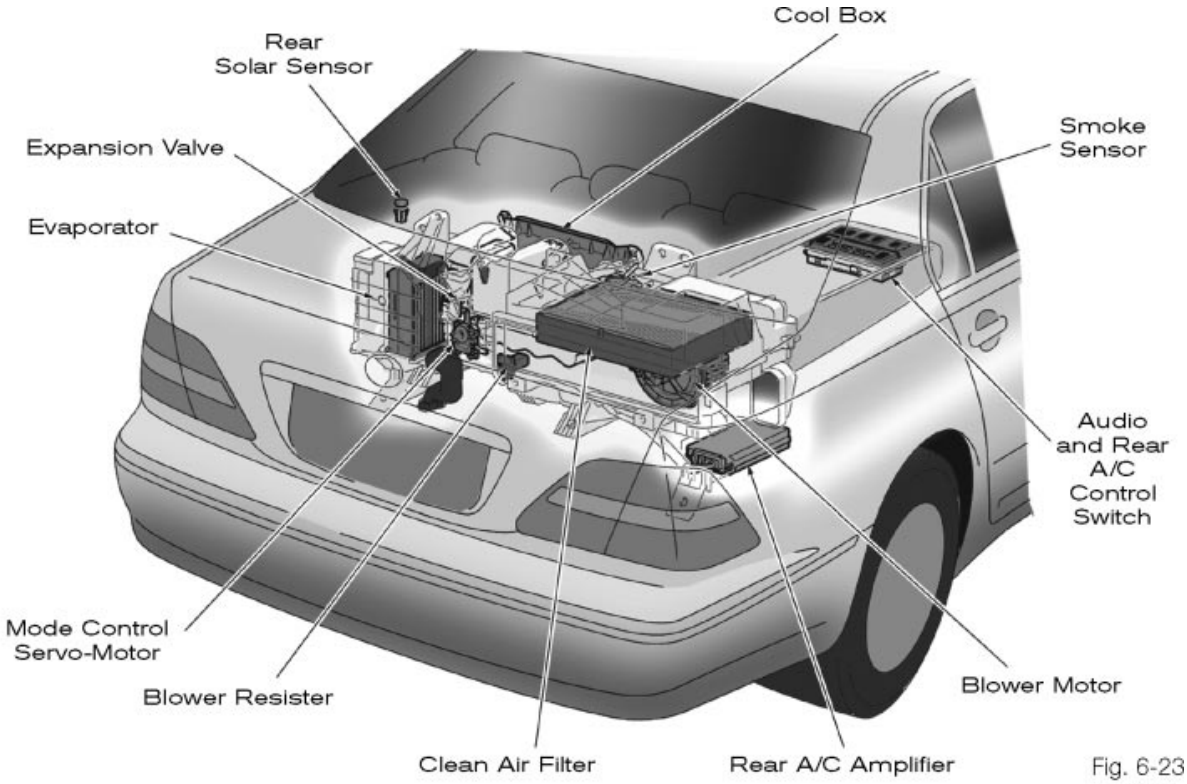

Fig. 6-23
L752f623

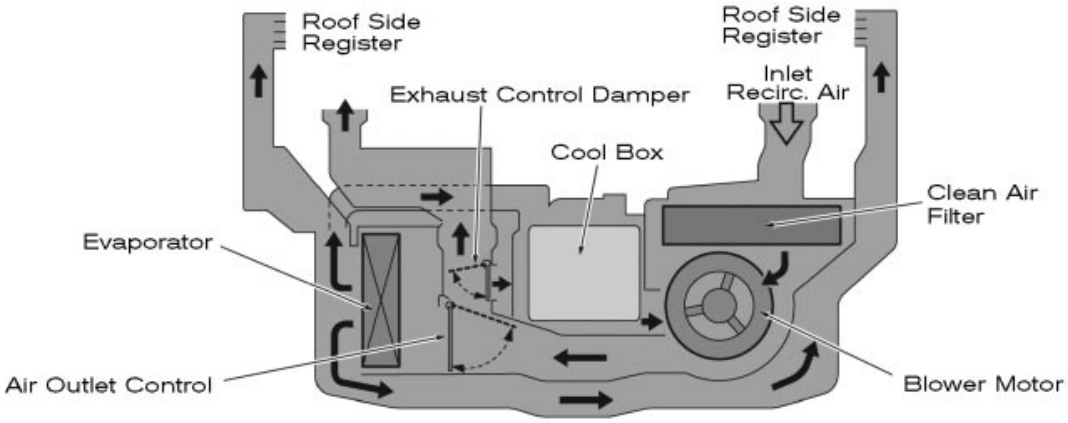

Fig. 6-24
L752f624

Control Damper	Control Position	Operation
Air Outlet Control Damper and Exhaust Control Damper	Air Purifier ON (FRESH Mode)	Cleaned air is discharged from the air vent in the luggage compartment.
	Air Purifier ON (RECIRC. Mode)	Clean air flows out of the dissipation grille.
	Rear Air Conditioning ON	Air flows out of roof side register.

Air Quality Control

This control is linked to automatic recirculation. It operates the rear air conditioner and air purifier blower motor to improve the efficiency of the air purifier.

Air Quality Control System Diagram

- Smog sensor in front grille.
- Smoke sensor in rear seating area.

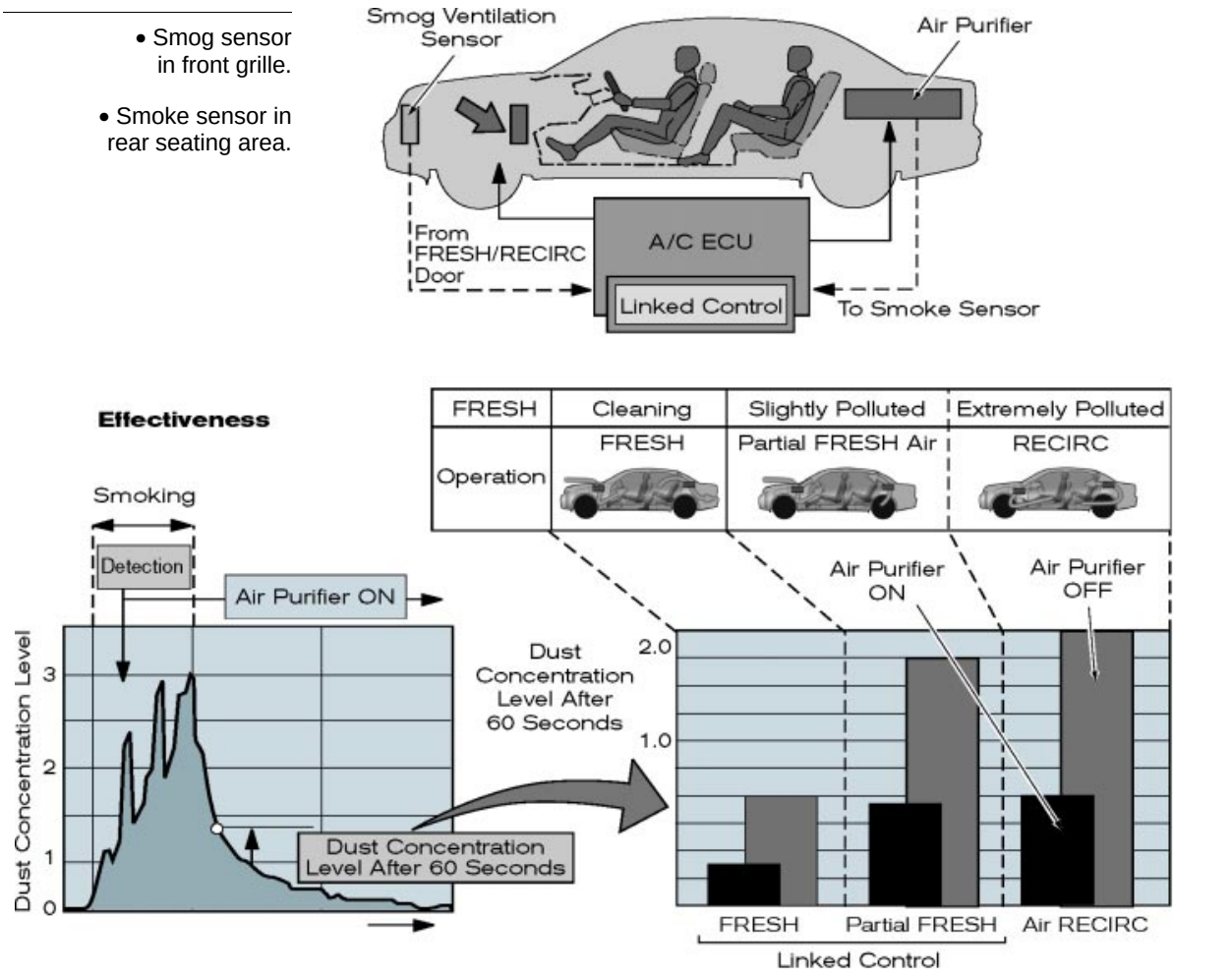

Fig. 6-25
L752f625

Notes

Section 7

Automatic Temperature Control Diagnosis and Repair

Display	Diagnosis
00	All sensors are normal
11	Open or short circuit in room temperature sensor circuit
12	Open or short in ambient temperature sensor circuit
13	Open or short circuit in evaporator temperature sensor circuit
14	Open or short circuit in water temperature sensor circuit
21*	Open or short in solar sensor circuit
22*	Compressor lock detected
23*	Refrigerant pressure is either too high or too low
31	Abnormal air mix servo-motor potentiometer output voltage
32	Abnormal air servo-motor potentiometer output voltage
33	Abnormal air outlet servo-motor potentiometer output voltage
41	Abnormal air mix servo-motor operation
42	Abnormal air inlet servo-motor operation
43	Abnormal air [illegible] operation

Lesson Objectives

1. Perform various methods of testing an auto A/C system.
2. Retrieve auto A/C diagnostic codes from a vehicle.
3. Perform Sight, Sound and Touch Diagnostic Checks.
4. Perform various methods of testing auto A/C system components.

Diagnosis of Automatic A/C Systems

The most common automatic A/C system malfunctions tend to be the result of basic air conditioning problems. These problems include:

- Refrigerant circuit, including leaks and inoperative components.
- Basic electrical malfunctions including open fuses, disconnected or shorted wires and inoperative switches.

Just as with a conventional A/C system, a malfunctioning compressor clutch can be caused by a number of reasons. In addition to the items listed above, check the following circuits against published specifications:

- Evaporator thermistor
- Under-and-over pressure safety switches
- Connections to the ECU
- The wiring to and inside the clutch, and the coil ground
- The clutch control circuit of the amplifier

With such a range of input signals affecting system operation, it is often easiest to test each circuit at the amplifier terminal. When the amplifier is accessed, each circuit can be back-probed with voltmeter probes at the main connector and quickly identified as “OK” or “NG” based on values in service publications.

Diagnosis of an A/C complaint, even Auto A/C malfunctions, should always begin with the “sight, sound and touch” checks of the refrigerant system. Follow with a performance check using A/C pressure gauges to determine charge level, operation of the compressor and other components.

- When the refrigerant system is fully operational and a mechanical malfunction is present, the automatic A/C circuit itself could cause variations between the desired temperature and the temperature at the outlets.
- Excess resistance in the sensor circuits will result in colder-than-desired temperatures.
- Each servo-motor provides a signal to the amplifier to confirm its position. If the internal potentiometer is inoperative, the system will be unresponsive.

Diagnosis Process

Lexus automatic A/C systems include circuits in the ECU to detect, record and display codes for faults for various sensors, actuators and circuits of the system. Operating some switches on the air-conditioning control panel reveals any stored malfunction code. The self-diagnostic codes remain stored, even when the ignition is switched OFF.

Self-Diagnosis Functions

See Vehicle Repair Manual by model for specific procedures and DTC numbers.

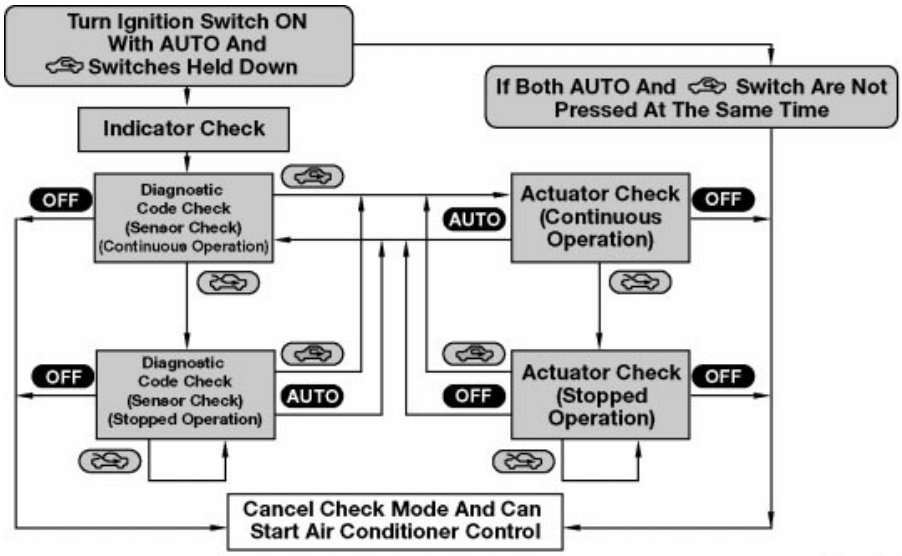

Fig. 7-1
L752I701

A self-diagnosis system can perform the following functions:

- **Compressor Lock** – If the compressor shaft locks up during A/C operation. The A/C switch indicator will blink.
- **Indicator Check** – Tests all indicator lights and buzzers of the automatic A/C control panel four times (switch the ignition ON while pressing and holding the AUTO and RECIRC switches).
- **Diagnostic Code Check** – Displays code numbers with the temperature display of the automatic A/C control panel. A chart in the *Vehicle Repair Manual* assigns a code number to a specific input (sensor) or output (actuator) circuit. In addition, the chart refers to a page to check the circuit.

  Note the following details:

  1. For **current** faults, the buzzer sounds when the code is displayed.
  2. **Past** faults that have been stored in memory, but are not currently present will display the code number without the buzzer.
  3. Faults in the solar sensor or compressor lock sensor circuit are **not** kept in memory after the ignition is switched OFF.

A/C Sensor Check Chart

See Vehicle Repair Manual for DTC numbers.

Display	Diagnosis
00	All sensors are normal
11	Open or short circuit in room temperature sensor circuit
12	Open or short in ambient temperature sensor circuit
13	Open or short circuit in evaporator temperature sensor circuit
14	Open or short circuit in water temperature sensor circuit
21*	Open or short in solar sensor circuit
22*	Compressor lock detected
23*	Refrigerant pressure is either too high or too low
31	Abnormal air mix servo-motor potentiometer output voltage
32	Abnormal air servo-motor potentiometer output voltage
33	Abnormal air outlet servo-motor potentiometer output voltage
41	Abnormal air mix servo-motor operation
42	Abnormal air inlet servo-motor operation
[illegible]	Abnormal air [illegible] operation

Fig. 7-2

- **Actuator Check – Test Recirc Control.** Press the **REC** switch to begin the test sequence for actuators. This process causes the system to engage eight or 10 different combinations of fan speed, distribution, temperature and intake modes in a preset sequence. The steps can be advanced manually by repeatedly pressing the **UP** (▲) switch. The *Vehicle Repair Manual* includes a chart showing the conditions for each of the steps.

A/C Actuator Test Function Chart

- See Vehicle Repair Manual by model for specific conditions.

Step No.	Display Code	Conditions					
		Blower Speed	Airflow Vent	Air Inlet	Air Mix Damper Position	Magnetic Clutch	Water Valve VSV**
1	0	OFF	Face	Fresh	Cool Side (0% open)	OFF	OFF
2	1	1	↑	Fresh/Recirc.*	↑	↑	↑
3	2	↑	↑	Recirc.	↑	ON	↑
4	3	3	Bi-level	Fresh	Cool/Hot (50% open)	↑	ON
5	4	↑	Foot II	↑	↑	↑	↑
6	5	4	Foot I	↑	Hot side (100% open)	↑	↑
7	6	↑	Foot/Def.	↑	↑	↑	↑
8	7	5	Def	↑	↑	↑	↑

*Indicator light for "fresh ( )" mode goes on.
**Servo-motor controlled, some vehicles.

Fig. 7-3
L752f703

Testing Sensor Inputs

To review, the in-car ambient, coolant and evaporator temperature sensors are all **Negative Temperature Coefficient (NTC) thermistors,** so their resistance rises as the temperature decreases.

Test procedures and specifications for each circuit are in the *Vehicle Repair Manual*. Many automatic A/C sensors are tested while **unplugged** using an ohmmeter. Some circuits can be tested at the connector nearest the sensor. In other cases, you can remove the A/C control panel to access the multipin connectors on the back of the panel.

The test values for thermistors are described in a chart or a graph that shows the resistance values at different temperatures. As a rule of thumb, almost all **NTC thermistors** have a room temperature value of 1,500 – 2,000 ohms (1.5K – 2KΩ). Compare the conditions and the ohmmeter display with the table or graph.

Thermistor Test With Ohmmeter

Resistance increases as temperature decreases.

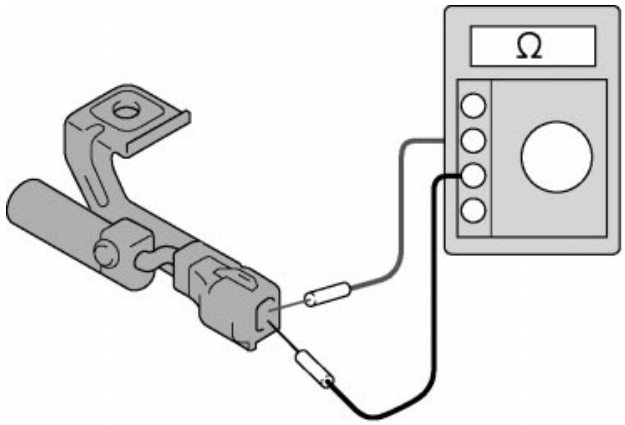

Fig. 7-4
L752f704

This system contains a “fail-safe” mode that allows it to operate even when a primary sensor circuit has malfunctioned. In the following illustration, consider how the system might respond to an open circuit in one of the temperature sensor circuits:

- An open circuit has a resistance of infinite ohms (∞Ω).
- Very high resistance from an NTC might indicate an extremely cold temperature. The system might be expected to respond by producing maximum heat until the interior temperature equals the preset temperature. However, this countermeasure will never happen.

To avoid this, the A/C ECU may substitute a fixed value for an out-of-range sensor circuit. This would allow the system to continue operation with reduced responsiveness.

Open in Auto A/C Sensor Circuit

ECM defaults to fixed value in open circuit.

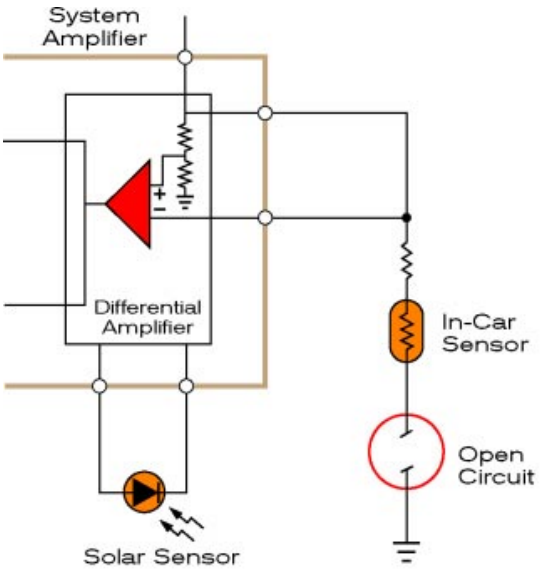

Fig. 7-5
L752f705

Testing the Solar Sensor

Alternately cover, then illuminate the sensor while the system is in the **AUTO** mode. When illuminated (not covered), the fan speed should increase noticeably and the outlet temperature should decrease slightly.

With a multimeter, test the solar sensor with a bright light. This decreases its resistance and increases the voltage when checked at the harness connector.

Solar Sensor Test With Ohmmeter

- Some solar sensors are dual action (driver/passenger).
- Two DTC (21/24) numbers for dual type.

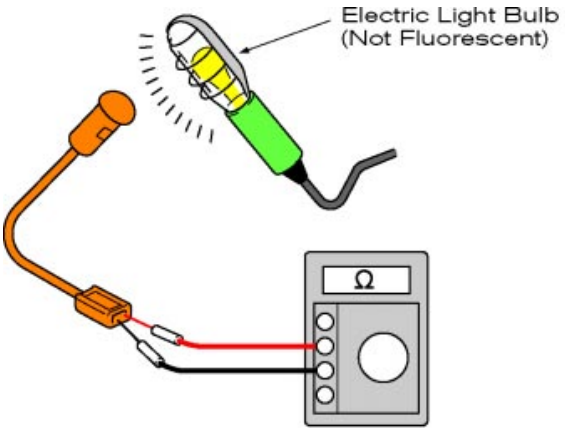

Fig. 7-6
L752f706

Testing Servo-Motors

During a diagnostic test of system actuators, one or more operational modes may not respond correctly. The diagnostic test will direct you to test specific actuators. The test will be one of two types: Functional and Circuit.

A Functional Test consists of applying battery voltage across the motor terminals of the servo-motor harness connector. The arm motion should be smooth to the end of its travel. With reverse polarity, the arm should move smoothly in the opposite direction.

Servo-Motor Test

- Position changes with power applied and change of polarity.

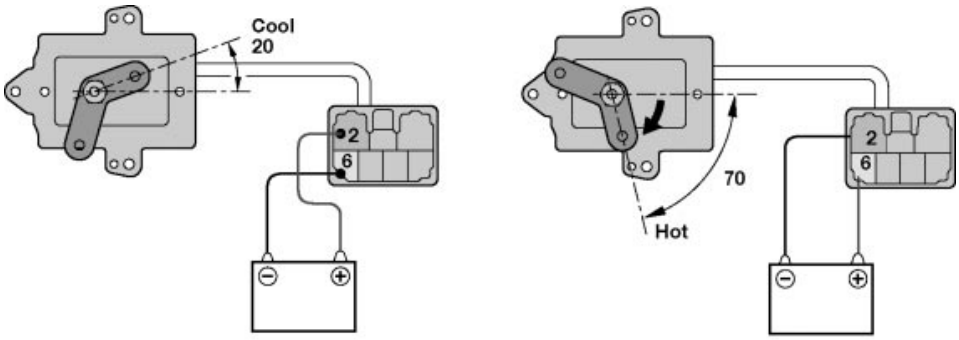

Fig. 7-7
L752f707

A potentiometer is built into some servo-motors so the ECU can determine the arm position of each one. These circuits are important for proper system operation. The variable resistor can be measured with an ohmmeter as the servo-motor is energized during the Functional Test described above.

Servo-Motor Test

Feedback signal to ECU that door has moved.

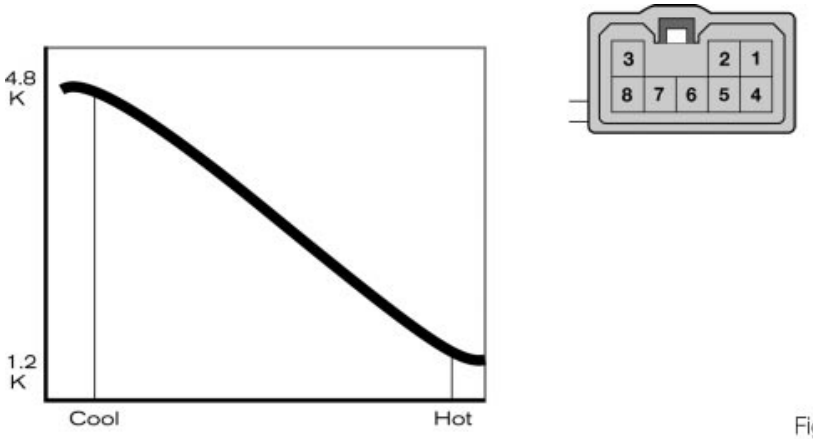

Fig. 7-8
L752f708

Automatic A/C System Repair Techniques

Due to similarities between the refrigerant and control systems among different automatic A/C systems, most complaints can be diagnosed using standard A/C system tools and techniques. Take all appropriate measures in regard to personal safety around pressurized gases and electrical devices. Observe standard procedures for refrigerant recovery, recycling, evacuation and charging.

Automatic A/C systems may require wiring harness repairs, particularly following a collision. Since these systems sense temperature conditions by looking at electrical resistance, proper wiring repairs are very important to system operation. Be sure to use the components and procedures of the Lexus Wiring Harness Repair Kit to avoid adding excess resistance to the automatic A/C circuit.

A/C System Odors

A/C system odors are a common complaint among users, especially after start-up. Odors are primarily caused by one of two things:

1. Dirt or microscopic particles which are trapped in the evaporator, then later blown into the vents. This results in a “musty” or “stale” odor.
2. **Microbes** growing on the evaporator surfaces. These are later blown into the vent ducts. Microbes are small living bacteria which are carried into the evaporator case, then grow in the warm, moist environment. The Xenon tube in some rear A/C systems helps reduce these microbes.

There is no permanent mechanical repair for either type of odor. Replacing the evaporator or cleaning it with a strong chemical is only a temporary fix. The driver must change how the system is used.

To avoid evaporator odor, operate the system in the **FRESH** mode rather than in **RECIRC.** This allows a flow of clean, fresh air over the evaporator. The compressor should be switched **OFF** with the A/C switch while the fan runs for several minutes before shutting off the engine. In addition, park the vehicle with the windows slightly open with the system in the **FRESH** mode to allow the evaporator to dry out.

Clean Air Filter

- Located behind Glove Box.

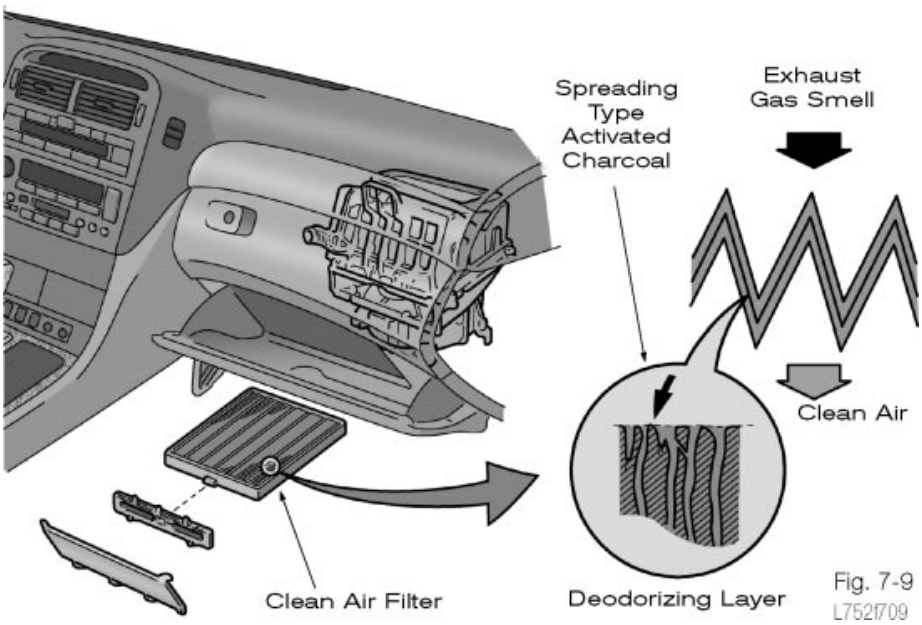

Fig. 7-9
L752f709

Late model Lexus vehicles have a replaceable fabric air filter that prevents microbes and dust from entering the system and settling on the evaporator. Positioned upstream (in front) of the evaporator, the filter fibers have a static charge to attract small particles to the filter surface. In addition, some models have a rear filter.

The rear A/C system contains a filter that contains highly charged fibers and activated charcoal to help purify as well as remove dust and smoke particles from the air.

Rear Clean Air Filter and Purifier

- Behind rear seat in trunk area.
- Do not touch or look at tube.

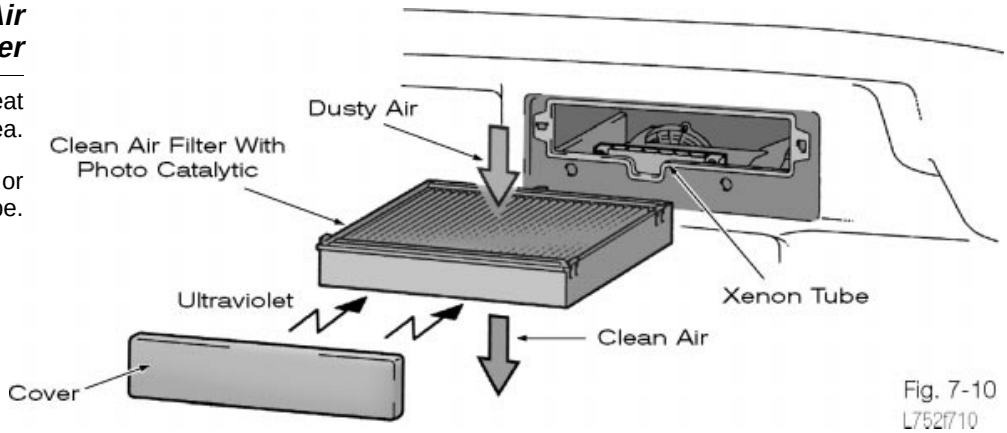

Fig. 7-10
L752f710

Some rear A/C filter cases have an Xenon tube for mildew reduction that illuminates whenever the key is ON.

WARNING: Do NOT touch or look at the Xenon tube when it is illuminated.

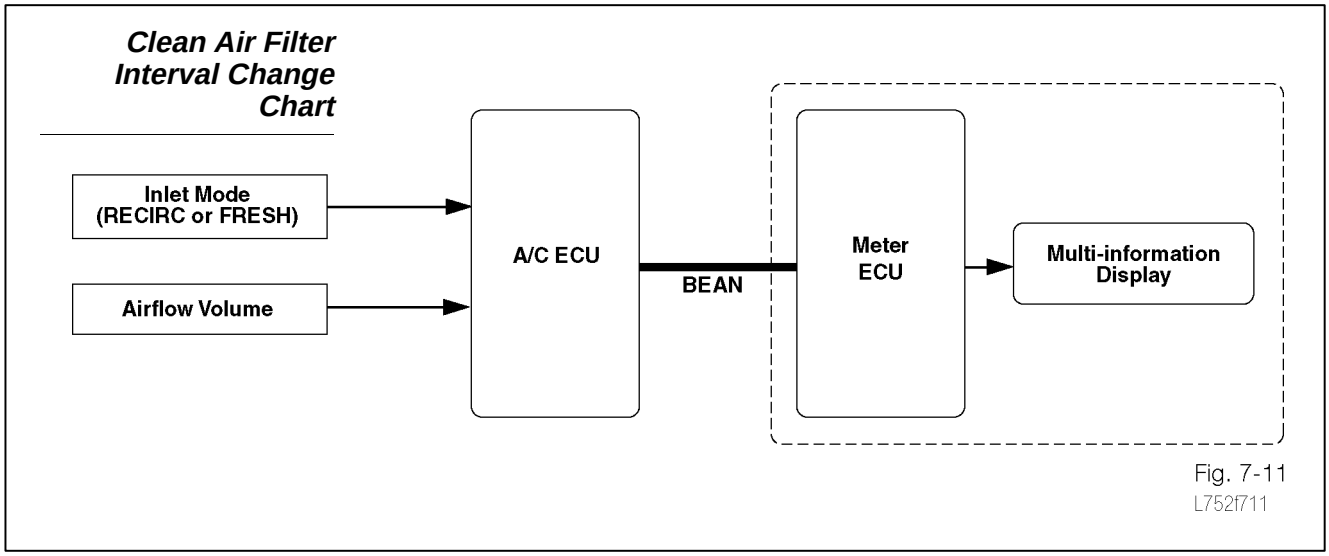

Fig. 7-11
L752f711

If air volume is low, the air filter could be clogged. Replace the filter. Do not attempt to clean it. If the filter replacement light illuminates, press the OFF button for several seconds after replacement of the filter.

Diagnosing the Automatic A/C System

As described in Section 6, an NNC system in some Lexus vehicles attempts to simulate human control of the HVAC system using input sensors, a sophisticated A/C ECU and output actuators. Vehicles with such systems also contain a self-diagnosis feature.

The A/C ECU has a self-diagnosis feature that stores operation failures in memory. DTCs can be displayed by operating switches on the A/C control panel. DTCs remain in memory even when the ignition is OFF.

Function	Description
Indicator Check	Checks indicator lights and temperature setting display.
Sensor Check	Checks the past and present malfunctions of the sensors and clears past malfunction data.
Actuator Check	Checks against actuator check pattern to make sure if blower motor, servo-motors and magnetic clutch are operating correctly according to signals from the ECU. Checks sequence of modes and fan speeds to check airflow from each outlet. Compare with air outlet and airflow chart.

Notes

WORKSHEET 7-1 (IN-CLASS)
ATC Sensors and Controls

Vehicle	Year/Prod. Date	Engine	Transmission

Worksheet Objectives:

Given this worksheet, a *Vehicle Repair Manual*, and a vehicle you will identify the various A/C sensors used in Lexus vehicles and successfully diagnose a sensor malfunction.

Background:

Vehicles with ATC use several sensors to sample the air temperature or airflow in and out of the vehicle. Knowing where these sensors are located and how they look will help you work more efficiently in diagnosing and repairing the system. There are three possible malfunctions that occur with sensor-driven control systems.

- Sensor malfunction
- Control unit malfunction
- Problem in sensor circuit (harness, connector, etc.)

Tools and Equipment:

- *Vehicle Repair Manual* (TIS)

Section 1

Sensor Types	Description
Solar Sensor	A photo-diode component that sends voltage signals to the A/C ECU based on sun load.
Compressor Lock Sensor	A reed switch that sends voltage pulses to the A/C ECU indicating rotation of the compressor; pulses are measured against engine speed to determine if the compressor is rotating.
Room Temperature Sensor	A sensor using a thermistor to indicate changes in the cabin temperature.
Ambient Temperature Sensor	A sensor used to sense the ambient air outside the vehicle using a thermistor.
Evaporator Temperature Sensor	Uses a thermistor to signal the A/C control unit when temperature changes occur in the evaporator.
Engine Temperature Sensor	This signal comes from the ECU and indicates engine temperature during warm-up control.

Use the *Vehicle Repair Manual* to evaluate the condition of various sensors. Always refer to the appropriate *Vehicle Repair Manual* as sensor values change from year to year.

Note: If a sensor is not available on your test vehicle, mark the answer area with "NA," then proceed to the next question.

1. Locate the section in the *Vehicle Repair Manual* that describes the diagnostics for the A/C system for the test vehicle. What page describes various DTCs for the A/C system?

   _____

2. Locate and record the trouble code for the **Compressor Lock Sensor.** _____

3. What happens when the ECU records a compressor lock sensor DTC (22)?

   _____

4. Locate and identify the Compressor Lock Sensor on your vehicle, then use a Digital Multi-Meter (DMM) to determine if the sensor is good.

   Sensor reading: _____

   Good _____ NG _____

5. What does the *Vehicle Repair Manual* suggest if the sensor tests okay but a DTC appears for this problem?

   _____

6. Locate the section in the *Vehicle Repair Manual* to inspect the **Room Temperature Sensor Circuit.**

7. What pages in the *Vehicle Repair Manual* describe this inspection?

   _____

8. What type of equipment is suggested in the *Vehicle Repair Manual* to heat the Room Temperature Sensor in order to inspect the sensor?

   _____

9. List the resistance specifications (low and high) for the Room Temperature Sensor.

   Low _____ High _____

10. What happens to circuit resistance when the sensor is exposed to more heat?

    _____

11. What is the DTC number for the **Evaporator Temperature Sensor Circuit**? _____

12. Place the evaporator temperature sensor in 60ºF water. What is the resistance reading?

_____

13. What type of signal is sent to the control unit when the evaporator temperature sensor is operating?

_____

14. List the two A/C control assembly terminals to check the Evaporator Temperature Sensor.

_____

Summary:

Check DTCs first when you suspect a sensor is not providing the correct input to the system.

Note: It is also important to verify there is actually a malfunction in the system. Customers will often expect something from an Automatic A/C system which it cannot deliver. These complaints are often about airflow, time to cool down or heat, window fogging, or the difference between what they think the system should do versus what it is designed to do.

The bottom line is that you must obtain as much information from the customer as possible. Knowing the exact customer complaint can save you time and money in the long run.

Instructor Sign Off: _____

Notes

ATC Sensors and Controls

Name: _____ Date: _____

Check each category after participating in the classroom discussion and completing this sheet as you are completing Worksheet 7-1 using the ATC Sensors and Controls worksheet in the shop. Ask the instructor if you have any questions regarding the topics provided below:

I have questions

I know I can

Topic			Comment
Purpose of each sensor			
Location of each sensor			
Purpose of compressor lock sensor			
Thermistor changes with temperature			
Locating Sensor Specifications			
Testing Sensors			

Notes

WORKSHEET 7-2 (ON-CAR)
Automatic Air-Conditioning "Self-Diagnosis" Testing

Vehicle	Year/Prod. Date	Engine	Transmission

Worksheet Objectives:

Given this worksheet and a *Vehicle Repair Manual*, you will correctly perform a "self-diagnosis" to retrieve A/C-related Diagnostic Trouble Codes (DTCs) and check the operation of all servo-motors, actuators and sensors of a Lexus Automatic Air Conditioning System.

Background:

Besides receiving inputs from system sensors and controlling actuators, the A/C ECU also displays and stores trouble codes (DTCs) in its memory in order to easily diagnose malfunctions in the system. This exercise will give you practice in displaying and retrieving DTCs.

Tools and Equipment:

- *Vehicle Repair Manual* (TIS)
- Vehicle with Auto A/C

Retrieve Diagnostic Trouble Codes (DTCs)

1. Use the appropriate *Vehicle Repair Manual* as a guide in performing A/C self-diagnosis.

   Vehicle Repair Manual: _____ Page number: _____

2. In the *Vehicle Repair Manual*, what are three checks available on this system under the category, "LIST OF OPERATION METHODS?"

   _____

   _____

   _____

3. Where are DTCs displayed during the manual DTC Check mode?

   _____

4. What two switches are depressed at the same time to access the Indicator Check mode?

   _____ and _____

5. Identify the events that happen in order when entering the Indicator Check mode?

   a. _____

   b. _____

6. What DTCs are in memory?

_____

_____

7. Disconnect the A/C pressure switch connector. What DTC appears? _____

8. What are “hard” codes?

_____

9. How are hard codes erased? _____

Note: Some DTC sensor codes self-clear when the malfunction is corrected.

10. Reconnect the pressure switch connector. What happens? _____

Actuator Test

11. What is the procedure to perform an actuator test?

a. _____

b. _____

12. What page in the *Vehicle Repair Manual* identifies the air volume and air register when selecting various air distribution modes?

_____

13. What do the different size circles indicate in an air distribution chart?

_____

Air Outlet Mode	A	B	C	D	E
	Center Face	Side Face	Rear Face	Foot	Defroster
FACE	◯	◯	◯	–	–
BI-LEVEL	○	○	○	○	–
FOOT	–	○	–	◯	○
FOOT/DEF	–	○	–	○	○
DEF	–	○	–	–	◯

14. What switch do you press to check each register outlet for fan speed and airflow volume?

    _____

15. Ignition OFF.

16. Recheck for stored DTCs. Clear if necessary.

17. Return the station back to its original condition.

Instructor Sign Off: _____

Notes

Automatic Air-Conditioning “Self-Diagnosis” Testing

Name: _____ Date: _____

Check each category after participating in the classroom discussion and completing this sheet as you are completing Worksheet 7-2 using the Automatic A/C “Self Diagnosis” Testing worksheet in the shop. Ask the instructor if you have any questions regarding the topics provided below:

I have questions

I know I can

Topic			Comment
Locating the Code Retrieval procedure			
How to obtain stored DTC in memory			
Determine what DTC indicates			
Checking Solar Sensor			
Perform Actuator Test			
Checking Air Flow from outlets			

Notes

WORKSHEET 7-3 (ON-CAR)
C-Best Settings Using the Hand-Held Tester

Vehicle	Year/Prod. Date	Engine	Transmission

Worksheet Objectives:

Given this worksheet, a Lexus vehicle and the Lexus Hand-Held Tester, you will access the Auto A/C menus and record component details.

Background:

The C-Best Hand-Held Tester provides access into the electronic circuitry of many vehicle systems. Your skill in using this device will help you identify and diagnose A/C-related malfunctions.

Tools and Equipment:

- Lexus Hand-Held Tester
- LS430 Simulator or LS430 vehicle with Auto A/C

Retrieve A/C Data

1. Ignition OFF.
2. Connect the tester to the DLC3 connector on the vehicle.
3. Ignition ON.
4. Select “DIAGNOSIS” from the “APPLICATION SELECT” menu.
5. Select “OBD/MOBD.”
6. Select “Vehicle.”
7. Select “Air Conditioner” from the “OBD/MOBD” menu.
8. Verify DLC3 Connection.
9. From the Diagnostic menu, select “DATA LIST”.
10. Select “All” from the “SELECT DATA” menu.
11. From the DATA LIST, what is the position of the Air Inlet Damper Door (“A/I Damp Pos”)?

    _____

APPLICATION SELECT

1: DIAGNOSIS
2: CUSTOMIZE
3: ECU REPROGRAM

DIAGNOSTIC MENU
AIRCON

1: DATA LIST
2: DTC INFO
3: ACTIVE TEST
4: SNAPSHOT

12. Press the "**Recirc** → **Auto** → **Fresh**" buttons on the A/C control panel in turn, them record the damper door opening percentages from the DATA LIST in each of these modes:

    a. Recirc _____

    b. Auto _____

    c. Fresh _____

    Note: In AUTO mode, the Auto A/C system selects RECIRC or FRESH depending on the set temperature and cooling requirements.

13. What do the letters "D" and "P" on the DATA LIST mean?

    _____

14. "Ambient temperature" is the temperature _____ the vehicle.

15. Engine ON.

    Note: You may have to reset the tester to read the DATA LIST.

16. Place the A/C system in "AUTO," set the interior temperature to 70º F, wait 60 seconds, then record the temperature of the following items from the DATA LIST:

Item	**DATA LIST item**	**Temperature**
Duct temperature -D	DUCT TEMP-D	_____ °F
Duct temperature -P	DUCT TEMP-P	_____ °F
Evaporator temperature	EVAP TEMP	_____ °F
Room (interior) temperature	ROOM TEMP	_____ °F
Ambient temperature	AMBI TEMP	_____ °F

17. Solar Sensor:

    a. What does the solar sensor measure? _____

    b. What is the current status of the solar sensor? _____

c. If the vehicle is in artificial light, shine an incandescent light source (flashlight) at the sensor, then record the results:

_____

d. If the vehicle is in direct sunlight, place a shield over the sensor, then record the results:

_____

18. Select Customize menu and Air Conditioning _____

19. List three A/C functions that can be customized with the Hand-held Tester

_____

_____

_____

20. What is “Temp shift” and “Sensitivity” options? _____

21. Engine OFF, Ignition OFF.

22. Switch the Hand-Held Tester OFF, then remove from the vehicle.

23. Return the work station to the same condition as you found it.

Instructor Sign Off: _____

Notes

C-Best Settings Using the Hand-Held Tester

Name: _____ Date: _____

Check each category after participating in the classroom discussion and completing this sheet as you are completing Worksheet 7-3 using the C-Best Settings Using the Hand-Held Tester worksheet in the shop. Ask the instructor if you have any questions regarding the topics provided below:

I have questions

I know I can

Topic			Comment
Connect the hand-held tester			
Select C-Best menu			
Select “customizing” feature			
Select DATA LIST			

Notes

Section 8

Climate Control Seats

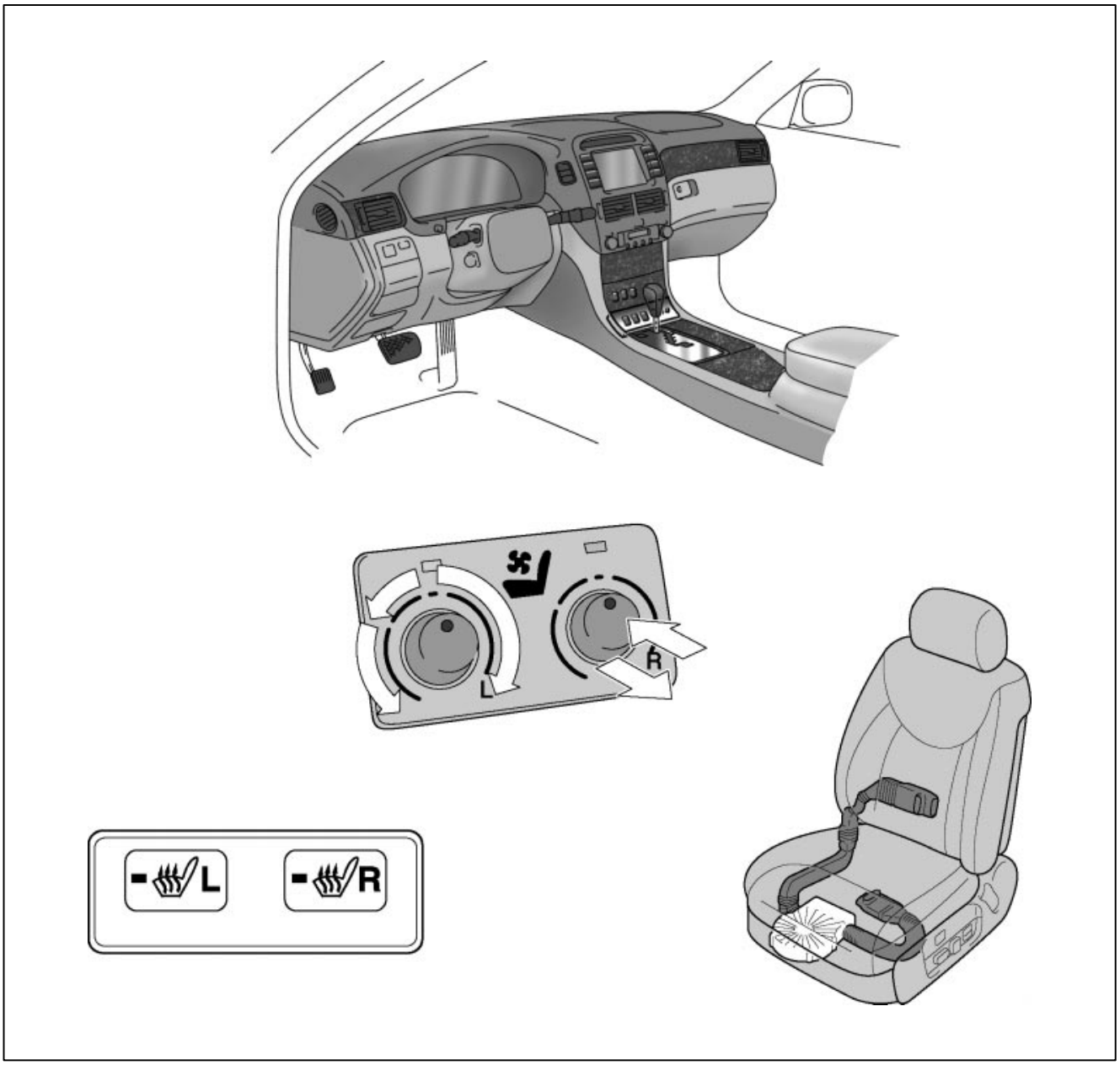

Lesson Objectives Identify the controls and demonstrate the operation of Climate Control Seats.

Climate Control Seats

The seats on some Lexus vehicles contain a climate control feature to provide additional heating and cooling comfort for both front and back seat occupants. When heat is needed, a fan-equipped heater circulates warm air through the seat. When lower temperatures are desired, the system reduces the air temperature.

Heating and cooling is provided by a thermoelectric module. The following illustration shows the basic configuration of a thermoelectric module in the seat cushion.

Climate Control Seat Thermoelectric Module

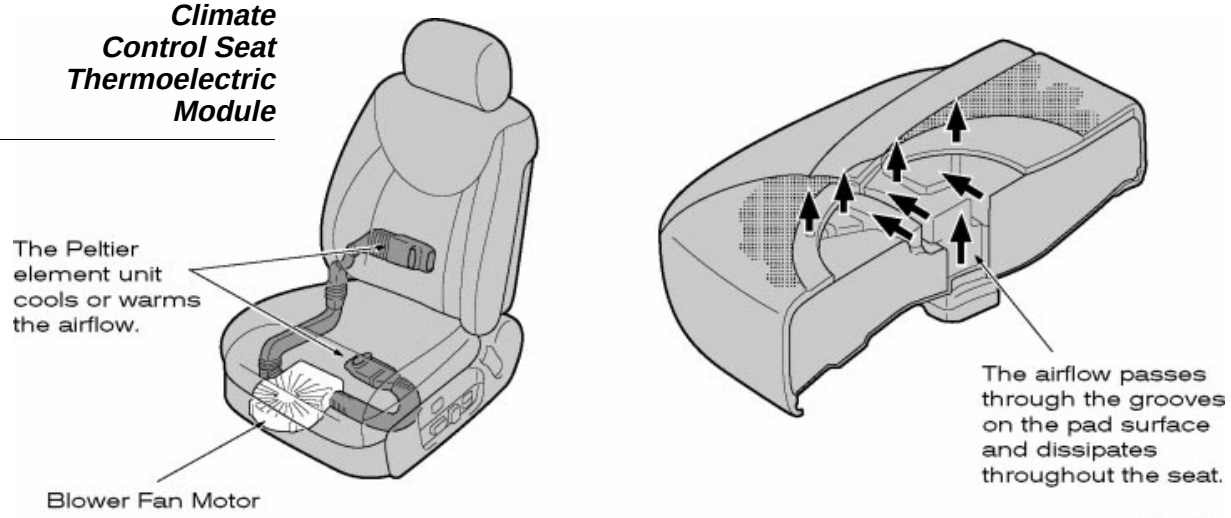

Fig. 8-1
L752f801

Thermoelectric Module

The thermoelectric module uses a principle known as the “Peltier” Effect, a phenomenon discovered by a French watchmaker during the 19th century. It is a solid-state method of heat-transfer generated by using dissimilar semiconductor materials. The role of liquid changing to a vapor to absorb heat is replaced by using two different conductors. The cold junction (evaporator surface) becomes cold by absorbing energy from the electrons that pass from one semiconductor to another. The battery is the energy source to move electrons from one semiconductor to the other.

There are heat sinks on both sides of the Peltier element. These heat sinks function as conventional condenser and evaporator fins. They absorb heat on the cold side and discharge accumulated heat energy on the hot side of the system. The hot and cold side of the Peltier element changes by simply changing battery polarity (i.e. changing direction of current flow). The ECU controls the current flow direction and a fan motor inside the cooling/heating unit.

Climate Control Seat and Control Switch

8-position control switch:

3 Warm

3 Cool

1 Fan only

1 OFF

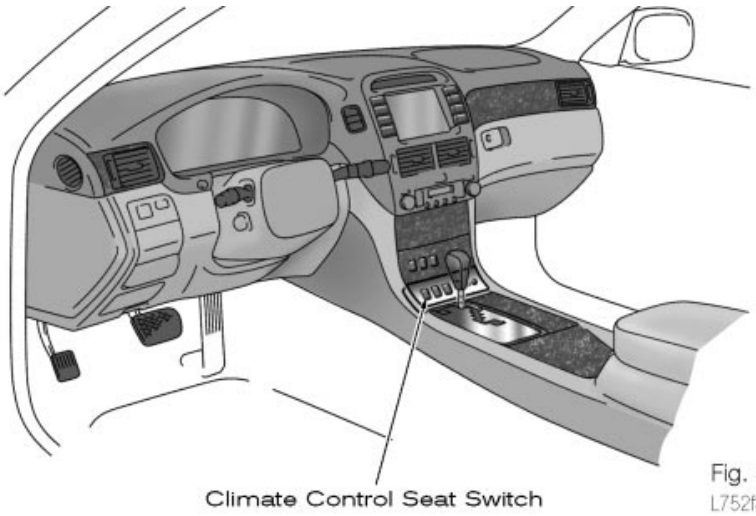

Fig. 8-2
L752f802

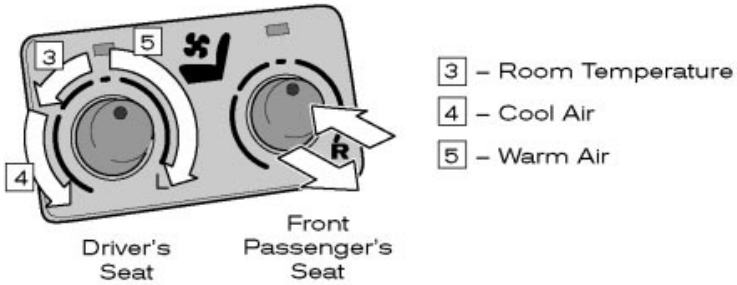

Fig. 8-3
L752f803

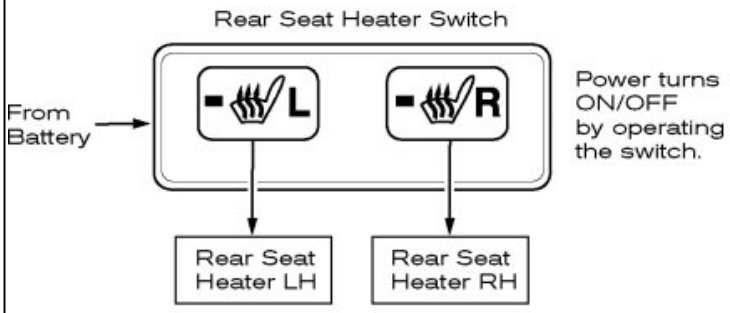

Fig. 8-4
L752f804

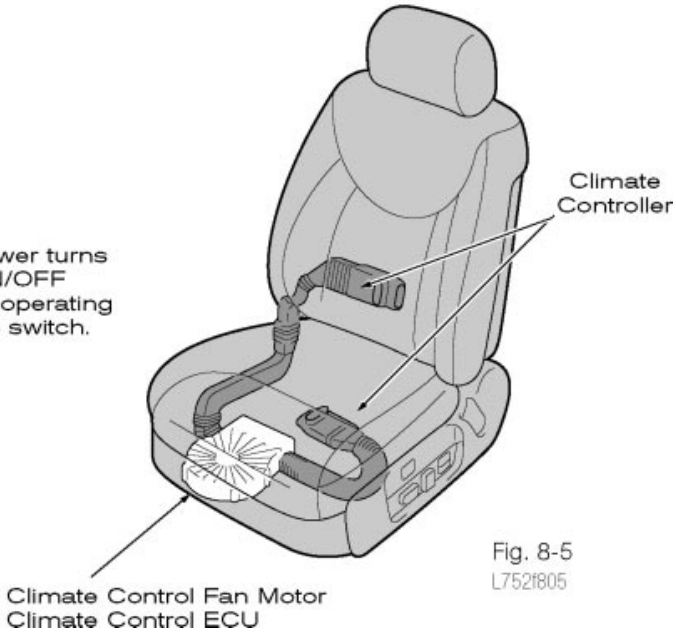

Fig. 8-5
L752f805

Ambient cabin air circulates through the intake filter and through both plates (hot and cold) of the Peltier unit. The airflow over the plates leads to two separate duct tubes. Depending on the polarity, the ducts carry either hot or cold air. The temperature is controlled by fan speed as well as voltage polarity supplied to the Peltier element. A sensor in the seat monitors the air temperature.

Climate Control Seat Characteristics

Item	Characteristic
Full Power	Not available if rear seat heater activated
Air Circulation	Air passes through perforated holes in seat material
Airflow	One way, only volume changes
ECU	Controls current flow to heating element, controls fan speed
Switch Settings	8 positions: 3 for cool, 3 for hot, fan only, system OFF
Temperature Range	Cold: 89º F (32º C), Hot: 102º F (39º C)
Heating Areas	Seat cushion and seat back
Default Fan Speed	If MAX COOL for 15 minutes, system reduces to next step, fan speed to position 2

Climate Control Seat System Operation

Control	Driver	Front Passenger
Normal Control	○	○
Power ON: Full Power Control*	○	○
Engine Idle-Up Output Control	○	–
Rear Seat Heater Operation Power-Down Control	○	○
Fail Control	○	○

* Power ON, Full Power Control

This control outputs maximum voltage to the climate controller and the climate control fan motor for approximately 15 minutes when the following conditions are met:

- Ignition is ON.
- After the Climate Control Switch is ON, the switch volume is then rotated to the MAX HOT or MAX COOL within approximately 10 minutes.
- The rear seat heater is NOT activated.

Climate Control, Seat Timer ON-OFF

Timer reduces current initially then reduces after 15 minutes.

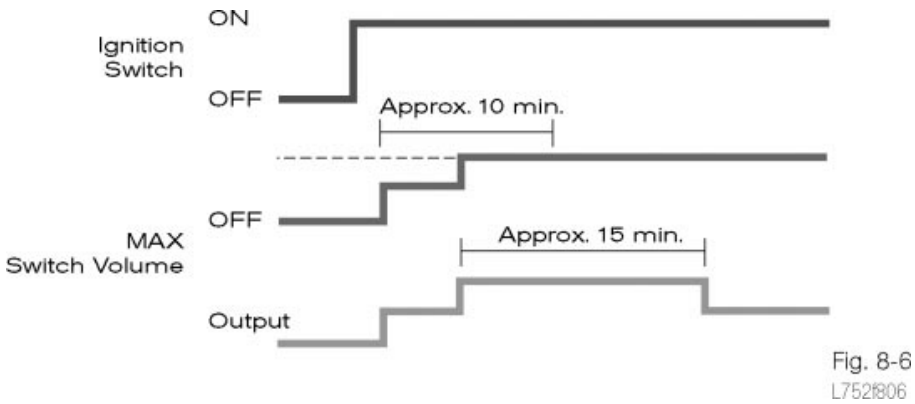

Fig. 8-6

Component Functions

Component	Function
Climate Control Switch	Switches modes as follows: Cool air in 3 stages, airflow and warm air in 3 stages. During failure control, the climate control indicator light flashes to inform the occupant(s) of a malfunction in the system.
Seat Climate Controller	Cools or warms the air from the climate control fan motor upon receiving instructions from the ECU according to the volume setting of the climate control switch.
Temperature Sensor	Detects the surface temperature of the seat back and seat cushion.
Climate Control Fan Motor	Provides airflow to the seat back and seat cushion upon receiving instructions from the ECU according to the volume setting of the climate control switch.
Climate Control ECU	Controls the system based on the signals from the temperature sensor and the climate control switch. While the system is activated, only the driver-side climate control ECU outputs an idle-up signal.

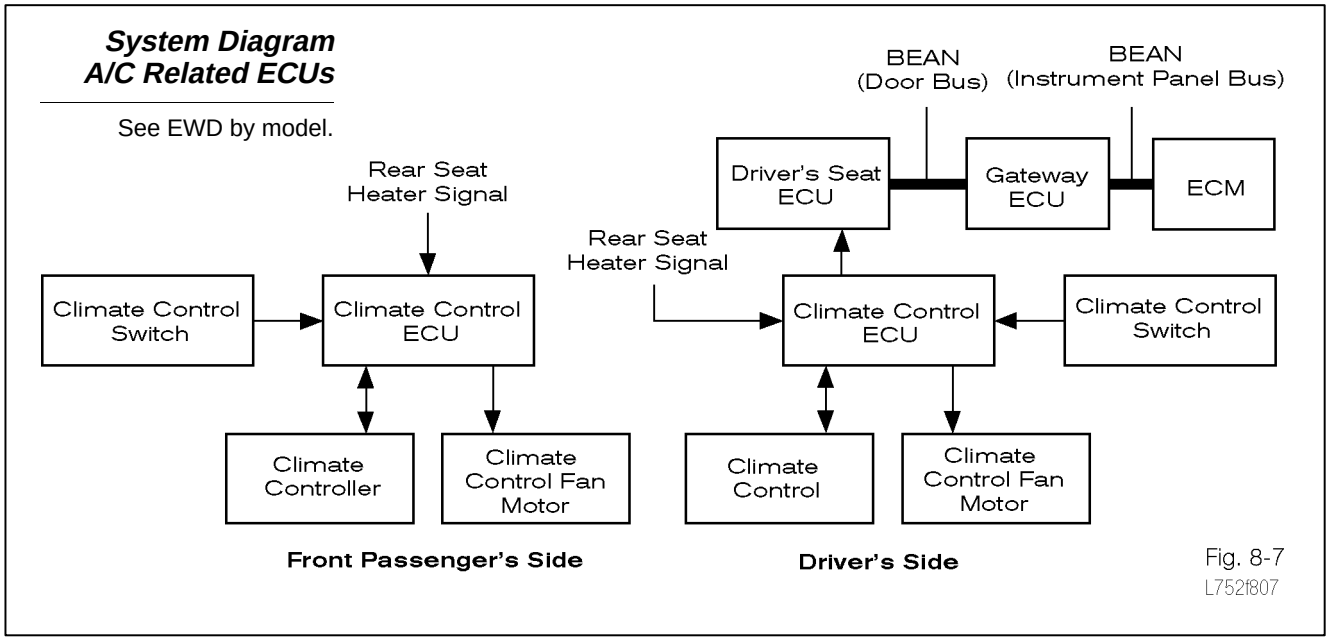

Front Climate Control Seat Diagnosis

For details on the indicator check, sensor check, actuator check and DTC system clearing, refer to the appropriate Lexus *Vehicle Repair Manual*.

Item	Description
Control switch indicator blinks a pattern	System failure: malfunction is detected
Failure patterns: Pattern 1 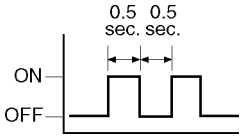	Excessive current in seat climate controller of fan motor
Pattern 2 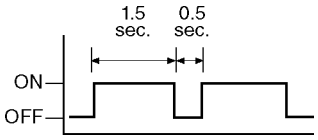	Open/short in climate control switch
Pattern 3 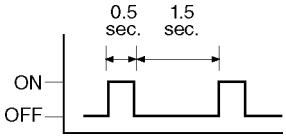	Open/short in thermistor circuit (temperature sensor)
Pattern 4 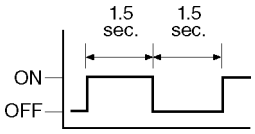	Open/short in climate controller circuit
No indication	Climate control seat does not operate: • Excessive temperature • Temperature rises when set to cool • Voltage drops below 8 volts

Notes

WORKSHEET 8-1 (ON-BENCH)
Climate Control Seat Familiarization

Vehicle	Year/Prod. Date	Engine	Transmission

Worksheet Objectives:

Given a vehicle with climate control seats, a *Vehicle Repair Manual* and a Lexus Diagnostic Tester, you will identify the functions of the new seating system and describe the basic operation of the thermoelectric cooling element.

Background:

The LS430 vehicle contains climate control seats that provide heated or cool air for the occupant. The seats contain a thermoelectric element based on the “Peltier” Effect in order to generate cool and heated air. An ECU controls the element temperature as well as an electric fan.

Tools and Equipment:

- Climate Control seat (demo unit)
- Thermometers (2)
- Digital multimeter
- 12 VDC power source

Section 1

1. Is this system standard equipment on the LS430? Yes / No (Circle one)
2. Does this system operate as a function of the HVAC system? Yes / No (Circle one)
3. How many different temperature positions are there in this system? _____
4. How many fan speeds are available? _____
5. What happens to the default fan speed after 15 minutes on maximum cool? _____

Section 2

6. Connect a 12 volt power source to the Climate Control seat controller.
7. Insert thermometers in the seat and exhaust ducts of the thermoelectric seat cushion module.

8. Switch the system ON as indicated, then measure and record the duct air temperatures:

Temperature setting	Outlet (seat) Temp.	Exhaust Temp.
Max. cool air	a. _____ °F	b. _____ °F
Max. heated air	c. _____ °F	d. _____ °F

(temps. a and d, b and c should be the same)

9. The thermoelectric module changes the outlet temperature according to the direction of

   _____ flow.

10. Connect a digital multimeter to one of the source voltage wires. How much current operates this system?

    Max. Cooling mode: _____ amps

    Max. Heating mode: _____ amps

Section 3

11. Disconnect the harness connector for the seatback thermoelectric module, then observe the control panel.

    How are malfunctions in this system indicated?

    _____

12. Identify the malfunction from the following diagnostic code patterns:

a. _____

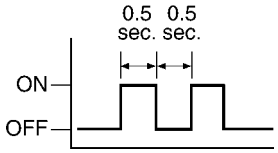

b. _____

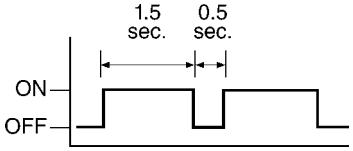

c. _____

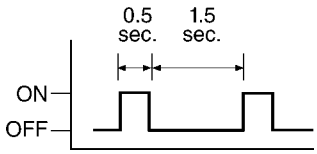

d. _____

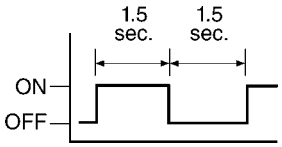

13. If the system does not operate, will the indicator always provide an alert?

_____

14. Return the workstation to its original condition.

Instructor Sign Off: _____

Notes

Climate Control Seat Familiarization

Name: _____ Date: _____

Check each category after participating in the classroom discussion and completing this sheet as you are completing Worksheet 8-1 using the LS430 Climate Control Seat Familiarization worksheet in the shop. Ask the instructor if you have any questions regarding the topics provided below:

I have questions

I know I can

Topic			Comment
Location of major controls			
Control of Heating and cooling functions in Climate Control Seat			
Control of Fan Speed in Climate Control Seat			
Location of Peltier device in the seat			

Notes

Appendix A

Glossary of Terms

A

A/C - Air conditioning; a system which **dehumidifies** and removes heat from the air.

Accumulator - A cylinder that stores **refrigerant** to accommodate changes in the volume necessary to run the A/C system.

Air Mix Control/Mode Control "Film" Dampers - Used on LS models since introduction. Sliding film covers or uncovers air distribution ports to control airflow.

Ambient Temperature - The temperature of the air around the outside of the vehicle.

Ambient Temperature Sensor - An NTC-type thermistor. Sends "temperature" signals to the A/C ECU by the resistance it produces when heated.

Amplifier - Sometimes referred to as the A/C ECU. A device that increases the strength of a signal; in an A/C system, the ECU controls compressor clutch operation based on various input signals. Also referred to as "A/C Control Assembly" and "A/C Amplifier."

ATC (Automatic Temperature Control) - A system that automatically controls HVAC outlet temperature, distribution pattern and fan speed. Also called "climate control" or "automatic air conditioning."

B

B+ - Battery voltage, typically controlled by the ignition switch; the positive terminal of a battery.

Bar - A metric unit for **barometric pressure**, 1 Bar = 1 kilogram per square centimeter = 14.5 psig.

Barometric Pressure - "Atmospheric pressure," pressure exerted on all surfaces of an object as a result of gravity acting upon the mass of the atmosphere, typically 14.5 pounds per square inch of gauge pressure (psig).

BEAN (Body Electronics Area Network) - A multiplexing communications system where multiple signals for various body electrical accessories travel over a common electrical path.

Blend - A mixture of two or more refrigerant gases intended to replace some other refrigerant. (Not recommended)

BTU (British Thermal Unit) - A British unit for measuring the heat energy of a process. One BTU = the heat energy which raises the temperature of one pound (one pint) of water by one degree **Fahrenheit**. One thousand calories = one KiloCalorie (Kcal).

Bus - A common conductor to which multiple circuits connect in an electrical system.

C

Calorie - A metric unit for measuring the heat energy of a process; a common unit for measuring energy (sugar content of food) which will raise the temperature of kilogram (one liter) of water by one degree centigrade. One thousand calories = one KiloCalorie (Kcal).

CAN (Controller Area Network) - A high-speed data multiplex communication system linking control units and systems.

Capillary Tube - A small passage tube and **sensing bulb** contains a refrigerant that expands and contracts according to temperature. The tube carries the temperature "signal" to the **expansion valve**.

Celsius - The name of the scientist who devised the metric temperature scale, see also **Centigrade**.

Centigrade (° C) - A name for the metric scale of temperature measurement which is based on the properties of water. Water freezes at 0° C and boils at 100° C at sea level pressure (1 Bar).

CFC (Chlorine, Fluorine and Carbon) - A family of chemical compounds also called "chlorofluorocarbons" which are suspected of contributing to a decline in the **stratospheric zone**.
R-12 is a CFC . See dichlorodifluoromethane.

Change of State - The process where matter changes from a solid state to a liquid state or from a liquid state to a gas, usually caused by a great transfer of heat or a change in pressure.

Charge - The quantity of refrigerant necessary for efficient heat transfer by an air-conditioning system.

Clutch - A mechanical device for transmitting torque that allows for engaging and disengaging two shafts or rotating members.

Compressor - A pump that increases the pressure of a gas within a closed system.

Condensation - The process where a material changes state from a gas to a liquid following removal of heat or an increase of pressure.

Condenser - A heat exchanger through which a hot gas passes in order to remove heat from the gas and causing it to condense into a hot liquid.

Current - A measure of the flow of electrons through an electrical circuit. The unit of measurement is the "Ampere" or "Amp." See **Ohm's Law**.

Cycling - The process of repeatedly turning a control device ON and OFF based on a prescribed pattern or input signal. See Cycling Clutch.

Cycling Clutch - A system of controlling A/C system operation by controlling the operation of a mechanical drive **clutch** on the **compressor**.

D

Dehumidifying - The process of removing water vapor (moisture) from the air; another result of removing heat from the air.

Desiccant - A chemical or structure that absorbs moisture by forming molecular bonds with water molecules. Located in the **receiver-drier** or **modulator** portion of a subcooling condenser.

Dichlorodifluoromethane - CFC-12 or R-12; a nontoxic, nonflammable chemical compound of chlorine, fluorine and carbon; a colorless, odorless gas formerly used as a refrigerant. Replaced in vehicles by **HFC-134a** (R-134a).

D.O.T. (U.S. Department of Transportation) - Regulates interstate transportation of cylinders containing pressurized gas.

DTC (Diagnostic Trouble Code) - Fault codes generated by the ECU that indicate to service personnel the source of a system malfunction. A self-diagnosis feature that stores operation failures in memory. DTCs can be displayed by operating switches on the A/C control panel. DTCs remain in memory even when the ignition is OFF.

Duct Air Temperature Sensor - Works with solar sensor and ECU to set outlet temperature toward “face” a bit cooler than the “floor” outlet in bright sunlight.

DVV (Double Vacuum Valve) - Device used on vacuum-controlled ATC systems to regulate the pressure within the air mix servo-motor in order to control outlet air temperature.

Dynamic Pressure - The pressures measured from a **stabilized** and operating A/C system.

E

EPR (Evaporator Pressure Regulator Valve) - A bypass flow valve that maintains a consistent pressure inside the evaporator for stable temperature control.

Evacuation - The process of removing all gases from a closed system with a vacuum pump.

Evaporator - A heat exchanger that accepts a spray of hot liquid in order to absorb heat from air surrounding the evaporator. In this process, the liquid evaporates and changes into a gas.

Evaporator Temperature Sensor - A thermistor that outputs an electrical signal according to temperature. This is an input to the A/C ECU which controls the A/C compressor clutch in order to prevent evaporator icing and to regulate cooling temperature output.

F

Fahrenheit - The name of the scientist who devised the British temperature scale in which water freezes at 32° F (0° C) and boils at 212° F (100° C) at sea level pressure.

Fusible Plug - A special bolt with a hollow center filled with a soft, low temperature solder. It is designed to melt under high pressure or high temperature to relieve pressure and protect the system from an explosion. This item is no longer used. A pressure switch now controls system pressure by de-energizing the compressor.

G

Gaseous - The hottest state of matter in which the material is the least dense and is able to flow and expand or contract to fill an area. Heat is absorbed as a liquid changes to a gas.

"Gateway" ECU - A link between systems on a LAN (LS430). It connects the A/C ECU and the rear A/C controls over the AVC-LAN and the rear A/C amplifier over the BEAN (steering column bus).

H

Heat Energy - The force that changes the measurable heat of an object; units for heat energy are the BTU and calorie.

Heat Exchanger - A device that allows heat to be transferred between two liquids or gases without the materials coming into direct contact with each other.

Heat Load - The total of all sources of energy acting to change the temperature of an object. Examples are sunlight, ambient temperature and passenger body temperature.

Heater Core - The heat exchanger that uses engine coolant to heat the air in the passenger compartment.

High Pressure Side - The section of the refrigerant system between the compressor and the expansion valve (including condenser and receiver-drier) where the refrigerant is under high pressure.

HVAC (Heating, Ventilation and Air Conditioning) system.

Hydrochloric Acid - A mild acid that can erode metal components. It forms inside an A/C system when hydrogen from water combines with chlorine from the CFC refrigerant.

Hygroscopic - A property of some liquids to absorb moisture from the air.

I

IDL (Idle) - An input to the ECU when the throttle is at the idle position.

IG (Ignition) - An output signal from the ECU to the ignitor or coil in the ignition system

Impermeable - A barrier that cannot be penetrated. This refers to moisture-proof liners in flexible refrigerant hoses.

Inches of Mercury (in. Hg) - A measure of the strength of a vacuum. This refers to the ability of a vacuum to lift a column of mercury from a reservoir up a narrow tube.

L

LAN (Local Area Network) - A multiplex path for serial data or a wiring path that carries more than one signal to a number of different components in an electrical circuit.

Latent Heat - The additional energy necessary to cause a material to change state. This is fundamental to efficient heat exchange processes.

Liquid - The middle state between a material being a solid or a gas. A liquid can flow to fill a space but cannot expand or be compressed.

Lock sensor - Sends compressor rotation signals to the A/C ECU which then compares compressor speed to engine speed to determine if compressor has “locked.” ECU then disengages the A/C clutch to prevent drive belt failure.

Low Pressure Side - The portion of the refrigerant circuit between the evaporator and the compressor where refrigerant is at a low pressure.

M

Magnetic Valve - An electrically operated solenoid that controls cycling of evaporators and refrigerant flow in dual A/C systems.

Manifold Gauge - A set of two pressure gauges mounted on a common valve body. The manifold has two pressure paths that can be connected together for service operations.

Microbes - Single-cell living organisms (bacteria, mold).

Molecular Sieve - An open-cell structure designed to trap specific materials or compounds; used as a desiccant in A/C systems.

Multiplex - A method of sending and receiving digital signals through a single wire conductor. Often used to control satellite control units from a master ECU.

N

Ne - An engine speed input signal to the ECU.

NNC (Neural Network Control) - An attempt to duplicate the logic functions of a human being to automatically control the various functions of the HVAC system.

Noncondensable Gas - A gas that cannot be easily condensed into a liquid state at room temperature; typically refers to air.

Normally Closed - An electrical circuit or component where the path is connected under “normal” conditions (e.g. engine OFF, cold and stationary vehicle; a resistance of zero until activated).

Normally Open - An electrical circuit or component where the path is not connected (open) under “normal” conditions (e.g. engine OFF, cold and stationary vehicle; a resistance of infinity until activated).

NTC (Negative Temperature Coefficient) - Describes the relationship between temperature and resistance of most automotive thermal sensors.

O

O_2 (Oxygen) - The naturally occurring molecule made up of two oxygen atoms, a clear, odorless gas that is crucial to respiration (breathing) of all animals.

O_3 (Ozone) - The molecule made up of three oxygen atoms, a poisonous, blue gas formed when oxygen is subjected to electrical energy or intense visible radiation (light).

Ohm's Law - A rule which describes the relationship between voltage, current and resistance within electrical circuits, Voltage = Current X Resistance.

One-Pass Machine - A machine that **recycles** refrigerant as it is recovered from a vehicle A/C system. No additional process is necessary before returning the refrigerant to service. See also **Two-Pass Machine**.

Oxygen - The most common element on Earth, present in most organisms and organic chemicals. Essential to life.

P

PAG (Polyalkylene Glycol) - A synthetic lubricant oil (nonmineral-based) developed as a substitute for mineral oil for use with HFC refrigerant R-134a

Peltier Element - Used in climate-controlled seats for heating or cooling. Consists of two different types of metals joined together which either produce or absorb heat depending upon the direction current passes through the element.

Phosgene (Carbonyl Chloride) - A toxic gas also called "mustard gas" produced as a byproduct during combustion of CFC-12. Old, flame-type leak checker is not recommended due to this danger.

Photo-Diode - A single-pole semiconductor which normally blocks the flow of current in both directions; when subjected to light, it allows the current to pass in one direction.

Plenum - A chamber common to several passages, as in the central distribution chamber of a heater blower case or the center passage of a manifold gauge set.

PSI (Pounds Per Square Inch) - A British unit of measure for fluid or gas pressure where zero psi is the absolute vacuum of outer space.

PSIG (Pounds Per Square Inch Gauge) - A measurement of fluid or gas pressure in which zero psi on the gauge is equal to **atmospheric pressure** or 14.5 pounds per square inch.

PTC (Positive Temperature Coefficient) - Describes the relationship between temperature and resistance of common metals.

R

R-12 - See **dichlorodifluoromethane**.

R-134a - See **tetrafluoroethane**.

Radiator - A water-to-air heat exchanger, the final stage cooler of an engine-cooling system.

Receiver-Drier - A combined accumulator and dehydrator in a refrigeration system. Filters impurities from the liquid refrigerant.

Recharging - Filling an A/C system following repair with a quantity of refrigerant necessary for efficient heat transfer.

Recirculate - Recooling of air in an enclosed space, providing increased cooling efficiency.

Reclamation - An off-site process of purifying recovered refrigerant to an “as-new” condition.

Recovery - Removal of refrigerant from an A/C system before repair or service.

Recycling - On-site purification of recovered refrigerant to a standard as defined by the SAE.

Refrigerant - A substance used in a heat exchange system to cool an area based on evaporation and condensation of the refrigerant.

Relative Humidity - A measure of the amount of water vapor in suspension in the atmosphere at a given temperature.

Relief Valve - A non-reusable valve that opens to relieve excessive pressure and thus protect the system from explosion without a total loss of refrigerant; replaces the **fusible plug** on newer A/C systems.

Resistance - A measure of an electrical circuit or a component to resist current flow. See **Ohm’s Law**.

Retrofit - Replacement A/C system components installed on a vehicle in service using non-CFC refrigerant. There are kits available to convert vehicles using R-12 refrigerant to HFC-134a. Usually consists of new HFC-134a fittings, receiver-drier and system identification decals.

S

SAE (Society of Automotive Engineers) - A professional organization that drafts standards for vehicle systems.

Saturated - 100% relative humidity, air is saturated when it holds the maximum possible amount of water vapor in suspension, water will precipitate (condense into liquid and fall out of suspension) at this point.

Sensing Bulb - A small chamber filled with refrigerant and connected to the expansion valve by a thin capillary tube, controls expansion valve operation based on the surface temperature at the outlet of the evaporator.

Series Resistance - An electrical circuit where the current flows through the system components in a single path between power and ground. See **Ohm’s Law**.

Smog Ventilation Sensor - A sensor located in front of the condenser that measures the amount of CO, HC and NOx in the air. In an ATC system, it sends a signal to the ECU to control the air inlet mode to the HVAC system.

Smoke Sensor - A sensor that detects smoke particles in the ambient air and sends a signal to the ECU to control the air inlet control damper and the blower motor (for rear A/C and air purifier).

Solar Sensor - Detects sun load which is 60% of heat entering the vehicle and provides input information to the ECU.

Solid - The coldest of the three states of matter, a solid does not flow to fill a space and cannot be compressed or expanded.

SPD (Speed) - A variable input signal to the ECU representing vehicle road speed.

STA (Start) - An input signal to the ECU when the starter solenoid is energized.

Stabilize - The steady operating condition of an A/C system during heat exchange and pressures and temperatures are within normal operating range.

Static Pressure - The steady pressure within an A/C system that is not operating, units are in PSIG or kg/cm.^{2}

Step-less - Variable blower fan speed control as opposed to 3 or 4 set fan speeds.

Stratosphere - A layer of the Earth's atmosphere 12-20 miles above the Earth.

Stratospheric Ozone - A layer of ozone gas (**O_3**) surrounding the Earth in the stratosphere. Because ozone is blue in color, this layer reflects much of the ultraviolet light from the sun to protect the surface from the radiation.

Systematic - An approach to problem-solving based on a logical process.

T

TAM - Ambient air temperature or outside air temperature measured in the front grille area.

TAO - Outlet air temperature sensor in Auto A/C sends signal to A/C ECU.

Temperature - A measure of the heat quantity present in a material, units are Fahrenheit (English system) or Centigrade (Metric system).

Tetrafluoroethane - HFC-134a or R-134a; a molecule of hydrogen, carbon and fluorine, a clear, odorless, nontoxic gas, a refrigerant for mobile air conditioning systems which has greatly reduced potential to deplete ozone and a low potential for contributing to global warming.

THA - a variable input signal to the ECU that represents air temperature in the air intake passage.

Thermal Capacitance - The ability of a material to resist sudden temperature changes, describes an insulating property.

Thermistor - A solid-state component that changes resistance with changes in temperature. Used as an electrical thermal sensor. A thermistor has a negative temperature coefficient.

THW - An input signal to the ECM/ECU that represents coolant temperature at the cylinder head outlet.

TR (Room Temperature Sensor) - Measures interior temperature.

TSET (Temperature Setting) or target temperature - Selected with Auto A/C systems input to A/C ECU.

Two-Pass Machine - Recovers refrigerant from a vehicle system without recycling. An additional process is necessary before the refrigerant can be returned to service. See also **One-Pass Machine**.

U

UL® (Underwriters' Laboratory) - An independent organization that tests products to verify compliance with safety standards.

Ultraviolet Radiation - Intense blue light that consists of visible and invisible wavelengths. Excessive ultraviolet radiation may cause skin cancer, cataracts and other harm to living things.

V

Vacuum - An extremely low pressure, the absence of any measurable pressure.

Vaporization - A process where a liquid changes into a gas, either due to a drop in pressure or an increase in temperature.

Voltage - A measure of the electrical potential of a circuit, voltage drop within a circuit is defined by **Ohm's Law**. See also **Ohm's Law**.

VSV (Vacuum Switching Valve) - An electrical solenoid that controls the flow of vacuum.

V^{TA} - A variable input signal to the ECM/ECU that corresponds to the angle of the throttle opening.

W

Water Control Valve - A water regulation control valve that controls coolant flow into the heater core. It is controlled by a cable or a servo-motor for outlet temperature control.

1996 MY U.S.A. Maintenance Schedule

Chassis & Body

No.	Items \ Service Intervals	x 1000 miles	1	7.5	15	22.5	30	37.5	45	52.5	60	Months	GS300	ES300	LS400	SC300	SC400	LX450
1	Brake Linings/Drums & Pads/Disks				I		I		I		I	I: Every 12 Months	X	X	X	X	X	X
2	Brake Fluid		Inspect for Leaks				R				R	R: Every 24 Months	X	X	X	X	X	X
3	Brake Lines and Hoses				I		I		I		I	I: Every 12 Months	X	X	X	X	X	X
4	Steering Linkage & Boots				I		I		I		I	I: Every 12 Months	X	X	X	X	X	X
5	Rack & Pinon Assembly/Steering Gear Box				I		I		I		I	I: Every 12 Months	X	X	X	X	X	X
6	Ball Joints & Dust Cover				I		I		I		I	I: Every 12 Months	X	X	X	X	X	X
7	Drive Shaft Boots				I		I		I		I	I: Every 12 Months	X	X	X	X	X	
		Retorque flange			T		T		T		T	t: Every 12 Months	X	X	X	X	X	
8	Transmission Fluid	Other than T−IV			I		I		I		I	I: Every 24 Months		X		X		X
		T−IV			I		I		I		I	I: Every 24 Months	X		X		X	
9	Transfer Case Oil						I				I	I: Every 24 Months						X
10	Front Differential				I		I		I		I	I: Every 12 Months		X				X
11	Rear Differential Oil	Other			I		I		I		I	I: Every 12 Months	X		X	X	X	X
		With LSD										I: Every 12Mo. R: Every 48Mo.						
12	Body Inspection		I		I		I		I		I	I: Every 12 Months	X	X	X	X	X	X
13	Air Conditioning Filter			I	R	I	R	I	R	I	R	I: Every 6 Months R: Every 12 Months			X			
												R: Every 6 Months						
												R: Every 18 Months						
14	Tire Rotation			R	R	R	R	R	R	R	R	R: Every 6 Months	X	X	X	X	X	X
15	Road Test		I	I	I	I	I	I	I	I	I	I: Every 6 Months	X	X	X	X	X	X
16	Driveshaft Bushing Grease						R				R	R: Every 24 Months						X
17	Lubricate Steering Knuckle				R		R		R		R	R: Every 48 Months						X
18	Front Wheel Bearings						R				R	R: 24 Mo.						X
19	Propeller Shaft Grease				R		R		R		R	R: Every 12 Months						X
20	Propeller Shaft Bolt Torque		I		T		T		T		T	I: Every 12 Months						X
21	Charcoal Canister		Required for vehicles in CA, MA & NY only								I	I: Every 72 Months	X	X	X	X	X	X

I: Inspect and correct or replace as necessary **R**: Replace, change, tire rotation or lubricants **T**: Re−Torque

+ : If Equipped

1996 MY U.S.A. Maintenance Schedule

Engine

No.	Service Intervals / Items	x 1000 miles	1	7.5	15	22.5	30	37.5	45	52.5	60	Months	GS300	ES300	LS400	SC300	SC400	LX450
1	Timing Belt		Replace 90,000 miles									R: Every 72 Months			X		X	
2	Valve Clearance										I	I: Every 48 Months	+	+	+	+	+	+
3	Drive Belt						I				I	I: 48m after every 12 m	X	X	X	X	X	X
4	Engine Oil			R	R	R	R	R	R	R	R	R: Every 6 Months	X	X	X	X	X	X
5	Engine Oil Filter			R	R	R	R	R	R	R	R	R: Every 6 Months	X	X	X	X	X	X
6	Engine Coolant						R				R	R: Every 24 Months	X	X	X	X	X	X
7	Exhaust Pipes & Mountings		I		I		I		I		I	I: Every 12 Months	X	X	X	X	X	X
8	Air Cleaner Filter						R				R	R: Every 24 Months	X	X	X	X	X	X
9	Fuel lines/connections, fuel tank vaper vent system hoses & fuel tank band						I				I	I: Every 24 Months	X	X	X	X	X	X
10	Fuel tank cap gasket						I				I	I: Every 24 Months	X	X	X	X	X	X
11	Spark Plugs						R				R	R: Every 24 Months						X
											R	R: Every 48 months	X	X	X	X	X	

I: Inspect and correct or replace as necessary **R**: Replace, change, tire rotation or lubricants

+ : Audible

Accessory Installation Practices

This document is written and maintained by Toyota Motor Sales, U.S.A., Inc. as an aid to defining accessory installation best practices.

Safety

1.1 Eye protection should be worn during any drilling and cutting, and when power tools are used to remove or attach fasteners.

Eye protection should also be used when using any special chemicals (as listed on the first page of the Installation Instruction Sheet) to reduce the risk of these chemicals entering the eye.

1.2 Rechecking of fastener tightness.
For some accessories it is necessary to recheck the tightness of the fasteners securing the accessory, for example – wheel lug nuts, running board bolts, tow hitch bolts etc. Where a recheck is required it will be noted in the Installation Instruction Sheet (either in the Procedure Section and/or the Checklist Section)

1.3 Supplemental Restraint System SRS
Any vehicle equipped with a supplemental restraint system (SRS). Failure to carry out the following procedures listed below could result in possible deployment of airbag, personal injury, or unnecessary repairs to SRS.

1.3.1 Turn the key switch to the LOCK position.
1.3.2 Remove key from ignition switch.
1.3.3 Disconnect the negative battery cable.
1.3.4 Never use a voltmeter to troubleshoot any of the harnesses or connectors to the SRS. Accidentally probing the connectors to the SRS can lead to deployment of the airbag.
1.3.5 SRS wire harness loom/cover is bright yellow in color.
1.3.6 SRS contains a battery backup system; therefore ALWAYS wait for a minimum of 90 seconds after disconnecting the battery negative cable before removal/disassembly of electrical components. (Reference TSB: EL93-001).

Vehicle Protection

2.1 Vehicle should be clean before performing any accessory installation.

2.2 Prepare grille cover, fender cover, seat cover, and floor mat cover as appropriate to the installation area on the vehicle of the accessory before starting installation. Blankets, seat covers, paper floor coverings are suitable for this purpose.

2.3 Do not place any tools on unprotected vehicle surfaces, or leave inside vehicle. Use a tool tray to keep tools separate from the vehicle surface.

2.4 It is recommended that no exposed jewelry (rings, watches etc.), zippers, buttons, rivets, belt buckles or other scratch potential objects be worn. Articles of clothing or jewelry that have the potential to come into contact with the vehicle surface (i.e., generally below the chest) and contain any of the above items should be covered with tape and/or other protective material to prevent scratching of the vehicle.

2.5. Clothing and shoes must be free of grease and dirt to maximize vehicle cleanliness.

2.6 Parts and tool trays should be used for interior installations whenever possible. Parts, tools or trays must not be placed onto unprotected, seats, carpets or trim panels.

2.7 Tools, air hoses and power cords should be free of grease and dirt.

2.8 Blanket should be used to cover engine bay while working on accessory that requires hood to be open (e.g. Hood Protector) to prevent fasteners from being dropped into engine bay.

Vehicle Disassembly/Re-assembly

Panel Removal

3.1 Many panels on the vehicle are held in place with clips. Where the location of this clip is critical it is shown on the figure(s) in the Installation Instruction Sheet. Care must be taken to remove the panel and its clip(s) without damage. Toyota recommends use of plastic (nylon) removal tools, rather than metal and two Toyota Special Service Tools are available:-

Panel Pry Tool #1 Toyota SST # 00002-06001-01
Panel Pry Tool #2 Toyota SST # 00002-06002-01

Panel Protection

3.2. Place all removed parts on a protected surface.

3.3. All work benches, tables, or platforms used for assembly or temporary storage of parts should be carpeted or suitably covered to provide a soft, non-abrasive surface.

Parts Container

3.4 Use a small parts container to keep removed bolts and tapping screws so that they can be reassembled correctly.

Electrical Component Disassembly/Reassembly

Battery Cable

4.1 Unless otherwise stated battery negative terminal must be disconnected and isolated before performing work on any electrical components (i.e. connecting or disconnecting any

electrical connectors, etc.). In some installations fuse removal is used instead of battery terminal disconnection, and will be referred to in the Installation Instruction Sheet.
4.2 Ignition key must be removed from the ignition switch when the negative battery terminal or appropriate fuse is disconnected/removed and reconnected/reinstalled.

4.3 Do not touch the positive terminal with any tool when removing the negative battery cable.

4.4 Use a fender cover (blanket) when connecting or disconnecting battery negative terminal and/or when replacing or removing fuses. Ensure battery negative terminal is fully seated when reconnecting.

4.5 Power tools that can exceed 60 pound force-inch of torque should not be used to tighten battery cable. The torque value for battery cable tightening is given in the Installation Instruction Sheet.

Connectors
4.4. When disconnecting connectors, do not pull on the wires; pull on the connectors.

4.5. DO NOT pull on vehicle wires and/or wire harnesses. To uncouple electrical connectors, pull only on the connector itself and release the connector securing tab (identified in the Installation Instruction Sheet).

4.6. Disconnected wires must not have any strain on connectors or wires (i.e., do not allow components hanging from a wire harness).

4.7. When reconnecting connectors, ensure connectors are securely snapped together and wires are not twisted or kinked.

Wire Harnesses
4.8. When installing the accessories that use wire harnesses (e.g. audio, alarm, trailer wire harness…), make sure the harness is not cut or perforated by any sharp metal objects/edges.

Wire Ties
4.9. When using wire ties to secure harness, clip the wire ties after securing them.

4.10. Ensure that wire routing does not interfere with movement of mechanical components before tightening the wire tie.

Functional Checks
4.11. Functional checks (from the Checklist Section of the Installation Instruction Sheet) must be performed on all disconnected electrical components.

Use of Special Chemicals

Cleaners
5.1 All cloths used for preparatory installations must be cleaned and periodically changed. Any cloth that is dropped on the floor should not be used until cleaned.

5.2. Cleaning solutions/solvents are identified in the Installation Instruction Sheet and are not to be sprayed directly onto vehicle surfaces (interior/exterior).

5.3. Cleaning solutions/solvents are not to be sprayed onto cloth/rag inside of vehicle (this is to prevent over spray on interior).

5.4. When using cleaners such as Prep-Solvent-70, or Household Windex follow manufacturer's recommendations:-

5.4.1 Always use a clean (lint free scratch resistant) soft cloth (or wipe), and clean a small area at a time (~ 3 ft. x 3 ft. max.).

5.4.2 Shake well.

5.4.3 Apply cleaner to cloth or wipe. Do not spray cleaning solution directly on any vehicle surfaces.

5.4.4 Clean surface thoroughly and wipe dry immediately with a new clean cloth. Do not allow cleaner to air dry.

Sealers

5.5 Follow Installation Instruction Sheet recommendations.

5.6 For any cleanup follow sealer manufacturer recommendations.

Temperature

6.1. Some accessories require installation in a controlled temperature environment. The installation instructions will provide the temperature range of this temperature and will differentiate between vehicle and accessory temperature (should it not be the same for both.)

6.2. The installation location will be responsible for determining whether the temperature range has been met.

6.3. The method of temperature measurement will NOT be called out in the instructions.

6.4. Recommended tools for measuring vehicle and accessory temperature are:-
Non-Intrusive IR Temperature Probe/Gun

6.5. Recommended heating/cooling methods are:-
Heat box (for small components), Car HVAC, Heat Gun….

Torque Recheck

7.1. When rechecking of a fastener torque is called out in the Installation Instruction Sheet it is sufficient to ensure that the fastener does not rotate when the installation torque is reapplied. If the fastener rotates then continue tightening until the specified torque is reached. Do not loosen fastener.

Accessory Installation Practices

This document is written and maintained by Toyota Motor Sales, U.S.A., Inc. as an aid to defining accessory installation best practices.

Safety

1.1 Eye protection should be worn during any drilling and cutting, and when power tools are used to remove or attach fasteners.

Eye protection should also be used when using any special chemicals (as listed on the first page of the Installation Instruction Sheet) to reduce the risk of these chemicals entering the eye.

1.2 Rechecking of fastener tightness.
For some accessories it is necessary to recheck the tightness of the fasteners securing the accessory, for example – wheel lug nuts, running board bolts, tow hitch bolts etc. Where a recheck is required it will be noted in the Installation Instruction Sheet (either in the Procedure Section and/or the Checklist Section)

1.3 Supplemental Restraint System SRS
Any vehicle equipped with a supplemental restraint system (SRS). Failure to carry out the following procedures listed below could result in possible deployment of airbag, personal injury, or unnecessary repairs to SRS.

1.3.1 Turn the key switch to the LOCK position.
1.3.2 Remove key from ignition switch.
1.3.3 Disconnect the negative battery cable.
1.3.4 Never use a voltmeter to troubleshoot any of the harnesses or connectors to the SRS. Accidentally probing the connectors to the SRS can lead to deployment of the airbag.
1.3.5 SRS wire harness loom/cover is bright yellow in color.
1.3.6 SRS contains a battery backup system; therefore ALWAYS wait for a minimum of 90 seconds after disconnecting the battery negative cable before removal/disassembly of electrical components. (Reference TSB: EL93-001).

Vehicle Protection

2.1 Vehicle should be clean before performing any accessory installation.

2.2 Prepare grille cover, fender cover, seat cover, and floor mat cover as appropriate to the installation area on the vehicle of the accessory before starting installation. Blankets, seat covers, paper floor coverings are suitable for this purpose.

2.3 Do not place any tools on unprotected vehicle surfaces, or leave inside vehicle. Use a tool tray to keep tools separate from the vehicle surface.

2.4 It is recommended that no exposed jewelry (rings, watches etc.), zippers, buttons, rivets, belt buckles or other scratch potential objects be worn. Articles of clothing or jewelry that have the potential to come into contact with the vehicle surface (i.e., generally below the chest) and contain any of the above items should be covered with tape and/or other protective material to prevent scratching of the vehicle.

2.5. Clothing and shoes must be free of grease and dirt to maximize vehicle cleanliness.

2.6 Parts and tool trays should be used for interior installations whenever possible. Parts, tools or trays must not be placed onto unprotected, seats, carpets or trim panels.

2.7 Tools, air hoses and power cords should be free of grease and dirt.

2.8 Blanket should be used to cover engine bay while working on accessory that requires hood to be open (e.g. Hood Protector) to prevent fasteners from being dropped into engine bay.

Vehicle Disassembly/Re-assembly

Panel Removal

3.1 Many panels on the vehicle are held in place with clips. Where the location of this clip is critical it is shown on the figure(s) in the Installation Instruction Sheet. Care must be taken to remove the panel and its clip(s) without damage. Toyota recommends use of plastic (nylon) removal tools, rather than metal and two Toyota Special Service Tools are available:-

Panel Pry Tool #1 Toyota SST # 00002-06001-01
Panel Pry Tool #2 Toyota SST # 00002-06002-01

Panel Protection

3.2. Place all removed parts on a protected surface.

3.3. All work benches, tables, or platforms used for assembly or temporary storage of parts should be carpeted or suitably covered to provide a soft, non-abrasive surface.

Parts Container

3.4 Use a small parts container to keep removed bolts and tapping screws so that they can be reassembled correctly.

Electrical Component Disassembly/Reassembly

Battery Cable

4.1 Unless otherwise stated battery negative terminal must be disconnected and isolated before performing work on any electrical components (i.e. connecting or disconnecting any

electrical connectors, etc.). In some installations fuse removal is used instead of battery terminal disconnection, and will be referred to in the Installation Instruction Sheet.
4.2 Ignition key must be removed from the ignition switch when the negative battery terminal or appropriate fuse is disconnected/removed and reconnected/reinstalled.

4.3 Do not touch the positive terminal with any tool when removing the negative battery cable.

4.4 Use a fender cover (blanket) when connecting or disconnecting battery negative terminal and/or when replacing or removing fuses. Ensure battery negative terminal is fully seated when reconnecting.

4.5 Power tools that can exceed 60 pound force-inch of torque should not be used to tighten battery cable. The torque value for battery cable tightening is given in the Installation Instruction Sheet.

Connectors
4.4. When disconnecting connectors, do not pull on the wires; pull on the connectors.

4.5. DO NOT pull on vehicle wires and/or wire harnesses. To uncouple electrical connectors, pull only on the connector itself and release the connector securing tab (identified in the Installation Instruction Sheet).

4.6. Disconnected wires must not have any strain on connectors or wires (i.e., do not allow components hanging from a wire harness).

4.7. When reconnecting connectors, ensure connectors are securely snapped together and wires are not twisted or kinked.

Wire Harnesses
4.8. When installing the accessories that use wire harnesses (e.g. audio, alarm, trailer wire harness…), make sure the harness is not cut or perforated by any sharp metal objects/edges.

Wire Ties
4.9. When using wire ties to secure harness, clip the wire ties after securing them.

4.10. Ensure that wire routing does not interfere with movement of mechanical components before tightening the wire tie.

Functional Checks
4.11. Functional checks (from the Checklist Section of the Installation Instruction Sheet) must be performed on all disconnected electrical components.

Use of Special Chemicals

Cleaners
5.1 All cloths used for preparatory installations must be cleaned and periodically changed. Any cloth that is dropped on the floor should not be used until cleaned.

5.2. Cleaning solutions/solvents are identified in the Installation Instruction Sheet and are not to be sprayed directly onto vehicle surfaces (interior/exterior).

5.3. Cleaning solutions/solvents are not to be sprayed onto cloth/rag inside of vehicle (this is to prevent over spray on interior).

5.4. When using cleaners such as Prep-Solvent-70, or Household Windex follow manufacturer's recommendations:-

5.4.1 Always use a clean (lint free scratch resistant) soft cloth (or wipe), and clean a small area at a time (~ 3 ft. x 3 ft. max.).

5.4.2 Shake well.

5.4.3 Apply cleaner to cloth or wipe. Do not spray cleaning solution directly on any vehicle surfaces.

5.4.4 Clean surface thoroughly and wipe dry immediately with a new clean cloth. Do not allow cleaner to air dry.

Sealers

5.5 Follow Installation Instruction Sheet recommendations.

5.6 For any cleanup follow sealer manufacturer recommendations.

Temperature

6.1. Some accessories require installation in a controlled temperature environment. The installation instructions will provide the temperature range of this temperature and will differentiate between vehicle and accessory temperature (should it not be the same for both.)

6.2. The installation location will be responsible for determining whether the temperature range has been met.

6.3. The method of temperature measurement will NOT be called out in the instructions.

6.4. Recommended tools for measuring vehicle and accessory temperature are:-
Non-Intrusive IR Temperature Probe/Gun

6.5. Recommended heating/cooling methods are:-
Heat box (for small components), Car HVAC, Heat Gun….

Torque Recheck

7.1. When rechecking of a fastener torque is called out in the Installation Instruction Sheet it is sufficient to ensure that the fastener does not rotate when the installation torque is reapplied. If the fastener rotates then continue tightening until the specified torque is reached. Do not loosen fastener.

Accessory Installation Practices

This document is written and maintained by Toyota Motor Sales, U.S.A., Inc. as an aid to defining accessory installation best practices.

Safety

1.1 Eye protection should be worn during any drilling and cutting, and when power tools are used to remove or attach fasteners.

Eye protection should also be used when using any special chemicals (as listed on the first page of the Installation Instruction Sheet) to reduce the risk of these chemicals entering the eye.

1.2 Rechecking of fastener tightness.
For some accessories it is necessary to recheck the tightness of the fasteners securing the accessory, for example – wheel lug nuts, running board bolts, tow hitch bolts etc. Where a recheck is required it will be noted in the Installation Instruction Sheet (either in the Procedure Section and/or the Checklist Section)

1.3 Supplemental Restraint System SRS
Any vehicle equipped with a supplemental restraint system (SRS). Failure to carry out the following procedures listed below could result in possible deployment of airbag, personal injury, or unnecessary repairs to SRS.

1.3.1 Turn the key switch to the LOCK position.
1.3.2 Remove key from ignition switch.
1.3.3 Disconnect the negative battery cable.
1.3.4 Never use a voltmeter to troubleshoot any of the harnesses or connectors to the SRS. Accidentally probing the connectors to the SRS can lead to deployment of the airbag.
1.3.5 SRS wire harness loom/cover is bright yellow in color.
1.3.6 SRS contains a battery backup system; therefore ALWAYS wait for a minimum of 90 seconds after disconnecting the battery negative cable before removal/disassembly of electrical components. (Reference TSB: EL93-001).

Vehicle Protection

2.1 Vehicle should be clean before performing any accessory installation.

2.2 Prepare grille cover, fender cover, seat cover, and floor mat cover as appropriate to the installation area on the vehicle of the accessory before starting installation. Blankets, seat covers, paper floor coverings are suitable for this purpose.

2.3 Do not place any tools on unprotected vehicle surfaces, or leave inside vehicle. Use a tool tray to keep tools separate from the vehicle surface.

2.4 It is recommended that no exposed jewelry (rings, watches etc.), zippers, buttons, rivets, belt buckles or other scratch potential objects be worn. Articles of clothing or jewelry that have the potential to come into contact with the vehicle surface (i.e., generally below the chest) and contain any of the above items should be covered with tape and/or other protective material to prevent scratching of the vehicle.

2.5. Clothing and shoes must be free of grease and dirt to maximize vehicle cleanliness.

2.6 Parts and tool trays should be used for interior installations whenever possible. Parts, tools or trays must not be placed onto unprotected, seats, carpets or trim panels.

2.7 Tools, air hoses and power cords should be free of grease and dirt.

2.8 Blanket should be used to cover engine bay while working on accessory that requires hood to be open (e.g. Hood Protector) to prevent fasteners from being dropped into engine bay.

Vehicle Disassembly/Re-assembly

Panel Removal

3.1 Many panels on the vehicle are held in place with clips. Where the location of this clip is critical it is shown on the figure(s) in the Installation Instruction Sheet. Care must be taken to remove the panel and its clip(s) without damage. Toyota recommends use of plastic (nylon) removal tools, rather than metal and two Toyota Special Service Tools are available:-

Panel Pry Tool #1 Toyota SST # 00002-06001-01
Panel Pry Tool #2 Toyota SST # 00002-06002-01

Panel Protection

3.2. Place all removed parts on a protected surface.

3.3. All work benches, tables, or platforms used for assembly or temporary storage of parts should be carpeted or suitably covered to provide a soft, non-abrasive surface.

Parts Container

3.4 Use a small parts container to keep removed bolts and tapping screws so that they can be reassembled correctly.

Electrical Component Disassembly/Reassembly

Battery Cable

4.1 Unless otherwise stated battery negative terminal must be disconnected and isolated before performing work on any electrical components (i.e. connecting or disconnecting any

electrical connectors, etc.). In some installations fuse removal is used instead of battery terminal disconnection, and will be referred to in the Installation Instruction Sheet.
4.2 Ignition key must be removed from the ignition switch when the negative battery terminal or appropriate fuse is disconnected/removed and reconnected/reinstalled.

4.3 Do not touch the positive terminal with any tool when removing the negative battery cable.

4.4 Use a fender cover (blanket) when connecting or disconnecting battery negative terminal and/or when replacing or removing fuses. Ensure battery negative terminal is fully seated when reconnecting.

4.5 Power tools that can exceed 60 pound force-inch of torque should not be used to tighten battery cable. The torque value for battery cable tightening is given in the Installation Instruction Sheet.

Connectors
4.4. When disconnecting connectors, do not pull on the wires; pull on the connectors.

4.5. DO NOT pull on vehicle wires and/or wire harnesses. To uncouple electrical connectors, pull only on the connector itself and release the connector securing tab (identified in the Installation Instruction Sheet).

4.6. Disconnected wires must not have any strain on connectors or wires (i.e., do not allow components hanging from a wire harness).

4.7. When reconnecting connectors, ensure connectors are securely snapped together and wires are not twisted or kinked.

Wire Harnesses
4.8. When installing the accessories that use wire harnesses (e.g. audio, alarm, trailer wire harness…), make sure the harness is not cut or perforated by any sharp metal objects/edges.

Wire Ties
4.9. When using wire ties to secure harness, clip the wire ties after securing them.

4.10. Ensure that wire routing does not interfere with movement of mechanical components before tightening the wire tie.

Functional Checks
4.11. Functional checks (from the Checklist Section of the Installation Instruction Sheet) must be performed on all disconnected electrical components.

Use of Special Chemicals

Cleaners
5.1 All cloths used for preparatory installations must be cleaned and periodically changed. Any cloth that is dropped on the floor should not be used until cleaned.

5.2. Cleaning solutions/solvents are identified in the Installation Instruction Sheet and are not to be sprayed directly onto vehicle surfaces (interior/exterior).

5.3. Cleaning solutions/solvents are not to be sprayed onto cloth/rag inside of vehicle (this is to prevent over spray on interior).

5.4. When using cleaners such as Prep-Solvent-70, or Household Windex follow manufacturer's recommendations:-

5.4.1 Always use a clean (lint free scratch resistant) soft cloth (or wipe), and clean a small area at a time (~ 3 ft. x 3 ft. max.).

5.4.2 Shake well.

5.4.3 Apply cleaner to cloth or wipe. Do not spray cleaning solution directly on any vehicle surfaces.

5.4.4 Clean surface thoroughly and wipe dry immediately with a new clean cloth. Do not allow cleaner to air dry.

Sealers

5.5 Follow Installation Instruction Sheet recommendations.

5.6 For any cleanup follow sealer manufacturer recommendations.

Temperature

6.1. Some accessories require installation in a controlled temperature environment. The installation instructions will provide the temperature range of this temperature and will differentiate between vehicle and accessory temperature (should it not be the same for both.)

6.2. The installation location will be responsible for determining whether the temperature range has been met.

6.3. The method of temperature measurement will NOT be called out in the instructions.

6.4. Recommended tools for measuring vehicle and accessory temperature are:-
Non-Intrusive IR Temperature Probe/Gun

6.5. Recommended heating/cooling methods are:-
Heat box (for small components), Car HVAC, Heat Gun….

Torque Recheck

7.1. When rechecking of a fastener torque is called out in the Installation Instruction Sheet it is sufficient to ensure that the fastener does not rotate when the installation torque is reapplied. If the fastener rotates then continue tightening until the specified torque is reached. Do not loosen fastener.

Accessory Installation Practices

This document is written and maintained by Toyota Motor Sales, U.S.A., Inc. as an aid to defining accessory installation best practices.

Safety

1.1 Eye protection should be worn during any drilling and cutting, and when power tools are used to remove or attach fasteners.

Eye protection should also be used when using any special chemicals (as listed on the first page of the Installation Instruction Sheet) to reduce the risk of these chemicals entering the eye.

1.2 Rechecking of fastener tightness.
For some accessories it is necessary to recheck the tightness of the fasteners securing the accessory, for example – wheel lug nuts, running board bolts, tow hitch bolts etc. Where a recheck is required it will be noted in the Installation Instruction Sheet (either in the Procedure Section and/or the Checklist Section)

1.3 Supplemental Restraint System SRS
Any vehicle equipped with a supplemental restraint system (SRS). Failure to carry out the following procedures listed below could result in possible deployment of airbag, personal injury, or unnecessary repairs to SRS.

1.3.1 Turn the key switch to the LOCK position.
1.3.2 Remove key from ignition switch.
1.3.3 Disconnect the negative battery cable.
1.3.4 Never use a voltmeter to troubleshoot any of the harnesses or connectors to the SRS. Accidentally probing the connectors to the SRS can lead to deployment of the airbag.
1.3.5 SRS wire harness loom/cover is bright yellow in color.
1.3.6 SRS contains a battery backup system; therefore ALWAYS wait for a minimum of 90 seconds after disconnecting the battery negative cable before removal/disassembly of electrical components. (Reference TSB: EL93-001).

Vehicle Protection

2.1 Vehicle should be clean before performing any accessory installation.

2.2 Prepare grille cover, fender cover, seat cover, and floor mat cover as appropriate to the installation area on the vehicle of the accessory before starting installation. Blankets, seat covers, paper floor coverings are suitable for this purpose.

2.3 Do not place any tools on unprotected vehicle surfaces, or leave inside vehicle. Use a tool tray to keep tools separate from the vehicle surface.

2.4 It is recommended that no exposed jewelry (rings, watches etc.), zippers, buttons, rivets, belt buckles or other scratch potential objects be worn. Articles of clothing or jewelry that have the potential to come into contact with the vehicle surface (i.e., generally below the chest) and contain any of the above items should be covered with tape and/or other protective material to prevent scratching of the vehicle.

2.5. Clothing and shoes must be free of grease and dirt to maximize vehicle cleanliness.

2.6 Parts and tool trays should be used for interior installations whenever possible. Parts, tools or trays must not be placed onto unprotected, seats, carpets or trim panels.

2.7 Tools, air hoses and power cords should be free of grease and dirt.

2.8 Blanket should be used to cover engine bay while working on accessory that requires hood to be open (e.g. Hood Protector) to prevent fasteners from being dropped into engine bay.

Vehicle Disassembly/Re-assembly

Panel Removal

3.1 Many panels on the vehicle are held in place with clips. Where the location of this clip is critical it is shown on the figure(s) in the Installation Instruction Sheet. Care must be taken to remove the panel and its clip(s) without damage. Toyota recommends use of plastic (nylon) removal tools, rather than metal and two Toyota Special Service Tools are available:-

Panel Pry Tool #1 Toyota SST # 00002-06001-01
Panel Pry Tool #2 Toyota SST # 00002-06002-01

Panel Protection

3.2. Place all removed parts on a protected surface.

3.3. All work benches, tables, or platforms used for assembly or temporary storage of parts should be carpeted or suitably covered to provide a soft, non-abrasive surface.

Parts Container

3.4 Use a small parts container to keep removed bolts and tapping screws so that they can be reassembled correctly.

Electrical Component Disassembly/Reassembly

Battery Cable

4.1 Unless otherwise stated battery negative terminal must be disconnected and isolated before performing work on any electrical components (i.e. connecting or disconnecting any

electrical connectors, etc.). In some installations fuse removal is used instead of battery terminal disconnection, and will be referred to in the Installation Instruction Sheet.
4.2 Ignition key must be removed from the ignition switch when the negative battery terminal or appropriate fuse is disconnected/removed and reconnected/reinstalled.

4.3 Do not touch the positive terminal with any tool when removing the negative battery cable.

4.4 Use a fender cover (blanket) when connecting or disconnecting battery negative terminal and/or when replacing or removing fuses. Ensure battery negative terminal is fully seated when reconnecting.

4.5 Power tools that can exceed 60 pound force-inch of torque should not be used to tighten battery cable. The torque value for battery cable tightening is given in the Installation Instruction Sheet.

Connectors
4.4. When disconnecting connectors, do not pull on the wires; pull on the connectors.

4.5. DO NOT pull on vehicle wires and/or wire harnesses. To uncouple electrical connectors, pull only on the connector itself and release the connector securing tab (identified in the Installation Instruction Sheet).

4.6. Disconnected wires must not have any strain on connectors or wires (i.e., do not allow components hanging from a wire harness).

4.7. When reconnecting connectors, ensure connectors are securely snapped together and wires are not twisted or kinked.

Wire Harnesses
4.8. When installing the accessories that use wire harnesses (e.g. audio, alarm, trailer wire harness…), make sure the harness is not cut or perforated by any sharp metal objects/edges.

Wire Ties
4.9. When using wire ties to secure harness, clip the wire ties after securing them.

4.10. Ensure that wire routing does not interfere with movement of mechanical components before tightening the wire tie.

Functional Checks
4.11. Functional checks (from the Checklist Section of the Installation Instruction Sheet) must be performed on all disconnected electrical components.

Use of Special Chemicals

Cleaners
5.1 All cloths used for preparatory installations must be cleaned and periodically changed. Any cloth that is dropped on the floor should not be used until cleaned.

5.2. Cleaning solutions/solvents are identified in the Installation Instruction Sheet and are not to be sprayed directly onto vehicle surfaces (interior/exterior).

5.3. Cleaning solutions/solvents are not to be sprayed onto cloth/rag inside of vehicle (this is to prevent over spray on interior).

5.4. When using cleaners such as Prep-Solvent-70, or Household Windex follow manufacturer's recommendations:-

5.4.1 Always use a clean (lint free scratch resistant) soft cloth (or wipe), and clean a small area at a time (~ 3 ft. x 3 ft. max.).

5.4.2 Shake well.

5.4.3 Apply cleaner to cloth or wipe. Do not spray cleaning solution directly on any vehicle surfaces.

5.4.4 Clean surface thoroughly and wipe dry immediately with a new clean cloth. Do not allow cleaner to air dry.

Sealers

5.5 Follow Installation Instruction Sheet recommendations.

5.6 For any cleanup follow sealer manufacturer recommendations.

Temperature

6.1. Some accessories require installation in a controlled temperature environment. The installation instructions will provide the temperature range of this temperature and will differentiate between vehicle and accessory temperature (should it not be the same for both.)

6.2. The installation location will be responsible for determining whether the temperature range has been met.

6.3. The method of temperature measurement will NOT be called out in the instructions.

6.4. Recommended tools for measuring vehicle and accessory temperature are:-
Non-Intrusive IR Temperature Probe/Gun

6.5. Recommended heating/cooling methods are:-
Heat box (for small components), Car HVAC, Heat Gun….

Torque Recheck

7.1. When rechecking of a fastener torque is called out in the Installation Instruction Sheet it is sufficient to ensure that the fastener does not rotate when the installation torque is reapplied. If the fastener rotates then continue tightening until the specified torque is reached. Do not loosen fastener.

Accessory Installation Practices

This document is written and maintained by Toyota Motor Sales, U.S.A., Inc. as an aid to defining accessory installation best practices.

Safety

1.1 Eye protection should be worn during any drilling and cutting, and when power tools are used to remove or attach fasteners.

Eye protection should also be used when using any special chemicals (as listed on the first page of the Installation Instruction Sheet) to reduce the risk of these chemicals entering the eye.

1.2 Rechecking of fastener tightness.
For some accessories it is necessary to recheck the tightness of the fasteners securing the accessory, for example – wheel lug nuts, running board bolts, tow hitch bolts etc. Where a recheck is required it will be noted in the Installation Instruction Sheet (either in the Procedure Section and/or the Checklist Section)

1.3 Supplemental Restraint System SRS
Any vehicle equipped with a supplemental restraint system (SRS). Failure to carry out the following procedures listed below could result in possible deployment of airbag, personal injury, or unnecessary repairs to SRS.

1.3.1 Turn the key switch to the LOCK position.
1.3.2 Remove key from ignition switch.
1.3.3 Disconnect the negative battery cable.
1.3.4 Never use a voltmeter to troubleshoot any of the harnesses or connectors to the SRS. Accidentally probing the connectors to the SRS can lead to deployment of the airbag.
1.3.5 SRS wire harness loom/cover is bright yellow in color.
1.3.6 SRS contains a battery backup system; therefore ALWAYS wait for a minimum of 90 seconds after disconnecting the battery negative cable before removal/disassembly of electrical components. (Reference TSB: EL93-001).

Vehicle Protection

2.1 Vehicle should be clean before performing any accessory installation.

2.2 Prepare grille cover, fender cover, seat cover, and floor mat cover as appropriate to the installation area on the vehicle of the accessory before starting installation. Blankets, seat covers, paper floor coverings are suitable for this purpose.

2.3 Do not place any tools on unprotected vehicle surfaces, or leave inside vehicle. Use a tool tray to keep tools separate from the vehicle surface.

2.4 It is recommended that no exposed jewelry (rings, watches etc.), zippers, buttons, rivets, belt buckles or other scratch potential objects be worn. Articles of clothing or jewelry that have the potential to come into contact with the vehicle surface (i.e., generally below the chest) and contain any of the above items should be covered with tape and/or other protective material to prevent scratching of the vehicle.

2.5. Clothing and shoes must be free of grease and dirt to maximize vehicle cleanliness.

2.6 Parts and tool trays should be used for interior installations whenever possible. Parts, tools or trays must not be placed onto unprotected, seats, carpets or trim panels.

2.7 Tools, air hoses and power cords should be free of grease and dirt.

2.8 Blanket should be used to cover engine bay while working on accessory that requires hood to be open (e.g. Hood Protector) to prevent fasteners from being dropped into engine bay.

Vehicle Disassembly/Re-assembly

Panel Removal

3.1 Many panels on the vehicle are held in place with clips. Where the location of this clip is critical it is shown on the figure(s) in the Installation Instruction Sheet. Care must be taken to remove the panel and its clip(s) without damage. Toyota recommends use of plastic (nylon) removal tools, rather than metal and two Toyota Special Service Tools are available:-

Panel Pry Tool #1 Toyota SST # 00002-06001-01
Panel Pry Tool #2 Toyota SST # 00002-06002-01

Panel Protection

3.2. Place all removed parts on a protected surface.

3.3. All work benches, tables, or platforms used for assembly or temporary storage of parts should be carpeted or suitably covered to provide a soft, non-abrasive surface.

Parts Container

3.4 Use a small parts container to keep removed bolts and tapping screws so that they can be reassembled correctly.

Electrical Component Disassembly/Reassembly

Battery Cable

4.1 Unless otherwise stated battery negative terminal must be disconnected and isolated before performing work on any electrical components (i.e. connecting or disconnecting any

electrical connectors, etc.). In some installations fuse removal is used instead of battery terminal disconnection, and will be referred to in the Installation Instruction Sheet.
4.2 Ignition key must be removed from the ignition switch when the negative battery terminal or appropriate fuse is disconnected/removed and reconnected/reinstalled.

4.3 Do not touch the positive terminal with any tool when removing the negative battery cable.

4.4 Use a fender cover (blanket) when connecting or disconnecting battery negative terminal and/or when replacing or removing fuses. Ensure battery negative terminal is fully seated when reconnecting.

4.5 Power tools that can exceed 60 pound force-inch of torque should not be used to tighten battery cable. The torque value for battery cable tightening is given in the Installation Instruction Sheet.

Connectors
4.4. When disconnecting connectors, do not pull on the wires; pull on the connectors.

4.5. DO NOT pull on vehicle wires and/or wire harnesses. To uncouple electrical connectors, pull only on the connector itself and release the connector securing tab (identified in the Installation Instruction Sheet).

4.6. Disconnected wires must not have any strain on connectors or wires (i.e., do not allow components hanging from a wire harness).

4.7. When reconnecting connectors, ensure connectors are securely snapped together and wires are not twisted or kinked.

Wire Harnesses
4.8. When installing the accessories that use wire harnesses (e.g. audio, alarm, trailer wire harness…), make sure the harness is not cut or perforated by any sharp metal objects/edges.

Wire Ties
4.9. When using wire ties to secure harness, clip the wire ties after securing them.

4.10. Ensure that wire routing does not interfere with movement of mechanical components before tightening the wire tie.

Functional Checks
4.11. Functional checks (from the Checklist Section of the Installation Instruction Sheet) must be performed on all disconnected electrical components.

Use of Special Chemicals

Cleaners
5.1 All cloths used for preparatory installations must be cleaned and periodically changed. Any cloth that is dropped on the floor should not be used until cleaned.

5.2. Cleaning solutions/solvents are identified in the Installation Instruction Sheet and are not to be sprayed directly onto vehicle surfaces (interior/exterior).

5.3. Cleaning solutions/solvents are not to be sprayed onto cloth/rag inside of vehicle (this is to prevent over spray on interior).

5.4. When using cleaners such as Prep-Solvent-70, or Household Windex follow manufacturer's recommendations:-

5.4.1 Always use a clean (lint free scratch resistant) soft cloth (or wipe), and clean a small area at a time (~ 3 ft. x 3 ft. max.).

5.4.2 Shake well.

5.4.3 Apply cleaner to cloth or wipe. Do not spray cleaning solution directly on any vehicle surfaces.

5.4.4 Clean surface thoroughly and wipe dry immediately with a new clean cloth. Do not allow cleaner to air dry.

Sealers

5.5 Follow Installation Instruction Sheet recommendations.

5.6 For any cleanup follow sealer manufacturer recommendations.

Temperature

6.1. Some accessories require installation in a controlled temperature environment. The installation instructions will provide the temperature range of this temperature and will differentiate between vehicle and accessory temperature (should it not be the same for both.)

6.2. The installation location will be responsible for determining whether the temperature range has been met.

6.3. The method of temperature measurement will NOT be called out in the instructions.

6.4. Recommended tools for measuring vehicle and accessory temperature are:-
Non-Intrusive IR Temperature Probe/Gun

6.5. Recommended heating/cooling methods are:-
Heat box (for small components), Car HVAC, Heat Gun….

Torque Recheck

7.1. When rechecking of a fastener torque is called out in the Installation Instruction Sheet it is sufficient to ensure that the fastener does not rotate when the installation torque is reapplied. If the fastener rotates then continue tightening until the specified torque is reached. Do not loosen fastener.

FOREWORD

This manual has been prepared for use when performing terminal repairs, wire repairs, or connector repairs on vehicles.

A step–by–step section on connector repair and terminal repair is included.

There is a section of charts with terminal and connector illustrations, part numbers, and notes on terminal removal.

By using this guide, a satisfactory repair of the wiring harness and connectors in Toyota vehicles will be easy to achieve.

All information in this manual is based on the latest product information at the time of publication. However, specifications and procedures are subject to change without notice.

TOYOTA MOTOR CORPORATION

©2002 TOYOTA MOTOR CORPORATION
All rights reserved. This book may not be reproduced or copied, in whole or in part, without the written permission of Toyota Motor Corporation.

GENERAL INFORMATION

This manual provides instruction in the following repairs:

- How to Inspect for System Inspection
- Circuit Protection
- Terminal and Connector Repair Procedure

NOTICE:
When inspecting or repairing the SRS AIRBAG, be sure to carefully read the precautionary instructions and procedure in the Repair Manual for the applicable model.

A

After any electrical repair is made, always test the circuit by operating the devices in the circuit. This confirms not only that the repair is correct, but also that the cause of the complaint was correctly identified.

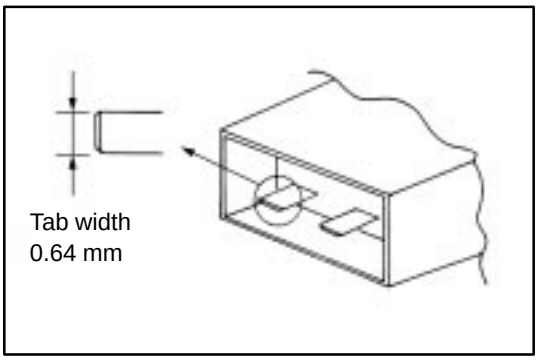

Terminal type number name

The terminal type number naming system has changed: the metric system will be used in place of the inch system. To be more specific, male tab width ”in millimeters” will be used as terminal type number from now on — in place of male tab width in inches which has been in use so far.

Below is a table of comparison:

Old terminal type No. (inch)		New terminal type No. (mm)
025	→	0.64
040 (II, III, IV)	→	1.0 (II, III, IV)
050	→	1.3
070 (II)	→	1.8 (II)
090 (II)	→	2.3 (II)
187	→	4.8
250 (II)	→	6.3 (II)
305	→	7.7
312	→	8.0
375	→	9.5

For those connectors which are not shown above, the terminal type numbers remain unchanged.

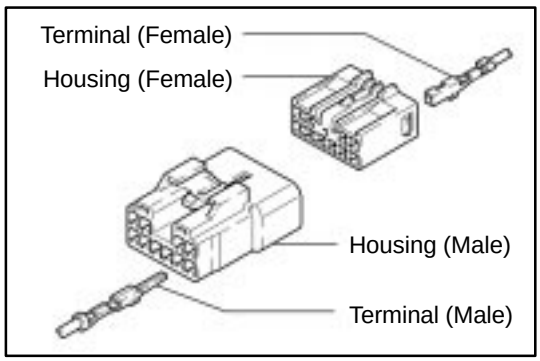

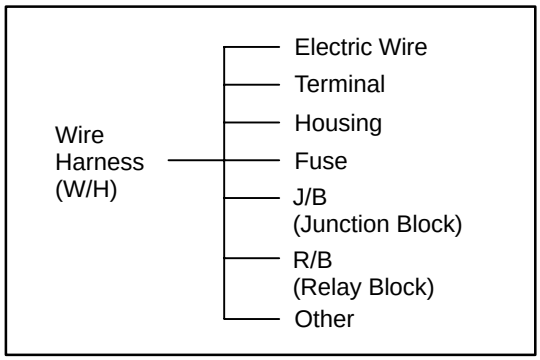

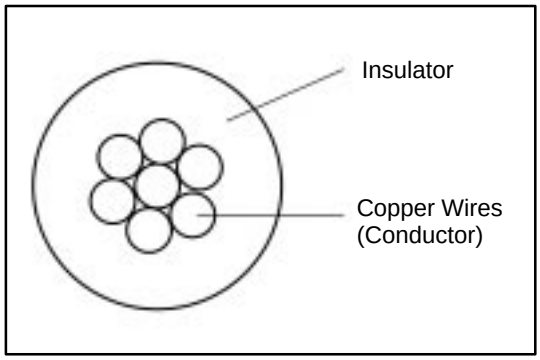

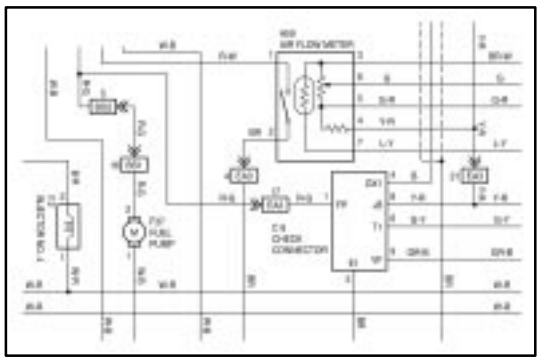

B	=	Black	W	=	White
L	=	Blue	BR	=	Brown
V	=	Violet	SB	=	Sky Blue
R	=	Red	G	=	Green
P	=	Pink	LG	=	Light Green
Y	=	Yellow	GR	=	Gray
O	=	Orange			

What is Wire Harness?

The wire harness (W/H) is systems of electric wires for automobiles to connect all the electronics parts in automobile electrically and work them. As more electronics parts are introduced in automobiles recently, the electric wires used for the wire harness are increasing in number and the structure is becoming more complicated. As a result of that, there are hundreds of connectors, which is the parts which connects wires mechanically and electrically, in one vehicle. Therefore, numbers of the connector terminal (Terminal) or the connector housing (Housing) are designed to meet many kinds of uses of circuits. Various components have been improved to ensure the product reliability or realize a wider space in the vehicles.

Wire Harness Components

Wire harness mainly consists of wires, terminals, or housings.
There are various components are designed for many parts of vehicles, such as one with high heat–resistance, water–resistance, or bending ability, ones have different current capacities, or ones are hardly influenced by electromagnetic noise.

Electric Wire

The electric wires used for the wire harness consists of the conductor made from numbers of twisted mild copper wire with a diameter of less than 0.5 mm and the insulator surrounding the conductor.
The insulator is generally made from vinyl chloride and covers the conductor with even thickness. The insulators are color–coded in order to distinguish each wire. The base colors or the stripe patterns is used to make difference between insulators. Each color of wires is indicated by the abbreviation in the repair manual and the electrical wiring diagram.

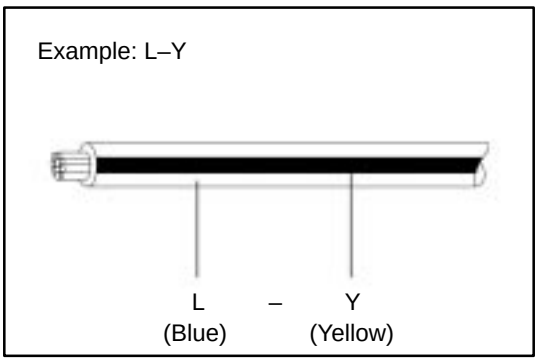

The first letter indicates the basic wire color and the second letter indicates the color of the stripe.

A

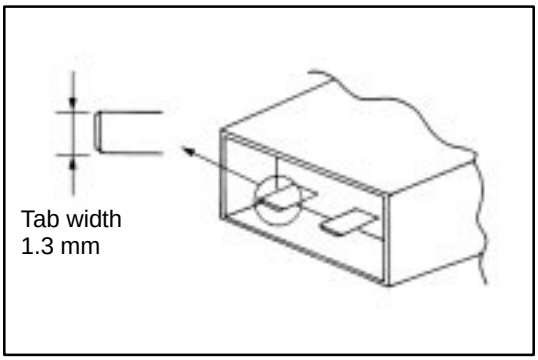

Terminal and housing

Terminal connects wires and housing insulates connecting parts.
There are the male terminal and the female terminal. The types of terminals are decided by tab width of male terminal. And the terminal with the rubber plug or the rubber ring is used in the part, such as the engine compartment, which become wet. For the circuit with slight current at EFI system or ABS system, the gold–plated terminal is introduced for ensuring reliabilities.
As the number of the circuit is increasing recently, there are new types of parts introduced. For example, there is the hybrid type housing, which is a combination of terminals with different tab width, such as the power source terminal or the signal terminal. Also, new type of connector such as the double lock housing, which is designed with the retainer in addition to the lance to prevent terminal from slipping off, is available. The new type of connectors are produced to realize higher product reliabilities and utilized widely recently. The major characteristics of these new connectors are shown in the table 1.
There are two types of lances: housing lance, which is inside the housing and terminal lance, which is inside the terminal.

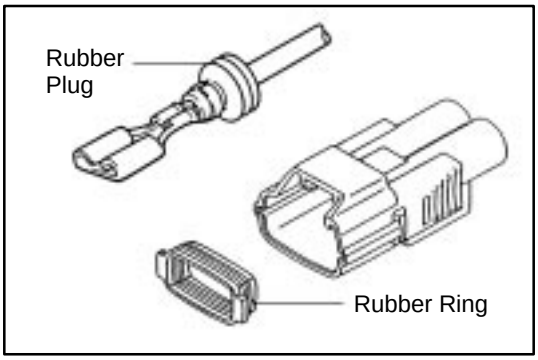

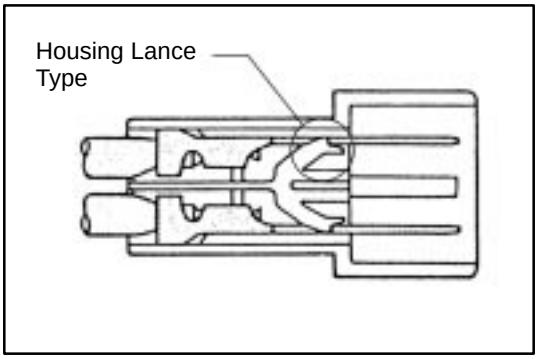

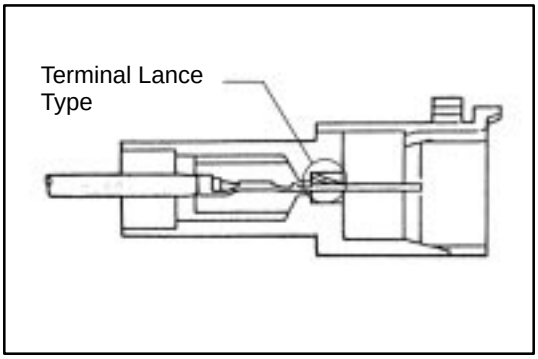

Table 1 : Characteristics of the new types of connector (Improvement)

Characteristics (Improvement)	Note
1. Double Lock 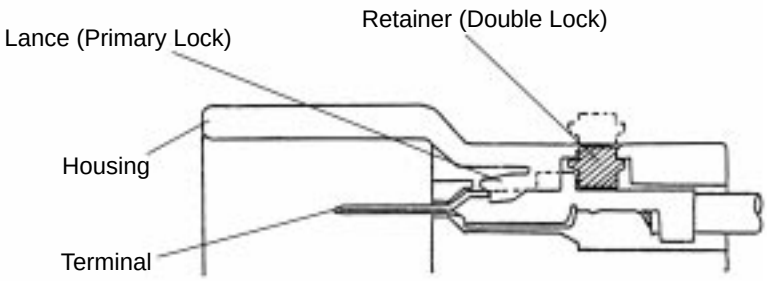	If terminal is not inserted to housing correctly, the retailer does not fit.
2. Extension of Housing 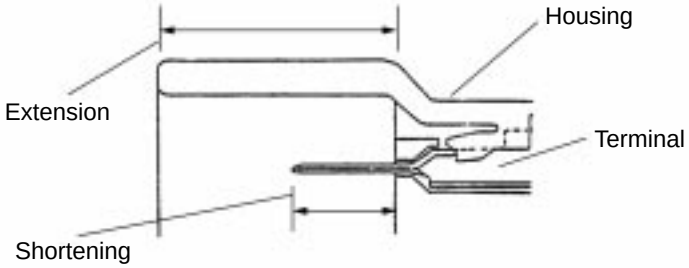	This is to prevent deformation of the terminal when it is inserted diagonally.
3. Change of Contact Structure and Introduction of Box–Shaped Structure	Expansion of contact section Stabilization of contact pressure
4. Change of Locking Shape 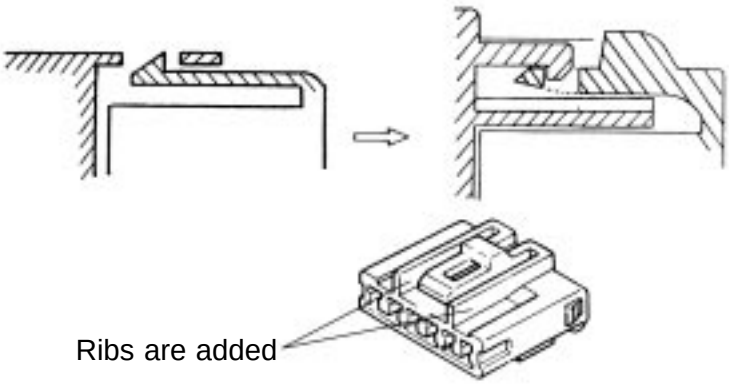	This improves the close fit of locking and you can hear the click sound and feel that the connector is completely installed.

HOW TO PERFORM FOR SYSTEM INSPECTION

This inspection procedure is a simple troubleshooting which should be carried out on the vehicle during system operation and is based on the assumption of system component trouble

Always inspect the trouble taking the following items into consideration:

- Ground point fault
- Open or short circuit of the wire harness
- Connector or terminal connection fault
- Fuse or fusible link fault

A

NOTICE:

- **This is an on–vehicle inspection during system operation. Therefore, inspect the trouble with due regard for safety.**
- **If connecting the battery directly, be careful not to cause a short circuit, and select the applicable voltage.**

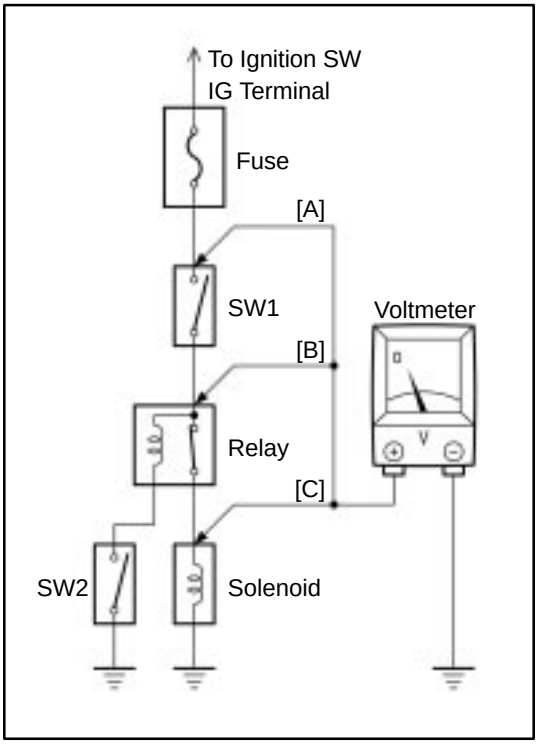

1. Voltage Check

(a) Establish conditions in which voltage is present at the check point.

Example:
[A] – Ignition SW on
[B] – Ignition SW and SW 1 on
[C] – Ignition SW, SW 1 and Relay on (SW 2 off)

(b) Using a voltmeter, connect the negative (–) lead to a good ground point or negative (–) battery terminal and the positive (+) lead to the connector or component terminal. This check can be done with a test bulb instead of a voltmeter.

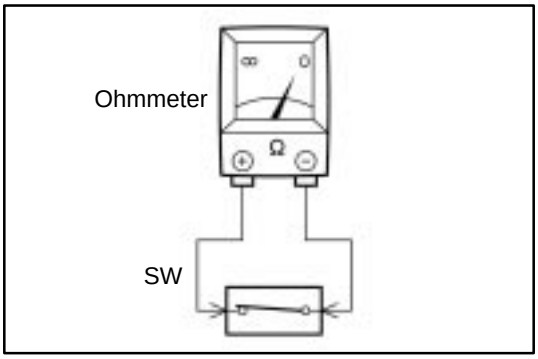

2. Continuity and Resistance Check

(a) Disconnect the battery terminal or wire so there is no voltage between the check points.

(b) Contact the two leads of an ohmmeter to each of the check points.

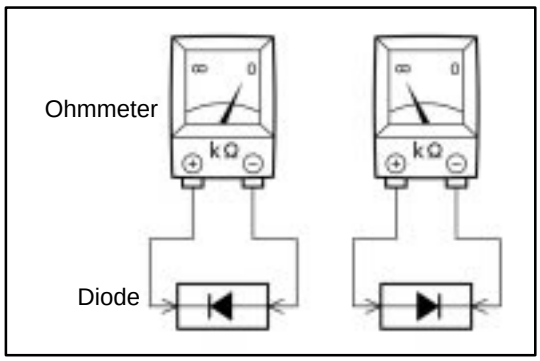

If the circuit has diodes, reverse the two leads and check again.
When touching the negative (–) lead to the diode positive (+) side and the positive (+) lead to the negative (–) side, there should be continuity. When touching the two leads in reverse, there should be no continuity.

HINT: Specifications may vary depending on the type of tester, so refer to the tester's instruction manual before performing the inspection.

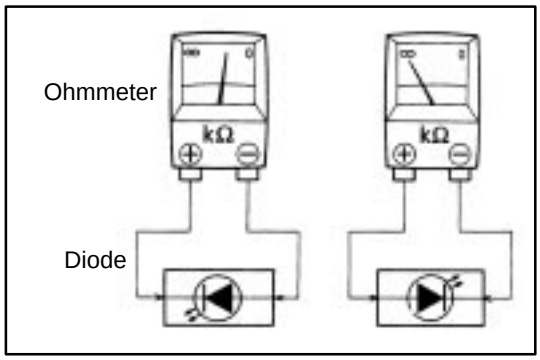

Check LED (Light Emitting Diode) in the same manner as that for diodes.

HINT:
- Use a tester with a power source of 3V or greater to overcome the circuit resistance.
- If a suitable tester is not available, apply battery voltage and check that the LED lights up.

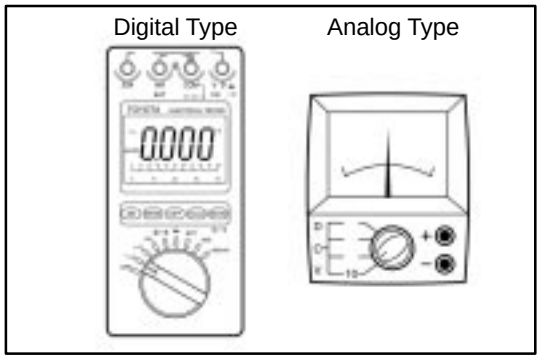

(c) Use a volt/ohmmeter with high impedance (10kΩ/V minimum) for troubleshooting of the electrical circuit.

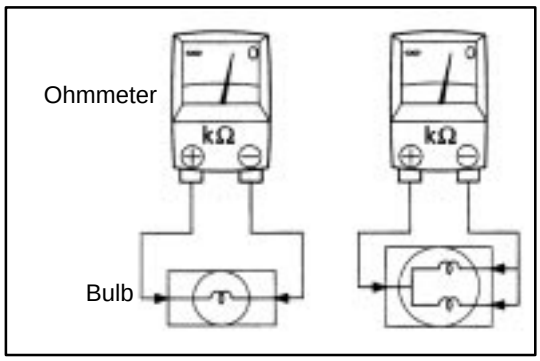

3. Bulb Check

(a) Remove the bulb.

(b) There should be continuity between the respective terminals of the bulb together with a certain amount of resistance.

(c) Apply the two leads of the ohmmeter to each of the terminals.

(d) Apply battery voltage and check that the bulb light up.

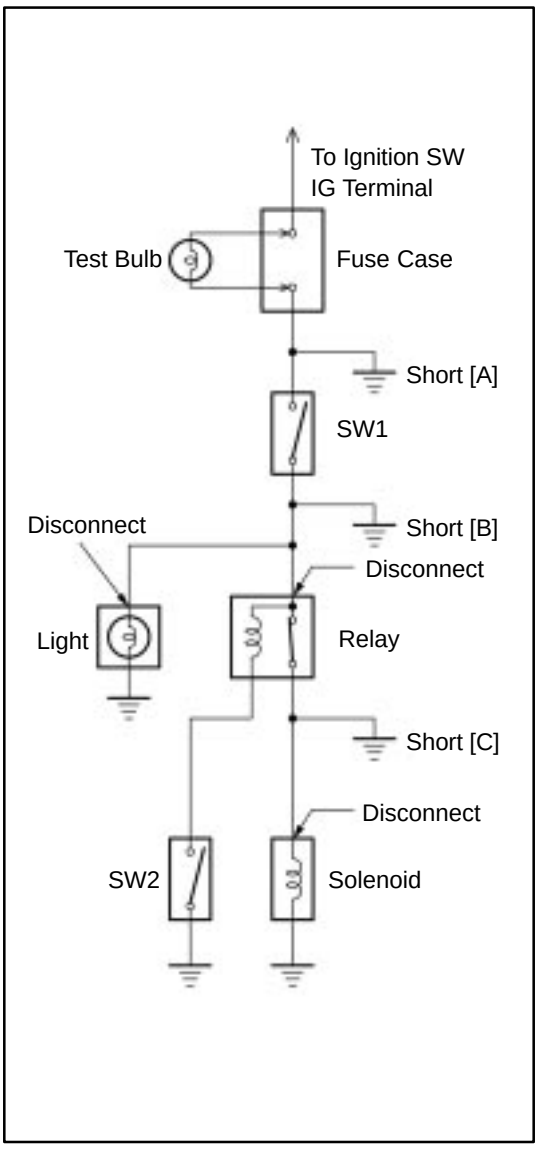

4. Finding a Short Circuit

(a) Remove the blown fuse and eliminate all loads from the fuse.

(b) Connect a test bulb in place of the fuse.

(c) Establish conditions in which the test bulb comes on.

Example:
[A] – Ignition SW on
[B] – Ignition SW and SW 1 on
[C] – Ignition SW, SW 1 and Relay on (Connect the Relay) and SW 2 off (or disconnect SW 2)

(d) Disconnect and reconnect the connectors while watching the test bulb. The short lies between the connector where the test bulb stays lit and the connector where the bulb goes out.

(e) Find the exact location of the short by lightly shaking the problem wire along the body.

CAUTION:

(a) **Do not open the cover or the case of the ECU unless absolutely necessary. (If the IC terminals are touched, the IC may be destroyed by static electricity.)**

(b) **When replacing the internal mechanism (ECU part) of the digital meter, be careful that no part of your body or clothing comes in contact with the terminals of leads from the IC, etc. of the replacement part (spare part).**

CIRCUIT PROTECTION

All electrical circuits are protected against excessive loads which might occur because of shorts or overloads in the wiring system. Such protection is provided by a fuse, circuit breaker, or fusible link, A short circuit may cause a fuse to blow or a circuit breaker to open.

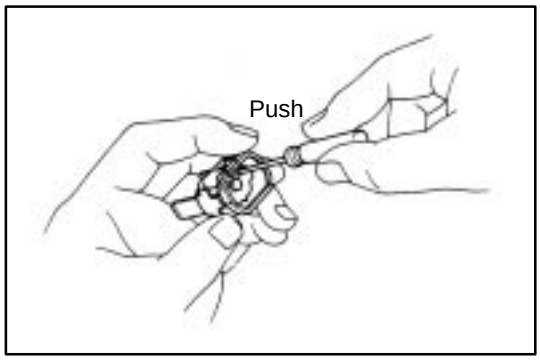

RESET CIRCUIT BREAKER

1. Remove Circuit Breaker

(a) Disconnect the negative (–) cable from the battery.

(b) Remove the circuit breaker.

2. Reset Circuit Breaker

(a) Insert the needle into the reset hole and push it.

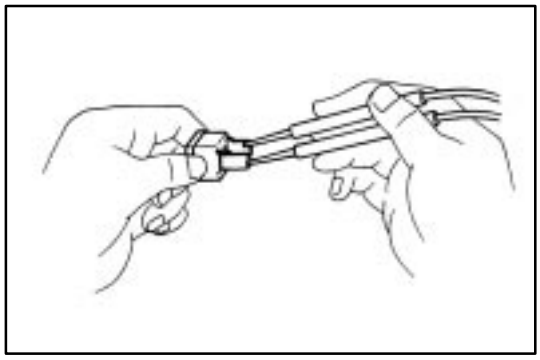

(b) Using an ohmmeter, check that there is continuity between both terminals of the circuit breaker.

If continuity is not as specified, replace the circuit breaker.

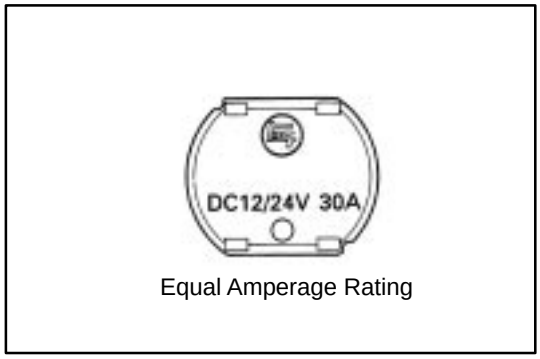

Equal Amperage Rating

HINT: If replacing the circuit breaker, be sure to replace it with a breaker with an equal amperage rating.

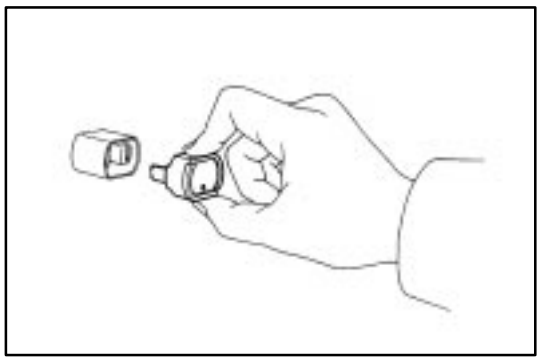

3. Install Circuit Breaker

(a) Install the circuit breaker.

(b) Connect the negative (–) cable to the battery.

HINT: If a circuit breaker continues to cut out, a short circuit is indicated. Have the system checked by a qualified technician.

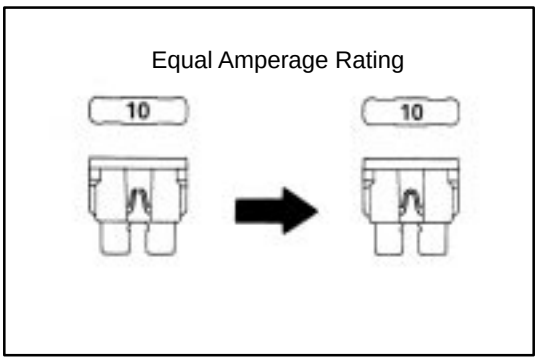

REPLACEMENT OF FUSE AND FUSIBLE LINK

HINT: If replacing the fuse or fusible link, be sure to replace it with a fuse or fusible link with an equal amperage rating.

A

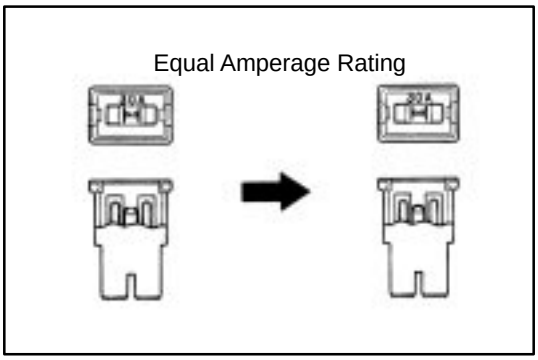

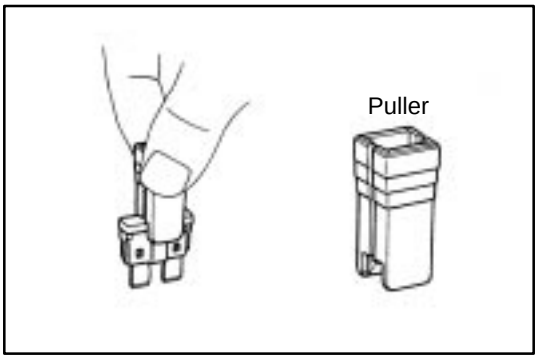

NOTICE:

1. **Turn off all electrical components and the ignition switch before replacing a fuse or fusible link. Do not exceed the fuse or fusible link amperage rating.**
2. **Always use a fuse puller for removing and inserting a fuse. Remove and insert straight in and out without twisting. Twisting could force open the terminals too much, resulting in a bad connection.**

If a fuse or fusible link continues to blow, a short circuit is indicated. The system must be checked by a qualified technician.

HINT: The puller is located at Junction Block No.2.

PREPARATORY ITEMS

Tool	Crimping tool	AMP Part No. 169060	For caulking press sleeves
	Special tool	Refer to the following illustration	To remove the terminal
	SST	09991–00500	To remove the 0.64 connector terminal
Gauge	Caliper	0–150 mm	To measure the diameter of the core
Others	Press sleeve	82999–12010 (Red) 82999–12020 (Blue) 82999–12030 (Yellow)	To connect wires
	Silicon tape	08231–00045	To waterproof the connected section

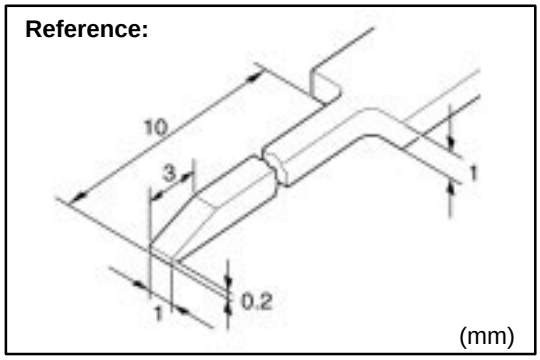

Special Tool

HINT: To remove the terminal from the connector, please construct and use the special tool or like object shown on the left.

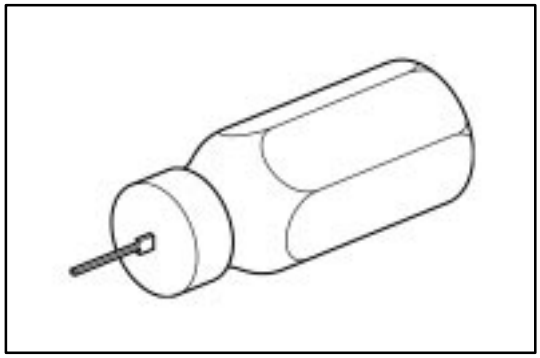

Preparation of the SST to release the 0.64 connector terminal.
SST 09991–00500

HINT:
This is a SST for releasing terminals from 0.64 connectors.

CONNECTOR REPAIR

The repair parts now in supply are limited to those connectors having common shapes and terminal cavity numbers. Therefore, when there is no available replacement connector of the same shape or terminal cavity number, please use one of the alternative methods described below. Make sure that the terminals are placed in the original order in the connector cavities, if possible, to aid in future diagnosis.

1. When a connector with a different number of terminals than the original part is used, select a connector having more terminal cavities than required, and replace both the male and female connector parts.

   EXAMPLE: You need a connector with six terminals, but the only replacement available is a connector with eight terminal cavities. Replace both the male and female connector parts with the eight terminal part, transferring the terminals from the old connectors to the new connectors.

2. When several different type terminals are used in one connector, select an appropriate male and female connector part for each terminal type used, and replace both male and female connector parts.

   EXAMPLE: You need to replace a connector that has two different types of terminals in one connector. Replace the original connector with two new connectors, one connector for one type of terminal, another connector for the other type of terminal.

3. When a different shape of connector is used, first select from available parts a connector with the appropriate number of terminal cavities, and one that uses terminals of the same size as, or larger than, the terminal size in the vehicle. The wire lead on the replacement terminal must also be the same size as, or larger than, the nominal size of the wire in the vehicle. (”Nominal” size may be found by looking at the illustrations in the section F or by direct measurement across the diameter of the insulation). Replace all existing terminals with the new terminals, then insert the terminals into the new connector.

   EXAMPLE: You need to replace a connector that is round and has six terminal cavities. The only round replacement connector has three terminal cavities. You would select a replacement connector that has six or more terminal cavities and is not round, then select terminals that will fit the new connector. Replace the existing terminals, then insert them into the new connector and join the connector together.

TERMINAL REPLACEMENT

These steps **must** be followed when replacing a terminal.

Step 1. Identify the connector and the terminal type.

↓

Step 2. Disconnect the terminal from the connector.

↓

Step 3. Replace the terminal.

↓

Step 4. Install the terminal into the connector.

Step 1. Identify the connector and the terminal type.

Confirm whether the connector you require is the non–waterproof, waterproof or combined terminal type connector from the pictures provided in the following charts.

Connector	Description
Non–Waterproof Type	Those connectors which are not of the waterproof or combined terminal type.
Waterproof Type	Waterproof material (hole plug or terminal packing) is provided on the terminal/connector body.
Combined Terminal Type	Terminals of different shape/size are located in one connector.

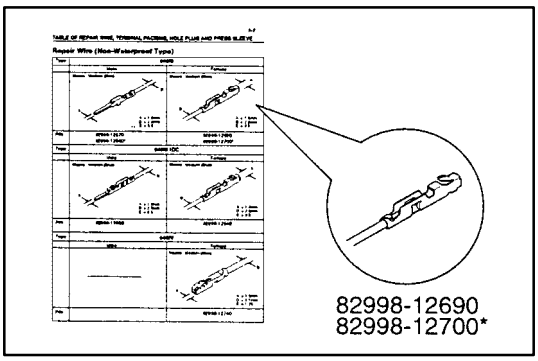

1. Terminal with Wire

Identify the part number of the terminal with wire by picking out the corresponding illustration from the pictures provided on the following charts.

HINT: In some of the illustrations, there are two part numbers for the same illustration of terminal with wire, because although the shapes of the terminals are completely the same, there is a difference in with /without gold–plating (gilded).

Remark: The length of the wire connected to the terminal is approximately 150 mm.

NOTICE:

- **When the terminal used is gold plated, be sure to replace it with a gold plated terminal when marking repairs.**
- **Do not use male and female terminals which are made of different materials from each other.**

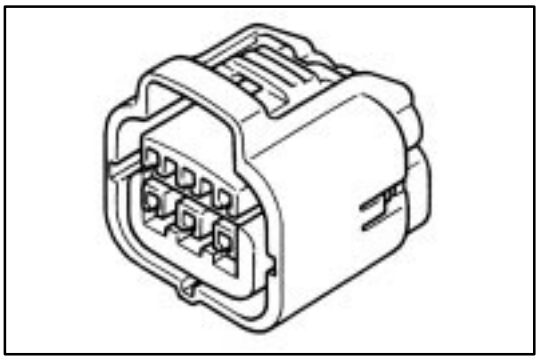

2. Connector Body

(a) Identify the part number of the corresponding terminal with wire according to the above–mentioned 1.

(b) Identify the part number of the connector body by picking out the correct one from the illustrations according to the number of terminals and the shape.

HINT:

(a) If you can find no connector which matches the type you require, pick out male and female connector bodies as a set which have more terminals than you require.

For the combined terminal type connector body, pick out and appropriate connector body for each terminal being used.

Example:
When two types of terminal are used in one connector body, pick out a male and female for two different connector bodies.

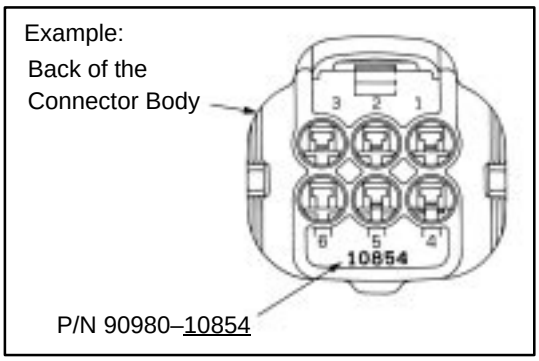

(b) The part number has been stamped on the back of the connector body. (This will continue to be done to new types of connector.)

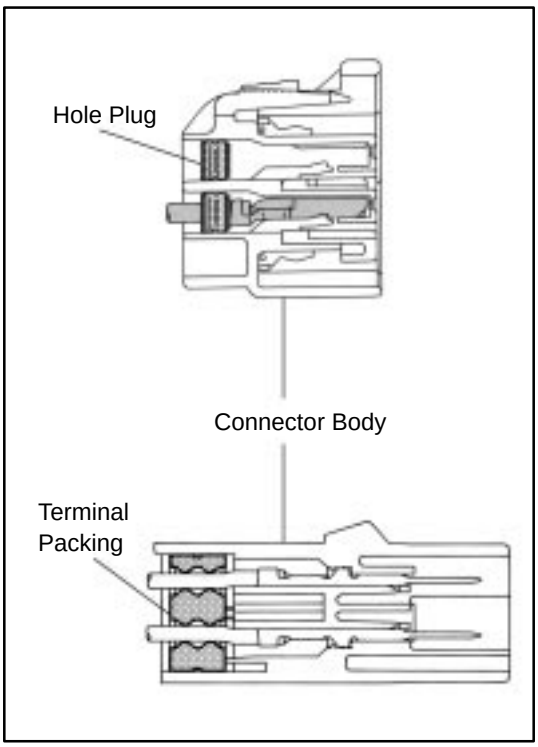

3. Hole Plug/Terminal Packing

(a) Identify the part number of the appropriate terminal with wire/connector body from the illustrations of waterproof type connector according to the above–mentioned 1 and 2.

(b) Identify the part number of the hole plug/terminal packing from the corresponding illustration.

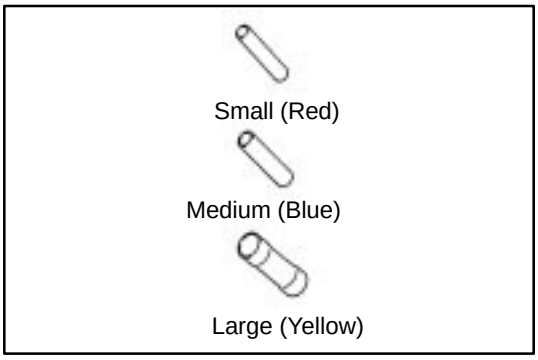

4. Sleeve

When connecting two wires using a sleeve, select the sleeve according to the following table.

Wire Outside Diameter	Sleeve Size (Color)
0.2–1.0 mm	Small (Red)
1.0–2.0 mm	Medium (Blue)
3.0–5.0 mm	Large (Yellow)

(a) When size is based on the <u>outside diameter</u> of the wire.

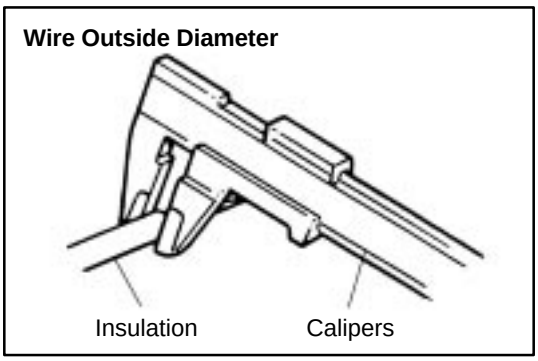

* \ *	0.3	0.5	0.85	1.25	2	3	5
0.3	S	M	M	M	M	L	L
0.5	M	M	M	M	M	L	L
0.85	M	M	M	M	L	L	L
1.25	M	M	M	M	L	L	L
2	M	M	L	L	L	L	—
3	L	L	L	L	L	L	—
5	L	L	L	L	—	—	—

∗ Nominal size of the wire

(b) When size is based on the nominal size of the wire.

Sleeve size

S : Small (Red)
M : Medium (Blue)
L : Large (Yellow)

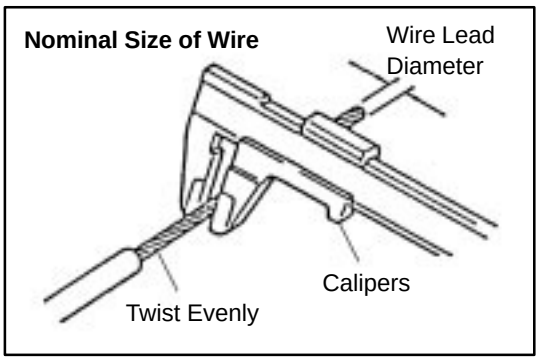

HINT: To calculate the ”Nominal Size” of the wire.

Nominal size =

$$\frac{3.14 \times (\text{Diameter of stripped wire harness})^2}{4}$$

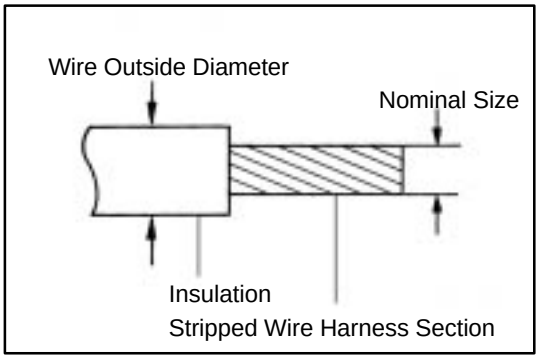

HINT: Outside Diameter and Nominal Size

Step 2. Disconnect the Terminal from the Connector.

1. Disconnect Connector

To pull apart the connectors, pull on the connector itself, not the wire harness.

HINT: Check to see what kind of connector you are disconnecting before pulling apart.
Press down type is mainly used.

Example:

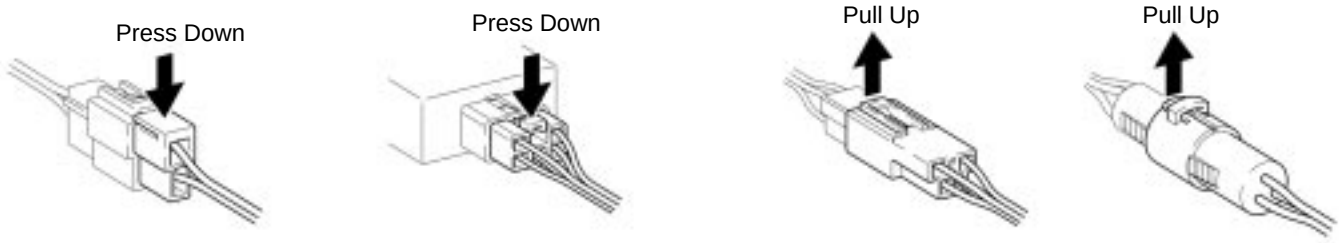

Refereance:

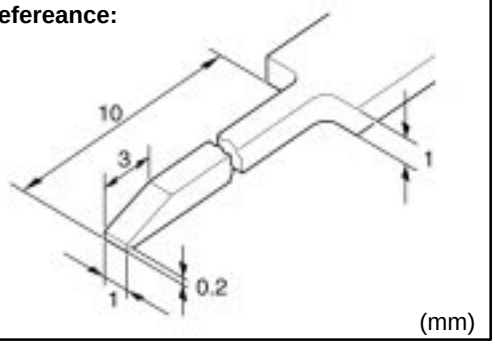

2. Prepare the Special Tool

HINT: To remove the terminal from the connector, please construct and use the special tool or like object shown on the left.

Example:

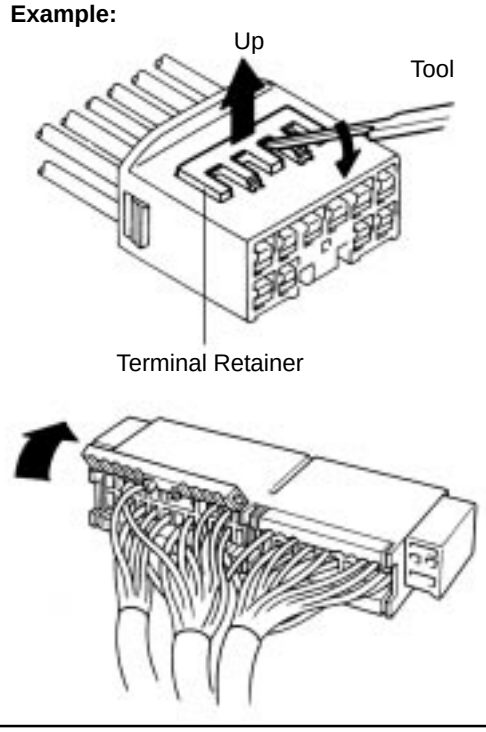

3. Disengage the double locking device or terminal retainer.

(a) Locking device must be disengaged before the terminal locking clip can be released and the terminal removed from the connector.

(b) Use a special tool or the terminal pick to unlock the double locking device.

NOTICE:
Do not remove the terminal retainer from connector body.

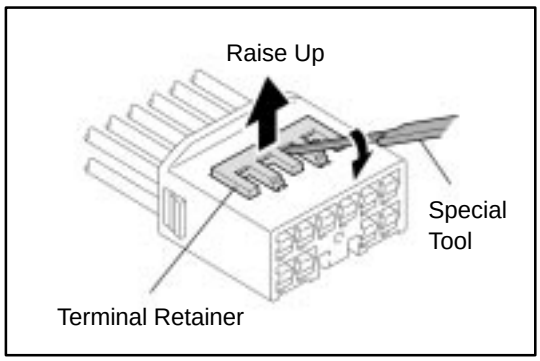

Type A (For 1.0II, 1.8, 2.3II, 4.8 and 8.0 of Non–Waterproof Type Connector)

(1) Using the special tool, raise the retainer up to the temporary lock position.

HINT: The needle insertion position varies according to the connector's shape (number of terminals, etc.), so check the position before inserting it.

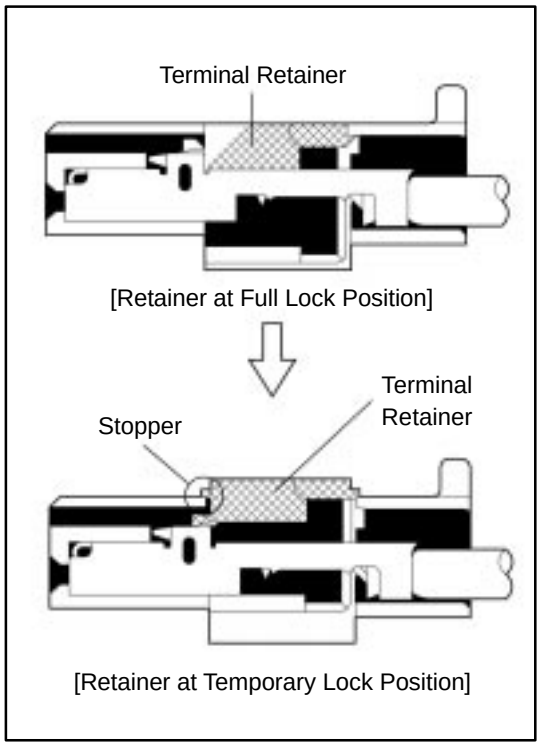

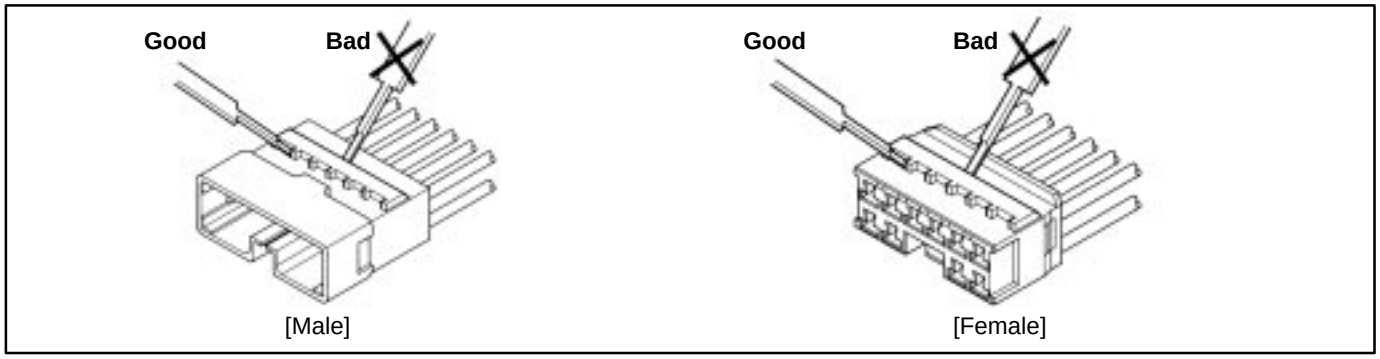

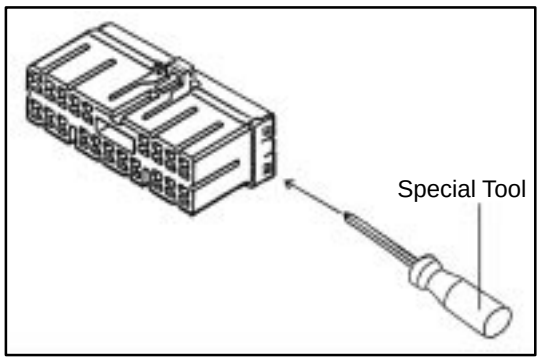

Type B (For 1.8, 1.0 and TLC of Non–Waterproof Type Connector)

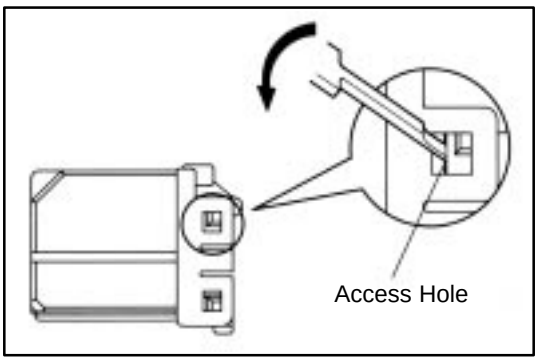

(1) Press the special tool at a 45° angle into the locking lug access hole as shown.

Raise the double locking device up as far as possible.

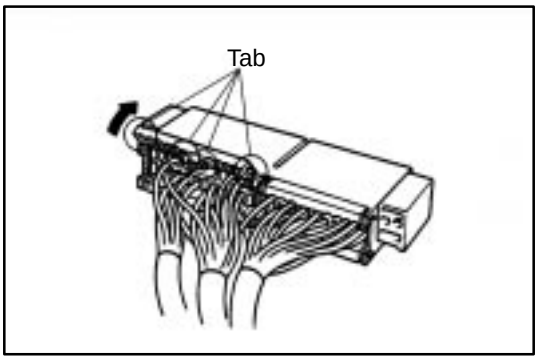

(2) Remove the special tool and open the double locking device

NOTICE:
TLC housing is not be reusable. Please replace it with the new one after replacement of the terminal.

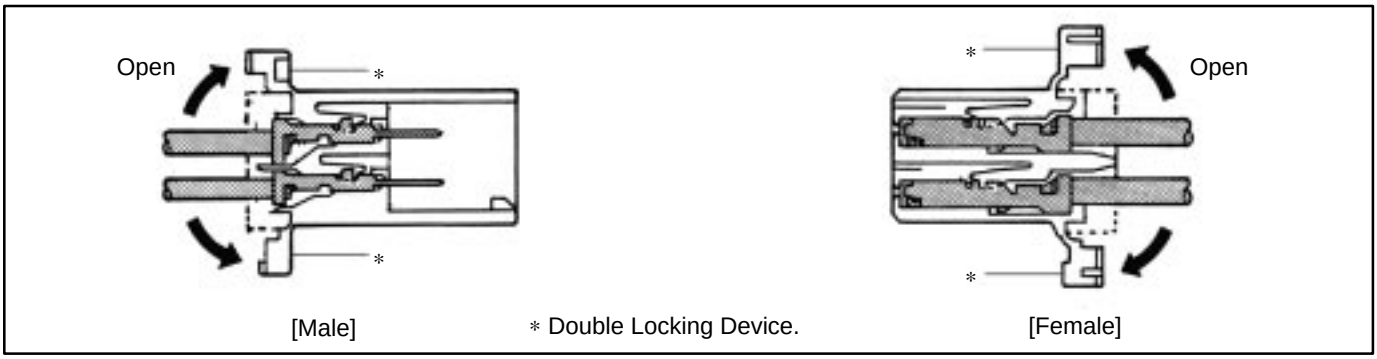

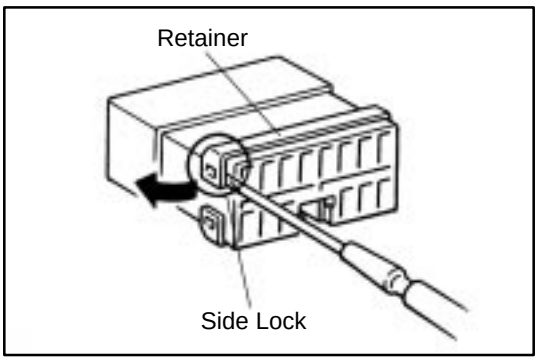

Type C (For TNS, FTC Type Connector)

(1) Widen the side lock part of the retainer from side to side using the special tool.

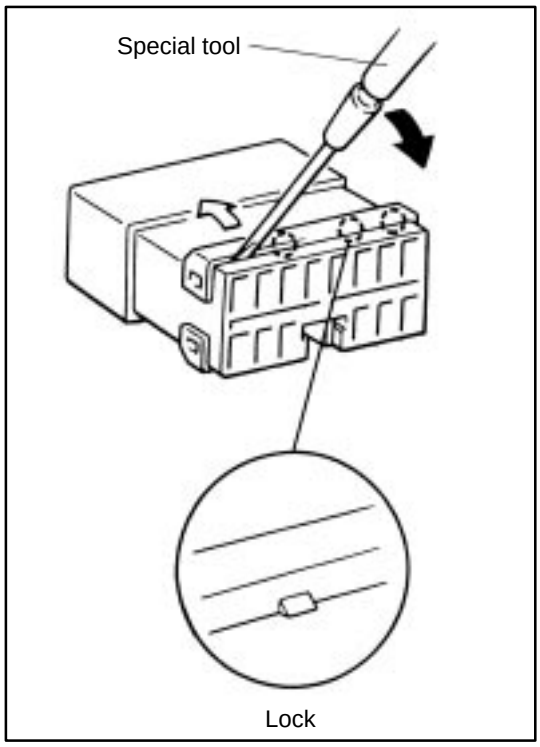

(2) Inset the special tool into the chink between the retainer and the terminal itself. Then pry it to the direction of the arrow shown in the illustration and push the retainer up to release the lock.

NOTICE:

- **Do not insert the special tool too much. It may cause damage on the fit section of the terminal and the wire harness.**
- **TNS housing is not reusable. Please replace it with the new one after replacement of the terminal.**

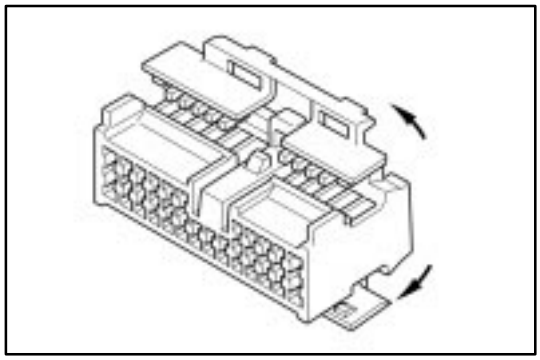

Type D (For 1.3 of Non–Waterproof Type Connector)

[Case 1]

(1) Use the special tool to unlock the double locking device.

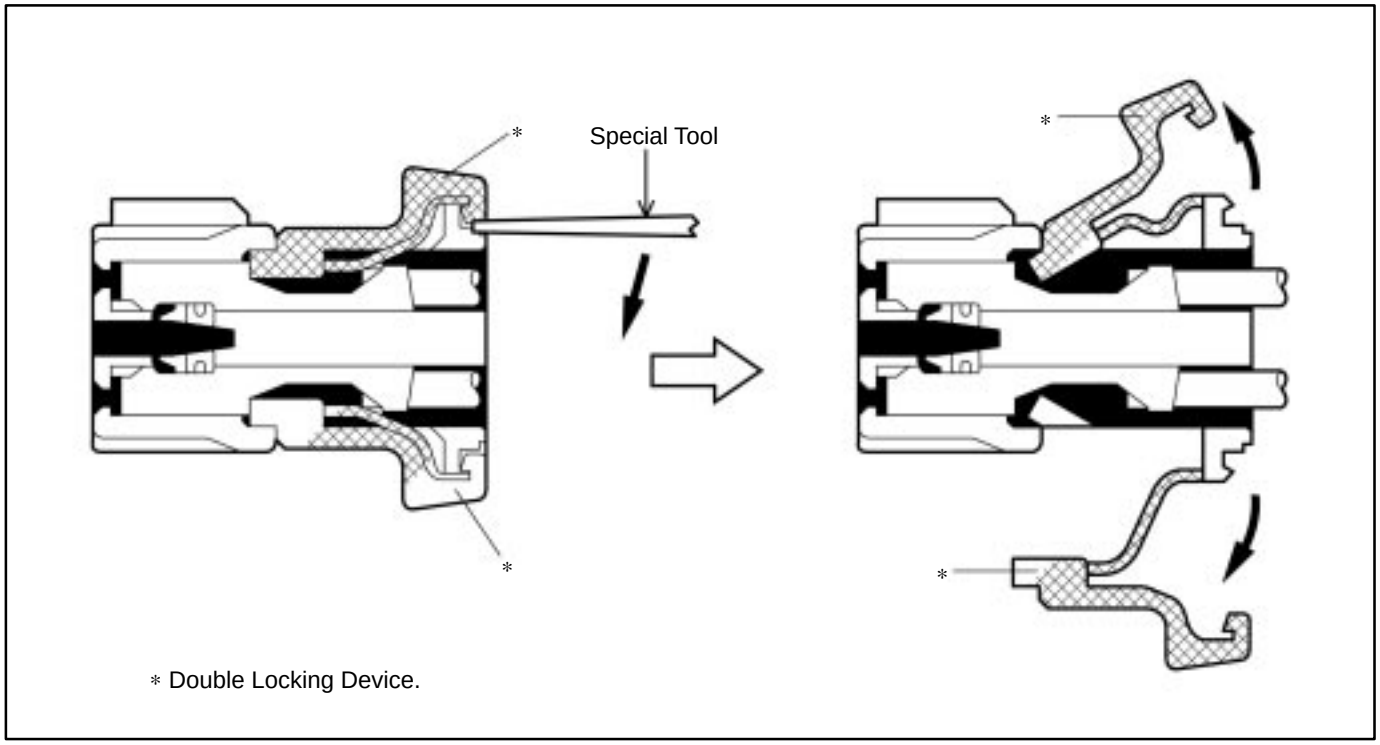

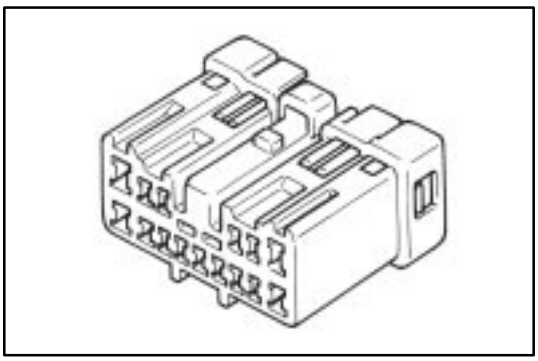

[Case 2]

(1) Using the special tool, push the terminal retainer locking lug (clip) and pull the terminal retainer up to the temporary lock position.

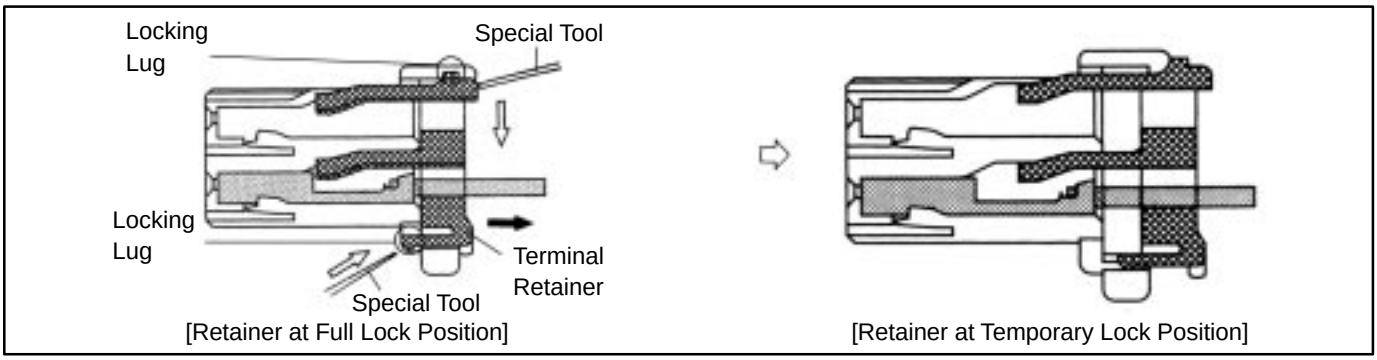

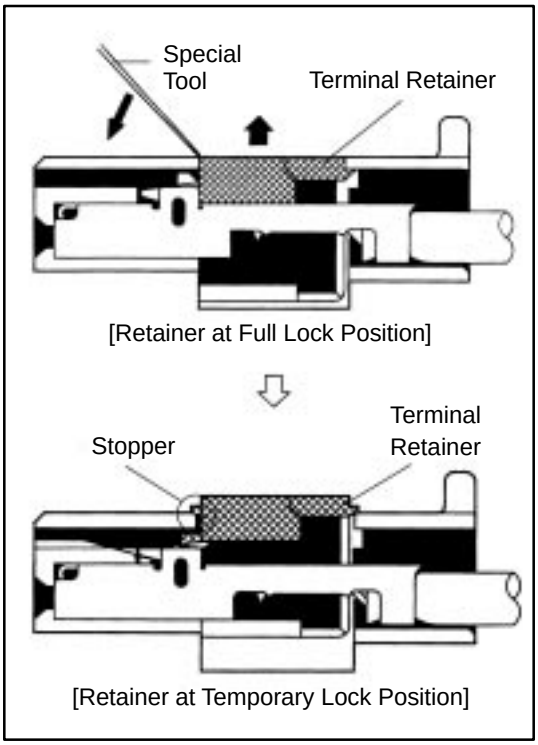

[Case 3]

(1) Using the special tool, raise the retainer up to the temporary lock position.

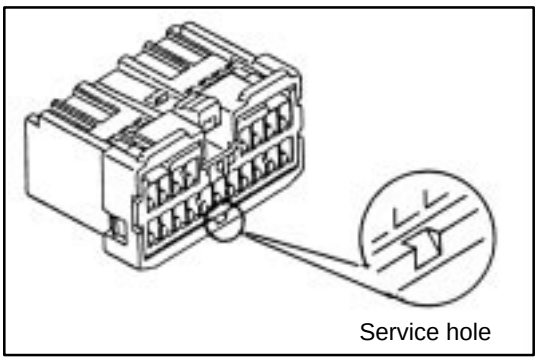

[Case 4]

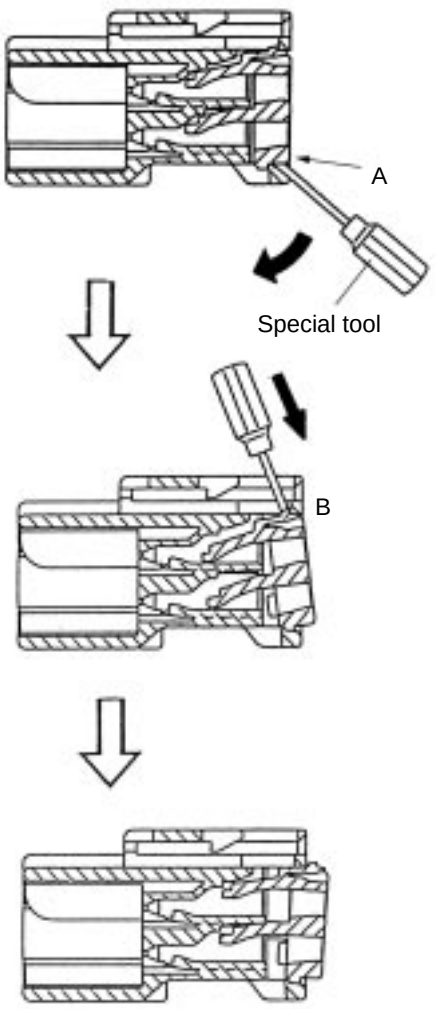

Appearance when the double locking is released

(1) Insert the special tool into the service hole and move it to the direction of the arrow to release the lock on the side A.

(2) Push the lock on the side B up by the special tool and release the lock. Then pull the retainer forward.

Type E (For 1.8, 2.3, 2.3II, 4.8, 6.3 and 8.0 of Waterproof Type Connector)

HINT: Terminal retainer color is different according to connector body.
Example:

Terminal Retainer	:	Connector body
Black or White	:	Gray
Black or White	:	Dark Gray
Gray or White	:	Black

[Case 1]
Type where terminal retainer is pulled up to the temporary lock position (Pull Type).

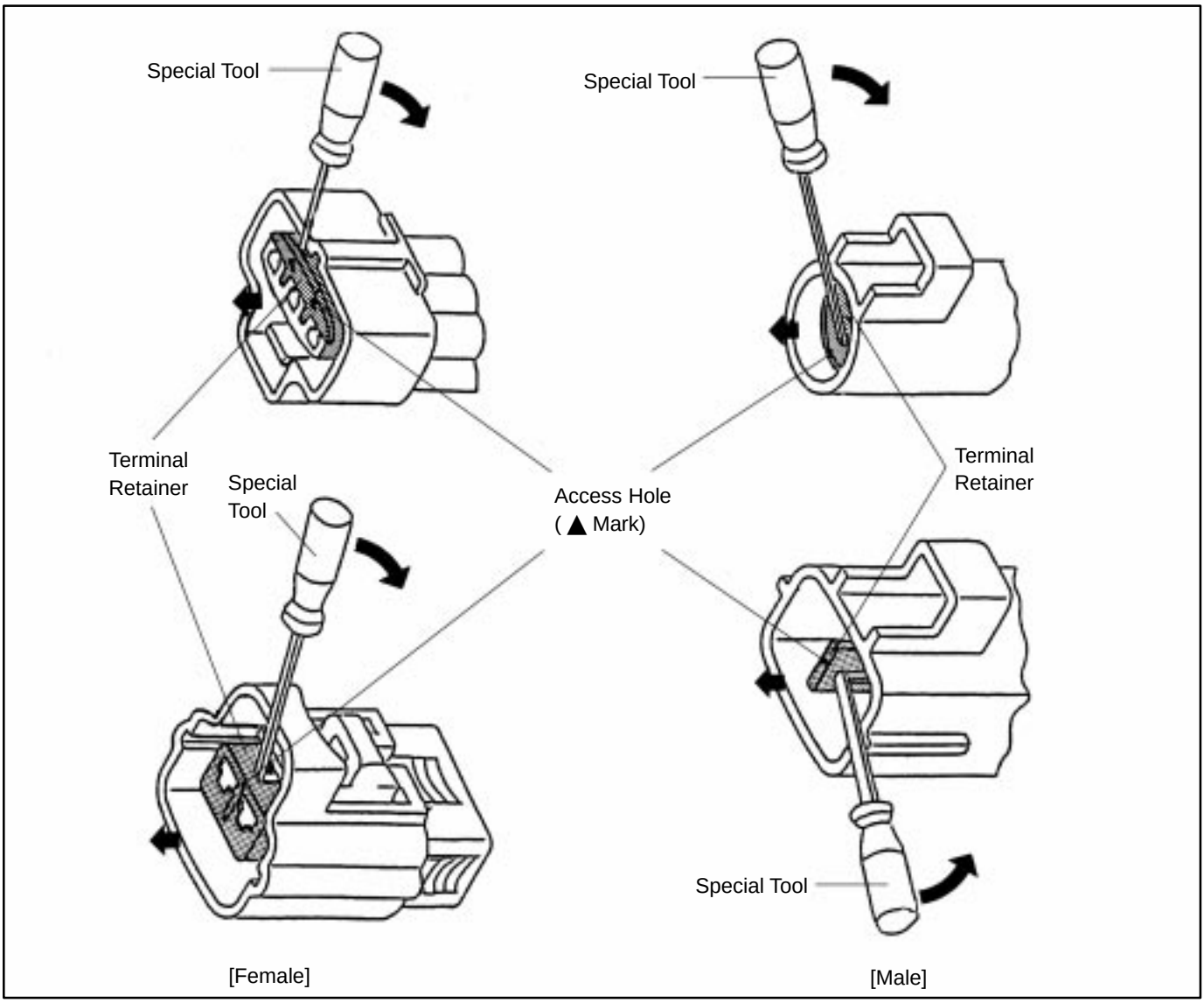

(1) Insert the special tool into the terminal retainer access hole (▲ Mark) and pull the terminal retainer up to the temporary lock position.

HINT: The needle insertion position varies according to the connector's shape (Number of terminals etc.), so check the position before inserting it.

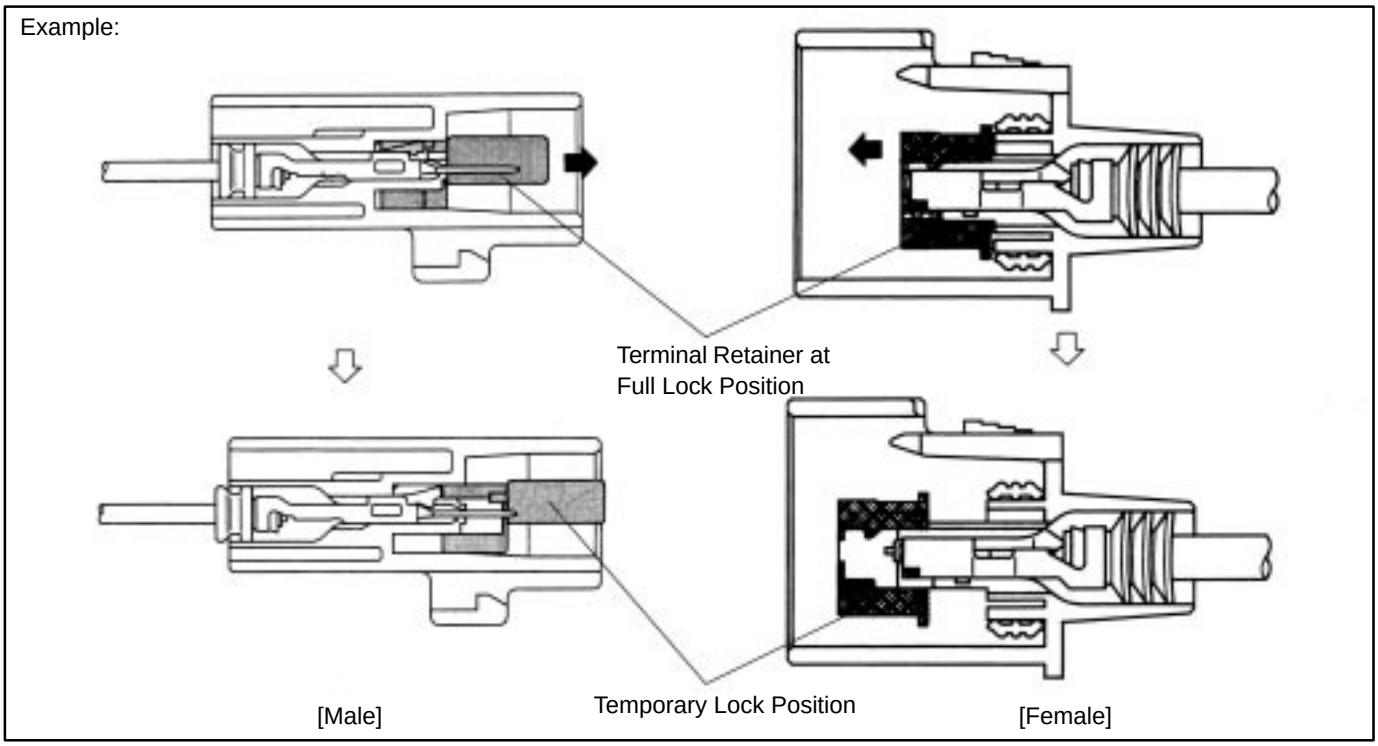

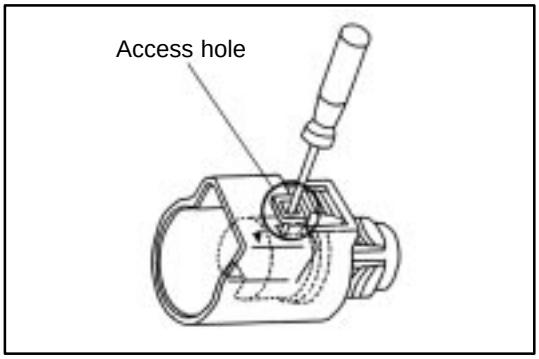

HINT: In some cases insert the special tool from the access hole on the flank of the housing.

[Case 2]

Type which cannot be pulled as far as Power Lock

HINT: There are few cases of this type of connector

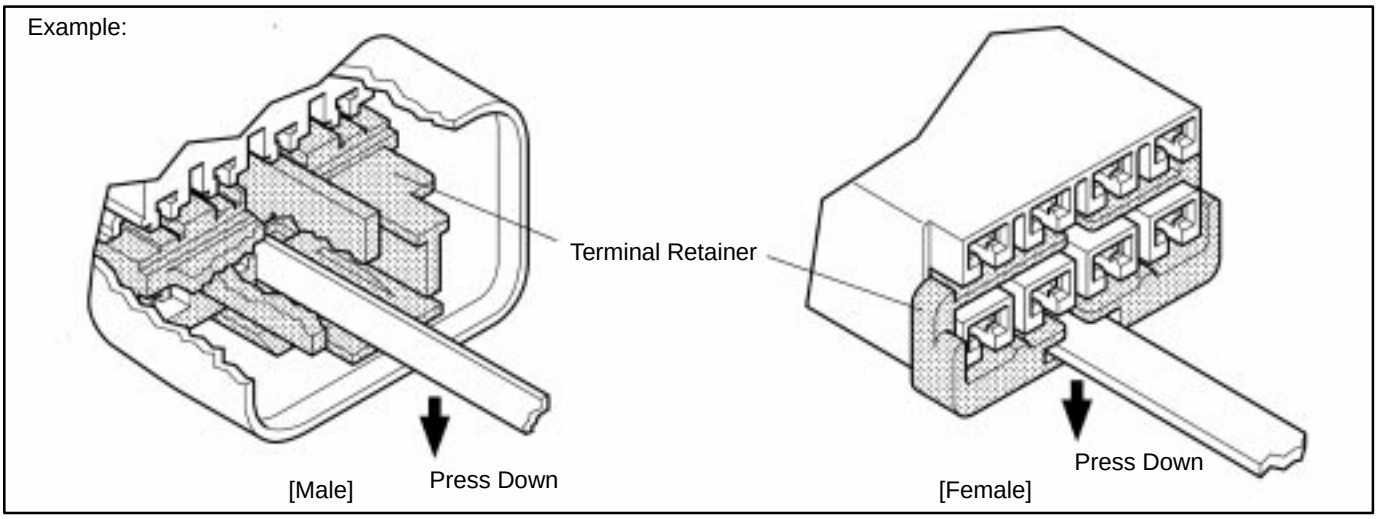

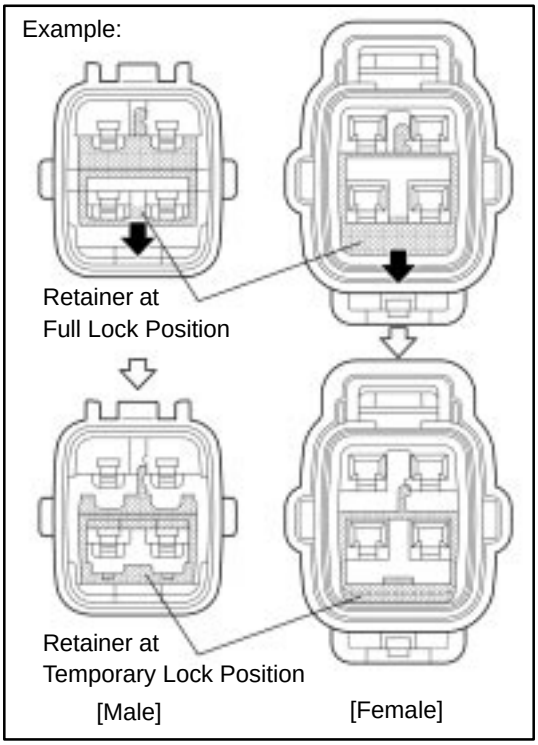

(1) Insert the tool straight into the access hole of terminal retainer as shown.

Push the terminal retainer down to the temporary lock position.

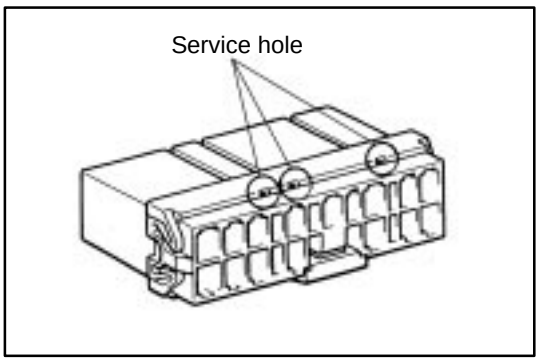

Type F (For C–Type Connector)

(1) Insert the special tool into the service hole.

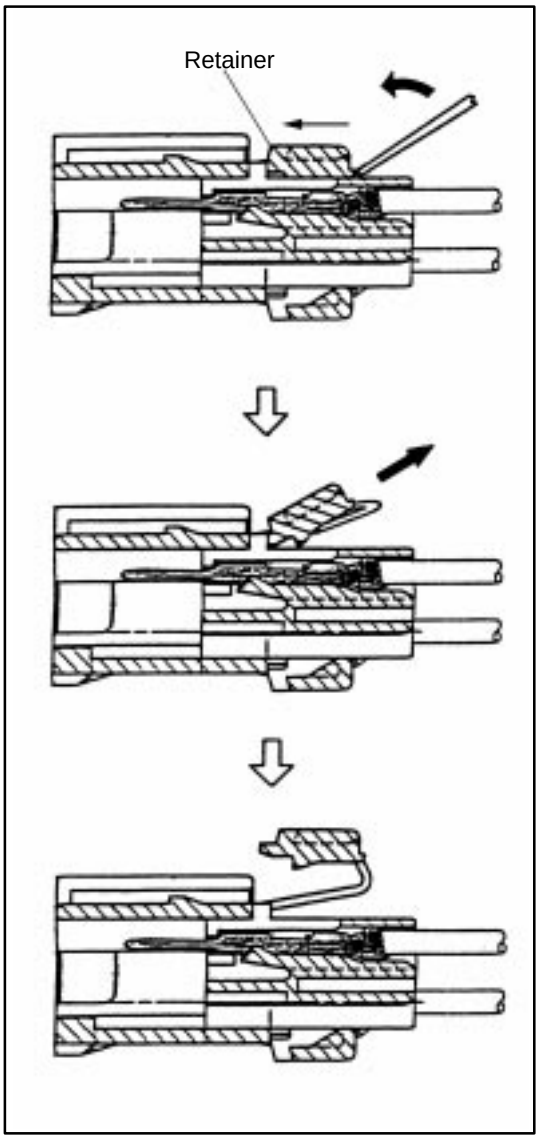

(2) Move the special tool to the direction of the arrow and release the lock.

HINT: Lift the retainer up after moving it to the direction of the thin arrow shown in the illustration.

(3) Pull the retainer forward by hand and remove the retainer from the housing.

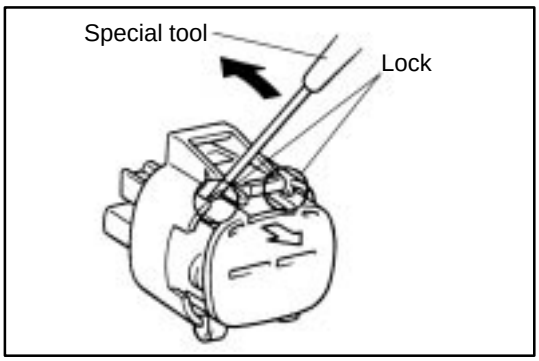

Type G

- Insert the special tool into the position shown in the illustration. Pry it to the direction of the arrow and push the lock up to release it.

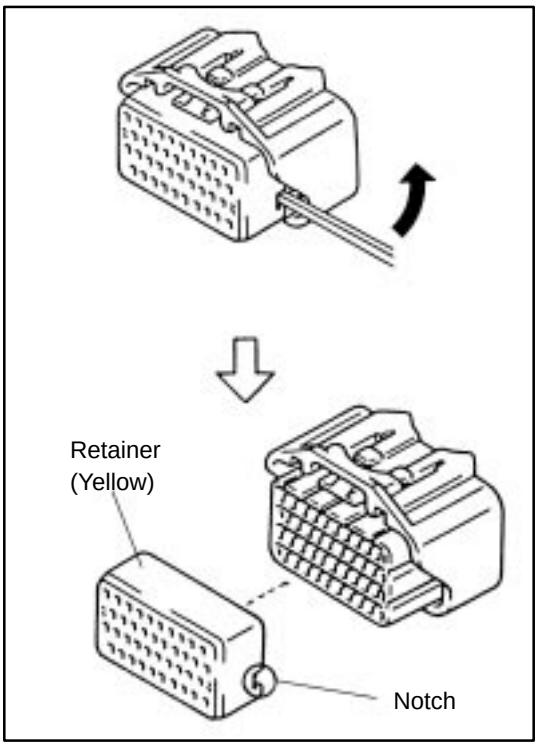

Type H (For 1.0II Type Connector)

(1) Move the special tool into the notch of the retainer to the direction of the arrow with the edge of the housing as the fulcrum. Then the pull the retainer out.

NOTICE:
Do not insert the special tool into areas except notches. (This may damage the seal ring that is attached behind the retainer.)

(2) As same as the procedure (1), pull the retainer straight out using hand after releasing the lock on the other side.

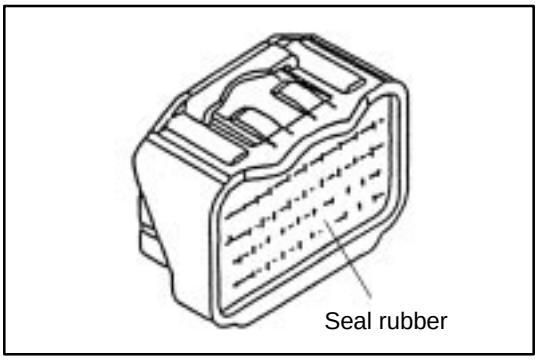

NOTICE:
- **Do not remove the seal rubber when pulling the terminal out.**
- **If the seal rubber is peeled off when puling the terminal out, press it down to stick it to the original condition.**
- **Be sure and not fit the connector when the retainer is not installed**.

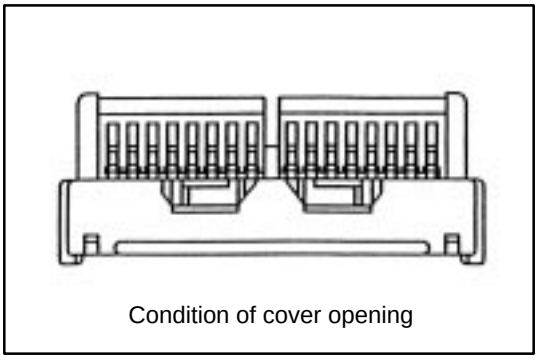

Type I (For SFPC Type Connector)

(1) Open the cover (white)

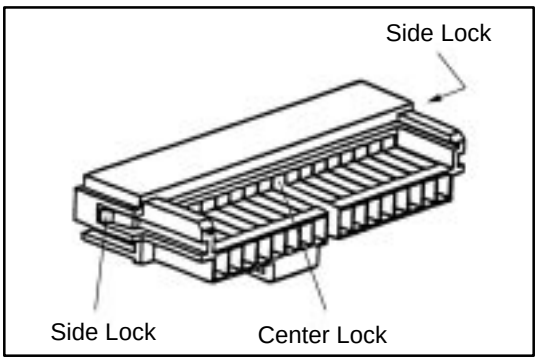

(2) Remove the side lock of the retainer. (One side)

(3) Remove the center lock of the housing.

(4) Remove the side lock of the retainer. (The other side)

NOTICE:
- **Following the above order is not required.**
- **No center lock on the housing with ten poles.**

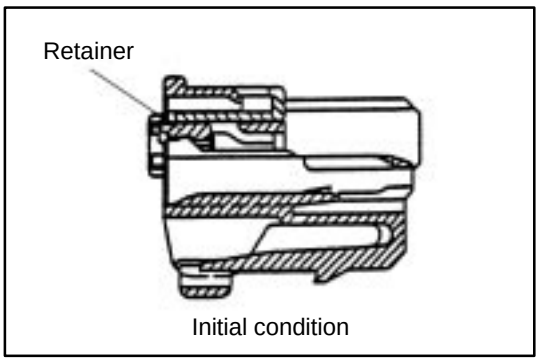

(5) Move the retainer until it becomes the initial condition.

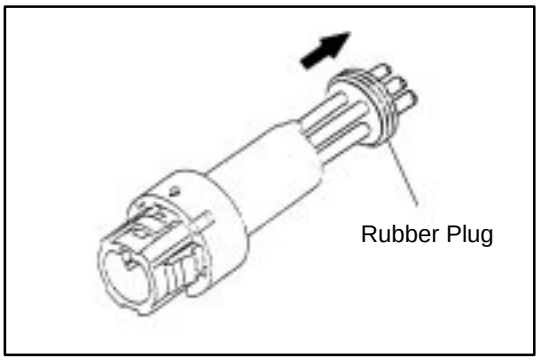

Type J

[Male]

(1) Remove the rubber plug.

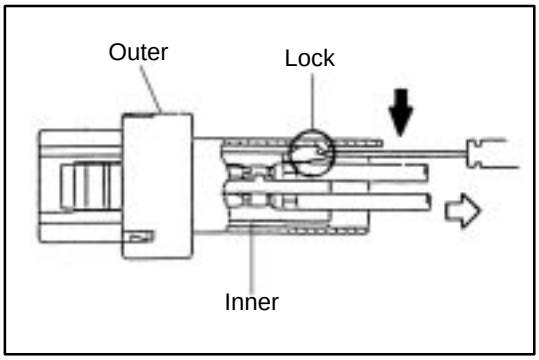

(2) Push the lock of the inner using the special tool.

(3) Pull the wire to the direction of the arrow pushing the lock up and remove the inner from the outer.

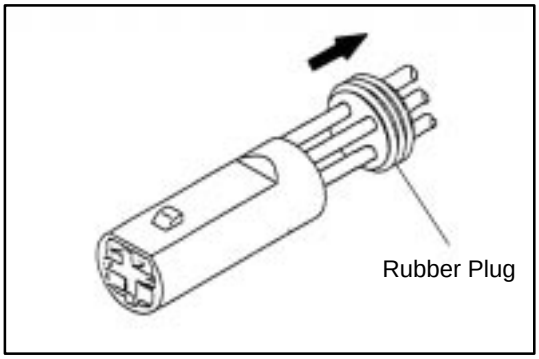

[Female]

(1) Remove the rubber plug.

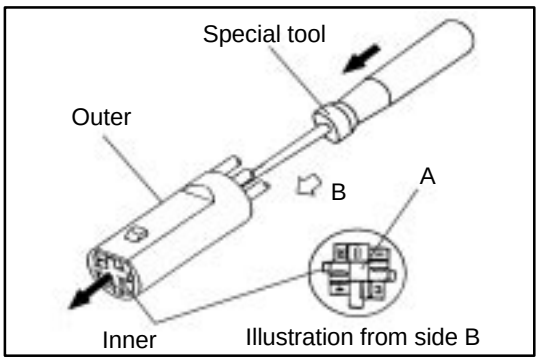

(2) Insert the special tool into the outer shown in the illustration. Then push the area A of the inner and remove the inner from the outer.

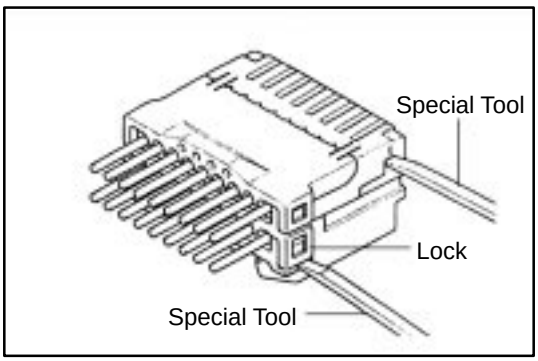

Type J (For Insulation Displacement Connector)

(1) Separate Connector

Using a special tool, release the lock and separate the connector into 2.

NOTICE:
Do not apply too muck force to the lock arm.

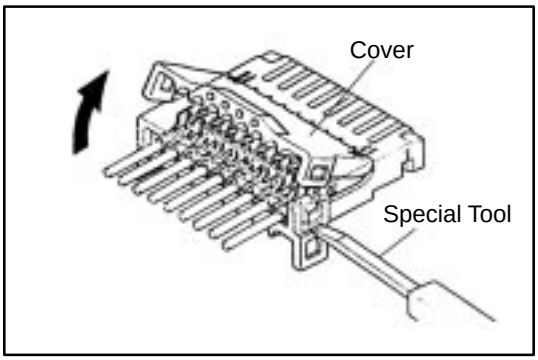

(2) w/ Cover : Open Connector Cover

Using a special tool, release the lock and open the cover.

NOTICE:
Do not apply too much force to the lock arm.

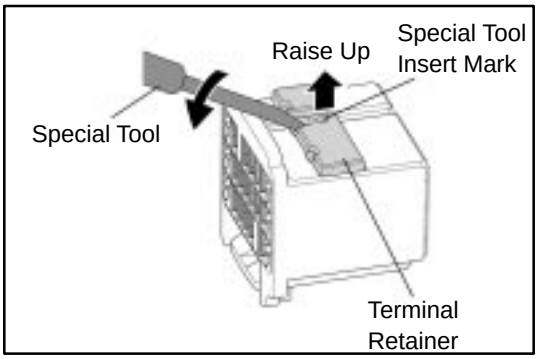

Type K (0.64 Type Connector)

(1) Using the special tool, raise the retainer up to the temporary lock position.

HINT: The needle insertion position varies according to the connector's shape (number of terminals, etc.), so check the position before inserting it.

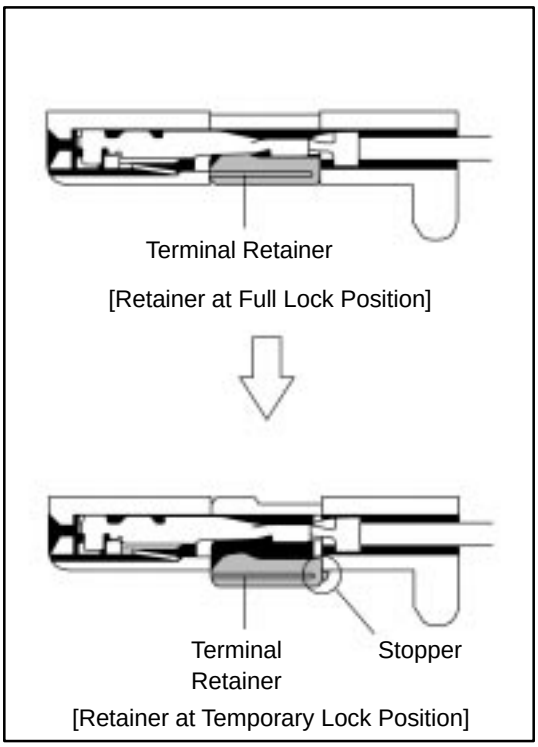

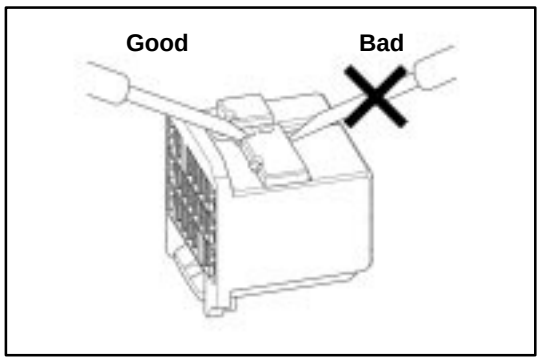

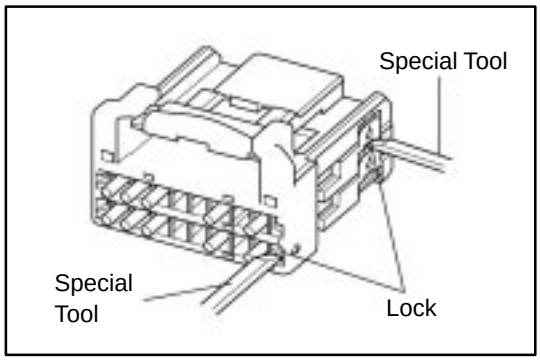

Type L (0.64 of Insulation Displacement Connector (IDC) Type)

(1) Remove the Lower Housing

Using a special tool, release the lock and remove the lower housing.

NOTICE:

- **Do not apply too much force to the lock arm.**
- **Mark the upper housing and lower housing to prevent mistakes when putting them together.**

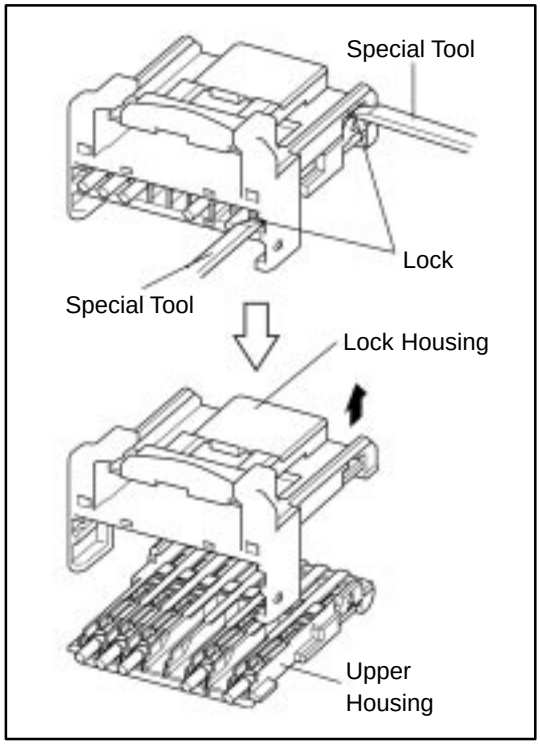

(2) Remove the Upper Housing

Using a special tool, release the lock and remove the upper housing from the lock housing.

NOTICE:

- **Do not apply too much force to the lock arm.**
- **Mark the upper housing and lower housing to prevent mistakes when putting them together.**

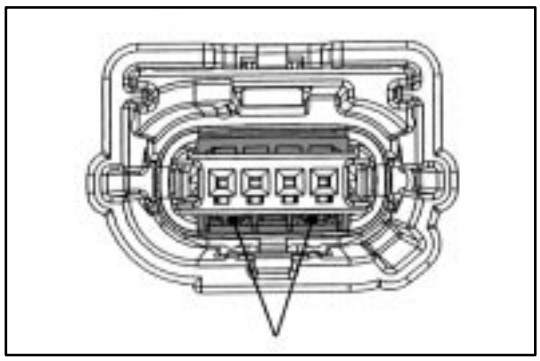

Type M (0.64 of Splash Proof Connector)

(1) Release Terminal retainer.
Insert Special Tool at the location shown in the figure left.

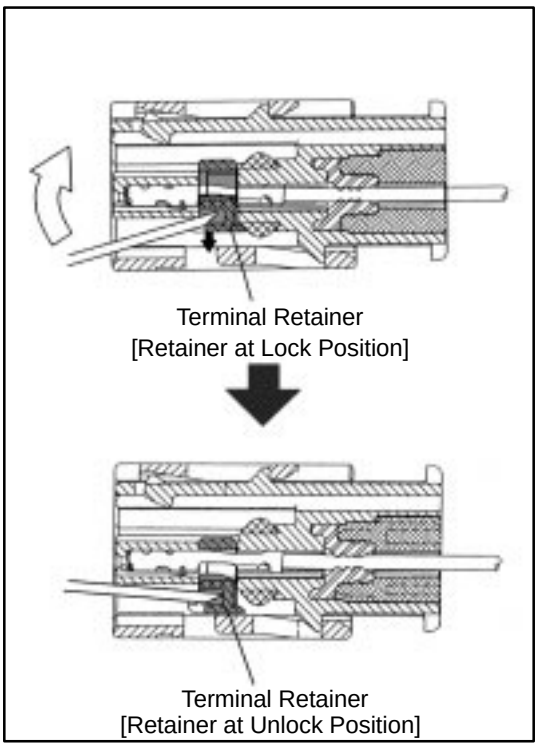

Move Special Tool in the direction of arrow.

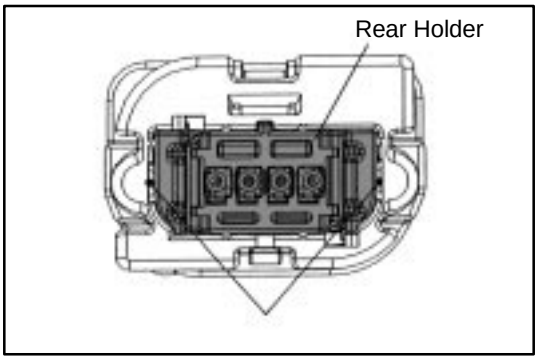

(2) Release Rear holder.
Insert Special Tool at the location shown in the figure left.

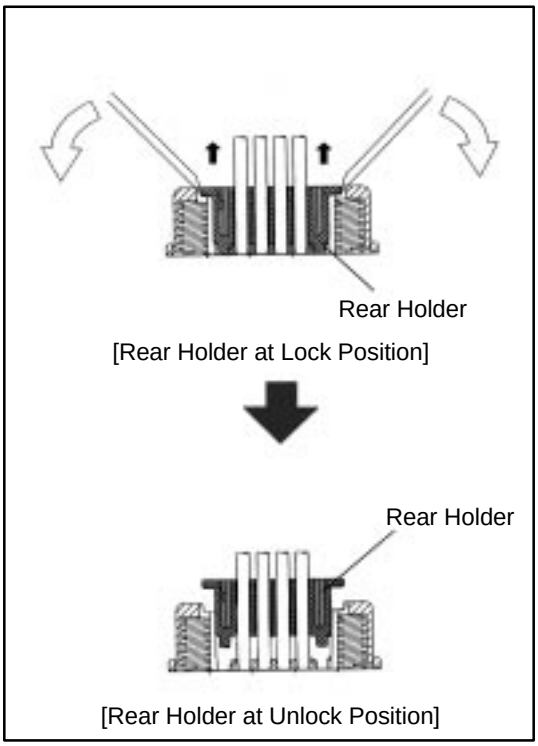

Move Special Tool in the direction of arrow.

NOTICE:

- **Do not remove Rear holder from Connector housing.**
- **If Rear holder completely comes off the housing, replace Connector with a new one.**

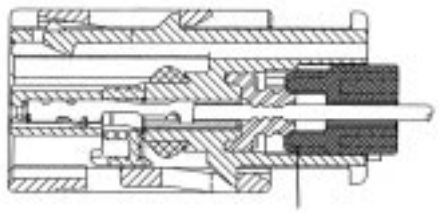

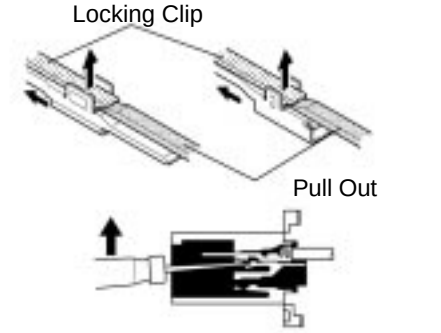

4. Disconnect Terminal from Connector

(a) Determine the primary locking system from the charts.
1. Lock Located on terminal
2. Lock Located on connector
3. Method of entry and operation

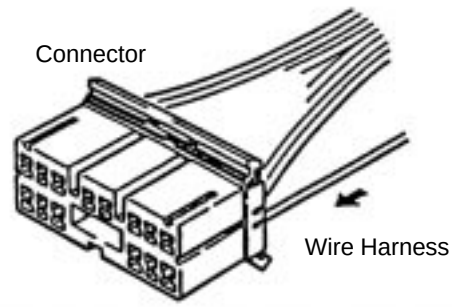

(b) Push the terminal gently into the connector and hold it in this position.

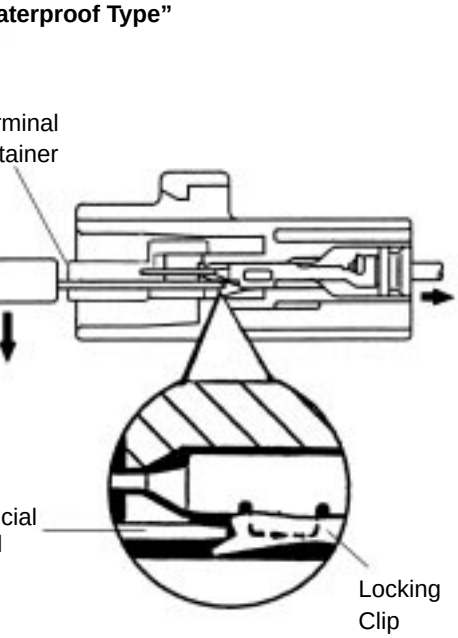

(c) Insert the special tool into the connector in the direction shown in the chart.

(d) Move the locking clip to the unlock position and hold it there.

NOTE: Do not apply excessive force to the terminal. Do not pry on the terminal with the special tool.

(e) Carefully withdraw the terminal from the connector by pulling the lead toward the rear of the connector.

NOTE: Do not use too much force. If the terminal does not come out easily, repeat steps (a) through (e).

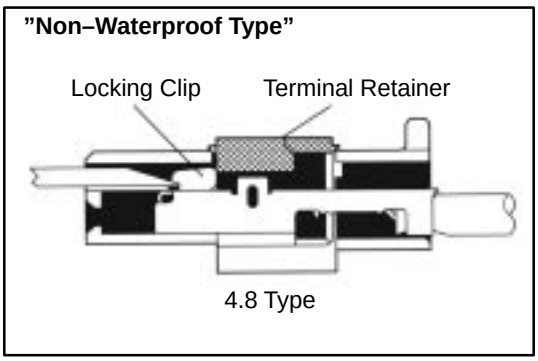

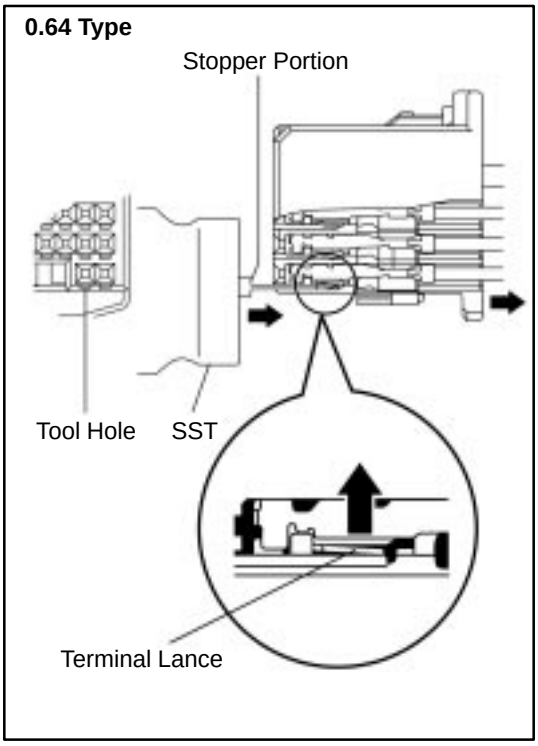

(f) Insert the SST into the connector in the direction shown in the chart.

(g) Insert the SST fully to the tool hole, and push the terminal lance.

NOTICE:

- **The terminal has a lance shape, therefore, the housing may be damaged and the terminal may get stuck if forcibly pried by wires etc.**
- **Insert the SST so that the stopper portion surface is facing up.**

(h) Carefully withdraw the terminal from the connector by pulling the lead toward the rear of the connector.

NOTICE:
Removal of the terminal from housing cavity will cause damage to the wire seal section, deteriorating waterproofing performance. Replace the connector with a new one.

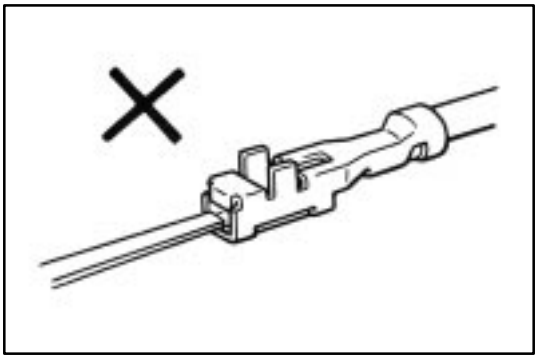

NOTICE:
Do not insert the special tool into the female terminal box. If you do so, replace the terminal with the new one whether the terminal is broken or not.

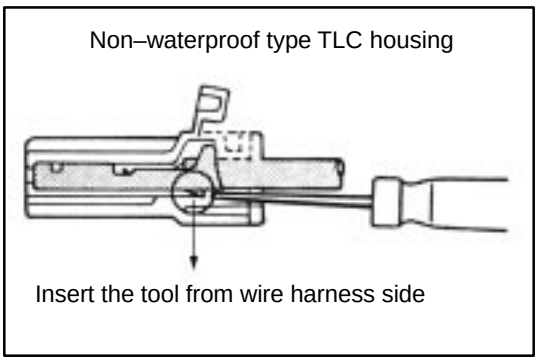

NOTICE:
As for Non–waterproof type TLC housing, insert the special tool into the housing from wire harness side.

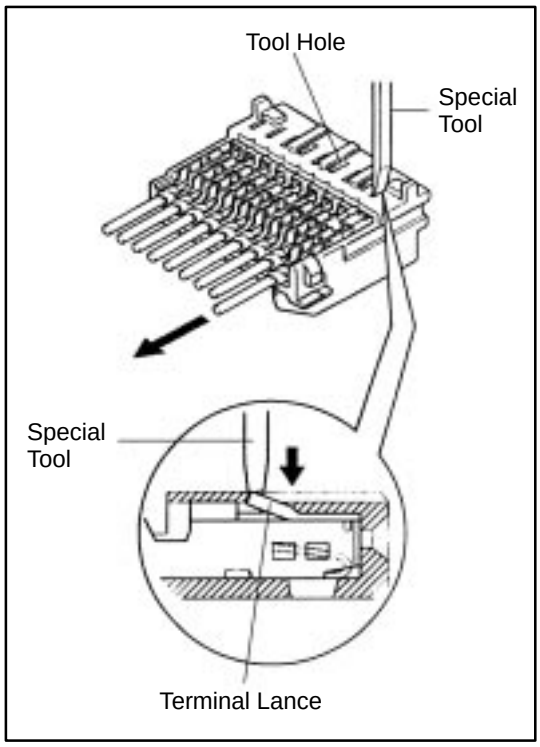

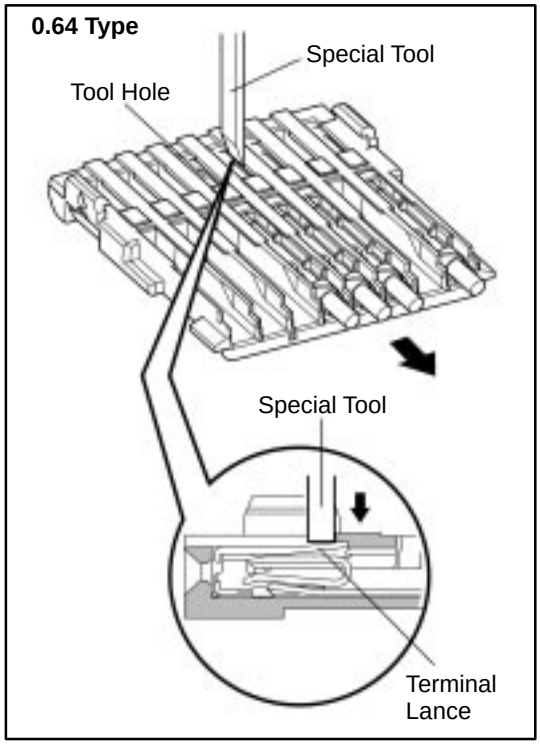

Insulation Displacement Connector Type

(a) Using a special tool, push the terminal lance from the tool hole.

(b) Carefully withdraw the terminal from the connector by pulling the lead toward the rear of the connector.

NOTICE:

- **Do not use too much force. If the terminal does not come out easily, repeat step (a).**
- **Always change the wire with the repair wire, in accordance with page B–27.**

Terminal Deformation

(1) Terminal Bending in Vertical Direction

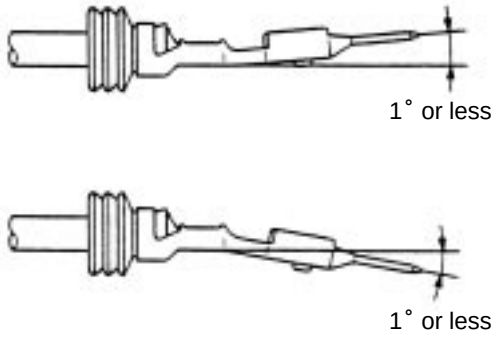

(2) Terminal Bending in Horizontal Direction

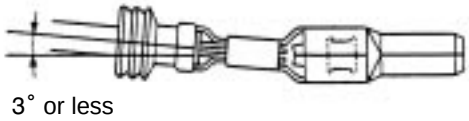

5. Inspect the terminal and the connector for damage.

NOTE:
- The locking clip is easily damaged.
- Do not reuse the damaged part.

Step 3. Replace the terminal.

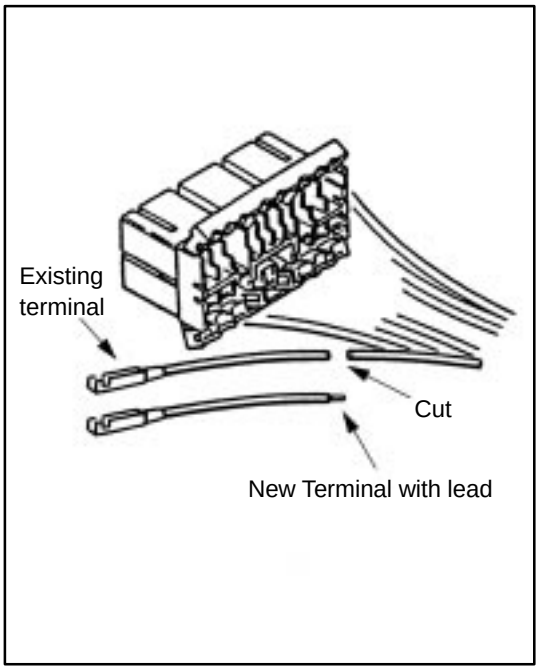

1. Cut the Old Terminal from the Harness.

(a) Use the new wire lead as a guide for proper length.

NOTE: If the length of wire removed is not approximately the same length as the new piece, the following problems may develop:

- Too short — tension on the terminal, splice, or the connector, causing and open circuit.
- Too long — excessive wire near the connector, may get pinched or abraded, causing a short circuit.

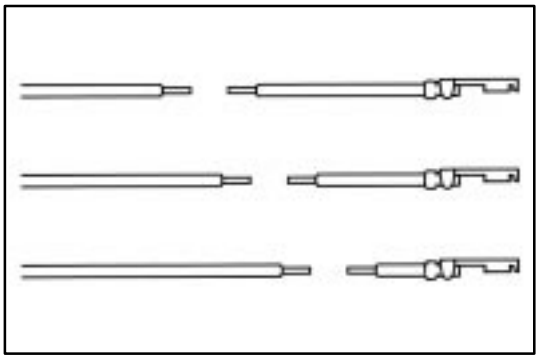

HINT: When connecting a wire harness at there or more spots to the same connector, cut the wire harness as shown on the left.

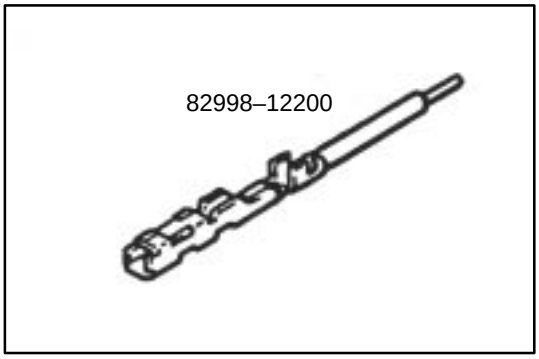

2. Select the correct replacement terminal with lead, from the supply parts.

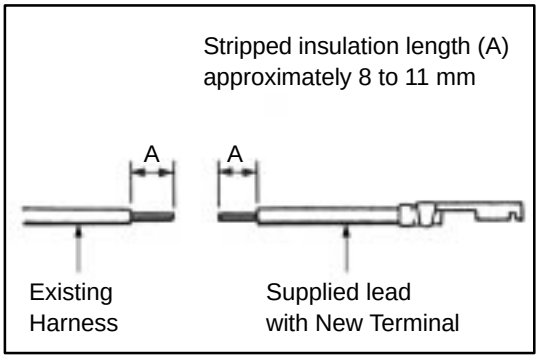

3. Strip insulation from wire on the harness and replacement terminal lead.

Start stripping at least 8 mm (0.31 in.) to 11 mm (0.43 in.) away from the end of the existing harness at vehicle side and also from the end of the repair wire.

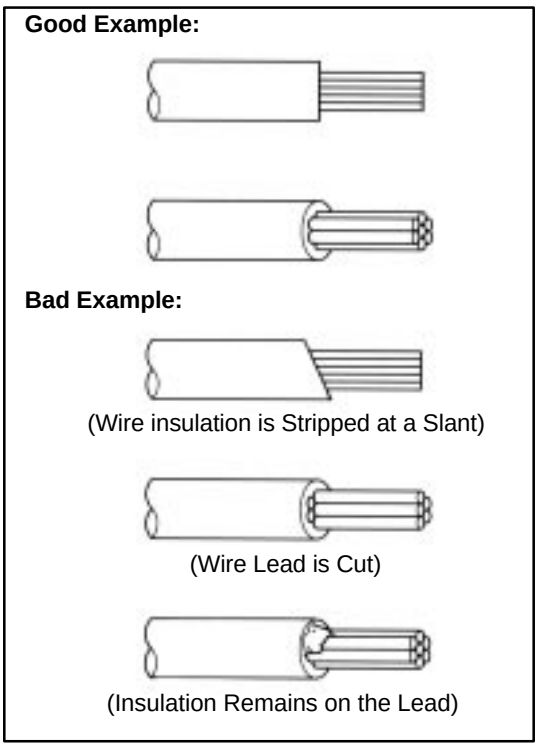

NOTICE:
Take care not to damage the wire when stripping the wire harness lead. After finishing the operation, visually inspect the wire. If there is any damage, perform the operation again.

HINT:
If the wire size is not known, start with largest stripper hole and work down until a clean strip of the insulation is removed without nicking or cutting the wire lead.

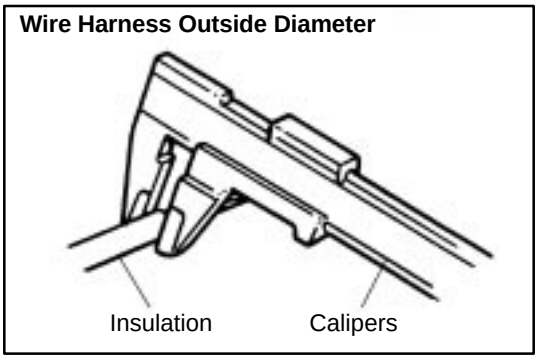

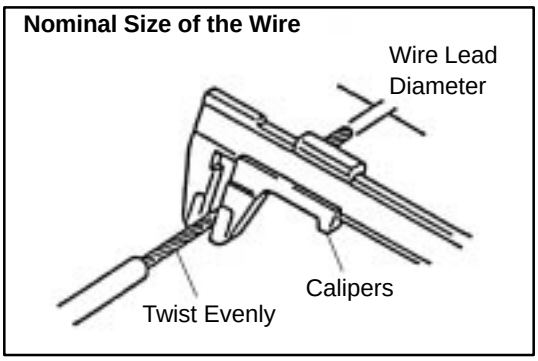

4. Select Correct Size of Sleeve from the Supply Parts.

(a) Measure the diameter of wire by using the measuring device as following:

- When size is based on the outside diameter of the wire harness

  Measure the outside diameter of the wire harness by placing a measuring device, such as a micrometer or Vernier Caliper, across the diameter of the insulation on the lead and taking a reading.

- When size is based on the nominal size of the wire lead.

  Measure the diameter of the wire lead by placing a measuring device, such as a micrometer or Vernier Caliper, across the diameter of the wire lead and taking a reading.

HINT:
To calculate the ”nominal size” of wire

$$\text{Nominal size} = \frac{3.14 \times (\text{Diameter of wire lead})^2}{4}$$

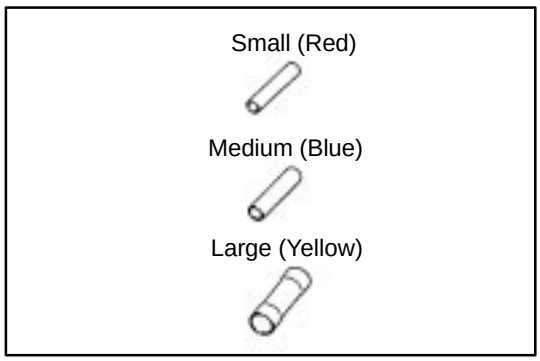

(b) Use the table to determine proper sleeve size

	Part Number	Nominal size of wire (Outside Diameter of wire)
Small	82999–12010	0.3 or less (1.0 – 0.2 mm)
Medium	82999–12020	0.5 – 1.25 (2.0 – 1.0 mm)
Large	82999–12030	2 or more (5.0 – 3.0 mm)

NOTE: For details, refer to sleeve size table on item 4 of STEP 1

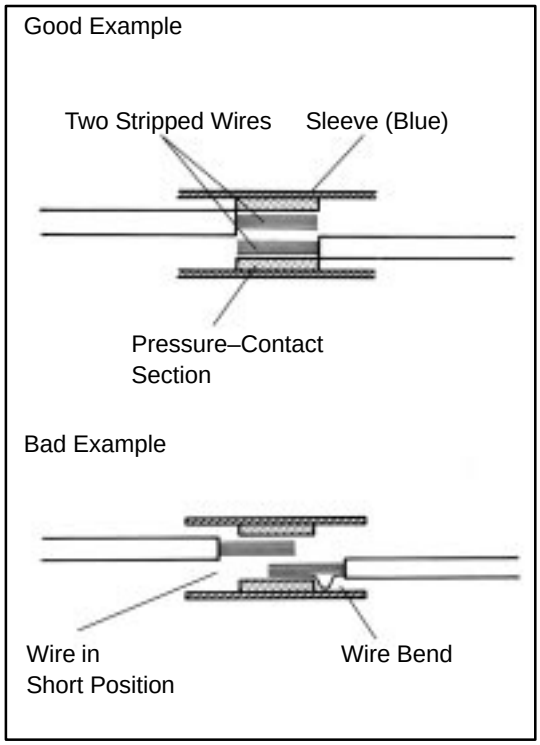

5. Crimp the Replacement Terminal Lead to the Harness Lead.

(a) Overlap the two stripped wire ends inside the sleeve as illustrated on the left.

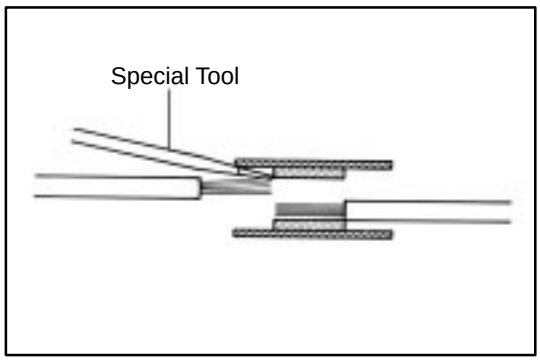

HINT: You might find it easier if you use a miniature special tool as a guide as you insert wires into the sleeve.

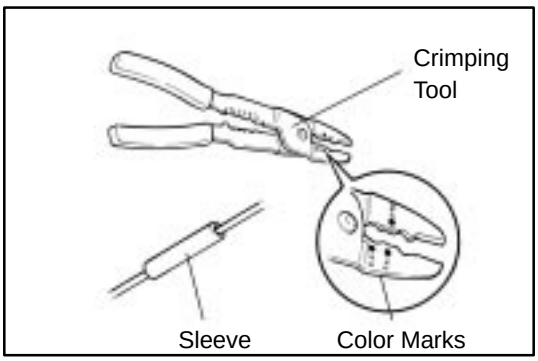

(b) The crimping tool (AMP Part No. 169060) has color marks on it. Place the sleeve in the correct section of the tool according to the color of the sleeve itself.

HINT: For the crimping tool, AMP ”Part No. 169060” is convenient to use.

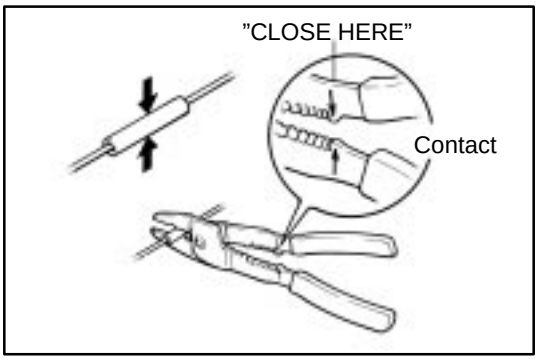

(c) With the center of the sleeve correctly placed between the crimping jaws, squeeze the crimping tool until either end comes into contact at the section marked by ”CLOSE HERE”.

HINT: Check to see that the sleeve and wires are still in the correct position before closing the crimping tool ends with steady pressure.

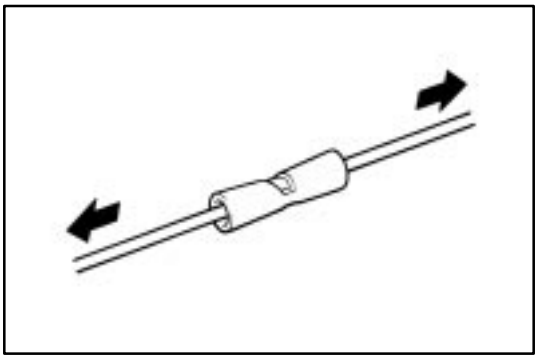

(d) Pull the joined wires to either end. Make sure that they are joined firmly by the sleeve.

NOTICE:
If the joined wires come loose the splice is defective, so replace the sleeve and repeat the procedure.

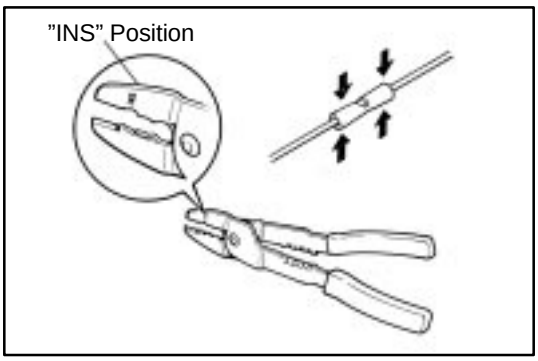

(e) Crimp both ends of the sleeve with the crimping tool at the ”INS” position.

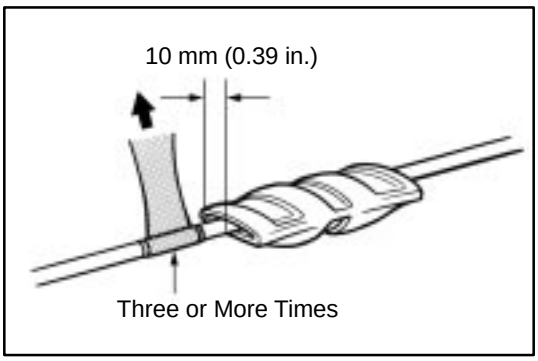

6. Protect Joined Section

Wrap silicon tape around the joins to protect them from moisture.

NOTE: This job is required in repairs of the engine compartment, under the floor and other moisture entry positions.

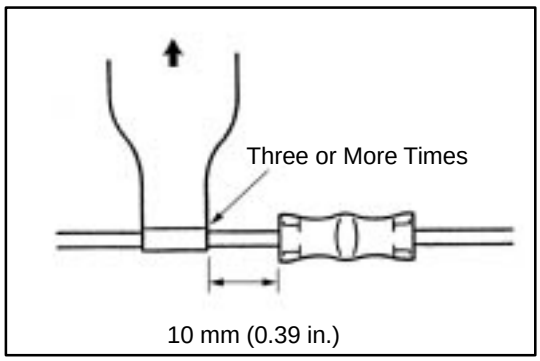

HINT:

- Before starting the operation, thoroughly wipe dirt and grease off the sections to be joined.
- If the adhesive surfaces of two tapes come in contact they will stick together and will not come apart, so do not remove the backing film except when using the tape.
- Do not let oil and dust, etc. get on the tape surface.

(a) Ready about 100 mm (3.94 in.) of silicon tape (Part No. 08231–00045) and peel off the film.

(b) Stretch the silicon tape until its width is reduced by half.

(c) About 10 mm (0.39 in.) from the end of the sleeve, wrap the silicon tape around the sleeve three or more times while stretching the tape.

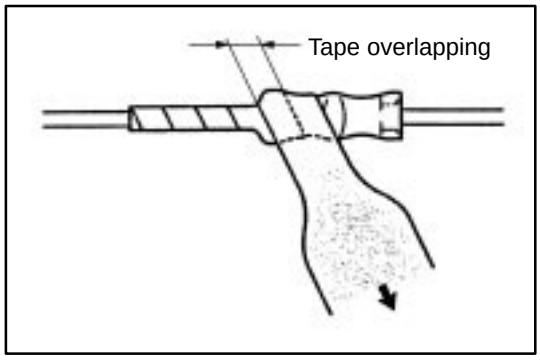

(d) Wrap the remaining part of the sleeve with half of the tape overlapping at each turn.

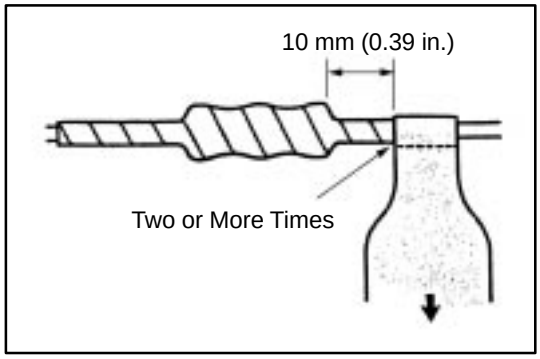

(e) Firmly wrap the tape two times or more about 10 mm (0.39 in.) from the other end of the sleeve, then wrap the tape back towards the start again and firmly finish winding the tape around the center of the sleeve.

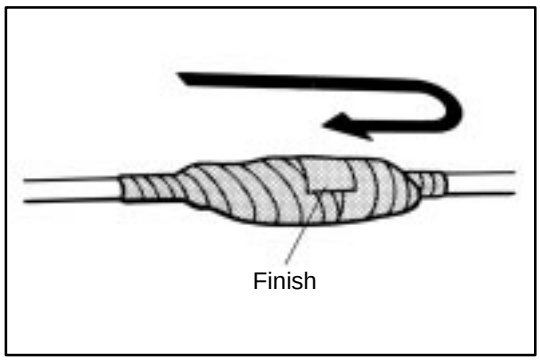

Step 4. Install the terminal into the connector.

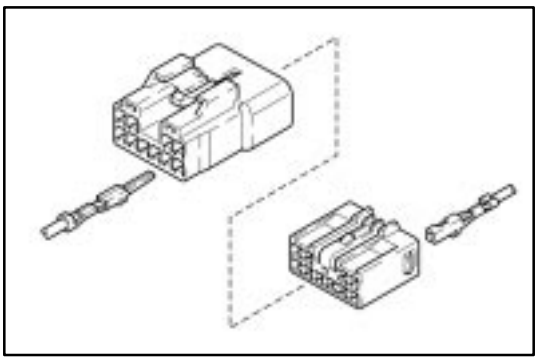

HINT:

(a) Make sure the terminal is positioned correctly.

(b) Insert the terminal until the locking clip locks firmly.

(c) Insert the terminal with terminal retainer in the temporary lock position, if equipped.

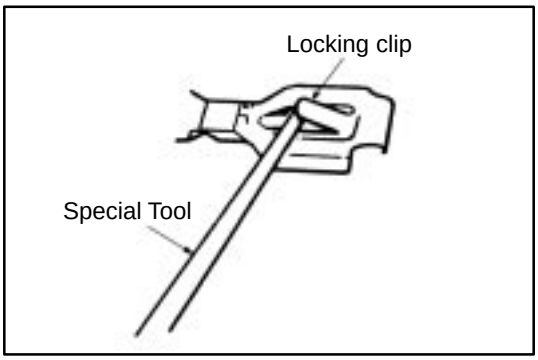

NOTE: If reusing a terminal, check that the locking clip is still in good condition and in the proper position.

(a) If it is on the terminal and not in the proper position, use the special tool to gently bend the locking clip back to the original shape.

(b) Check that the other parts of the terminal are in their original shape.

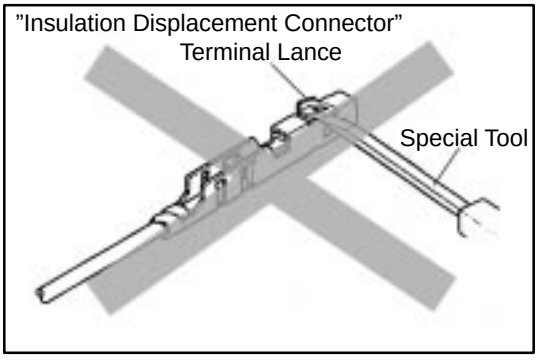

NOTICE:
Do not readjust or reuse the terminal lance of the insulation displacement connector type terminal. Always change the wire with the repair wire.

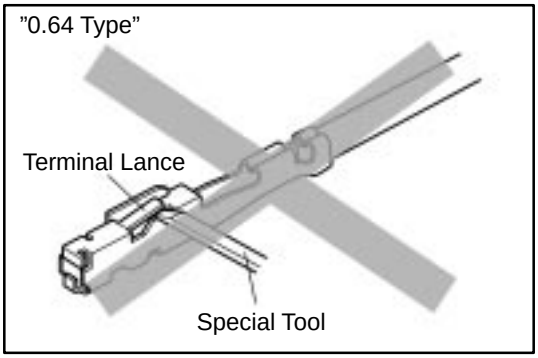

NOTICE:
As for 0.64 type terminal, do not adjust the terminal lance with the special tool.

Splash Proof Type Connector

NOTICE:

- **Removal of the terminal from housing cavity will cause damage to rubber plug material (the wire seal), deteriorating waterproofing performance. Be sure to replace the housing with a new one.**
- **Check the withdrawn terminal for the following if trying to use it again.**
  - **It is free of deformation and damage**
  - **It is free of adherents such as rubber plug material (wire seal)**
  - **Replace any deformed terminal.**

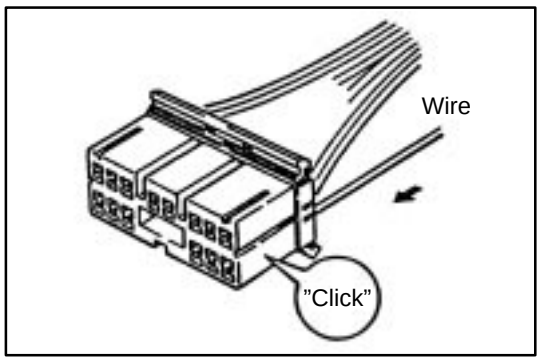

1. Push the Terminal into the Connector until you hear a ”click”.

NOTE: Not all terminals will give and audible ”click”.

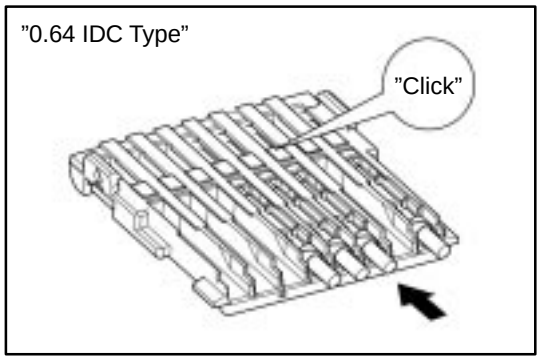

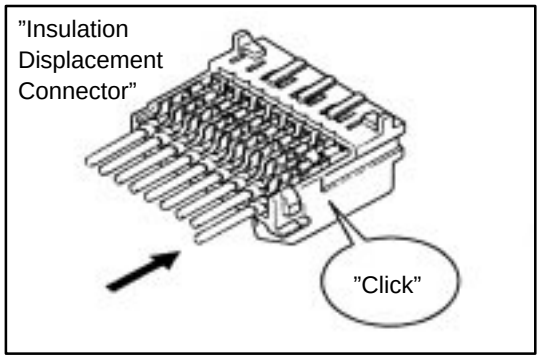

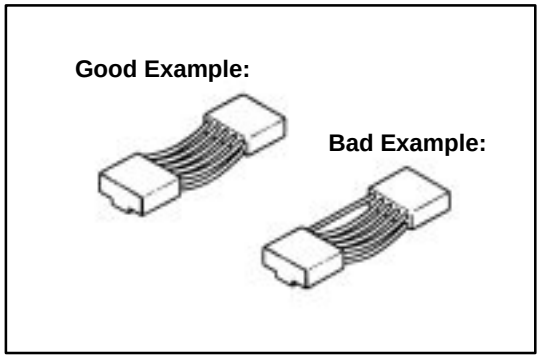

NOTICE:

- **After repairing, never let only one harness stretch.**
- **In cese that it becomes short, do over again using the repair wire.**

2. Double Locking Type Connector (with terminal retainer or double locking device)

The connector is fitted with a terminal retainer, or a double locking device, it is in the temporary lock position at insert the terminal.

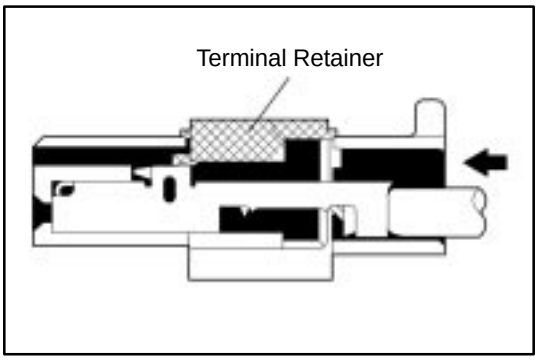

Type A (For 1.0, 1.0II, 1.3, 1.8, 2.3II 4.8 and 8.0 of Non–Waterproof Type Connector)

(a) Insert the terminal.

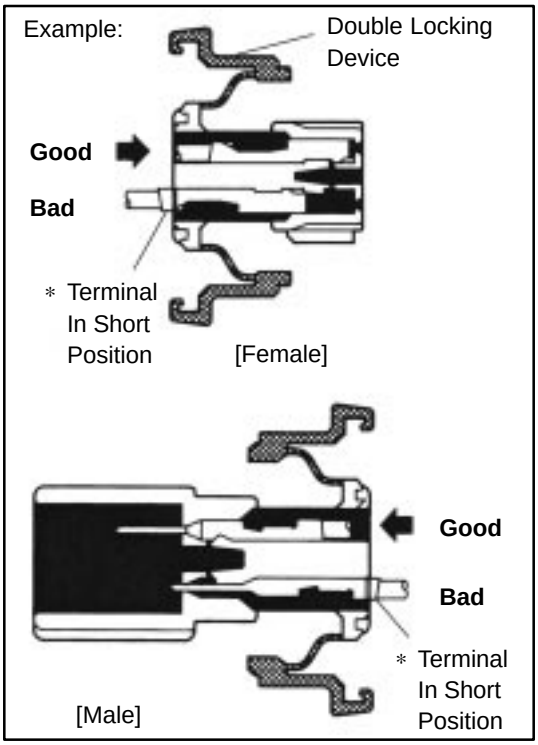

HINT:
1. Make sure the terminal is positioned correctly.
2. Insert the terminal with terminal retainer in the temporary lock position.

(b) Insert the terminal until the locking clip locks firmly.

HINT:
1. Pull the terminal back gently to check whether it is locked correctly.
2. If it cannot be inserted easily, check the terminal and the connector for damage.

NOTE: If the terminal to locking clip does not lock firmly, the double locking device cannot lock or terminal retainer does not lock at full lock position so the terminal backs out from connector.

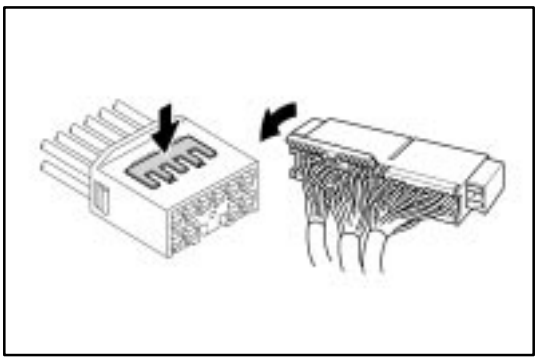

(c) Close terminal retainer or double locking device.

The connector is fitted with a terminal retainer, or a double locking device, return it to the full lock position.

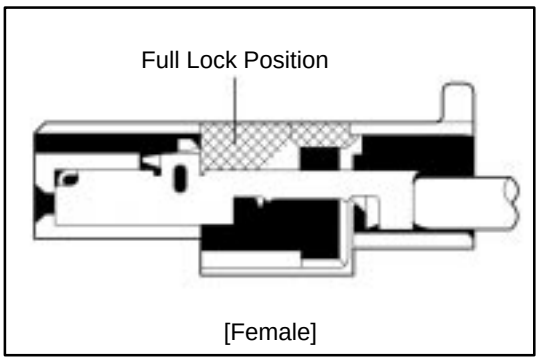

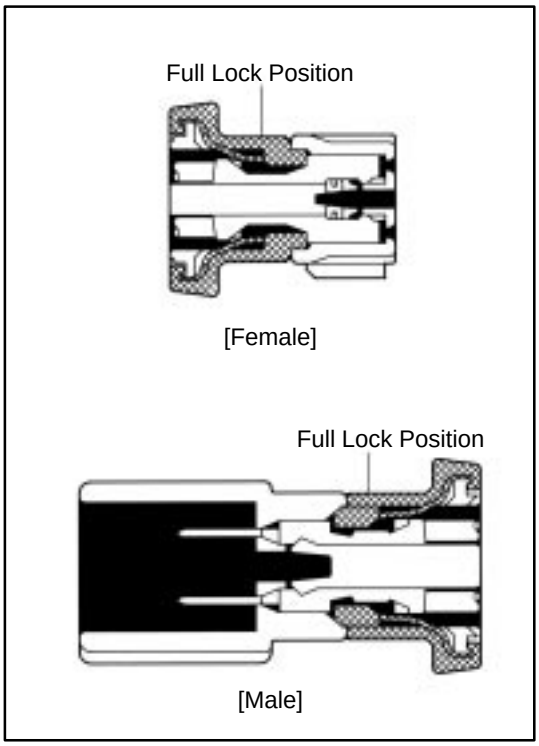

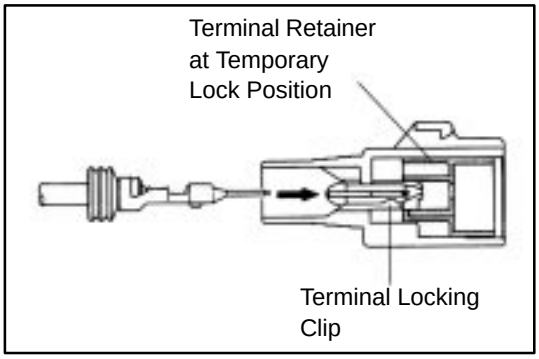

Type B (For 1.8, 2.3, 2.3II, 4.8, 6.3 and 8.0 of Waterproof Type)
(For Male Connector)

(a) Insert the terminal.

HINT:

1. Make sure the terminal is positioned correctly.
2. Insert the terminal with terminal retainer in the temporary lock position.

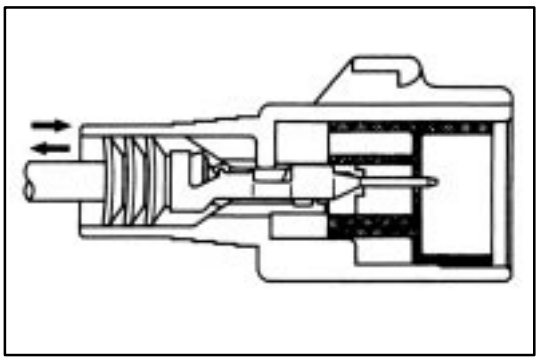

(b) Insert the terminal until the locking clip locks firmly.

HINT:

1. Pull the terminal back gently to check whether it is locked correctly.
2. If it cannot be inserted easily, check the terminal and the connector for damage.

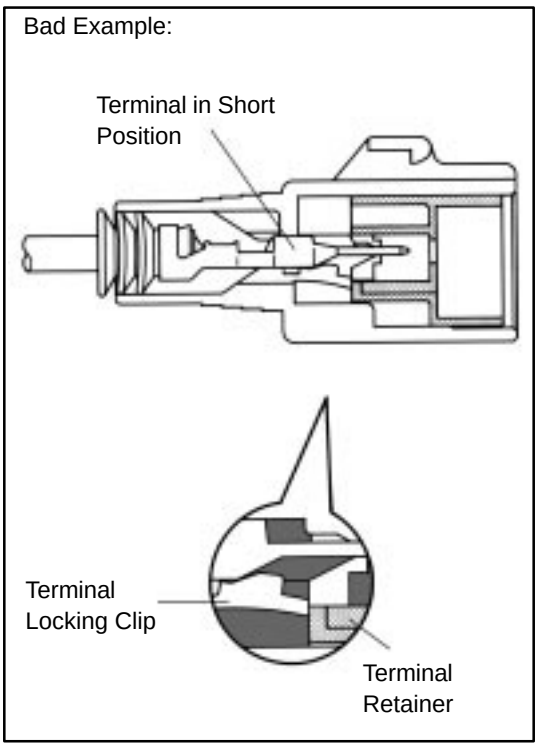

NOTE: If the terminal to locking clip does not lock firmly, terminal retainer can not lock at full lock position so the terminal backs out from connector.

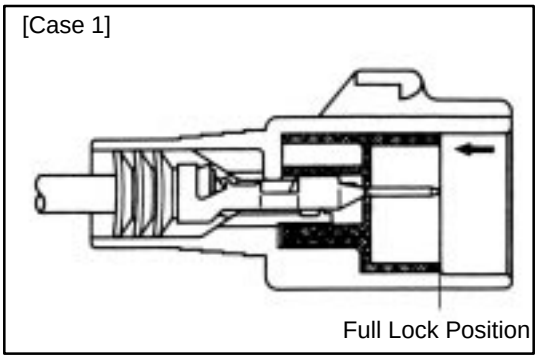

(c) ”For Case 1”
Push the terminal retainer in to the full lock position.

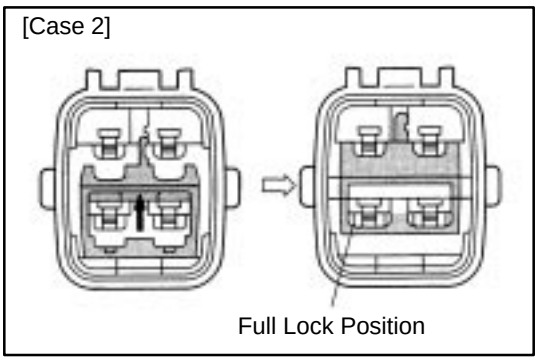

”For Case 2”
Raise the terminal retainer up to the full lock position.

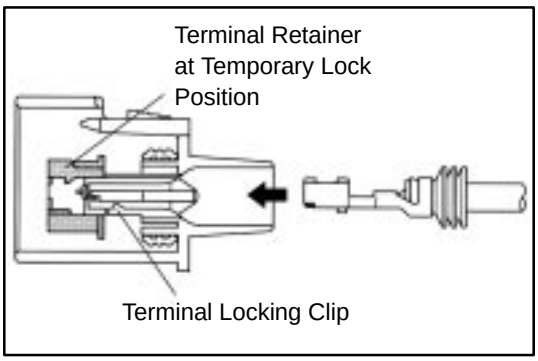

(For Female Connector)

(a) Insert the terminal.

HINT:

1. Make sure the terminal is positioned correctly.
2. Insert the terminal with terminal retainer in the temporary lock position.

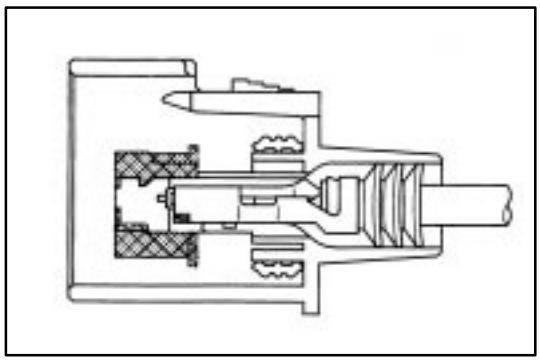

(b) Insert the terminal until the locking clip locks firmly.

HINT:

1. Pull the terminal back gently to check whether it is locked correctly.
2. If it cannot be inserted easily, check the terminal and the connector for damage.

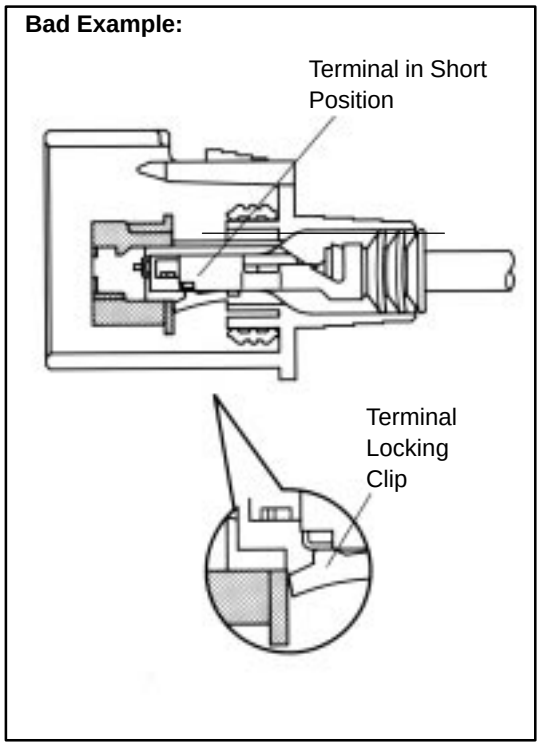

NOTE: If the terminal to locking clip does not lock firmly, terminal retainer can not lock at full lock position so the terminal backs out from connector.

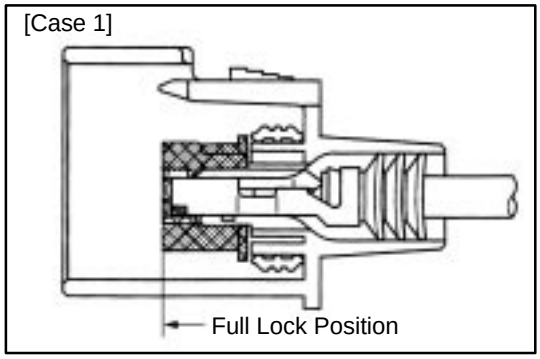

(c) ”For Case 1”
Push the terminal retainer in to the full lock position.

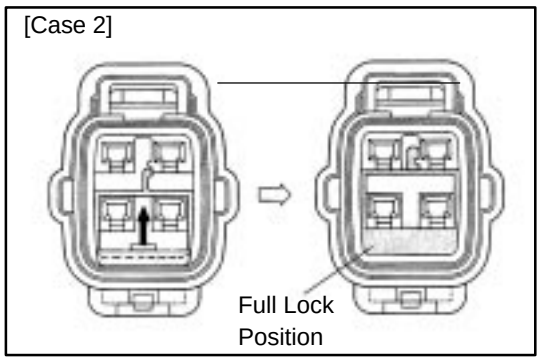

”For Case 2”
Raise the terminal retainer up to the full lock position.

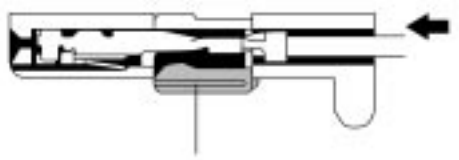

Type C (For 0.64 Type Connector)

(a) Insert the terminal.

HINT:
1. Make sure the terminal is positioned correctly.
2. Insert the terminal with terminal retainer in the temporary lock position.

(b) Insert the terminal until the terminal lance locks firmly.

HINT:
1. Pull the terminal back gently to check whether it is locked correctly.
2. If it cannot be inserted easily, check the terminal and the connector for damage.

NOTE: If the terminal to terminal lance does not lock firmly, the double locking device cannot lock or terminal retainer does not lock at full lock position so the terminal backs out from connector.

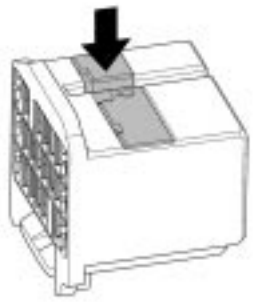

(c) Close terminal retainer.

The connector is fitted with a terminal retainer, return it to the full lock position.

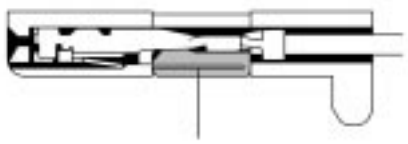

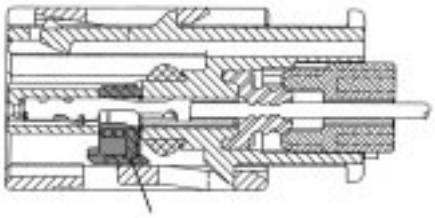

Type D (For 0.64 Splash Proof Type Connector)

(a) Verify that the terminal retainer is at unlocked position.

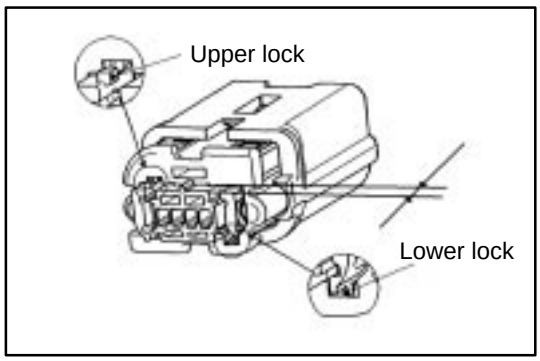

(b) Verify that Rear Holder is at unlocked position.

NOTICE:
If Rear holder or wire seal has been removed, replace it with new one.

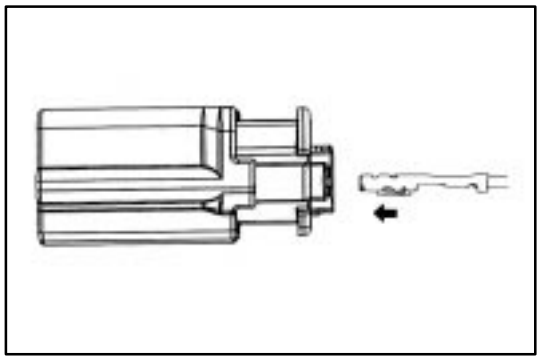

(c) Insert the terminal fully into the housing until it is locked.

HINT: The terminal has a longer insertion stroke than conventional ones.

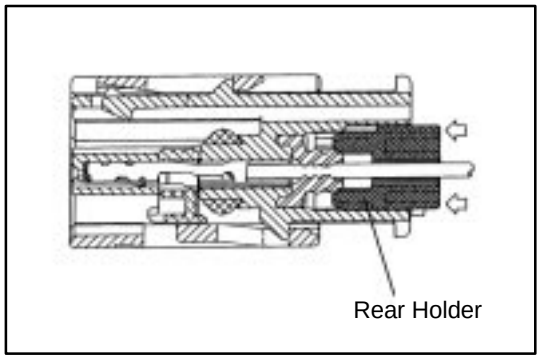

(d) Set Rear holder to locked position.
Push Rear holder in the direction of arrow until it is locked.

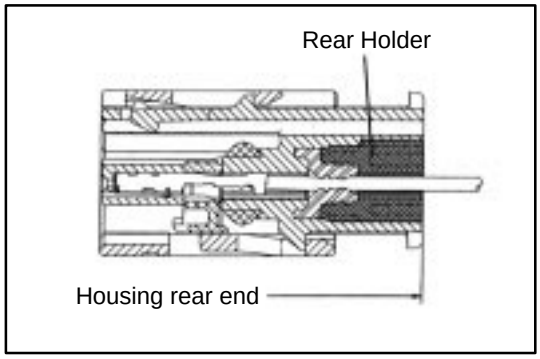

(e) Verify that Rear holder is at the specified position.
The rear end of Rear holder is flush with the rear end of Housing.

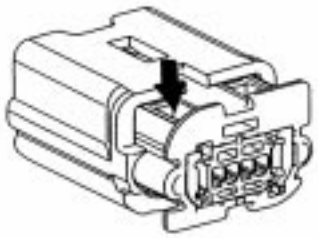

Lock check position, upper

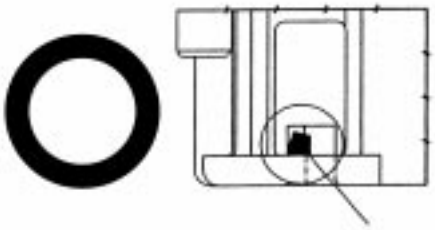

Lock normal engagement position

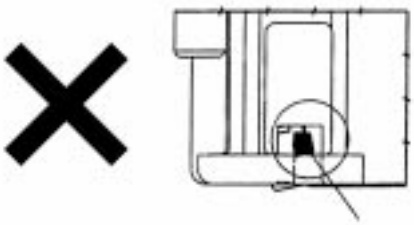

Incomplete lock engagement

Verify that the lock (upper side) is at the specified position under locked status.

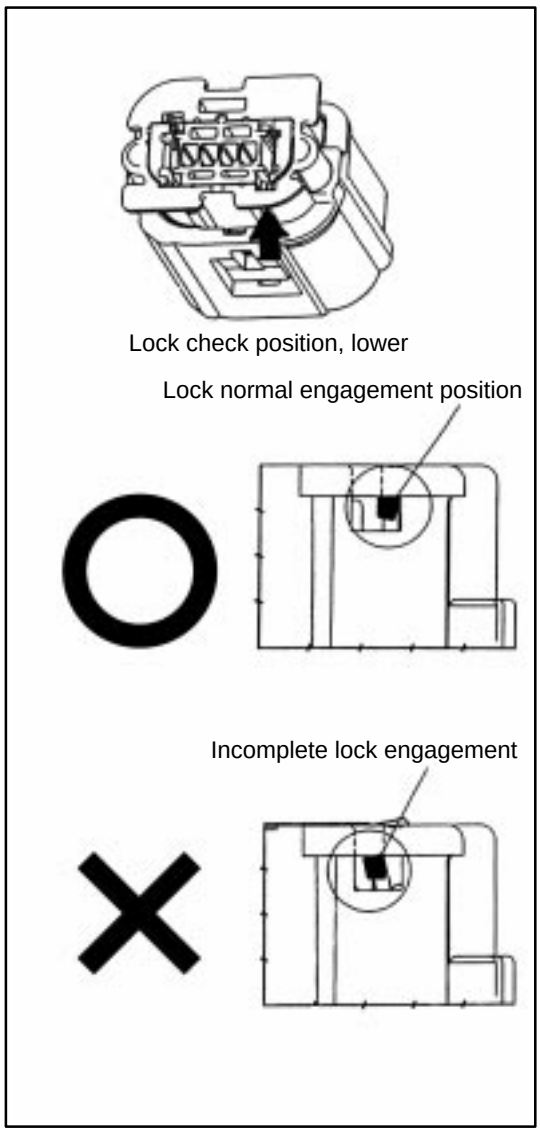

Verify that the lock (lower side) is at the specified position under the locked status.

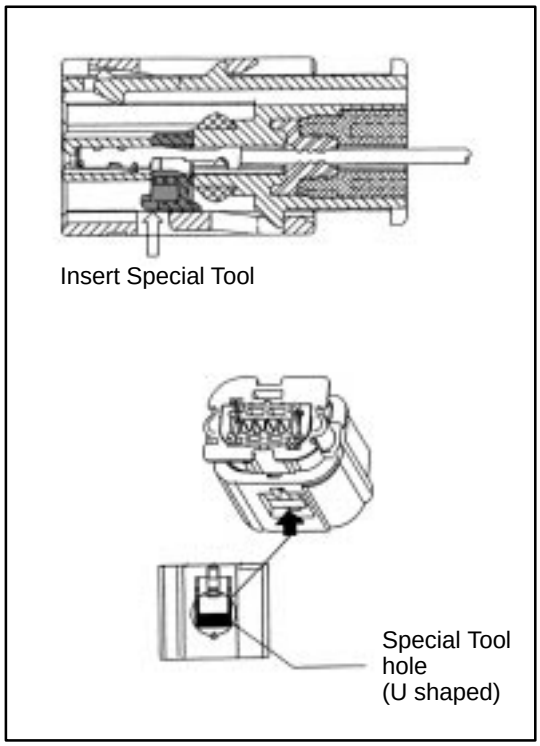

(f) Set Terminal retainer to Lock position.
Insert Special tool into the hole specified in the left and push Terminal retainer.

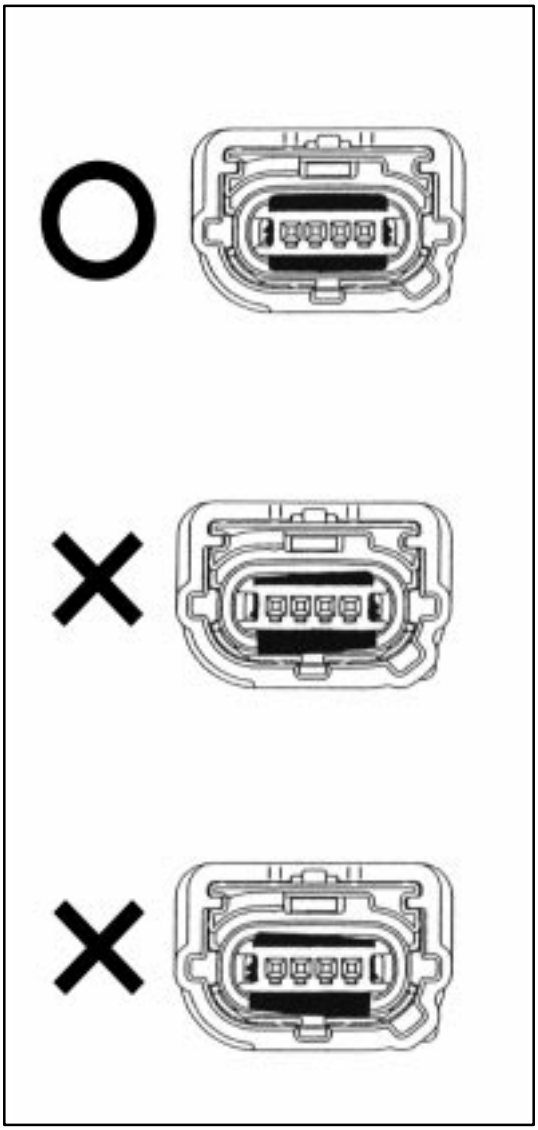

(g) Verify that Terminal retainer is inserted to the specified position.

NOTICE:
If Terminal retainer is stopped at its middle of insertion, holding wire, push Terminal to help it for full insertion.

SPECIAL EXAMPLE

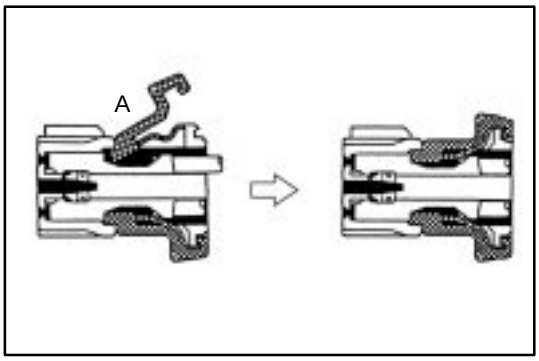

- First fit the section A.

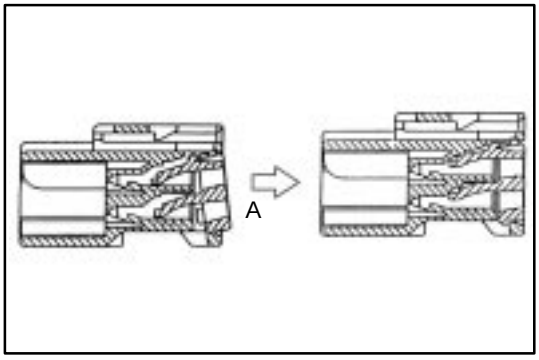

- Install the lock of the section A first.

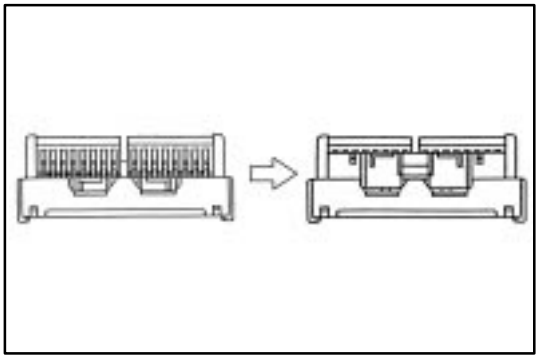

- Install the lock of the retainer and pull the white cover until you hear a click sound.

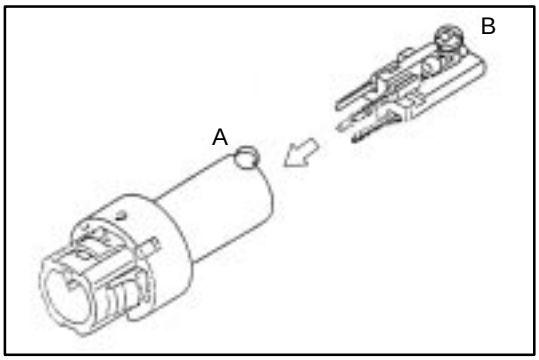

- Install the convex part (A) of the outer part correctly to the section B of the inner part.

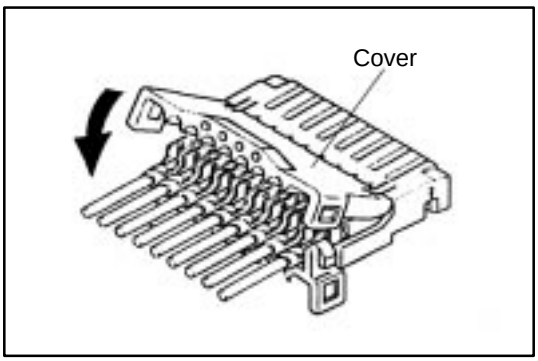

Insulation Displacement Connector

w/ Cover : CLOSE COVER

NOTICE:
Securely lock it

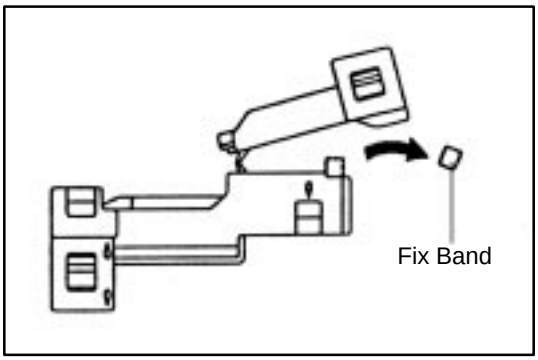

HINT:
When replacing it to a new connector, cut off the fixing band without leaving it.

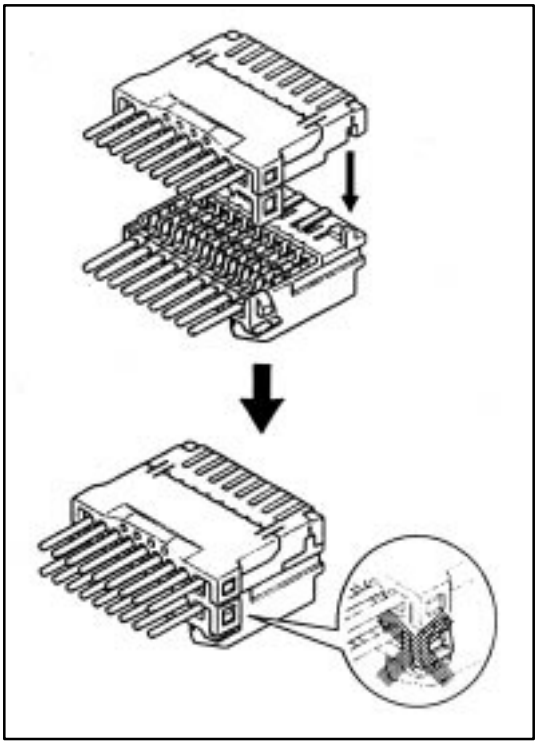

UNITE CONNECTOR

Make the projection of the front lock of the upper housing meet the ditch of the front lock of the lower housing and fix the rear lock.

NOTICE:

- **After uniting, securely lock it for not leaving the rear lock arm deformed.**
- **Make sure that the terminals will not become loose by pulling the wires lightly.**

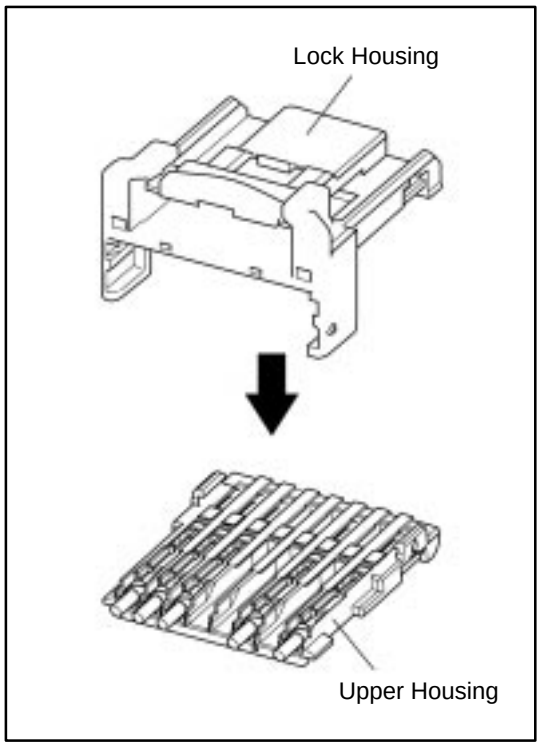

Insulation Displacement Connector (0.64 Type)

(a) Install the upper housing to the lock housing.

NOTICE:
- **Securely Lock it.**
- **Be careful not to mistake the upper housing and lower housing when putting together.**

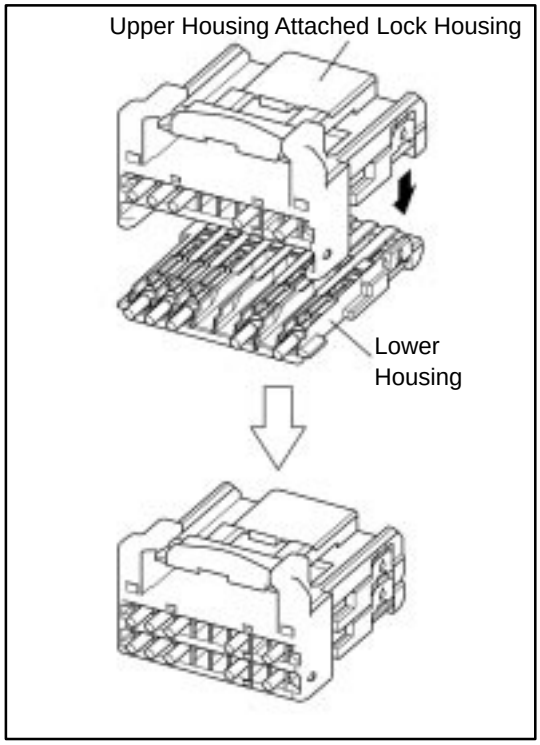

(b) Make the projection of the front lock of the upper housing attached lock housing meet the ditch of the front lock of the lower housing and fix the rear lock.

NOTICE:
- **Afteruniting, securely lock it for not leaving the rear lock arm deformed.**
- **Make sure that the terminals will not become loose by pulling the wires lightily.**
- **Be careful not to mistake the upper housing and lower housing when putting together.**

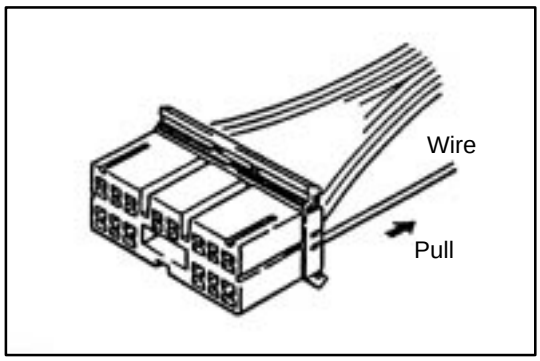

3. When properly installed, pulling gently on the wire lead will prove the terminal is locked in the connector.

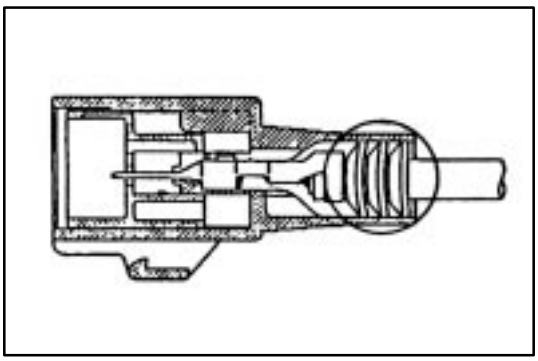

NOTICE:
If you working on the waterproof type, make sure that a rubber plug or a terminal gasket is inserted into the housing securely.

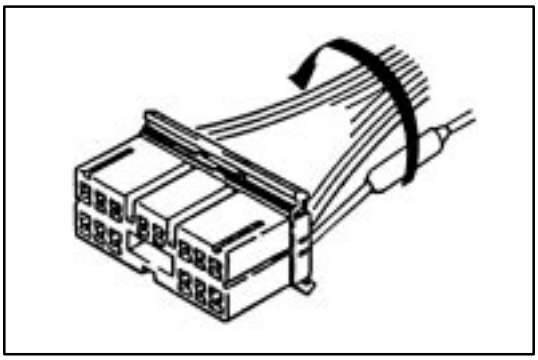

4. Secure the Repaired Wire to the Harness

If the wire is not in the conduit, or secured by other means, wrap vinyl tape around the bundle to keep it together with the other wires.

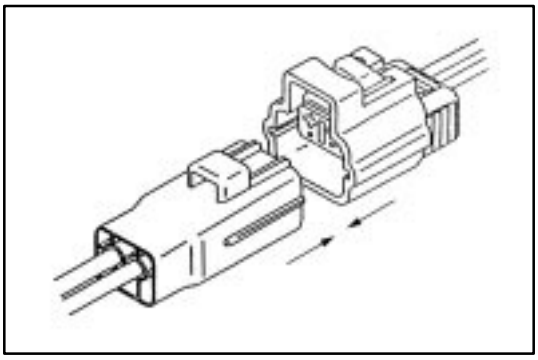

5. Connect Connector

- Fit the male connector to the female terminal.

NOTICE:
- **Do not twist the connector when fitting.**
- **Insert it until fully locked.**

HOW TO INSTALL AND REMOVE SPECIAL CONNECTORS

Low Fit and Lever Type Connector

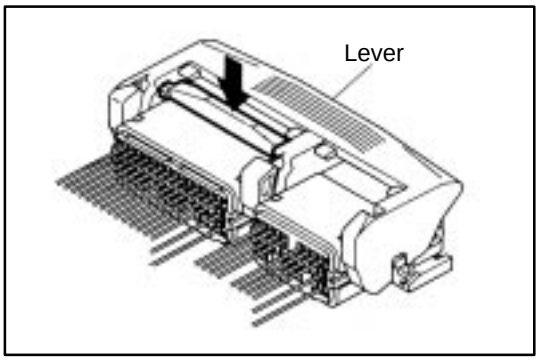

[Case 1]

1. Cut the connection of the connector

(1) Push the place indicated by the arrow.

(2) The lock is released and lever is lifted up.

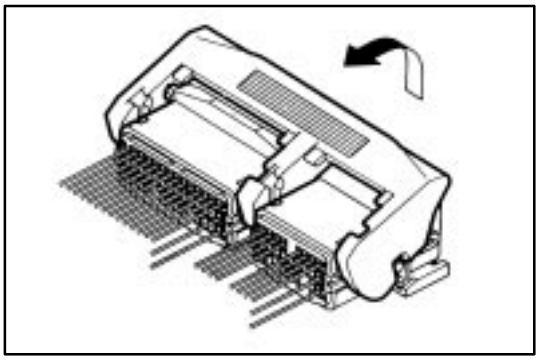

(3) Lift the lever up until it stops.

an

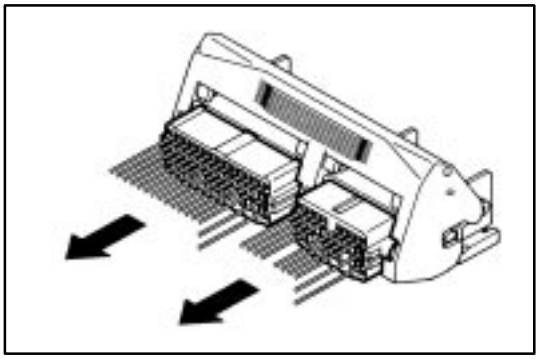

(4) Cut the connection of the connector.

NOTICE:
Do not hold the wire harness to pull it.

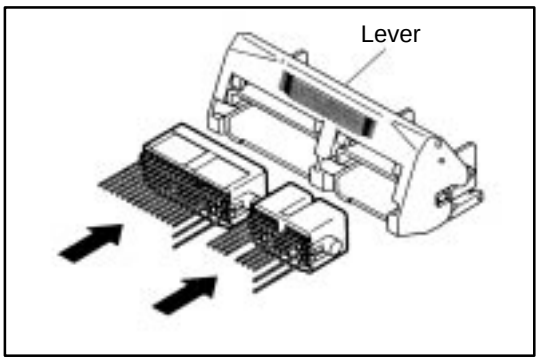

2. Connect the connector

(1) Connect the connector in the condition that the lever is fully lifted up.

HINT: If the lever is locked at the lower position, follow the procedure [Case 1]. (1) to (3) and lift the lever up fully.

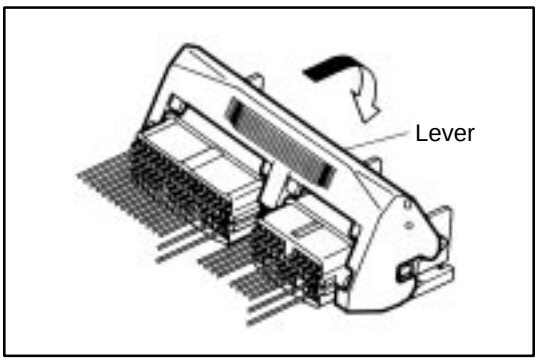

(2) Hold the connector to prevent it from slip off and push it down until you hear a click to lock it.

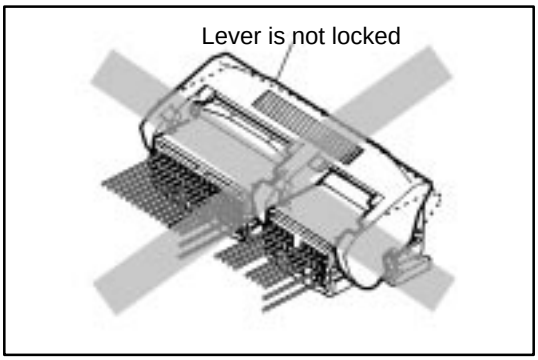

(3) Confirm that the lever is securely locked.

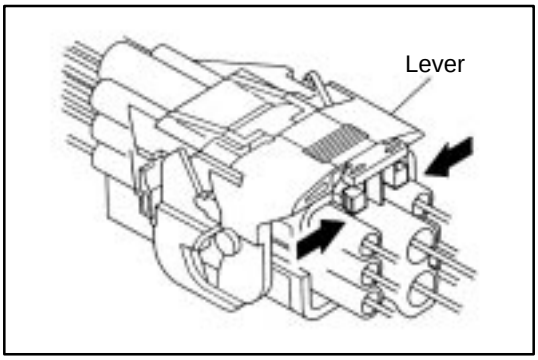

[Case 2]

1. Cut the connection of the connector

(1) Hold the area indicated by the arrow in the illustration

(2) The lock is released and the lever is lifted up.

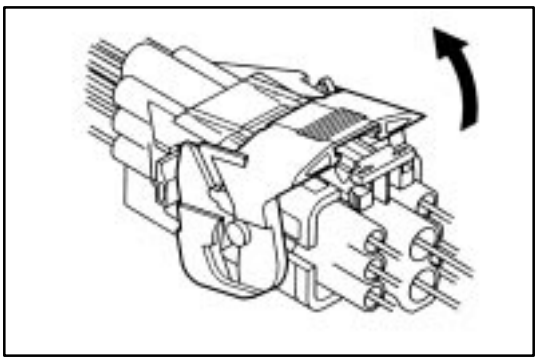

(3) Lift the lever up fully.

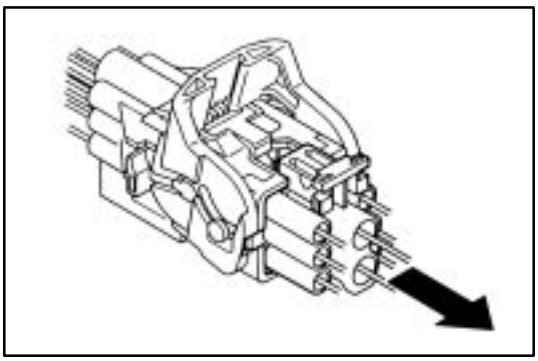

(4) Cut the connection of the connector.

NOTICE:
Do not hold the wire harness to pull it.

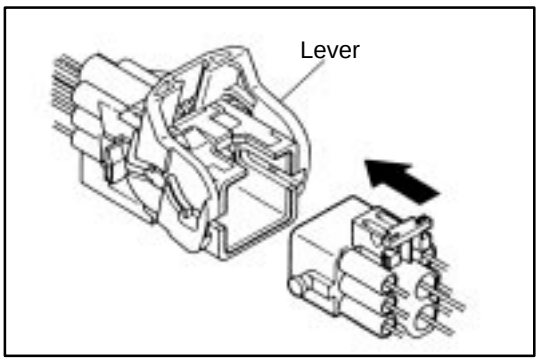

2. Connect the connector

(1) Connect the connector in the condition that the lever is fully lifted up.

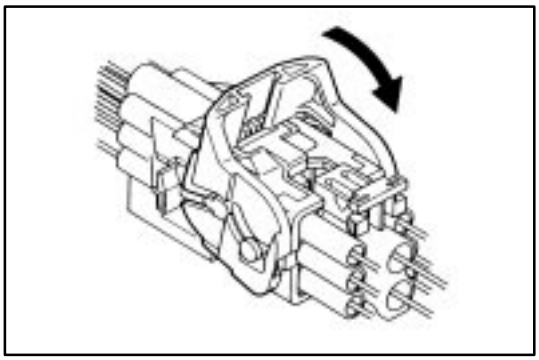

(2) Hold the connector to prevent it from slip off and push it down until you hear a click to lock it.

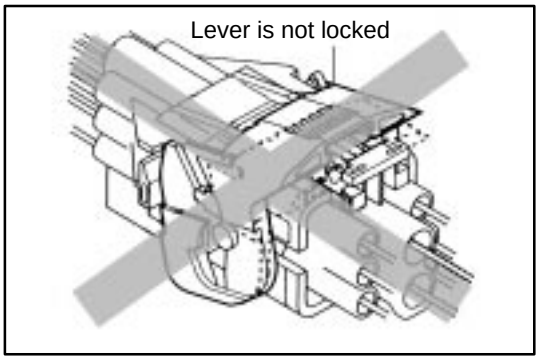

(3) Confirm that the lever is securely locked.

[Case 3]

1. Cut the connection of the connector

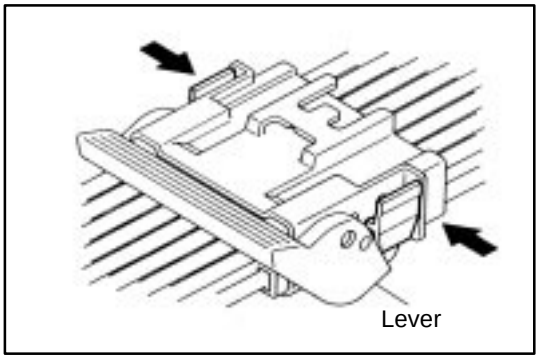

(1) Pick the part indicated in the illustration by fingers.

(2) The lock is released and the lever is lifted up.

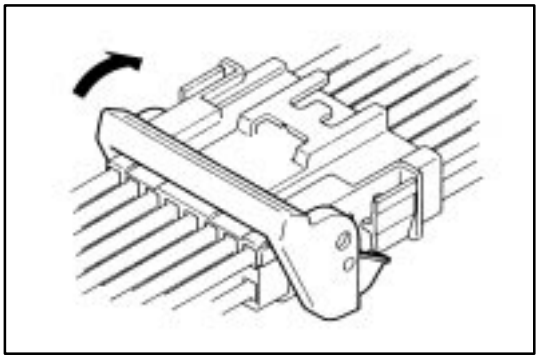

(3) Lift the lever up fully.

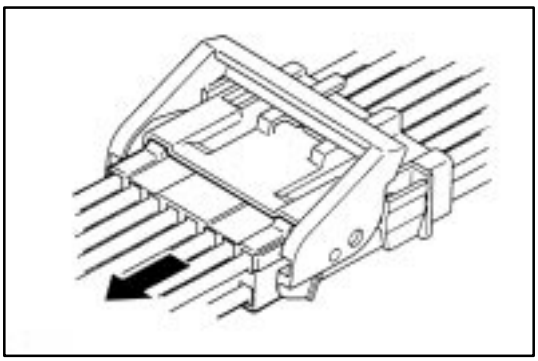

(4) Cut the connection of the connector.

NOTICE:
Do not hold the wire harness to pull it.

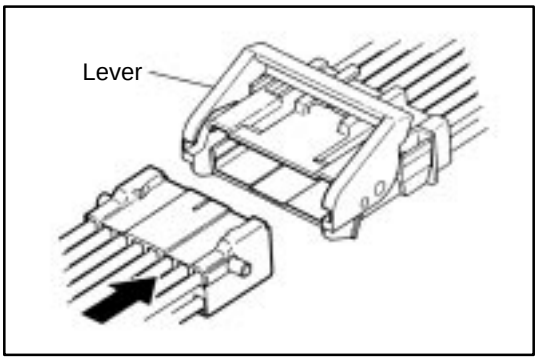

2. Connect the connector

(1) Connect the connector in the condition that the lever is fully lifted up.

HINT: If the lever is locked at the lower position, follow the procedure [Case 3]. (1) to (3) and lift the lever up fully.

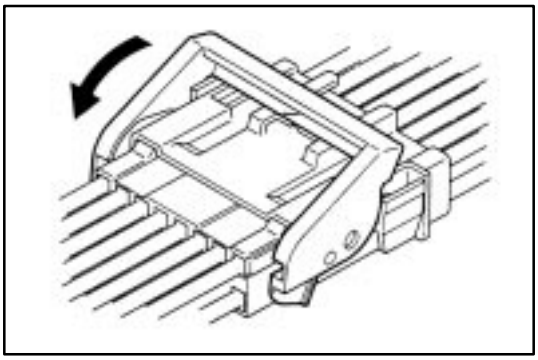

(2) Hold the connector to prevent it from slip off and push it down until you hear a click to lock it.

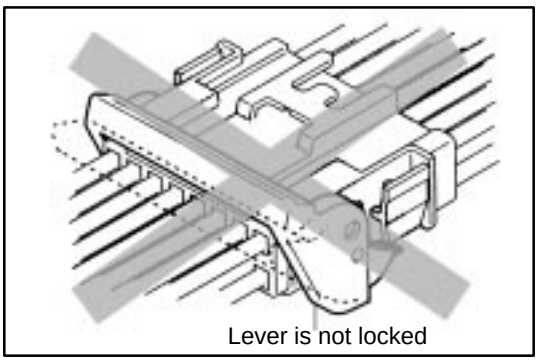

(3) Confirm that the lever is securely fitted

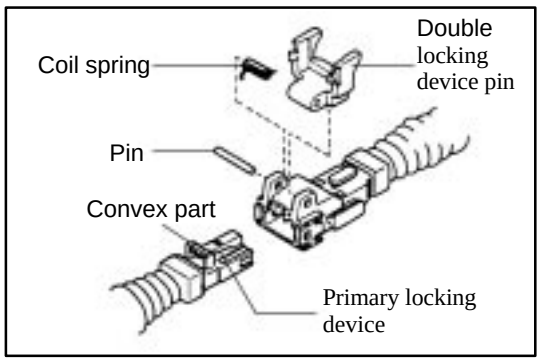

The connector with secondary locking device

1. Area used

- Wire harness for SRS airbag deployment

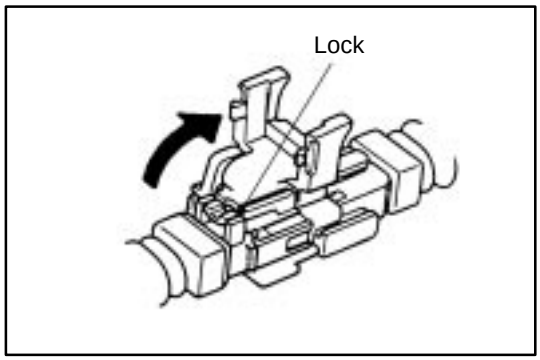

2. Cut the connection of the connector.

(1) Release the double locking.

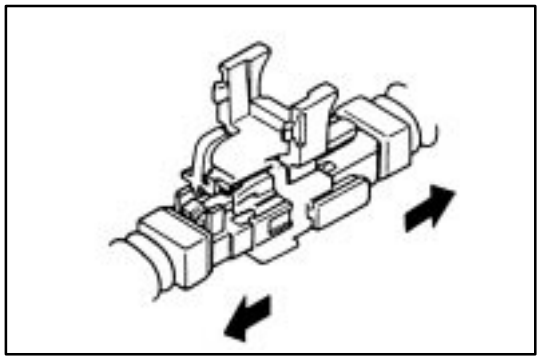

(2) Release the primary locking and separate the connector.

NOTICE:
Do not hold the wire harness to pull it.

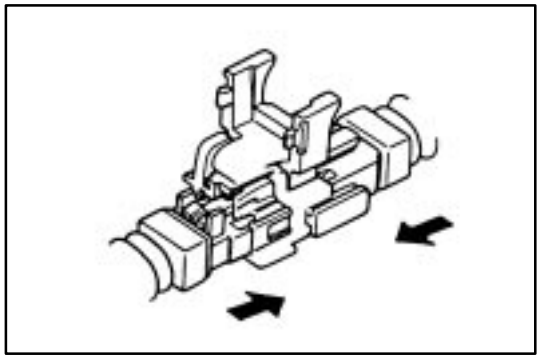

3. Connect the connector

(1) Install the primary locking device and connect the connector.

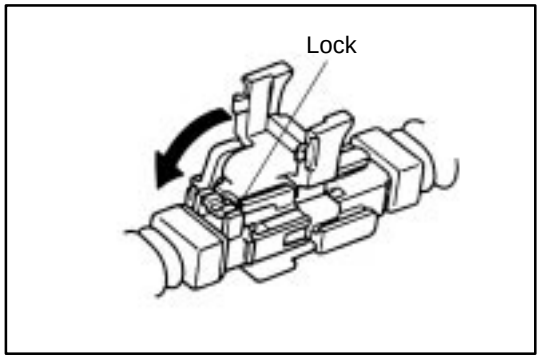

(2) Install the double locking device.

NOTICE:
The double locking device can not be installed unless the primary locking device is installed.

Connector fixed by bolts

1. Area used

- Engine control computer harness

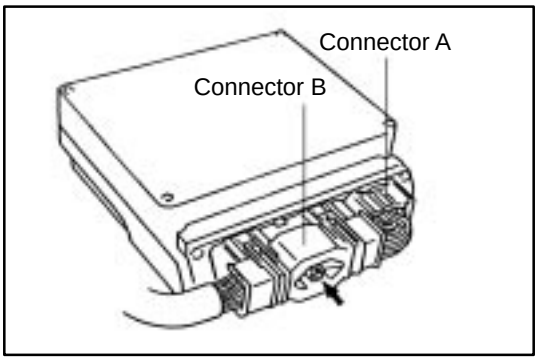

2. Cut the connection of the connector.

(1) Remove the connector A.

(2) Loose the bolt using a tool like driver until the connector B can be removed by hand and separate the connector.

HINT: If the bolt can not be removed, roll it while pulling forward.

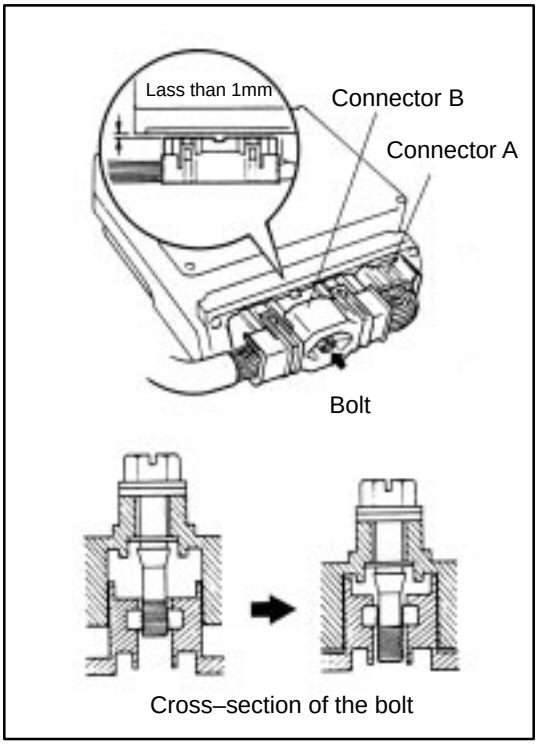

3. Connection of the connector

(1) Temporarily fit the connector B.

(2) Tighten the bolt by using tool like driver and fit the connector B completely.

NOTICE:

- **Tighten the bolt until feeling it lighter. Then confirm that the width of chink of the connector B is less than 1mm.**
- **The bolt can be rolled after it is fitted.**
- **If the impact wrench is used, do not let it rolling more than three seconds. (The housing may be deformed by generated heat)**
- **Be sure and connect the connector B straight. Do not incline it while connecting.**

(3) Connect the connector A.

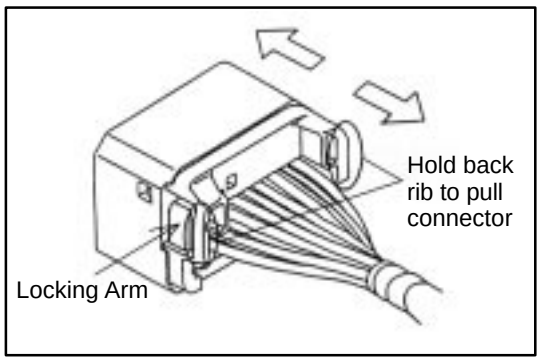

1. Cut the connection of the connector

(1) Push down on locking arm to unlock. Then hold the back ribs of connector to remove connector.

(2) Cut the Connection of the connector.

NOTICE:
Do not hold the wire harness to pull it.

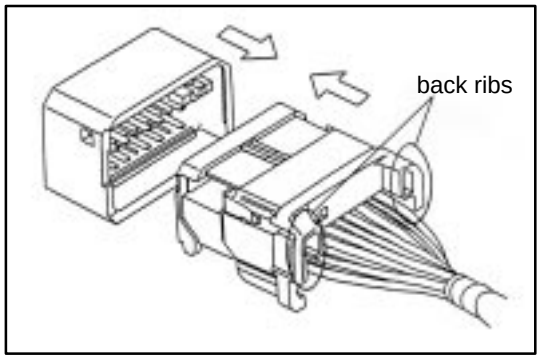

2. Connect the Connector

(1) Align the direction of locking feature in same direction and mate the connector holding the back ribs in straight direction.

(2) Insert it until a lock securely locks, and pull the connector lightly after the insertion, and confirm that a lock is enabled.

TABLE OF HOUSING CROSS SECTION

Type	○ : Position of the lance ↑ : Direction of lock released ⬆ : Direction of the special tool inserted	
	Male	Female
0.64		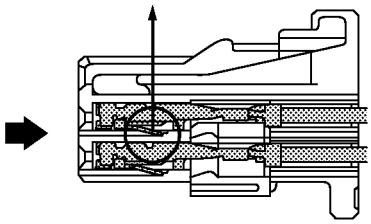 (Double Lock Type) [Terminal Lance]
0.64 IDC		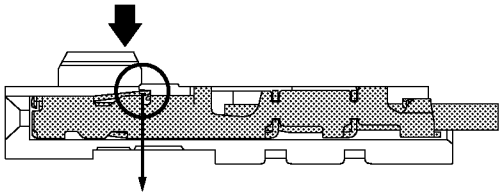 [Terminal Lance]
1.0		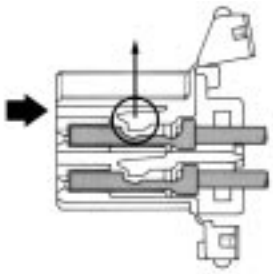 (Double Lock Type) [Housing Lance]
1.0II Non–waterproof Type	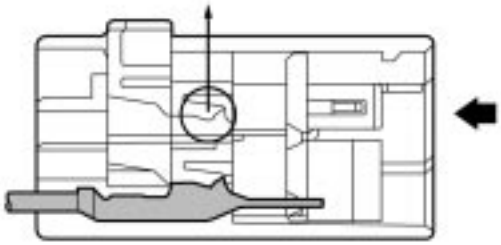 (Double Lock Type) [Housing Lance]	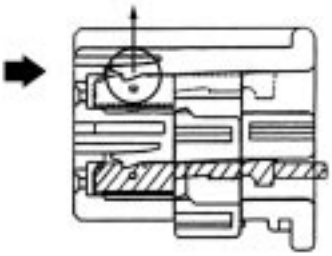 (Double Lock Type) [Housing Lance]

TABLE OF HOUSING CROSS SECTION

Type	○ : Position of the lance ↑ : Direction of lock released ⬆ : Direction of the special tool inserted	
	Male	Female
1.0II Waterproof Type		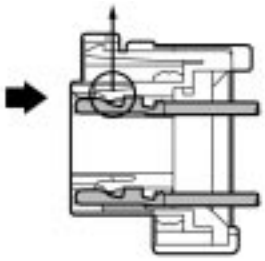 [Housing Lance]
1.0III 1.0IV Non–waterproof Type	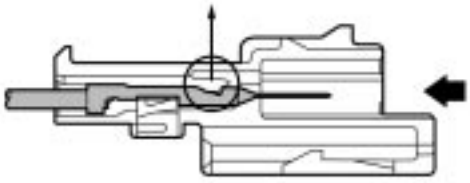 (Double Lock Type) [Housing Lance]	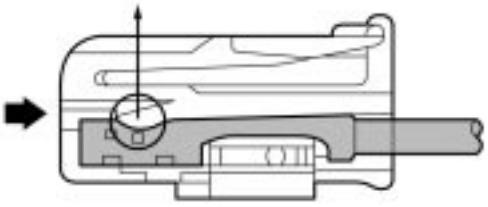 (Double Lock Type) [Housing Lance]
1.0III IDC	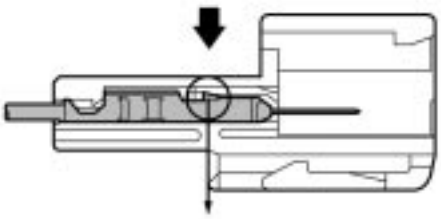 [Terminal Lance]	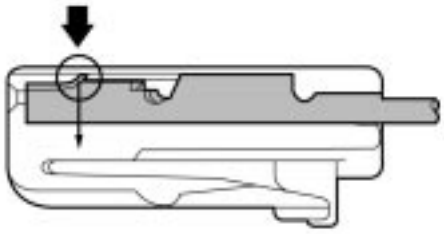 [Terminal Lance]
1.0III Waterproof Type	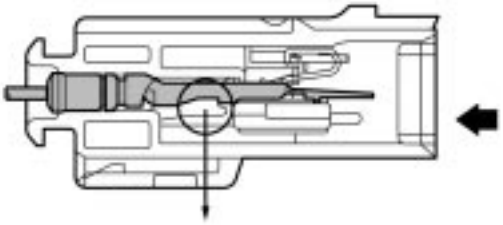 (Double Lock Type) [Housing Lance]	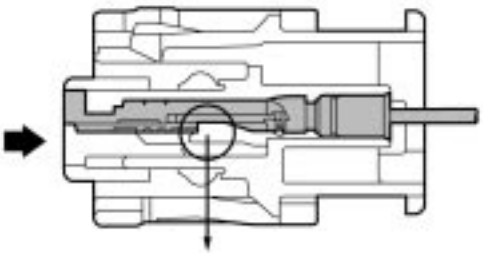 (Double Lock Type) [Housing Lance]

C

TABLE OF HOUSING CROSS SECTION

Type	○ : Position of the lance ↑ : Direction of lock released ⬆ : Direction of the special tool inserted	
	Male	Female
1.3 Non–waterproof Type	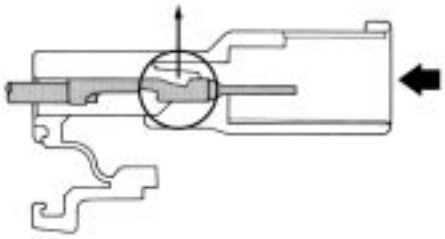 (Double Lock Type) [Housing Lance]	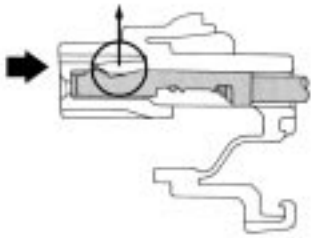 (Double Lock Type) [Housing Lance]
1.3 Non–waterproof Type	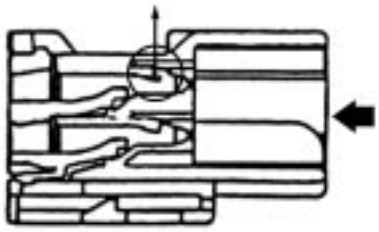 (Double Lock Type) [Housing Lance]	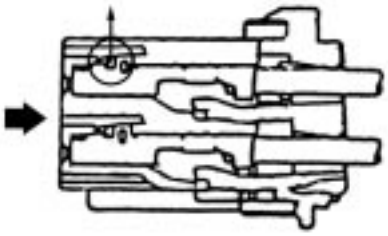 (Double Lock Type) [Housing Lance]
1.3 Non–waterproof Type	—	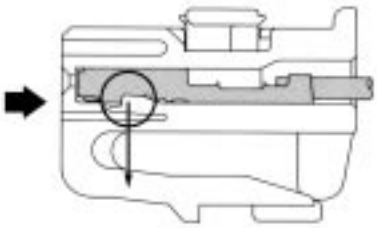 (Double Lock Type) [Housing Lance]
1.3 Waterproof Type	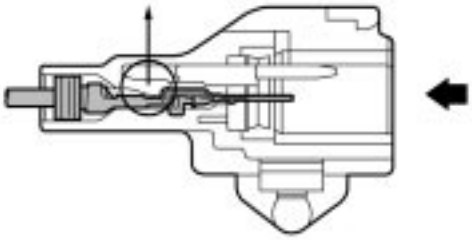 (Double Lock Type) [Housing Lance]	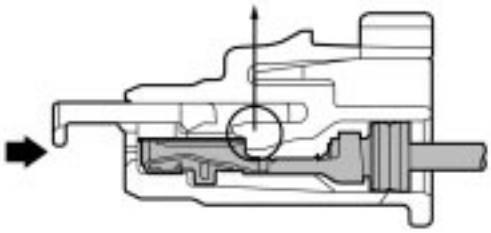 (Double Lock Type) [Housing Lance]

TABLE OF HOUSING CROSS SECTION

Type	○ : Position of the lance ↑ : Direction of lock released ⬆ : Direction of the special tool inserted	
	Male	Female
1.8 Non–waterproof Type	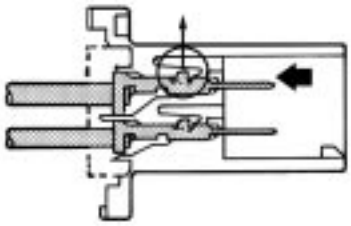 (Double Lock Type) [Housing Lance]	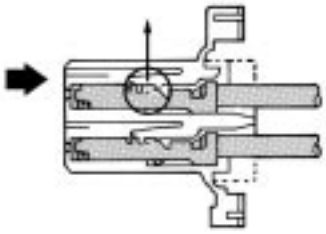 (Double Lock Type) [Housing Lance]
1.8 Waterproof Type		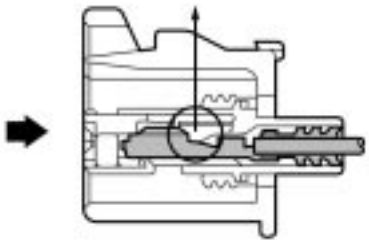 (Double Lock Type) [Housing Lance]
1.8II	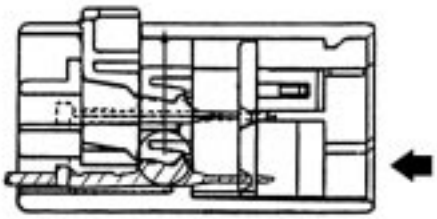 (Double Lock Type) [Housing Lance]	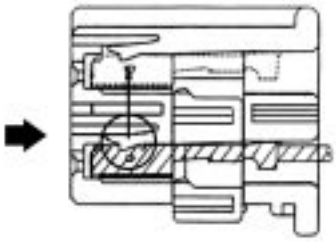 (Double Lock Type) [Housing Lance]
2.3 Non–waterproof Type	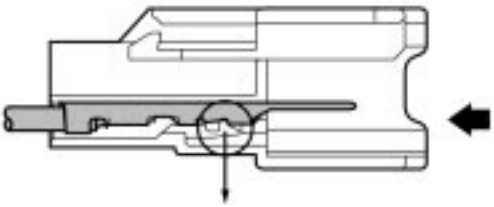 [Housing Lance]	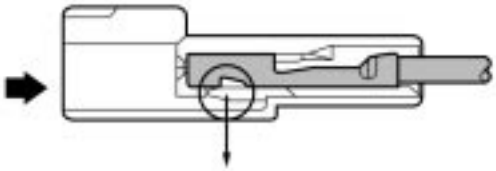 [Housing Lance]

C

TABLE OF HOUSING CROSS SECTION

Type	○ : Position of the lance ↑ : Direction of lock released ⬆ : Direction of the special tool inserted	
	Male	Female
2.3 Waterproof Type	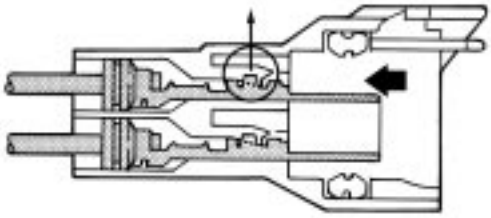 [Housing Lance]	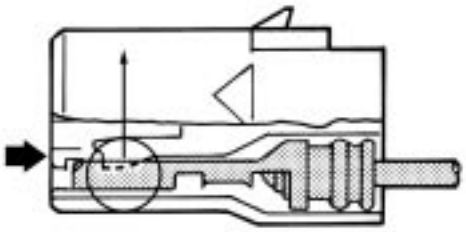 [Housing Lance]
2.3II Non–waterproof Type	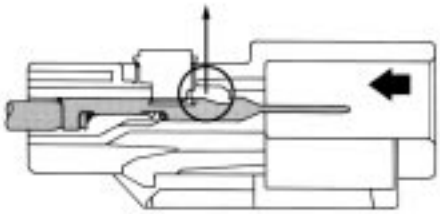 (Double Lock Type) [Housing Lance]	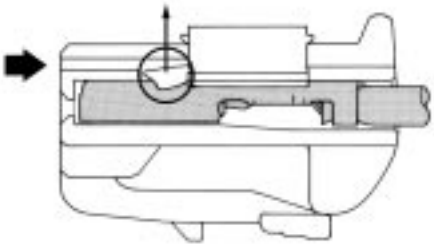 (Double Lock Type) [Housing Lance]
2.3II IDC	—	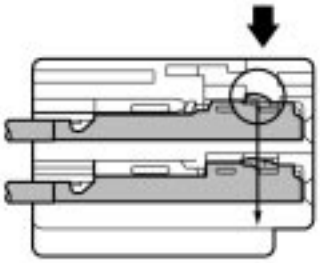 [Terminal Lance]
2.3II Waterproof Type	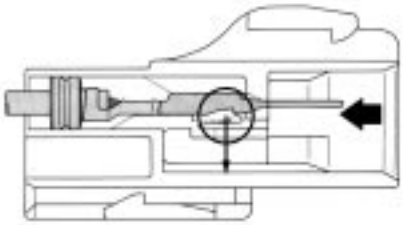 (Double Lock Type) [Housing Lance]	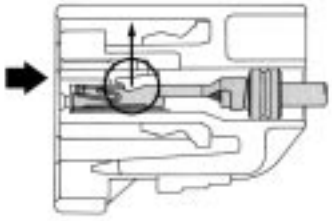 (Double Lock Type) [Housing Lance]

TABLE OF HOUSING CROSS SECTION

Type	○ : Position of the lance ↑ : Direction of lock released ⬆ : Direction of the special tool inserted	
	Male	Female
4.8 Non–waterproof Type	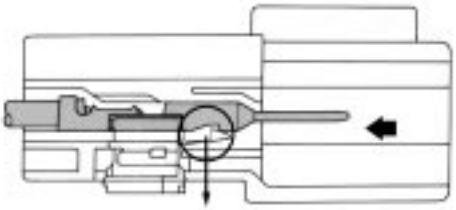 (Double Lock Type) [Housing Lance]	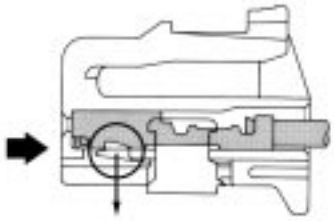 (Double Lock Type) [Housing Lance]
4.8 Waterproof Type	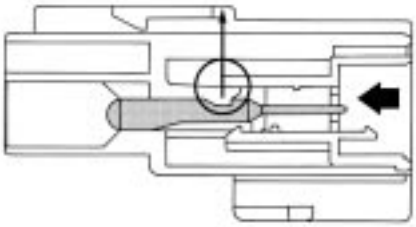 (Double Lock Type) [Housing Lance]	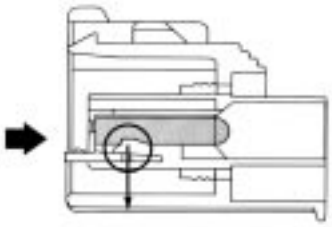 (Double Lock Type) [Housing Lance]
6.3 Non–waterproof Type	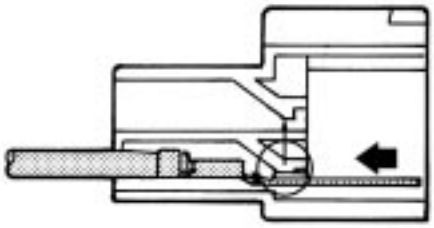 [Housing Lance]	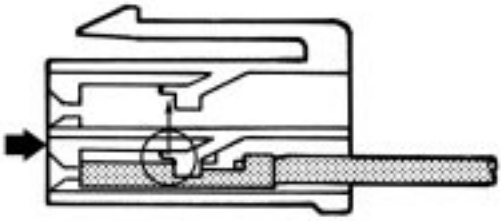 [Housing Lance]
6.3 Single Terminal	—	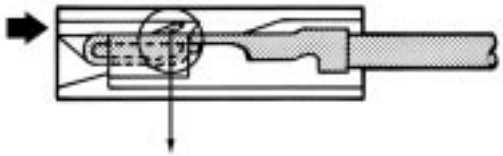 [Terminal Lance]

TABLE OF HOUSING CROSS SECTION

Type	○ : Position of the lance ↑ : Direction of lock released ⬆ : Direction of the special tool inserted	
	Male	Female
8.0 Non–waterproof Type	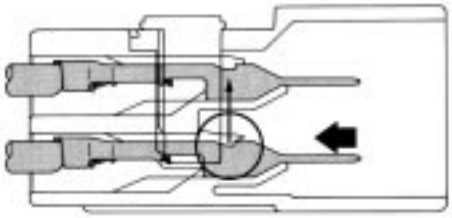 (Double Lock Type) [Housing Lance]	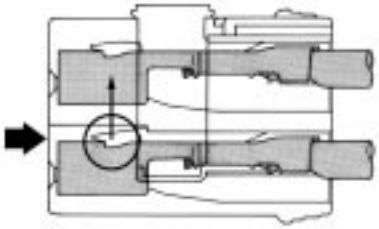 (Double Lock Type) [Housing Lance]
8.0 Waterproof Type	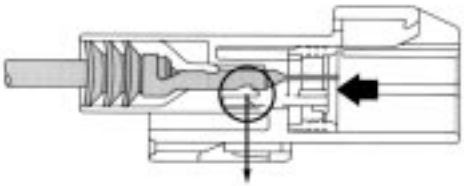 (Double Lock Type) [Housing Lance]	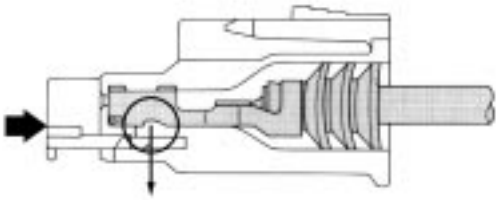 (Double Lock Type) [Housing Lance]
BLADE FUSE	—	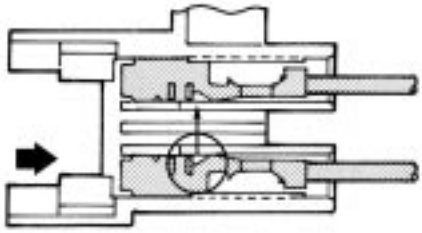 [Housing Lance]
C–Type	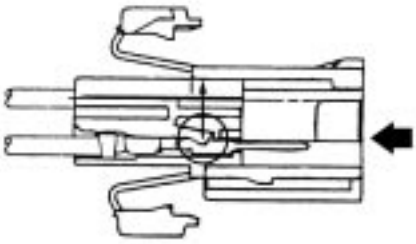 (Double Lock Type) [Housing Lance]	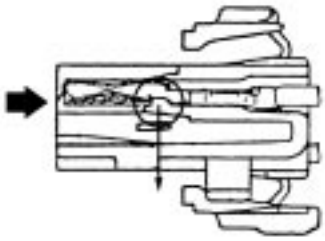 (Double Lock Type) [Housing Lance]

TABLE OF HOUSING CROSS SECTION

Type	○ : Position of the lance ↑ : Direction of lock released ⬆ : Direction of the special tool inserted	
	Male	Female
6.3 Waterproof Type		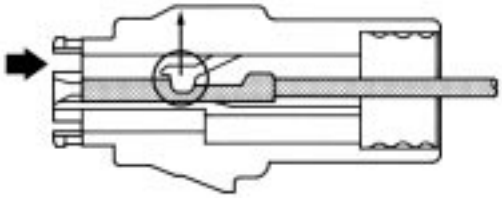 [Housing Lance]
6.3 Waterproof Type		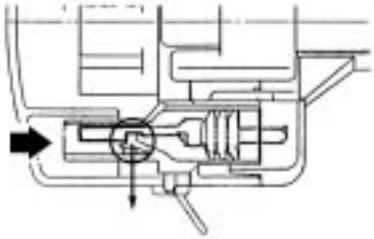 [Housing Lance]
7.7	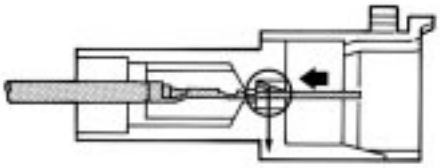 [Terminal Lance]	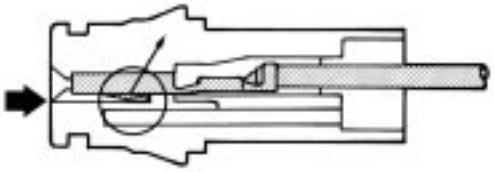 [Terminal Lance]
7.7	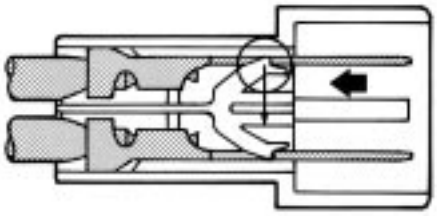 [Housing Lance]	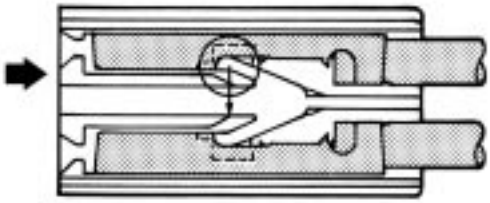 [Housing Lance]

C

TABLE OF HOUSING CROSS SECTION

Type	○ : Position of the lance ↑ : Direction of lock released ⬆ : Direction of the special tool inserted	
	Male	Female
FOG–LP		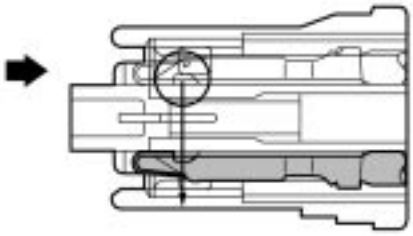 (Double Lock Type) [Housing Lance]
FTC		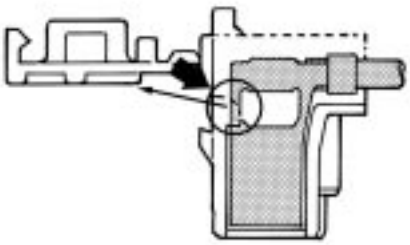 (Double Lock Type) [Housing Lance]
HEAD LAMP Waterproof Type		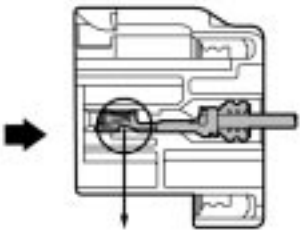 [Housing Lance]
HB3 HB4		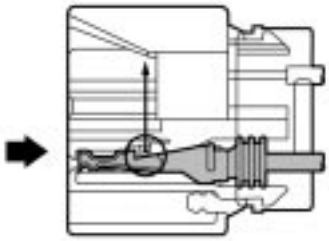 [Housing Lance]

C

TABLE OF HOUSING CROSS SECTION

Type	○ : Position of the lance ↑ : Direction of lock released ⬆ : Direction of the special tool inserted	
	Male	Female
LAC	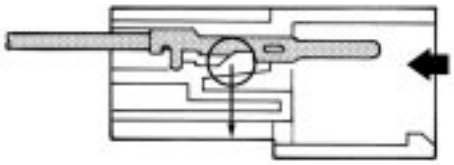 [Housing Lance]	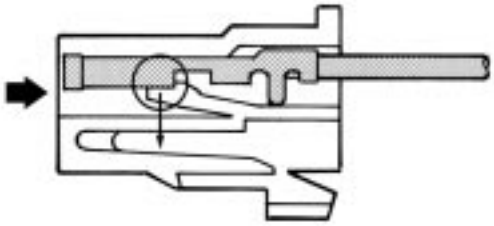 [Housing Lance]
MFPC	—	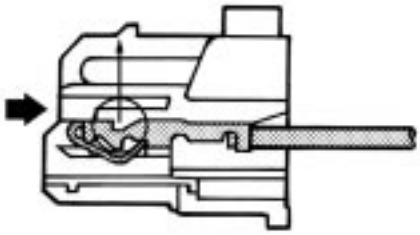 [Housing Lance]
MIC	—	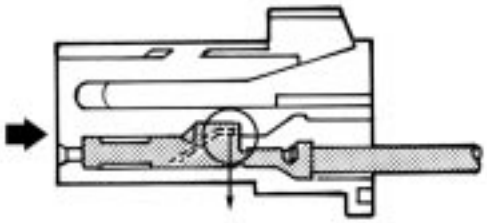 [Terminal Lance]
PULSE LOCK	—	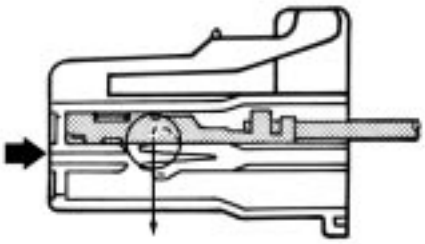 [Housing Lance]

TABLE OF HOUSING CROSS SECTION

Type	○ : Position of the lance ↑ : Direction of lock released ⬆ : Direction of the special tool inserted	
	Male	Female
SFPC		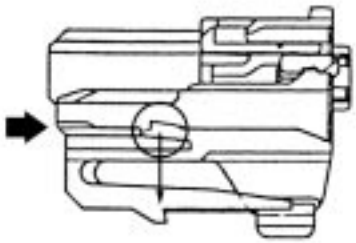 [Housing Lance]
SL		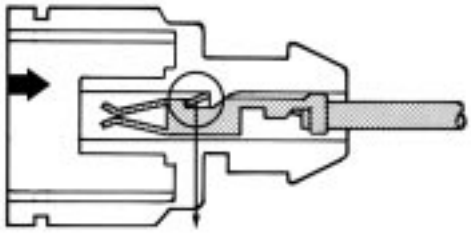 [Terminal Lance]
SP		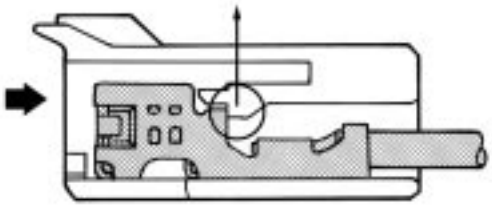 [Housing Lance]
TLC Non–waterproof Type	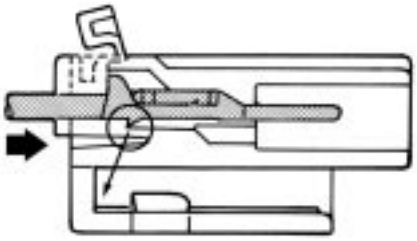 (Double Lock Type) [Housing Lance]	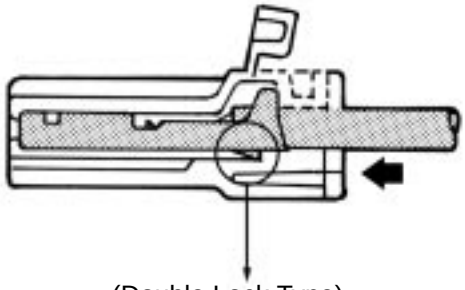 (Double Lock Type) [Housing Lance]

TABLE OF HOUSING CROSS SECTION

Type	○ : Position of the lance ↑ : Direction of lock released ⬆ : Direction of the special tool inserted	
	Male	Female
TLC Waterproof Type	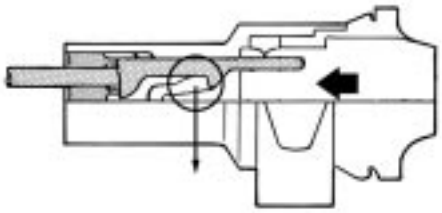 [Housing Lance]	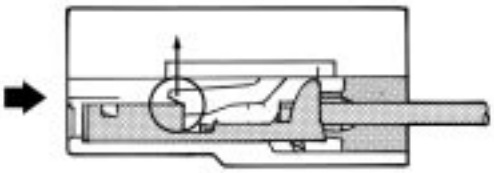 [Housing Lance]
TNS	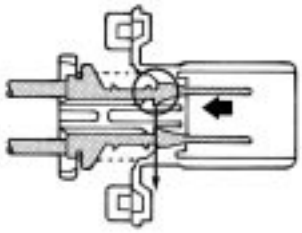 (Double Lock Type) [Housing Lance]	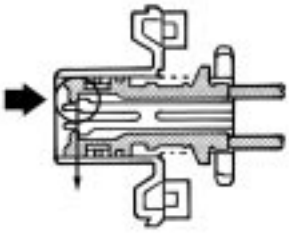 (Double Lock Type) [Housing Lance]
TODC	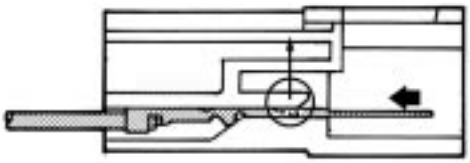 [Housing Lance]	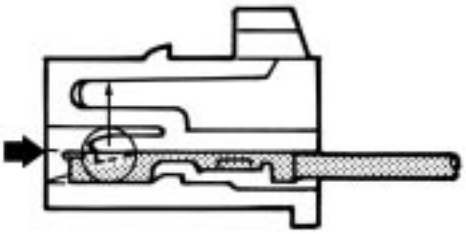 (Double Lock Type) [Housing Lance]

<FEMALE> 1P Waterproof Type

90980–10090	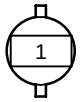 90980–10115	90980–10197	90980–10201
90980–10241	90980–10247 90980–10705	90980–10439	90980–10837
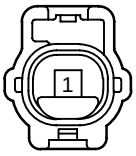 90980–10893	90980–10983	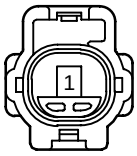 90980–11007	90980–11166
90980–11184	90980–11243	90980–11252	90980–11271
90980–11282	90980–11363	90980–11400	90980–11428

D

<FEMALE> 1P Waterproof Type

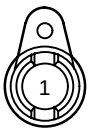 90980–11941	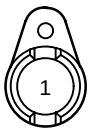 90980–11942	90980–11943	90980–11944
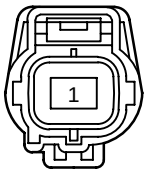 90980–11963	90980–12125	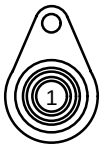 90980–12129 90980–12136	

<FEMALE> 2P Waterproof Type

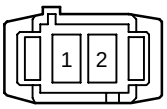 90980–10092	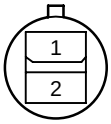 90980–10123	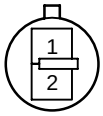 90980–10157	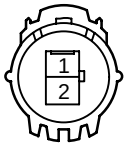 90980–10184
90980–10193	90980–10243	90980–10474	90980–10496
90980–10498 90980–10706	90980–10532	90980–10534	90980–10556
90980–10567	90980–10572	90980–10576	90980–10578
90980–10581	90980–10583	90980–10593	90980–10595

<FEMALE> 2P Waterproof Type

90980–10598	90980–10609	90980–10617	90980–10622
90980–10623	90980–10626	90980–10702	90980–10720
90980–10734	90980–10735	90980–10736	90980–10737
90980–10748 90980–10846	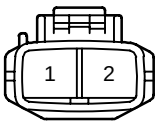 90980–10839	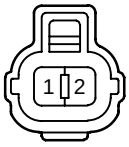 90980–10843	90980–10847
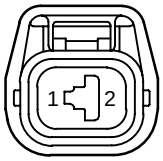 90980–10853	90980–10887	90980–10899	90980–10901

D

<FEMALE> 2P Waterproof Type

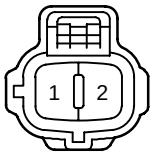 90980–10923	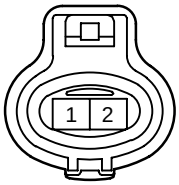 90980–10928	90980–10947	90980–10949
90980–10974	90980–11003	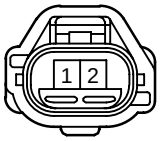 90980–11005	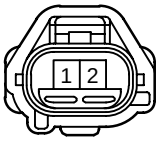 90980–11009
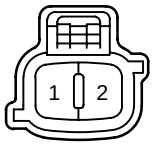 90980–11019	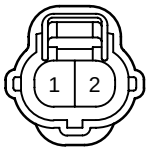 90980–11025 90980–11401	90980–11030	90980–11032
90980–11038	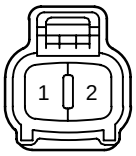 90980–11051	90980–11061	90980–11062
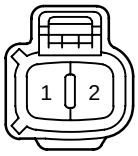 90980–11068	90980–11070	90980–11075	90980–11095

<FEMALE> 2P Waterproof Type

90980–11096	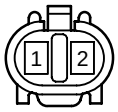 90980–11140	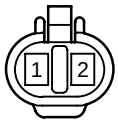 90980–11142	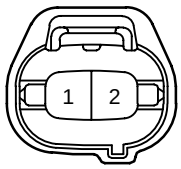 90980–11149
90980–11153	90980–11154 90980–11284	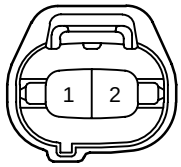 90980–11156	90980–11162
90980–11163	90980–11176	90980–11189	90980–11207
90980–11235	90980–11237	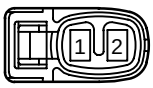 90980–11246	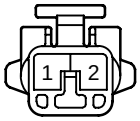 90980–11248
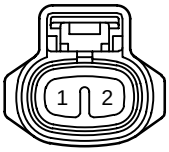 90980–11250	90980–11255	90980–11273	90980–11285

<FEMALE> 2P Waterproof Type

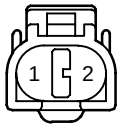 90980–11286	90980–11410	90980–11448	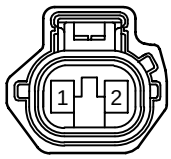 90980–11467
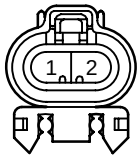 90980–11659	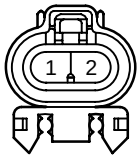 90980–11660	90980–11773	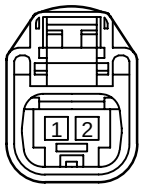 90980–11790
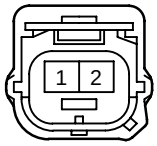 90980–11856	90980–11859	90980–11864	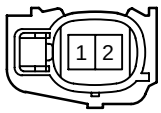 90980–11875
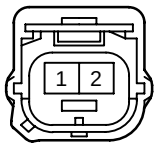 90980–11898	90980–11900	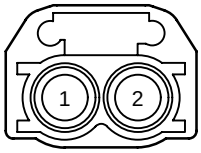 90980–12028	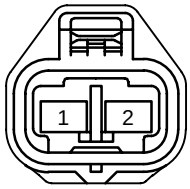 90980–12068
90980–12117	90980–12188	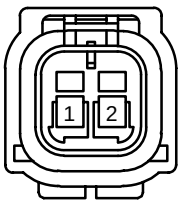 90980–12195	

D

<FEMALE> 3P Waterproof Type

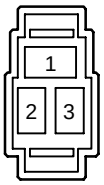 90980–10088	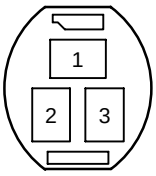 90980–10110	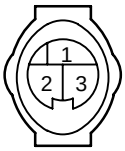 90980–10191	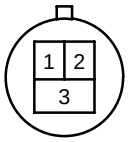 90980–10199
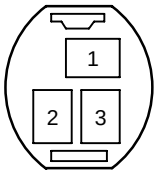 90980–10239	90980–10245	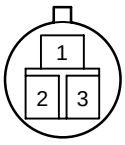 90980–10249	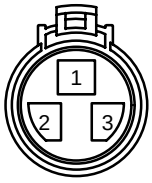 90980–10341 90980–11491
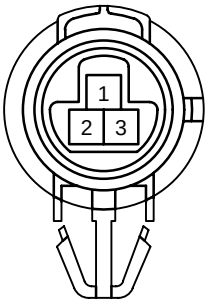 90980–10353	90980–10395	90980–10494	90980–10501
90980–10554	90980–10574	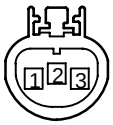 90980–10579	90980–10629
90980–10683	90980–10690 90980–11157	90980–10695	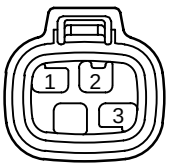 90980–10834

D

<FEMALE> 3P Waterproof Type

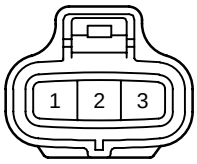 90980–10841	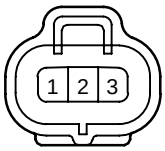 90980–10845	90980–10902	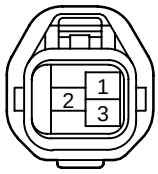 90980–10919
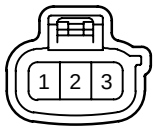 90980–10981	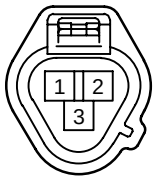 90980–11016	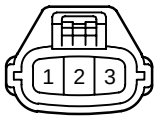 90980–11020	90980–11045
90980–11108	90980–11132	90980–11143	90980–11145
90980–11161	90980–11170	90980–11245	90980–11261
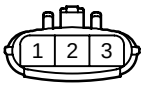 90980–11294	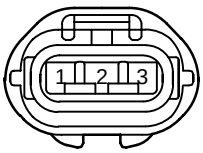 90980–11349	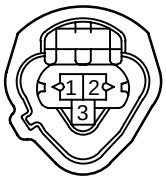 90980–11451	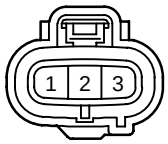 90980–11860

<FEMALE> 3P Waterproof Type

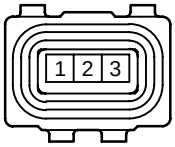 90980–11907	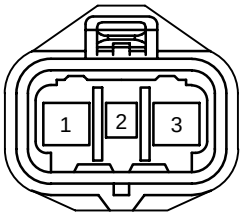 90980–12058	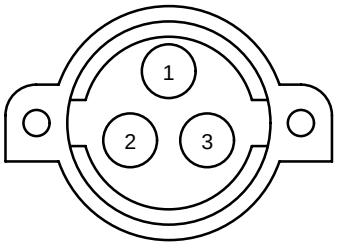 90980–12095	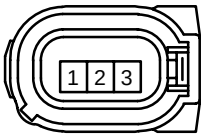 90980–12168
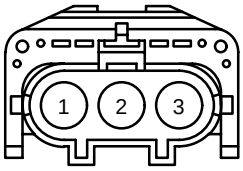 90980–12228			

D

<FEMALE> 4P Waterproof Type

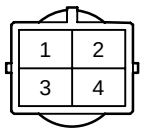 90980–10095	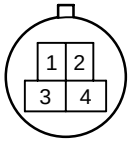 90980–10140 90980–10220	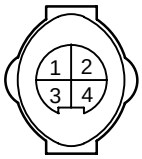 90980–10203	90980–10218
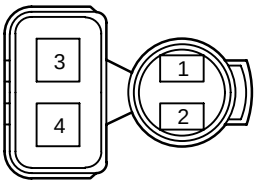 90980–10373	90980–10476	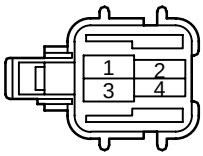 90980–10549	90980–10551
90980–10591	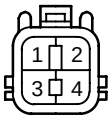 90980–10649	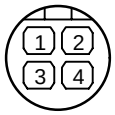 90980–10663 90980–10664	90980–10685
90980–10701	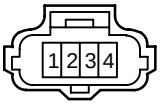 90980–10711	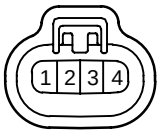 90980–10831	90980–10844
90980–10869	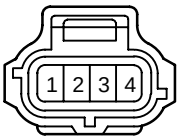 90980–10929	90980–10940	90980–10942

<FEMALE> 4P Waterproof Type

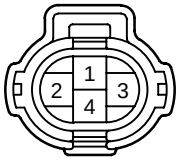 90980–10943	90980–10990	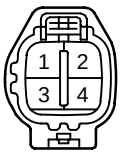 90980–11028	90980–11036
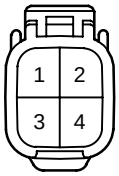 90980–11037	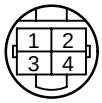 90980–11065 90980–11066	90980–11139	90980–11150
90980–11152	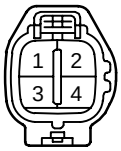 90980–11178	90980–11269	90980–11283
90980–11288	90980–11292	90980–11304	90980–11329 90980–11330
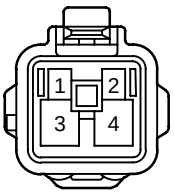 90980–11569	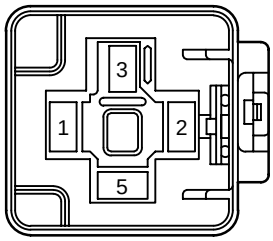 90980–11640	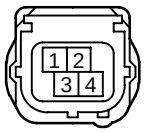 90980–11857	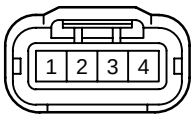 90980–11885

<FEMALE> 4P Waterproof Type

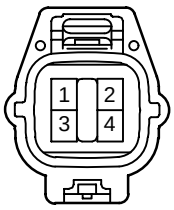 90980–11930	90980–11964	90980–12005	90980–12057

<FEMALE> 5P Waterproof Type

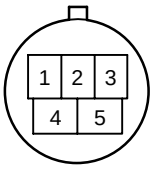 90980–10162	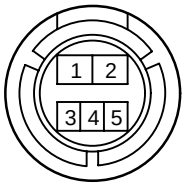 90980–10393	90980–10550	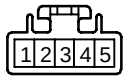 90980–10558
90980–10624	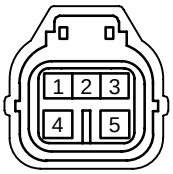 90980–10710	90980–10712	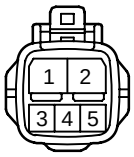 90980–10946
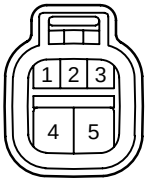 90980–11022	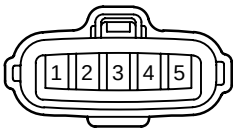 90980–11024	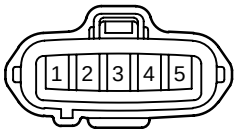 90980–11049	90980–11077
90980–11182	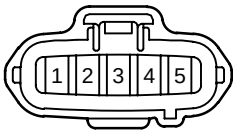 90980–11232	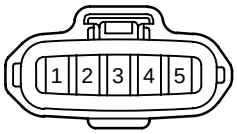 90980–11317	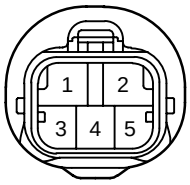 90980–11413
90980–11599	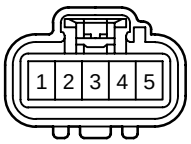 90980–11904	90980–11960	

<FEMALE> 6P Waterproof Type

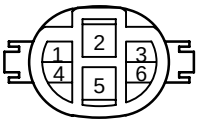 90980–10097	90980–10195	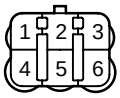 90980–10478	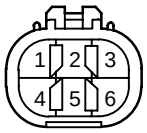 90980–10597
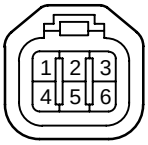 90980–10643	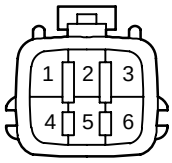 90980–10651	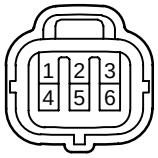 90980–10854	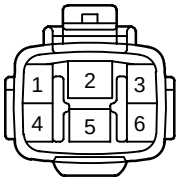 90980–10939
90980–10988	90980–11034	90980–11144	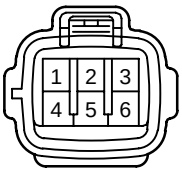 90980–11194
90980–11197	90980–11290	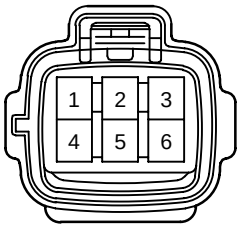 90980–11663	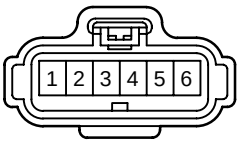 90980–11858

<FEMALE> 7P, 8P Waterproof Type

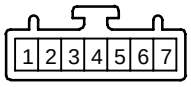 90980–10628	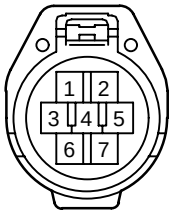 90980–10931	90980–11172	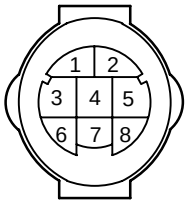 90980–10205
90980–10891	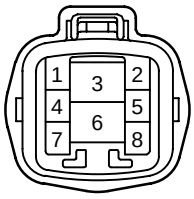 90980–10895	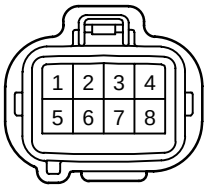 90980–10897	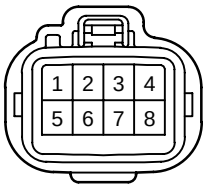 90980–11190
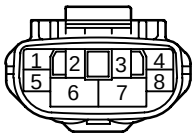 90980–11242	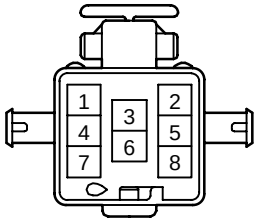 90980–11461	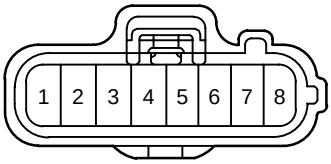 90980–11592	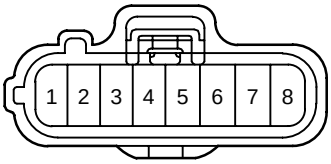 90980–11593
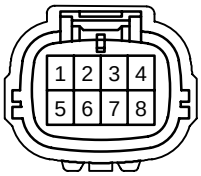 90980–12080	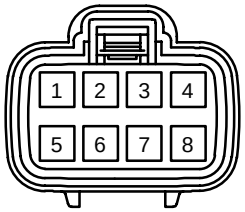 90980–12164		

<FEMALE> 9P Waterproof Type

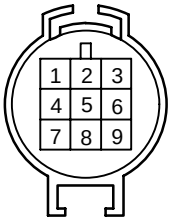 90980–10380 90980–10381	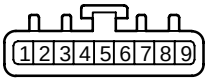 90980–10678	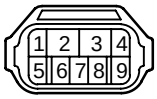 90980–10686
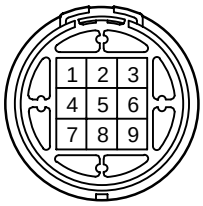 90980–10776	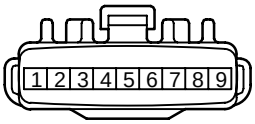 90980–11192	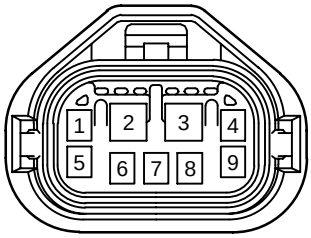 90980–11643
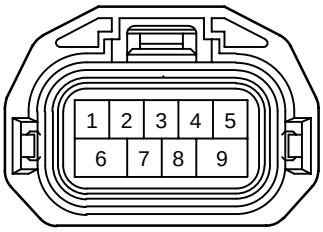 90980–11784		

<FEMALE> 10P Waterproof Type

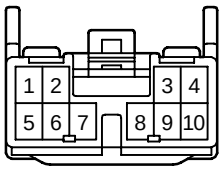 90980–11231	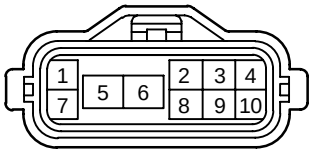 90980–11332
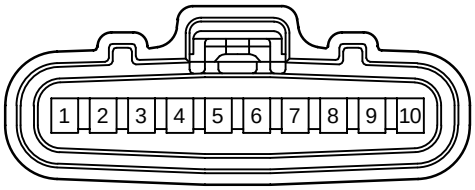 90980–11653	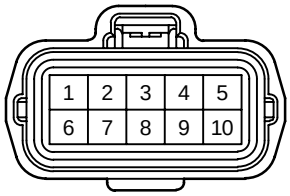 90980–11658

<FEMALE> 11P Waterproof Type

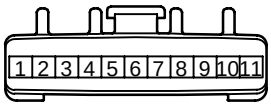 90980–11174	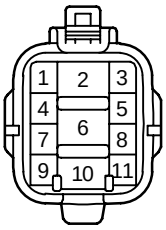 90980–11240
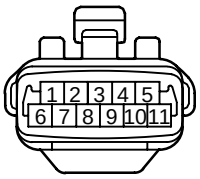 90980–11257	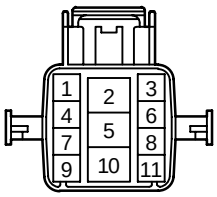 90980–11612

<FEMALE> 12P Waterproof Type

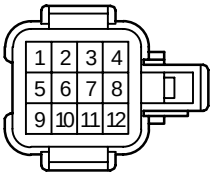

90980–10548

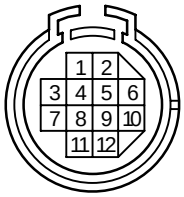

90980–10569

90980–11087

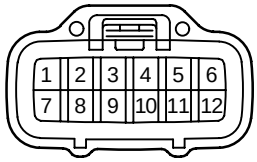

90980–11151

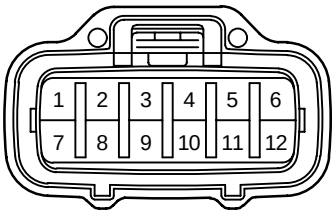

90980–11664

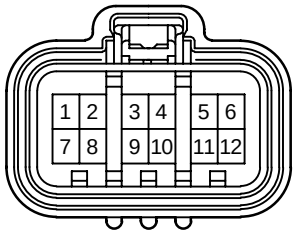

90980–11698

<FEMALE> 13P, 15P Waterproof Type

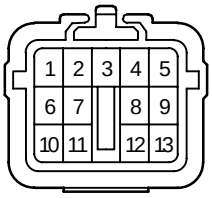 90980–10654	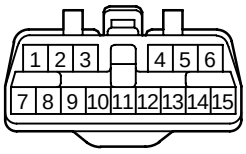 90980–11089
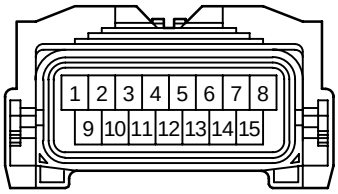 90980–11677	

<FEMALE> 16P, 17P, 23P Waterproof Type

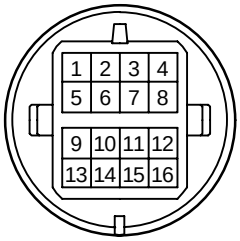

90980–10101

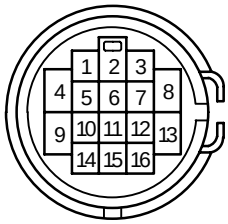

90980–10288

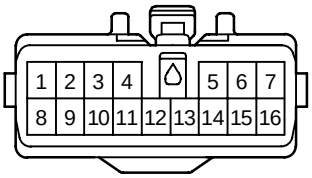

90980–11463

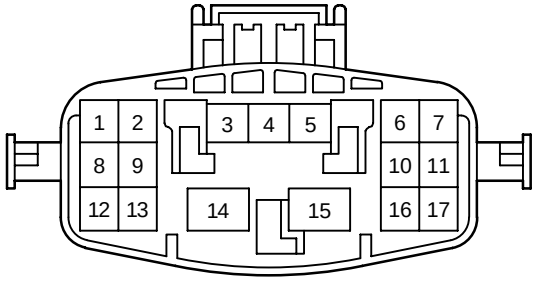

90980–11601

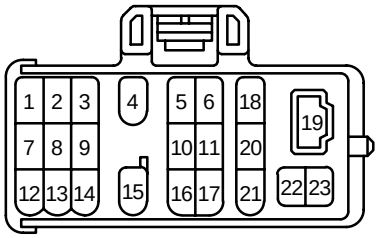

90980–11195

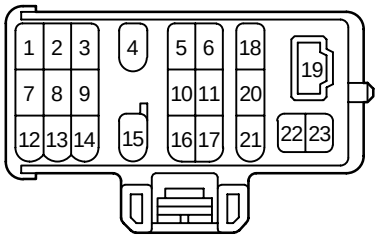

90980–11323

<FEMALE> 24P, 25P Waterproof Type

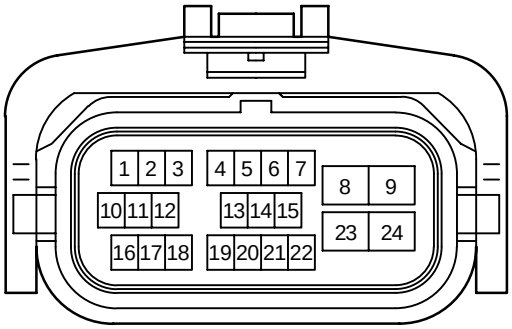

90980–11851

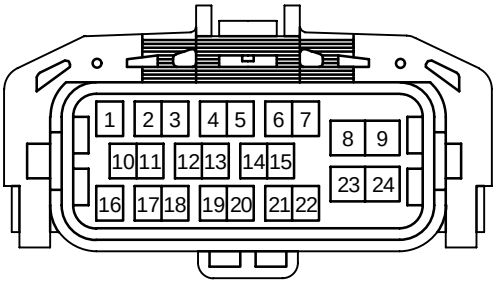

90980–11882

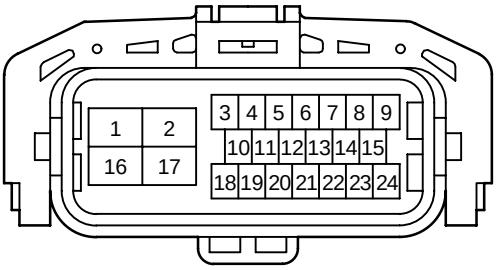

90980–11893

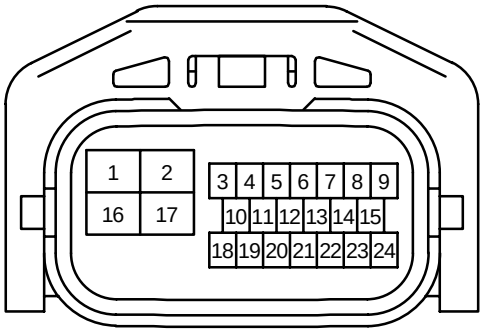

90980–12116

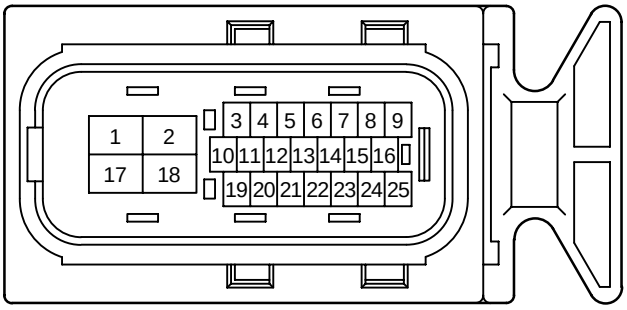

90980–11861

<FEMALE> 34P, 40P Waterproof Type

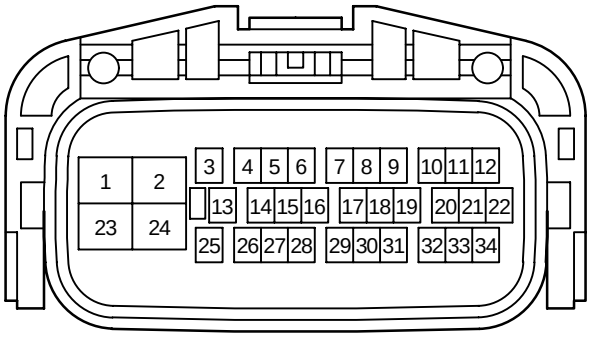

90980–12020

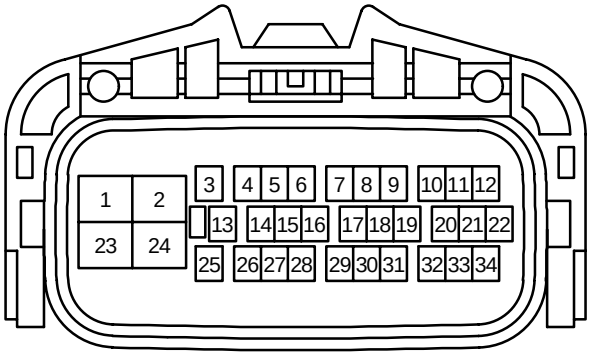

90980–12021
90980–12022

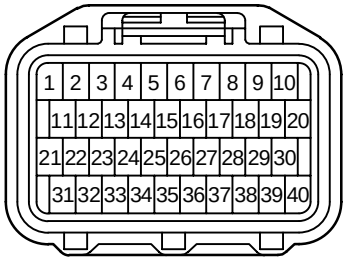

90980–11215

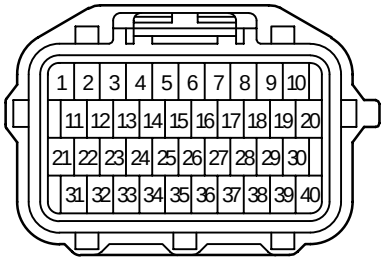

90980–11566

<FEMALE> 80P Waterproof Type

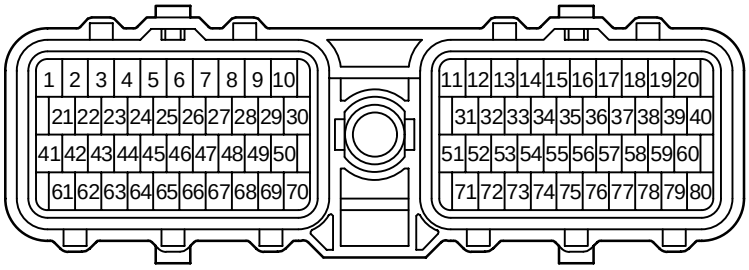

90980–11214

<FEMALE> 1P Non–waterproof Type

90980–10165	90980–10179	90980–10183	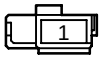 90980–10229
90980–10250	90980–10252	90980–10254	90980–10332
90980–10343	90980–10359	90980–10363	90980–10398
90980–10435	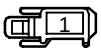 90980–10619	90980–10652	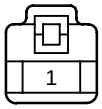 90980–10688
90980–10703	90980–10782	90980–10786	90980–10792

<FEMALE> 1P Non–waterproof Type

90980–10871	90980–10911	90980–10912	90980–10913
90980–10914	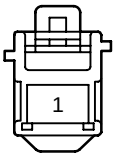 90980–10995	90980–11147	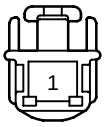 90980–11259
90980–11315	90980–11703	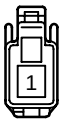 90980–11738	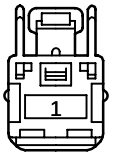 90980–11775
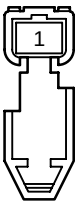 90980–11853	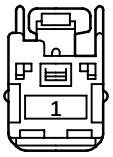 90980–11881		

<FEMALE> 2P Non–waterproof Type

90980–10012	90980–10039	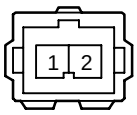 90980–10069	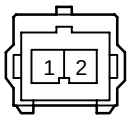 90980–10108
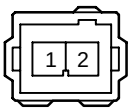 90980–10109	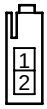 90980–10121	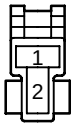 90980–10124	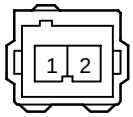 90980–10141
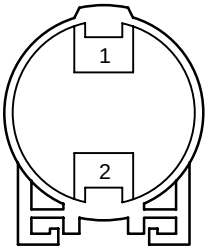 90980–10185	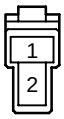 90980–10214	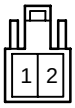 90980–10256	90980–10298
90980–10320	90980–10333	90980–10345	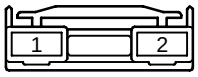 90980–10348
90980–10355	90980–10357	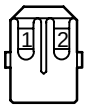 90980–10362	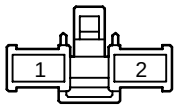 90980–10385

<FEMALE> 2P Non–waterproof Type

90980–10423	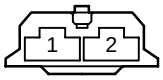 90980–10425	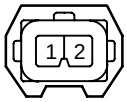 90980–10426	90980–10465
90980–10481	90980–10482	90980–10491	90980–10511
90980–10512	90980–10559	90980–10621	90980–10637
90980–10679	90980–10760	90980–10783	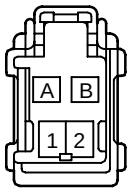 90980–10823
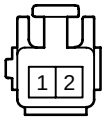 90980–10825	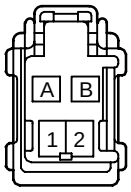 90980–10835	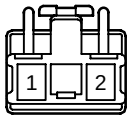 90980–10850	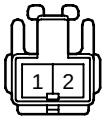 90980–10855

<FEMALE> 2P Non–waterproof Type

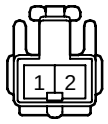 90980–10860	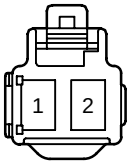 90980–10903	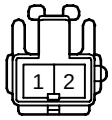 90980–10906	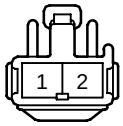 90980–10916
90980–10935	90980–10960	90980–10962	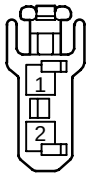 90980–11080
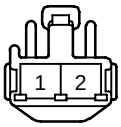 90980–11094	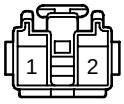 90980–11098	90980–11148	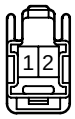 90980–11212
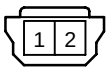 90980–11227	90980–11278	90980–11306	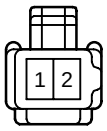 90980–11369
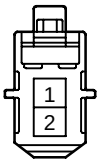 90980–11386	90980–11388	90980–11396	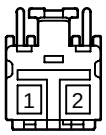 90980–11429

<FEMALE> 2P Non–waterproof Type

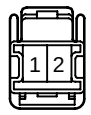 90980–11436	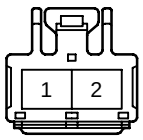 90980–11579	90980–11608	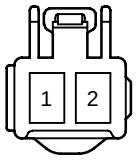 90980–11684
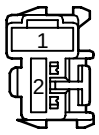 90980–11687	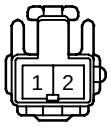 90980–11736	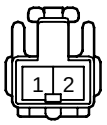 90980–11769	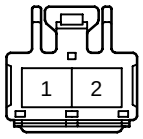 90980–11824
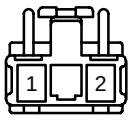 90980–11839	90980–11840	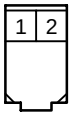 90980–11862	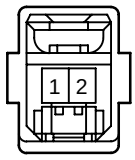 90980–11884
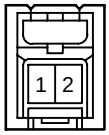 90980–11886	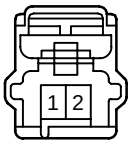 90980–11890	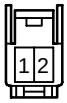 90980–11918	90980–11919
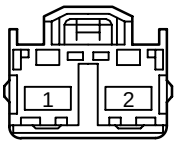 90980–11996	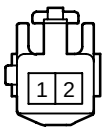 90980–12014	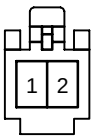 90980–12039	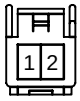 90980–12063

<FEMALE> 2P Non–waterproof Type

90980–12088	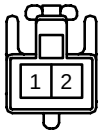 90980–12089	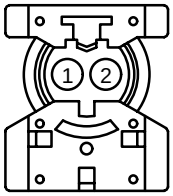 90980–12109	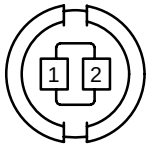 90980–12110
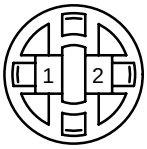 90980–12111	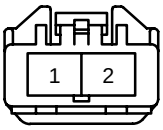 90980–12120	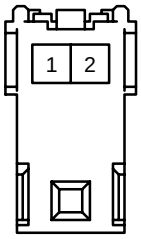 90980–12138	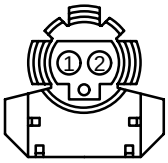 90980–12191
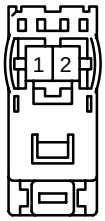 90980–12219 90980–12242	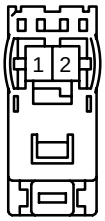 90980–12224 90980–12243	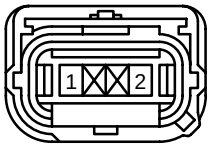 90980–12241	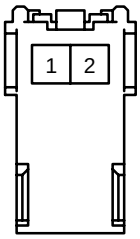 90980–12253

<FEMALE> 3P Non–waterproof Type

90980–10056	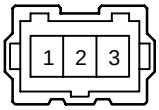 90980–10070	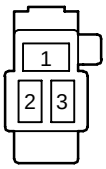 90980–10072	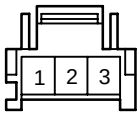 90980–10111
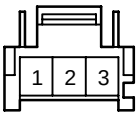 90980–10143	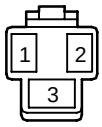 90980–10189	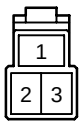 90980–10216	90980–10222
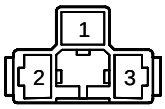 90980–10228	90980–10232	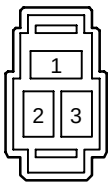 90980–10234	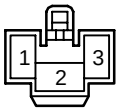 90980–10258
90980–10365	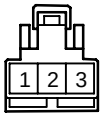 90980–10420	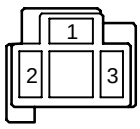 90980–10428	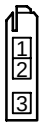 90980–10464
90980–10483	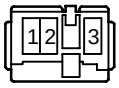 90980–10489	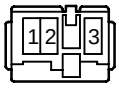 90980–10490	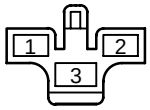 90980–10618

<FEMALE> 3P Non–waterproof Type

90980–10638 90980–10660	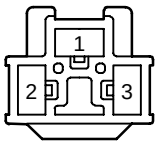 90980–10704	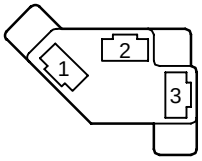 90980–10747	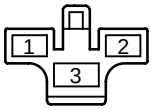 90980–10784
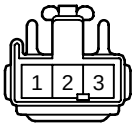 90980–10908	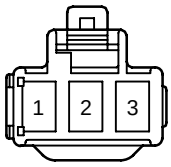 90980–10956	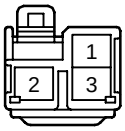 90980–10980	90980–11053
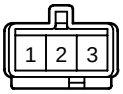 90980–11071	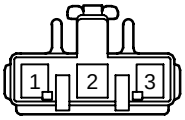 90980–11079	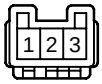 90980–11251	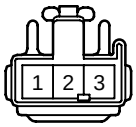 90980–11296
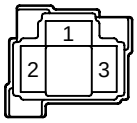 90980–11314	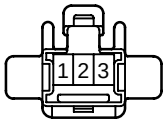 90980–11336	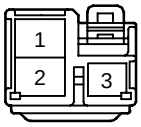 90980–11387	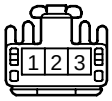 90980–11471
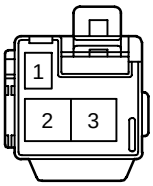 90980–11485	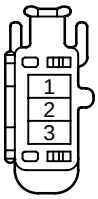 90980–11490	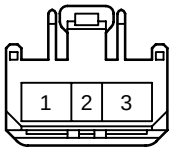 90980–11667	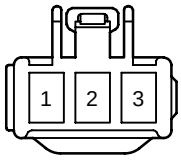 90980–11685

<FEMALE> 3P Non–waterproof Type

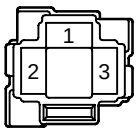 90980–11731	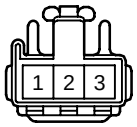 90980–11764	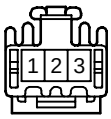 90980–11777	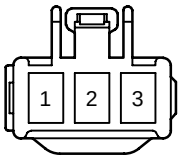 90980–11880
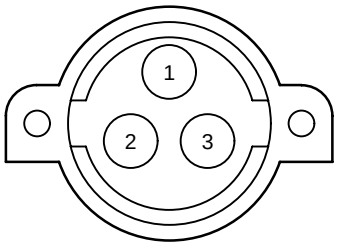 90980–11938	 90980–11987	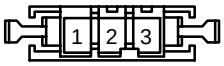 90980–12197	

<FEMALE> 4P Non–waterproof Type

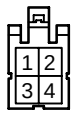 90980–10002	90980–10127	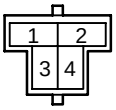 90980–10142	90980–10171
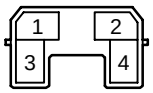 90980–10196	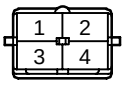 90980–10221	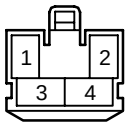 90980–10260	90980–10307
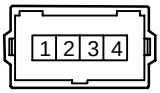 90980–10378	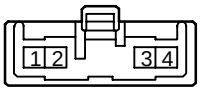 90980–10400	90980–10467	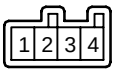 90980–10484
90980–10504	90980–10514	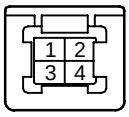 90980–10515	90980–10601
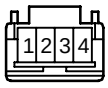 90980–10645	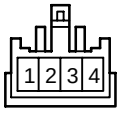 90980–10692	90980–10716	90980–10717

<FEMALE> 4P Non–waterproof Type

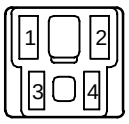 90980–10759	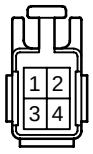 90980–10795	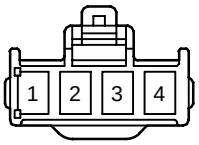 90980–10867	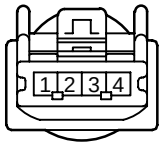 90980–10904
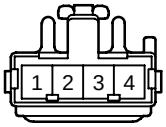 90980–11013	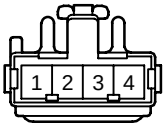 90980–11090	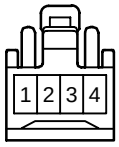 90980–11107	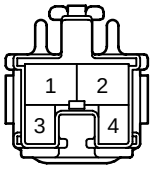 90980–11118
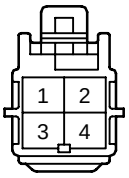 90980–11136	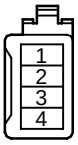 90980–11187	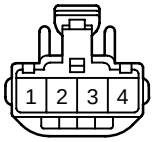 90980–11313	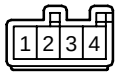 90980–11398
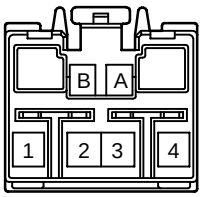 90980–11427	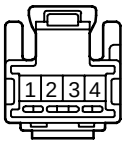 90980–11494	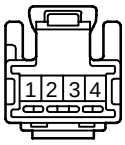 90980–11495	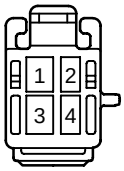 90980–11606
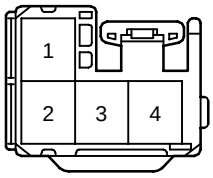 90980–11662	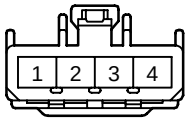 90980–11676	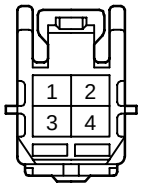 90980–11742	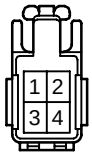 90980–11766

<FEMALE> 4P Non–waterproof Type

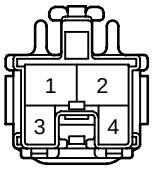 90980–11771	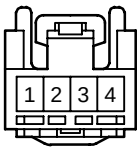 90980–11792	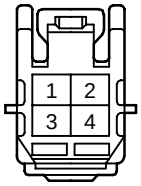 90980–11799	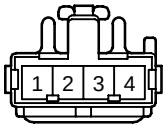 90980–11841
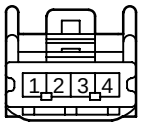 90980–11842	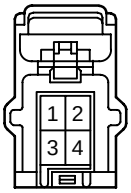 90980–11892	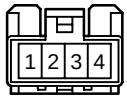 90980–11950	90980–11988
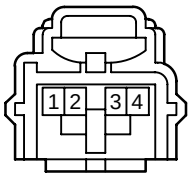 90980–12017	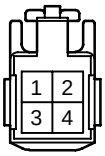 90980–12018	90980–12019	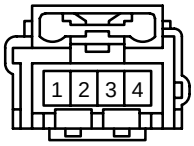 90980–12160
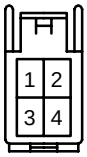 90980–12211	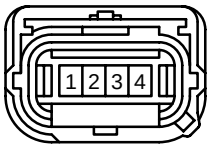 90980–12225		

<FEMALE> 5P Non–waterproof Type

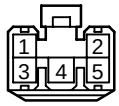 90980–10041	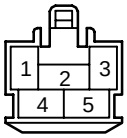 90980–10262	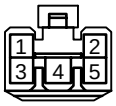 90980–10274	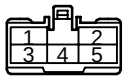 90980–10339
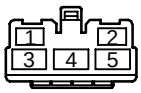 90980–10340	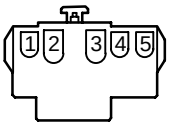 90980–10376	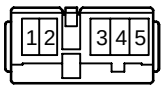 90980–10487	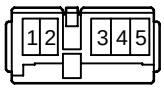 90980–10488
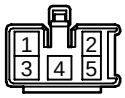 90980–10509	90980–10520	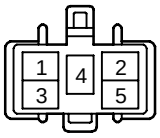 90980–10610	90980–10631
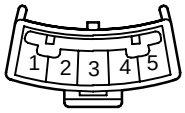 90980–10644	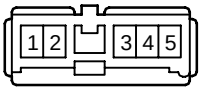 90980–10659	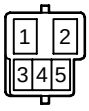 90980–10713	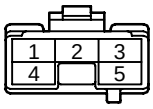 90980–10718
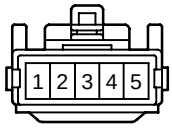 90980–10789	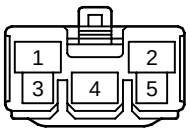 90980–10888	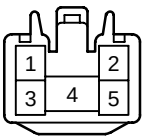 90980–10986	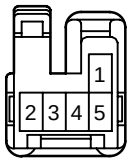 90980–11319

<FEMALE> 5P Non–waterproof Type

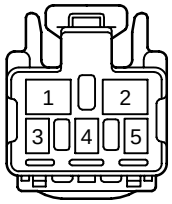 90980–11603	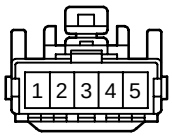 90980–11772	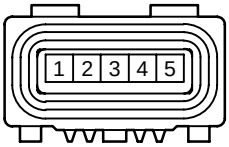 90980–11908	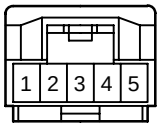 90980–11909
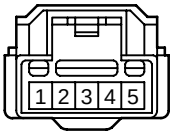 90980–11921	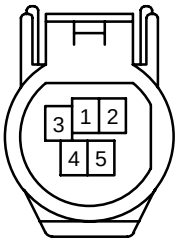 90980–12190		

<FEMALE> 6P Non–waterproof Type

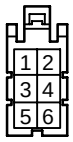 90980–10004	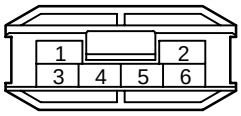 90980–10029	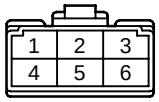 90980–10173	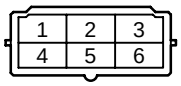 90980–10224
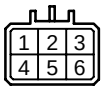 90980–10313	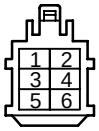 90980–10334	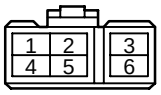 90980–10335	90980–10367
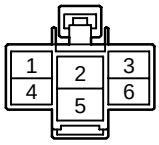 90980–10382	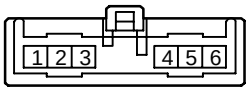 90980–10402	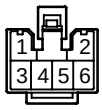 90980–10414	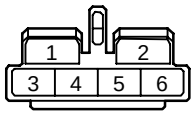 90980–10447
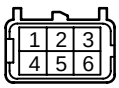 90980–10604	90980–10605	90980–10672	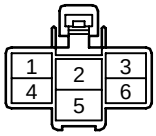 90980–10673
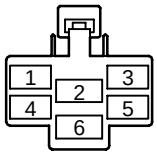 90980–10766	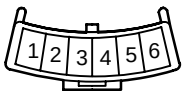 90980–10785	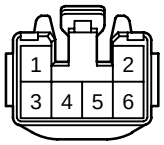 90980–10797	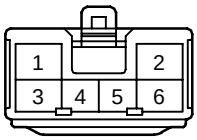 90980–10889

<FEMALE> 6P Non–waterproof Type

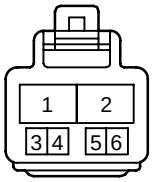 90980–10910	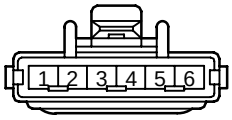 90980–10933	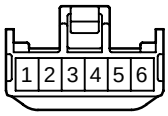 90980–10957	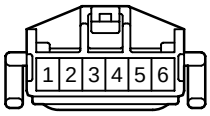 90980–10964
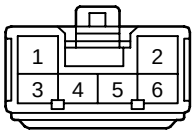 90980–10976	90980–10996	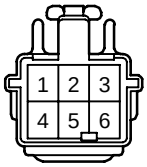 90980–11001	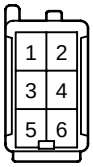 90980–11011
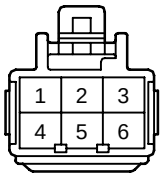 90980–11091	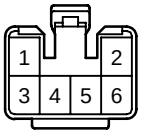 90980–11280	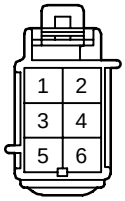 90980–11297	90980–11326
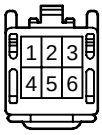 90980–11488	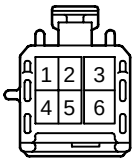 90980–11493	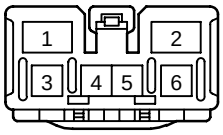 90980–11552	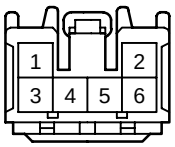 90980–11583
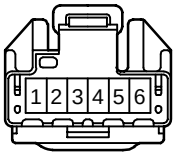 90980–11616	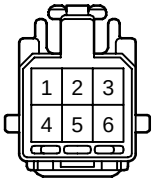 90980–11617	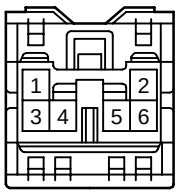 90980–11697	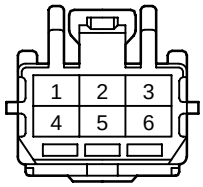 90980–11778

<FEMALE> 6P Non–waterproof Type

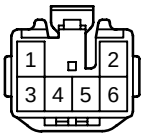 90980–11780	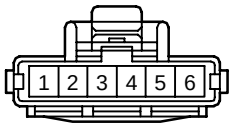 90980–11820	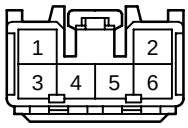 90980–11879	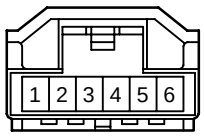 90980–11986
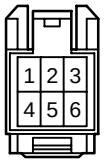 90980–12012	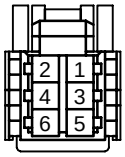 90980–12056	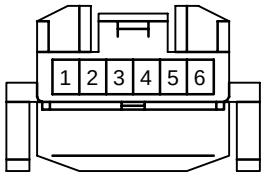 90980–12067	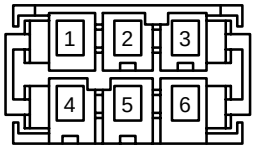 90980–12199
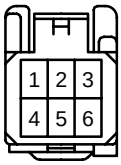 90980–12209			

<FEMALE> 7P Non–waterproof Type

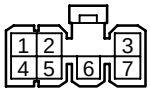 90980–10043	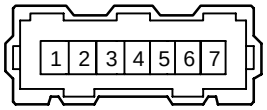 90980–10071	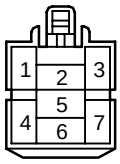 90980–10264	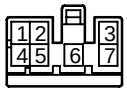 90980–10311
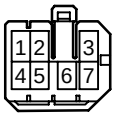 90980–10452	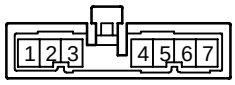 90980–10460	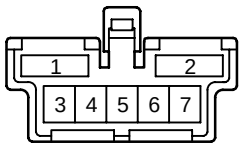 90980–10729 90980–10772	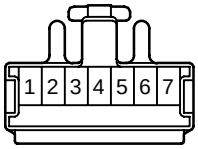 90980–11165
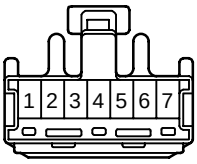 90980–11340	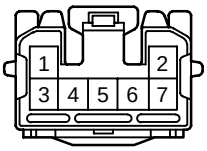 90980–11529	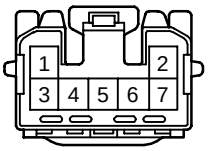 90980–11740	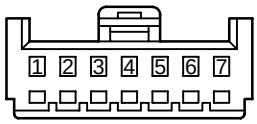 90980–11794
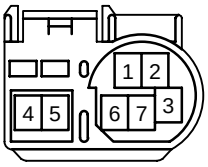 90980–12060			

<FEMALE> 8P Non–waterproof Type

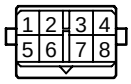 90980–10019	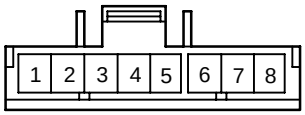 90980–10112	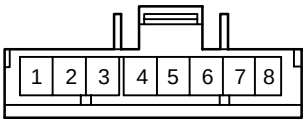 90980–10113	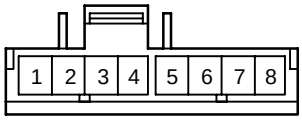 90980–10119
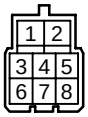 90980–10148	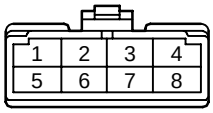 90980–10175	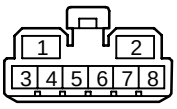 90980–10209	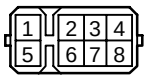 90980–10280
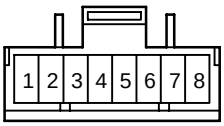 90980–10301	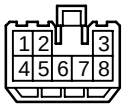 90980–10321	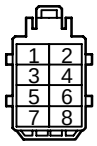 90980–10336	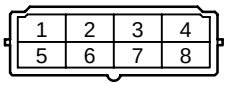 90980–10358
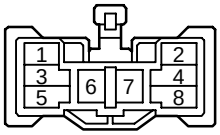 90980–10404	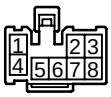 90980–10419	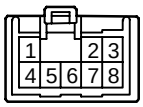 90980–10431	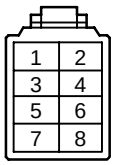 90980–10449
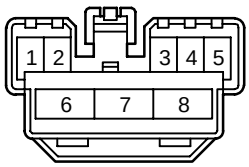 90980–10463	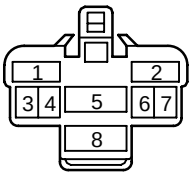 90980–10517	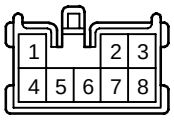 90980–10523	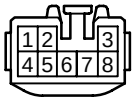 90980–10799

<FEMALE> 8P Non–waterproof Type

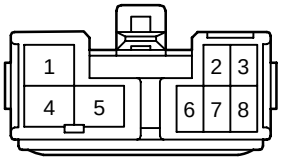 90980–10877 90980–11439	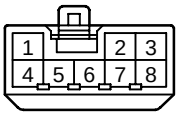 90980–10926	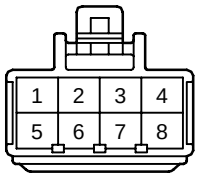 90980–11092	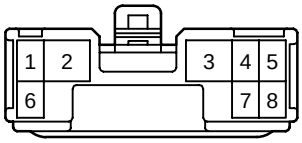 90980–11130
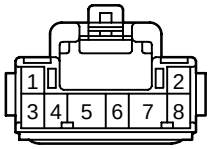 90980–11279	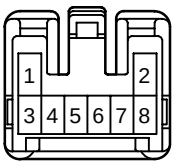 90980–11321	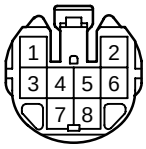 90980–11354	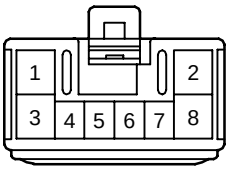 90980–11362
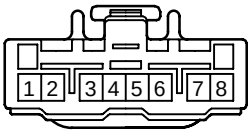 90980–11397	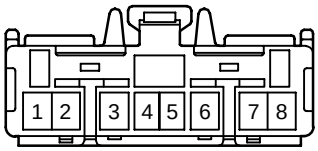 90980–11459	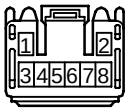 90980–11533	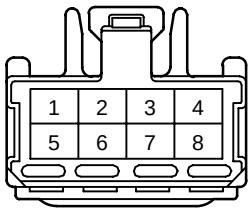 90980–11615
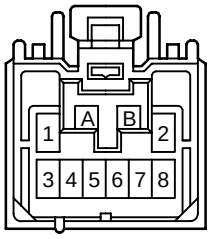 90980–11630	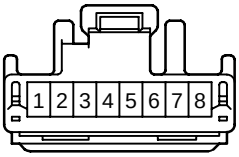 90980–11633	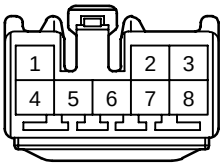 90980–11686	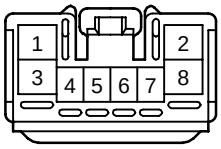 90980–11701
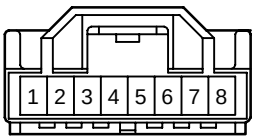 90980–11989	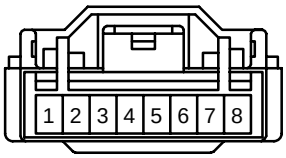 90980–12091	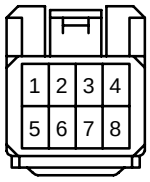 90980–12113	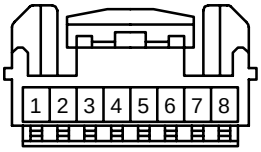 90980–12217

<FEMALE> 8P Non–waterproof Type

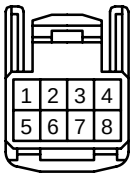 90980–12221			

<FEMALE> 9P Non–waterproof Type

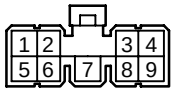 90980–10045	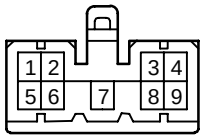 90980–10133	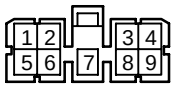 90980–10152	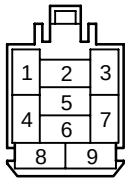 90980–10266
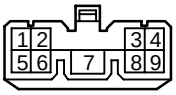 90980–10318	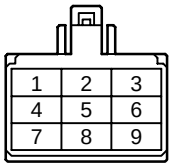 90980–10386	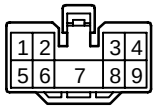 90980–10536	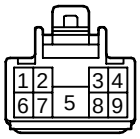 90980–11277
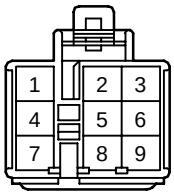 90980–11302	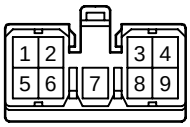 90980–11479	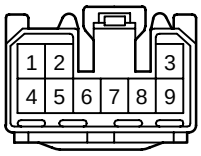 90980–11535	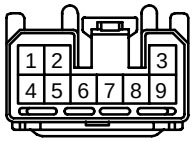 90980–11710
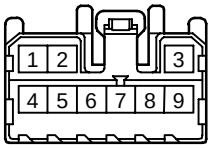 90980–12026			

<FEMALE> 10P Non–waterproof Type

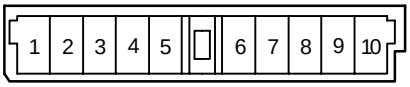 90980–10158	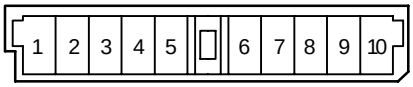 90980–10159	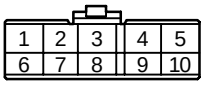 90980–10177
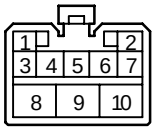 90980–10282	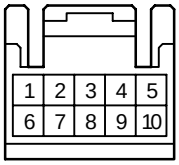 90980–10294	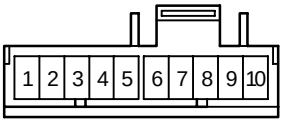 90980–10302
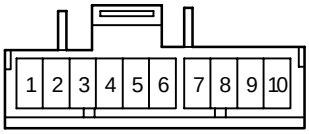 90980–10304	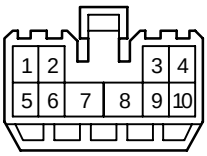 90980–10322	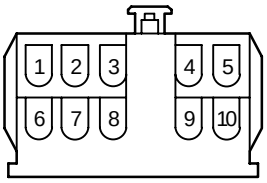 90980–10377
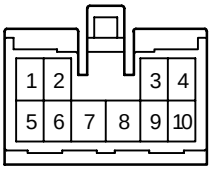 90980–10469	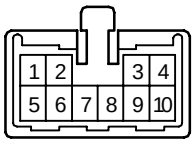 90980–10528	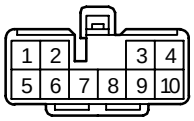 90980–10669

<FEMALE> 10P Non–waterproof Type

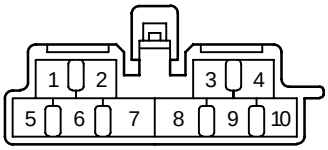 90980–10721	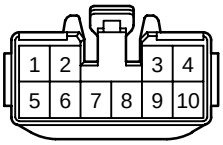 90980–10801	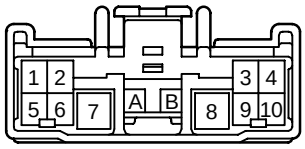 90980–10822
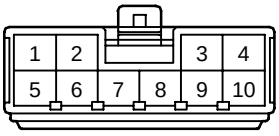 90980–10862	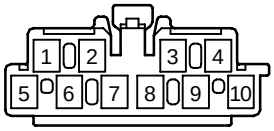 90980–10965	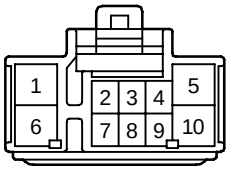 90980–10993
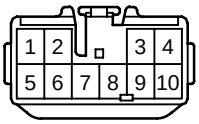 90980–10997	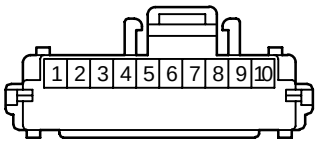 90980–11116	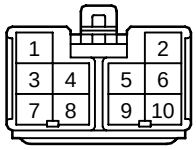 90980–11276
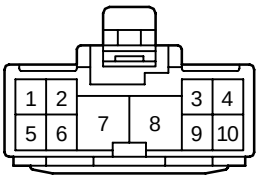 90980–11366	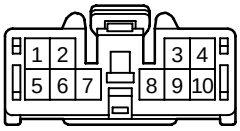 90980–11450	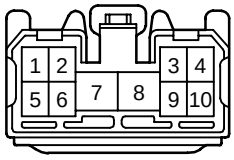 90980–11527

<FEMALE> 10P Non–waterproof Type

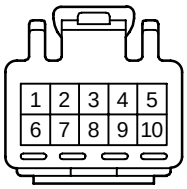 90980–11537	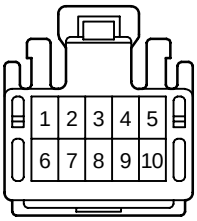 90980–11581	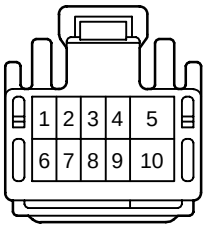 90980–11614
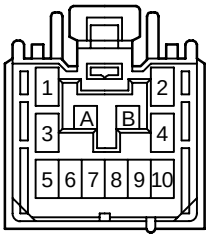 90980–11642	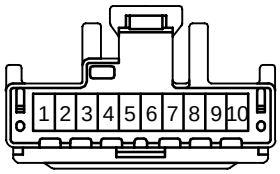 90980–11657	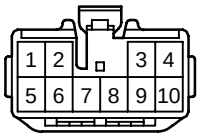 90980–11781
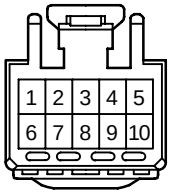 90980–11817	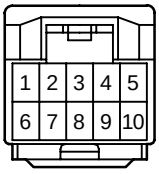 90980–11923	 90980–11924
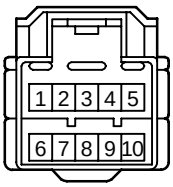 90980–11948	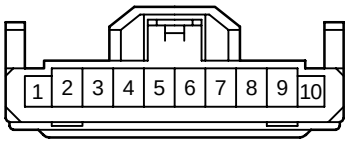 90980–12008	 90980–12135

<FEMALE> 10P Non–waterproof Type

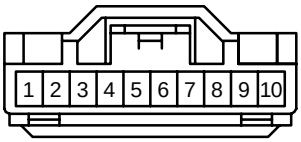 90980–12162	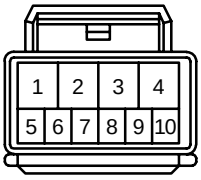 90980–12226	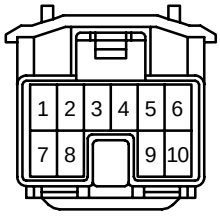 90980–12272

<FEMALE> 11P Non–waterproof Type

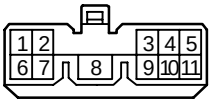 90980–10319	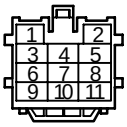 90980–10337	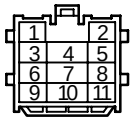 90980–10338
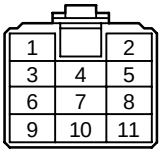 90980–10450	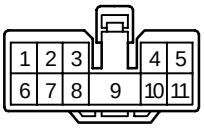 90980–10537	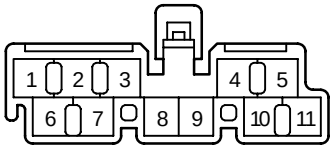 90980–10723
90980–10727	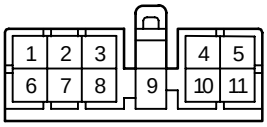 90980–10781	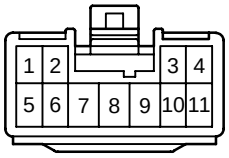 90980–10830
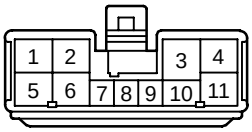 90980–10873	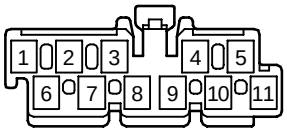 90980–10966	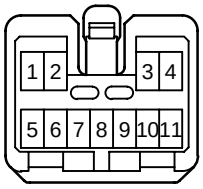 90980–11041

<FEMALE> 11P Non–waterproof Type

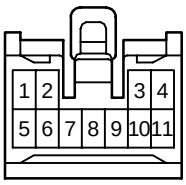 90980–11083	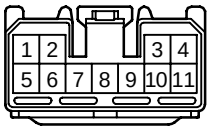 90980–11539	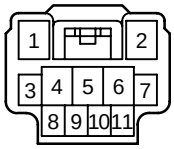 90980–12003

<FEMALE> 12P Non–waterproof Type

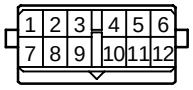 90980–10006	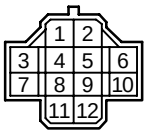 90980–10150	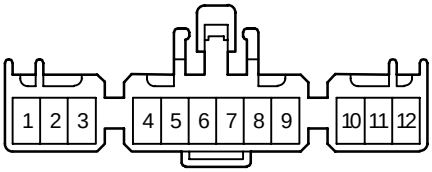 90980–10153
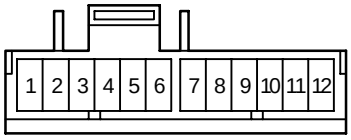 90980–10303	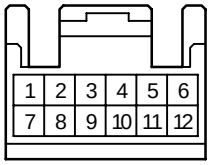 90980–10351	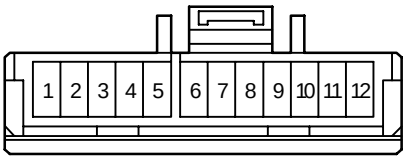 90980–10372
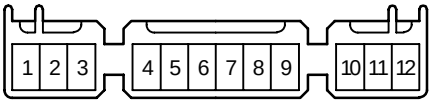 90980–10397	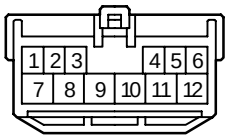 90980–10406	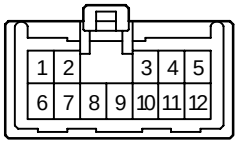 90980–10408
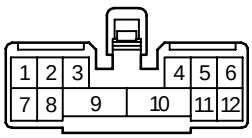 90980–10421	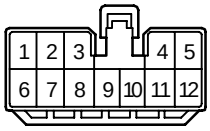 90980–10432	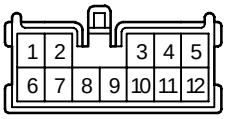 90980–10524

<FEMALE> 12P Non–waterproof Type

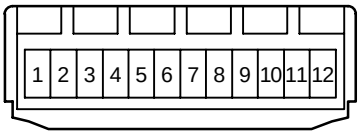 90980–10565	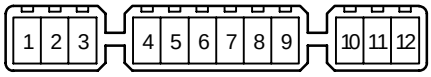 90980–10632	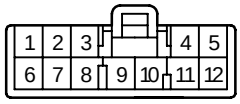 90980–10658
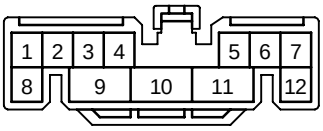 90980–10714	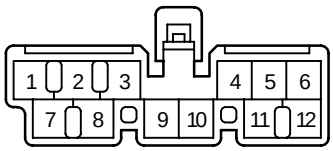 90980–10724	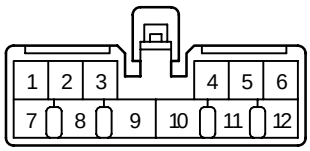 90980–10725
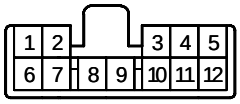 90980–10743	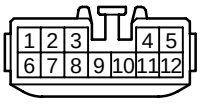 90980–10803	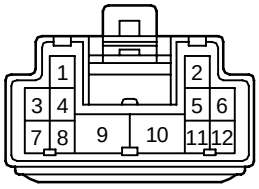 90980–10879
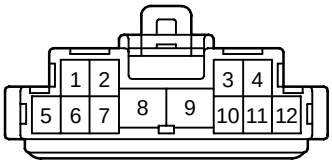 90980–10932	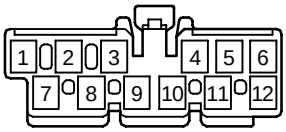 90980–10967	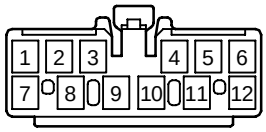 90980–10968

<FEMALE> 12P Non–waterproof Type

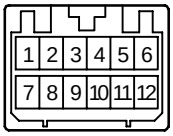 90980–10973	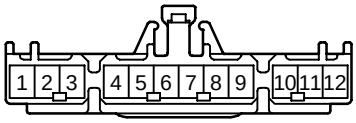 90980–11121	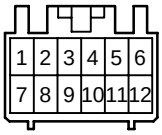 90980–11129
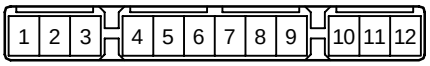 90980–11311	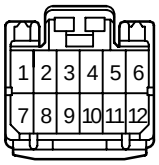 90980–11408	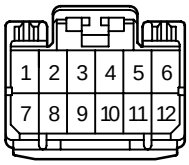 90980–11424
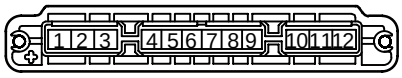 90980–11453	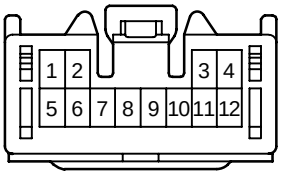 90980–11475	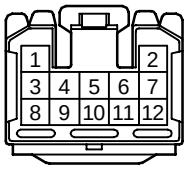 90980–11531
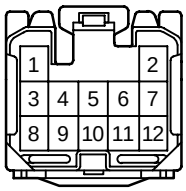 90980–11626	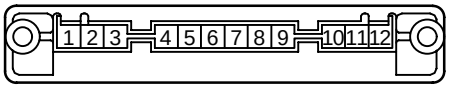 90980–11649	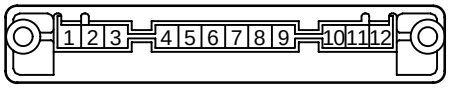 90980–11656

<FEMALE> 12P Non–waterproof Type

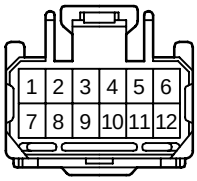 90980–11661	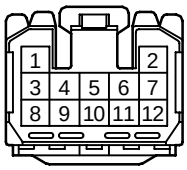 90980–11693	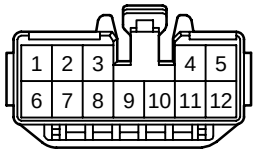 90980–11720
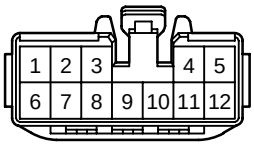 90980–11782	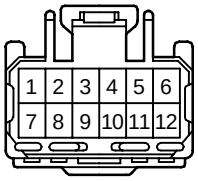 90980–11847	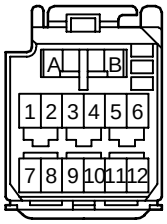 90980–11867
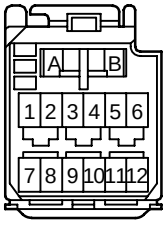 90980–11869	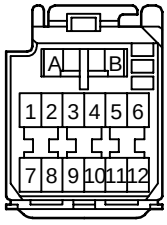 90980–11871	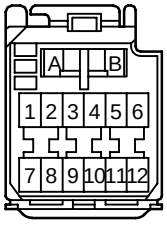 90980–11873
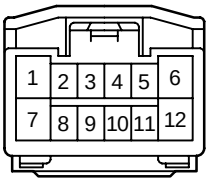 90980–11947	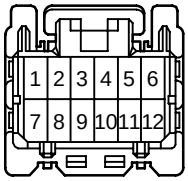 90980–12032	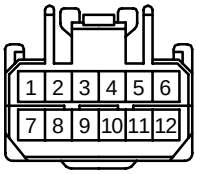 90980–12090

<FEMALE> 12P Non–waterproof Type

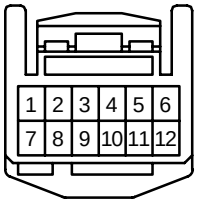 90980–12183	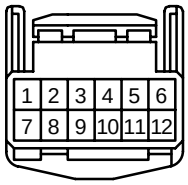 90980–12222	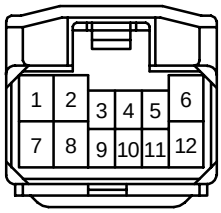 90980–12273

<FEMALE> 13P Non–waterproof Type

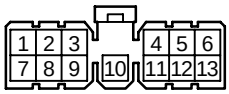 90980–10033	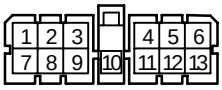 90980–10062	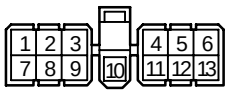 90980–10132
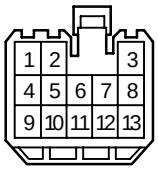 90980–10324	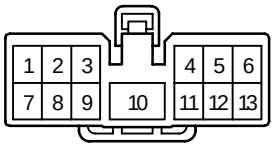 90980–10480	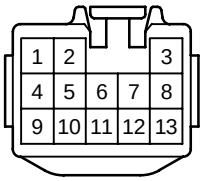 90980–10805
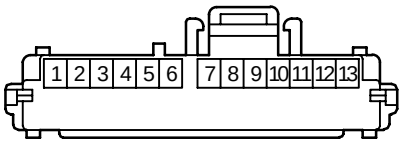 90980–11114	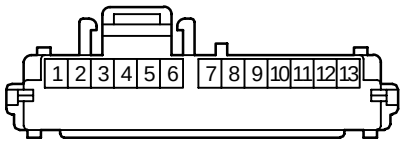 90980–11115	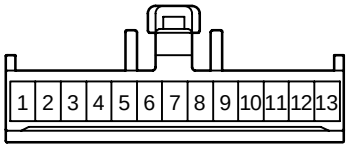 90980–11199
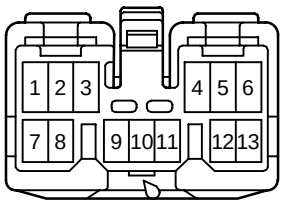 90980–11350	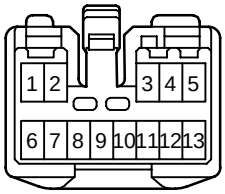 90980–11394	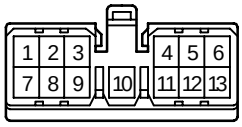 90980–11478

<FEMALE> 13P Non–waterproof Type

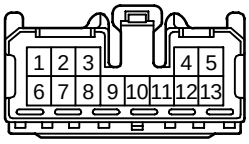 90980–11542	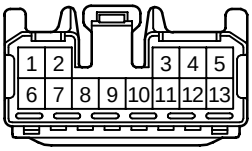 90980–11604	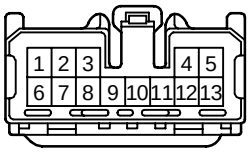 90980–11695
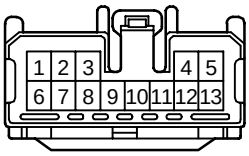 90980–11714	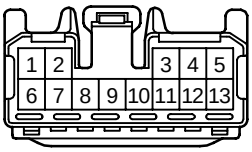 90980–11827	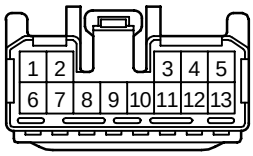 90980–11848
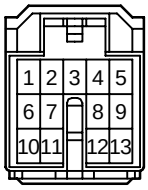 90980–11952	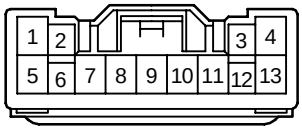 90980–12007	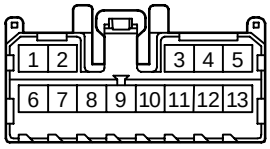 90980–12027

<FEMALE> 14P Non–waterproof Type

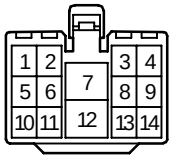

90980–10330

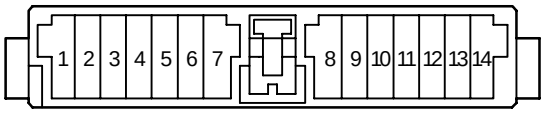

90980–10368

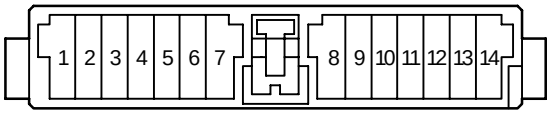

90980–10369

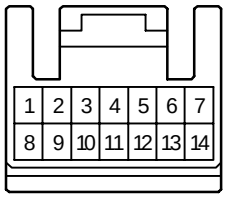

90980–10371

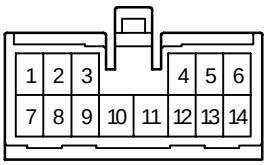

90980–10471

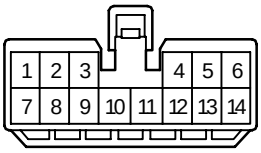

90980–10507

<FEMALE> 14P Non–waterproof Type

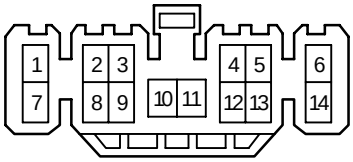

90980–10538

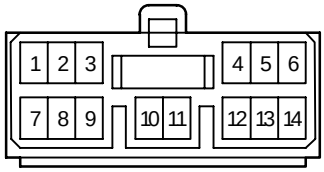

90980–10608

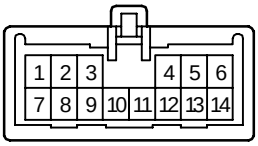

90980–10633

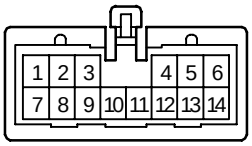

90980–10634

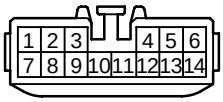

90980–10807
90980–11437

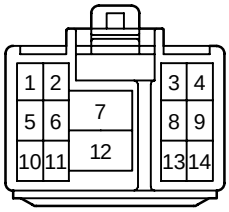

90980–10813

<FEMALE> 14P Non–waterproof Type

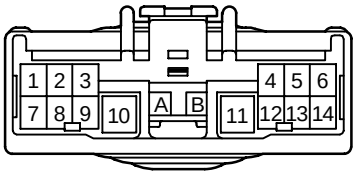

90980–10852

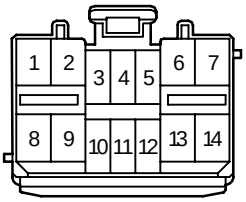

90980–11225

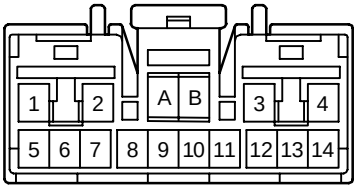

90980–11383

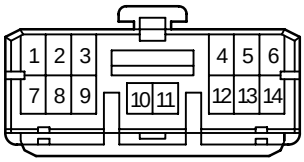

90980–11433

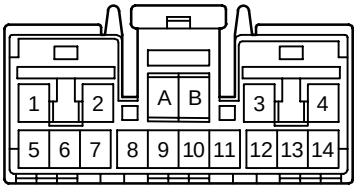

90980–11465

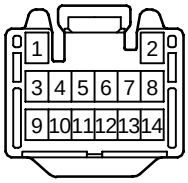

90980–11511

<FEMALE> 14P Non–waterproof Type

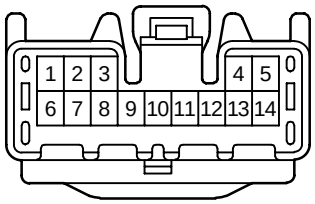

90980–11556

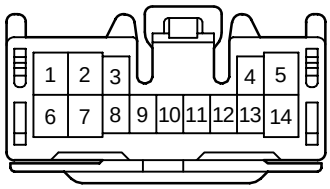

90980–11591

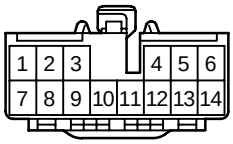

90980–11791

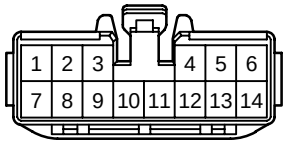

90980–11805

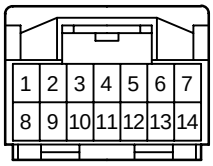

90980–11911

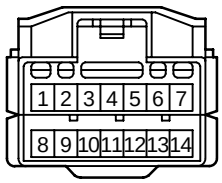

90980–11925

<FEMALE> 14P Non–waterproof Type

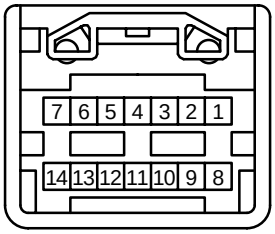 90980–12082	

<FEMALE> 15P Non–waterproof Type

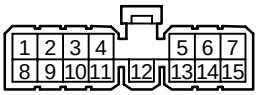

90980–10066

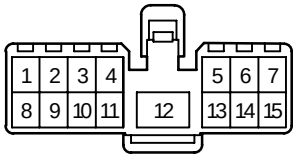

90980–10331

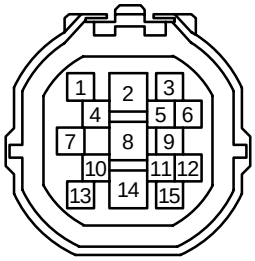

90980–10443

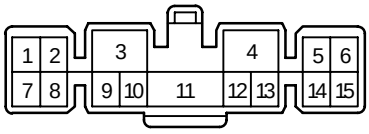

90980–10563

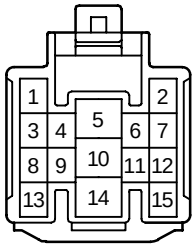

90980–10815

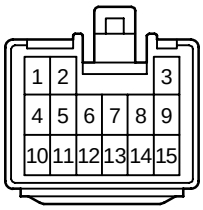

90980–10828

<FEMALE> 15P Non–waterproof Type

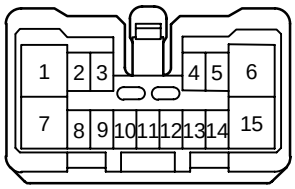

90980–11042

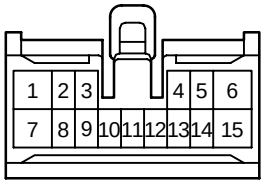

90980–11056

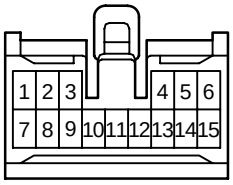

90980–11179

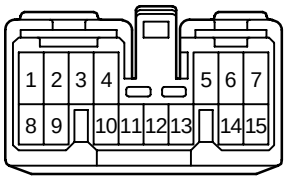

90980–11264

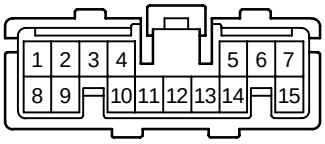

90980–11372

<FEMALE> 16P Non–waterproof Type

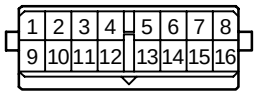

90980–10008

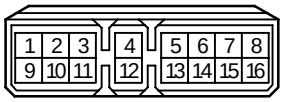

90980–10028

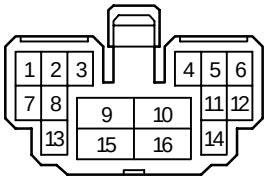

90980–10454

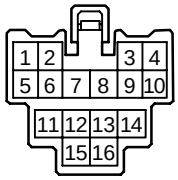

90980–10486

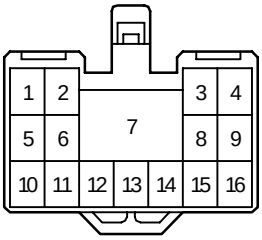

90980–10522

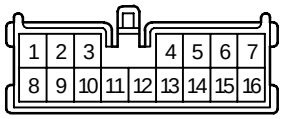

90980–10525

<FEMALE> 16P Non–waterproof Type

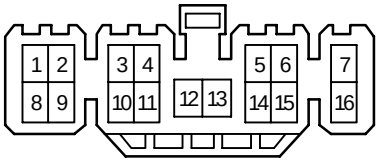

90980–10539

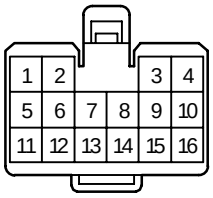

90980–10543

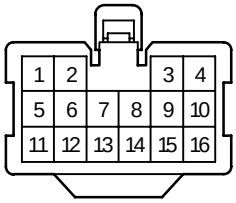

90980–10561

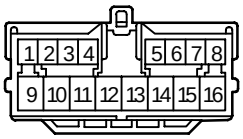

90980–10611

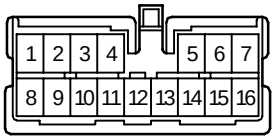

90980–10613

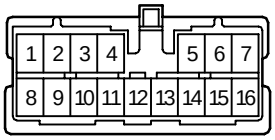

90980–10614

<FEMALE> 16P Non–waterproof Type

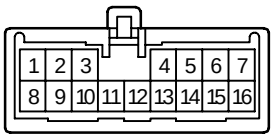

90980–10635

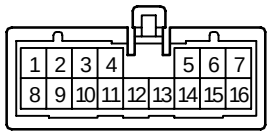

90980–10636

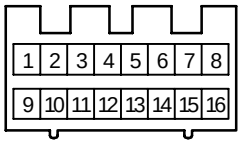

90980–10740

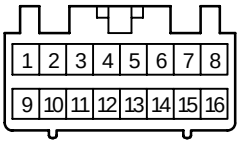

90980–10764

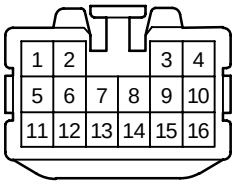

90980–10809
90980–11445

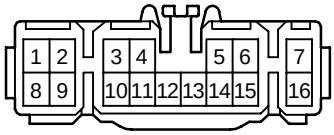

90980–10848

<FEMALE> 16P Non–waterproof Type

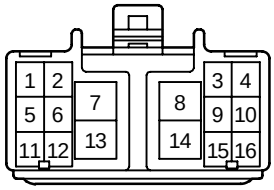

90980–10885

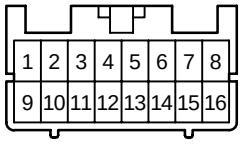

90980–11082

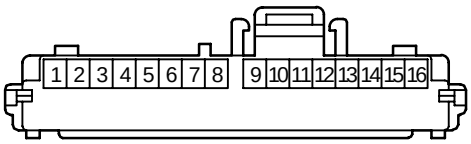

90980–11113

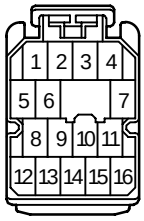

90980–11219

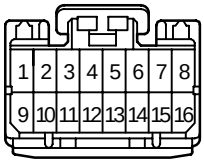

90980–11391

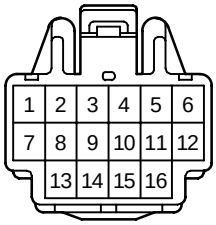

90980–11416

<FEMALE> 16P Non–waterproof Type

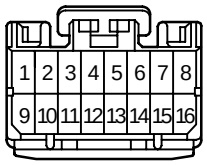

90980–11425

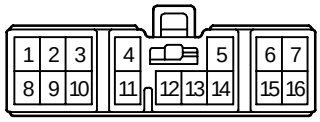

90980–11435

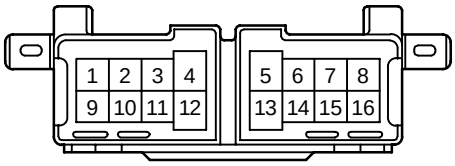

90980–11547

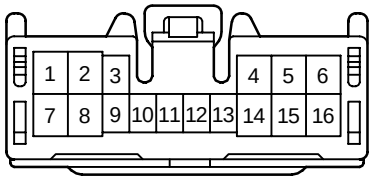

90980–11562

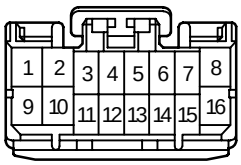

90980–11565

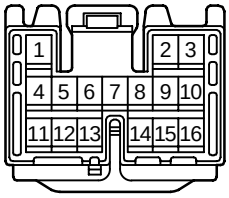

90980–11574

<FEMALE> 16P Non–waterproof Type

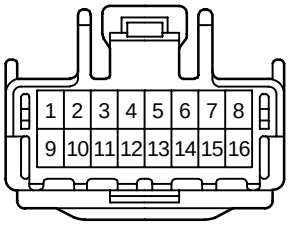

90980–11648

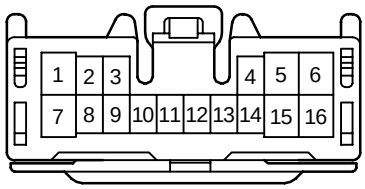

90980–11652

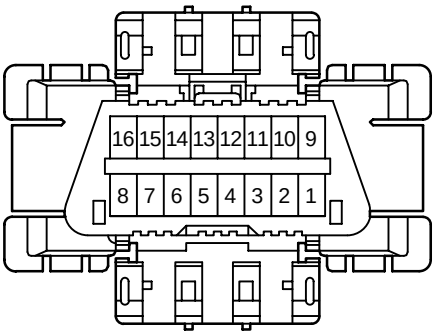

90980–11665
90980–11978

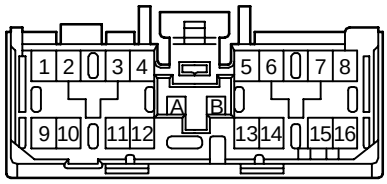

90980–11681

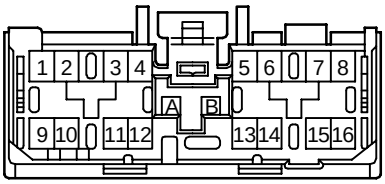

90980–11683

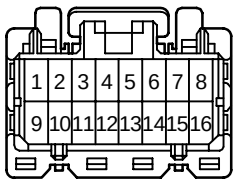

90980–11787

<FEMALE> 16P Non–waterproof Type

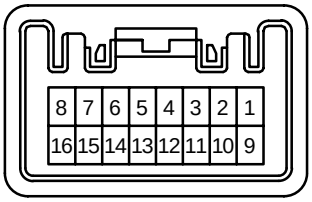

90980–12093

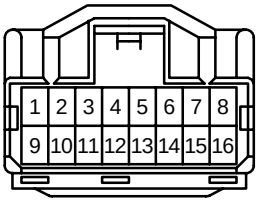

90980–12094

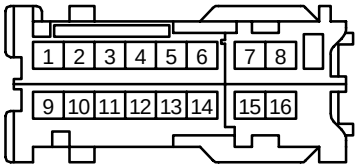

90980–12101

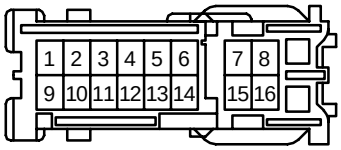

90980–12104

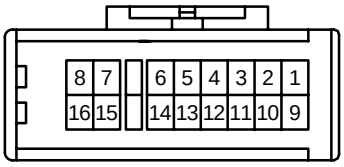

90980–12105

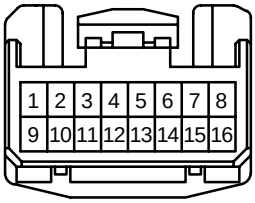

90980–12155

<FEMALE> 16P Non–waterproof Type

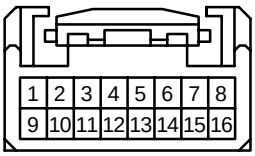 90980–12156	

<FEMALE> 17P Non–waterproof Type

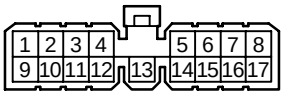 90980–10031	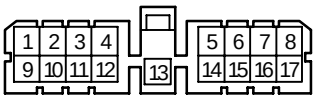 90980–10037
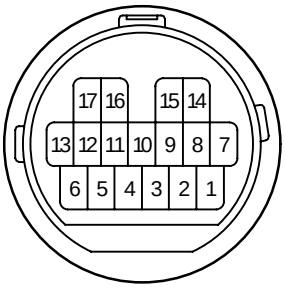 90980–10731 90980–11417 90980–11420	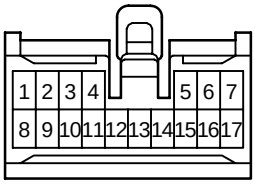 90980–11203
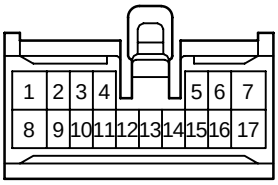 90980–11310	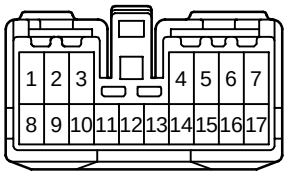 90980–11335

<FEMALE> 17P Non–waterproof Type

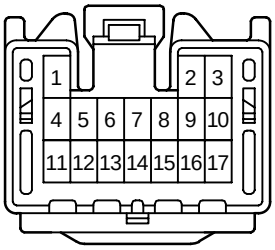

90980–11506

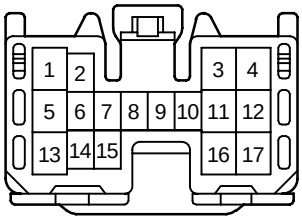

90980–11560

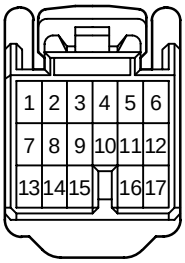

90980–11586

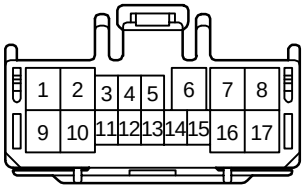

90980–11671

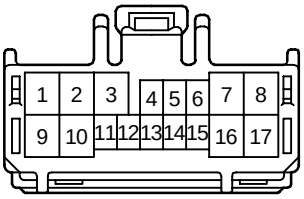

90980–11672

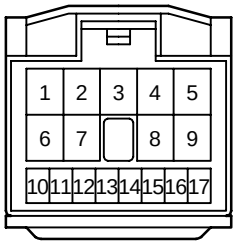

90980–11954

<FEMALE> 18P Non–waterproof Type

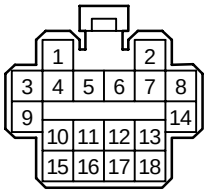

90980–10285

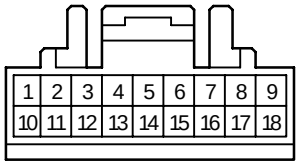

90980–10295

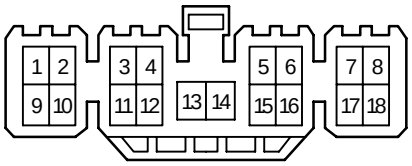

90980–10326

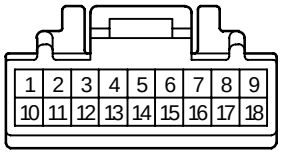

90980–10350

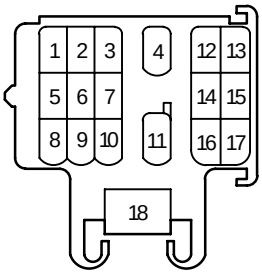

90980–10530

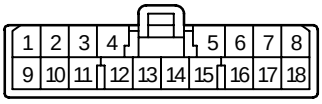

90980–10656

<FEMALE> 18P Non–waterproof Type

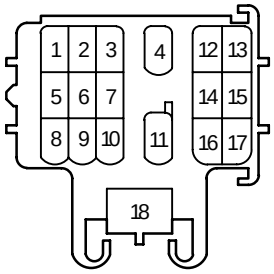

90980–10778

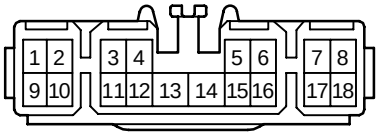

90980–10819

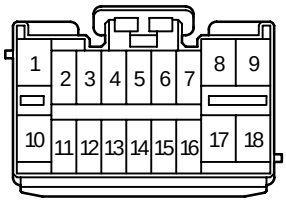

90980–11224

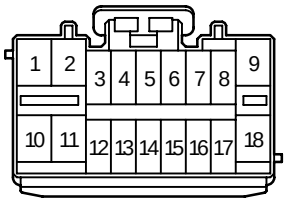

90980–11226

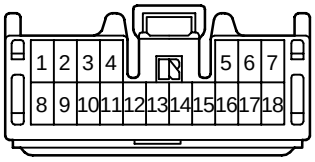

90980–11497

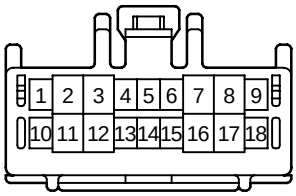

90980–11594

<FEMALE> 18P Non–waterproof Type

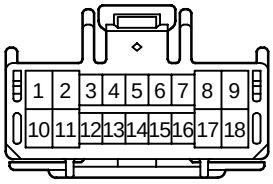

90980–11595

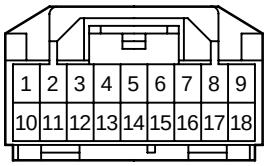

90980–11913

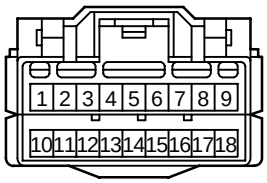

90980–11914

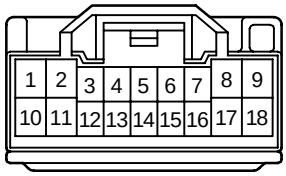

90980–11973

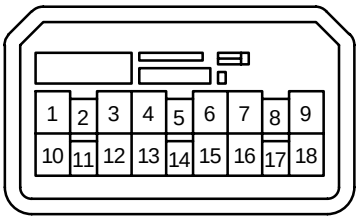

90980–12122

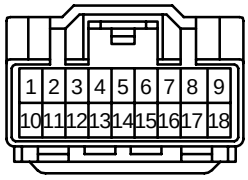

90980–12174

<FEMALE> 19P Non–waterproof Type

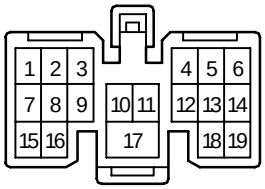

90980–10675

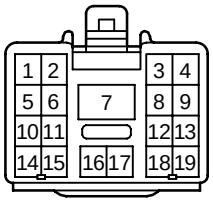

90980–10857

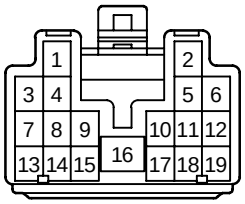

90980–10883

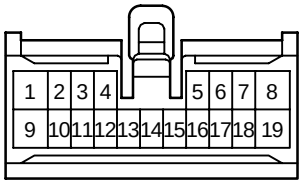

90980–11205

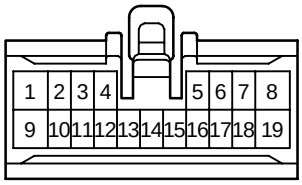

90980–11308

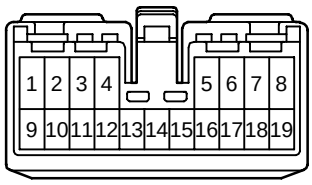

90980–11377

<FEMALE> 19P Non–waterproof Type

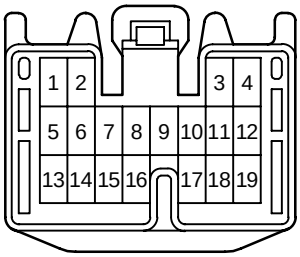 90980–11571	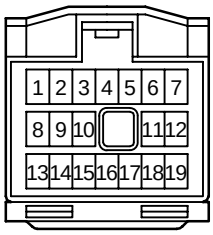 90980–11955

<FEMALE> 20P Non–waterproof Type

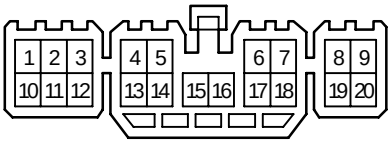

90980–10327

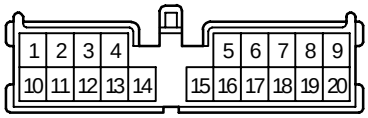

90980–10589

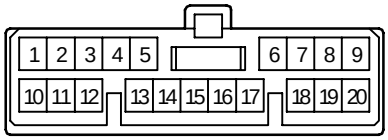

90980–10607

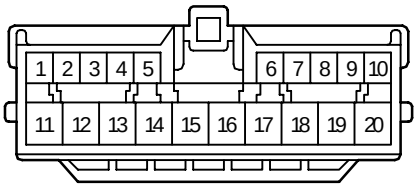

90980–10612

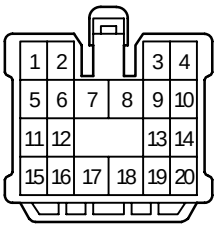

90980–10640

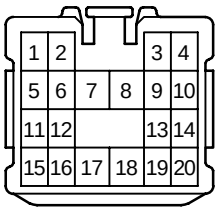

90980–10811
90980–11441

<FEMALE> 20P Non–waterproof Type

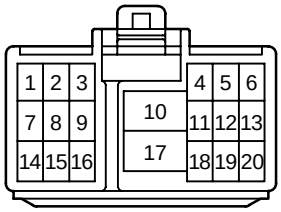

90980–10817

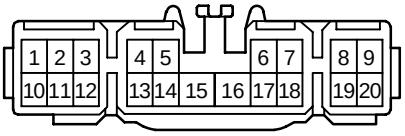

90980–10821

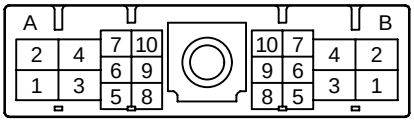

90980–10952

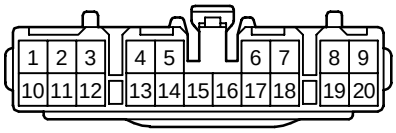

90980–11260

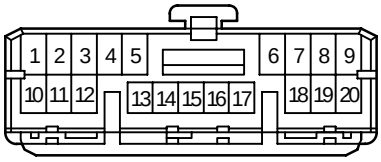

90980–11432

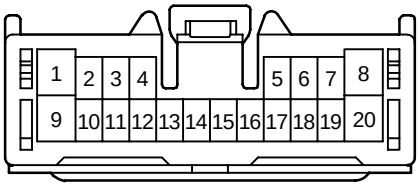

90980–11469

<FEMALE> 20P Non–waterproof Type

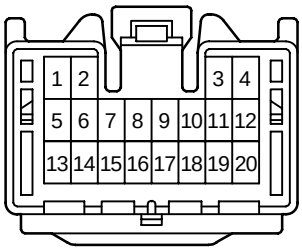

90980–11499

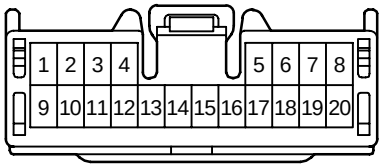

90980–11558

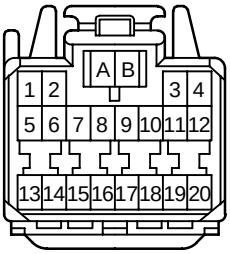

90980–11868

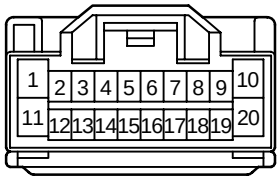

90980–11971

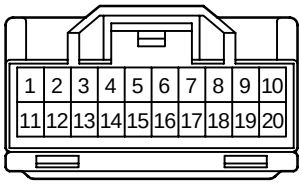

90980–11974

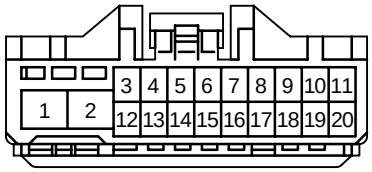

90980–12034

<FEMALE> 20P Non–waterproof Type

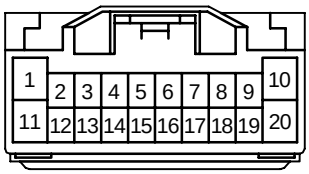

90980–12038

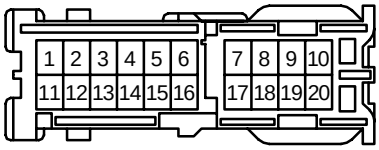

90980–12106

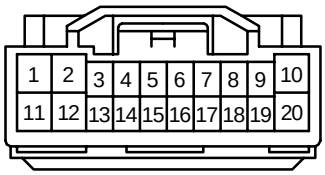

90980–12166

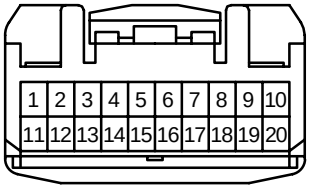

90980–12259

<FEMALE> 21P Non–waterproof Type

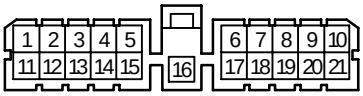

90980–10064

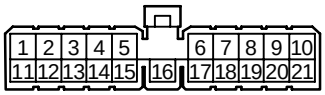

90980–10207

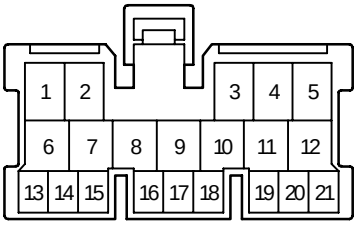

90980–10473

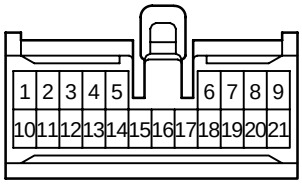

90980–11125

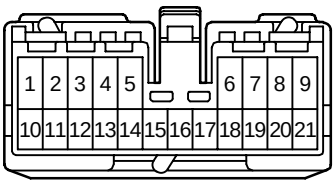

90980–11379

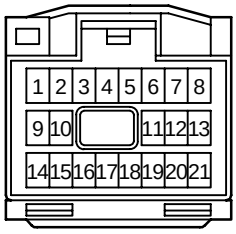

90980–11956

<FEMALE> 21P Non–waterproof Type

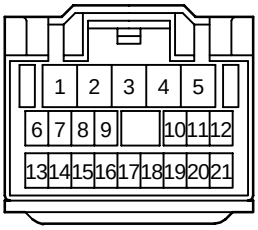 90980–11957	

<FEMALE> 22P Non–waterproof Type

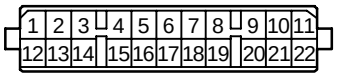

90980–10010

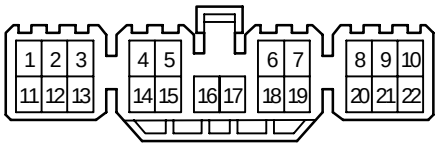

90980–10328

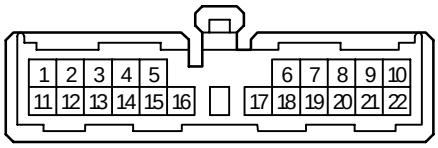

90980–10456

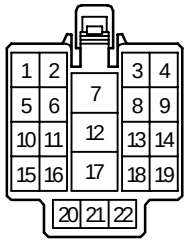

90980–10458

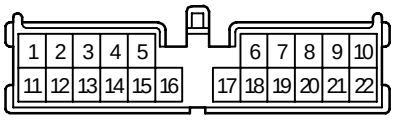

90980–10526

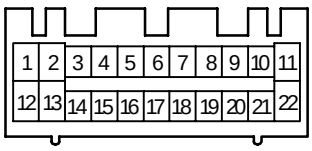

90980–10741

<FEMALE> 22P Non–waterproof Type

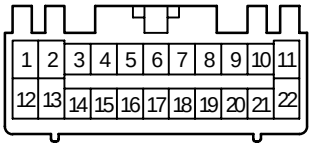

90980–10765

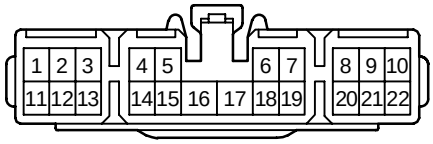

90980–10875

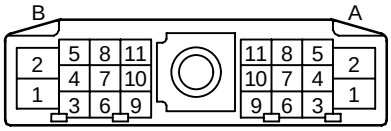

90980–10953

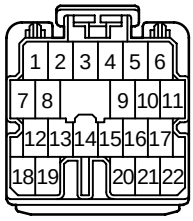

90980–11220

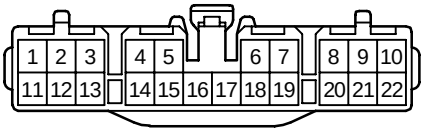

90980–11238

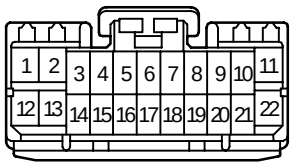

90980–11392

<FEMALE> 22P Non–waterproof Type

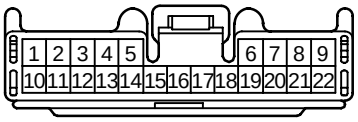

90980–11502

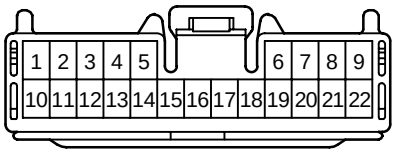

90980–11628

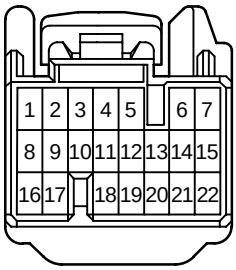

90980–11638

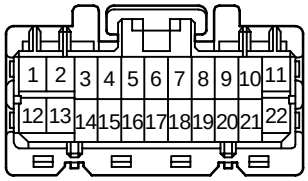

90980–11788

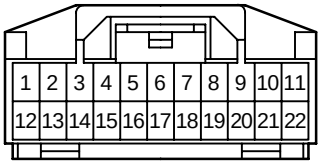

90980–11915

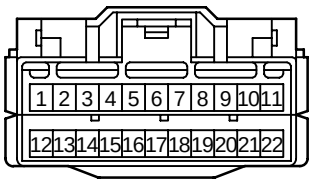

90980–11927

<FEMALE> 23P Non–waterproof Type

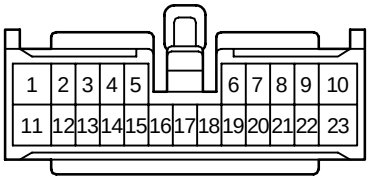

90980–10921

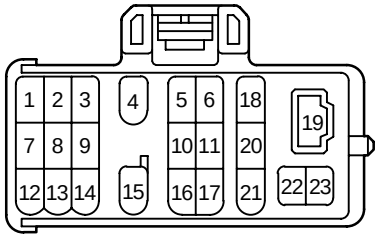

90980–11195

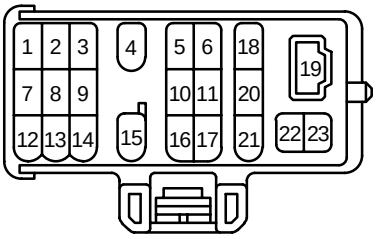

90980–11323

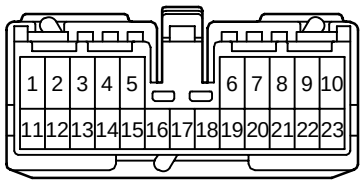

90980–11381

<FEMALE> 24P Non–waterproof Type

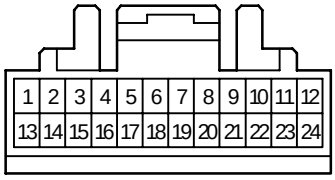

90980–10296

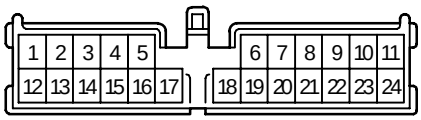

90980–10585

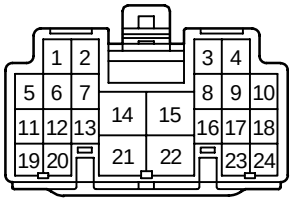

90980–10881

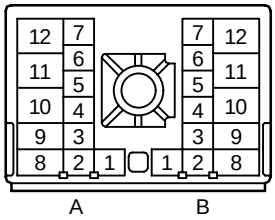

90980–10955

<FEMALE> 24P Non–waterproof Type

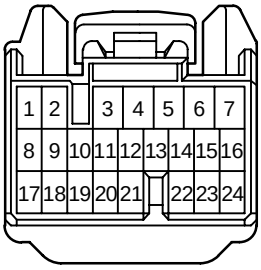

90980–11476

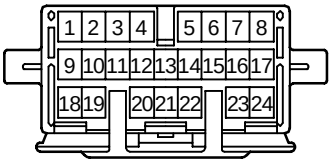

90980–11509

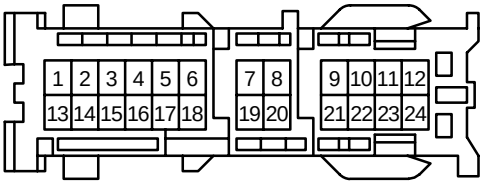

90980–12070

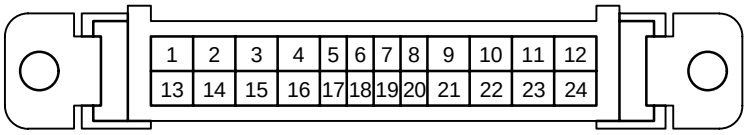

90980–12079

<FEMALE> 24P Non–waterproof Type

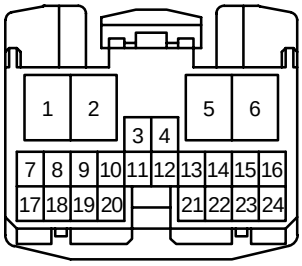

90980–12149

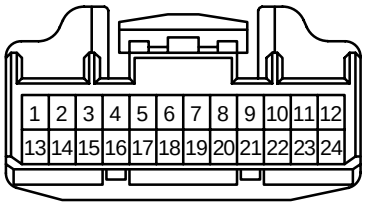

90980–12200

<FEMALE> 25P Non–waterproof Type

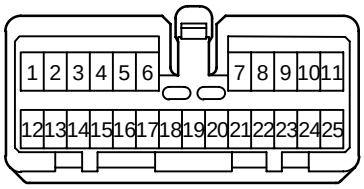

90980–11043

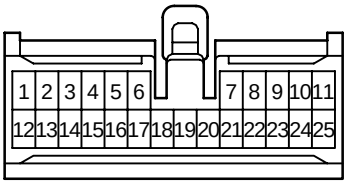

90980–11055

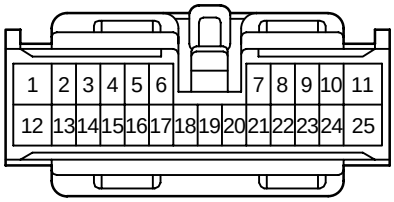

90980–11058

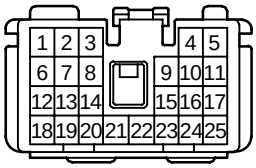

90980–11375

<FEMALE> 25P Non–waterproof Type

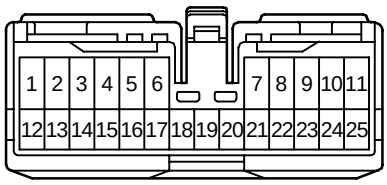

90980–11404

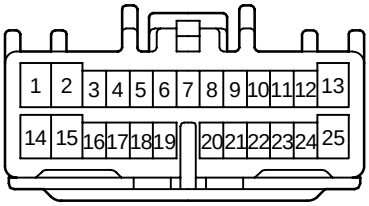

90980–11877

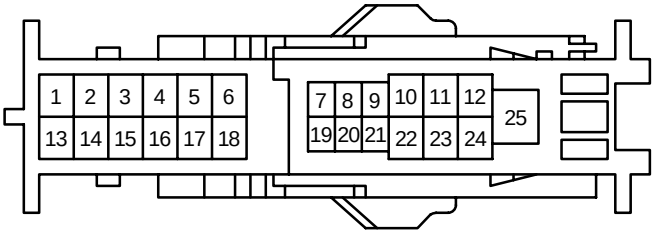

90980–12278

<FEMALE> 26P Non–waterproof Type

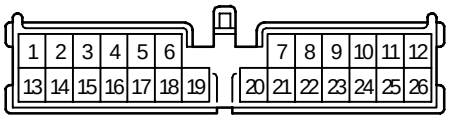

90980–10587

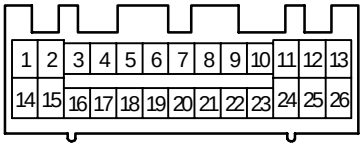

90980–10739

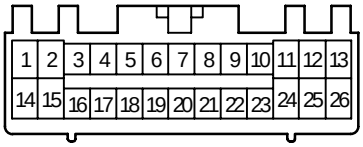

90980–10763

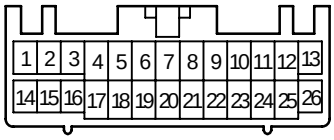

90980–10918

<FEMALE> 26P Non–waterproof Type

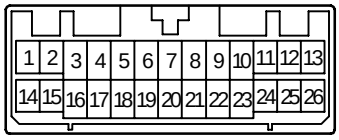

90980–10925

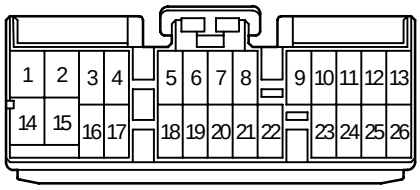

90980–11234

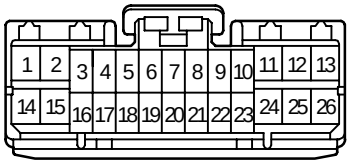

90980–11390

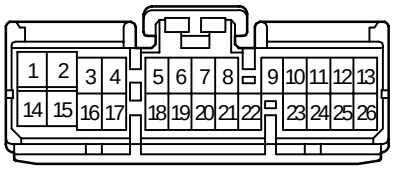

90980–11406

<FEMALE> 26P Non–waterproof Type

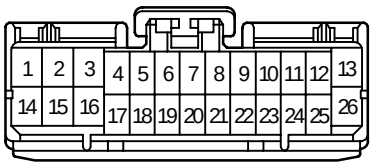

90980–11422

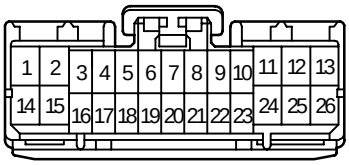

90980–11423

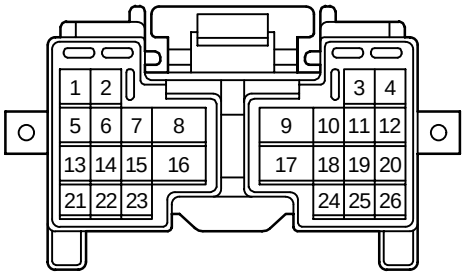

90980–11611

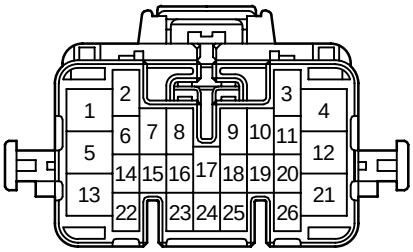

90980–11632

<FEMALE> 26P Non–waterproof Type

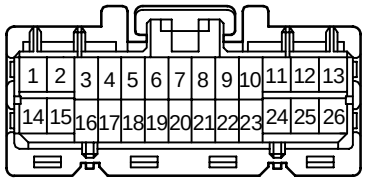

90980–11786

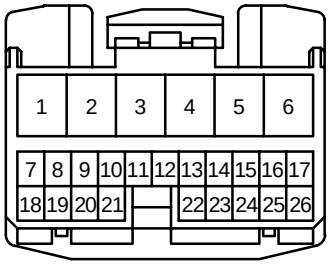

90980–12150

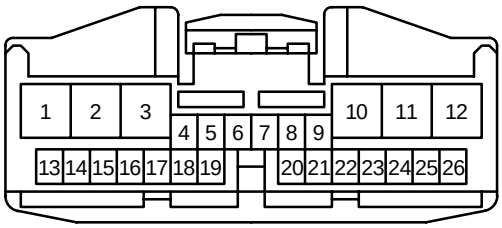

90980–12203

<FEMALE> 27P Non–waterproof Type

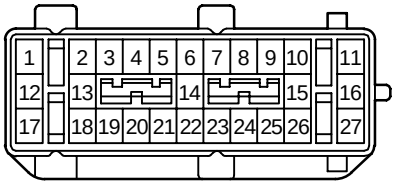

90980–11670

<FEMALE> 28P Non–waterproof Type

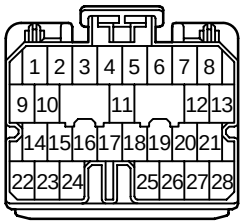

90980–11218

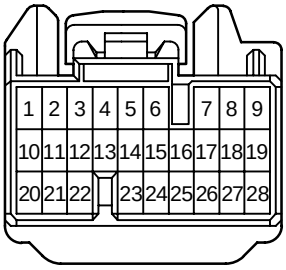

90980–11637

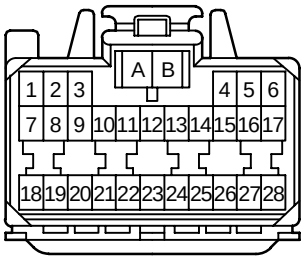

90980–11872

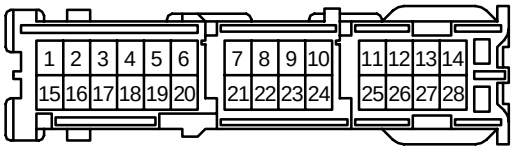

90980–12102

<FEMALE> 30P Non–waterproof Type

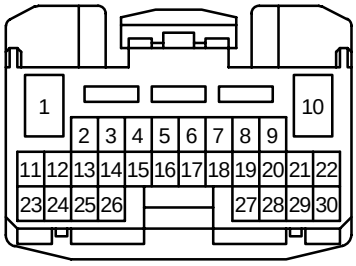

90980–12151

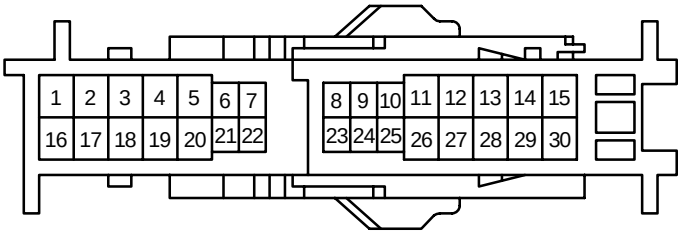

90980–12277

<FEMALE> 31P Non–waterproof Type

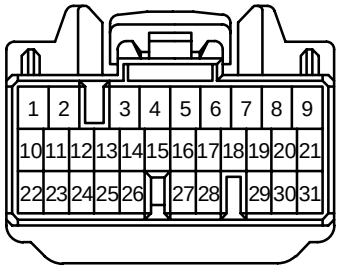

90980–11421

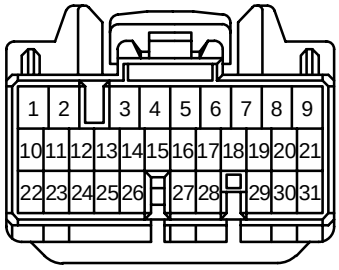

90980–11935

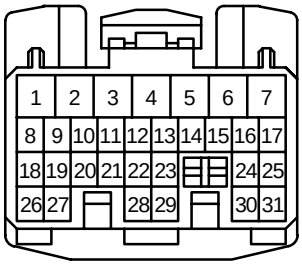

90980–12142

<FEMALE> 32P Non–waterproof Type

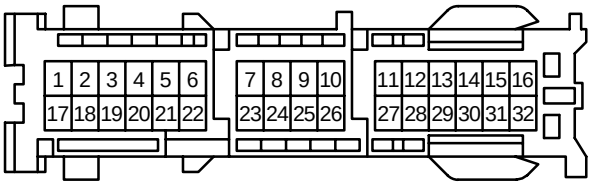

90980–12071

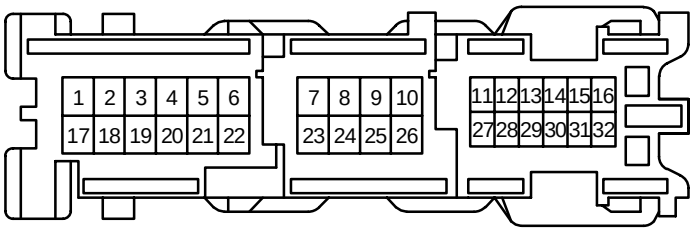

90980–12096

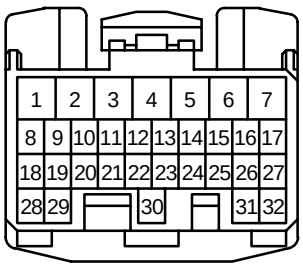

90980–12143

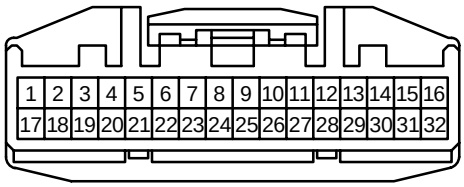

90980–12153

<FEMALE> 32P Non–waterproof Type

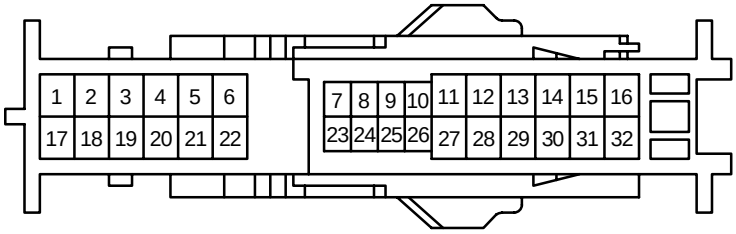

90980–12275

<FEMALE> 34P Non–waterproof Type

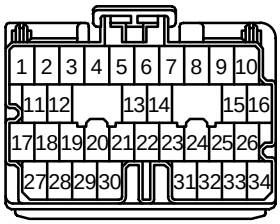

90980–11221

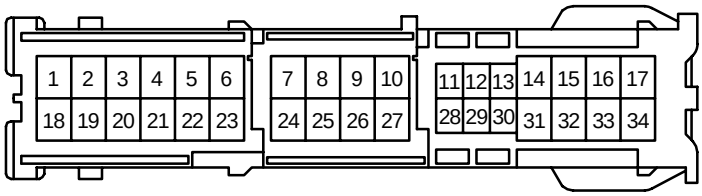

90980–12114

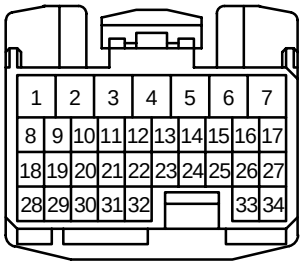

90980–12144

<FEMALE> 35P, 36P Non–waterproof Type

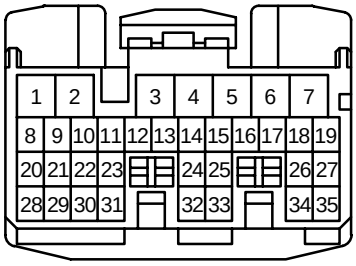

90980–12145

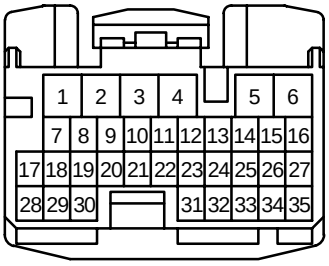

90980–12146

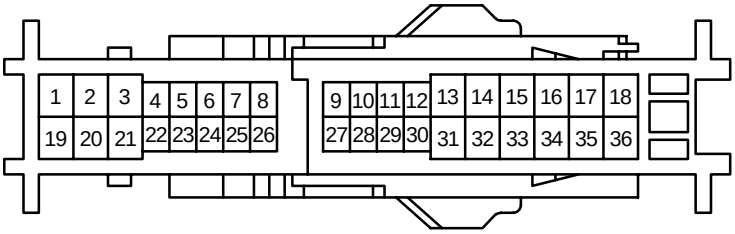

90980–12274

<FEMALE> 38P Non–waterproof Type

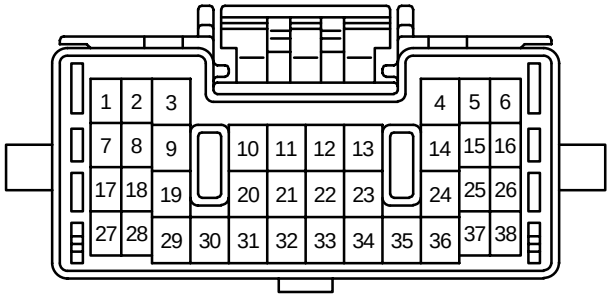

90980–11555

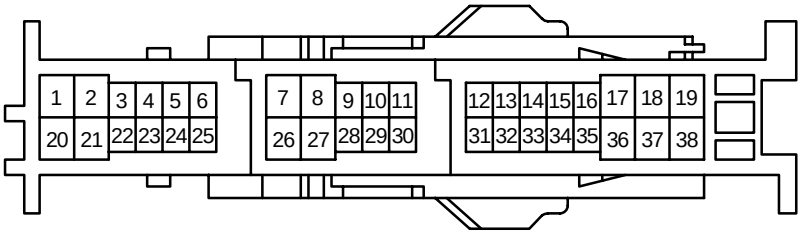

90980–12276

<FEMALE> 40P Non–waterproof Type

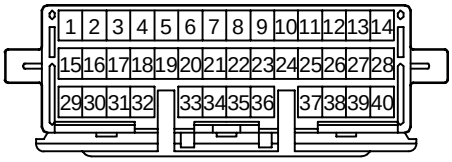

90980–11508

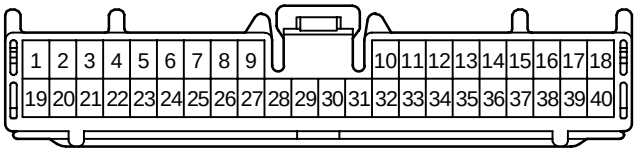

90980–11618

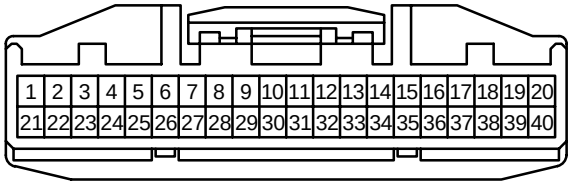

90980–12169

<FEMALE> 40P Non–waterproof Type

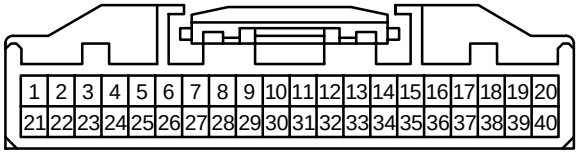

90980–12170

<FEMALE> 42P, 43P, 46P Non–waterproof Type

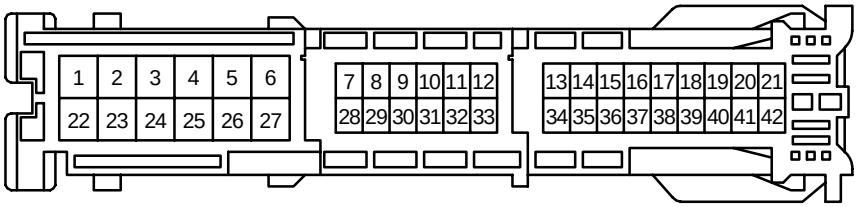

90980–12184

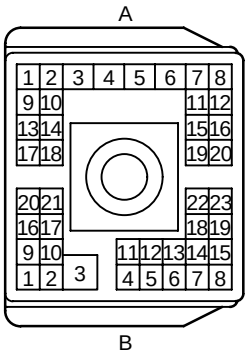

90980–11360

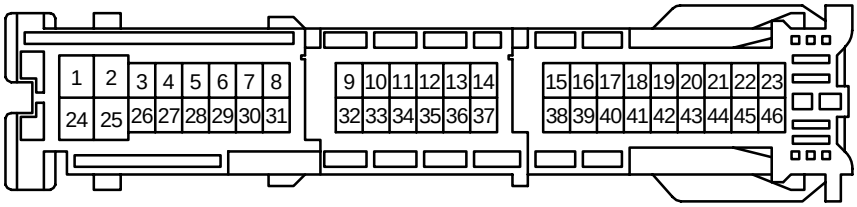

90980–12179

<FEMALE> 49P, 55P, 83P Non–waterproof Type

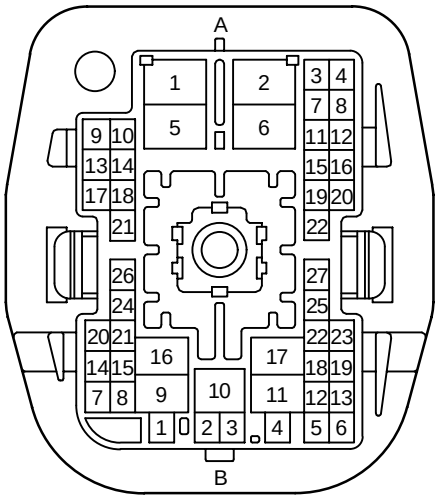

90980–11431

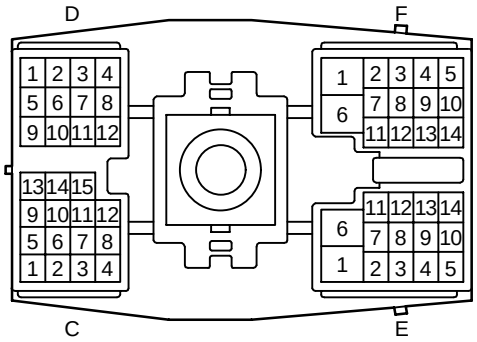

90980–11359

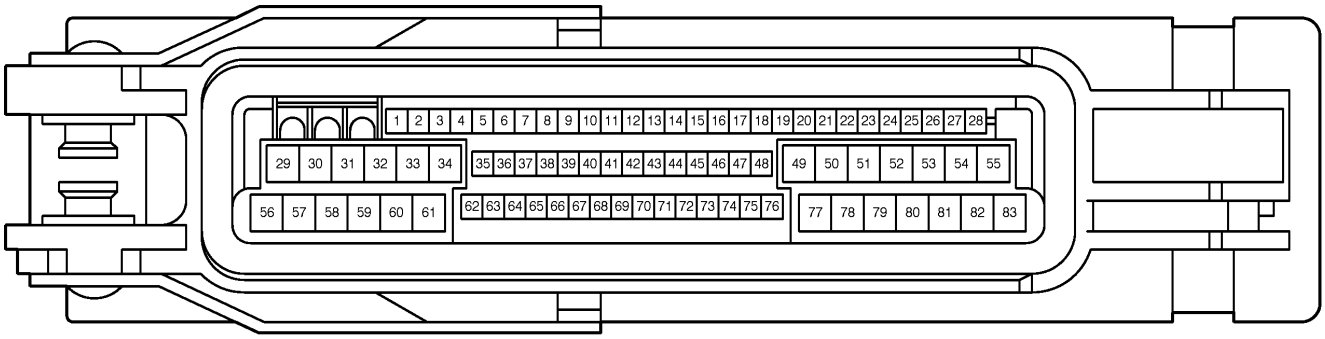

90980–11906

<FEMALE> 88P Non–waterproof Type

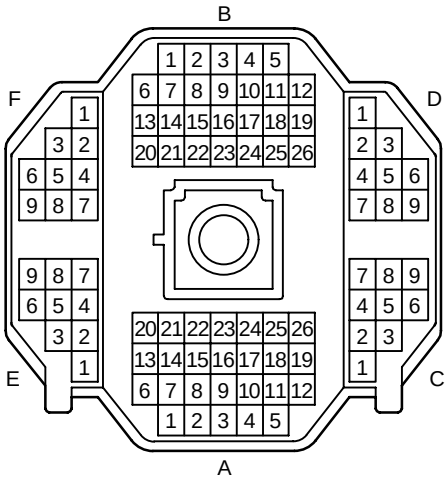

90980–10950

<FEMALE> 10P Non–waterproof Type

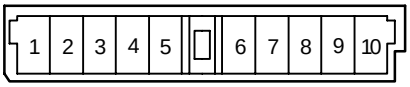 90980–10158	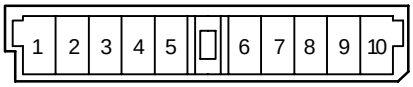 90980–10159	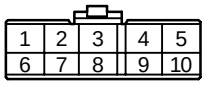 90980–10177
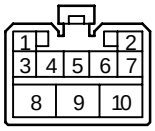 90980–10282	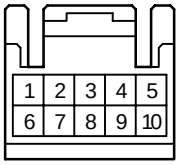 90980–10294	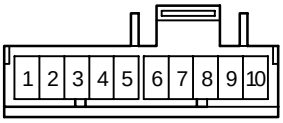 90980–10302
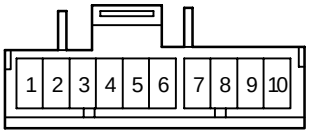 90980–10304	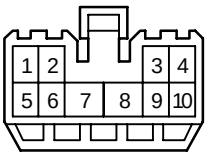 90980–10322	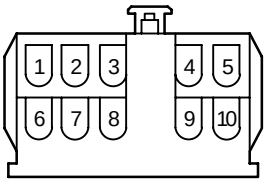 90980–10377
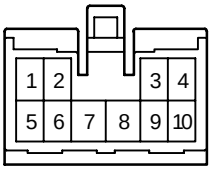 90980–10469	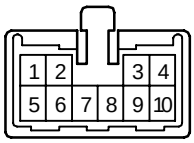 90980–10528	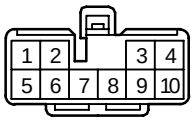 90980–10669

<FEMALE> 10P Non–waterproof Type

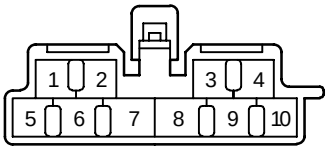 90980–10721	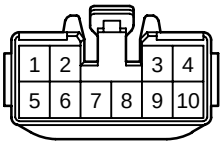 90980–10801	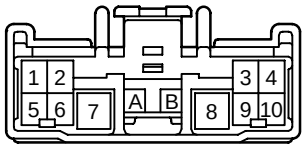 90980–10822
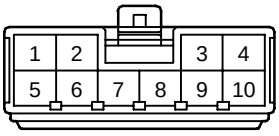 90980–10862	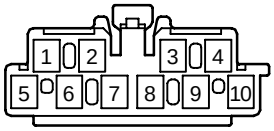 90980–10965	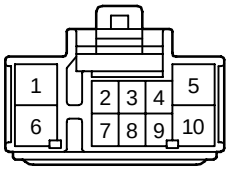 90980–10993
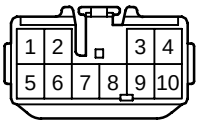 90980–10997	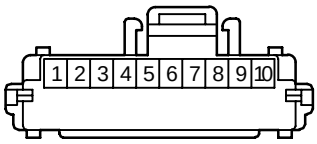 90980–11116	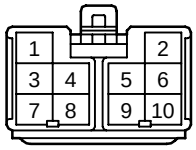 90980–11276
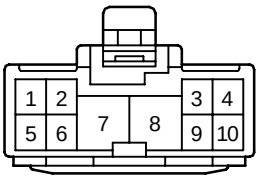 90980–11366	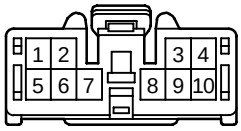 90980–11450	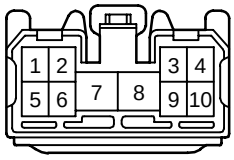 90980–11527

<FEMALE> 10P Non–waterproof Type

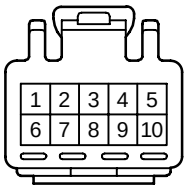 90980–11537	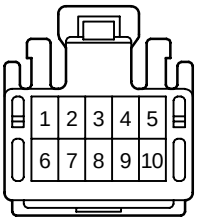 90980–11581	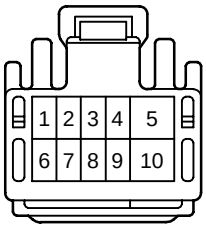 90980–11614
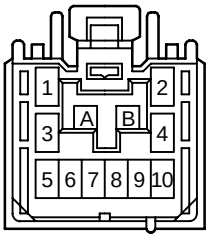 90980–11642	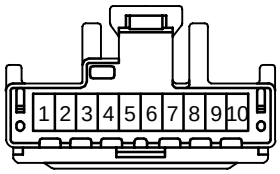 90980–11657	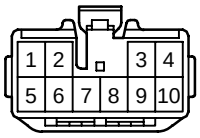 90980–11781
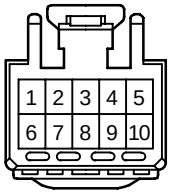 90980–11817	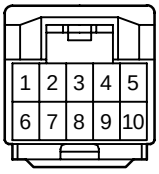 90980–11923	 90980–11924
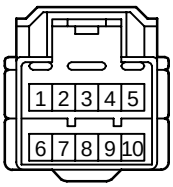 90980–11948	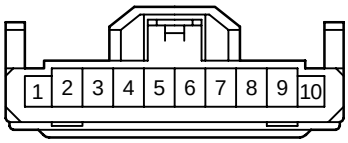 90980–12008	 90980–12135

<FEMALE> 10P Non–waterproof Type

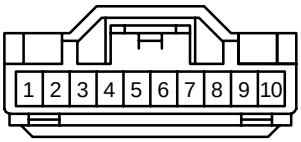 90980–12162	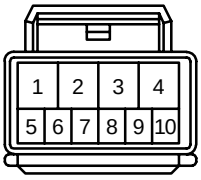 90980–12226	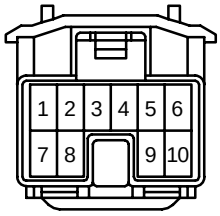 90980–12272

<FEMALE> 11P Non–waterproof Type

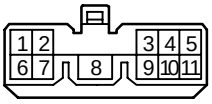 90980–10319	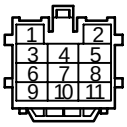 90980–10337	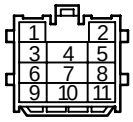 90980–10338
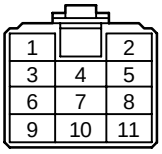 90980–10450	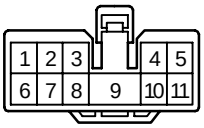 90980–10537	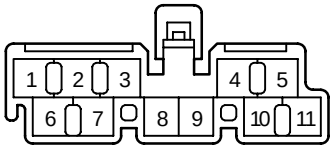 90980–10723
90980–10727	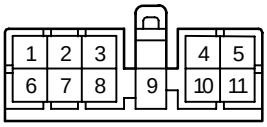 90980–10781	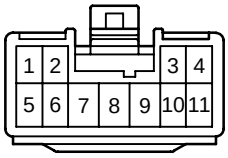 90980–10830
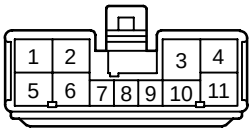 90980–10873	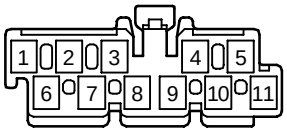 90980–10966	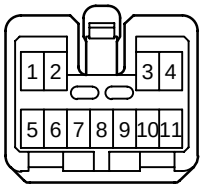 90980–11041

<FEMALE> 11P Non–waterproof Type

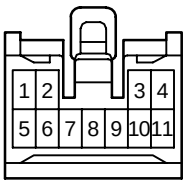 90980–11083	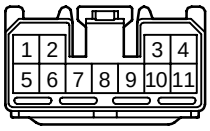 90980–11539	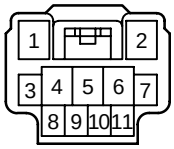 90980–12003

<FEMALE> 12P Non–waterproof Type

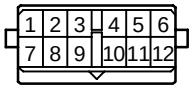 90980–10006	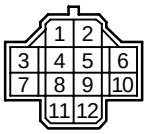 90980–10150	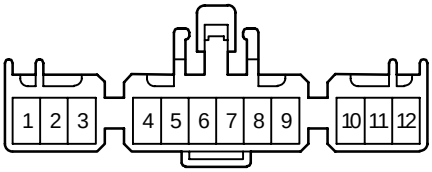 90980–10153
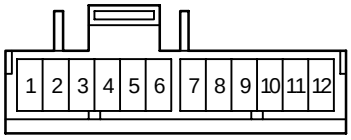 90980–10303	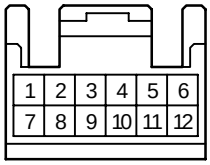 90980–10351	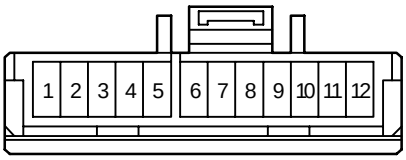 90980–10372
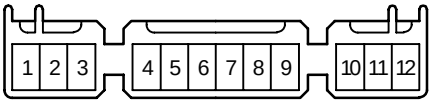 90980–10397	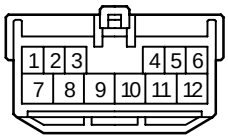 90980–10406	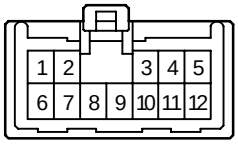 90980–10408
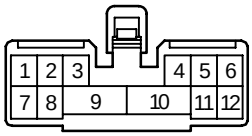 90980–10421	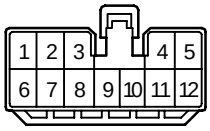 90980–10432	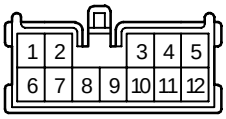 90980–10524

<FEMALE> 12P Non–waterproof Type

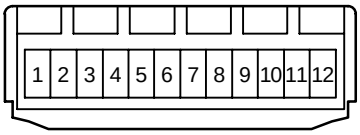 90980–10565	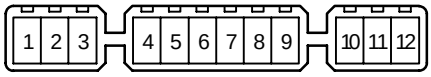 90980–10632	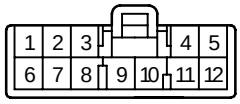 90980–10658
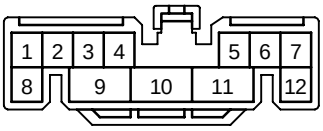 90980–10714	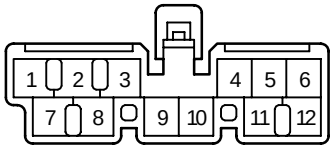 90980–10724	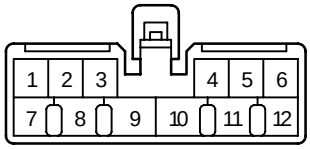 90980–10725
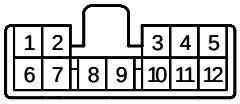 90980–10743	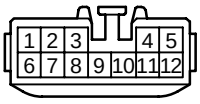 90980–10803	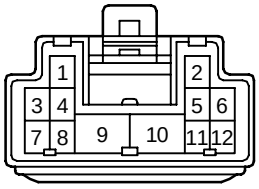 90980–10879
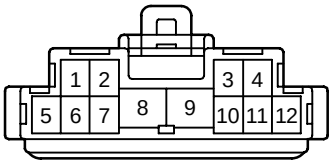 90980–10932	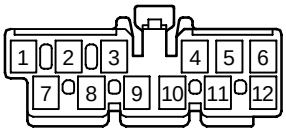 90980–10967	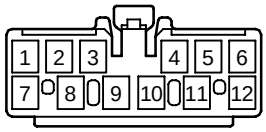 90980–10968

<FEMALE> 12P Non–waterproof Type

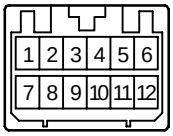 90980–10973	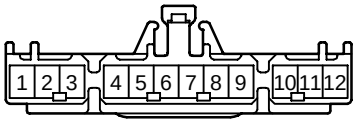 90980–11121	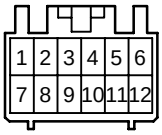 90980–11129
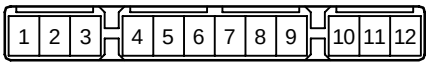 90980–11311	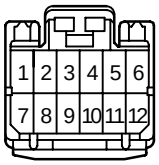 90980–11408	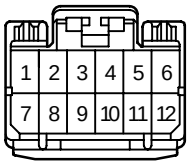 90980–11424
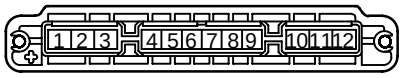 90980–11453	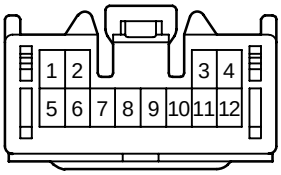 90980–11475	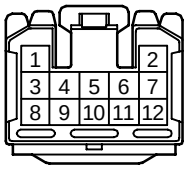 90980–11531
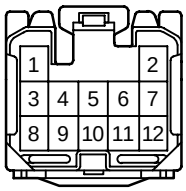 90980–11626	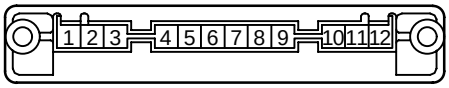 90980–11649	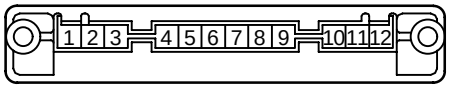 90980–11656

<FEMALE> 12P Non–waterproof Type

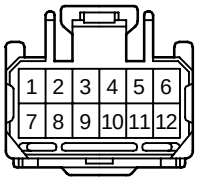 90980–11661	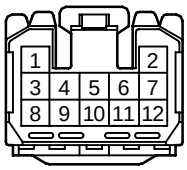 90980–11693	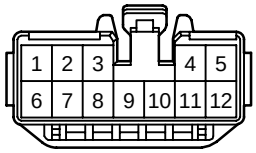 90980–11720
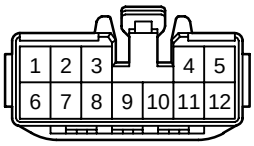 90980–11782	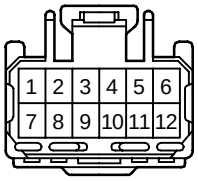 90980–11847	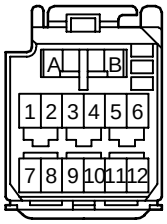 90980–11867
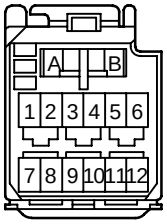 90980–11869	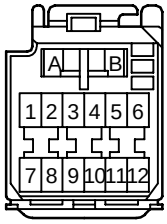 90980–11871	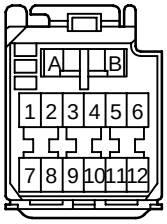 90980–11873
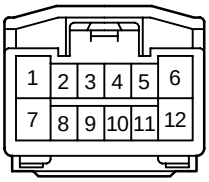 90980–11947	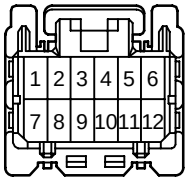 90980–12032	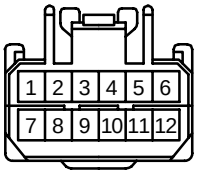 90980–12090

<FEMALE> 12P Non–waterproof Type

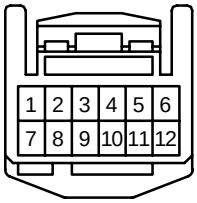 90980–12183	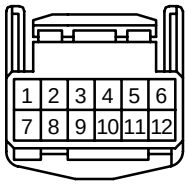 90980–12222	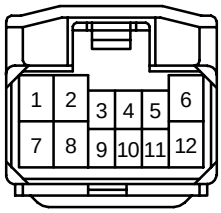 90980–12273

<FEMALE> 13P Non–waterproof Type

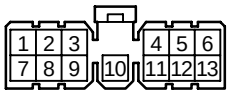 90980–10033	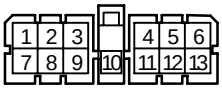 90980–10062	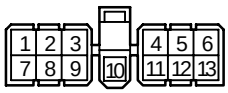 90980–10132
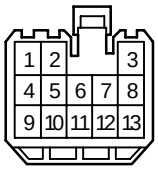 90980–10324	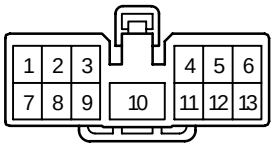 90980–10480	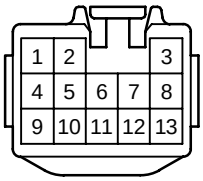 90980–10805
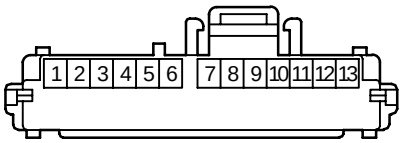 90980–11114	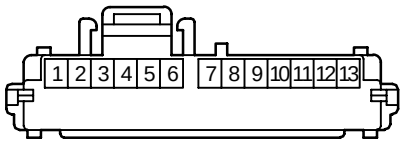 90980–11115	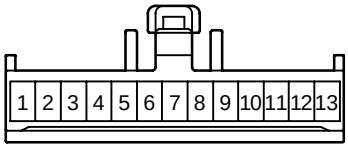 90980–11199
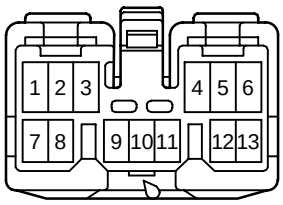 90980–11350	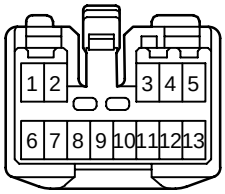 90980–11394	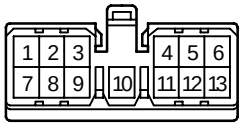 90980–11478

<FEMALE> 13P Non–waterproof Type

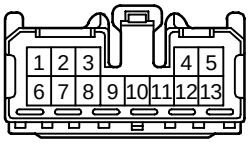 90980–11542	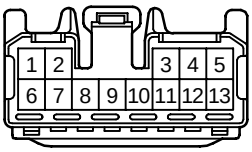 90980–11604	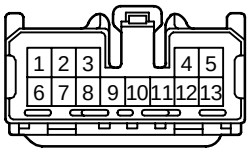 90980–11695
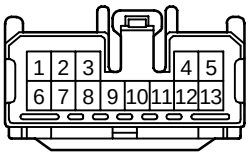 90980–11714	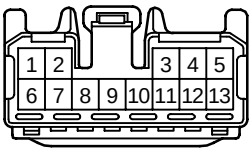 90980–11827	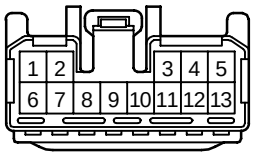 90980–11848
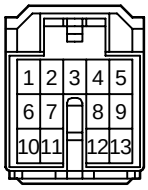 90980–11952	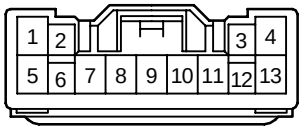 90980–12007	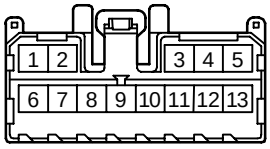 90980–12027

<FEMALE> 14P Non–waterproof Type

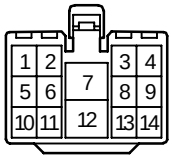

90980–10330

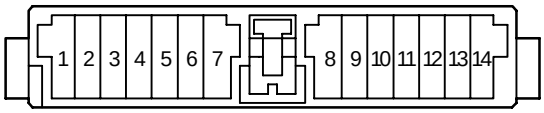

90980–10368

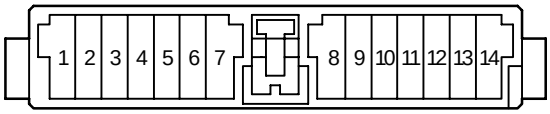

90980–10369

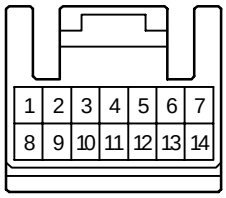

90980–10371

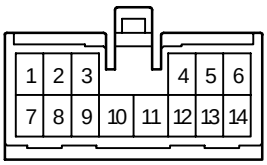

90980–10471

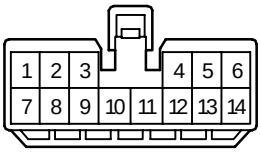

90980–10507

<FEMALE> 14P Non–waterproof Type

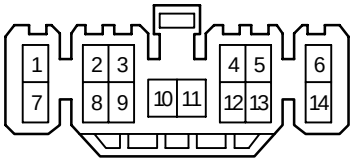

90980–10538

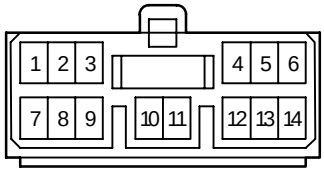

90980–10608

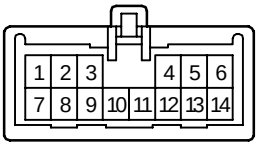

90980–10633

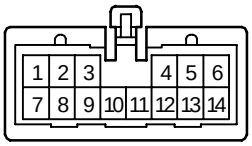

90980–10634

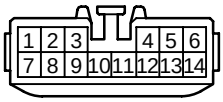

90980–10807
90980–11437

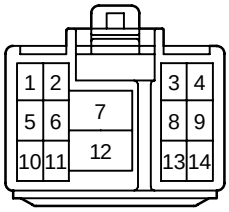

90980–10813

<FEMALE> 14P Non–waterproof Type

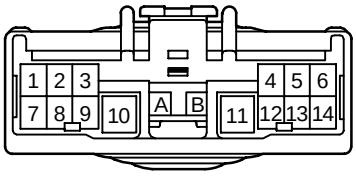

90980–10852

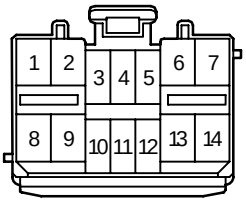

90980–11225

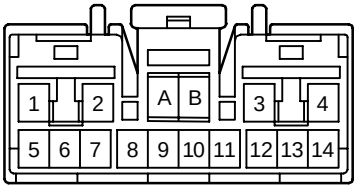

90980–11383

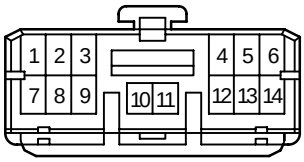

90980–11433

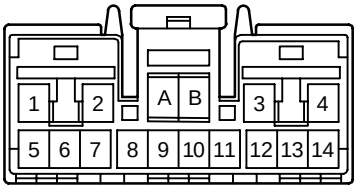

90980–11465

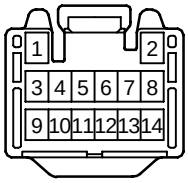

90980–11511

<FEMALE> 14P Non–waterproof Type

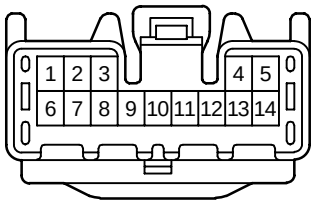

90980–11556

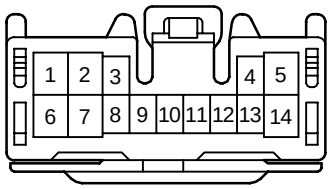

90980–11591

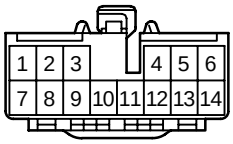

90980–11791

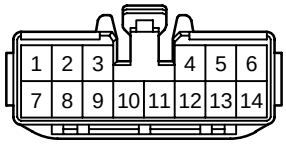

90980–11805

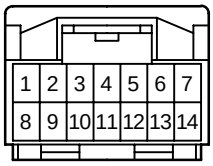

90980–11911

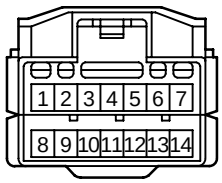

90980–11925

<FEMALE> 14P Non–waterproof Type

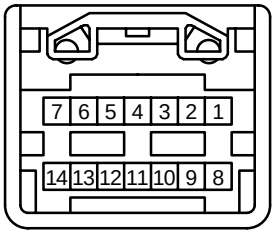 90980–12082	

<FEMALE> 15P Non–waterproof Type

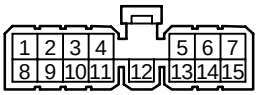

90980–10066

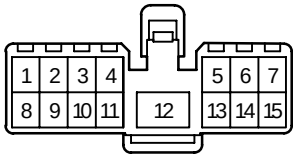

90980–10331

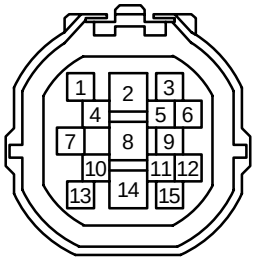

90980–10443

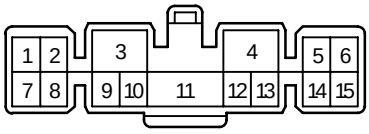

90980–10563

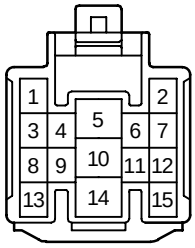

90980–10815

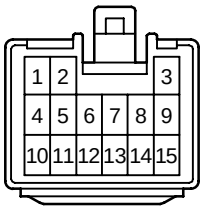

90980–10828

<FEMALE> 15P Non–waterproof Type

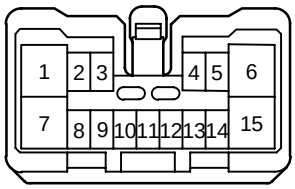

90980–11042

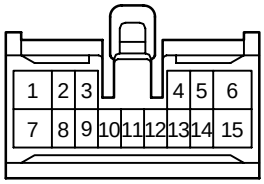

90980–11056

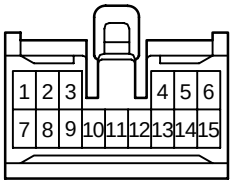

90980–11179

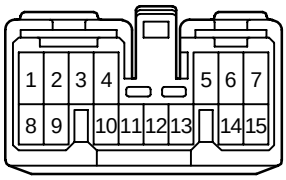

90980–11264

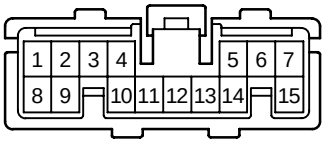

90980–11372

<FEMALE> 16P Non–waterproof Type

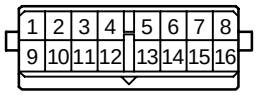

90980–10008

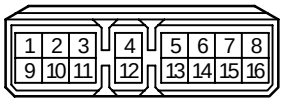

90980–10028

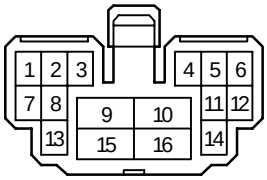

90980–10454

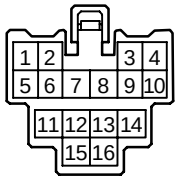

90980–10486

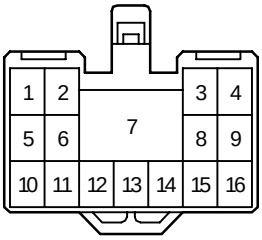

90980–10522

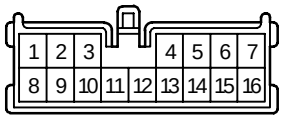

90980–10525

<FEMALE> 16P Non–waterproof Type

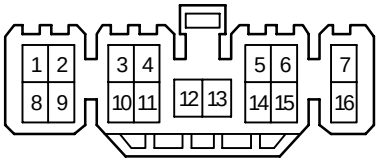

90980–10539

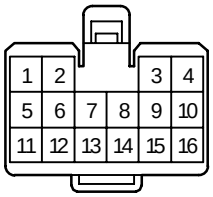

90980–10543

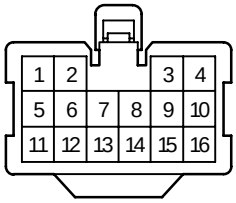

90980–10561

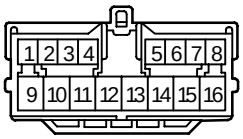

90980–10611

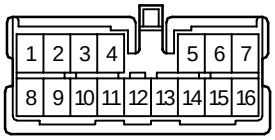

90980–10613

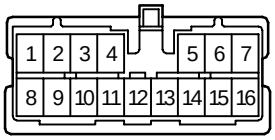

90980–10614

<FEMALE> 16P Non–waterproof Type

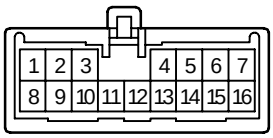

90980–10635

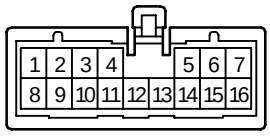

90980–10636

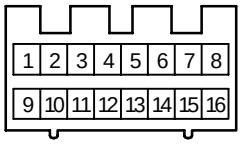

90980–10740

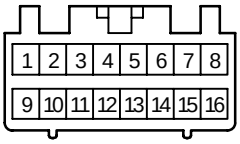

90980–10764

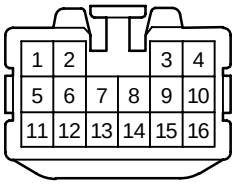

90980–10809
90980–11445

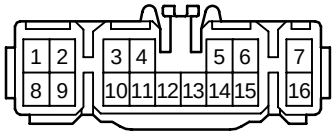

90980–10848

<FEMALE> 16P Non–waterproof Type

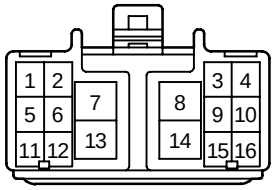

90980–10885

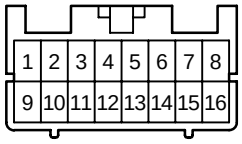

90980–11082

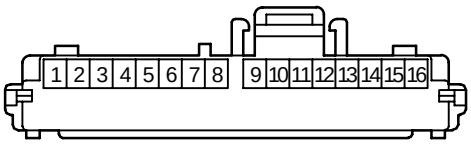

90980–11113

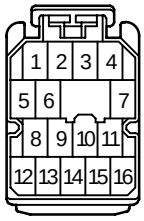

90980–11219

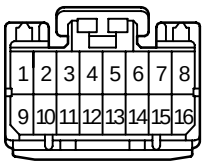

90980–11391

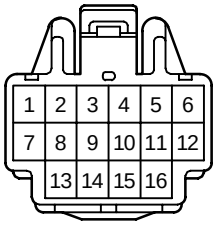

90980–11416

<FEMALE> 16P Non–waterproof Type

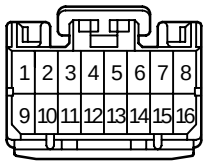

90980–11425

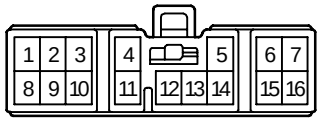

90980–11435

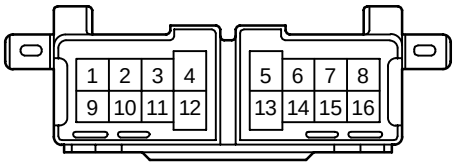

90980–11547

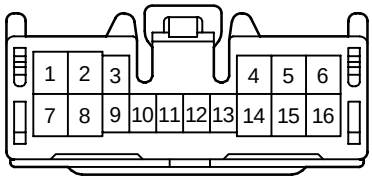

90980–11562

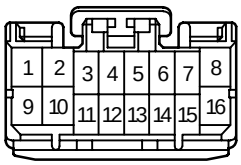

90980–11565

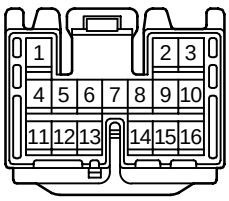

90980–11574

<FEMALE> 16P Non–waterproof Type

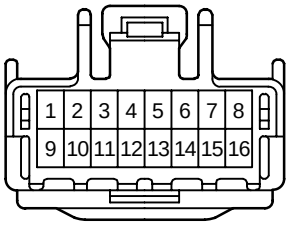

90980–11648

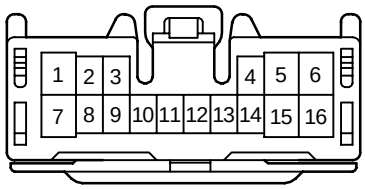

90980–11652

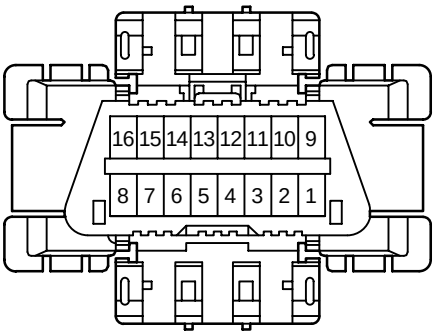

90980–11665
90980–11978

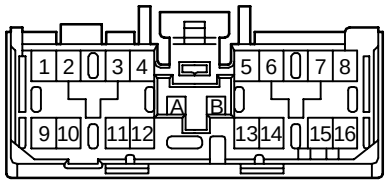

90980–11681

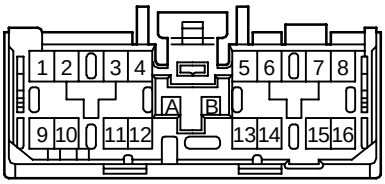

90980–11683

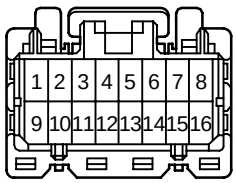

90980–11787

<FEMALE> 16P Non–waterproof Type

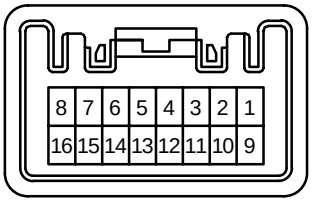

90980–12093

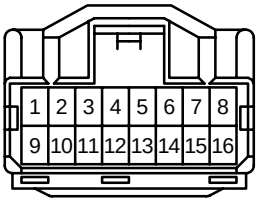

90980–12094

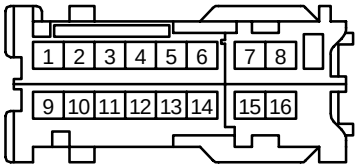

90980–12101

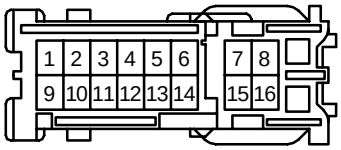

90980–12104

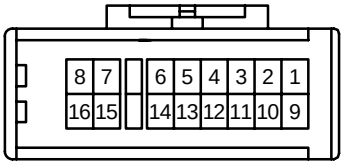

90980–12105

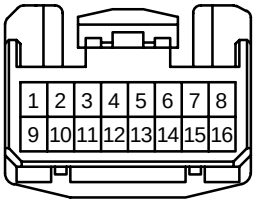

90980–12155

<FEMALE> 16P Non–waterproof Type

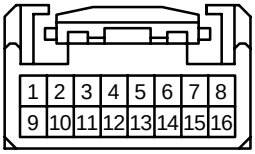 90980–12156	

<FEMALE> 17P Non–waterproof Type

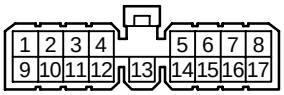

90980–10031

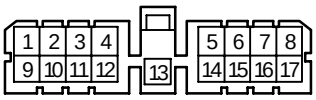

90980–10037

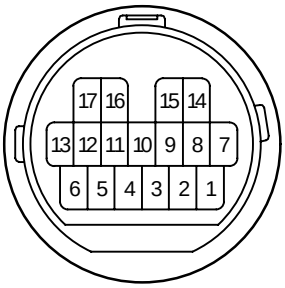

90980–10731
90980–11417
90980–11420

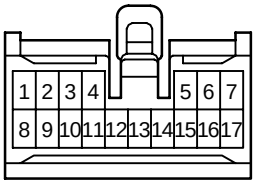

90980–11203

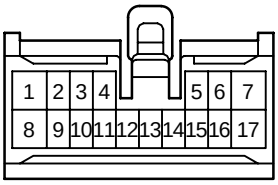

90980–11310

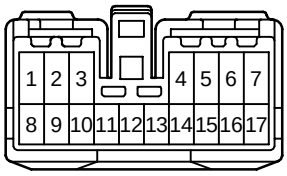

90980–11335

<FEMALE> 17P Non–waterproof Type

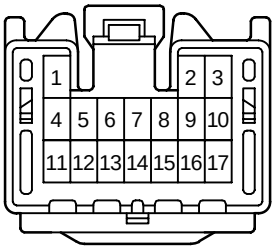

90980–11506

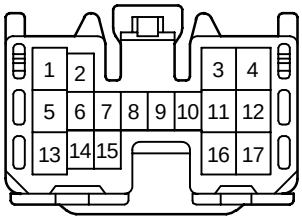

90980–11560

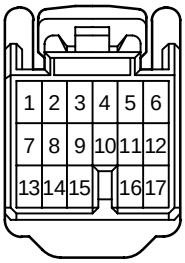

90980–11586

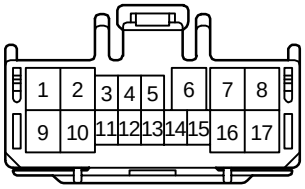

90980–11671

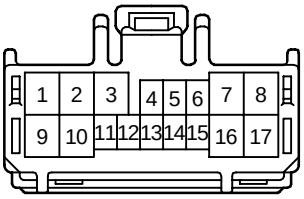

90980–11672

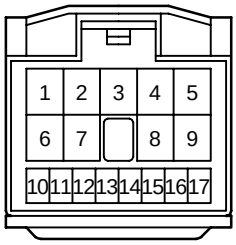

90980–11954

<FEMALE> 18P Non–waterproof Type

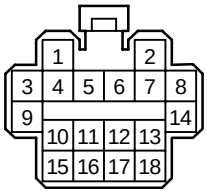

90980–10285

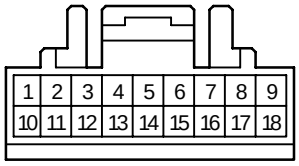

90980–10295

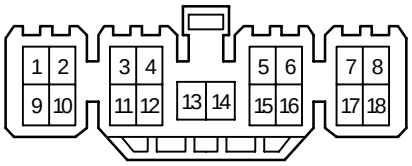

90980–10326

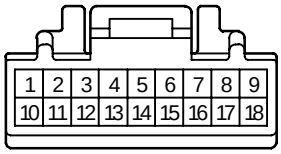

90980–10350

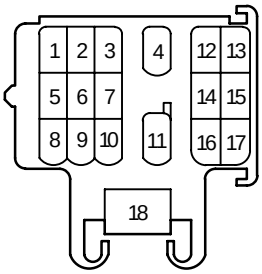

90980–10530

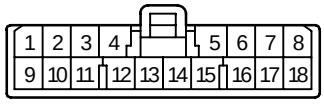

90980–10656

<FEMALE> 18P Non–waterproof Type

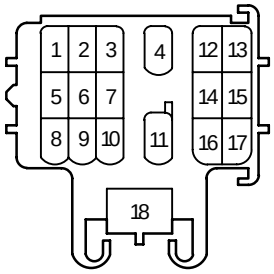

90980–10778

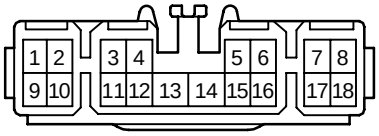

90980–10819

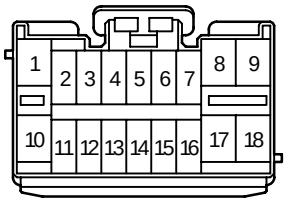

90980–11224

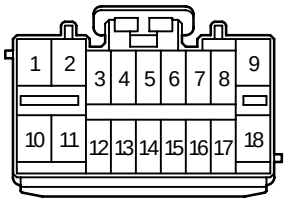

90980–11226

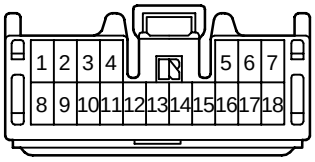

90980–11497

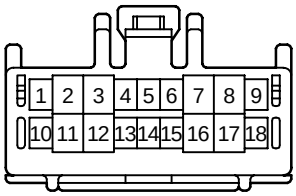

90980–11594

<FEMALE> 18P Non–waterproof Type

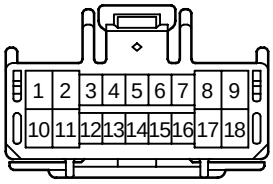

90980–11595

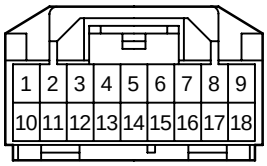

90980–11913

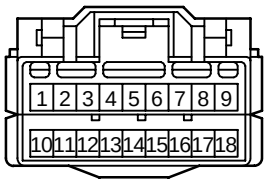

90980–11914

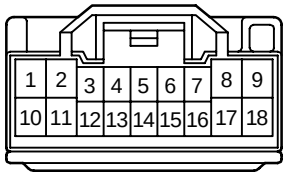

90980–11973

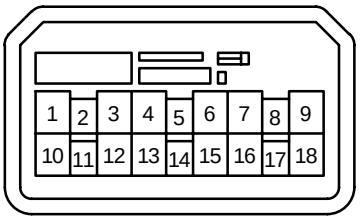

90980–12122

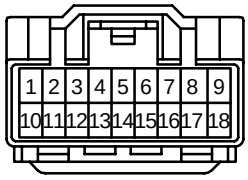

90980–12174

<FEMALE> 19P Non–waterproof Type

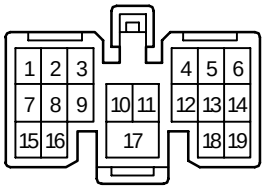

90980–10675

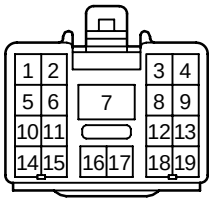

90980–10857

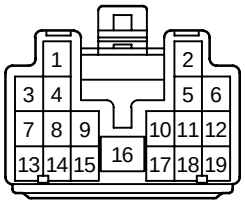

90980–10883

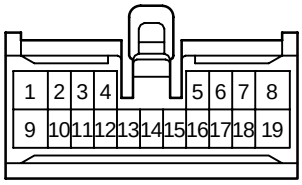

90980–11205

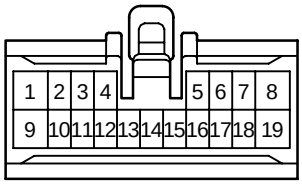

90980–11308

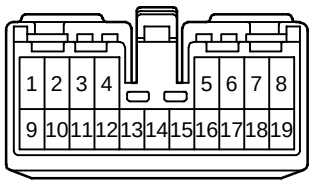

90980–11377

<FEMALE> 19P Non–waterproof Type

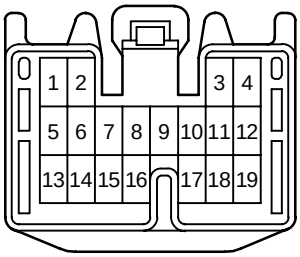 90980–11571	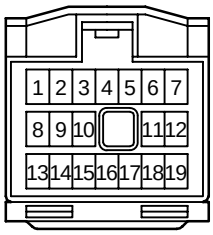 90980–11955

<FEMALE> 20P Non–waterproof Type

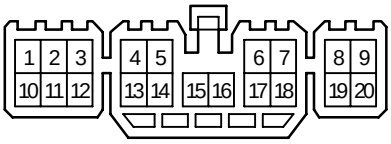

90980–10327

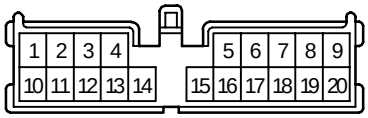

90980–10589

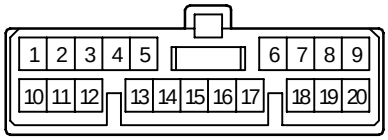

90980–10607

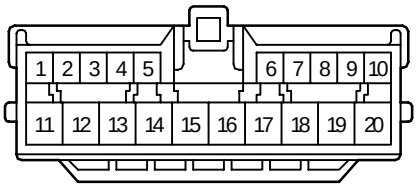

90980–10612

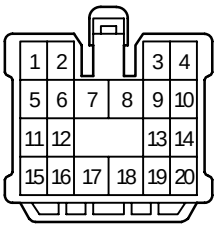

90980–10640

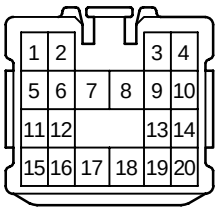

90980–10811
90980–11441

<FEMALE> 20P Non–waterproof Type

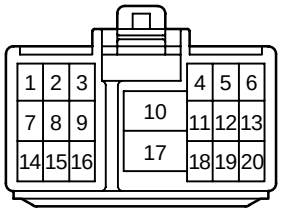

90980–10817

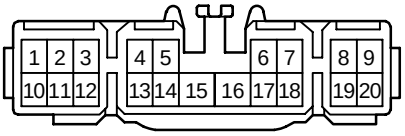

90980–10821

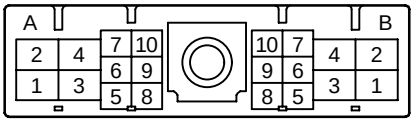

90980–10952

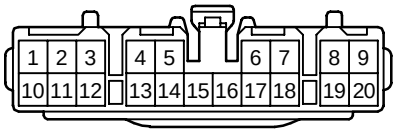

90980–11260

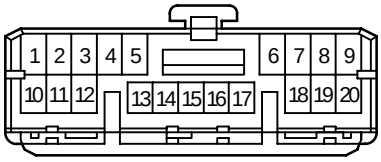

90980–11432

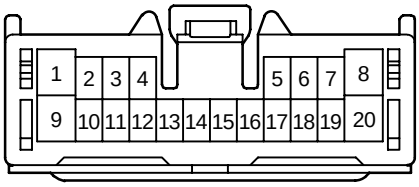

90980–11469

<FEMALE> 20P Non–waterproof Type

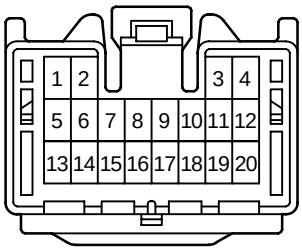

90980–11499

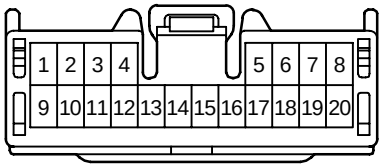

90980–11558

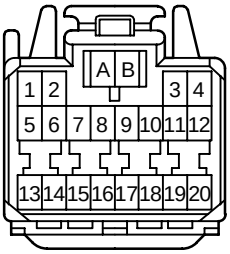

90980–11868

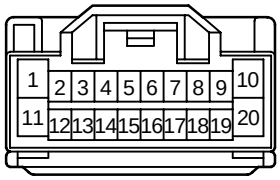

90980–11971

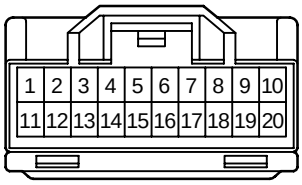

90980–11974

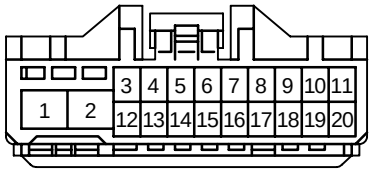

90980–12034

<FEMALE> 20P Non–waterproof Type

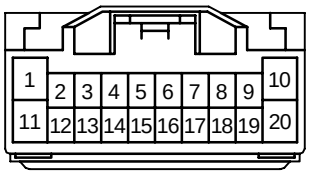

90980–12038

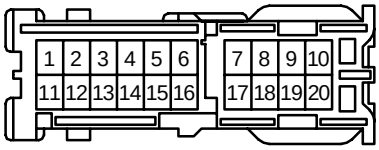

90980–12106

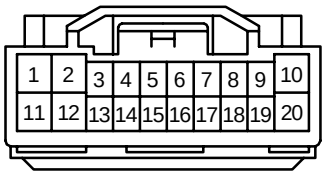

90980–12166

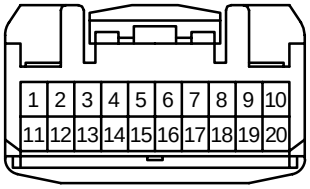

90980–12259

<FEMALE> 21P Non–waterproof Type

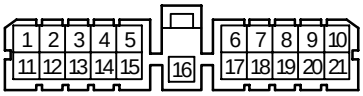

90980–10064

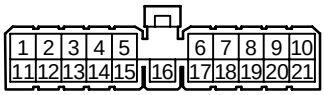

90980–10207

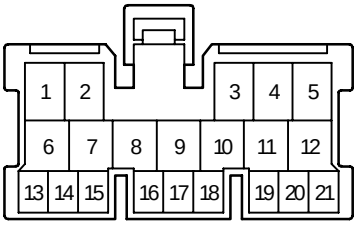

90980–10473

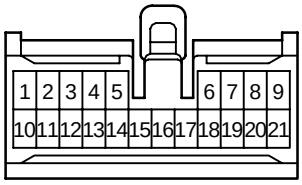

90980–11125

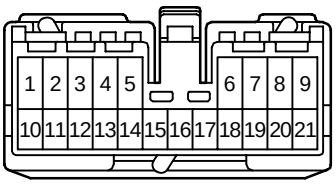

90980–11379

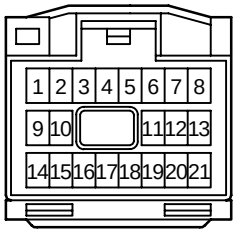

90980–11956

<FEMALE> 21P Non–waterproof Type

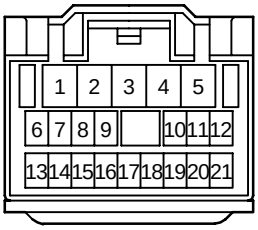 90980–11957	

<FEMALE> 22P Non–waterproof Type

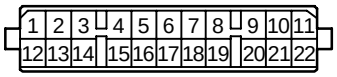

90980–10010

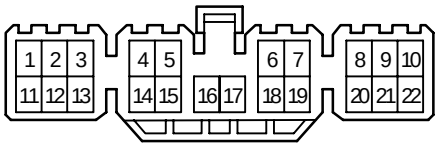

90980–10328

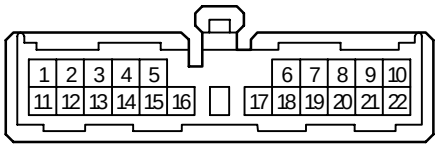

90980–10456

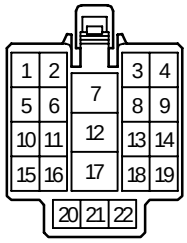

90980–10458

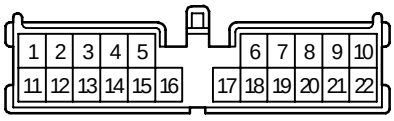

90980–10526

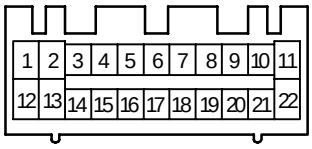

90980–10741

<FEMALE> 22P Non–waterproof Type

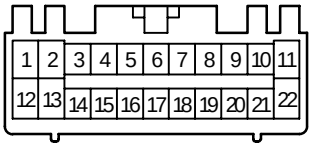

90980–10765

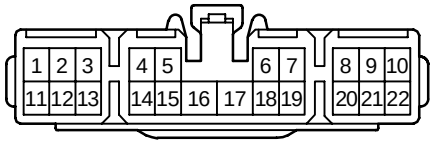

90980–10875

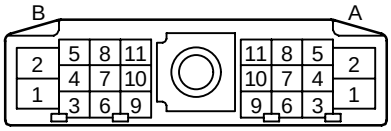

90980–10953

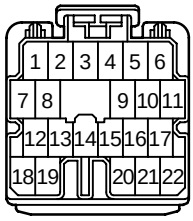

90980–11220

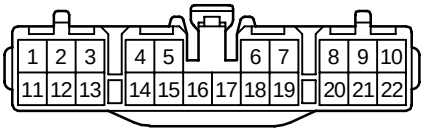

90980–11238

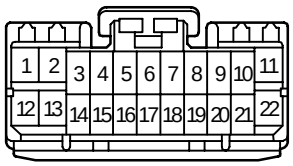

90980–11392

<FEMALE> 22P Non–waterproof Type

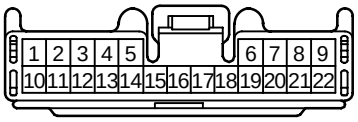

90980–11502

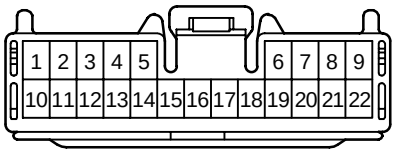

90980–11628

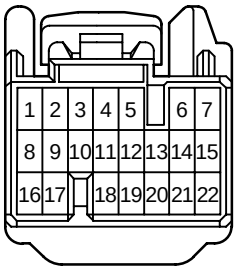

90980–11638

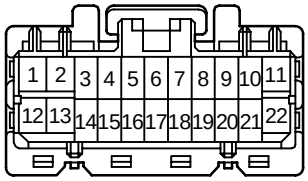

90980–11788

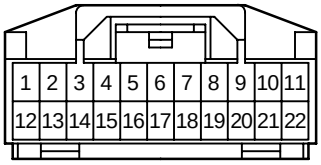

90980–11915

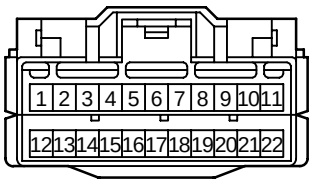

90980–11927

<FEMALE> 23P Non–waterproof Type

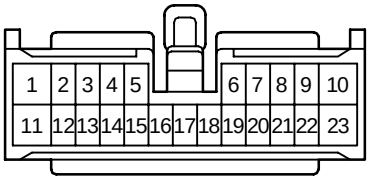

90980–10921

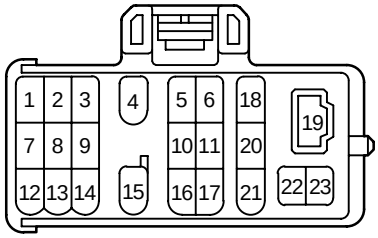

90980–11195

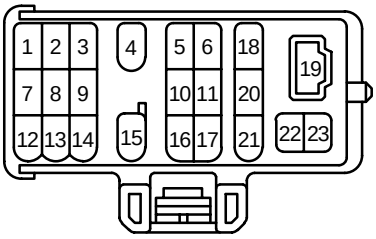

90980–11323

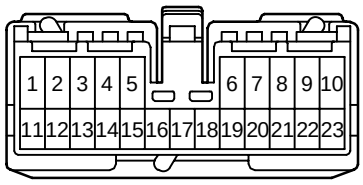

90980–11381

<FEMALE> 24P Non–waterproof Type

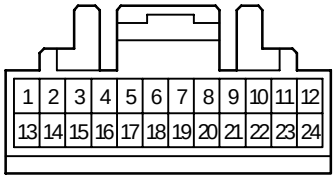

90980–10296

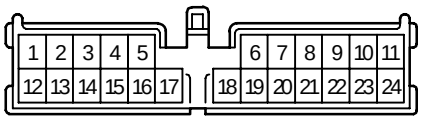

90980–10585

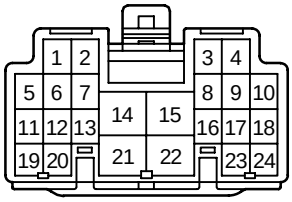

90980–10881

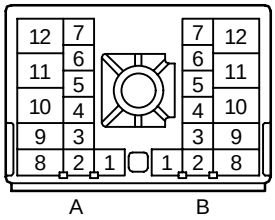

90980–10955

<FEMALE> 24P Non–waterproof Type

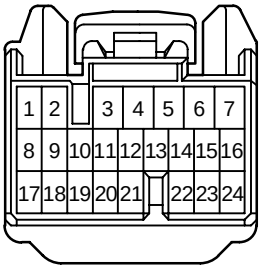

90980–11476

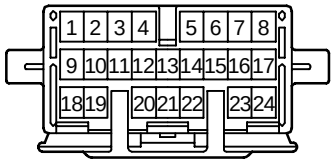

90980–11509

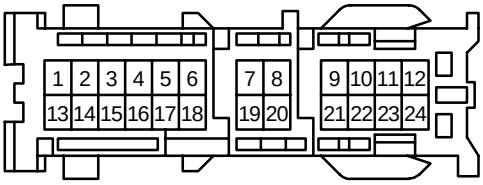

90980–12070

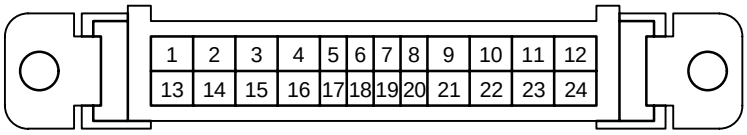

90980–12079

<FEMALE> 24P Non–waterproof Type

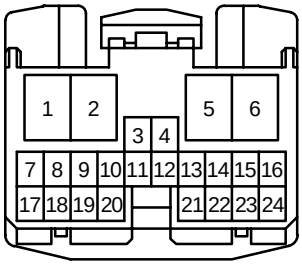

90980–12149

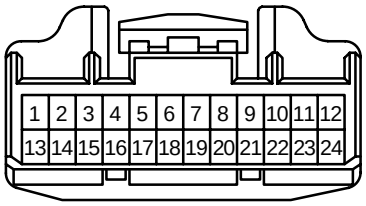

90980–12200

<FEMALE> 25P Non–waterproof Type

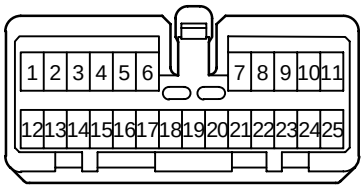

90980–11043

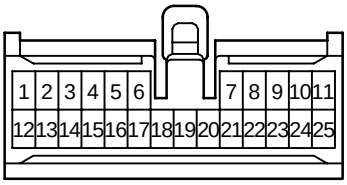

90980–11055

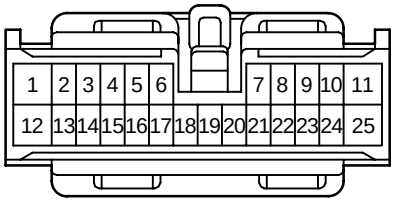

90980–11058

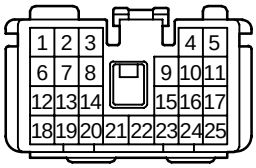

90980–11375

<FEMALE> 25P Non–waterproof Type

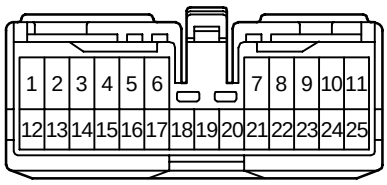

90980–11404

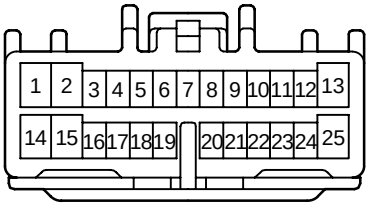

90980–11877

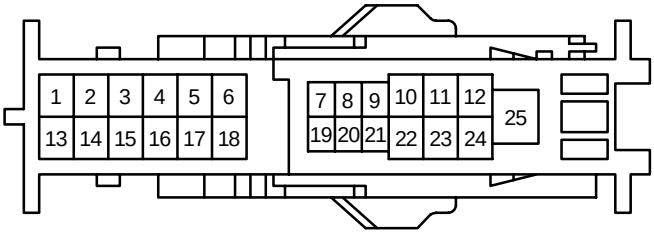

90980–12278

<FEMALE> 26P Non–waterproof Type

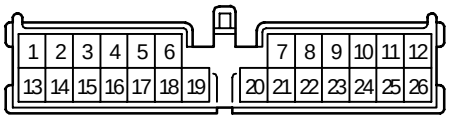

90980–10587

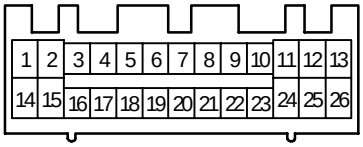

90980–10739

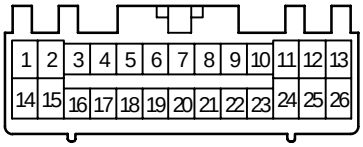

90980–10763

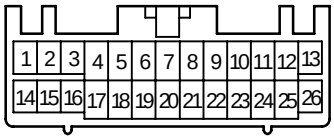

90980–10918

<FEMALE> 26P Non–waterproof Type

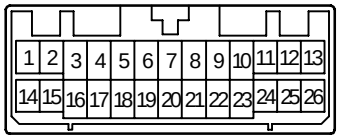

90980–10925

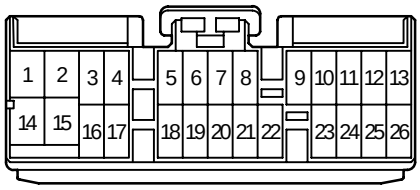

90980–11234

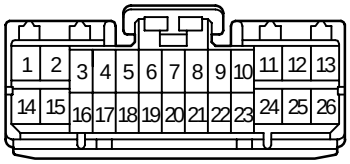

90980–11390

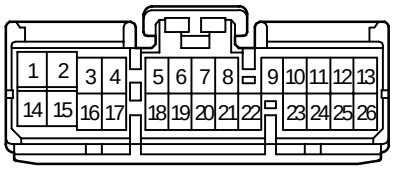

90980–11406

<FEMALE> 26P Non–waterproof Type

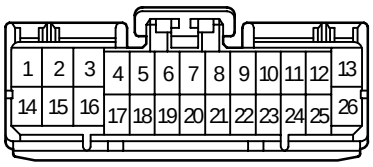

90980–11422

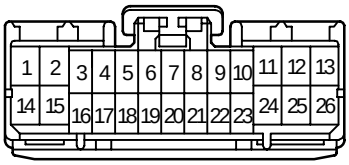

90980–11423

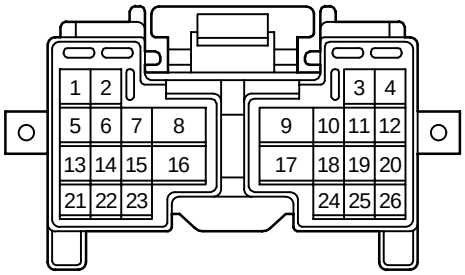

90980–11611

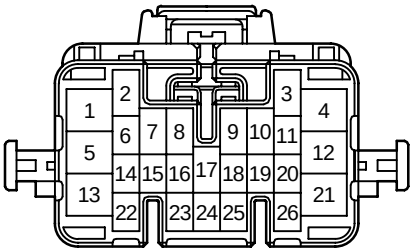

90980–11632

<FEMALE> 26P Non–waterproof Type

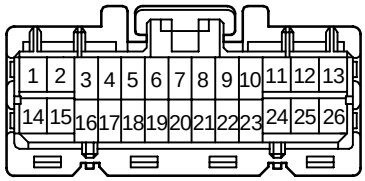

90980–11786

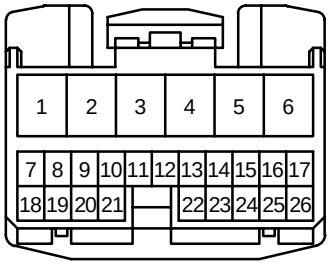

90980–12150

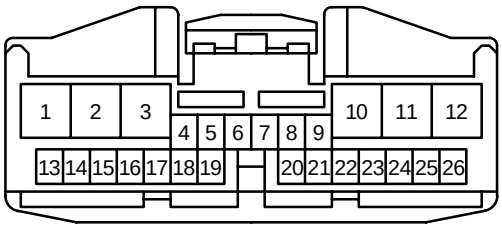

90980–12203

<FEMALE> 27P Non–waterproof Type

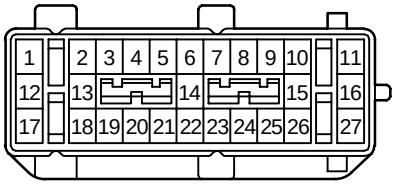

90980–11670

<FEMALE> 28P Non–waterproof Type

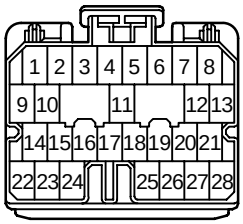

90980–11218

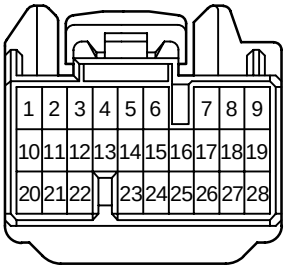

90980–11637

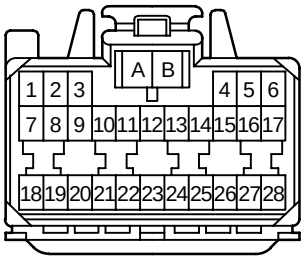

90980–11872

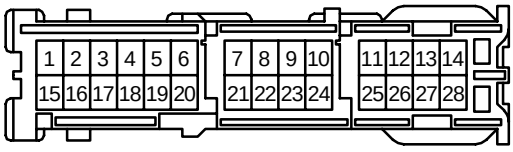

90980–12102

<FEMALE> 30P Non–waterproof Type

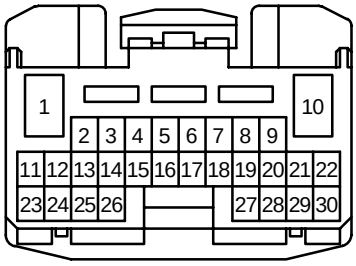

90980–12151

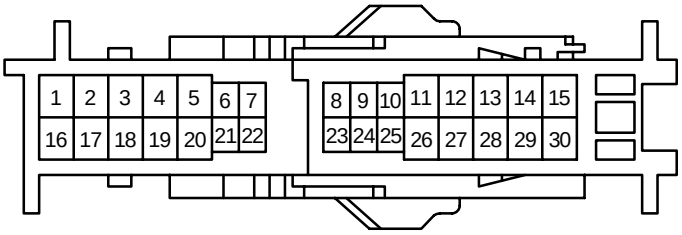

90980–12277

<FEMALE> 31P Non–waterproof Type

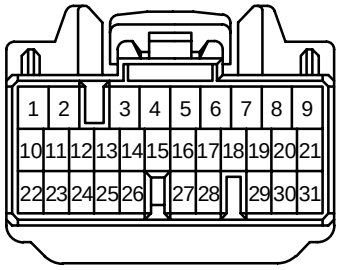

90980–11421

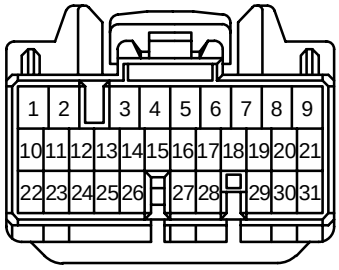

90980–11935

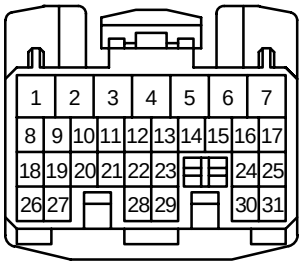

90980–12142

<FEMALE> 32P Non–waterproof Type

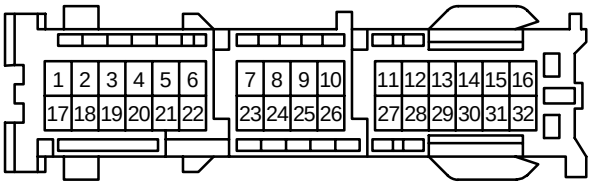

90980–12071

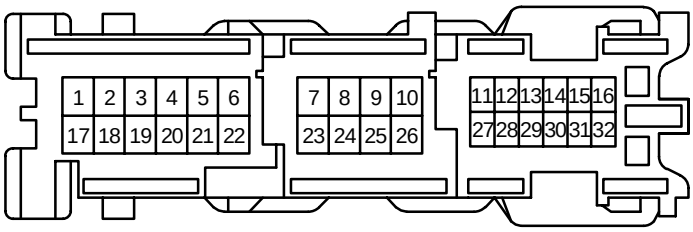

90980–12096

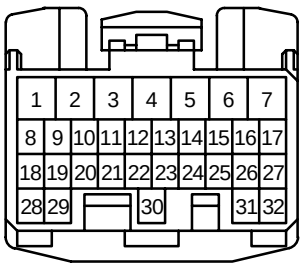

90980–12143

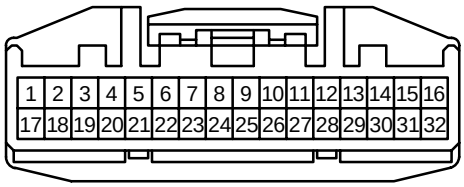

90980–12153

<FEMALE> 32P Non–waterproof Type

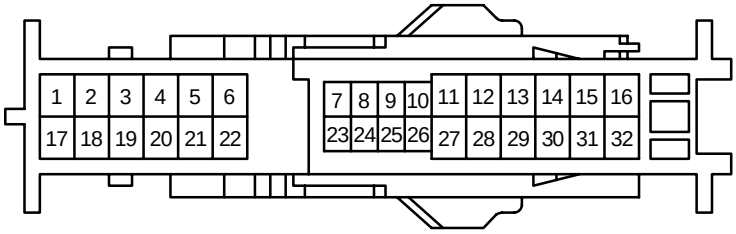

90980–12275

<FEMALE> 34P Non–waterproof Type

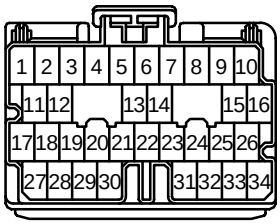

90980–11221

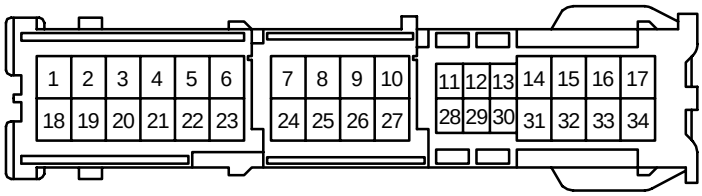

90980–12114

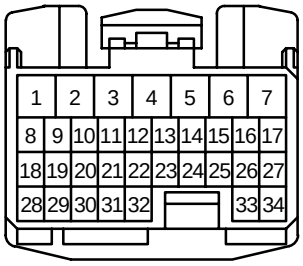

90980–12144

<FEMALE> 35P, 36P Non–waterproof Type

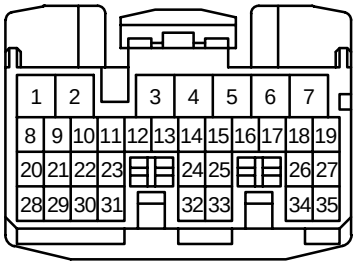

90980–12145

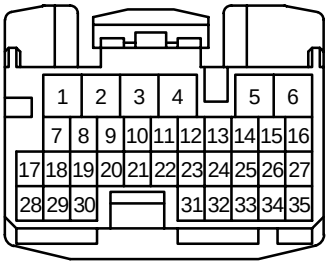

90980–12146

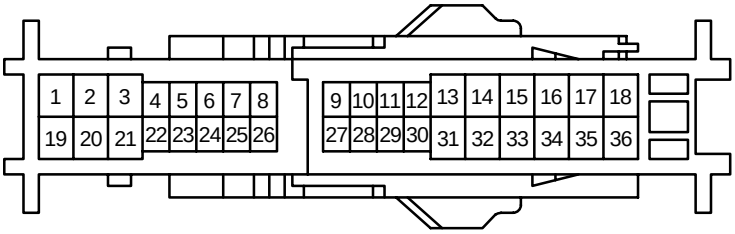

90980–12274

<FEMALE> 38P Non–waterproof Type

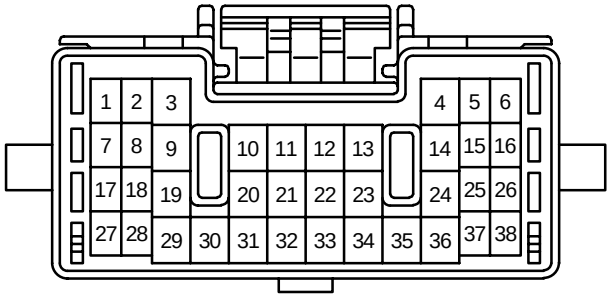

90980–11555

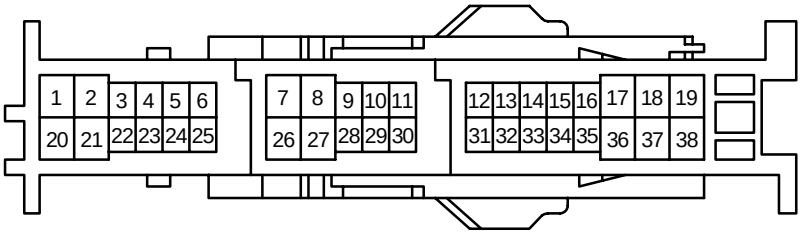

90980–12276

<FEMALE> 40P Non–waterproof Type

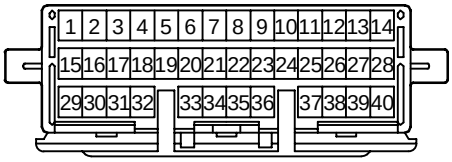

90980–11508

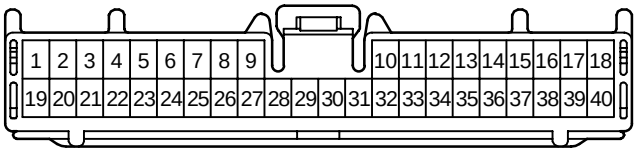

90980–11618

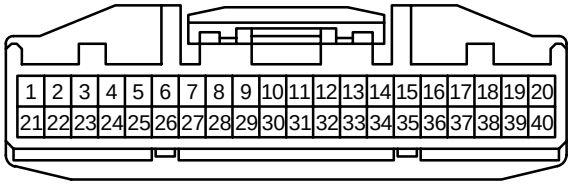

90980–12169

<FEMALE> 40P Non–waterproof Type

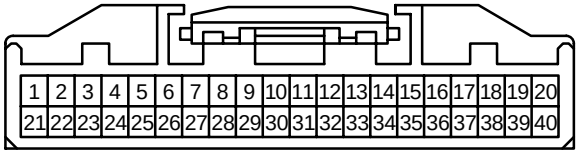

90980–12170

<FEMALE> 42P, 43P, 46P Non–waterproof Type

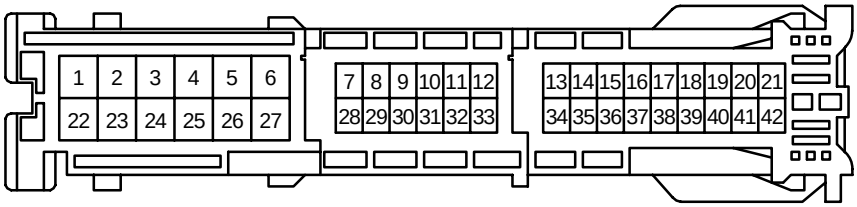

90980–12184

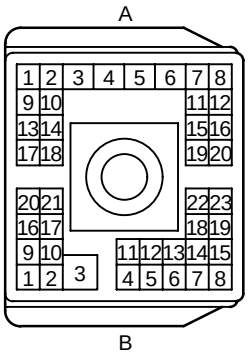

90980–11360

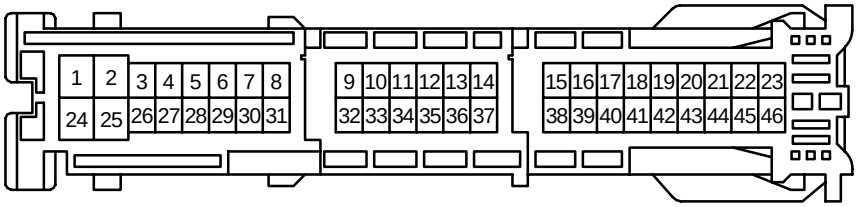

90980–12179

<FEMALE> 49P, 55P, 83P Non–waterproof Type

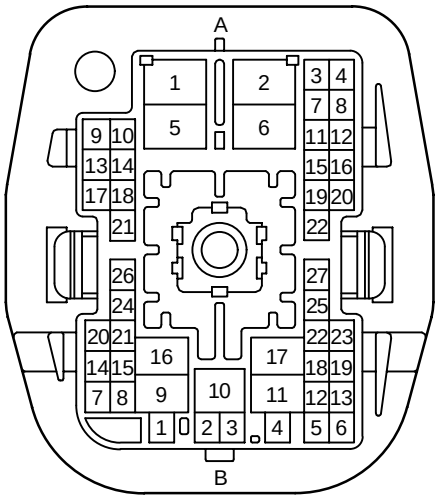

90980–11431

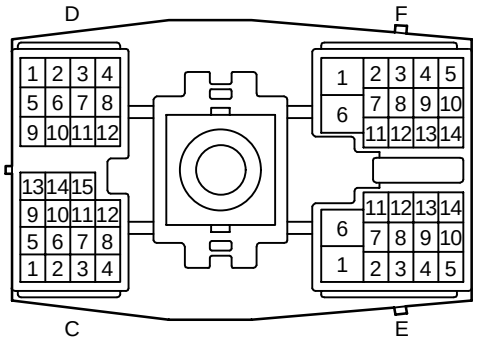

90980–11359

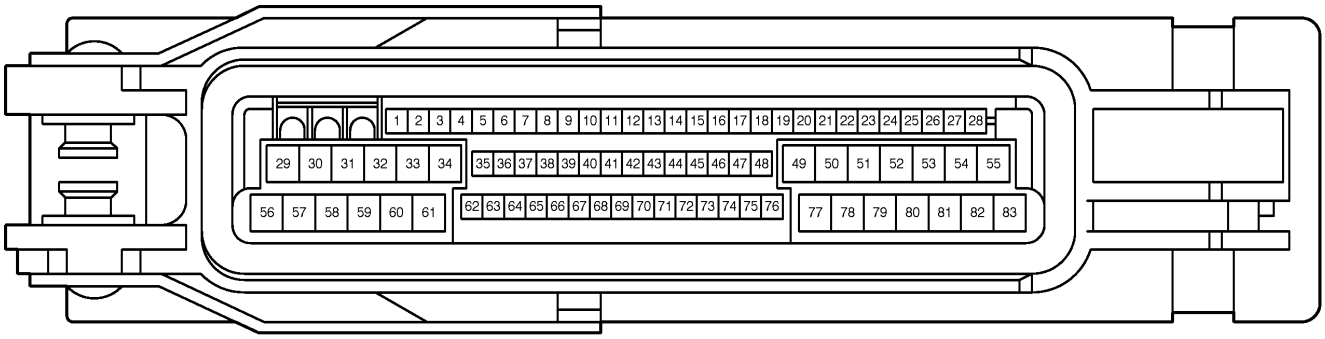

90980–11906

<FEMALE> 88P Non–waterproof Type

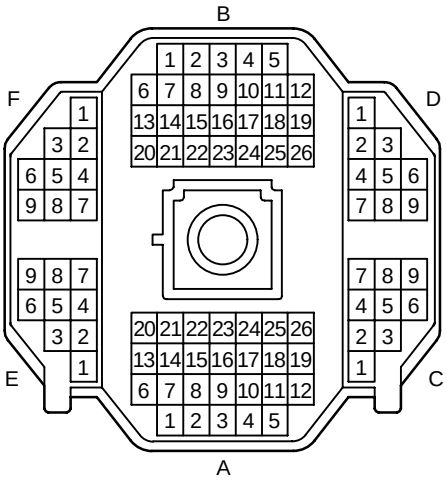

90980–10950

<MALE> 1P Waterproof Type

90980–10114	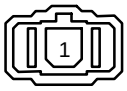 90980–10125	90980–10200	90980–10240
90980–10246	90980–10438	90980–10836	90980–10892
90980–10982	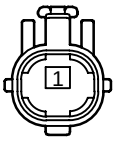 90980–11006	90980–11183	90980–11270
90980–11962			

<MALE> 2P Waterproof Type

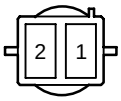 90980–10091	90980–10122	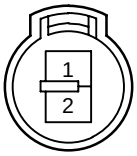 90980–10156 90980–10412	90980–10192
90980–10242	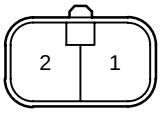 90980–10374	90980–10495	90980–10497
90980–10533	90980–10555 90980–10707	90980–10566	90980–10571
90980–10575	90980–10580	90980–10582	90980–10592
90980–10594	90980–10625 90980–10788	90980–10665	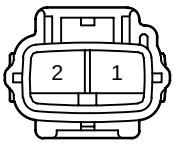 90980–10838

<MALE> 2P Waterproof Type

90980–10842	90980–10886	90980–10898	90980–10900
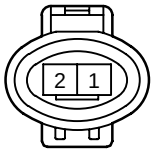 90980–10927	90980–10948	90980–10959	90980–10970
90980–11002	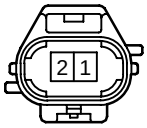 90980–11004	90980–11008	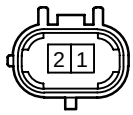 90980–11029
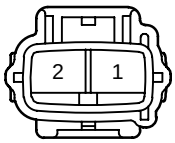 90980–11031	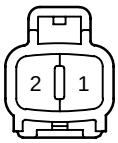 90980–11050	90980–11069	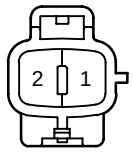 90980–11072
90980–11073 90980–11074	90980–11137	90980–11141	90980–11155

<MALE> 2P Waterproof Type

90980–11168	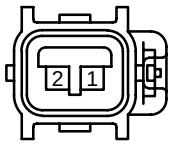 90980–11175	90980–11188	90980–11236
90980–11247	90980–11249	90980–11254	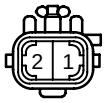 90980–11272
90980–11303	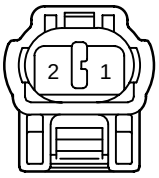 90980–11322	90980–11409	90980–11447
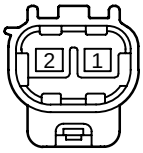 90980–11466	90980–11486	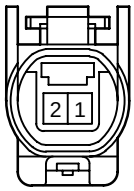 90980–11789	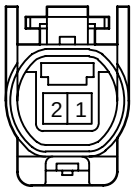 90980–11854
90980–11863	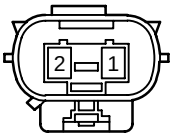 90980–11865	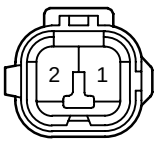 90980–11901	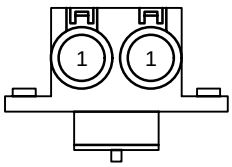 90980–11945

<MALE> 2P Waterproof Type

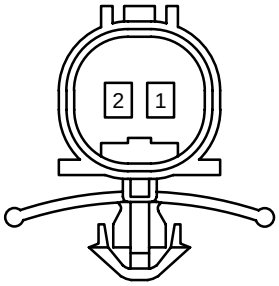 90980–12194			

<MALE> 3P Waterproof Type

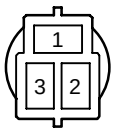 90980–10093	90980–10190	90980–10235	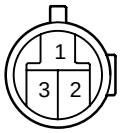 90980–10244
90980–10248 90980–10347	90980–10394 90980–10444	90980–10492 90980–10493 90980–10774 90980–10787	90980–10500
90980–10553 90980–10577 90980–10777	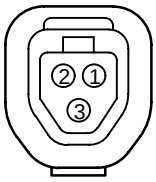 90980–10682	90980–10689	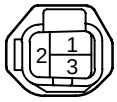 90980–10698
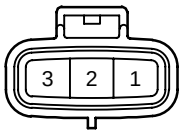 90980–10840	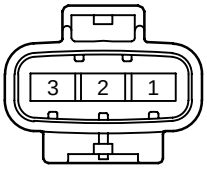 90980–10944	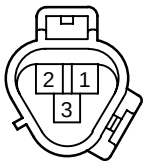 90980–11015	90980–11044
90980–11131	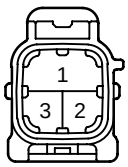 90980–11160	90980–11169	90980–11244 90980–11295 90980–11407

<MALE> 3P Waterproof Type

90980–11293	90980–11341	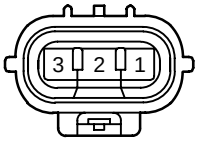 90980–11348	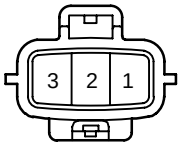 90980–11607
90980–11622	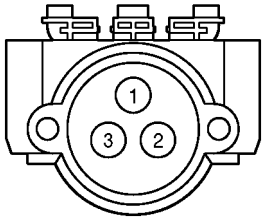 90980–12131		

<MALE> 4P Waterproof Type

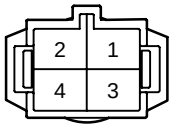 90980–10094	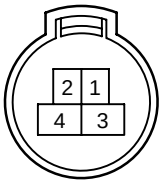 90980–10139	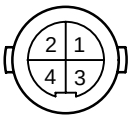 90980–10202	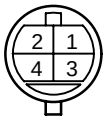 90980–10217
90980–10475	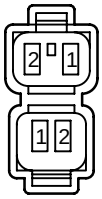 90980–10510 90980–11076	90980–10590	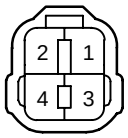 90980–10648
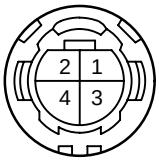 90980–10662	90980–10749	90980–10751 90980–10768	90980–10868
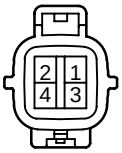 90980–10941	90980–10989	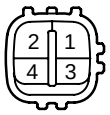 90980–11027	90980–11035
90980–11063 90980–11064	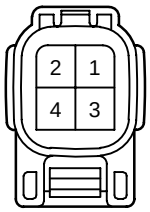 90980–11122	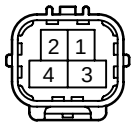 90980–11138	90980–11177

<MALE> 4P Waterproof Type

 90980–11262 90980–11328	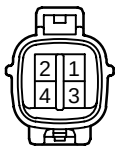 90980–11268	 90980–11287	 90980–11291
 90980–11929	 90980–12177		

<MALE> 5P Waterproof Type

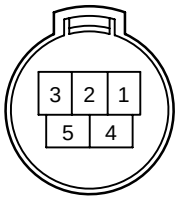 90980–10161	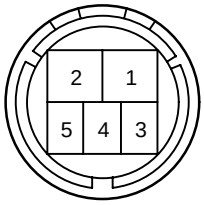 90980–10392	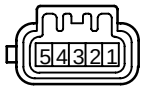 90980–10557 90980–10570	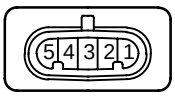 90980–10642
90980–10709	90980–10945	90980–11021	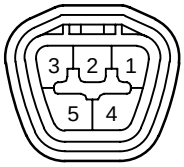 90980–11078
90980–11181	90980–11412	90980–11598	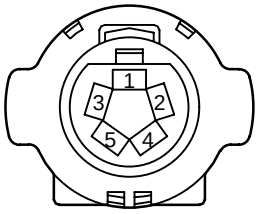 90980–11689

<MALE> 6P, 7P Waterproof Type

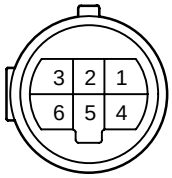 90980–10194	 90980–10477	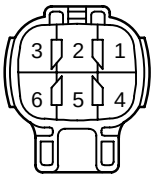 90980–10596	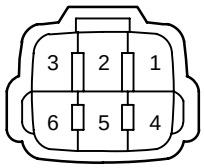 90980–10650 90980–10984
 90980–10987	 90980–11033	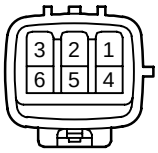 90980–11193	 90980–11196
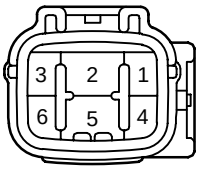 90980–11267	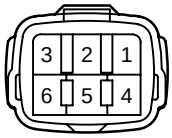 90980–11289	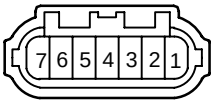 90980–10627	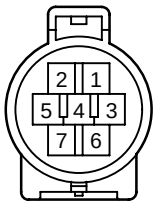 90980–10930
 90980–11171			

<MALE> 8P, 9P Waterproof Type

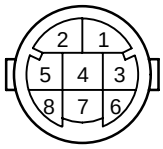 90980–10204	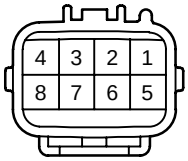 90980–10890	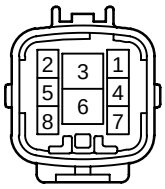 90980–10894
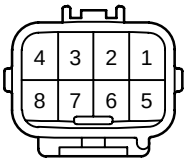 90980–10896	 90980–11241	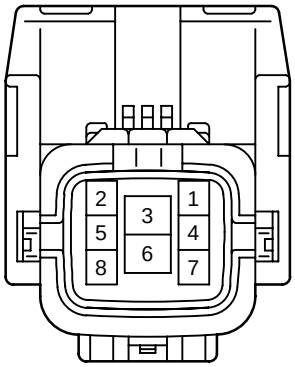 90980–11460
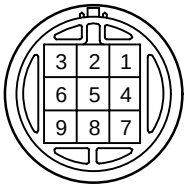 90980–10379	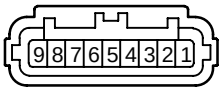 90980–10677	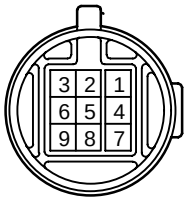 90980–10775
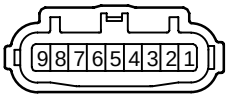 90980–10826	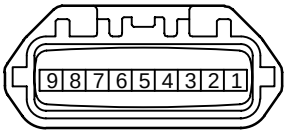 90980–11191	

<MALE> 11P, 12P, 13P, 15P Waterproof Type

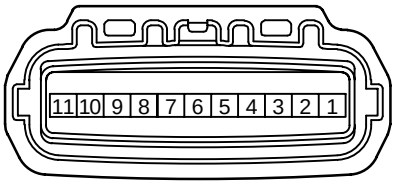 90980–11173	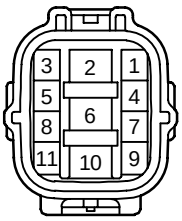 90980–11239	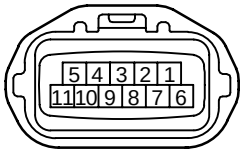 90980–11256
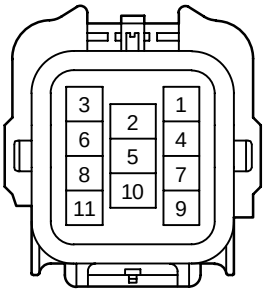 90980–11609	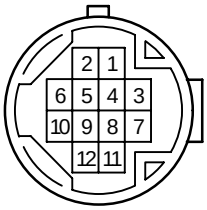 90980–10568	90980–11086
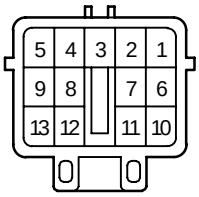 90980–10653	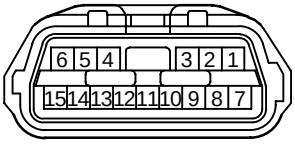 90980–11088	

<MALE> 16P, 17P Waterproof Type

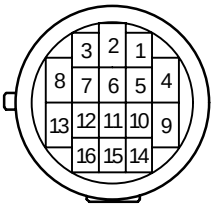

90980–10287

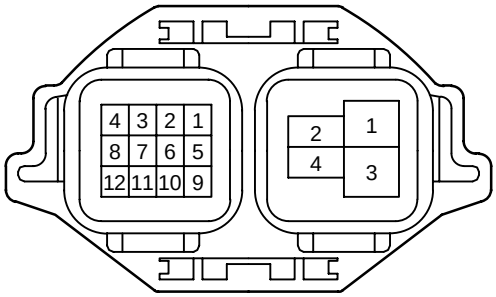

90980–10547

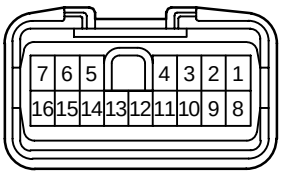

90980–11462

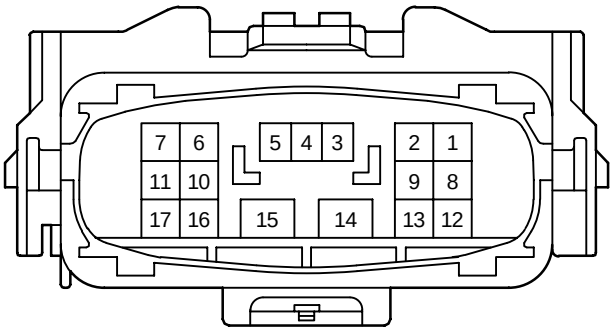

90980–11600

<MALE> 120P Waterproof Type

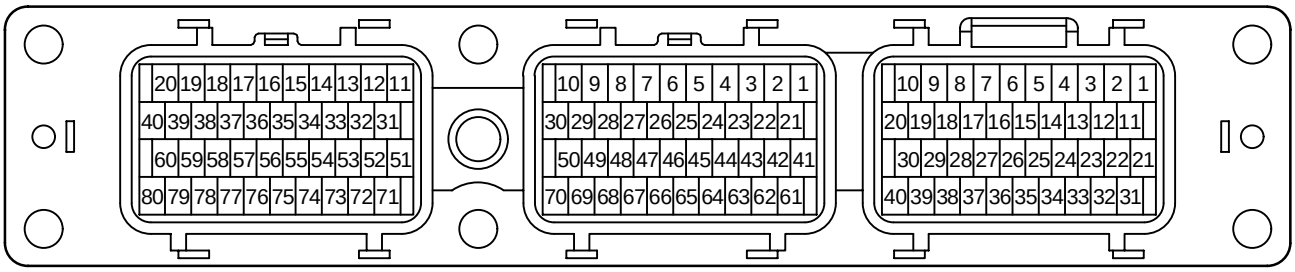

90980–11213

<MALE> 1P Non–waterproof Type

90980–10160	90980–10178	90980–10182	90980–10251
90980–10253	90980–10342	90980–10396	90980–10433 90980–10434
90980–10870 90980–11026 90980–11097	90980–10994	90980–11146	90980–11258
90980–11737	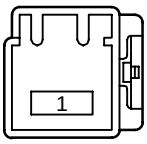 90980–11774	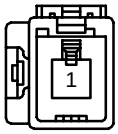 90980–12041	

<MALE> 2P Non–waterproof Type

90980–10011	90980–10038	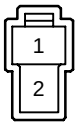 90980–10213 90980–10305	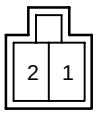 90980–10255
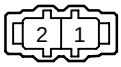 90980–10286	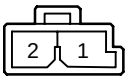 90980–10297	90980–10344 90980–10346	90980–10354 90980–10437
90980–10356	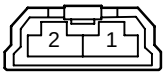 90980–10424	90980–10620	90980–10687
90980–10824	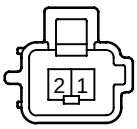 90980–10833 90980–11299	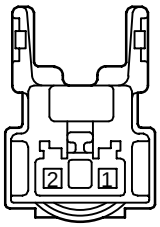 90980–10849	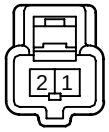 90980–10859
90980–10905	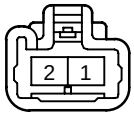 90980–10915	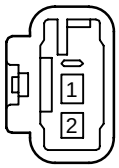 90980–10934	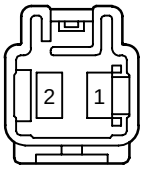 90980–10958

<MALE> 2P Non–waterproof Type

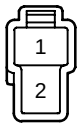 90980–11014	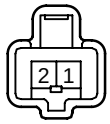 90980–11060	90980–11093	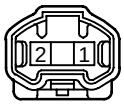 90980–11159
90980–11211	90980–11300	90980–11305	90980–11367
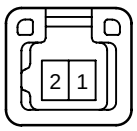 90980–11368	90980–11395	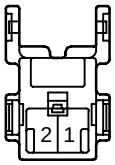 90980–11545	90980–11589
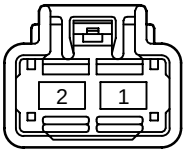 90980–11655	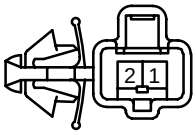 90980–11724	90980–11735	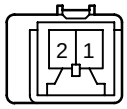 90980–11883
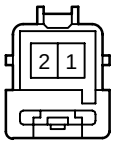 90980–11889	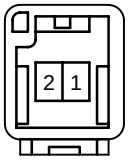 90980–11917	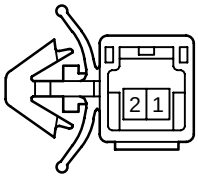 90980–11933	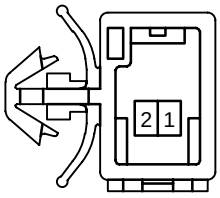 90980–11967

<MALE> 2P Non–waterproof Type

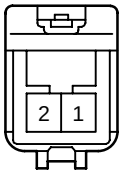 90980–11992	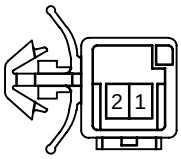 90980–12062		

<MALE> 3P Non–waterproof Type

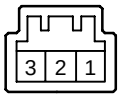 90980–10055 90980–10163	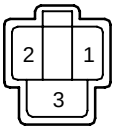 90980–10188	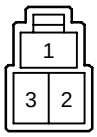 90980–10215 90980–10283 90980–10299	90980–10231
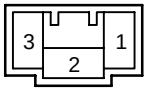 90980–10257 90980–10300 90980–10410	90980–10364 90980–10573	90980–10544	90980–10907
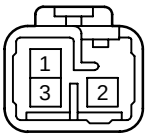 90980–10979	90980–11052	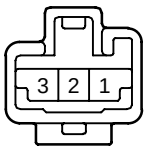 90980–11229	90980–11298
90980–11385	90980–11470	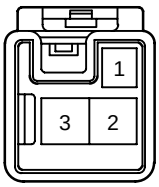 90980–11484	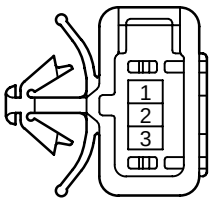 90980–11489
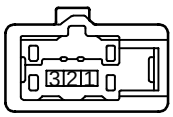 90980–11620	90980–11763	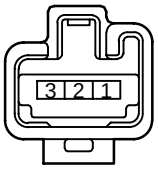 90980–11874	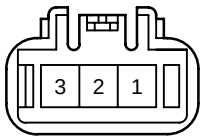 90980–11936

<MALE> 3P Non–waterproof Type

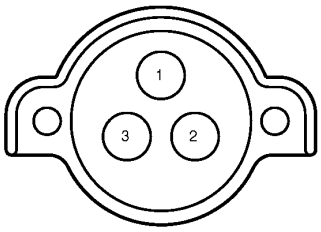 90980–11937	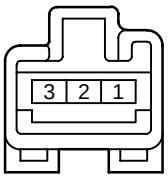 90980–11994	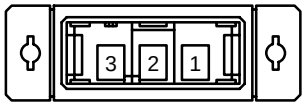 90980–12196	

<MALE> 4P Non–waterproof Type

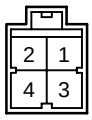 90980–10001	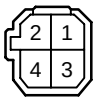 90980–10126	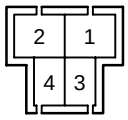 90980–10144	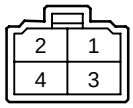 90980–10170
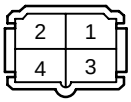 90980–10219	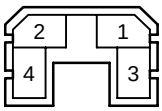 90980–10237	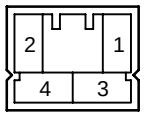 90980–10259	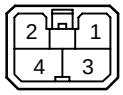 90980–10306
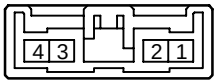 90980–10399	90980–10466	90980–10502	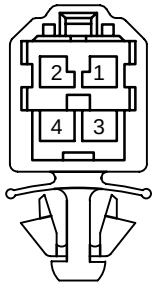 90980–10503
90980–10600	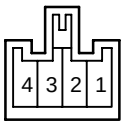 90980–10691	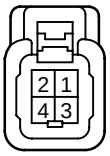 90980–10794	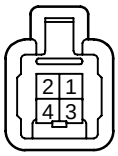 90980–10858
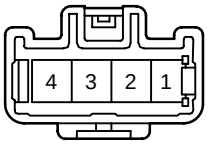 90980–10866	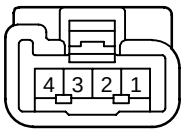 90980–11012	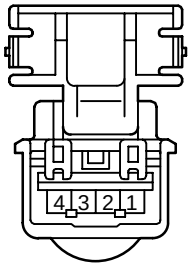 90980–11023	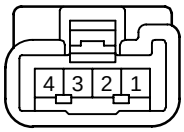 90980–11100

<MALE> 4P Non–waterproof Type

90980–11106	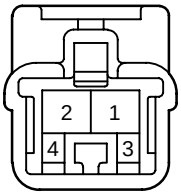 90980–11126	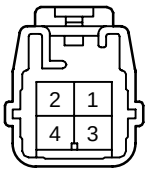 90980–11135	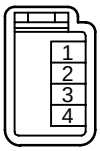 90980–11186
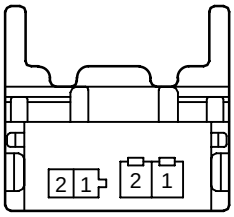 90980–11301	90980–11399	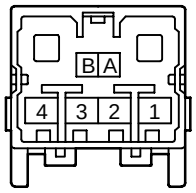 90980–11426	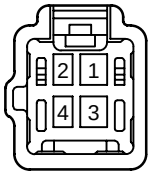 90980–11605
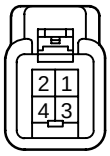 90980–11765	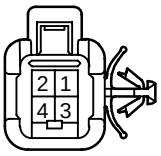 90980–11779	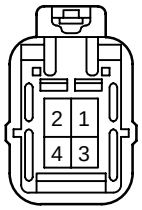 90980–11809	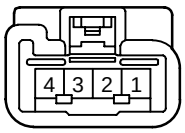 90980–11812
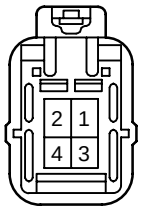 90980–11878	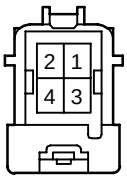 90980–11891	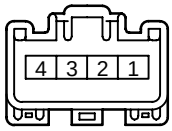 90980–11965	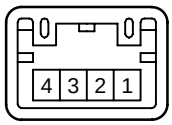 90980–11985
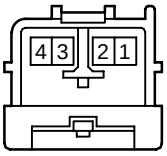 90980–12016	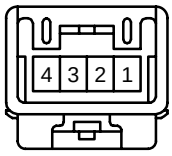 90980–12123	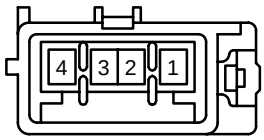 90980–12159	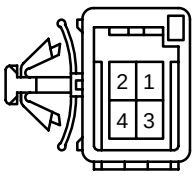 90980–12212

<MALE> 5P Non–waterproof Type

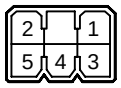 90980–10040	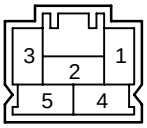 90980–10261	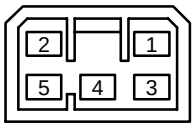 90980–10308	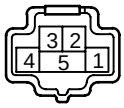 90980–10518
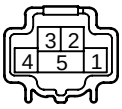 90980–10519	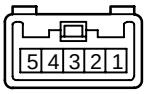 90980–10762	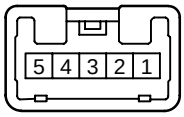 90980–10790	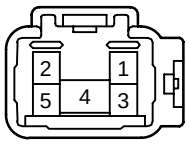 90980–10985
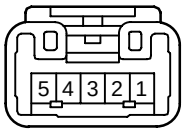 90980–11085	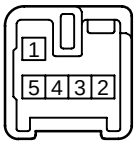 90980–11318	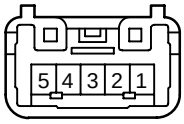 90980–11327	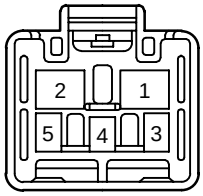 90980–11602
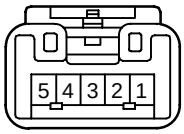 90980–11843	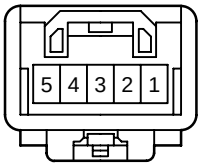 90980–11920	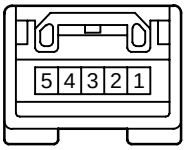 90980–11968	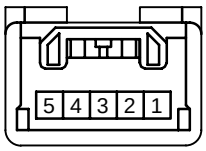 90980–12036
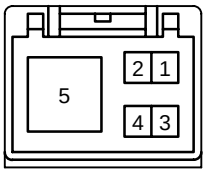 90980–12050	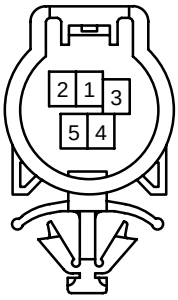 90980–12189		

<MALE> 6P Non–waterproof Type

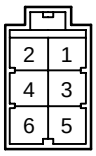 90980–10003	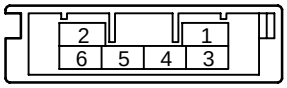 90980–10027	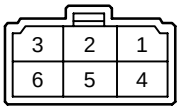 90980–10172	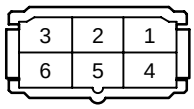 90980–10223
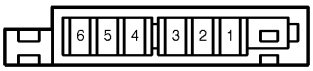 90980–10289	 90980–10312	 90980–10366 90980–10505	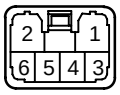 90980–10384 90980–10416 90980–10641
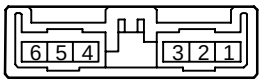 90980–10401	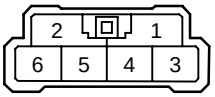 90980–10446	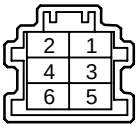 90980–10602	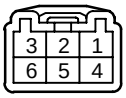 90980–10603
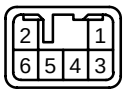 90980–10671	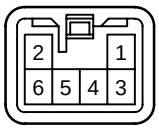 90980–10694	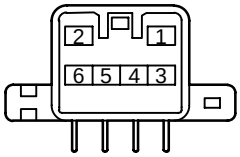 90980–10793	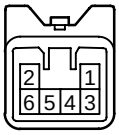 90980–10796
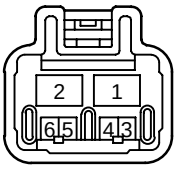 90980–10909	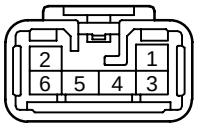 90980–10975	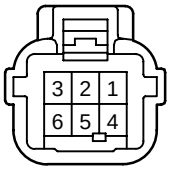 90980–10998	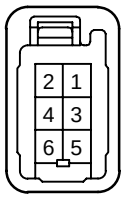 90980–11010

<MALE> 6P Non–waterproof Type

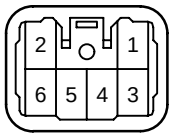 90980–11067	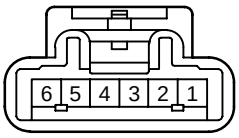 90980–11099	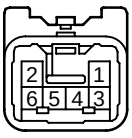 90980–11101	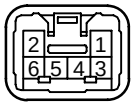 90980–11110
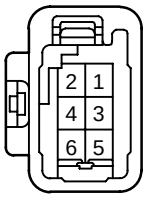 90980–11452	90980–11487	90980–11492	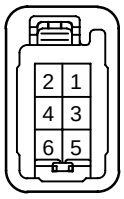 90980–11587
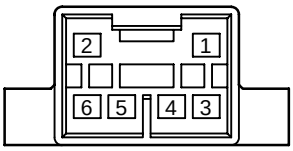 90980–11696	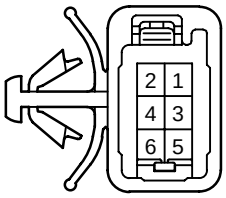 90980–11814	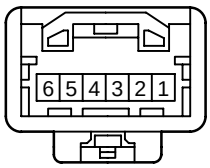 90980–12004	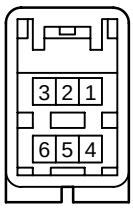 90980–12013
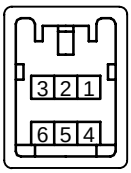 90980–12064	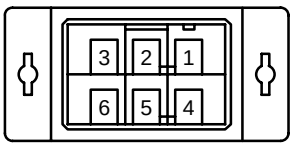 90980–12198	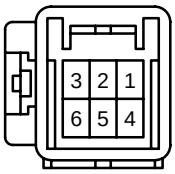 90980–12204	

<MALE> 7P Non–waterproof Type

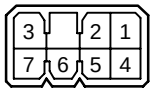 90980–10042	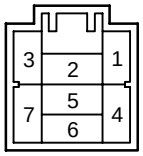 90980–10263	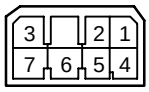 90980–10310	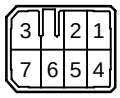 90980–10451
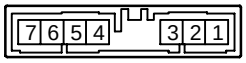 90980–10459	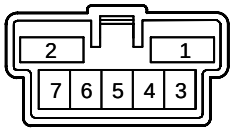 90980–10728 90980–10771	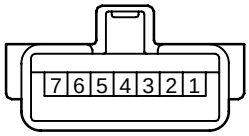 90980–11164	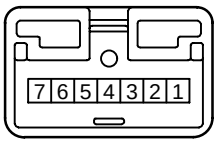 90980–11339
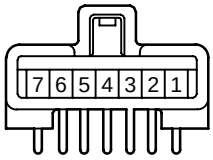 90980–11402	 90980–11528	 90980–11739	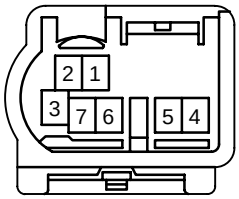 90980–12059
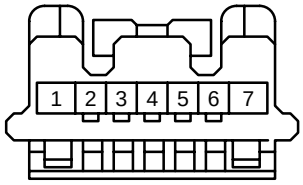 90980–12092			

<MALE> 8P Non–waterproof Type

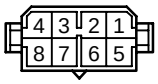 90980–10018	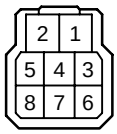 90980–10147	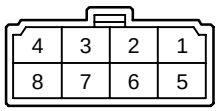 90980–10174
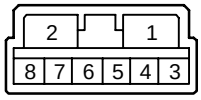 90980–10208 90980–10210 90980–10383 90980–10411	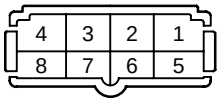 90980–10225	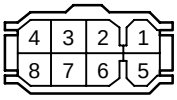 90980–10279
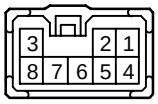 90980–10360	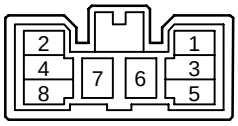 90980–10403	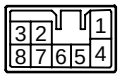 90980–10418
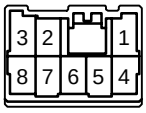 90980–10430 90980–10546	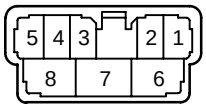 90980–10462	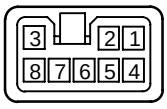 90980–10769

<MALE> 8P Non–waterproof Type

 90980–10798	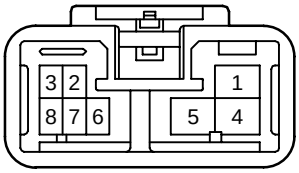 90980–10876 90980–11438	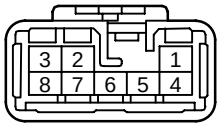 90980–10963
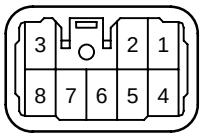 90980–11123	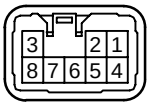 90980–11134	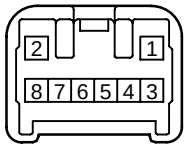 90980–11320
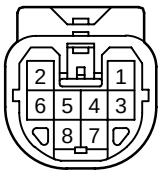 90980–11353	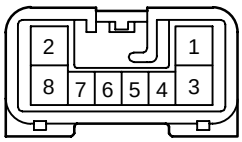 90980–11361	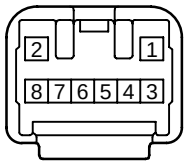 90980–11389
 90980–11532	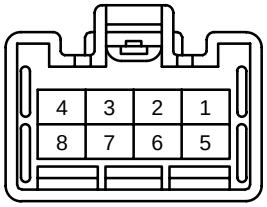 90980–11551	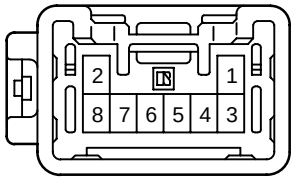 90980–11582

<MALE> 8P Non–waterproof Type

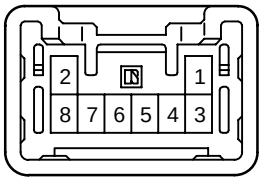 90980–11588	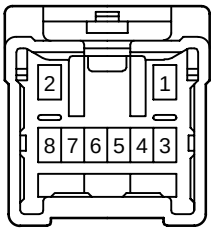 90980–11623	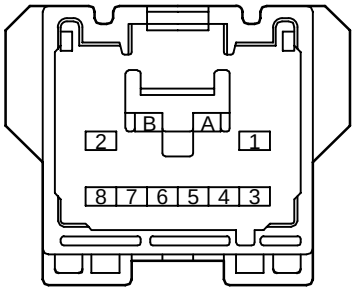 90980–11629
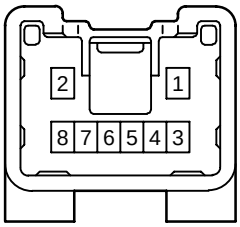 90980–11636	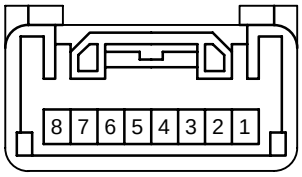 90980–12061	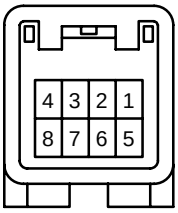 90980–12112
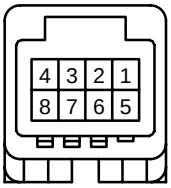 90980–12220		

<MALE> 9P Non–waterproof Type

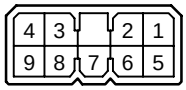 90980–10044	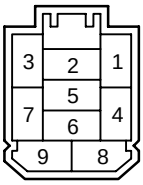 90980–10265	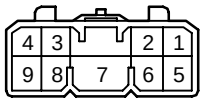 90980–10317
 90980–11534	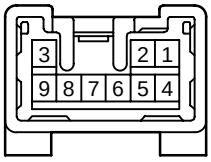 90980–11543	 90980–11709

<MALE> 10P Non–waterproof Type

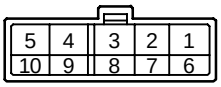 90980–10176	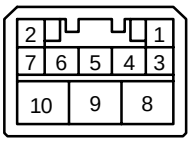 90980–10281	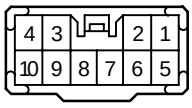 90980–10375 90980–10417 90980–10427 90980–10516
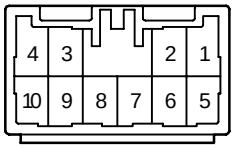 90980–10468	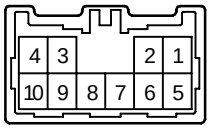 90980–10527 90980–10719	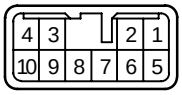 90980–10666
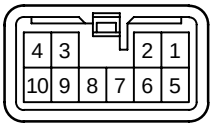 90980–10693	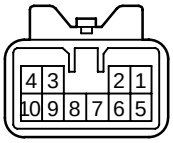 90980–10800	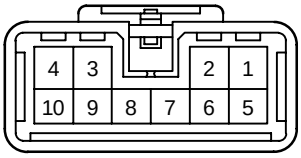 90980–10861
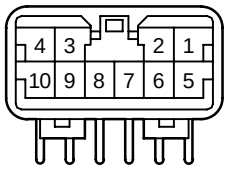 90980–10865 90980–11419	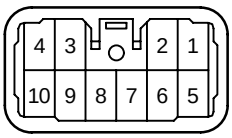 90980–10961	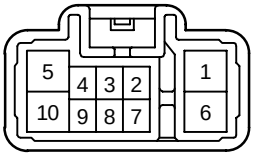 90980–10992

<MALE> 10P Non–waterproof Type

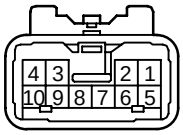 90980–11102	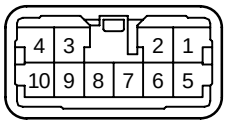 90980–11325 90980–11331	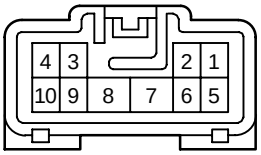 90980–11365
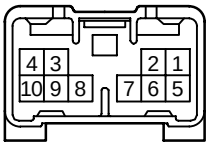 90980–11449	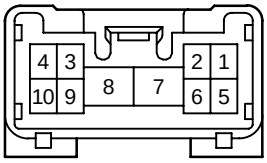 90980–11526	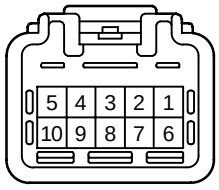 90980–11536
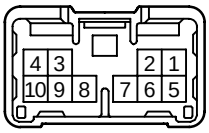 90980–11544	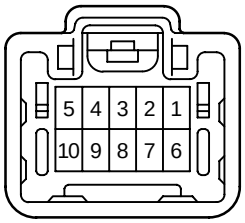 90980–11580	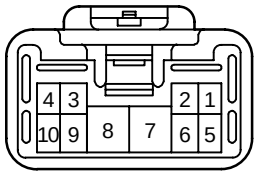 90980–11596
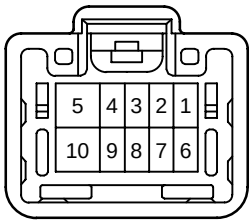 90980–11613	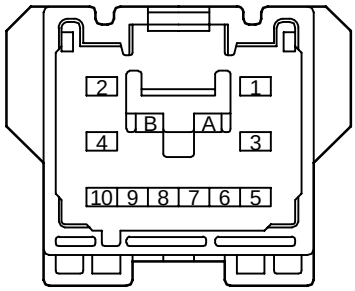 90980–11641	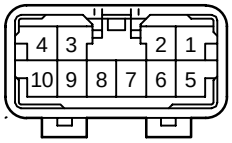 90980–11752

<MALE> 10P Non–waterproof Type

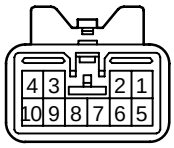 90980–11757	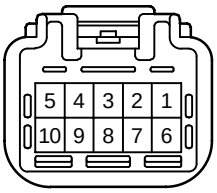 90980–11823	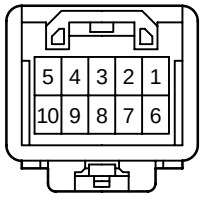 90980–11922
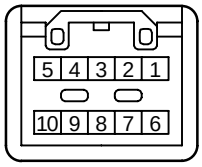 90980–11993	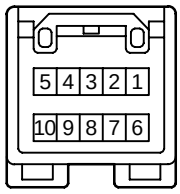 90980–12009	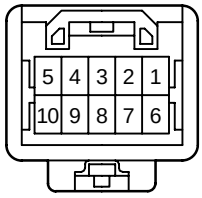 90980–12023
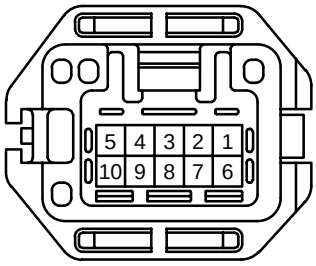 90980–12249		

<MALE> 11P Non–waterproof Type

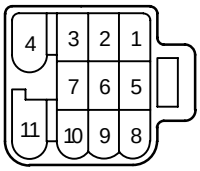 90980–10531	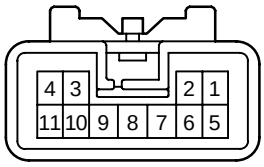 90980–10829	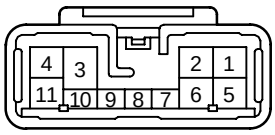 90980–10872
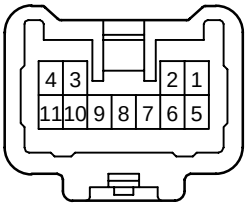 90980–11200	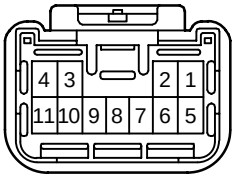 90980–11538	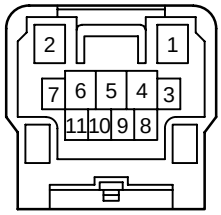 90908–12002
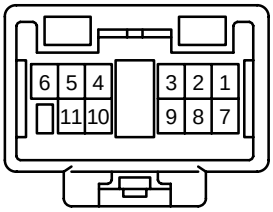 90980–12250		

<MALE> 12P Non–waterproof Type

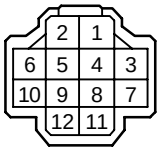 90980–10149	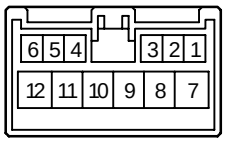 90980–10405	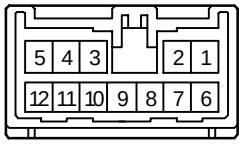 90980–10407 90980–10529
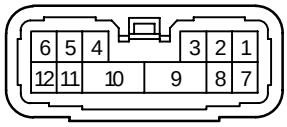 90980–10415	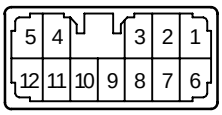 90980–10436 90980–10440	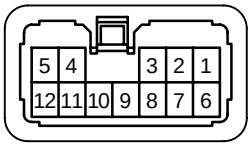 90980–10513
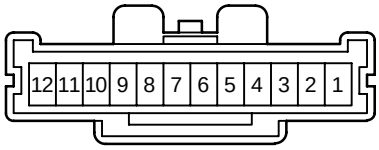 90980–10564	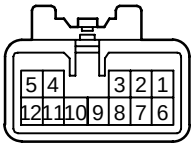 90980–10802	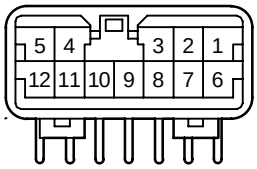 90980–10864
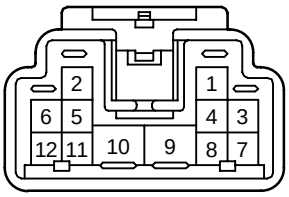 90980–10878	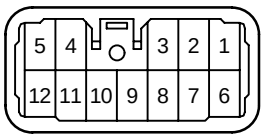 90980–10938 90980–11105	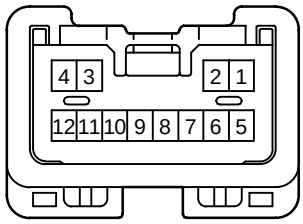 90980–11474

<MALE> 12P Non–waterproof Type

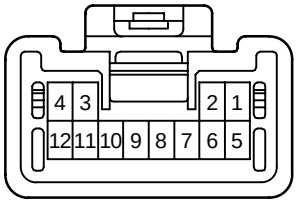 90980–11500	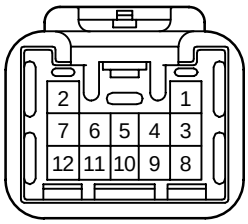 90980–11530	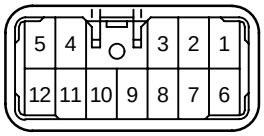 90980–11747

<MALE> 13P Non–waterproof Type

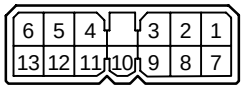 90980–10032	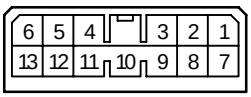 90980–10061	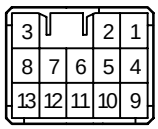 90980–10323
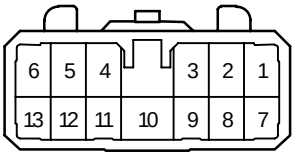 90980–10479	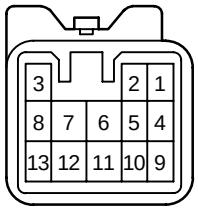 90980–10804	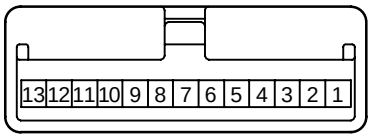 90980–11198
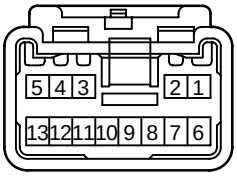 90980–11393	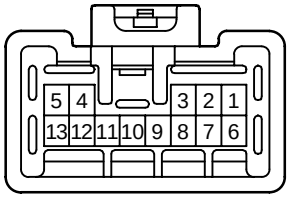 90980–11541	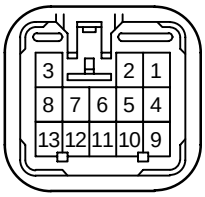 90980–11568
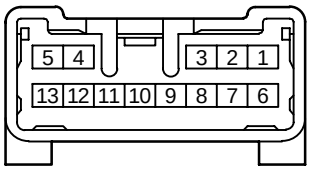 90980–11635	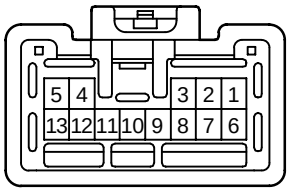 90980–11694	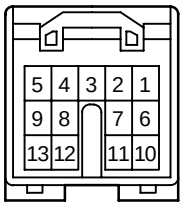 90980–11951

<MALE> 14P Non–waterproof Type

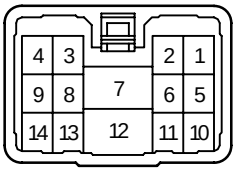 90980–10329	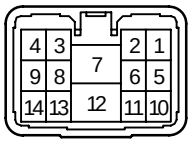 90980–10422
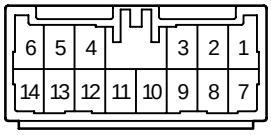 90980–10470	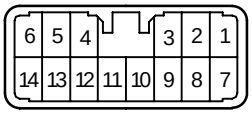 90980–10506 90980–10715
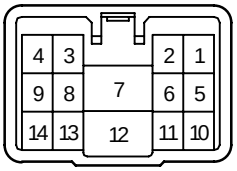 90980–10545	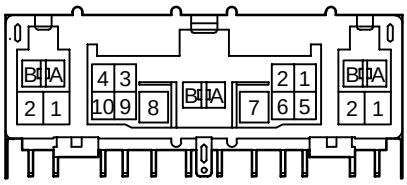 90980–10767

<MALE> 14P Non–waterproof Type

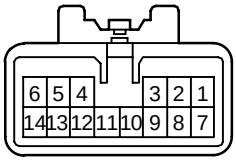

90980–10806

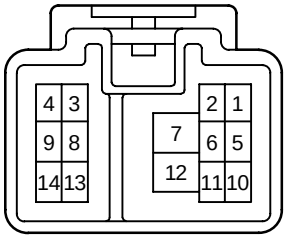

90980–10812

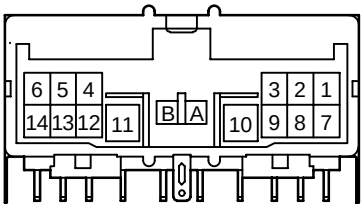

90980–10851

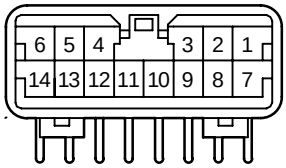

90980–10971
90980–11265

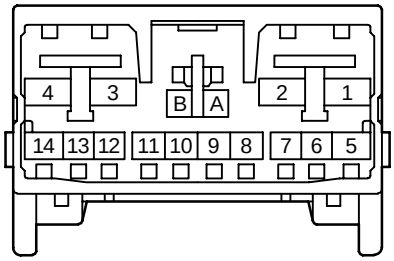

90980–11312

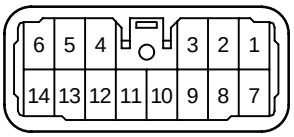

90980–11337

<MALE> 14P Non–waterproof Type

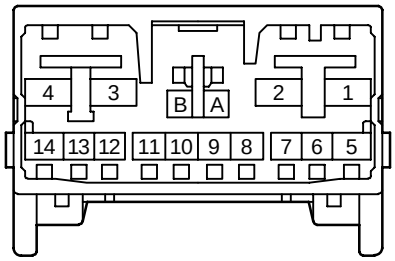

90980–11464

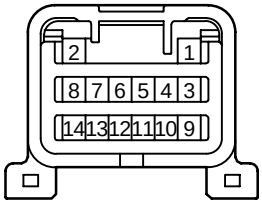

90980–11510

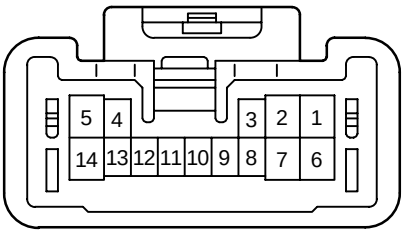

90980–11590

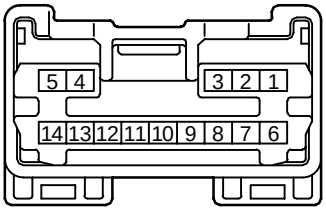

90980–11644
90980–11743
90980–11744

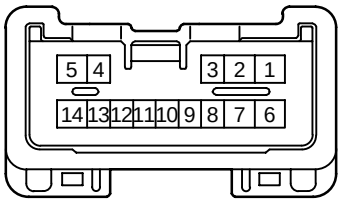

90980–11651

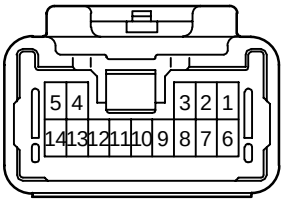

90980–11654

<MALE> 14P Non–waterproof Type

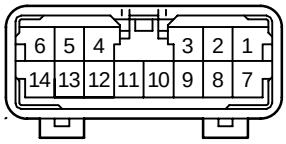 90980–11753	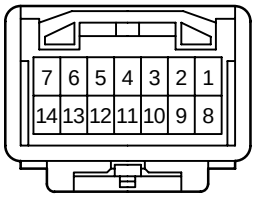 90980–11910
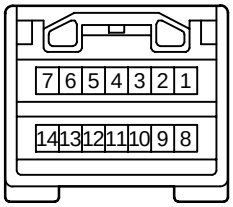 90980–11969 90980–12015	

<MALE> 15P Non–waterproof Type

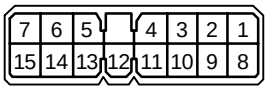

90980–10065

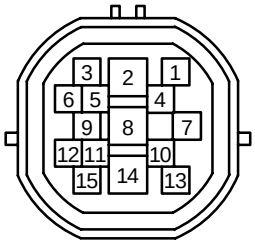

90980–10442

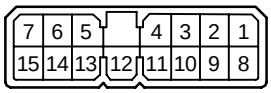

90980–10461

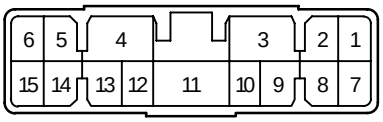

90980–10562

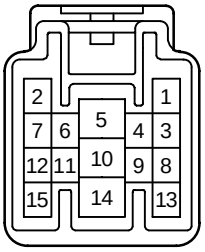

90980–10814

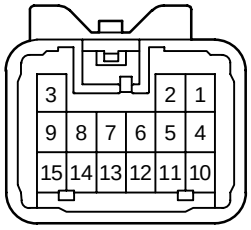

90980–10827

<MALE> 15P Non–waterproof Type

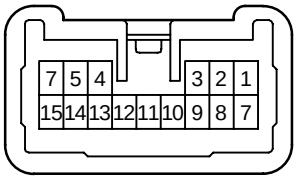

90980–11180

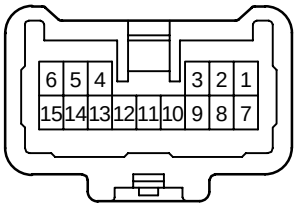

90980–11201

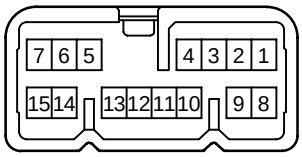

90980–11263

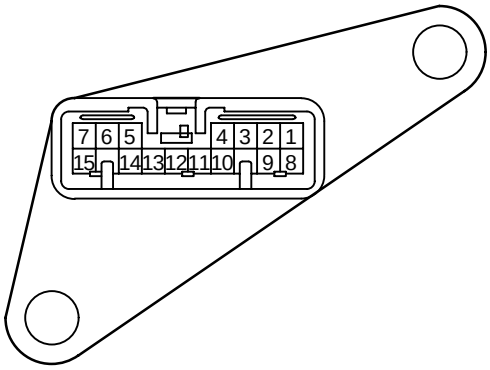

90980–11370

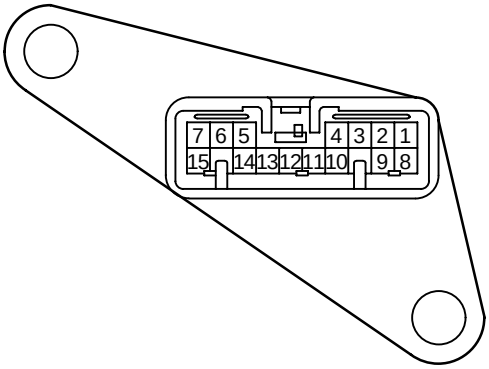

90980–11371

<MALE> 16P Non–waterproof Type

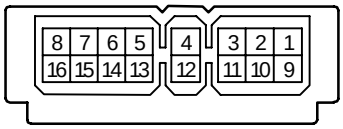

90980–10026

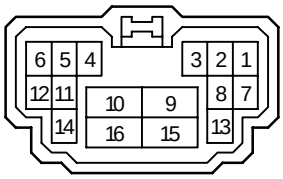

90980–10453

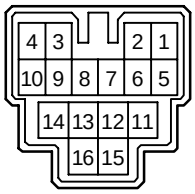

90980–10485

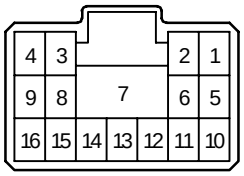

90980–10521

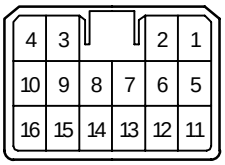

90980–10542

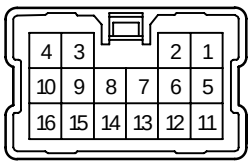

90980–10560

<MALE> 16P Non–waterproof Type

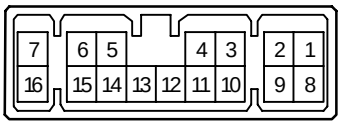

90980–10744

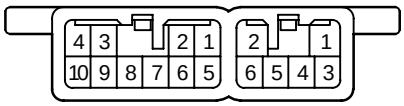

90980–10753

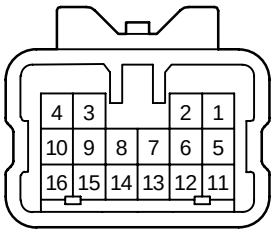

90980–10808
90980–11444

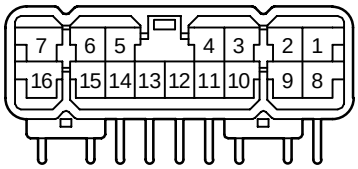

90980–10874

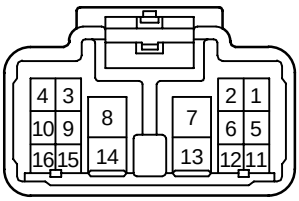

90980–10884

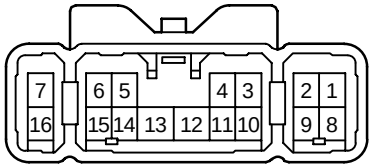

90980–11167

<MALE> 16P Non–waterproof Type

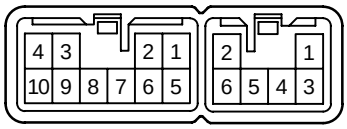

90980–11324

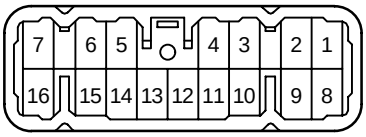

90980–11351

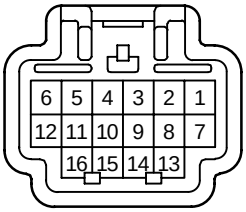

90980–11415

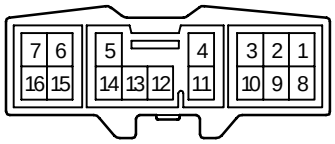

90980–11434

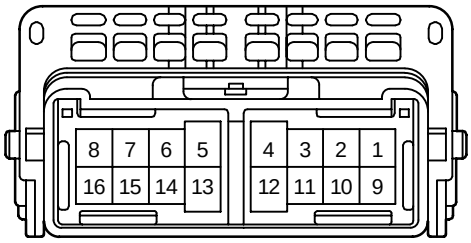

90980–11546

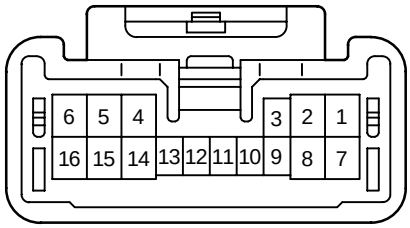

90980–11561

<MALE> 16P Non–waterproof Type

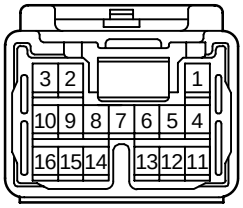

90980–11573

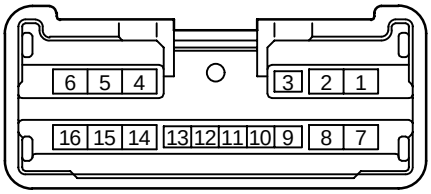

90980–11624

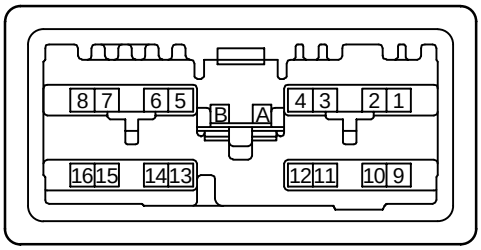

90980–11680

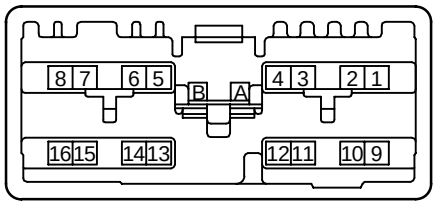

90980–11682

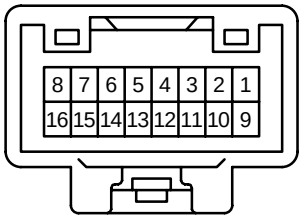

90980–12192

<MALE> 17P Non–waterproof Type

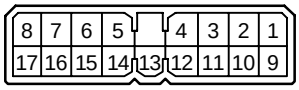

90980–10030

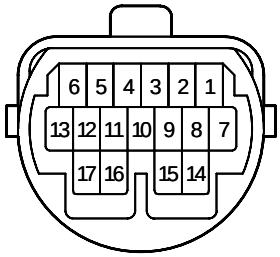

90980–10730

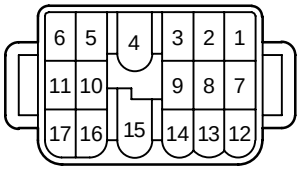

90980–11046

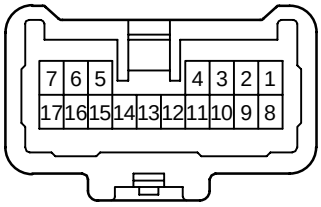

90980–11202

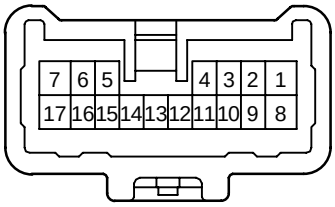

90980–11309

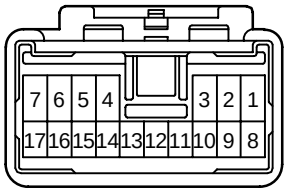

90980–11334

<MALE> 17P Non–waterproof Type

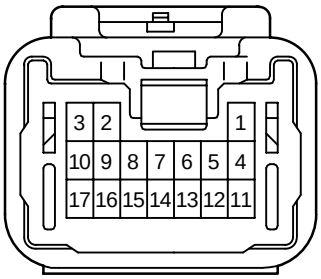

90980–11505

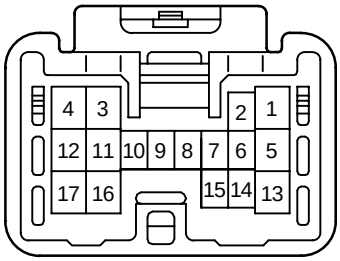

90980–11559

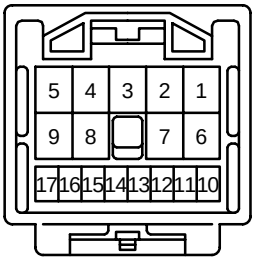

90980–12161

<MALE> 18P Non–waterproof Type

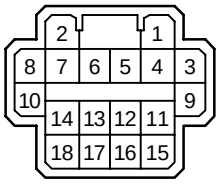

90980–10284

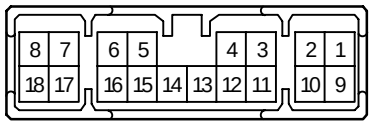

90980–10325

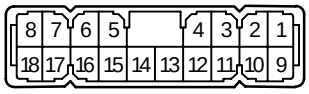

90980–10441

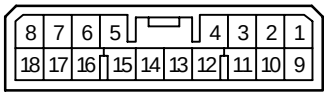

90980–10655
90980–11017

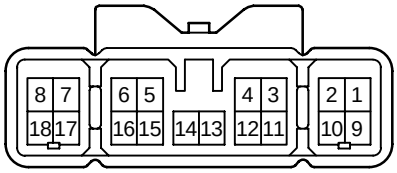

90980–10818

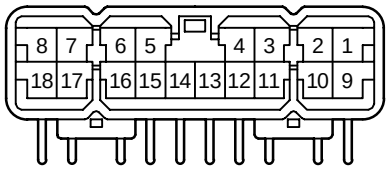

90980–10863

<MALE> 18P Non–waterproof Type

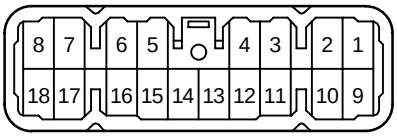

90980–10937
90980–11127

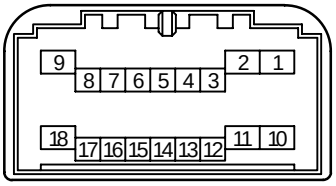

90980–11223

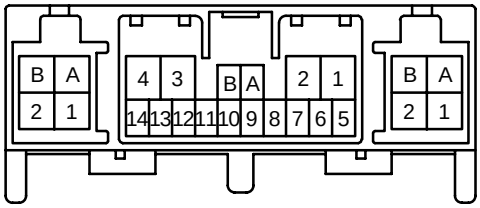

90980–11382

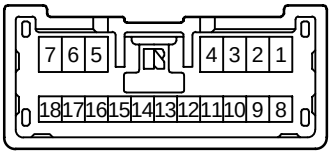

90980–11496

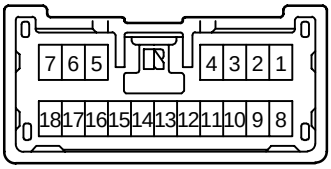

90980–11745

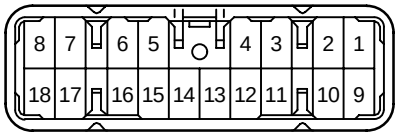

90980–11748

<MALE> 18P Non–waterproof Type

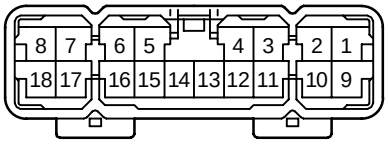

90980–11751

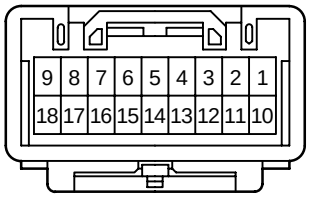

90980–11912

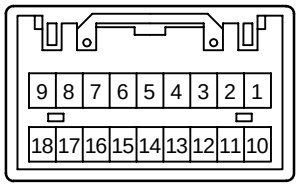

90980–11949

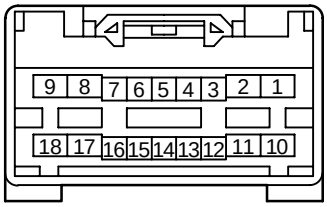

90980–12010

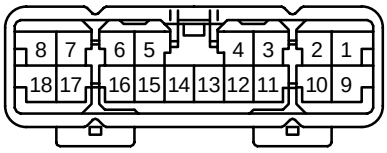

90980–12108

<MALE> 19P Non–waterproof Type

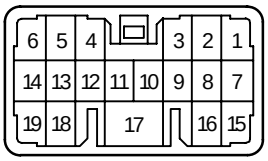

90980–10674

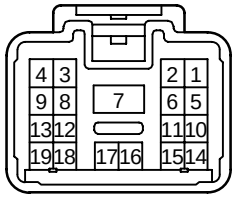

90980–10856

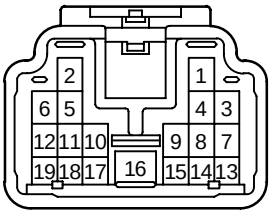

90980–10882

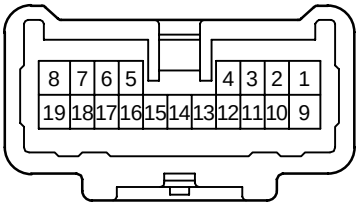

90980–11204

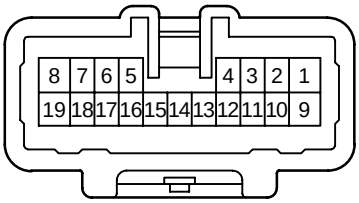

90980–11307

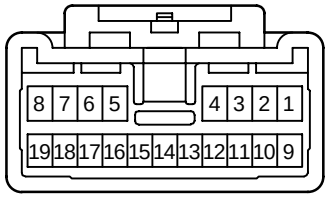

90980–11376

<MALE> 19P Non–waterproof Type

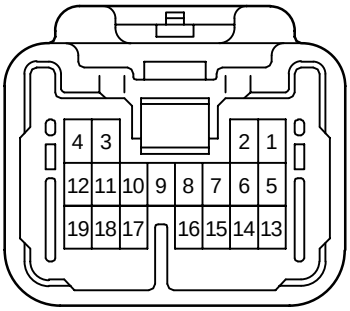

90980–11570

List of equivalent for the gold and tin–plated repair wire

Repair Wire Part No.	
Tin–plated (Sn)	Gold–plated (Au)
82998–12160 (2.3.M.U)	82998–24050
–12190 (1.8.F.U)	–12300
–12260 (2.3.M.S)	–24070
–12270 (2.3.F.S)	–24080
–12310 (1.0.F.U)	–12320
–12330 (2.3II.M.U)	–12350
–12340 (2.3II.F.U)	–12360
–12430 (2.3II.M.S)	–12450
–12440 (2.3II.F.S)	–12460
–12790 (2.3II.F.S)	–12780
–12670 (1.0III.M.U)	–12680
–12690 (1.0III.F.U)	–12700
–12720 (1.0III.F.S)	–12730
–24020 (1.0II.F.U)	–24110
–24090 (1.8II.M.U)	–24130

HOUSING PART NUMBER LIST

* Example : 82998–24050 indicates the gold–plated 82998–12160.

Part No. of Connector Body	Supply	Terminal	Male Female	Cav. No.	Sealing Ability	Part No. of Repair Wire		Sleeve Color	Memo
						160 mm Type	500 mm Type		
90980–						82998–	82998–		
10001	X	BHC	M	4	U	–	–	–	
10002	X	BHC	F	4	U	–	–	–	
10003	X	BHC	M	6	U	–	–	–	
10004	X	BHC	F	6	U	–	–	–	
10006	X	BHC	F	12	U	–	–	–	
10008	X	BHC	F	16	U	–	–	–	
10010	X	BHC	F	22	U	–	–	–	
10011	X	BHC	M	2	U	–	–	–	
10012	X	BHC	F	2	U	–	–	–	
10018	X	BHC	M	8	U	–	–	–	
10019	X	BHC	F	8	U	–	–	–	
10026	X	TODC	M	16	U	12080	–	L,Y	
10027	X	6.3 7.7	M	6 6	U	– 12010	– –	– Y	
10028	X	TODC	F	16	U	12090	–	L,Y	
10029	X	6.3 7.7	F	6 6	U	– 12020	– –	– Y	
10030	X	TODC	M	17	U	12080	–	L,Y	
10031	X	TODC	F	17	U	12090	–	L,Y	
10032	X	TODC	M	13	U	12080	–	L,Y	
10033	X	TODC	F	13	U	12090	–	L,Y	
10037	O	MIC	F	17	U	12120	–	L,Y	
10038	X	TODC	M	2	U	12080	–	L,Y	
10039	X	TODC	F	2	U	12090	–	L,Y	
10040	O	TODC	M	5	U	12080	–	L,Y	
10041	X	TODC	F	5	U	12090	–	L,Y	
10042	X	TODC	M	7	U	12080	–	L,Y	
10043	X	TODC	F	7	U	12090	–	L,Y	
10044	O	TODC	M	9	U	12080	–	L,Y	
10045	O	TODC	F	9	U	12090	–	L,Y	
10055	X	TODC	M	3	U	12080	–	L,Y	
10056	X	TODC	F	3	U	12090	–	L,Y	
10057	X	–	–	–	–	–	–	–	
10061	X	MIC	M	13	U	–	–	–	PCB
10062	O	MIC	F	13	U	12120	–	L,Y	
10063	X	MIC	M	21	U	–	–	–	PCB
10064	X	MIC	F	21	U	12120	–	L,Y	

HOUSING PART NUMBER LIST

Part No. of Connector Body	Supply	Terminal	Male Female	Cav. No.	Sealing Ability	Part No. of Repair Wire		Sleeve Color	Memo
						160 mm Type	500 mm Type		
90980–						82998–	82998–		
10065	X	TODC	M	15	U	12080	–	L,Y	
10066	X	TODC	F	15	U	12090	–	L,Y	
10068	X	TODC	M	9	U	–	–	–	PCB
10069	X	SL	F	2	U	12130	–	L,Y	
10070	O	SL	F	3	U	12130	–	L,Y	
10071	O	SL	F	7	U	12130	–	L,Y	
10072	X	6.3	F	3	U	12060	12580	Y	
10087	X	TODC	M	9	U	12080	–	L,Y	
10088	X	6.3	F	3	S	–	–	–	
10090	X	6.3	F	1	S	–	–	–	
10091	X	6.3	M	2	S	–	–	–	
10092	X	6.3	F	2	S	–	–	–	
10093	X	6.3	M	3	S	–	–	–	
10094	X	6.3	M	4	S	–	–	–	
10095	X	6.3	F	4	S	–	–	–	
10096	X	TODC	M	6	S	–	–	–	
10097	X	TODC	F	6	S	–	–	–	
10100	X	TODC	M	16	S	–	–	–	
10101	X	TODC	F	16	S	–	–	–	
10106	X	TODC	M	9	U	–	–	–	PCB
10108	X	SL	F	2	U	12130	–	L,Y	
10109	X	SL	F	2	U	12130	–	L,Y	
10110	X	6.3	F	3	S	–	–	–	
10111	X	FPC	F	3	U	–	–	–	
10112	X	FPC	F	8	U	–	–	–	
10113	X	FPC	F	8	U	–	–	–	
10114	O	7.7	M	1	S	–	–	–	
10115	O	7.7	F	1	S	–	–	–	
10116	X	6.3	F	2	S	–	–	–	
10117	X	TODC	M	5	U	12080	–	L,Y	
10119	X	FPC	F	8	U	–	–	–	
10121	X	TODC	F	2	U	12090	–	L,Y	
10122	X	7.7	M	2	S	–	–	–	
10123	X	7.7	F	2	S	–	–	–	
10124	X	6.3	F	2	U	–	–	–	
10125	X	TODC	M	1	S	–	–	–	
10126	X	TODC	M	4	U	12080	–	L,Y	
10127	X	TODC	F	4	U	12090	–	L,Y	
10130	X	TODC	M	5	U	–	–	–	PCB

HOUSING PART NUMBER LIST

Part No. of Connector Body	Supply	Terminal	Male Female	Cav. No.	Sealing Ability	Part No. of Repair Wire		Sleeve Color	Memo
						160 mm Type	500 mm Type		
90980– 10131	X	LAC	M	22	U	82998– 12100	82998– –	L,Y	
10132	O	LAC	F	13	U	12110	–	L,Y	
10133	X	LAC	F	9	U	12110	–	L,Y	
10138	X	MIC	M	13	U	–	–	–	PCB
10139	X	6.3	M	4	S	–	–	–	
10140	X	6.3	F	4	S	–	–	–	
10141	X	SL	F	2	U	12130	–	L,Y	
10142	X	6.3	F	4	U	–	–	–	
10143	X	FPC	F	3	U	–	–	–	
10144	X	6.3	M	4	U	–	–	–	
10145	X	6.3 7.7	M	3 3	U	– 12010	– –	– Y	
10146	X	6.3 7.7	F	2 1	U	– 12040	– –	– Y	
10147	X	TODC	M	8	U	12080	–	L,Y	
10148	X	TODC	F	8	U	12090	–	L,Y	
10149	X	TODC	M	12	U	12080	–	L,Y	
10150	X	TODC	F	12	U	12090	–	L,Y	
10151	X	MIC	M	22	U	–	–	–	PCB
10152	O	MIC	F	9	U	12120	–	L,Y	
10153	X	2.3	F	12	U	12170	–	L	
10154	X	6.3 7.7	M	3 3	U	– –	– –	– –	
10156	O	6.3	M	2	S	–	–	–	w/o Clamp
10157	O	6.3	F	2	S	–	–	–	
10158	X	FPC	F	10	U	–	–	–	
10159	X	FPC	F	10	U	–	–	–	
10160	X	7.7	M	1	U	12010	–	Y	
10161	X	6.3	M	5	S	–	–	–	w/o Clamp
10162	O	6.3	F	5	S	–	–	–	
10163	X	TODC	M	3	U	12080	–	L,Y	
10164	X	TODC	F	3	U	12090	–	L,Y	
10165	X	7.7	F	1	U	12020	–	Y	
10170	X	6.3	M	4	U	12050	–	Y	w/o Clamp
10171	O	6.3	F	4	U	12060	12580	Y	
10172	O	6.3	M	6	U	12050	–	Y	
10173	O	6.3	F	6	U	12060	12580	Y	
10174	O	6.3	M	8	U	12050	–	Y	
10175	O	6.3	F	8	U	12060	12580	Y	

HOUSING PART NUMBER LIST

Part No. of Connector Body	Supply	Terminal	Male Female	Cav. No.	Sealing Ability	Part No. of Repair Wire		Sleeve Color	Memo
						160 mm Type	500 mm Type		
90980– 10176	O	6.3	M	10	U	82998– 12050	82998– –	Y	
10177	O	6.3	F	10	U	12060	12580	Y	
10178	O	6.3	M	1	U	12050	–	Y	
10179	O	6.3	F	1	U	12060	12580	Y	
10182	O	TODC	M	1	U	12080	–	L,Y	
10183	O	TODC	F	1	U	12090	–	L,Y	
10184	X	TODC	F	2	S	–	–	–	
10185	X	7.7	F	2	U	12040	–	Y	
10186	X	6.3 7.7	M	2 1	U	12050 12030	– –	Y Y	
10187	X	6.3 7.7	M	2 1	U	12050 12030	– –	Y Y	
10188	X	6.3 7.7	M	2 1	U	12050 12030	– –	Y Y	
10189	X	6.3 7.7	F	2 1	U	12060 12040	12580 –	Y Y	
10190	X	EJ	M	3	S	–	–	–	
10191	X	EJ	F	3	S	–	–	–	
10192	X	EJ	M	2	S	–	–	–	
10193	X	EJ	F	2	S	–	–	–	
10194	X	TODC	M	6	S	–	–	–	
10195	X	TODC	F	6	S	–	–	–	
10196	X	6.3	F	4	U	12060	12580	Y	
10197	X	TODC	F	1	S	–	–	–	
10198	X	6.3 7.7	M	2 1	S	– –	– –	– –	
10199	X	6.3 7.7	F	2 1	S	– –	– –	– –	
10200	X	EJ	M	1	S	–	–	–	
10201	X	EJ	F	1	S	–	–	–	
10202	X	EJ	M	4	S	–	–	–	
10203	X	EJ	F	4	S	–	–	–	
10204	X	EJ	M	8	S	–	–	–	
10205	X	EJ	F	8	S	–	–	–	
10206	X	TODC	M	13	U	–	–	–	PCB
10207	X	TODC	F	21	U	12090	–	L,Y	
10208	X	6.3 TODC	M	8 8	U	– 12080	– –	– L,Y	w/ Flange

E

HOUSING PART NUMBER LIST

Part No. of Connector Body	Supply	Terminal	Male Female	Cav. No.	Sealing Ability	Part No. of Repair Wire		Sleeve Color	Memo
						160 mm Type	500 mm Type		
90980– 10209	X	6.3 TODC	F	2 6	U	82998– 12060 12090	82998– 12580 –	Y L,Y	
10210	X	6.3 TODC	M	2 6	U	12050 12080	– –	Y L,Y	w/o Clamp
10211	X	TODC	M	7	U	12080	–	L,Y	
10212	X	TODC	M	13	U	12080	–	L,Y	
10213	O	6.3	M	2	U	12050	–	Y	w/o Clamp
10214	O	6.3	F	2	U	12060	12580	Y	
10215	X	6.3	M	3	U	12050	–	Y	w/o Clamp
10216	O	6.3	F	3	U	12060	12580	Y	
10217	X	TODC	M	4	S	–	–	–	
10218	X	TODC	F	4	S	–	–	–	
10219	X	6.3	M	4	U	12050	–	Y	
10220	X	6.3	F	4	S	–	–	–	
10221	X	6.3	F	4	U	12060	12580	Y	
10222	X	6.3	F	3	U	12060	12580	Y	
10223	X	6.3	M	6	U	12050	–	Y	
10224	X	6.3	F	6	U	12060	12580	Y	
10225	X	6.3	M	8	U	12050	–	Y	
10228	X	HEAD-LAMP	F	3	U	24140	24200	L,Y	
10229	X	6.3	F	1	U	12060	12580	Y	
10231	X	6.3	M	3	U	12050	–	Y	
10232	X	6.3	F	3	U	12060	12580	Y	
10233	X	6.3 TODC	M	25 25	U	12050 12080	– –	Y L,Y	
10234	X	6.3	F	3	U	–	–	–	
10235	X	6.3 7.7	M	2 1	S	– –	– –	– –	
10236	X	6.3 7.7	F	2 1	S	– –	– –	– –	
10237	X	6.3	M	4	U	12050	–	Y	
10238	X	7.7	F	2	U	12020	–	Y	
10239	X	6.3	F	3	S	–	–	–	
10240	O	TODC	M	1	S	–	–	–	
10241	O	TODC	F	1	S	–	–	–	
10242	X	TODC	M	2	S	–	–	–	
10243	X	TODC	F	2	S	–	–	–	
10244	O	TODC	M	3	S	–	–	–	

HOUSING PART NUMBER LIST

Part No. of Connector Body	Supply	Terminal	Male Female	Cav. No.	Sealing Ability	Part No. of Repair Wire		Sleeve Color	Memo
						160 mm Type	500 mm Type		
90980–						82998–	82998–		
10245	X	TODC	F	3	S	–	–	–	
10246	O	6.3	M	1	S	–	–	–	
10247	O	6.3	F	1	S	–	–	–	
10248	X	6.3	M	3	S	–	–	–	w/o Clamp
10249	O	6.3	F	3	S	–	–	–	
10250	X	6.3	F	1	U	12060	12580	Y	
10251	X	6.3	M	1	U	12050	–	Y	w/o Clamp
10252	X	6.3	F	1	U	12060	12580	Y	
10253	X	6.3	M	1	U	12050	–	Y	
10254	X	6.3	F	1	U	12060	12580	Y	
10255	X	6.3	M	2	U	12050	–	Y	
10256	X	6.3	F	2	U	12060	12580	Y	
10257	X	6.3	M	3	U	12050	–	Y	w/o Clamp
10258	X	6.3	F	3	U	12060	12580	Y	
10259	X	6.3	M	4	U	12050	–	Y	
10260	X	6.3	F	4	U	12060	12580	Y	
10261	X	6.3	M	5	U	12050	–	Y	
10262	X	6.3	F	5	U	12060	12580	Y	
10263	X	6.3	M	7	U	12050	–	Y	
10264	X	6.3	F	7	U	12060	12580	Y	
10265	X	6.3	M	9	U	12050	–	Y	
10266	X	6.3	F	9	U	12060	12580	Y	
10267	X	MIC	M	9	U	–	–	–	PCB
10272	X	LC	M	8	U	–	–	–	
10273	X	LC	F	8	U	–	–	–	
10274	O	TODC	F	5	U	12090	–	L,Y	
10275	X	TODC	M	7	U	12080	–	L,Y	
10276	X	6.3	M	5	U	12050	–	Y	
10277	X	6.3	M	7	U	12050	–	Y	
10278	X	6.3	M	9	U	12050	–	Y	
10279	X	TODC	M	8	U	12080	–	L,Y	
10280	X	TODC	F	8	U	12090	–	L,Y	
10281	X	6.3 TODC	M	3 7	U	12050 12080	– –	Y L,Y	
10282	X	6.3 TODC	F	3 7	U	12060 12090	12580 –	Y L,Y	
10283	O	6.3	M	3	U	12050	–	Y	w/ Clamp
10284	X	TODC	M	18	U	12080	–	L,Y	
10285	X	TODC	F	18	U	12090	–	L,Y	

HOUSING PART NUMBER LIST

Part No. of Connector Body	Supply	Terminal	Male Female	Cav. No.	Sealing Ability	Part No. of Repair Wire		Sleeve Color	Memo
						160 mm Type	500 mm Type		
90980– 10286	X	TODC	M	2	U	82998– 12080	82998– –	L,Y	
10287	X	TODC	M	16	S	–	–	–	
10288	X	TODC	F	16	S	–	–	–	
10289	X	LC	M	6	U	–	–	–	
10290	X	LC	F	6	U	–	–	–	
10291	X	LC	M	14	U	–	–	–	
10292	X	LC	F	14	U	–	–	–	
10293	X	PULSE LOCK	M	52	U	–	–	–	PCB
10294	O	PULSE LOCK	F	10	U	12200	–	L,Y	
10295	O	PULSE LOCK	F	18	U	12210	–	L	
10296	O	PULSE LOCK	F	24	U	12210	–	L	
10297	X	TODC	M	2	U	12080	–	L,Y	
10298	X	TODC	F	2	U	12090	–	L,Y	
10299	X	6.3	M	3	U	12050	–	Y	
10300	X	6.3	M	3	U	12050	–	Y	w/ Flange
10301	X	MFPC	F	8	U	12150	–	L	
10302	O	MFPC	F	10	U	12150	–	L	
10303	O	MFPC	F	12	U	12150	–	L	
10304	X	MFPC	F	10	U	12150	–	L	
10305	X	6.3	M	2	U	12050	–	Y	w/ Clamp
10306	X	6.3 TODC	M	2 2	U	12050 12080	– –	Y L,Y	
10307	X	6.3 TODC	F	2 2	U	12060 12090	12580 –	Y L,Y	
10308	X	MIC	M	5	U	–	–	–	PCB
10309	X	MIC	F	5	U	12120	–	L,Y	
10310	X	MIC	M	7	U	–	–	–	PCB
10311	X	MIC	F	7	U	12120	–	L,Y	
10312	X	TODC	M	6	U	12080	–	L,Y	
10313	X	TODC	F	6	U	12090	–	L,Y	
10314	X	TODC	M	5	U	12080	–	L,Y	
10315	X	MODU	M	26	U	–	–	–	
10316	X	MODU	F	26	U	–	–	–	
10317	X	6.3 TODC	M	1 8	U	12050 12080	– –	Y L,Y	

HOUSING PART NUMBER LIST

Part No. of Connector Body	Supply	Terminal	Male Female	Cav. No.	Sealing Ability	Part No. of Repair Wire		Sleeve Color	Memo
						160 mm Type	500 mm Type		
90980–						82998–	82998–		
10318	X	6.3	F	1	U	12060	12580	Y	
		TODC		8		12090	–	L,Y	
10319	X	6.3	F	1	U	12060	12580	Y	
		TODC		10		12090	–	L,Y	
10320	X	2.3	F	2	U	12170	–	L	
10321	X	2.3	F	8	U	12170	–	L	
10322	O	2.3	F	10	U	12170	–	L	
10323	X	2.3	M	13	U	12160*	–	L	
10324	X	2.3	F	13	U	12170	–	L	
10325	O	2.3	M	18	U	12160*	–	L	
10326	O	2.3	F	18	U	12170	–	L	
10327	X	2.3	F	20	U	12170	–	L	
10328	X	2.3	F	22	U	12170	–	L	
10329	X	2.3	M	12	U	12160*	–	L	
		6.3		2		12050	–	Y	
10330	X	2.3	F	12	U	12170	–	L	
		6.3		2		12060	12580	Y	
10331	X	2.3	F	14	U	12170	–	L	
		6.3		1		12060	12580	Y	
10332	X	7.7	F	1	U	12040	–	Y	
10333	X	6.3	F	2	U	12060	12580	Y	
10334	X	6.3	F	6	U	12060	12580	Y	
10335	X	6.3	F	6	U	12060	12580	Y	
10336	X	6.3	F	8	U	12060	12580	Y	
10337	X	6.3	F	11	U	12060	12580	Y	
10338	X	6.3	F	11	U	12060	12580	Y	
10339	X	6.3	F	4	U	12060	12580	Y	
		7.7		1		12040	–	Y	
10340	X	6.3	F	2	U	12060	12580	Y	
		7.7		3		12040	–	Y	
10341	X	6.3	F	3	S	12540	–	Y	
10342	X	7.7	M	1	U	12030	–	Y	
10343	X	7.7	F	1	U	12040	–	Y	
10344	X	6.3	M	2	U	12050	–	Y	w/o Clamp
10345	X	6.3	F	2	U	12060	12580	Y	
10346	X	6.3	M	2	U	12050	–	Y	w/ Clamp
10347	O	6.3	M	3	S	12050	–	Y	w/ Clamp
10348	X	6.3	F	2	U	12060	12580	Y	

HOUSING PART NUMBER LIST

Part No. of Connector Body	Supply	Terminal	Male Female	Cav. No.	Sealing Ability	Part No. of Repair Wire		Sleeve Color	Memo
						160 mm Type	500 mm Type		
90980– 10349	X	PULSE LOCK	M	30	U	82998– –	82998– –	–	PCB
10350	X	PULSE LOCK	F	18	U	12200	–	L,Y	
10351	O	PULSE LOCK	F	12	U	12200	–	L,Y	
10352	X	TODC	F	2	S	–	–	–	
10353	O	TODC	F	3	S	–	–	–	
10354	X	2.3	M	2	U	12160*	–	L	w/o Clamp
10355	O	2.3	F	2	U	12170	–	L	
10356	O	7.7	M	2	U	12030	–	Y	
10357	O	7.7	F	2	U	12040	–	Y	
10358	X	6.3	F	8	U	12060	12580	Y	
10359	O	6.3	F	1	U	12060	12580	Y	
10360	X	2.3	M	8	U	12160*	–	L	
10361	X	2.3	M	20	U	12160*	–	L	
10362	O	SP	F	2	U	12530	–	L,Y	
10363	X	5.2	F	1	U	–	–	–	
10364	X	2.3	M	3	U	12160*	–	L	w/o Clamp
10365	O	2.3	F	3	U	12170	–	L	
10366	O	2.3	M	6	U	12160*	–	L	w/o Clamp
10367	O	2.3	F	6	U	12170	–	L	
10368	X	MFPC	F	14	U	12150	–	L	
10369	O	MFPC	F	14	U	12150	–	L	
10370	X	PULSE LOCK	M	42	U	–	–	–	PCB
10371	O	PULSE LOCK	F	14	U	12210	–	L	
10372	X	MFPC	F	12	U	12150	–	L	
10373	X	7.7 TODC	F	2 2	S	– –	– –	– –	
10374	X	7.7	M	2	S	–	–	–	
10375	X	2.3	M	10	U	12160*	–	L	w/o Flange
10376	X	SP SP	F	5 5	U	12520 12530	– –	L,Y L,Y	
10377	X	SP	F	10	U	12530	–	L,Y	
10378	O	MIC	F	4	U	12120	–	L,Y	
10379	X	TODC	M	9	S	–	–	–	
10380	X	TODC	F	9	S	–	–	–	w/o Clamp
10381	X	TODC	F	9	S	–	–	–	w/ Clamp

E

HOUSING PART NUMBER LIST

Part No. of Connector Body	Supply	Terminal	Male Female	Cav. No.	Sealing Ability	Part No. of Repair Wire		Sleeve Color	Memo
						160 mm Type	500 mm Type		
90980–						82998–	82998–		
10382	X	6.3	F	4	U	12060	12580	Y	
		7.7		2		12040	–	Y	
10383	X	6.3	M	2	U	–	–	–	w/ Flange
		TODC		6		12080	–	L,Y	
10384	O	2.3	M	6	U	12160*	–	L	w/o Flange
10385	X	7.7	F	2	U	12040	–	Y	
10386	X	6.3	F	9	U	12060	12580	Y	
10392	X	TLC	M	3	S	12280	–	R	
		TODC		2		–	–	–	
10393	X	TLC	F	3	S	12290	–	R	
		TODC		2		–	–	–	
10394	X	TLC	M	3	S	12280	–	R	w/ Clamp
10395	X	TLC	F	3	S	12290	–	R	
10396	X	TLC	M	1	U	12220	–	L	
10397	X	2.3	F	12	U	12170	–	L	
10398	X	TLC	F	1	U	12230	–	L	
10399	O	TLC	M	4	U	12220	–	L	
10400	X	TLC	F	4	U	12230	–	L	
10401	O	TLC	M	6	U	12220	–	L	
10402	O	TLC	F	6	U	12230	–	L	
10403	X	TLC	M	6	U	12220	–	L	
		TODC		2		12080	–	L,Y	
10404	X	TLC	F	6	U	12230	–	L	
		TODC		2		12090	–	L,Y	
10405	X	2.3	M	6	U	12160*	–	L	
		TLC		6		12220	–	L	
10406	X	2.3	F	6	U	12170	–	L	
		TLC		6		12230	–	L	
10407	X	TLC	M	12	U	12220	–	L	
10408	X	TLC	F	12	U	12230	–	L	
10410	X	6.3	M	3	U	12050	–	Y	w/ Clamp
10411	X	6.3	M	2	U	12050	–	Y	w/ Clamp
		TODC		6		12080	–	L,Y	
10412	X	6.3	M	2	S	–	–	–	w/ Clamp
10413	X	2.3	M	18	U	12160*	–	L	
10414	O	2.3	F	6	U	12170	–	L	
10415	X	2.3	M	10	U	12160*	–	L	
		6.3		2		12050	–	Y	
10416	X	2.3	M	6	U	–	–	–	PCB

HOUSING PART NUMBER LIST

Part No. of Connector Body	Supply	Terminal	Male Female	Cav. No.	Sealing Ability	Part No. of Repair Wire		Sleeve Color	Memo
						160 mm Type	500 mm Type		
90980– 10417	X	2.3	M	10	U	82998– –	82998– –	–	PCB
10418	X	2.3 TODC	M	6 2	U	12160* 12080	– –	L L,Y	
10419	X	2.3 TODC	F	6 2	U	12170 12090	– –	L L,Y	
10420	X	2.3	F	3	U	12170	–	L	
10421	X	2.3 6.3	F	10 2	U	12170 12060	– 12580	L Y	
10422	X	2.3 6.3	M	12 2	U	12160* 12050	– –	L Y	
10423	X	MIC	F	2	U	12120	–	L,Y	
10424	X	6.3	M	2	U	12050	–	Y	
10425	X	6.3	F	2	U	12060	12580	Y	
10426	X	MIC	F	2	U	12120	–	L,Y	
10427	X	2.3	M	10	U	12160*	–	L	w/ Flange
10428	O	HEAD-LAMP	F	3	U	24140	24200	L,Y	
10429	X	PULSE LOCK	M	24	U	–	–	–	PCB
10430	X	TLC	M	8	U	12220	–	L	
10431	X	TLC	F	8	U	12230	–	L	
10432	O	2.3	F	12	U	12170	–	L	
10433	X	2.3	M	1	U	12160*	–	L	w/o Clamp
10434	X	2.3	M	1	U	12160*	–	L	w/ Clamp
10435	X	2.3	F	1	U	12170	–	L	
10436	X	2.3	M	12	U	–	–	–	PCB
10437	O	2.3	M	2	U	12160*	–	L	w/ Clamp
10438	X	2.3	M	1	S	12260*	–	L	
10439	X	2.3	F	1	S	12270*	12600	L	
10440	X	2.3	M	12	U	–	–	–	PCB
10441	X	2.3	M	18	U	–	–	–	PCB
10442	X	1.8 6.3	M	12 3	U	12180 12050	– –	L Y	
10443	X	1.8 6.3	F	12 3	U	12190* 12060	– 12580	L Y	
10444	X	TLC	M	3	S	12280	–	R	w/o Clamp
10445	X	TODC	M	13	U	–	–	–	PCB
10446	X	6.3 7.7	M	4 2	U	12050 12030	– –	Y Y	

HOUSING PART NUMBER LIST

Part No. of Connector Body	Supply	Terminal	Male Female	Cav. No.	Sealing Ability	Part No. of Repair Wire		Sleeve Color	Memo
						160 mm Type	500 mm Type		
90980–						82998–	82998–		
10447	O	6.3	F	4	U	12060	12580	Y	
		7.7		2		12040	–	Y	
10448	X	6.3 II	M	4	U	–	–	–	
10449	X	6.3 II	F	8	U	24170	–	Y	
10450	X	6.3 II	F	11	U	24170	–	Y	
10451	X	6.3	M	7	U	12050	–	Y	
10452	X	6.3	F	7	U	12060	12580	Y	
10453	X	2.3	M	12	U	12160*	–	L	
		6.3		4		12050	–	Y	
10454	X	2.3	F	12	U	12170	–	L	
		6.3		4		12060	12580	Y	
10455	X	TLC	M	22	U	12220	–	L	
10456	X	TLC	F	22	U	12230	–	L	
10457	X	2.3	M	19	U	12160*	–	L	
		6.3		3		12050	–	Y	
10458	X	2.3	F	19	U	12170	–	L	
		6.3		3		12060	12580	Y	
10459	X	TLC	M	7	U	–	–	–	PCB
10460	X	TLC	F	7	U	12230	–	L	
10461	X	TODC	M	15	U	12080	–	L,Y	
10462	X	2.3	M	5	U	12160*	–	L	
		6.3		3		12050	–	Y	
10463	O	2.3	F	5	U	12170	–	L	
		6.3		3		12060	12580	Y	
10464	X	TODC	F	3	U	12090	–	L,Y	
10465	X	2.3	F	2	U	12170	–	L	
10466	X	TNS	M	4	U	12240	–	L	
10467	O	TNS	F	4	U	12250	–	L	
10468	X	TNS	M	10	U	12240	–	L	
10469	X	TNS	F	10	U	12250	–	L	
10470	O	TNS	M	14	U	12240	–	L	
10471	O	TNS	F	14	U	12250	–	L	
10472	X	2.3	M	12	U	12160*	–	L	
		TNS		9		12240	–	L	
10473	X	2.3	F	12	U	12170	–	L	
		TNS		9		12250	–	L	
10474	O	2.3	F	2	S	12270*	12600	L	
10475	O	2.3	M	4	S	12260*	–	L	
10476	O	2.3	F	4	S	12270*	12600	L	

HOUSING PART NUMBER LIST

Part No. of Connector Body	Supply	Terminal	Male Female	Cav. No.	Sealing Ability	Part No. of Repair Wire		Sleeve Color	Memo
						160 mm Type	500 mm Type		
90980– 10477	X	2.3	M	6	S	82998– 12260*	82998– –	L	
10478	X	2.3	F	6	S	12270*	12600	L	
10479	X	2.3 6.3	M	12 1	U	12160* 12050	– –	L Y	
10480	X	2.3 6.3	F	12 1	U	12170 12060	– 12580	L Y	
10481	O	6.3	F	2	U	12060	12580	Y	
10482	X	2.3	F	2	U	12170	–	L	
10483	X	2.3	F	3	U	12170	–	L	
10484	X	2.3	F	4	U	12170	–	L	
10485	X	2.3 TODC	M	10 6	U	12160* 12080	– –	L L,Y	
10486	X	2.3 TODC	F	10 6	U	12170 12090	– –	L L,Y	
10487	O	FTC	F	5	U	12510	–	L,Y	
10488	O	FTC	F	5	U	12510	–	L,Y	
10489	O	FTC	F	3	U	12510	–	L,Y	
10490	O	FTC	F	3	U	12510	–	L,Y	
10491	X	MIC	F	2	U	12120	–	L,Y	
10492	X	2.3	M	3	S	12260*	–	L	w/o Clamp
10493	X	2.3	M	3	S	12260*	–	L	w/ Clamp
10494	X	2.3	F	3	S	12270*	12600	L	
10495	O	2.3	M	2	S	12260*	–	L	
10496	O	2.3	F	2	S	12270*	12600	L	
10497	X	2.3	M	2	S	12260*	–	L	
10498	O	2.3	F	2	S	12270*	12600	L	
10499	X	6.3	M	1	U	12050	–	Y	w/ Clamp
10500	X	2.3	M	3	S	12260*	–	L	
10501	X	2.3	F	3	S	12270*	12600	L	
10502	X	2.3	M	4	U	12160*	–	L	
10503	X	2.3	M	4	U	12160*	–	L	
10504	O	2.3	F	4	U	12170	–	L	
10505	X	2.3	M	6	U	12160*	–	L	w/ Clamp
10506	X	2.3	M	14	U	–	–	–	PCB
10507	X	2.3	F	14	U	12170	–	L	
10508	X	2.3	M	20	U	–	–	–	PCB
10509	X	TODC	F	5	U	12090	–	L,Y	
10510	X	TNS	M	4	S	–	–	–	w/o Clamp
10511	X	TNS	F	2	U	12250	–	L	

HOUSING PART NUMBER LIST

Part No. of Connector Body	Supply	Terminal	Male Female	Cav. No.	Sealing Ability	Part No. of Repair Wire		Sleeve Color	Memo
						160 mm Type	500 mm Type		
90980–10512	X	TNS	F	2	U	82998–12250	82998– –	L	
10513	O	2.3	M	12	U	12160*	–	L	
10514	X	2.3 6.3	F	2 2	U	12170 12060	– 12580	L Y	
10515	X	2.3	F	4	U	12170	–	L	
10516	X	2.3	M	10	U	–	–	–	PCB
10517	X	2.3 6.3 7.7	F	4 2 2	U	12170 12060 12040	– 12580 –	L Y Y	
10518	X	2.3 6.3	M	4 1	U	12160* 12050	– –	L Y	
10519	X	2.3 6.3	M	4 1	U	12160* 12050	– –	L Y	
10520	X	2.3 6.3	F	4 1	U	12170 12060	– 12580	L Y	
10521	X	2.3 7.7	M	15 1	U	12160* 12030	– –	L Y	
10522	X	2.3 7.7	F	15 1	U	12170 12040	– –	L Y	
10523	X	TNS	F	8	U	12250	–	L	
10524	X	TNS	F	12	U	12250	–	L	
10525	X	TNS	F	16	U	12250	–	L	
10526	O	TNS	F	22	U	12250	–	L	
10527	X	TLC	M	10	U	–	–	–	PCB
10528	O	TLC	F	10	U	12230	–	L	
10529	X	TLC	M	12	U	–	–	–	PCB
10530	X	2.3 6.3	F	17 1	U	12170 12060	– 12580	L Y	
10531	X	2.3	M	11	U	12160*	–	L	
10532	O	2.3	F	2	S	12270*	12600	L	
10533	X	2.3	M	2	S	12260*	–	L	
10534	X	2.3	F	2	S	12270*	12600	L	
10535	X	2.3	M	3	U	–	–	–	PCB
10536	X	2.3 6.3	F	8 1	U	12170 12060	– 12580	L Y	
10537	X	2.3 6.3	F	10 1	U	12170 12060	– 12580	L Y	
10538	X	2.3	F	14	U	12170	–	L	
10539	X	2.3	F	16	U	12170	–	L	

HOUSING PART NUMBER LIST

Part No. of Connector Body	Supply	Terminal	Male Female	Cav. No.	Sealing Ability	Part No. of Repair Wire		Sleeve Color	Memo
						160 mm Type	500 mm Type		
90980– 10542	X	2.3	M	16	U	82998– 12160*	82998– –	L	
10543	X	2.3	F	16	U	12170	–	L	
10544	X	2.3	M	3	U	12160*	–	L	
10545	X	2.3 6.3	M	12 2	U	12160* 12050	– –	L Y	
10546	X	TLC	M	8	U	12220	–	L	
10547	X	2.3 6.3 7.7	M	12 2 2	S	12260* – –	– – –	L – –	
10548	X	2.3	F	12	S	12270*	12600	L	
10549	X	6.3 7.7	F	2 2	S	– –	– –	– –	
10550	X	2.3 6.3	F	3 2	S	12270* –	12600 –	L –	
10551	X	6.3	F	4	S	–	–	–	
10552	O	TNS	M	22	U	12240	–	L	
10553	X	TLC	M	3	S	12280	–	R	w/ Clamp
10554	O	TLC	F	3	S	12290	–	R	
10555	X	2.3	M	2	S	12260*	–	L	
10556	X	2.3	F	2	S	12270*	12600	L	
10557	X	TLC	M	5	S	12280	–	R	w/ Clamp
10558	X	TLC	F	5	S	12290	–	R	
10559	X	7.7	F	2	U	12040	–	Y	
10560	X	2.3	M	16	U	12160*	–	L	
10561	X	2.3	F	16	U	12170	–	L	
10562	X	2.3 6.3 7.7	M	12 2 1	U	12160* 12050 12030	– – –	L Y Y	
10563	X	2.3 6.3 7.7	F	12 2 1	U	12170 12060 12040	– 12580 –	L Y Y	
10564	X	1.8	M	12	U	12180	–	L	
10565	X	1.8	F	12	U	12190*	–	L	
10566	X	6.3	M	2	S	–	–	–	
10567	X	6.3	F	2	S	12540	–	Y	
10568	X	TODC	M	12	S	–	–	–	
10569	X	TODC	F	12	S	–	–	–	
10570	X	TLC	M	5	S	12280	–	R	w/o Clamp
10571	X	2.3	M	2	S	12260*	–	L	

HOUSING PART NUMBER LIST

Part No. of Connector Body	Supply	Terminal	Male Female	Cav. No.	Sealing Ability	Part No. of Repair Wire		Sleeve Color	Memo
						160 mm Type	500 mm Type		
90980–10572	O	2.3	F	2	S	82998–12270*	82998–12600	L	
10573	O	2.3	M	3	U	12160*	–	L	w/ Clamp
10574	X	HEAD-LAMP	F	3	S	24150	24190	L,Y	
10575	O	2.3	M	2	S	12260*	–	L	
10576	X	2.3	F	2	S	12270*	12600	L	
10577	O	TLC	M	3	S	12280	–	R	w/ Clamp
10578	X	2.3	F	2	S	12270*	12600	L	
10579	X	HEAD-LAMP	F	3	S	24150	24190	L,Y	
10580	O	2.3	M	2	S	12260*	–	L	
10581	X	2.3	F	2	S	12270*	12600	L	
10582	X	2.3	M	2	S	12260*	–	L	
10583	X	2.3	F	2	S	12270*	12600	L	
10584	X	TNS	M	38	U	–	–	–	PCB
10585	X	TNS	F	24	U	12250	–	L	
10586	X	TNS	M	26	U	–	–	–	PCB
10587	O	TNS	F	26	U	12250	–	L	
10588	X	TNS	M	20	U	–	–	–	PCB
10589	X	TNS	F	20	U	12250	–	L	
10590	O	2.3	M	4	S	12260*	–	L	
10591	X	2.3	F	4	S	12270*	12600	L	
10592	O	2.3	M	2	S	12260*	–	L	
10593	X	2.3	F	2	S	12270*	12600	L	
10594	X	2.3	M	2	S	12260*	–	L	
10595	X	2.3	F	2	S	12270*	12600	L	
10596	X	2.3	M	6	S	12260*	–	L	
10597	X	2.3	F	6	S	12270*	12600	L	
10598	O	2.3	F	2	S	12270*	12600	L	
10599	O	TNS	M	26	U	12240	–	L	
10600	X	2.3	M	4	U	12160*	–	L	
10601	O	2.3	F	4	U	12170	–	L	
10602	X	2.3	M	6	U	12160*	–	L	
10603	X	2.3	M	6	U	12160*	–	L	
10604	X	2.3	F	6	U	12170	–	L	
10605	X	2.3	F	6	U	12170	–	L	
10606	X	1.8	M	34	U	12180	–	L	
10607	X	1.8	F	20	U	12190*	–	L	
10608	X	1.8	F	14	U	12190*	–	L	
10609	O	2.3	F	2	S	12270*	12600	L	

HOUSING PART NUMBER LIST

Part No. of Connector Body	Supply	Terminal	Male Female	Cav. No.	Sealing Ability	Part No. of Repair Wire		Sleeve Color	Memo
						160 mm Type	500 mm Type		
90980–						82998–	82998–		
10610	X	2.3	F	1	U	12170	–	L	
		TNS		4		12250	–	L	
10611	X	2.3	F	8	U	12170	–	L	
		TNS		8		12250	–	L	
10612	X	2.3	F	10	U	12170	–	L	
		TNS		10		12250	–	L	
10613	X	TNS	F	16	U	12250	–	L	
10614	X	TNS	F	16	U	12250	–	L	
10615	X	TODC	M	7	U	–	–	–	PCB
10616	X	6.3	F	4	S	12540	–	Y	
10617	X	2.3	F	2	S	12270*	12600	L	
10618	X	6.3	F	2	U	12060	12580	Y	
		7.7		1		12040	–	Y	
10619	O	6.3	F	1	U	12060	12580	Y	
10620	X	TLC	M	2	U	12220	–	L	
10621	X	TLC	F	2	U	12230	–	L	
10622	X	2.3	F	2	S	12270*	12600	L	
10623	X	2.3	F	2	S	12270*	12600	L	
10624	X	2.3	F	5	S	12270*	12600	L	
10625	X	2.3	M	2	S	12260*	–	L	w/ Clamp
10626	X	2.3	F	2	S	12270*	12600	L	
10627	X	TLC	M	7	S	12280	–	R	
10628	X	TLC	F	7	S	12290	–	R	
10629	X	2.3	F	3	S	12270*	12600	L	
10630	X	2.3	M	18	U	–	–	–	PCB
10631	X	2.3	F	5	U	12170	–	L	
10632	X	2.3	F	12	U	12170	–	L	
10633	X	TLC	F	14	U	12230	–	L	
10634	X	TLC	F	14	U	12230	–	L	
10635	X	TLC	F	16	U	12230	–	L	
10636	X	TLC	F	16	U	12230	–	L	
10637	X	2.3	F	2	U	12170	–	L	
10638	X	2.3	F	3	U	12170	–	L	
10639	X	2.3	M	20	U	12160*	–	L	
10640	X	2.3	F	20	U	12170	–	L	
10641	X	2.3	M	6	U	12160*	–	L	w/ Flange
10642	X	2.3	M	5	S	–	–	–	PCB
10643	X	2.3	F	6	S	12270*	12600	L	
10644	X	2.3	F	5	U	12170	–	L	

HOUSING PART NUMBER LIST

Part No. of Connector Body	Supply	Terminal	Male Female	Cav. No.	Sealing Ability	Part No. of Repair Wire		Sleeve Color	Memo
						160 mm Type	500 mm Type		
90980– 10645	O	MFPC	F	4	U	82998– 12150	82998– –	L	
10646	X	6.3	M	4	S	–	–	–	
10647	X	6.3	M	5	S	–	–	–	w/ Clamp
10648	O	2.3	M	4	S	12260*	–	L	
10649	X	2.3	F	4	S	12270*	12600	L	
10650	O	2.3	M	6	S	12260*	–	L	w/ Clamp
10651	X	2.3	F	6	S	12270*	12600	L	
10652	X	7.7	F	1	U	12040	–	Y	
10653	X	1.8	M	13	S	–	–	–	
10654	X	1.8	F	13	S	12620	–	L	
10655	X	1.8	M	18	U	–	–	–	PCB
10656	X	1.8	F	18	U	12190*	–	L	
10657	X	1.8	M	30	U	–	–	–	PCB
10658	O	1.8	F	12	U	12190*	–	L	
10659	X	FTC	F	5	U	12510	–	L,Y	
10660	X	2.3	F	3	U	12170	–	L	
10661	X	TNS	M	14	U	–	–	–	PCB
10662	X	TNS	M	4	S	–	–	–	
10663	X	TNS	F	4	S	–	–	–	Outer
10664	X	TNS	F	4	S	–	–	–	Inner
10665	X	2.3	M	2	S	12260*	–	L	
10666	X	2.3	M	10	U	–	–	–	PCB
10667	X	2.3	M	10	U	–	–	–	PCB
10668	X	2.3	M	10	U	–	–	–	PCB
10669	O	2.3	F	10	U	12170	–	L	
10670	X	2.3	M	6	U	–	–	–	PCB
10671	X	2.3	M	6	U	–	–	–	PCB
10672	O	2.3	F	6	U	12170	–	L	
10673	X	6.3 7.7	F	4 2	U	12060 12040	12580 –	Y Y	
10674	X	2.3 6.3	M	18 1	U	12160* 12050	– –	L Y	
10675	X	2.3 6.3	F	18 1	U	12170 12060	– 12580	L Y	
10676	X	TLC	M	7	S	12280	–	R	
10677	X	TLC	M	9	S	12280	–	R	
10678	X	TLC	F	9	S	12290	–	R	
10679	O	2.3	F	2	U	12170	–	L	
10680	X	TLC	M	10	U	–	–	–	PCB

HOUSING PART NUMBER LIST

Part No. of Connector Body	Supply	Terminal	Male Female	Cav. No.	Sealing Ability	Part No. of Repair Wire		Sleeve Color	Memo
						160 mm Type	500 mm Type		
90980– 10681	X	TNS	M	20	U	82998– –	82998– –	–	PCB
10682	X	TNS	M	3	S	–	–	–	
10683	X	TNS	F	3	S	–	–	–	
10684	X	TNS	F	3	S	–	–	–	
10685	X	2.3 6.3	F	2 2	S	12270* 12540	12600 –	L Y	
10686	O	2.3 6.3	F	7 2	S	12270* 12540	12600 –	L Y	
10687	X	2.3	M	2	U	12160*	–	L	
10688	X	5.2	F	1	U	–	–	–	
10689	X	2.3	M	3	S	12260*	–	L	
10690	X	2.3	F	3	S	12270*	12600	L	
10691	X	TNS	M	4	U	–	–	–	PCB
10692	X	TNS	F	4	U	12250	–	L	
10693	X	2.3	M	10	U	12160*	–	L	
10694	X	2.3	M	6	U	12160*	–	L	
10695	X	2.3	F	3	S	12270*	12600	L	
10696	O	1.8	F	20	U	12190*	–	L	
10697	O	1.8	F	14	U	12190*	–	L	
10698	X	TLC	M	3	S	12280	–	R	
10699	X	TLC	M	10	U	–	–	–	PCB
10700	X	6.3	M	2	U	12050	–	Y	
10701	X	6.3	F	4	S	12540	–	Y	
10702	O	2.3	F	2	S	12270*	12600	L	
10703	X	6.3	F	1	U	12060	12580	Y	
10704	X	6.3	F	3	U	12060	12580	Y	
10705	X	6.3	F	1	S	–	–	–	
10706	O	2.3	F	2	S	12270*	12600	L	
10707	X	2.3	M	2	S	12260*	–	L	
10708	X	6.3	F	3	S	–	–	–	
10709	X	2.3 TLC	M	2 3	S	12260* 12280	– –	L R	
10710	X	2.3 TLC	F	2 3	S	12270* 12290	12600 –	L R	
10711	O	1.8	F	4	S	12620	–	L	
10712	X	2.3	F	5	S	12270*	12600	L	
10713	X	6.3 7.7	F	3 2	U	12060 12040	12580 –	Y Y	

HOUSING PART NUMBER LIST

Part No. of Connector Body	Supply	Terminal	Male Female	Cav. No.	Sealing Ability	Part No. of Repair Wire		Sleeve Color	Memo
						160 mm Type	500 mm Type		
90980– 10714	X	2.3 6.3	F	9 3	U	82998– 12170 12060	82998– – 12580	L Y	
10715	X	2.3	M	14	U	12160*	–	L	
10716	X	2.3	F	4	U	12170	–	L	
10717	X	2.3	F	4	U	12170	–	L	
10718	X	6.3	F	5	U	12060	12580	Y	
10719	O	TLC	M	10	U	12220	–	L	
10720	O	2.3	F	2	S	12270*	12600	L	
10721	X	2.3	F	10	U	12170	–	L	
10722	X	1.8	M	34	U	12180	–	L	
10723	X	2.3	F	11	U	12170	–	L	
10724	X	2.3	F	12	U	12170	–	L	
10725	X	2.3	F	12	U	12170	–	L	
10726	X	PULSE LOCK	M	30	U	–	–	–	PCB
10727	X	2.3 6.3	F	9 2	U	12170 12060	– 12580	L Y	
10728	X	2.3 6.3	M	5 2	U	– –	– –	– –	PCB
10729	X	2.3 6.3	F	5 2	U	12170 12060	– 12580	L Y	
10730	X	2.3	M	17	U	12160*	–	L	
10731	X	2.3	F	17	U	12170	–	L	
10732	X	TNS	M	14	U	–	–	–	PCB
10733	X	TNS	M	20	U	–	–	–	PCB
10734	X	1.8	F	2	S	12620	–	L	
10735	X	1.8	F	2	S	12620	–	L	
10736	X	1.8	F	2	S	12620	–	L	
10737	O	1.8	F	2	S	12620	–	L	
10738	X	1.8 1.0	M	16 48	U	– –	– –	– –	PCB
10739	X	1.8 1.0	F	10 16	U	12190* 12310*	– –	L L	
10740	X	1.0	F	16	U	12310*	–	L	
10741	X	1.8 1.0	F	6 16	U	12190* 12310*	– –	L L	
10742	X	1.8	M	42	U	–	–	–	PCB
10743	O	1.8	F	12	U	12190*	–	L	
10744	X	2.3	M	16	U	–	–	–	PCB

HOUSING PART NUMBER LIST

Part No. of Connector Body	Supply	Terminal	Male Female	Cav. No.	Sealing Ability	Part No. of Repair Wire		Sleeve Color	Memo
						160 mm Type	500 mm Type		
90980– 10745	X	2.3	M	6	U	82998– –	82998– –	–	PCB
10747	X	8.0	F	3	U	12400	–	Y	
10748	X	2.3	F	2	S	12270*	12600	L	
10749	O	4.8 2.3 II	M	2 2	S	12470 12430*	– –	Y L,Y	
10750	X	TNS	M	26	U	12240	–	L	
10751	X	2.3	M	4	S	12260*	–	L	w/ Clamp
10752	X	1.8	M	30	U	–	–	–	PCB
10753	X	2.3	M	16	U	–	–	–	PCB
10758	X	6.3	M	4	U	12050	–	Y	w/ Clamp
10759	X	6.3 7.7	F	2 2	U	12060 12040	12580 –	Y Y	
10760	X	5.2 6.3	F	1 1	U	– 12060	– 12580	– Y	
10761	X	1.8 1.0	M	16 48	U	– –	– –	– –	PCB
10762	X	2.3	M	5	U	12160*	–	L	
10763	O	1.8 1.0	F	10 16	U	12190* 12310*	– –	L L	
10764	O	1.0	F	16	U	12310*	–	L	
10765	O	1.8 1.0	F	6 16	U	12190* 12310*	– –	L L	
10766	X	6.3 7.7	F	4 2	U	12060 12040	12580 –	Y Y	
10767	X	2.3 II	M	14	U	–	–	–	PCB
10768	X	2.3	M	4	S	12260*	–	L	w/o Clamp
10769	X	2.3	M	8	U	–	–	–	PCB
10770	X	PULSE LOCK	M	24	U	–	–	–	PCB
10771	X	2.3 6.3	M	5 2	U	– –	– –	– –	PCB
10772	X	2.3 6.3	F	5 2	U	12170 12060	– 12580	L Y	
10773	X	1.8 1.0	M	16 48	U	– –	– –	– –	PCB
10774	X	2.3	M	3	S	12260*	–	L	w/ Clamp
10775	X	TODC	M	9	S	–	–	–	
10776	X	TODC	F	9	S	–	–	–	
10777	X	TLC	M	3	S	12280	–	R	w/ Clamp

HOUSING PART NUMBER LIST

Part No. of Connector Body	Supply	Terminal	Male Female	Cav. No.	Sealing Ability	Part No. of Repair Wire		Sleeve Color	Memo
						160 mm Type	500 mm Type		
90980–						82998–	82998–		
		2.3		2	S	12270*	12600	L	
10778	X	2.3	F	15	U	12170	–	L	
		6.3		1		12060	12580	Y	
10779	X	TNS	M	24	U	12240	–	L	
10780	X	1.8	M	16	U	–	–	–	PCB
		1.0		48		–	–	–	
10781	X	MIC	F	11	U	12120	–	L,Y	
10782	X	7.7	F	1	U	12040	–	Y	
10783	X	7.7	F	2	U	12040	–	Y	
10784	X	6.3	F	2	U	12060	12580	Y	
		7.7		1		12040	–	Y	
10785	X	2.3	F	6	U	12170	–	L	
10786	O	6.3	F	1	U	12070	–	Y	
10787	X	2.3	M	3	S	12260*	–	L	w/ Clamp
10788	X	2.3	M	2	S	12260*	–	L	w/ Clamp
10789	O	2.3 II	F	5	U	12340*	–	L,Y	
10790	X	2.3 II	M	5	U	–	–	–	PCB
10791	X	2.3	M	2	U	12160*	–	L	
		6.3		2		12050	–	Y	
10792	O	6.3	F	1	U	12060	12580	Y	
10793	X	2.3 II	M	6	U	–	–	–	PCB
10794	O	2.3 II	M	4	U	12330*	–	L,Y	
10795	O	2.3 II	F	4	U	12340*	–	L,Y	
10796	O	2.3 II	M	6	U	12330*	–	L,Y	
10797	O	2.3 II	F	6	U	12340*	–	L,Y	
10798	O	2.3 II	M	8	U	12330*	–	L,Y	
10799	O	2.3 II	F	8	U	12340*	–	L,Y	
10800	O	2.3 II	M	10	U	12330*	–	L,Y	
10801	O	2.3 II	F	10	U	12340*	–	L,Y	
10802	O	2.3 II	M	12	U	12330*	–	L,Y	
10803	O	2.3 II	F	12	U	12340*	–	L,Y	
10804	O	2.3 II	M	13	U	12330*	–	L,Y	
10805	O	2.3 II	F	13	U	12340*	–	L,Y	
10806	O	2.3 II	M	14	U	12330*	–	L,Y	
10807	O	2.3 II	F	14	U	12340*	–	L,Y	
10808	O	2.3 II	M	16	U	12330*	–	L,Y	
10809	O	2.3 II	F	16	U	12340*	–	L,Y	
10810	O	2.3 II	M	20	U	12330*	–	L,Y	
10811	O	2.3 II	F	20	U	12340*	–	L,Y	

HOUSING PART NUMBER LIST

Part No. of Connector Body	Supply	Terminal	Male Female	Cav. No.	Sealing Ability	Part No. of Repair Wire		Sleeve Color	Memo
						160 mm Type	500 mm Type		
90980–						82998–	82998–		
10812	O	4.8	M	2	U	12370	–	Y	
		2.3 II		12		12330*	–	L,Y	
10813	O	4.8	F	2	U	12380	–	Y	
		2.3 II		12		12340*	–	L,Y	
10814	O	4.8	M	3	U	12370	–	Y	
		2.3 II		12		12330*	–	L,Y	
10815	O	4.8	F	3	U	12380	–	Y	
		2.3 II		12		12340*	–	L,Y	
10816	O	4.8	M	2	U	12370	–	Y	
		2.3 II		18		12330*	–	L,Y	
10817	O	4.8	F	2	U	12380	–	Y	
		2.3 II		18		12340*	–	L,Y	
10818	O	2.3 II	M	18	U	12330*	–	L,Y	
10819	O	2.3 II	F	18	U	12340*	–	L,Y	
10820	O	2.3 II	M	20	U	12330*	–	L,Y	
10821	O	2.3 II	F	20	U	12340*	–	L,Y	
10822	O	2.3 II	F	10	U	12340*	–	L,Y	
10823	O	2.3 II	F	2	U	12340*	–	L,Y	
10824	O	2.3 II	M	2	U	12330*	–	L,Y	
10825	O	2.3 II	F	2	U	12340*	–	L,Y	
10826	X	TLC	M	9	S	12280	–	R	
10827	O	2.3 II	M	15	U	12330*	–	L,Y	
10828	O	2.3 II	F	15	U	12340*	–	L,Y	
10829	O	2.3 II	M	11	U	12330*	–	L,Y	
10830	O	2.3 II	F	11	U	12340*	–	L,Y	
10831	X	2.3	F	4	S	12270*	12600	L	
10833	O	2.3 II	M	2	U	12330*	–	L,Y	w/ Clamp
10834	O	2.3 II	F	3	S	12440*	12590	L,Y	
10835	O	2.3 II	F	2	U	12340*	–	L,Y	
10836	O	8.0	M	1	S	12490	–	Y	
10837	O	8.0	F	1	S	12500	–	Y	
10838	O	8.0	M	2	S	12490	–	Y	
10839	O	8.0	F	2	S	12500	–	Y	
10840	O	4.8	M	3	S	12470	–	Y	
10841	O	4.8	F	3	S	12480	–	Y	
10842	O	2.3 II	M	2	S	12430*	–	L,Y	
10843	O	2.3 II	F	2	S	12440*	12590	L,Y	
10844	O	4.8	F	2	S	12480	–	Y	
		2.3 II		2		12440*	12590	L,Y	

HOUSING PART NUMBER LIST

Part No. of Connector Body	Supply	Terminal	Male Female	Cav. No.	Sealing Ability	Part No. of Repair Wire		Sleeve Color	Memo
						160 mm Type	500 mm Type		
90980–						82998–	82998–		
10845	O	2.3 II	F	3	S	12440*	12590	L,Y	
10846	X	2.3	F	2	S	12270*	12600	L	
10847	X	2.3	F	2	S	12270*	12600	L	
10848	O	2.3 II	F	16	U	12340*	–	L,Y	
10849	X	2.3 II	M	2	U	12330*	–	L,Y	
10850	O	2.3 II	F	2	U	12340*	–	L,Y	
10851	X	2.3 II	M	14	U	–	–	–	PCB
10852	O	2.3 II	F	14	U	12340*	–	L,Y	
10853	X	2.3 II	F	2	S	12440*	12590	L,Y	
10854	O	2.3 II	F	6	S	12440*	12590	L,Y	
10855	O	2.3 II	F	2	U	12340*	–	L,Y	
10856	O	2.3 II 8.0	M	18 1	U	12330* 12390	– –	L,Y Y	
10857	O	2.3 II 8.0	F	18 1	U	12340* 12400	– –	L,Y Y	
10858	O	2.3 II	M	4	U	12330*	–	L,Y	
10859	O	2.3 II	M	2	U	12330*	–	L,Y	
10860	O	2.3 II	F	2	U	12340*	–	L,Y	
10861	O	4.8	M	10	U	12370	–	Y	
10862	O	4.8	F	10	U	12380	–	Y	
10863	X	2.3 II	M	18	U	–	–	–	PCB
10864	O	2.3 II	M	12	U	–	–	–	PCB
10865	X	2.3 II	M	10	U	–	–	–	PCB
10866	O	8.0	M	4	U	12390	–	Y	
10867	O	8.0	F	4	U	12400	–	Y	
10868	O	2.3 II	M	4	S	12430*	–	L,Y	
10869	O	2.3 II	F	4	S	12440*	12590	L,Y	
10870	O	2.3 II	M	1	U	12330*	–	L,Y	w/o Clamp
10871	O	2.3 II	F	1	U	12340*	–	L,Y	
10872	O	4.8 2.3 II	M	7 4	U	12370 12330*	– –	Y L,Y	
10873	O	4.8 2.3 II	F	7 4	U	12380 12340*	– –	Y L,Y	
10874	O	2.3 II	M	16	U	–	–	–	PCB
10875	O	2.3 II	F	22	U	12340*	–	L,Y	
10876	O	4.8 2.3 II	M	3 5	U	12370 12330*	– –	Y L,Y	
10877	O	4.8 2.3 II	F	3 5	U	12380 12340*	– –	Y L,Y	

HOUSING PART NUMBER LIST

Part No. of Connector Body	Supply	Terminal	Male Female	Cav. No.	Sealing Ability	Part No. of Repair Wire		Sleeve Color	Memo
						160 mm Type	500 mm Type		
90980–						82998–	82998–		
10878	O	4.8	M	2	U	12370	–	Y	
		2.3 II		10		12330*	–	L,Y	
10879	O	4.8	F	2	U	12380	–	Y	
		2.3 II		10		12340*	–	L,Y	
10880	O	4.8	M	4	U	12370	–	Y	
		2.3 II		20		12330*	–	L,Y	
10881	O	4.8	F	4	U	12380	–	Y	
		2.3 II		20		12340*	–	L,Y	
10882	O	4.8	M	1	U	12370	–	Y	
		2.3 II		18		12330*	–	L,Y	
10883	O	4.8	F	1	U	12380	–	Y	
		2.3 II		18		12340*	–	L,Y	
10884	O	4.8	M	4	U	12370	–	Y	
		2.3 II		12		12330*	–	L,Y	
10885	O	4.8	F	4	U	12380	–	Y	
		2.3 II		12		12340*	–	L,Y	
10886	O	2.3 II	M	2	S	12430*	–	L,Y	
10887	O	2.3 II	F	2	S	12440*	12590	L,Y	
10888	O	4.8	F	2	U	12380	–	Y	
		8.0		3		12400	–	Y	
10889	O	4.8	F	4	U	12380	–	Y	
		8.0		2		12400	–	Y	
10890	O	2.3 II	M	8	S	12430*	–	L,Y	
10891	O	2.3 II	F	8	S	12440*	12590	L,Y	
10892	O	2.3 II	M	1	S	12430*	–	L,Y	
10893	O	2.3 II	F	1	S	12440*	12590	L,Y	
10894	O	4.8	M	2	S	12470	–	Y	
		2.3 II		6		12430*	–	L,Y	
10895	O	4.8	F	2	S	12480	–	Y	
		2.3 II		6		12440*	12590	L,Y	
10896	O	2.3 II	M	8	S	12430*	–	L,Y	
10897	O	2.3 II	F	8	S	12440*	12590	L,Y	
10898	O	2.3 II	M	2	S	12430*	–	L,Y	
10899	O	2.3 II	F	2	S	12440*	12590	L,Y	
10900	O	2.3 II	M	2	S	12430*	–	L,Y	
10901	O	2.3 II	F	2	S	12440*	12590	L,Y	
10902	O	2.3 II	F	3	S	12440*	12590	L,Y	
10903	O	8.0	F	2	U	12400	–	Y	
10904	O	2.3 II	F	4	U	12340*	–	L,Y	

HOUSING PART NUMBER LIST

Part No. of Connector Body	Supply	Terminal	Male Female	Cav. No.	Sealing Ability	Part No. of Repair Wire		Sleeve Color	Memo
						160 mm Type	500 mm Type		
90980–						82998–	82998–		
10905	O	2.3 II	M	2	U	12330*	–	L,Y	
10906	O	2.3 II	F	2	U	12340*	–	L,Y	
10907	O	2.3 II	M	3	U	12330*	–	L,Y	
10908	O	2.3 II	F	3	U	12340*	–	L,Y	
10909	O	2.3 II 8.0	M	4 2	U	12330* 12390	– –	L,Y Y	
10910	O	2.3 II 8.0	F	4 2	U	12340* 12400	– –	L,Y Y	
10911	O	4.8	F	1	U	12380	–	Y	
10912	O	4.8	F	1	U	12380	–	Y	
10913	X	6.3	F	1	U	12060	12580	Y	
10914	X	6.3	F	1	U	12060	12580	Y	
10915	O	4.8	M	2	U	12370	–	Y	
10916	O	4.8	F	2	U	12380	–	Y	
10917	X	1.8 1.0	M	8 18	U	– –	– –	– –	PCB
10918	X	1.8 1.0	F	8 18	U	12190* 12310*	– –	L L	
10919	O	2.3 II	F	3	S	12440*	12590	L,Y	
10920	O	1.3 2.3 II	M	19 4	U	12410 12330*	– –	L L,Y	
10921	O	1.3 2.3 II	F	19 4	U	12420 12340*	– –	L L,Y	
10923	O	2.3 II	F	2	S	12440*	12590	L,Y	
10924	X	1.8 1.0	M	16 10	U	– –	– –	– –	PCB
10925	O	1.8 1.0	F	10 16	U	12190* 12310*	– –	L L	
10926	O	4.8	F	8	U	12380	–	Y	
10927	O	4.8	M	2	S	12470	–	Y	
10928	O	4.8	F	2	S	12480	–	Y	
10929	X	1.8	F	4	S	12620	–	L	
10930	O	2.3 II	M	7	S	12430*	–	L,Y	
10931	O	2.3 II	F	7	S	12440*	12590	L,Y	
10932	O	4.8 2.3 II	F	2 10	U	12380 12340*	– –	Y L,Y	
10933	O	2.3 II	F	6	U	12340*	–	L,Y	
10934	O	2.3 II	M	2	U	12330*	–	L,Y	
10935	O	2.3 II	F	2	U	12340*	–	L,Y	

HOUSING PART NUMBER LIST

Part No. of Connector Body	Supply	Terminal	Male Female	Cav. No.	Sealing Ability	Part No. of Repair Wire		Sleeve Color	Memo
						160 mm Type	500 mm Type		
90980– 10936	X	2.3 II	M	20	U	82998– –	82998– –	–	PCB
10937	X	2.3 II	M	18	U	–	–	–	PCB
10938	X	2.3 II	M	12	U	–	–	–	PCB
10939	O	4.8 2.3 II	F	2 4	S	12480 12440*	– 12590	Y L,Y	
10940	O	4.8 2.3 II	F	2 2	S	12480 12440*	– 12590	Y L,Y	
10941	O	2.3 II	M	4	S	12430*	–	L,Y	
10942	O	2.3 II	F	4	S	12440*	12590	L,Y	
10943	O	2.3 II	F	4	S	12440*	12590	L,Y	
10944	O	4.8	M	3	S	12470	–	Y	
10945	O	4.8 2.3 II	M	2 3	S	12470 12430*	– –	Y L,Y	
10946	O	4.8 2.3 II	F	2 3	S	12480 12440*	– 12590	Y L,Y	
10947	O	2.3 II	F	2	S	12440*	12590	L,Y	
10948	O	2.3 II	M	2	S	12430*	–	L,Y	
10949	O	2.3 II	F	2	S	12440*	12590	L,Y	
10950	X	2.3 II	F	88	U	12340*	–	L,Y	
10951	X	2.3 II	M	52	U	12330*	–	L,Y	
10952	X	4.8 8.0	F	12 8	U	12380 12400	– –	Y Y	
10953	X	4.8 8.0	F	18 4	U	12380 12400	– –	Y Y	
10954	X	4.8 8.0	M	18 6	U	12370 12390	– –	Y Y	
10955	X	4.8 8.0	F	18 6	U	12380 12400	– –	Y Y	
10956	O	8.0	F	3	U	12400	–	Y	
10957	O	2.3 II	F	6	U	12340*	–	L,Y	
10958	O	8.0	M	2	U	12390	–	Y	
10959	O	2.3 II	M	2	S	12430*	–	L,Y	
10960	X	MIR-ROR	F	2	U	–	–	–	
10961	X	2.3 II	M	10	U	–	–	–	PCB
10962	O	2.3 II	F	2	U	12340*	–	L,Y	
10963	O	4.8	M	8	U	12370	–	Y	
10964	O	2.3 II	F	6	U	12340*	–	L,Y	
10965	O	2.3 II	F	10	U	12340*	–	L,Y	

HOUSING PART NUMBER LIST

Part No. of Connector Body	Supply	Terminal	Male Female	Cav. No.	Sealing Ability	Part No. of Repair Wire		Sleeve Color	Memo
						160 mm Type	500 mm Type		
90980– 10966	O	2.3 II	F	11	U	82998– 12340*	82998– –	L,Y	
10967	O	2.3 II	F	12	U	12340*	–	L,Y	
10968	O	2.3 II	F	12	U	12340*	–	L,Y	
10969	X	1.8 1.0	M	10 32	U	– –	– –	– –	PCB
10970	X	7.7	M	2	S	–	–	–	
10971	X	2.3 II	M	14	U	–	–	–	PCB
10972	X	1.8 1.0	M	22 32	U	– –	– –	– –	PCB
10973	O	1.8	F	12	U	12190*	–	L	
10974	O	2.3 II	F	2	S	12440*	12590	L,Y	
10975	O	4.8	M	6	U	12370	–	Y	
10976	O	4.8	F	6	U	12380	–	Y	
10977	O	2.3 II	M	22	U	12330*	–	L,Y	
10978	O	1.8 1.0	M	16 10	U	– –	– –	– –	PCB
10979	X	4.8	M	3	U	12370	–	Y	
10980	O	4.8	F	3	U	12380	–	Y	
10981	O	2.3 II	F	3	S	12440*	12590	L,Y	
10982	O	4.8	M	1	S	12470	–	Y	
10983	O	4.8	F	1	S	12480	–	Y	
10984	X	2.3	M	6	S	12260*	–	L	w/o Clamp
10985	O	4.8 2.3 II	M	1 4	U	12370 12330*	– –	Y L,Y	
10986	O	4.8 2.3 II	F	1 4	U	12380 12340*	– –	Y L,Y	
10987	O	2.3 II	M	6	S	12430*	–	L,Y	
10988	O	2.3 II	F	6	S	12440*	12590	L,Y	
10989	O	4.8	M	4	S	12470	–	Y	
10990	O	4.8	F	4	S	12480	–	Y	
10991	X	1.8 1.0	M	18 16	U	– –	– –	– –	PCB
10992	X	4.8 2.3 II	M	4 6	U	– –	– –	– –	PCB
10993	O	4.8 2.3 II	F	4 6	U	12380 12340*	– –	Y L,Y	
10994	O	8.0	M	1	U	12390	–	Y	
10995	O	8.0	F	1	U	12400	–	Y	
10996	O	2.3 II	F	6	U	12340*	–	L,Y	

HOUSING PART NUMBER LIST

Part No. of Connector Body	Supply	Terminal	Male Female	Cav. No.	Sealing Ability	Part No. of Repair Wire		Sleeve Color	Memo
						160 mm Type	500 mm Type		
90980– 10997	O	2.3 II	F	10	U	82998– 12340*	82998– –	L,Y	
10998	O	2.3 II	M	6	U	12330*	–	L,Y	
11001	O	2.3 II	F	6	U	12340*	–	L,Y	
11002	O	2.3 II	M	2	S	12430*	–	L,Y	
11003	O	2.3 II	F	2	S	12440*	12590	L,Y	
11004	O	2.3 II	M	2	S	12430*	–	L,Y	
11005	O	2.3 II	F	2	S	12440*	12590	L,Y	
11006	O	2.3 II	M	1	S	12430*	–	L,Y	
11007	O	2.3 II	F	1	S	12440*	12590	L,Y	
11008	O	2.3 II	M	2	S	12430*	–	L,Y	
11009	O	2.3 II	F	2	S	12440*	12590	L,Y	
11010	O	2.3 II	M	6	U	12330*	–	L,Y	
11011	O	2.3 II	F	6	U	12340*	–	L,Y	
11012	O	2.3 II	M	4	U	12330*	–	L,Y	
11013	O	2.3 II	F	4	U	12340*	–	L,Y	
11014	X	6.3	M	2	U	12050	–	Y	
11015	O	2.3 II	M	3	S	12430*	–	L,Y	
11016	O	2.3 II	F	3	S	12440*	12590	L,Y	
11017	X	1.8	M	18	U	–	–	–	PCB
11018	X	1.8	M	42	U	–	–	–	PCB
11019	O	2.3 II	F	2	S	12440*	12590	L,Y	
11020	O	2.3 II	F	3	S	12440*	12590	L,Y	
11021	O	4.8 2.3 II	M	2 3	S	12470 12430*	– –	Y L,Y	
11022	O	4.8 2.3 II	F	2 3	S	12480 12440*	– 12590	Y L,Y	
11023	O	2.3 II	M	4	U	12330*	–	L,Y	
11024	O	2.3 II	F	5	S	12440*	12590	L,Y	
11025	O	2.3 II	F	2	S	12440*	12590	L,Y	
11026	O	2.3 II	M	1	U	12330*	–	L,Y	w/ Clamp
11027	O	2.3 II	M	4	S	12430*	–	L,Y	
11028	O	2.3 II	F	4	S	12440*	12590	L,Y	
11029	O	2.3 II	M	2	S	12430*	–	L,Y	
11030	O	2.3 II	F	2	S	12440*	12590	L,Y	
11031	O	8.0	M	2	S	12490	–	Y	
11032	O	8.0	F	2	S	12500	–	Y	
11033	O	2.3 II	M	6	S	12430*	–	L,Y	
11034	O	2.3 II	F	6	S	12440*	12590	L,Y	
11035	O	4.8	M	4	S	12470	–	Y	

HOUSING PART NUMBER LIST

Part No. of Connector Body	Supply	Terminal	Male Female	Cav. No.	Sealing Ability	Part No. of Repair Wire		Sleeve Color	Memo
						160 mm Type	500 mm Type		
90980– 11036	O	4.8	F	4	S	82998– 12480	82998– –	Y	
11037	O	2.3 II	F	4	S	12440*	12590	L,Y	
11038	O	2.3 II	F	2	S	12440*	12590	L,Y	
11039	X	1.8 1.0	M	16 18	U	– –	– –	– –	PCB
11040	X	1.3 2.3 II	M	47 4	U	– –	– –	– –	PCB
11041	O	1.3	F	11	U	12420	–	L	
11042	O	1.3 2.3 II	F	11 4	U	12420 12340*	– –	L L,Y	
11043	O	1.3	F	25	U	12420	–	L	
11044	O	4.8 8.0	M	2 1	S	12470 12490	– –	Y Y	
11045	O	4.8 8.0	F	2 1	S	12480 12500	– –	Y Y	
11046	X	2.3 II	M	17	U	12330*	–	L,Y	
11049	O	2.3 II	F	5	S	12440*	12590	L,Y	
11050	O	2.3 II	M	2	S	12430*	–	L,Y	
11051	O	2.3 II	F	2	S	12440*	12590	L,Y	
11052	O	1.3	M	3	U	12410	–	L	
11053	O	1.3	F	3	U	12420	–	L	
11054	X	1.3 2.3 II	M	55 8	U	– –	– –	– –	PCB
11055	O	1.3	F	25	U	12420	–	L	
11056	O	1.3 2.3 II	F	11 4	U	12420 12340*	– –	L L,Y	
11057	X	1.3 2.3 II	M	21 4	U	– –	– –	– –	PCB
11058	O	1.3 2.3 II	F	21 4	U	12420 12340*	– –	L L,Y	
11059	X	1.8 1.0	M	18 16	U	– –	– –	– –	PCB
11060	O	2.3 II	M	2	U	12330*	–	L,Y	
11061	X	1.8	F	2	S	12620	–	L	
11062	O	1.8	F	2	S	12620	–	L	
11063	O	1.3	M	4	S	12630	–	L	Outer
11064	O	1.3	M	4	S	12630	–	L	Inner
11065	O	1.3	F	4	S	12650	–	L	Outer
11066	O	1.3	F	4	S	12650	–	L	Inner

HOUSING PART NUMBER LIST

Part No. of Connector Body	Supply	Terminal	Male Female	Cav. No.	Sealing Ability	Part No. of Repair Wire		Sleeve Color	Memo
						160 mm Type	500 mm Type		
90980– 11067	X	2.3 II	M	6	U	82998– –	82998– –	–	PCB
11068	O	2.3 II	F	2	S	12440*	12590	L,Y	
11069	O	2.3 II	M	2	S	12430*	–	L,Y	
11070	O	2.3 II	F	2	S	12440*	12590	L,Y	
11071	O	2.3 II	F	3	U	12340*	–	L,Y	
11072	O	2.3 II	M	2	S	12430*	–	L,Y	
11073	O	2.3 II	M	2	S	12430*	–	L,Y	w/o Clamp
11074	O	2.3 II	M	2	S	12430*	–	L,Y	w/ Clamp
11075	O	2.3 II	F	2	S	12440*	12590	L,Y	
11076	X	TNS	M	4	S	–	–	–	w/ Clamp
11077	O	2.3 II	F	5	S	12440*	12590	L,Y	
11078	O	2.3 II	M	5	S	12430*	–	L,Y	
11079	O	2.3 II	F	3	U	12340*	–	L,Y	
11080	O	2.3 II	F	2	U	12340*	–	L,Y	
11081	X	1.8 1.0	M	10 32	U	– –	– –	– –	PCB
11082	X	1.0	F	16	U	12310*	–	L	
11083	O	1.3	F	11	U	12420	–	L	
11084	X	1.3 2.3 II	M	30 4	U	– –	– –	– –	PCB
11085	O	2.3 II	M	5	U	12330*	–	L,Y	
11086	O	2.3 II	M	12	S	12430*	–	L,Y	
11087	O	2.3 II	F	12	S	12440*	12590	L,Y	
11088	O	1.3	M	15	S	12630	–	L	
11089	O	1.3	F	15	S	12650	–	L	
11090	O	2.3 II	F	4	U	12340*	–	L,Y	
11091	O	4.8	F	6	U	12380	–	Y	
11092	O	4.8	F	8	U	12380	–	Y	
11093	O	4.8	M	2	U	12370	–	Y	
11094	O	4.8	F	2	U	12380	–	Y	
11095	O	HEAD-LAMP	F	2	S	24150	24190	L,Y	
11096	O	HEAD-LAMP	F	2	S	24150	24190	L,Y	
11097	O	2.3 II	M	1	U	12330*	–	L,Y	w/ Clamp
11098	O	2.3 II	F	2	U	12340*	–	L,Y	
11099	O	2.3 II	M	6	U	12330*	–	L,Y	
11100	O	2.3 II	M	4	U	12330*	–	L,Y	
11101	O	2.3 II	M	6	U	12330*	–	L,Y	
11102	O	2.3 II	M	10	U	12330*	–	L,Y	

HOUSING PART NUMBER LIST

Part No. of Connector Body	Supply	Terminal	Male Female	Cav. No.	Sealing Ability	Part No. of Repair Wire		Sleeve Color	Memo
						160 mm Type	500 mm Type		
90980– 11103	X	1.8 1.0	M	8 18	U	82998– – –	82998– – –	– –	PCB
11104	X	2.3 II	M	20	U	–	–	–	PCB
11105	X	2.3 II	M	12	U	–	–	–	PCB
11106	X	1.3	M	4	U	–	–	–	PCB
11107	O	1.3	F	4	U	12420	–	L	
11108	X	HEAD-LAMP	F	3	S	24150	24190	L,Y	
11110	O	2.3 II	M	6	U	12330*	–	L,Y	
11111	O	–	–	–	–	–	–	–	
11113	O	SFPC	F	16	U	24180	–	L	
11114	O	SFPC	F	13	U	24180	–	L	
11115	O	SFPC	F	13	U	24180	–	L	
11116	O	SFPC	F	10	U	24180	–	L	
11117	X	2.3 II	M	20	U	–	–	–	PCB
11118	O	4.8 2.3 II	F	2 2	U	12380 12340*	– –	Y L,Y	
11119	X	1.3	M	21	U	–	–	–	PCB
11120	X	1.3 2.3 II	M	19 4	U	– –	– –	– –	PCB
11121	O	2.3 II	F	12	U	12340*	–	L,Y	
11122	O	2.3 II	M	4	S	12430*	–	L,Y	
11123	X	2.3 II	M	8	U	–	–	–	PCB
11124	X	1.8	M	30	U	–	–	–	PCB
11125	O	1.3	F	21	U	12420	–	L	
11126	O	4.8 2.3 II	M	2 2	U	12370 12330*	– –	Y L,Y	
11127	O	2.3 II	M	18	U	–	–	–	PCB
11128	X	1.8 1.0	M	16 60	U	– –	– –	– –	PCB
11129	O	1.0	F	12	U	12310*	–	L	
11130	O	4.8 2.3 II	F	2 6	U	12380 12340*	– –	Y L,Y	
11131	O	2.3 II	M	3	S	12430*	–	L,Y	
11132	O	2.3 II	F	3	S	12440*	12590	L,Y	
11133	O	1.3	M	25	U	12410	–	L	
11134	O	2.3 II	M	8	U	–	–	–	PCB
11135	O	4.8	M	4	U	12370	–	Y	
11136	O	4.8	F	4	U	12380	–	Y	

HOUSING PART NUMBER LIST

Part No. of Connector Body	Supply	Terminal	Male Female	Cav. No.	Sealing Ability	Part No. of Repair Wire		Sleeve Color	Memo
						160 mm Type	500 mm Type		
90980– 11137	O	2.3 II	M	2	S	82998– 12430*	82998– –	L,Y	
11138	O	4.8 8.0	M	2 2	S	12470 12490	– –	Y Y	
11139	O	4.8 8.0	F	2 2	S	12480 12500	– –	Y Y	
11140	O	2.3 II	F	2	S	12440*	12590	L,Y	
11141	O	2.3 II	M	2	S	12430*	–	L,Y	
11142	O	2.3 II	F	2	S	12440*	12590	L,Y	
11143	O	2.3 II	F	3	S	12440*	12590	L,Y	
11144	O	2.3 II	F	6	S	12440*	12590	L,Y	
11145	O	2.3 II	F	3	S	12440*	12590	L,Y	
11146	O	2.3 II	M	1	U	12330*	–	L,Y	
11147	O	2.3 II	F	1	U	12340*	–	L,Y	
11148	O	2.3 II	F	2	U	12340*	–	L,Y	
11149	O	2.3 II	F	2	S	12440*	12590	L,Y	
11150	O	2.3 II	F	4	S	12440*	12590	L,Y	
11151	O	2.3 II	F	12	S	12440*	12590	L,Y	
11152	O	2.3 II	F	4	S	12440*	12590	L,Y	
11153	O	2.3 II	F	2	S	–	12790*	L,Y	
11154	O	2.3 II	F	2	S	–	12790*	L,Y	
11155	O	2.3 II	M	2	S	12430*	–	L,Y	
11156	O	2.3 II	F	2	S	12440*	12590	L,Y	
11157	X	2.3 II	F	3	S	12440*	12590	L,Y	
11158	O	1.3 2.3 II	M	21 4	U	12410 12330*	– –	L L,Y	
11159	O	2.3 II	M	2	U	12330*	–	L,Y	
11160	O	4.8 2.3 II	M	1 2	S	12470 12430*	– –	Y L,Y	
11161	O	4.8 2.3 II	F	1 2	S	12480 12440*	– 12590	Y L,Y	
11162	O	2.3 II	F	2	S	12440*	12590	L,Y	
11163	O	2.3 II	F	2	S	12440*	12590	L,Y	
11164	X	1.3	M	7	U	–	–	–	PCB
11165	O	1.3	F	7	U	12420	–	L	
11166	O	2.3 II	F	1	S	12440*	12590	L,Y	
11167	O	2.3 II	M	16	U	12330*	–	L,Y	
11168	O	2.3 II	M	2	S	12430*	–	L,Y	
11169	O	1.3	M	3	S	12630	–	L	
11170	O	1.3	F	3	S	12650	–	L	

HOUSING PART NUMBER LIST

Part No. of Connector Body	Supply	Terminal	Male Female	Cav. No.	Sealing Ability	Part No. of Repair Wire		Sleeve Color	Memo
						160 mm Type	500 mm Type		
90980– 11171	O	1.3	M	7	S	82998– 12630	82998– –	L	
11172	O	1.3	F	7	S	12650	–	L	
11173	O	1.3	M	11	S	12630	–	L	
11174	O	1.3	F	11	S	12650	–	L	
11175	O	2.3 II	M	2	S	12430*	–	L,Y	
11176	O	2.3 II	F	2	S	12440*	12590	L,Y	
11177	O	2.3 II	M	4	S	12430*	–	L,Y	
11178	O	2.3 II	F	4	S	12440*	12590	L,Y	
11179	O	1.3	F	15	U	12420	–	L	
11180	X	1.3	M	15	U	–	–	–	PCB
11181	O	1.3	M	5	S	12630	–	L	
11182	O	1.3	F	5	S	12650	–	L	
11183	O	8.0	M	1	S	12490	–	Y	
11184	O	8.0	F	1	S	12500	–	Y	
11186	O	1.3	M	4	U	12410	–	L	
11187	O	1.3	F	4	U	12420	–	L	
11188	O	1.3	M	2	S	12630	–	L	
11189	O	1.3	F	2	S	12650	–	L	
11190	O	2.3 II	F	8	S	12440*	12590	L,Y	
11191	O	1.3	M	9	S	12630	–	L	
11192	O	1.3	F	9	S	12650	–	L	
11193	O	2.3 II	M	6	S	12430*	–	L,Y	
11194	O	2.3 II	F	6	S	12440*	12590	L,Y	
11195	O	2.3 II 2.3 II 6.3 II	F	22 22 1	S U S	12440* 12340* 24160	12590 – –	L,Y L,Y L	
11196	O	2.3 II	M	6	S	12430*	–	L,Y	
11197	O	2.3 II	F	6	S	12440*	12590	L,Y	
11198	X	1.3	M	13	U	–	–	–	PCB
11199	X	1.3	F	13	U	12420	–	L	
11200	X	1.3	M	11	U	12410	–	L	
11201	X	1.3	M	15	U	12410	–	L	
11202	X	1.3	M	17	U	12410	–	L	
11203	X	1.3	F	17	U	12420	–	L	
11204	X	1.3 2.3 II	M	15 4	U	12410 12330*	– –	L L,Y	
11205	X	1.3 2.3 II	F	15 4	U	12420 12340*	– –	L L,Y	
11206	X	1.3	M	21	U	12410	–	L	

HOUSING PART NUMBER LIST

Part No. of Connector Body	Supply	Terminal	Male Female	Cav. No.	Sealing Ability	Part No. of Repair Wire		Sleeve Color	Memo
						160 mm Type	500 mm Type		
90980– 11207	O	2.3 II	F	2	S	82998– 12440*	82998– 12590	L,Y	
11208	O	1.3 2.3 II	M	19 4	U	12410 12330*	– –	L L,Y	
11211	O	1.3	M	2	U	12410	–	L	
11212	O	1.3	F	2	U	12420	–	L	
11213	X	1.0	M	120	S	–	–	–	PCB
11214	O	1.0	F	80	S	–	–	–	
11215	O	1.0	F	40	S	–	–	–	
11216	O	–	–	–	–	–	–	–	
11217	X	1.0 II	M	100	U	–	–	–	PCB
11218	O	1.0 II	F	28	U	24020*	–	L	
11219	O	1.0 II	F	16	U	24020*	–	L	
11220	O	1.0 II	F	22	U	24020*	–	L	
11221	O	1.0 II	F	34	U	24020*	–	L	
11222	O	1.0 II 1.8 II 1.8 II	M	18 14 14	U	24010 24030 24090	– – –	L L,Y L,Y	
11223	O	1.0 II 1.8 II 1.8 II	M	12 6 6	U	24010 24030 24090	– – –	L L,Y L,Y	
11224	O	1.0 II 1.8 II 1.8 II	F	12 6 6	U	24020* 24040 24100*	– – –	L L,Y L,Y	
11225	O	1.0 II 1.8 II 1.8 II	F	6 8 8	U	24020* 24040 24100*	– – –	L L,Y L,Y	
11226	O	1.0 II 1.8 II 1.8 II	F	12 6 6	U	24020* 24040 24100*	– – –	L L,Y L,Y	
11227	O	2.3 II	F	2	U	12340*	–	L,Y	
11228	O	1.8 1.0	M	18 16	U	– –	– –	– –	PCB
11229	X	2.3 II	M	3	U	–	–	–	PCB
11230	X	2.3 II	M	5	U	–	–	–	PCB
11231	O	2.3 II	F	10	S	12440*	12590	L,Y	
11232	O	2.3 II	F	5	S	12440*	12590	L,Y	
11233	X	1.8 1.0	M	4 22	U	– –	– –	– –	PCB

HOUSING PART NUMBER LIST

Part No. of Connector Body	Supply	Terminal	Male Female	Cav. No.	Sealing Ability	Part No. of Repair Wire		Sleeve Color	Memo
						160 mm Type	500 mm Type		
90980–						82998–	82998–		
11234	X	1.8	F	4	U	12190*	–	L	
		1.0		22		12310*	–	L	
11235	O	2.3 II	F	2	S	12440*	12590	L,Y	
11236	X	4.8	M	2	S	12470	–	Y	
11237	O	4.8	F	2	S	12480	–	Y	
11238	X	2.3 II	F	22	U	12340*	–	L,Y	
11239	O	4.8	M	3	S	12470	–	Y	
		2.3 II		8		12430*	–	L,Y	
11240	O	4.8	F	3	S	12480	–	Y	
		2.3 II		8		12440*	12590	L,Y	
11241	O	2.3 II	M	6	S	12430*	–	L,Y	
		8.0		2		12490	–	Y	
11242	O	2.3 II	F	6	S	12440*	12590	L,Y	
		8.0		2		12500	–	Y	
11243	O	2.3 II	F	1	S	12440*	12590	L,Y	
11244	O	2.3 II	M	3	S	12430*	–	L,Y	w/ Clamp
11245	O	2.3 II	F	3	S	12440*	12590	L,Y	
11246	O	2.3 II	F	2	S	12440*	12590	L,Y	
11247	O	2.3 II	M	2	S	12430*	–	L,Y	
11248	O	2.3 II	F	2	S	12440*	12590	L,Y	
11249	X	2.3 II	M	2	S	12430*	–	L,Y	
11250	O	2.3 II	F	2	S	12440*	12590	L,Y	
11251	X	2.3 II	F	3	U	12340*	–	L,Y	
11252	O	2.3 II	F	1	S	12440*	12590	L,Y	
11253	X	1.0 III	M	5	U	–	–	–	PCB
		1.0 III		52		–	–	–	
11254	X	2.3 II	M	2	S	12430*	–	L,Y	
11255	O	2.3 II	F	2	S	12440*	12590	L,Y	
11256	X	1.3	M	11	S	12630	–	L	
11257	X	1.3	F	11	S	12650	–	L	
11258	O	4.8	M	1	U	12370	–	Y	
11259	O	4.8	F	1	U	12380	–	Y	
11260	X	2.3 II	F	20	U	12340*	–	L,Y	
11261	O	2.3 II	F	3	S	12440*	12590	L,Y	
11262	X	1.3	M	4	S	12630	–	L	Outer
11263	X	1.3	M	15	U	–	–	–	PCB
11264	O	1.3	F	15	U	12420	–	L	
11265	X	2.3 II	M	14	U	–	–	–	PCB

HOUSING PART NUMBER LIST

Part No. of Connector Body	Supply	Terminal	Male Female	Cav. No.	Sealing Ability	Part No. of Repair Wire		Sleeve Color	Memo
						160 mm Type	500 mm Type		
90980–						82998–	82998–		
11266	X	1.8 1.0	M	10 32	U	– –	– –	– –	PCB
11267	X	4.8 2.3 II	M	2 4	S	12470 12430*	– –	Y L,Y	
11268	X	2.3 II	M	4	S	12430*	–	L,Y	
11269	X	2.3 II	F	4	S	12440*	12590	L,Y	
11270	O	2.3 II	M	1	S	12430*	–	L,Y	
11271	O	2.3 II	F	1	S	12440*	12590	L,Y	
11272	O	2.3 II	M	2	S	12430*	–	L,Y	
11273	O	2.3 II	F	2	S	12440*	12590	L,Y	
11274	O	–	–	–	–	–	–	–	
11276	X	4.8	F	10	U	12380	–	Y	
11277	X	4.8 2.3 II	F	1 8	U	12380 12340*	– –	Y L,Y	
11278	O	2.3 II	F	2	U	12340*	–	L,Y	
11279	O	4.8 2.3 II	F	2 6	U	12380 12340*	– –	Y L,Y	
11280	O	2.3 II	F	6	U	12340*	–	L,Y	
11281	X	1.0 III 1.0 IV	M	98 24	U	– –	– –	– –	PCB
11282	X	2.3 II	F	1	S	12440*	12590	L,Y	
11283	X	4.8 2.3 II	F	2 2	S	12480 12440*	– 12590	Y L,Y	
11284	O	2.3 II	F	2	S	–	12790*	L,Y	
11285	O	2.3 II	F	2	S	–	12790*	L,Y	
11286	X	2.3 II	F	2	S	12440*	12590	L,Y	
11287	X	2.3 II 8.0	M	2 2	S	12430* 12490	– –	L,Y Y	
11288	X	2.3 II 8.0	F	2 2	S	12440* 12500	12590 –	L,Y Y	
11289	O	2.3 II	M	6	S	12430*	–	L,Y	
11290	O	2.3 II	F	6	S	12440*	12590	L,Y	
11291	O	2.3 II	M	4	S	12430*	–	L,Y	
11292	O	2.3 II	F	4	S	12440*	12590	L,Y	
11293	X	2.3 II	M	3	S	12430*	–	L,Y	
11294	O	2.3 II	F	3	S	12440*	12590	L,Y	
11295	O	2.3 II	M	3	S	12430*	–	L,Y	w/ Clamp
11296	X	2.3 II	F	3	U	12340*	–	L,Y	
11297	X	4.8	F	6	U	12380	–	Y	

HOUSING PART NUMBER LIST

Part No. of Connector Body	Supply	Terminal	Male Female	Cav. No.	Sealing Ability	Part No. of Repair Wire		Sleeve Color	Memo
						160 mm Type	500 mm Type		
90980– 11298	X	2.3 II	M	3	U	82998– 12330*	82998– –	L,Y	
11299	O	2.3 II	M	2	U	12330*	–	L,Y	w/ Clamp
11300	O	2.3 II	M	2	U	12330*	–	L,Y	
11301	X	2.3 II	M	4	U	12330*	–	L,Y	
11302	X	4.8	F	9	U	12380	–	Y	
11303	X	2.3 II	M	2	S	12430*	–	L,Y	
11304	O	4.8 2.3 II	F	2 2	S	12480 12440*	– 12590	Y L,Y	
11305	X	1.3	M	2	U	12410	–	L	
11306	X	1.3	F	2	U	12420	–	L	
11307	X	1.3 2.3 II	M	15 4	U	12410 12330*	– –	L L,Y	
11308	X	1.3 2.3 II	F	15 4	U	12420 12340*	– –	L L,Y	
11309	X	1.3 2.3 II	M	13 4	U	12410 12330*	– –	L L,Y	
11310	X	1.3 2.3 II	F	13 4	U	12420 12340*	– –	L L,Y	
11311	O	2.3 II	F	12	U	12340*	–	L,Y	
11312	X	2.3 II	M	14	U	–	–	–	PCB
11313	X	2.3 II	F	4	U	12340*	–	L,Y	
11314	O	HEAD-LAMP	F	3	U	24140	24200	L,Y	
11315	X	2.3 II	F	1	U	12340*	–	L,Y	
11316	X	2.3 II 6.3 II	M	20 1	U	12330* –	– –	L,Y –	
11317	O	2.3 II	F	5	S	12440*	12590	L,Y	
11318	X	1.3	M	5	U	–	–	–	PCB
11319	O	1.3	F	5	U	12420	–	L	
11320	X	1.3	M	8	U	–	–	–	PCB
11321	X	1.3	F	8	U	12420	–	L	
11322	X	2.3 II	M	2	S	12430*	–	L,Y	
11323	O	2.3 II 2.3 II 6.3 II	F	22 22 1	S U S	12440* 12340* 24160	12590 – –	L,Y L,Y L	
11324	X	2.3 II	M	16	U	–	–	–	PCB
11325	X	2.3 II	M	10	U	–	–	–	PCB
11326	X	2.3 II	F	6	U	12340*	–	L,Y	
11327	X	2.3 II	M	5	U	12330*	–	L,Y	

HOUSING PART NUMBER LIST

Part No. of Connector Body	Supply	Terminal	Male Female	Cav. No.	Sealing Ability	Part No. of Repair Wire		Sleeve Color	Memo
						160 mm Type	500 mm Type		
90980– 11328	X	1.3	M	4	S	82998– 12630	82998– –	L	Inner
11329	X	1.3	F	4	S	12650	–	L	Outer
11330	X	1.3	F	4	S	12650	–	L	Inner
11331	X	2.3 II	M	10	U	–	–	–	PCB
11332	O	4.8 2.3 II	F	2 8	S	12480 12440*	– 12590	Y L,Y	
11333	X	1.8 1.0	M	4 22	U	12180 –	– –	L –	
11334	X	1.3	M	17	U	12410	–	L	
11335	X	1.3	F	17	U	12420	–	L	
11336	X	1.3	F	3	U	12420	–	L	
11337	X	2.3 II	M	14	U	–	–	–	PCB
11338	X	1.0	M	80	S	–	–	–	
11339	X	1.3	M	7	U	–	–	–	PCB
11340	X	1.3	F	7	U	12420	–	L	
11341	X	2.3 II	M	3	S	12430*	–	L,Y	
11342	X	1.0	M	40	U	–	–	–	
11343	X	1.0	M	28	U	–	–	–	PCB
11344	X	1.0	M	16	U	–	–	–	
11345	X	1.0	M	22	U	–	–	–	
11346	X	1.0	M	34	U	–	–	–	
11347	X	LA	F	40	U	–	–	–	
11348	O	2.3 II	M	3	S	12430*	–	L,Y	
11349	O	2.3 II	F	3	S	12440*	12590	L,Y	
11350	X	1.3	F	13	U	12420	–	L	
11351	X	2.3 II	M	16	U	–	–	–	PCB
11352	X	1.0 II 1.8 II	M	60 16	U	– –	– –	– –	PCB
11353	X	2.3 II	M	8	U	12330*	–	L,Y	
11354	X	2.3 II	F	8	U	12340*	–	L,Y	
11355	X	4.8 2.3 II 8.0	M	4 38 1	U	12370 12330* 12390	– – –	Y L,Y Y	
11356	X	4.8 2.3 II	M	4 24	U	12370 12330*	– –	Y L,Y	
11357	X	2.3 II	M	27	U	12330*	–	L,Y	
11359	X	4.8 2.3 II	F	4 51	U	12380 12340*	– –	Y L,Y	

HOUSING PART NUMBER LIST

Part No. of Connector Body	Supply	Terminal	Male Female	Cav. No.	Sealing Ability	Part No. of Repair Wire		Sleeve Color	Memo
						160 mm Type	500 mm Type		
90980– 11360	X	4.8 2.3 II 8.0	F	4 38 1	U	82998– 12380 12340* 12400	82998– – – –	 Y L,Y Y	
11361	X	4.8 2.3 II	M	4 4	U	– –	– –	– –	PCB
11362	X	4.8 2.3 II	F	4 4	U	12380 12340*	– –	Y L,Y	
11363	O	2.3 II	F	1	S	12440*	12590	L,Y	
11364	O	1.0 III 1.0 IV	M	81 24	U	– –	– –	– –	PCB
11365	X	4.8 2.3 II	M	2 8	U	– –	– –	– –	PCB
11366	X	4.8 2.3 II	F	2 8	U	12380 12340*	– –	Y L,Y	
11367	X	1.3	M	2	U	12410	–	L	
11368	O	1.3	M	2	U	12410	–	L	
11369	O	1.3	F	2	U	12420	–	L	
11370	X	2.3 II	M	15	U	12330*	–	L,Y	
11371	X	2.3 II	M	15	U	12330*	–	L,Y	
11372	X	2.3 II	F	15	U	12340*	–	L,Y	
11373	X	2.3 II	M	25	U	12330*	–	L,Y	
11374	X	2.3 II	M	25	U	12330*	–	L,Y	
11375	X	2.3 II	F	25	U	12340*	–	L,Y	
11376	X	1.3	M	19	U	12410	–	L	
11377	X	1.3	F	19	U	12420	–	L	
11378	X	1.3	M	21	U	12410	–	L	
11379	X	1.3	F	21	U	12420	–	L	
11380	X	1.3	M	23	U	12410	–	L	
11381	X	1.3	F	23	U	12420	–	L	
11382	X	2.3 II	M	14	U	–	–	–	PCB
11383	X	2.3 II	F	14	U	12340*	–	L,Y	
11384	X	1.3	M	13	U	–	–	–	PCB
11385	X	8.0	M	3	U	12390	–	Y	
11386	X	8.0	F	2	U	12400	–	Y	
11387	X	4.8 8.0	F	1 2	U	12380 12400	– –	Y Y	
11388	X	2.3 II	F	2	U	12340*	–	L,Y	
11389	X	1.3	M	8	U	–	–	–	PCB

HOUSING PART NUMBER LIST

Part No. of Connector Body	Supply	Terminal	Male Female	Cav. No.	Sealing Ability	Part No. of Repair Wire		Sleeve Color	Memo
						160 mm Type	500 mm Type		
90980–						82998–	82998–		
11390	O	1.0 II	F	16	U	24020*	–	L	
		1.8 II		10		24100*	–	L,Y	
11391	O	1.0 II	F	16	U	24020*	–	L	
11392	O	1.0 II	F	16	U	24020*	–	L	
		1.8 II		6		24100*	–	L,Y	
11393	X	1.3	M	13	U	12410	–	L	
11394	X	1.3	F	13	U	12420	–	L	
11395	X	2.3 II	M	2	U	12330*	–	L,Y	
11396	X	2.3 II	F	2	U	12340*	–	L,Y	
11397	X	2.3 II	F	8	U	12340*	–	L,Y	
11398	X	2.3 II	F	4	U	12340*	–	L,Y	
11399	O	2.3 II	M	4	U	12330*	–	L,Y	
11400	O	4.8	F	1	S	12480	–	Y	
11401	X	2.3 II	F	2	S	12440*	12590	L,Y	
11402	X	1.3	M	7	U	–	–	–	PCB
11403	X	1.3	M	25	U	12410	–	L	
11404	X	1.3	F	25	U	12420	–	L	
11405	X	1.8	M	12	U	–	–	–	PCB
		1.0 II		32		–	–	–	
		1.8 II		10		–	–	–	
11406	X	1.0 II	F	22	U	24020*	–	L	
		1.8 II		4		24100*	–	L,Y	
11407	X	2.3 II	M	3	S	12430*	–	L,Y	w/o Clamp
11408	O	1.0 II	F	12	U	24020*	–	L	
11409	X	4.8	M	2	S	12470	–	Y	
11410	O	4.8	F	2	S	12480	–	Y	
11411	X	1.3	M	21	U	–	–	–	PCB
		2.3 II		4		–	–	–	
11412	O	4.8	M	3	S	12470	–	Y	
		2.3 II		2		12430*	–	L,Y	
11413	O	4.8	F	3	S	12480	–	Y	
		2.3 II		2		12440*	12590	L,Y	
11414	X	SL	F	3	S	–	–	–	
11415	X	2.3 II	M	16	U	12330*	–	L,Y	
11416	X	2.3 II	F	16	U	12340*	–	L,Y	
11417	O	2.3 II	F	17	U	12340*	–	L,Y	
11418	X	1.8	M	12	U	–	–	–	PCB
		1.0 II		16		–	–	–	
		1.8 II		10		–	–	–	

HOUSING PART NUMBER LIST

Part No. of Connector Body	Supply	Terminal	Male Female	Cav. No.	Sealing Ability	Part No. of Repair Wire		Sleeve Color	Memo
						160 mm Type	500 mm Type		
90980– 11419	X	2.3 II	M	10	U	82998– –	82998– –	–	PCB
11420	X	2.3	F	17	U	12170	–	L	
11421	O	1.0 III 1.0 IV	F	20 11	U	12690* 12740	– –	L L	
11422	X	1.0 II 1.8 II	F	18 8	U	24020* 24100*	– –	L L,Y	
11423	O	1.0 II 1.8 II	F	16 10	U	24020* 24100*	– –	L L,Y	
11424	O	1.8 II	F	12	U	24100*	–	L,Y	
11425	X	1.0 II	F	16	U	24020*	–	L	
11426	X	2.3 II	M	4	U	–	–	–	PCB
11427	X	2.3 II	F	4	U	12340*	–	L,Y	
11428	O	2.3 II	F	1	S	12440*	12590	L,Y	
11429	X	2.3 II	F	2	U	12340*	–	L,Y	
11430	X	4.8 2.3 II 8.0	M	4 40 5	U	12370 12330* 12390	– – –	Y L,Y Y	
11431	X	4.8 2.3 II 8.0	F	4 40 5	U	12380 12340* 12400	– – –	Y L,Y Y	
11432	X	1.8 II	F	20	U	24100*	–	L,Y	
11433	O	1.8 II 1.8 II	F	14 14	U	24040 24100*	– –	L,Y L,Y	
11434	X	C–TYPE	M	16	U	12560	–	L	
11435	X	C–TYPE	F	16	U	12570	–	L	
11436	O	1.3	F	2	U	12420	–	L	
11437	X	2.3 II	F	14	U	12340*	–	L,Y	
11438	X	4.8 2.3 II	M	3 5	U	12370 12330*	– –	Y L,Y	
11439	X	4.8 2.3 II	F	3 5	U	12380 12340*	– –	Y L,Y	
11440	X	2.3 II	M	20	U	12330*	–	L,Y	
11441	X	2.3 II	F	20	U	12340*	–	L,Y	
11442	X	2.3 II	M	20	U	12330*	–	L,Y	
11443	X	2.3 II	F	20	U	12340*	–	L,Y	
11444	O	2.3 II	M	16	U	12330*	–	L,Y	
11445	X	2.3 II	F	16	U	12340*	–	L,Y	
11447	X	2.3 II	M	2	S	12430*	–	L,Y	
11448	X	2.3 II	F	2	S	12440*	12590	L,Y	

HOUSING PART NUMBER LIST

Part No. of Connector Body	Supply	Terminal	Male Female	Cav. No.	Sealing Ability	Part No. of Repair Wire		Sleeve Color	Memo
						160 mm Type	500 mm Type		
90980– 11449	X	1.3	M	10	U	82998– –	82998– –	–	PCB
11450	O	1.3	F	10	U	12420	–	L	
11451	O	2.3 II	F	3	S	–	12790*	L,Y	
11452	X	2.3 II	M	6	U	12330*	–	L,Y	
11453	X	2.3 II	F	12	U	12340*	–	L,Y	
11459	X	2.3 II	F	8	U	12340*	–	L,Y	
11460	X	4.8 2.3 II	M	2 6	S	12470 12430*	– –	Y L,Y	
11461	X	4.8 2.3 II	F	2 6	S	12480 12440*	– 12590	Y L,Y	
11462	X	1.3	M	16	S	12630	–	L	
11463	X	1.3	F	16	S	12650	–	L	
11464	X	2.3 II	M	14	U	–	–	–	PCB
11465	X	2.3 II	F	14	U	12340*	–	L,Y	
11466	X	2.3 II	M	2	S	12430*	–	L,Y	
11467	O	2.3 II	F	2	S	12440*	12590	L,Y	
11468	X	1.3	M	22	U	–	–	–	PCB
11469	O	1.3 2.3 II	F	16 4	U	12420 12340*	– –	L L,Y	
11470	X	1.3	M	3	U	12410	–	L	
11471	O	1.3	F	3	U	12420	–	L	
11472	X	1.3 2.3 II	M	30 4	U	– –	– –	– –	PCB
11473	X	1.3 2.3 II	M	21 4	U	– –	– –	– –	PCB
11474	X	1.3	M	12	U	–	–	–	PCB
11475	O	1.3	F	12	U	12420	–	L	
11476	O	1.0 III 1.0 IV	F	17 7	U	12690* 12740	– –	L L	
11477	X	LAC	M	22	U	12100	–	L,Y	
11478	X	LAC	F	13	U	12110	–	L,Y	
11479	X	LAC	F	9	U	12110	–	L,Y	
11483	X	1.3 2.3 II	M	21 4	U	– –	– –	– –	PCB
11484	X	2.3 II 8.0	M	1 2	U	12330* 12390	– –	L,Y Y	
11485	X	2.3 II 8.0	F	1 2	U	12340* 12400	– –	L,Y Y	
11486	O	2.3 II	M	2	S	12430*	–	L,Y	

HOUSING PART NUMBER LIST

Part No. of Connector Body	Supply	Terminal	Male Female	Cav. No.	Sealing Ability	Part No. of Repair Wire		Sleeve Color	Memo
						160 mm Type	500 mm Type		
90980– 11487	X	1.3	M	6	U	82998– 12410	82998– –	L	
11488	X	1.3	F	6	U	12420	–	L	
11489	X	1.3	M	3	U	12410	–	L	
11490	O	1.3	F	3	U	12420	–	L	
11491	X	6.3	F	3	S	12540	–	Y	
11492	X	1.3 2.3 II	M	4 2	U	12410 12330*	– –	L L,Y	
11493	X	1.3 2.3 II	F	4 2	U	12420 12340*	– –	L L,Y	
11494	O	1.3	F	4	U	12420	–	L	
11495	X	1.3	F	4	U	12420	–	L	
11496	X	1.3	M	18	U	–	–	–	PCB
11497	X	1.3	F	18	U	12420	–	L	
11498	X	1.3	M	20	U	12410	–	L	
11499	X	1.3	F	20	U	12420	–	L	
11500	X	1.3	M	12	U	12410	–	L	
11501	O	1.3 2.3 II	M	16 4	U	– –	– –	– –	PCB
11502	O	1.3	F	22	U	12420	–	L	
11503	O	1.3	M	22	U	12410	–	L	
11504	O	1.3 2.3 II	M	16 4	U	12410 12330*	– –	L L,Y	
11505	X	1.3	M	17	U	12410	–	L	
11506	X	1.3	F	17	U	12420	–	L	
11507	X	1.3	M	64	U	–	–	–	PCB
11508	X	1.3	F	40	U	12420	–	L	
11509	X	1.3	F	24	U	12420	–	L	
11510	X	1.3	M	14	U	–	–	–	PCB
11511	X	1.3	F	14	U	12420	–	L	
11512	X	ABS	F	2	U	–	–	–	
11514	X	ABS	F	32	U	–	–	–	
11517	X	ABS	F	6	S	–	–	–	
11519	X	ABS	F	2	S	–	–	–	
11520	X	ABS	F	2	S	–	–	–	
11522	X	ABS	F	4	S	–	–	–	
11524	X	ABS	F	12	U	–	–	–	
11526	X	4.8 2.3 II	M	2 8	U	– –	– –	– –	PCB

HOUSING PART NUMBER LIST

Part No. of Connector Body	Supply	Terminal	Male Female	Cav. No.	Sealing Ability	Part No. of Repair Wire		Sleeve Color	Memo
						160 mm Type	500 mm Type		
90980–						82998–	82998–		
11527	O	4.8	F	2	U	12380	–	Y	
		2.3 II		8		12340*	–	L,Y	
11528	O	2.3 II	M	7	U	12330*	–	L,Y	
11529	O	2.3 II	F	7	U	12340*	–	L,Y	
11530	O	2.3 II	M	12	U	12330*	–	L,Y	
11531	O	2.3 II	F	12	U	12340*	–	L,Y	
11532	O	1.3	M	8	U	12410	–	L	
11533	O	1.3	F	8	U	12420	–	L	
11534	O	2.3 II	M	9	U	12330*	–	L,Y	
11535	O	2.3 II	F	9	U	12340*	–	L,Y	
11536	O	2.3 II	M	10	U	12330*	–	L,Y	
11537	O	2.3 II	F	10	U	12340*	–	L,Y	
11538	O	2.3 II	M	11	U	12330*	–	L,Y	
11539	O	2.3 II	F	11	U	12340*	–	L,Y	
11540	X	2.3 II	F	2	S	12440*	12590	L,Y	
11541	O	2.3 II	M	13	U	12330*	–	L,Y	
11542	O	2.3 II	F	13	U	12340*	–	L,Y	
11543	X	2.3 II	M	9	U	–	–	–	PCB
11544	O	1.3	M	10	U	–	–	–	PCB
11545	X	2.3 II	M	2	U	12330*	–	L,Y	
11546	X	4.8	M	4	U	12370	–	Y	
		2.3 II		12		12330*	–	L,Y	
11547	X	4.8	F	4	U	12380	–	Y	
		2.3 II		12		12340*	–	L,Y	
11548	X	1.8	M	8	U	–	–	–	PCB
		1.0		18		–	–	–	
11549	X	1.8 II	M	34	U	24030	–	L,Y	
		1.8 II		34		24090	–	L,Y	
11550	X	1.8	M	12	U	–	–	–	PCB
11551	X	4.8	M	8	U	12370	–	Y	
11552	O	1.3	F	16	U	12420	–	L	
		2.3 II		22		12340*	–	L,Y	
11553	X	1.3	M	5	U	–	–	–	PCB
11554	X	1.3	M	16	U	12410	–	L	
		2.3 II		22		12330*	–	L,Y	
11555	X	1.3	F	16	U	12420	–	L	
		2.3 II		22		12340*	–	L,Y	
11556	O	1.3	F	14	U	12420	–	L	
11557	X	1.3	M	60	U	–	–	–	PCB

HOUSING PART NUMBER LIST

Part No. of Connector Body	Supply	Terminal	Male Female	Cav. No.	Sealing Ability	Part No. of Repair Wire		Sleeve Color	Memo
						160 mm Type	500 mm Type		
90980– 11558	X	1.3	F	20	U	82998– 12420	82998– –	L	
11559	X	1.3 2.3 II	M	8 9	U	12410 12330*	– –	L L,Y	
11560	X	1.3 2.3 II	F	8 9	U	12420 12340*	– –	L L,Y	
11561	X	1.3 2.3 II	M	6 10	U	12410 12330*	– –	L L,Y	
11562	X	1.3 2.3 II	F	6 10	U	12420 12340*	– –	L L,Y	
11563	O	1.8 1.0	M	10 32	U	– –	– –	– –	PCB
11564	O	1.0 II 1.8 II	M	26 16	U	– –	– –	– –	PCB
11565	O	1.0 II 1.8 II	F	10 6	U	24020* 24100*	– –	L L,Y	
11566	X	1.0 II	F	40	S	24060	–	L	
11567	X	1.0 II	M	40	S	–	–	–	PCB
11568	X	2.3 II	M	13	U	12330*	–	L,Y	
11569	X	2.3 II 8.0	F	2 2	S	12440* 12500	12590 –	L,Y Y	
11570	O	1.3	M	19	U	12410	–	L	
11571	O	1.3	F	19	U	12420	–	L	
11572	O	1.3	M	52	U	–	–	–	PCB
11573	O	1.3	M	16	U	12410	–	L	
11574	O	1.3	F	16	U	12420	–	L	
11575	O	1.8 1.0	M	22 32	U	– –	– –	– –	PCB
11576	O	1.8 1.0	M	16 48	U	– –	– –	– –	PCB
11577	O	1.8 1.0	M	16 60	U	– –	– –	– –	PCB
11578	O	1.0	M	100	U	–	–	–	PCB
11579	O	8.0	F	2	U	12400	–	Y	
11580	X	1.3	M	10	U	12410	–	L	
11581	X	1.3	F	10	U	12420	–	L	
11582	X	1.3	M	8	U	12410	–	L	
11583	O	4.8	F	6	U	12380	–	Y	
11585	X	2.3 II	M	16	U	–	–	–	PCB
11586	X	1.0 III	F	17	U	12640	–	L	IDC

HOUSING PART NUMBER LIST

Part No. of Connector Body	Supply	Terminal	Male Female	Cav. No.	Sealing Ability	Part No. of Repair Wire		Sleeve Color	Memo
						160 mm Type	500 mm Type		
90980– 11587	O	2.3 II	M	6	U	82998– 12330*	82998– –	L,Y	
11588	X	1.3	M	8	U	12410	–	L	
11589	X	1.3	M	2	U	–	–	–	PCB
11590	X	1.3 2.3 II	M	8 6	U	12410 12330*	– –	L L,Y	
11591	X	1.3 2.3 II	F	8 6	U	12420 12340*	– –	L L,Y	
11592	O	2.3 II	F	8	S	12440*	12590	L,Y	
11593	X	2.3 II	F	8	S	12440*	12590	L,Y	
11594	O	1.3 2.3 II	F	10 8	U	12420 12340*	– –	L L,Y	
11595	O	1.3 2.3 II	F	10 8	U	12420 12340*	– –	L L,Y	
11596	O	4.8 2.3 II	M	2 8	U	12370 12330*	– –	Y L,Y	
11597	X	1.8 1.0	M	10 32	U	– –	– –	– –	PCB
11598	O	2.3 II	M	5	S	12430*	–	L,Y	
11599	O	2.3 II	F	5	S	12440*	12590	L,Y	
11600	O	4.8 2.3 II 8.0	M	3 12 2	S	12470 12430* 12490	– – –	Y L,Y Y	
11601	X	4.8 2.3 II 8.0	F	3 12 2	S	12480 12440* 12500	– 12590 –	Y L,Y Y	
11602	X	4.8 2.3 II	M	2 3	U	12370 12330*	– –	Y L,Y	
11603	X	4.8 2.3 II	F	2 3	U	12380 12340*	– –	Y L,Y	
11604	O	2.3 II	F	13	U	12340*	–	L,Y	
11605	X	1.3 2.3 II	M	2 2	U	12410 12330*	– –	L L,Y	
11606	X	1.3 2.3 II	F	2 2	U	12420 12340*	– –	L L,Y	
11607	X	2.3 II	M	3	S	12430*	–	L,Y	
11608	O	2.3 II	F	2	U	12340*	–	L,Y	
11609	X	4.8 2.3 II	M	3 8	S	12470 12430*	– –	Y L,Y	

HOUSING PART NUMBER LIST

Part No. of Connector Body	Supply	Terminal	Male Female	Cav. No.	Sealing Ability	Part No. of Repair Wire		Sleeve Color	Memo
						160 mm Type	500 mm Type		
90980–						82998–	82998–		
11610	X	4.8	M	4	U	12370	–	Y	
		2.3 II		22		12330*	–	L,Y	
11611	X	4.8	F	4	U	12380	–	Y	
		2.3 II		22		12340*	–	L,Y	
11612	X	4.8	F	3	S	12480	–	Y	
		2.3 II		8		12440*	12590	L,Y	
11613	O	1.3	M	8	U	12410	–	L	
		2.3 II		2		12330*	–	L,Y	
11614	X	1.3	F	8	U	12420	–	L	
		2.3 II		2		12340*	–	L,Y	
11615	O	4.8	F	8	U	12380	–	Y	
11616	O	1.3	F	6	U	12420	–	L	
11617	X	2.3 II	F	6	U	12340*	–	L,Y	
11618	X	1.3	F	40	U	12420	–	L	
11619	X	1.0 II	M	16	U	–	–	–	PCB
		1.8 II		18		–	–	–	
11620	X	1.3	M	3	U	–	–	–	PCB
11621	X	1.3	M	22	U	–	–	–	PCB
11622	O	2.3 II	M	3	S	12430*	–	L,Y	
11623	O	1.3	M	8	U	12410	–	L	
11624	X	1.3	M	6	U	–	–	–	PCB
		2.3 II		10		–	–	–	
11625	X	1.3	M	5	U	–	–	–	PCB
		4.8		2		–	–	–	
		2.3 II		17		–	–	–	
11626	X	2.3 II	F	12	U	12340*	–	L,Y	
11627	X	1.3	M	20	U	12410	–	L	
11628	O	1.3	F	22	U	12420	–	L	
11629	O	1.3	M	8	U	–	–	–	PCB
11630	O	1.3	F	8	U	12420	–	L	
11631	O	4.8	M	6	U	12370	–	Y	
		2.3 II		20		12330*	–	L,Y	
11632	X	4.8	F	6	U	12380	–	Y	
		2.3 II		20		12340*	–	L,Y	
11633	X	1.3	F	8	U	12420	–	L	
11634	X	1.3	M	12	U	–	–	–	PCB
11635	X	1.3	M	13	U	–	–	–	PCB
11636	X	1.3	M	8	U	–	–	–	PCB
11637	O	1.0 III	F	28	U	12690*	–	L	

HOUSING PART NUMBER LIST

Part No. of Connector Body	Supply	Terminal	Male Female	Cav. No.	Sealing Ability	Part No. of Repair Wire		Sleeve Color	Memo
						160 mm Type	500 mm Type		
90980– 11638	O	1.0 III 1.0 IV	F	16 6	U	82998– 12690* 12740	82998– – –	 L L	
11639	X	–	–	–	–	–	–	–	
11640	X	6.3 II	F	4	S	24160	–	L	
11641	O	1.3	M	10	U	–	–	–	PCB
11642	O	1.3	F	10	U	12420	–	L	
11643	O	4.8 2.3 II	F	2 7	S	12480 12440*	– 12590	Y L,Y	
11644	X	1.3	M	14	U	–	–	–	PCB
11645	X	1.3 2.3 II	M	60 10	U	– –	– –	– –	PCB
11646	X	1.3 2.3 II	M	36 16	U	– –	– –	– –	PCB
11647	X	1.3 2.3 II	M	20 16	U	– –	– –	– –	PCB
11648	X	1.3	F	16	U	12420	–	L	
11649	O	2.3 II	F	12	U	12340*	–	L,Y	
11650	X	1.8 1.0	M	22 32	U	– –	– –	– –	PCB
11651	X	1.3 2.3 II	M	8 6	U	– –	– –	– –	PCB
11652	X	1.3 2.3 II	F	10 6	U	12420 12340*	– –	L L,Y	
11653	O	2.3 II	F	10	S	12440*	12590	L,Y	
11654	O	1.3	M	14	U	12410	–	L	
11655	O	8.0	M	2	U	12390	–	Y	
11656	O	2.3 II	F	12	U	12340*	–	L,Y	
11657	O	1.3	F	10	U	12420	–	L	
11658	O	2.3 II	F	10	S	12440*	12590	L,Y	
11659	O	HEAD-LAMP	F	2	S	24150	24190	L,Y	
11660	O	HEAD-LAMP	F	2	S	24150	24190	L,Y	
11661	O	2.3 II	F	12	U	12340*	–	L,Y	
11662	X	8.0	F	4	U	12400	–	Y	
11663	X	2.3 II	F	6	S	12440*	12590	L,Y	
11664	X	2.3 II	F	12	S	12440*	12590	L,Y	
11665	O	OBD II	F	16	U	–	–	–	
11666	X	–	–	–	–	–	–	–	

HOUSING PART NUMBER LIST

Part No. of Connector Body	Supply	Terminal	Male Female	Cav. No.	Sealing Ability	Part No. of Repair Wire		Sleeve Color	Memo
						160 mm Type	500 mm Type		
90980–						82998–	82998–		
11667	X	4.8	F	1	U	12380	–	Y	
		8.0		2		12400	–	Y	
11669	X	2.3 II	M	27	U	12330*	–	L,Y	
11670	X	2.3 II	F	27	U	12340*	–	L,Y	
11671	O	1.3	F	8	U	12420	–	L	
		2.3 II		9		12340*	–	L,Y	
11672	X	1.3	F	8	U	12420	–	L	
		2.3 II		9		12340*	–	L,Y	
11676	X	8.0	F	4	U	12400	–	Y	
11677	X	2.3 II	F	15	S	12440*	12590	L,Y	
11680	X	1.3	M	16	U	12410	–	L	
11681	X	1.3	F	16	U	12420	–	L	
11682	X	1.3	M	16	U	12410	–	L	
11683	X	1.3	F	16	U	12420	–	L	
11684	O	8.0	F	2	U	12400	–	Y	
11685	O	8.0	F	3	U	12400	–	Y	
11686	O	4.8	F	8	U	12380	–	Y	
11687	X	6.3	F	2	U	12060	12580	Y	
11688	X	1.3	M	5	S	12630	–	L	
11689	X	1.3	M	5	S	12630	–	L	
11690	X	1.3	F	5	S	12650	–	L	Outer
11691	X	1.3	F	5	S	12650	–	L	Inner
11693	X	2.3 II	F	12	U	12340*	–	L,Y	
11694	X	2.3 II	M	13	U	12330*	–	L,Y	
11695	X	2.3 II	F	13	U	12340*	–	L,Y	
11696	X	1.5	M	6	U	–	–	–	PCB
11697	X	1.5	F	6	U	–	–	–	
11698	O	1.3	F	12	S	12650	–	L	
11700	X	1.0 II	M	32	U	–	–	–	PCB
		1.8 II		10		–	–	–	
11701	O	4.8	F	4	U	12380	–	Y	
		2.3 II		4		12340*	–	L,Y	
11703	X	2.3 II	F	1	U	12340*	–	L,Y	
11709	X	2.3 II	M	9	U	12330*	–	L,Y	
11710	X	2.3 II	F	9	U	12340*	–	L,Y	
11714	X	2.3 II	F	13	U	12340*	–	L,Y	
11716	X	1.3	F	10	U	12420	–	L	
		2.3 II		8		12340*	–	L,Y	
11720	X	2.3 II	F	12	U	12340*	–	L,Y	

HOUSING PART NUMBER LIST

Part No. of Connector Body	Supply	Terminal	Male Female	Cav. No.	Sealing Ability	Part No. of Repair Wire		Sleeve Color	Memo
						160 mm Type	500 mm Type		
90980– 11724	X	2.3 II	M	2	U	82998– 12350*	82998– –	L,Y	
11731	X	HEAD-LAMP	F	3	U	24140	24200	L,Y	
11733	O	1.8 1.0 1.0 II 1.8 II	M	22 16 16 22	U	– – – –	– – – –	– – – –	PCB
11735	X	2.3 II	M	2	U	12330*	–	L,Y	
11736	O	2.3 II	F	2	U	12340*	–	L,Y	
11737	X	2.3 II	M	1	U	12330*	–	L,Y	
11738	X	2.3 II	F	1	U	12340*	–	L,Y	
11739	X	2.3 II	M	7	U	12330*	–	L,Y	
11740	X	2.3 II	F	7	U	12340*	–	L,Y	
11742	O	4.8	F	4	U	12380	–	Y	
11743	X	1.3	M	14	U	–	–	–	PCB
11744	X	1.3	M	14	U	–	–	–	PCB
11745	X	1.3	M	18	U	–	–	–	PCB
11746	X	1.3	M	22	U	–	–	–	PCB
11747	X	2.3 II	M	12	U	–	–	–	PCB
11748	X	2.3 II	M	18	U	–	–	–	PCB
11749	X	2.3 II	M	20	U	–	–	–	PCB
11750	X	2.3 II	M	20	U	–	–	–	PCB
11751	X	2.3 II	M	18	U	–	–	–	PCB
11752	X	2.3 II	M	10	U	–	–	–	PCB
11753	X	2.3 II	M	14	U	–	–	–	PCB
11757	X	2.3 II	M	10	U	12330*	–	L,Y	
11763	X	2.3 II	M	3	U	12330*	–	L,Y	
11764	O	2.3 II	F	3	U	12340*	–	L,Y	
11765	X	2.3 II	M	4	U	12330*	–	L,Y	
11766	X	2.3 II	F	4	U	12340*	–	L,Y	
11767	X	2.3 II	M	1	U	12330*	–	L,Y	
11769	X	2.3 II	F	2	U	12340*	–	L,Y	
11771	X	4.8 2.3 II	F	2 2	U	12380 12340*	– –	Y L,Y	
11772	X	2.3 II	F	5	U	12340*	–	L,Y	
11773	X	2.3 II	F	2	S	12440*	12590	L,Y	
11774	X	9.5	M	1	U	–	–	–	
11775	X	9.5	F	1	U	–	–	–	
11777	X	1.3	F	3	U	12420	–	L	

HOUSING PART NUMBER LIST

Part No. of Connector Body	Supply	Terminal	Male Female	Cav. No.	Sealing Ability	Part No. of Repair Wire		Sleeve Color	Memo
						160 mm Type	500 mm Type		
90980– 11778	O	4.8	F	6	U	82998– 12380	82998– –	Y	
11779	O	2.3 II	M	4	U	12330*	–	L,Y	
11780	O	2.3 II	F	6	U	12340*	–	L,Y	
11781	X	2.3 II	F	10	U	12340*	–	L,Y	
11782	X	2.3 II	F	12	U	12340*	–	L,Y	
11784	O	4.8 2.3 II	F	2 7	S	12480 12440*	– 12590	Y L,Y	
11785	X	1.0 J 1.8 J	M	48 16	U	– –	– –	– –	PCB
11786	X	1.0 J 1.8 J	F	16 10	U	– –	– –	– –	
11787	X	1.0 J	F	16	U	–	–	–	
11788	X	1.0 J 1.8 J	F	16 6	U	– –	– –	– –	
11789	X	1.0 III	M	2	S	12710	–	L	
11790	X	1.0 III	F	2	S	12720*	–	L	
11791	X	2.3 II	F	14	U	12340*	–	L,Y	
11792	X	2.3 II	F	4	U	12340*	–	L,Y	
11794	X	VH	F	7	U	–	–	–	
11797	X	2.3 II	F	5	U	12340*	–	L,Y	
11799	X	4.8	F	4	U	12380	–	Y	
11800	X	2.3 II	F	10	U	12340*	–	L,Y	
11805	X	2.3 II	F	14	U	12340*	–	L,Y	
11809	X	4.8	M	4	U	12370	–	Y	
11812	X	2.3 II	M	4	U	12330*	–	L,Y	
11814	X	2.3 II	M	6	U	12330*	–	L,Y	
11817	X	2.3 II	F	10	U	12340*	–	L,Y	
11820	X	2.3 II	F	6	U	12340*	–	L,Y	
11823	X	2.3 II	M	10	U	12330*	–	L,Y	
11824	X	8.0	F	2	U	12400	–	Y	
11827	X	2.3 II	F	13	U	12340*	–	L,Y	
11839	X	2.3 II	F	2	U	12340*	–	L,Y	
11840	X	2.3 II	F	2	U	12340*	–	L,Y	
11841	X	2.3 II	F	4	U	12340*	–	L,Y	
11842	X	2.3 II	F	4	U	12340*	–	L,Y	
11843	X	2.3 II	M	5	U	12330*	–	L,Y	
11847	X	2.3 II	F	12	U	12340*	–	L,Y	
11848	X	2.3 II	F	13	U	12340*	–	L,Y	

HOUSING PART NUMBER LIST

Part No. of Connector Body	Supply	Terminal	Male Female	Cav. No.	Sealing Ability	Part No. of Repair Wire		Sleeve Color	Memo
						160 mm Type	500 mm Type		
90980– 11851	X	4.8 2.3 II	F	4 20	S	82998– 12480 –	82998– – 12790*	Y L,Y	
11853	X	6.3	F	1	U	12060	12580	Y	
11854	X	1.0 III	M	2	S	12710	–	L	
11856	O	1.0 III	F	2	S	12720*	–	L	
11857	X	1.0 III	F	4	S	12720*	–	L	
11858	O	2.3 II	F	6	S	12440*	12590	L,Y	
11859	X	2.3 II	F	2	S	12440*	12590	L,Y	
11860	X	2.3 II	F	3	S	12440*	12590	L,Y	
11861	X	4.8 1.5	F	25 25	S	12480 –	– –	Y –	
11862	O	PAI 1	F	2	U	–	–	–	
11863	X	1.0 III	M	2	S	12710	–	L	
11864	X	1.0 III	F	2	S	12720*	–	L	
11865	X	1.0 III	M	2	S	12710	–	L	
11866	X	1.0 III	M	44	U	–	–	–	PCB
11867	X	1.0 III	F	12	U	12690*	–	L	
11868	X	1.0 III	F	20	U	12690*	–	L	
11869	X	1.0 III	F	12	U	12690*	–	L	
11870	X	1.0 III	M	52	U	–	–	–	PCB
11871	X	1.0 III	F	12	U	12690*	–	L	
11872	X	1.0 III	F	28	U	12690*	–	L	
11873	X	1.0 III	F	12	U	12690*	–	L	
11874	X	2.3 II	M	3	U	–	–	–	PCB
11875	O	2.3 II	F	2	S	–	12790*	L,Y	
11876	X	1.0 III 2.3 II	M	19 6	U	– –	– –	– –	PCB
11877	O	1.0 III 2.3 II	F	19 6	U	12690* 12340*	– –	L L,Y	
11878	O	4.8	M	4	U	12370	–	Y	
11879	X	4.8	F	6	U	12380	–	Y	
11880	X	8.0	F	3	U	12400	–	Y	
11881	X	9.5	F	1	U	–	–	–	
11882	X	4.8 2.3 II	F	4 20	S	12480 –	– 12790*	Y L,Y	
11883	X	1.0 III	M	2	U	12670*	–	L	
11884	X	1.0 III	F	2	U	12690*	–	L	
11885	O	2.3 II	F	4	S	–	12790*	L,Y	
11886	O	1.0 III	F	2	U	12690*	–	L	

HOUSING PART NUMBER LIST

Part No. of Connector Body	Supply	Terminal	Male Female	Cav. No.	Sealing Ability	Part No. of Repair Wire		Sleeve Color	Memo
						160 mm Type	500 mm Type		
90980– 11889	X	1.0 III	M	2	U	82998– 12670*	82998– –	L	
11890	X	1.0 III	F	2	U	12690*	–	L	
11891	X	1.0 III	M	4	U	12670*	–	L	
11892	X	1.0 III	F	4	U	12690*	–	L	
11893	X	4.8 2.3 II	F	4 20	S	12480 –	– 12790*	Y L,Y	
11898	X	1.0 III	F	2	S	12720*	–	L	
11899	X	1.8 1.0	M	8 18	U	– –	– –	– –	PCB
11900	X	2.3 II	F	2	S	–	12790*	L,Y	
11901	X	2.3 II	M	2	S	12430*	–	L,Y	
11902	O	1.8 1.0	M	6 32	U	– –	– –	– –	PCB
11903	X	1.0 III 1.0 III	M	5 44	U	– –	– –	– –	PCB
11904	X	1.0 III	M	5	S	12710	–	L	
11905	X	1.3 2.3 II	M	16 4	U	– –	– –	– –	PCB
11906	X	SL	F	83	U	12130	–	L,Y	
11907	X	SL	F	3	S	–	–	–	
11908	X	SL	F	5	U	12130	–	L,Y	
11909	O	1.0 III	F	5	U	12690*	–	L	
11910	X	1.0 III	M	14	U	12670*	–	L	
11911	O	1.0 III	F	14	U	12690*	–	L	
11912	X	1.0 III	M	18	U	12670*	–	L	
11913	O	1.0 III	F	18	U	12690*	–	L	
11914	O	1.0 III	F	18	U	12640	–	L	IDC
11915	O	1.0 III	F	22	U	12690*	–	L	
11916	X	1.0 III	M	40	U	–	–	–	PCB
11917	X	1.0 III	M	2	U	12670*	–	L	
11918	O	1.0 III	F	2	U	12690*	–	L	
11919	O	1.0 III	F	2	U	12640	–	L	IDC
11920	O	1.0 III	M	5	U	12670*	–	L	
11921	O	1.0 III	F	5	U	12640	–	L	IDC
11922	X	1.0 III	M	10	U	12670*	–	L	
11923	O	1.0 III	F	10	U	12690*	–	L	
11924	O	1.0 III	F	10	U	12640	–	L	IDC
11925	O	1.0 III	F	14	U	12640	–	L	IDC
11926	O	1.0 III	M	22	U	12670*	–	L	

HOUSING PART NUMBER LIST

Part No. of Connector Body	Supply	Terminal	Male Female	Cav. No.	Sealing Ability	Part No. of Repair Wire		Sleeve Color	Memo
						160 mm Type	500 mm Type		
90980– 11927	O	1.0 III	F	22	U	82998– 12640	82998– –	L	IDC
11928	X	1.0 III	M	54	U	–	–	–	PCB
11929	X	2.3 II	M	4	S	12430*	–	L,Y	
11930	X	2.3 II	F	4	S	12440*	12590	L,Y	
11933	X	1.0 III	M	2	U	12670*	–	L	
11934	X	1.0 III 1.0 IV	M	81 24	U	– –	– –	– –	PCB
11935	X	1.0 III 1.0 IV	F	20 11	U	12690* 12740	– –	L L	
11936	X	8.0	M	3	U	12390	–	Y	
11937	X	INVERT-ER	M	3	U	–	–	–	
11938	X	INVERT-ER	F	3	U	–	–	–	
11939	O	–	–	–	–	–	–	–	
11940	X	PIN	M	2	S	–	–	–	
11941	X	LA	F	1	S	–	–	–	
11942	O	LA	F	1	S	–	–	–	
11943	X	SOCK-ET	F	1	S	–	–	–	
11944	O	SOCK-ET	F	1	S	–	–	–	
11945	O	PIN	M	2	S	–	–	–	
11946	X	1.0 III	M	5	U	–	–	–	PCB
11947	X	1.0 III 2.3 II	F	8 4	U	12690* 12340*	– –	L L,Y	
11948	O	1.0 III	F	10	U	12640	–	L	IDC
11949	X	1.0 III	M	18	U	–	–	–	PCB
11950	X	1.0 III	F	4	U	12690*	–	L	
11951	X	1.0 III	M	13	U	–	–	–	PCB
11952	X	1.0 III	F	13	U	12690*	–	L	
11953	X	1.0 III 2.3 II	M	64 14	U	– –	– –	– –	PCB
11954	X	1.0 III 2.3 II	F	8 9	U	12690* 12340*	– –	L L,Y	
11955	X	1.0 III	F	19	U	12690*	–	L	
11956	X	1.0 III	F	21	U	12690*	–	L	
11957	X	1.0 III 2.3 II	F	16 5	U	12690* 12340*	– –	L L,Y	
11960	X	2.3 II	F	5	S	12440*	12590	L,Y	

HOUSING PART NUMBER LIST

Part No. of Connector Body	Supply	Terminal	Male Female	Cav. No.	Sealing Ability	Part No. of Repair Wire		Sleeve Color	Memo
						160 mm Type	500 mm Type		
90980– 11961	X	1.0 III 1.0 III	M	5 28	U	82998– – –	82998– – –	– –	PCB
11962	X	9.5	M	1	S	–	–	–	
11963	X	9.5	F	1	S	–	–	–	
11964	O	2.3 II	F	4	S	12440*	12590	L,Y	
11965	X	8.0	M	4	U	–	–	–	PCB
11966	X	1.0 II	M	22	U	–	–	–	PCB
11967	O	1.0 III	M	2	U	12670*	–	L	
11968	X	1.0 III	M	5	U	–	–	–	PCB
11969	X	1.0 III	M	14	U	–	–	–	PCB
11970	X	1.0 III 2.3 II	M	16 4	U	– –	– –	– –	PCB
11971	X	1.0 III 2.3 II	F	16 4	U	12690* 12340*	– –	L L,Y	
11972	X	1.0 III 2.3 II	M	49 14	U	– –	– –	– –	PCB
11973	O	1.0 III 2.3 II	F	10 8	U	12690* 12340*	– –	L L,Y	
11974	X	1.0 III	F	20	U	12690*	–	L	
11976	O	–	–	–	–	–	–	–	
11978	X	OBD II	F	16	U	–	–	–	
11985	X	1.0 III	M	4	U	–	–	–	PCB
11986	O	1.0 III	F	6	U	12690*	–	L	
11987	X	1.0 III	F	3	U	12690*	–	L	
11988	O	1.0 III	F	4	U	12640	–	L	IDC
11989	X	1.0 III	F	8	U	12690*	–	L	
11990	X	1.0 III 2.3 II	M	37 18	U	– –	– –	– –	PCB
11992	X	1.0 III	M	2	U	12670*	–	L	
11993	X	1.0 III	M	10	U	–	–	–	PCB
11994	X	2.3 II	M	3	U	–	–	–	PCB
11995	O	–	–	–	–	–	–	–	
11996	X	9.5	F	2	U	–	–	–	
12002	X	1.0 III 2.3 II	M	6 5	U	12670* 12330*	– –	L L,Y	
12003	X	1.0 III 2.3 II	F	6 5	U	12690* 12340*	– –	L L,Y	
12004	X	1.0	M	6	U	–	–	–	IDC
12005	X	2.3 II	F	4	S	–	12790*	L,Y	

HOUSING PART NUMBER LIST

Part No. of Connector Body	Supply	Terminal	Male Female	Cav. No.	Sealing Ability	Part No. of Repair Wire		Sleeve Color	Memo
						160 mm Type	500 mm Type		
90980– 12006	O	–	–	–	–	82998– –	82998– –	–	
12007	X	1.0 III 2.3 II	F	4 9	U	12690* 12340*	– –	L L,Y	
12008	O	1.0 III 2.3 II	F	2 8	U	12690* 12340*	– –	L L,Y	
12009	X	1.0 III	M	10	U	–	–	–	PCB
12010	X	1.0 III 2.3 II	M	10 8	U	– –	– –	– –	PCB
12011	X	1.0 III	M	18	U	–	–	–	PCB
12012	X	1.0 III	F	6	U	12690*	–	L	
12013	X	1.0 III	M	6	U	–	–	–	PCB
12014	X	2.3 II	F	2	U	12340*	–	L,Y	
12015	X	1.0 III	M	14	U	–	–	–	PCB
12016	X	1.0 III	M	4	U	12670*	–	L	
12017	X	1.0 III	F	4	U	12690*	–	L	
12018	X	2.3 II	F	4	U	12340*	–	L,Y	
12019	X	1.0 III	F	4	U	12640	–	L	IDC
12020	O	4.8 1.0 III	F	4 30	S	12480 12720*	– –	Y L	
12021	O	4.8 1.0 III	F	4 23	S	12480 12720*	– –	Y L	
12022	X	4.8 1.0 III	F	4 16	S	12480 12720*	– –	Y L	
12023	X	1.0 III	M	10	U	12660	–	L	IDC
12024	X	1.0 III	M	22	U	12670*	–	L	
12025	X	1.0 III 2.3 II	M	16 4	U	12670* 12330*	– –	L L,Y	
12026	X	2.3 II	F	9	U	24220	–	L	IDC
12027	X	2.3 II	F	13	U	24220	–	L	IDC
12028	O	2.3 II	F	2	S	12440*	12590	L,Y	
12029	X	1.0	M	2	U	–	–	–	
12030	X	1.0 III	M	22	U	–	–	–	PCB
12031	X	1.0 J 1.8 J	M	60 16	U	– –	– –	– –	PCB
12032	X	1.0 J	F	12	U	–	–	–	
12033	X	4.8 1.0 III	M	2 18	U	– –	– –	– –	PCB
12034	X	4.8 1.0 III	F	2 18	U	12380 12690*	– –	Y L	

HOUSING PART NUMBER LIST

Part No. of Connector Body	Supply	Terminal	Male Female	Cav. No.	Sealing Ability	Part No. of Repair Wire		Sleeve Color	Memo
						160 mm Type	500 mm Type		
90980–						82998–	82998–		
12035	X	1.0 III 2.3 II	M	41 6	U	– –	– –	– –	PCB
12036	X	1.0 III	M	5	U	–	–	–	PCB
12037	X	1.0 III 2.3 II	M	16 4	U	– –	– –	– –	PCB
12038	O	1.0 III 2.3 II	F	16 4	U	12690* 12340*	– –	L L,Y	
12039	X	VH	F	2	U	–	–	–	
12041	X	HFC	M	1	U	–	–	–	
12050	X	1.0 III	M	5	U	–	–	–	PCB
12055	X	1.0 III 1.0 IV	M	100 22	U	– –	– –	– –	PCB
12056	X	0.64	F	6	U	–	–	–	
12057	X	2.3 II	F	4	S	12440*	12590	L,Y	
12058	X	4.8 8.0	F	1 2	S	12480 12500	– –	Y Y	
12059	X	1.0 III	M	7	U	12670*	–	L	
12060	X	1.0 III	F	7	U	12690*	–	L	
12061	X	1.0 III	M	8	U	–	–	–	PCB
12062	X	1.0 III	M	2	U	12670*	–	L	
12063	X	1.0 III	F	2	U	12690*	–	L	
12064	X	1.0 III	M	6	U	–	–	–	PCB
12067	X	1.0 III	F	6	U	12690*	–	L	
12068	X	8.0	F	2	S	12500	–	Y	
12070	X	2.3 II	F	24	U	12340*	–	L,Y	
12071	X	2.3 II	F	32	U	12340*	–	L,Y	
12079	X	B TO J	F	24	U	–	–	–	
12080	X	1.0 III	F	8	S	12720*	–	L	
12081	X	1.0 III	M	29	U	12670*	–	L	
12082	X	1.0 III	F	14	U	12690*	–	L	
12087	X	1.0 III	M	20	U	–	–	–	PCB
12088	O	2.3 II	F	2	U	12340*	–	L,Y	
12089	X	2.3 II	F	2	U	12340*	–	L,Y	
12090	X	2.3 II	F	12	U	12340*	–	L,Y	
12091	X	1.0 III	F	8	U	12690*	–	L	
12092	O	0.64 1.0 IV	F	5 2	U	– 12740	– –	– L	
12093	X	1.0 III	M	16	U	–	–	–	PCB
12094	X	1.0 III	F	16	U	12690*	–	L	

HOUSING PART NUMBER LIST

Part No. of Connector Body	Supply	Terminal	Male Female	Cav. No.	Sealing Ability	Part No. of Repair Wire		Sleeve Color	Memo
						160 mm Type	500 mm Type		
90980– 12095	X	M6 NUT	F	3	S	82998– –	82998– –	–	
12096	X	1.0 III 2.3 II	F	12 20	U	12690* 12340*	– –	L L,Y	
12101	X	2.3 II	F	16	U	12340*	–	L,Y	
12102	X	2.3 II	F	28	U	12340*	–	L,Y	
12104	X	2.3 II	F	16	U	12340*	–	L,Y	
12105	X	2.3 II	M	16	U	12330*	–	L,Y	
12106	X	2.3 II	F	20	U	12340*	–	L,Y	
12108	X	2.3 II	M	18	U	–	–	–	PCB
12109	X	PAI 1	F	2	U	–	–	–	
12110	X	VALVE	F	2	U	–	–	–	
12111	X	VALVE	F	2	U	–	–	–	
12112	X	1.0 III	M	8	U	–	–	–	PCB
12113	X	1.0 III	F	8	U	12690*	–	L	
12114	X	1.0 III 2.3 II	F	6 28	U	12690* 12340*	– –	L L,Y	
12116	O	4.8 1.0 III	F	4 20	S	12480 12720*	– –	Y L	
12117	X	2.3 II	F	2	S	–	12790*	L,Y	
12118	X	8.0	M	2	U	–	–	–	PCB
12119	X	8.0	M	2	U	–	–	–	PCB
12120	X	8.0	F	2	U	12400	–	Y	
12122	X	1.0 III 2.3 II	F	6 12	U	12690* 12340*	– –	L L,Y	
12123	X	1.0 III	M	4	U	12670*	–	L	
12125	X	LA	F	1	S	–	–	–	
12129	X	LA	F	1	S	–	–	–	
12131	X	BUS–BAR	M	3	S	–	–	–	
12134	X	1.0 III	M	10	U	–	–	–	PCB
12135	X	1.0 III	F	10	U	12690*	–	L	
12136	X	LA	F	1	S	–	–	–	
12137	X	1.0 III 2.3 II	M	14 6	U	– –	– –	– –	PCB
12138	O	PAI 1	F	2	U	–	–	–	
12140	X	1.0 II 1.8 II	M	48 16	U	– –	– –	– –	PCB
12141	X	0.64 1.0 IV	M	133 34	U	– –	– –	– –	PCB

HOUSING PART NUMBER LIST

Part No. of Connector Body	Supply	Terminal	Male Female	Cav. No.	Sealing Ability	Part No. of Repair Wire		Sleeve Color	Memo
						160 mm Type	500 mm Type		
90980–						82998–	82998–		
12142	X	0.64 1.0 IV	F	24 7	U	12750* 12740	– –	L L	
12143	X	0.64 1.0 IV	F	25 7	U	12750* 12740	– –	L L	
12144	X	0.64 1.0 IV	F	27 7	U	12750* 12740	– –	L L	
12145	X	0.64 1.0 IV	F	28 7	U	12750* 12740	– –	L L	
12146	X	0.64 1.0 IV	F	29 6	U	12750* 12740	– –	L L	
12147	X	0.64 2.3 II	M	68 12	U	– –	– –	– –	PCB
12148	X	0.64 2.3 II	M	40 10	U	– –	– –	– –	PCB
12149	X	0.64 2.3 II	F	20 4	U	12750* 12340*	– –	L L,Y	
12150	X	0.64 2.3 II	F	20 6	U	12750* 12340*	– –	L L,Y	
12151	X	0.64 2.3 II	F	28 2	U	12750* 12340*	– –	L L,Y	
12152	X	0.64	M	32	U	–	–	–	PCB
12153	X	0.64	F	32	U	12750*	–	L	
12155	X	0.64	F	16	U	12750*	–	L	
12156	X	0.64	F	16	U	12770	–	L	IDC
12157	X	0.64	M	16	U	–	–	–	PCB
12159	X	1.0 III	M	4	U	12670*	–	L	
12160	X	1.0 III	F	4	U	12690*	–	L	
12161	X	1.0 III 2.3 II	M	8 9	U	12670* 12330*	– –	L L,Y	
12162	X	1.0 III	F	10	U	12690*	–	L	
12163	X	2.3 II	M	8	S	12430*	–	L,Y	
12164	X	2.3 II	F	8	S	12440*	12590	L,Y	
12165	O	–	–	–	–	–	–	–	
12166	X	1.0 III 2.3 II	F	14 6	U	12690* 12340*	– –	L L,Y	
12167	X	1.0 III	M	8	U	–	–	–	PCB
12168	X	1.0 III	F	3	S	12720*	–	L	
12169	X	0.64	F	40	U	12750*	–	L	
12170	X	0.64	F	40	U	12770	–	L	IDC

HOUSING PART NUMBER LIST

Part No. of Connector Body	Supply	Terminal	Male Female	Cav. No.	Sealing Ability	Part No. of Repair Wire		Sleeve Color	Memo
						160 mm Type	500 mm Type		
90980– 12171	X	0.64	M	40	U	82998– –	82998– –	–	PCB
12174	X	1.0 II	F	18	U	24020*	–	L	IDC
12176	O	2.3 II	F	4	S	–	12790*	L,Y	
12177	X	2.3 II	M	4	S	–	–	L,Y	
12179	X	1.0 III 2.3 II	F	42 4	U	12690* 12340*	– –	L L,Y	
12182	X	0.64	M	12	U	–	–	–	PCB
12183	X	0.64	F	12	U	12750*	–	L	
12184	X	1.0 III 2.3 II	F	30 12	U	12690* 12340*	– –	L L,Y	
12188	X	2.3 II	F	2	S	12440*	12590	L,Y	
12189	X	1.0 III	M	5	U	12670*	–	L	
12190	X	1.0 III	F	5	U	12690*	–	L	
12191	X	PAI 1	F	2	U	–	–	–	
12192	X	0.64	M	16	U	–	–	–	
12193	X	0.64	M	24	U	–	–	–	
12194	X	1.0 III	M	2	S	12710	–	L	
12195	X	1.0 III	F	2	S	12720*	–	L	
12196	X	D–3	M	3	U	–	–	–	
12197	X	D–3	F	3	U	–	–	–	
12198	X	D–3	M	6	U	–	–	–	
12199	X	D–3	F	6	U	–	–	–	
12200	X	0.64	F	24	U	12750*	–	L	
12202	X	0.64 2.3 II	M	20 6	U	– –	– –	– –	PCB
12203	X	0.64 2.3 II	F	20 6	U	12750* 12340*	– –	L L,Y	
12204	X	1.0 III	M	6	U	12670*	–	L	
12205	X	2.3 II	M	12	U	–	–	–	PCB
12206	X	2.3 II	M	16	U	–	–	–	PCB
12207	X	1.0 III 2.3 II	M	26 8	U	– –	– –	– –	PCB
12208	X	1.0 III	M	6	U	–	–	–	PCB
12209	O	1.0 III	F	6	U	12690*	–	L	
12210	X	1.0 III	M	4	U	–	–	–	PCB
12211	O	1.0 III	F	4	U	12690*	–	L	
12212	X	1.0 III	M	4	U	12670*	–	L	
12213	X	0.64	M	40	U	–	–	–	PCB
12214	X	0.64	M	24	U	–	–	–	PCB

HOUSING PART NUMBER LIST

Part No. of Connector Body	Supply	Terminal	Male Female	Cav. No.	Sealing Ability	Part No. of Repair Wire		Sleeve Color	Memo
						160 mm Type	500 mm Type		
90980–						82998–	82998–		
12215	X	0.64	M	24	U	–	–	–	PCB
12216	X	0.64	M	8	U	–	–	–	PCB
12217	X	0.64	F	8	U	12750*	–	L	
12218	X	PAI 1	M	2	U	–	–	–	
12219	X	PAI 1	F	2	U	–	–	–	
12220	X	0.64	M	8	U	–	–	–	PCB
12221	X	0.64	F	8	U	12750*	–	L	
12222	X	0.64	F	12	U	12750*	–	L	
12223	X	PAI 1	M	2	U	–	–	–	
12224	X	PAI 1	F	2	U	–	–	–	
12225	X	0.64	F	4	U	12750*	–	L	Splash Proof
12226	X	1.0 III 2.3 II	F	6 4	U	12690* 12340*	– –	L L,Y	
12227	X	9.5	M	3	S	–	–	–	
12228	X	9.5	F	3	S	–	–	–	
12230	X	LA	F	1	S	–	–	–	
12231	X	LA	F	1	S	–	–	–	
12232	X	0.64 1.0 IV	M	108 27	U	– –	– –	– –	PCB
12233	X	0.64 2.3 II	M	20 6	U	– –	– –	– –	PCB
12234	X	4.8	M	3	S	12470	–	Y	
12237	X	4.8	F	3	S	12480	–	Y	
12241	X	0.64	F	2	U	12750*	–	L	Splash Proof
12242	X	PAI 1	F	2	U	–	–	–	
12243	X	PAI 1	F	2	U	–	–	–	
12249	X	2.3 II	M	10	U	12330*	–	L,Y	
12250	X	0.64	M	11	U	–	–	–	
12251	X	0.64	F	11	U	12750*	–	L	
12252	X	0.64	M	16	U	–	–	–	
12253	O	PAI 1	F	2	U	–	–	–	
12258	X	0.64	M	20	U	–	–	–	PCB
12259	X	0.64	F	20	U	12750*	–	L	
12260	X	0.64	M	24	U	–	–	–	PCB
12269	X	0.64	M	12	U	–	–	–	PCB
12270	X	0.64	M	24	U	–	–	–	PCB
12271	X	1.0 III 2.3 II	F	20 6	U	12690* 12340*	– –	L L,Y	
12272	X	1.0 III	F	10	U	12690*	–	L	

HOUSING PART NUMBER LIST

Part No. of Connector Body	Supply	Terminal	Male Female	Cav. No.	Sealing Ability	Part No. of Repair Wire		Sleeve Color	Memo
						160 mm Type	500 mm Type		
90980–						82998–	82998–		
12273	X	1.0 III	F	6	U	12690*	–	L	
		2.3 II		6		12340*	–	L,Y	
12274	X	1.0 III	F	18	U	12690*	–	L	
		2.3 II		18		12340*	–	L,Y	
12275	X	1.0 III	F	8	U	12690*	–	L	
		2.3 II		24		12340*	–	L,Y	
12276	X	1.0 III	F	24	U	12690*	–	L	
		2.3 II		14		12340*	–	L,Y	
12277	X	1.0 III	F	10	U	12690*	–	L	
		2.3 II		20		12340*	–	L,Y	
12278	X	4.8	F	1	U	12380	–	Y	
		1.0 III		6		12690*	–	L	
		2.3 II		18		12340*	–	L,Y	
12291	X	1.0 III	M	39	U	–	–	–	PCB
12296	X	0.64	F	3	U	12750*	–	L	

Repair Wire (Waterproof Type)

Type	1.0II	
	Male	Female
		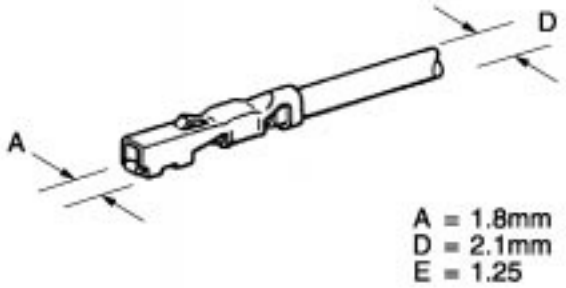
P/N		82998–24060
Type	**1.0III**	
	Male	Female
	Sleeve : Medium (Blue) 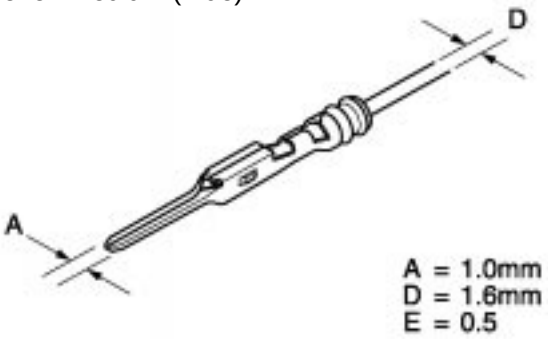	**Sleeve** : Medium (Blue) 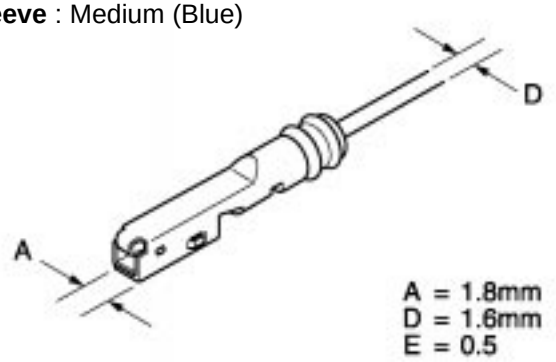
P/N	82998–12710	82998–12720 82998–12730*
Type	**1.3**	
	Male	Female
	Sleeve : Medium (Blue) 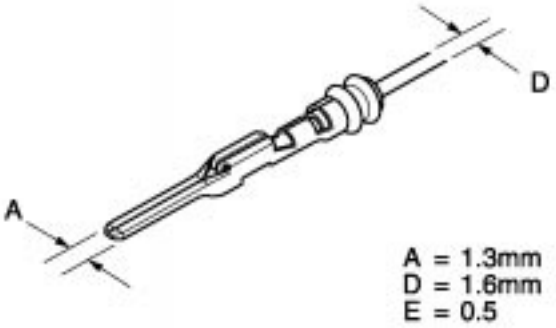	**Sleeve** : Medium (Blue) 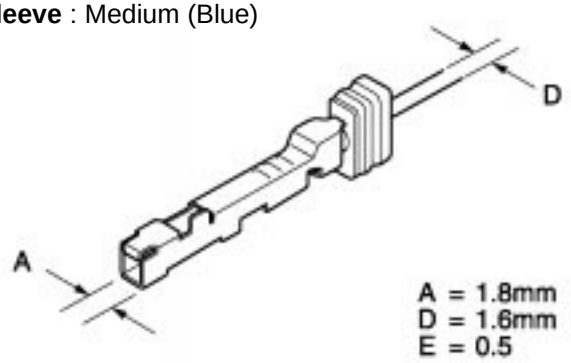
P/N	82998–12630	82998–12650

F

Repair Wire (Waterproof Type)

Type	1.8	
	Male	Female
		Sleeve : Medium (Blue) 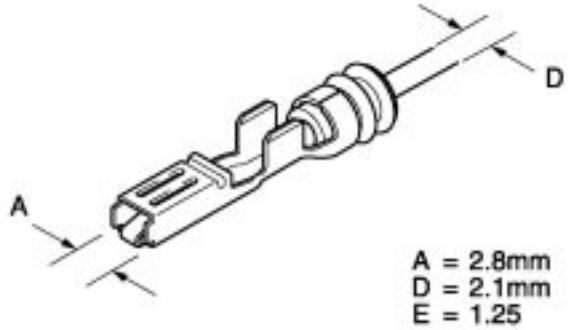
P/N		82998–12620
Type	2.3	
	Male	Female
	Sleeve : Medium (Blue) 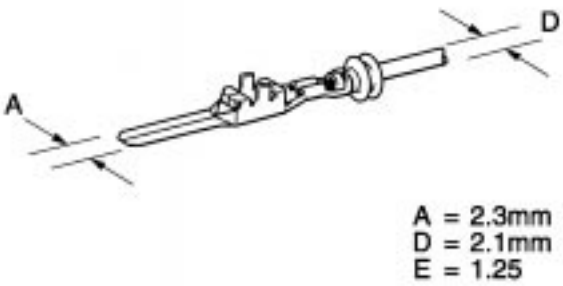 	**Sleeve** : Medium (Blue) 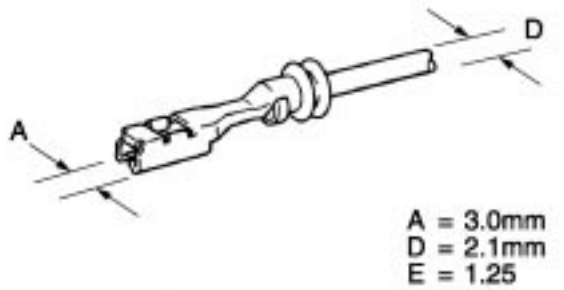
P/N	82998–12260 82998–24070*	82998–12270(160mm) 82998–12600(500mm) 82998–24080*
Type	2.3II (6mm Pitch Type)	
	Male	Female
	Sleeve : Medium (Blue) or Large (Yellow) 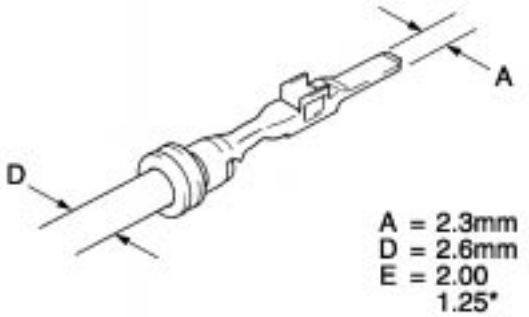 	**Sleeve** : Medium (Blue) or Large (Yellow) 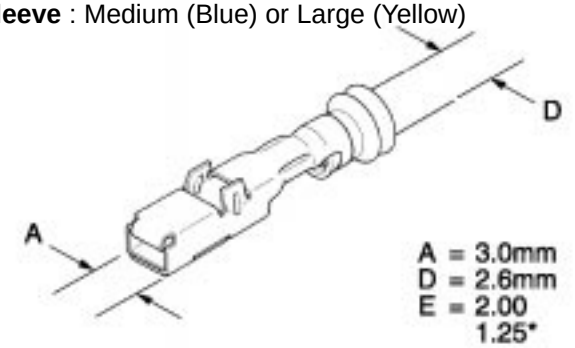
P/N	82998–12430 82998–12450*	82998–12440(160mm) 82998–12590(500mm) 82998–12460*

F

Repair Wire (Waterproof Type)

Type	2.3II (5mm Pitch Type)	
	Male	Female
		Sleeve : Medium (Blue) or Large (Yellow) 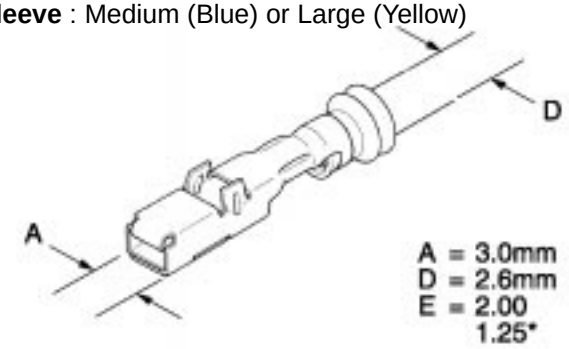
P/N		82998–12790 82998–12780*
Type	4.8	
	Male	Female
	Sleeve : Large (Yellow) 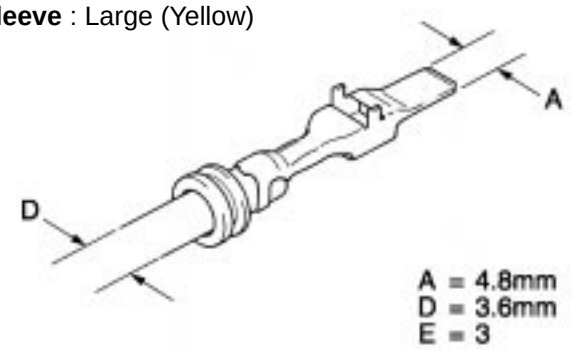 	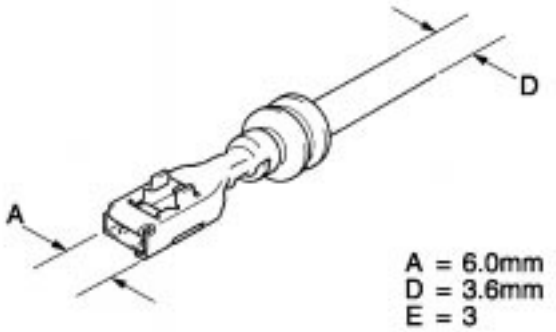
P/N	82998–12470	82998–12480
Type	6.3	
	Male	Female
		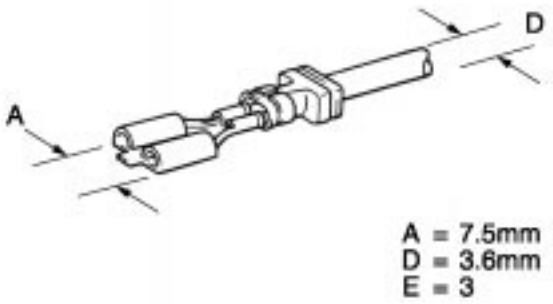
P/N		82998–12540

F

Repair Wire (Waterproof Type)

Type	6.3II	
	Male	Female
		Sleeve : Medium (Blue) 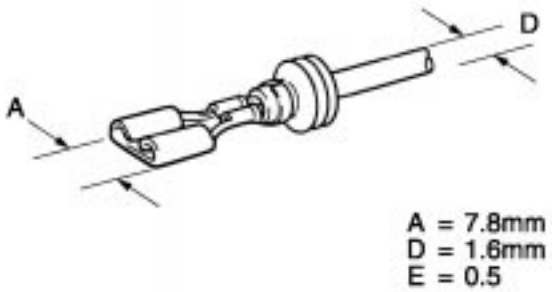
P/N		82998–24160
Type	8.0	
	Male	Female
	Sleeve : Large (Yellow) 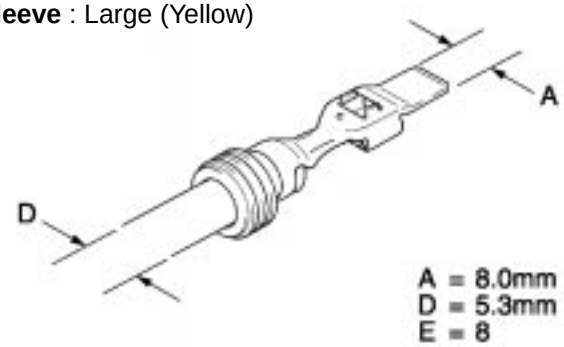 	**Sleeve** : Large (Yellow) 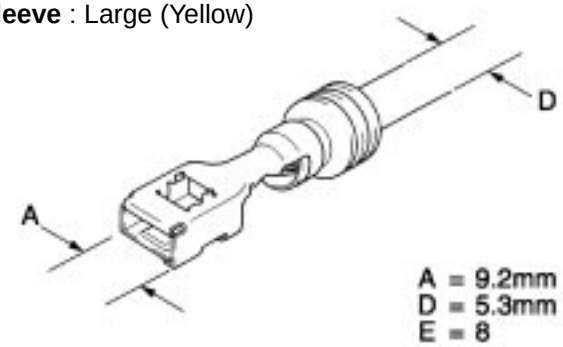
P/N	82998–12490	82998–12500
Type	HEAD LAMP	
	Male	Female
		Sleeve : Medium (Blue) or Large (Yellow) 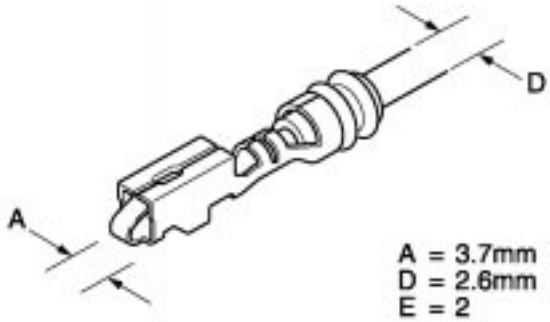
P/N		82998–24150(160mm) 82998–24190(500mm)

F

Repair Wire (Waterproof Type)

Type	HB3, HB4	
	Male	Female
		Sleeve : Medium (Blue) or Large (Yellow) 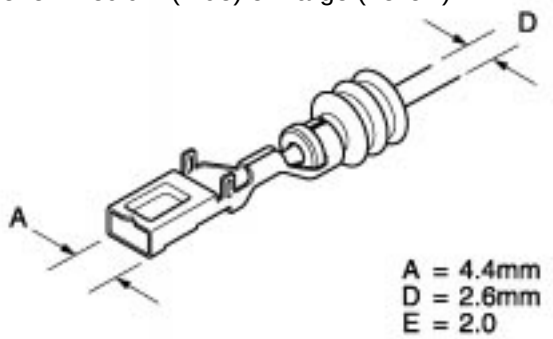
P/N		82998–12550(160mm) 82998–12610(500mm)
Type	TLC	
	Male	Female
	Sleeve : Small (Red) 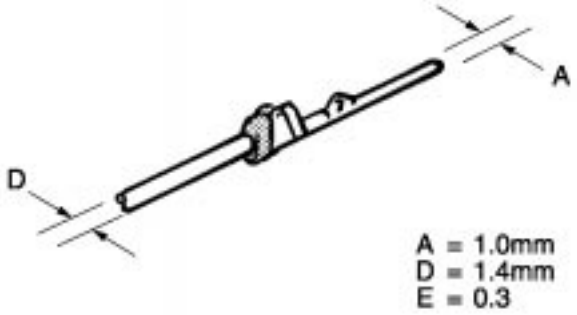 	**Sleeve** : Small (Red) 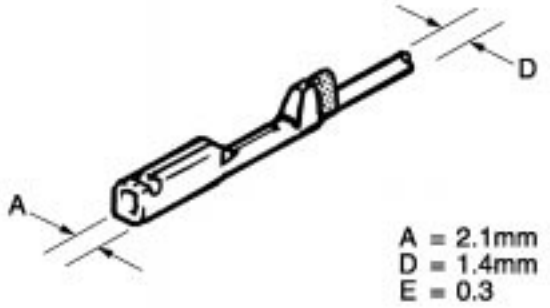
P/N	82998–12280	82998–12290

F

Repair Wire (Non–waterproof Type)

Type	0.64	
	Male	Female
		Sleeve : Medium (Blue) 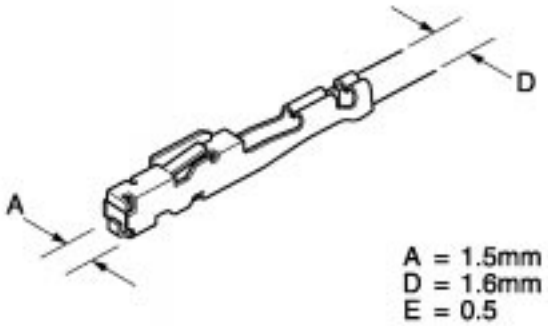
P/N		82998–12750 82998–12760*
Type	0.64 IDC	
	Male	Female
		Sleeve : Medium (Blue) 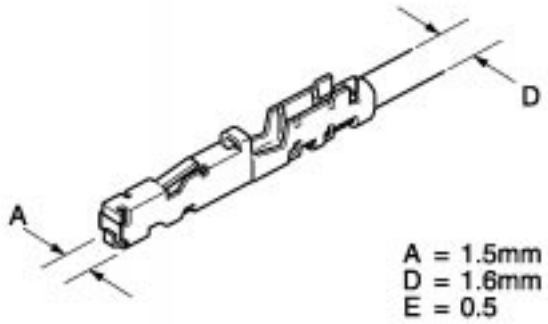
P/N		82998–12770
Type	1.0	
	Male	Female
		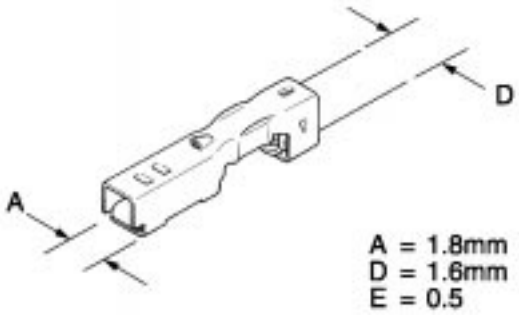
P/N		82998–12310 82998–12320*

F

Repair Wire (Non–waterproof Type)

Type	1.0II	
	Male	Female
	Sleeve : Medium (Blue) 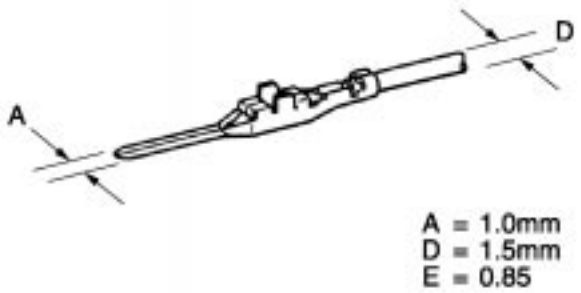 	**Sleeve** : Medium (Blue) **Size : S** 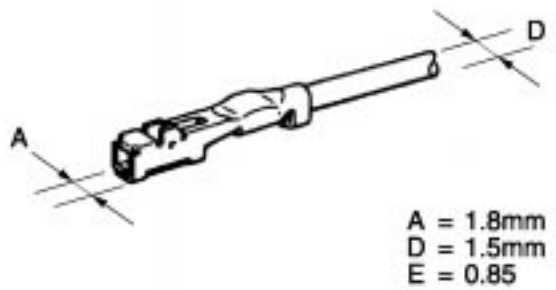
P/N	82998–24010	82998–24020 82998–24110*

Type	1.0II	
	Male	Female
		Sleeve : Medium (Blue) **Size : M** 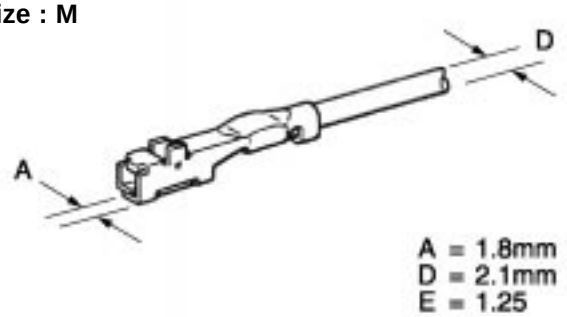
P/N		82998–24120*

Type	1.0III	
	Male	Female
	Sleeve : Medium (Blue) 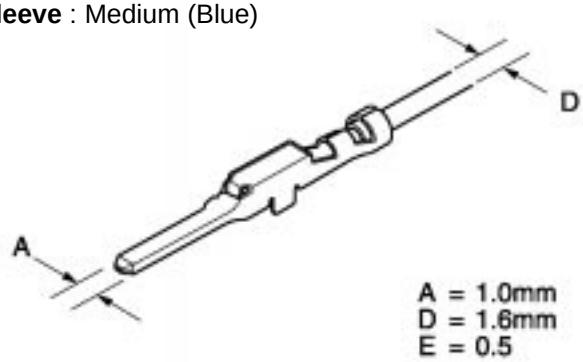 	**Sleeve** : Medium (Blue) 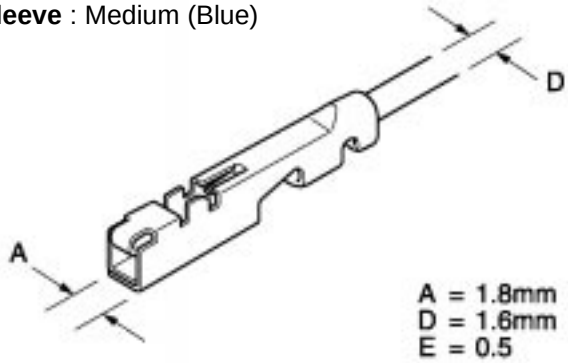
P/N	82998–12670 82998–12680*	82998–12690 82998–12700*

F

Repair Wire (Non–waterproof Type)

Type	1.0III IDC	
	Male	Female
	Sleeve : Medium (Blue) 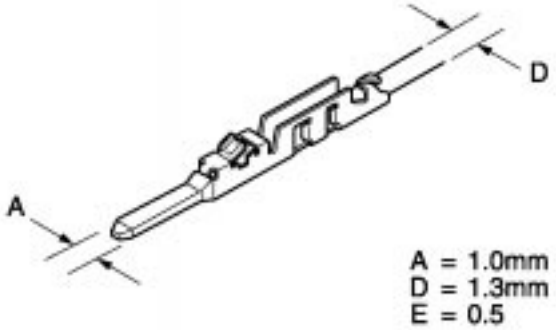 	**Sleeve** : Medium (Blue) 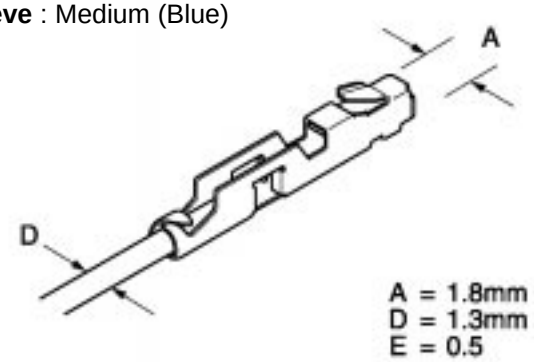
P/N	82998–12660	82998–12640
Type	1.0IV	
	Male	Female
		Sleeve : Medium (Blue) 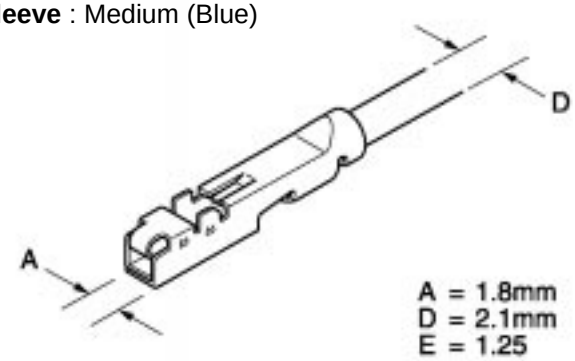
P/N		82998–12740
Type	1.3	
	Male	Female
	Sleeve : Medium (Blue) 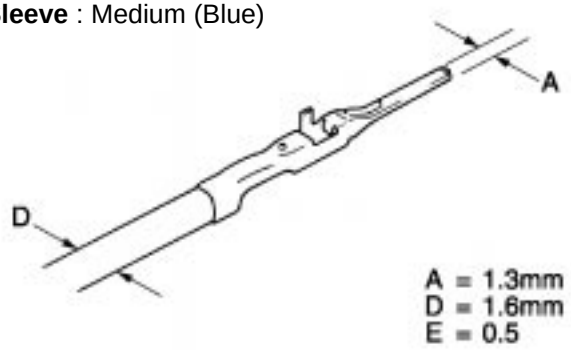 	**Sleeve** : Medium (Blue) 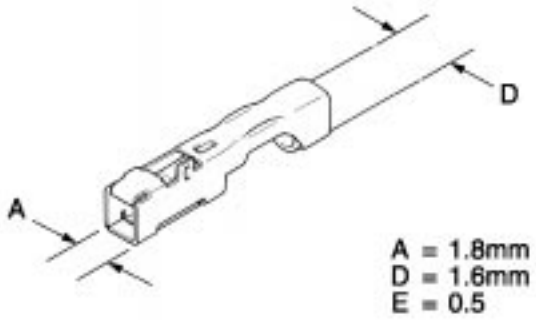
P/N	82998–12410	82998–12420

F

Repair Wire (Non–waterproof Type)

Type	1.8	
	Male	Female
	Sleeve : Medium (Blue) 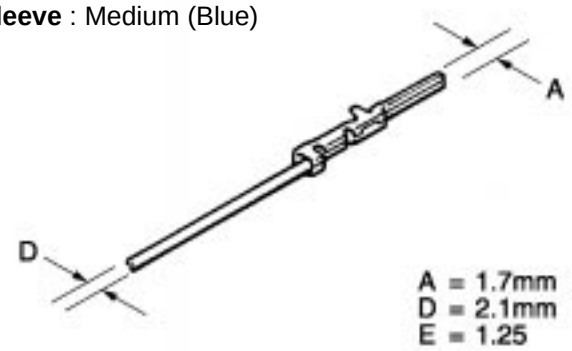 	**Sleeve** : Medium (Blue) 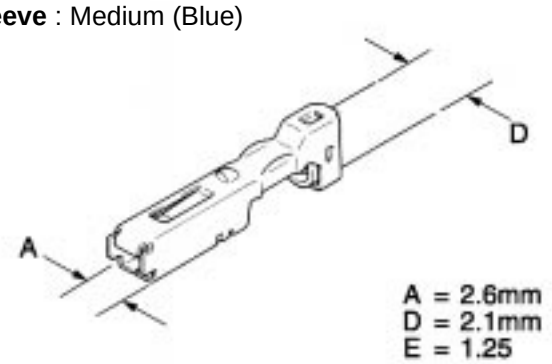
P/N	82998–12180	82998–12190 82998–12300*
Type	1.8II	
	Male	Female
	Sleeve : Medium (Blue) or Large (Yellow) **Size : S, M** 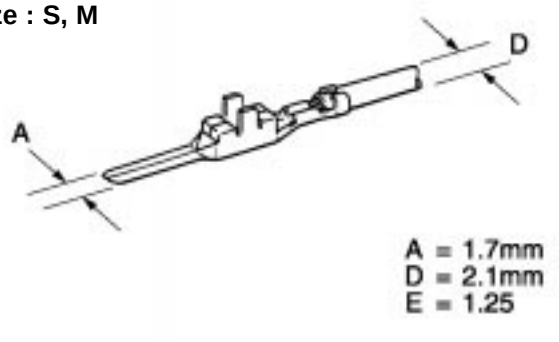 	**Sleeve** : Medium (Blue) or Large (Yellow) **Size : S, M** 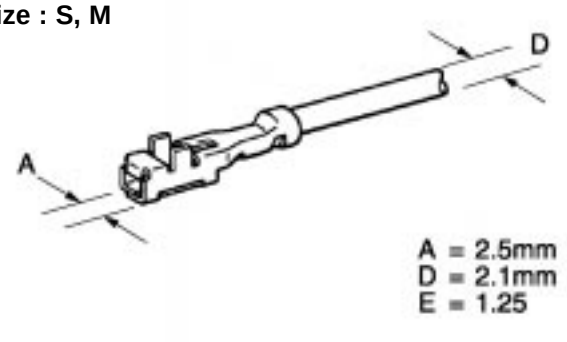
P/N	82998–24090 82998–24130*	82998–24100
Type	1.8II	
	Male	Female
	Sleeve : Medium (Blue) or Large (Yellow) **Size : L** 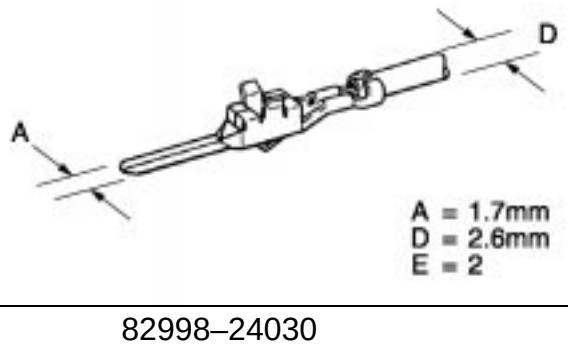 	**Sleeve** : Medium (Blue) or Large (Yellow) **Size : L** 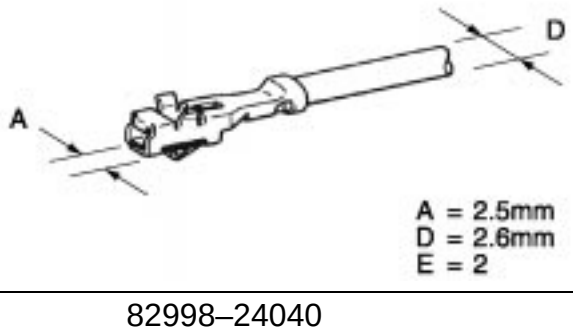
P/N	82998–24030	82998–24040

F

Repair Wire (Non–waterproof Type)

Type	2.3	
	Male	Female
	Sleeve : Medium (Blue) 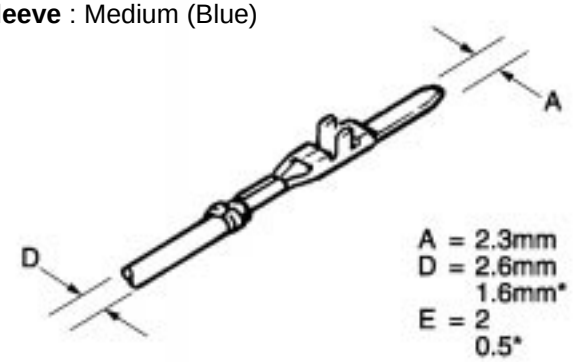 	**Sleeve** : Medium (Blue) 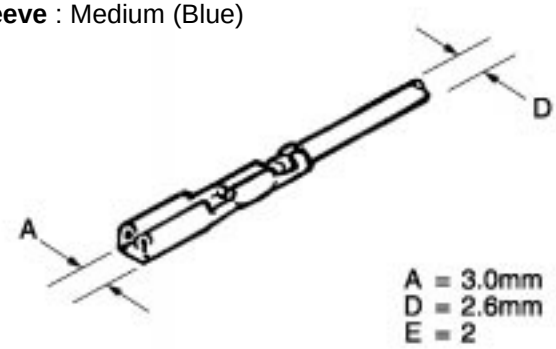
P/N	82998–12160 82998–24050*	82998–12170
Type	2.3II	
	Male	Female
	Sleeve : Medium (Blue) or Large (Yellow) 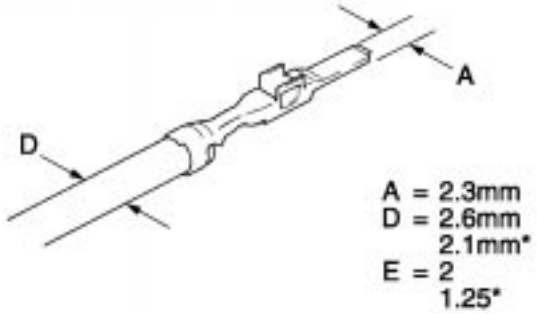 	**Sleeve** : Medium (Blue) or Large (Yellow) 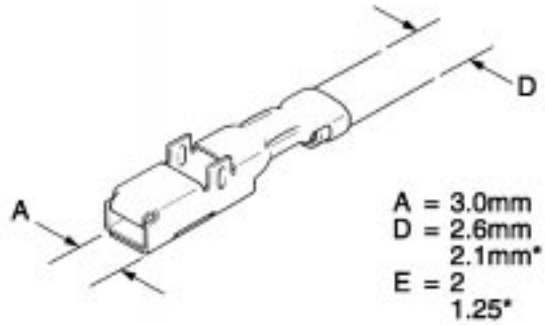
P/N	82998–12330 82998–12350*	82998–12340 82998–12360*
Type	2.3II IDC	
	Male	Female
		Sleeve : Medium (Blue) 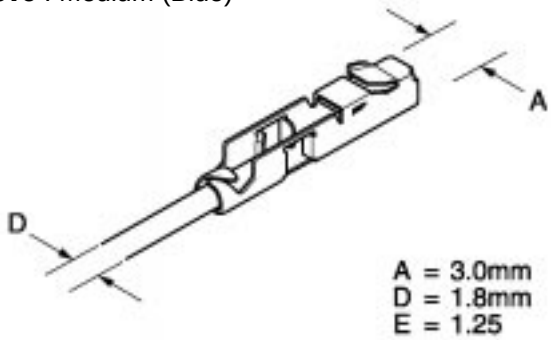
P/N		82998–24220

Repair Wire (Non–waterproof Type)

Type	4.8	
	Male	Female
	Sleeve : Large (Yellow) 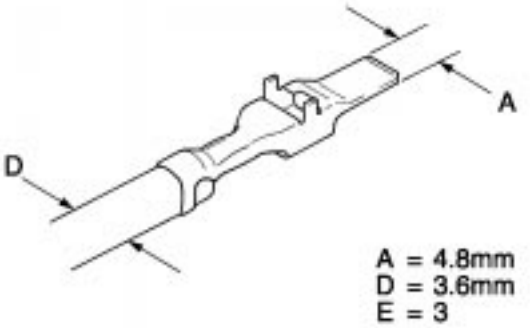 	**Sleeve** : Large (Yellow) 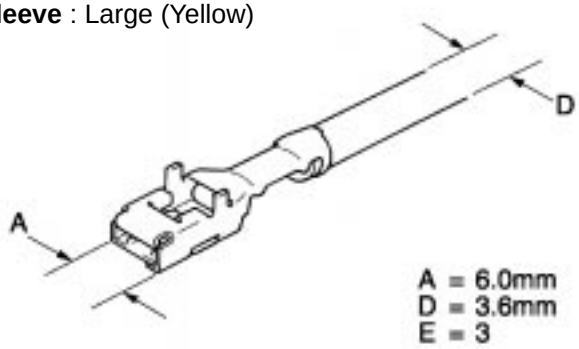
P/N	82998–12370	82998–12380
Type	6.3	
	Male	Female
	Sleeve : Large (Yellow) 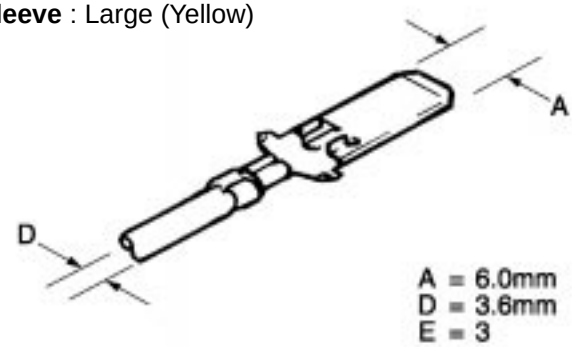 	**Sleeve** : Large (Yellow) 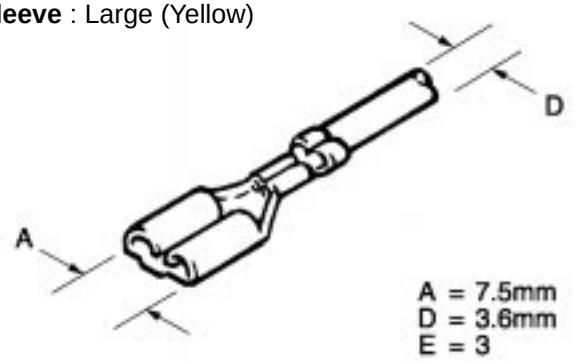
P/N	82998–12050	82998–12060(160mm) 82998–12580(500mm)
Type	6.3	
	Male	Female
		Sleeve : Large (Yellow) 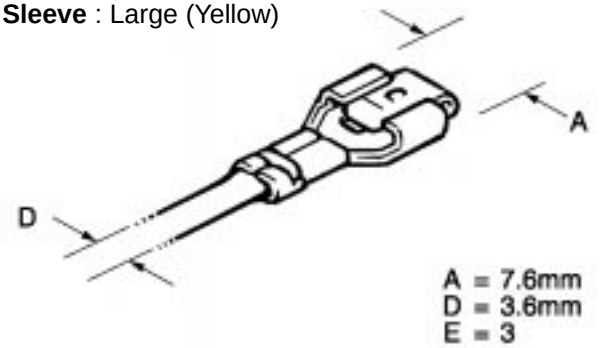
P/N		82998–12070

Repair Wire (Non–waterproof Type)

Type	6.3II	
	Male	Female
		Sleeve : Large (Yellow) 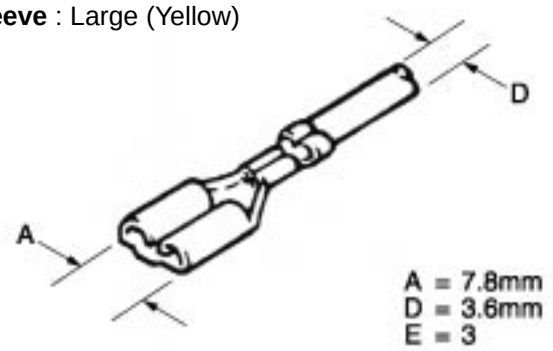
P/N		82998–24170
Type	7.7 Terminal Lance	
	Male	Female
	Sleeve : Large (Yellow) 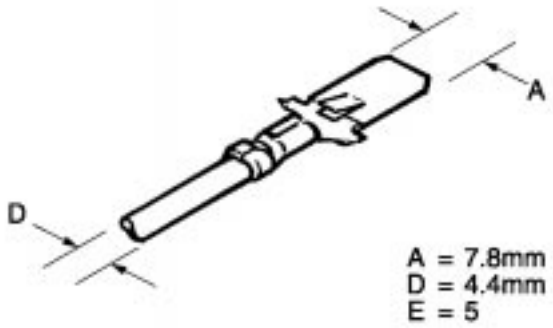 	**Sleeve** : Large (Yellow) 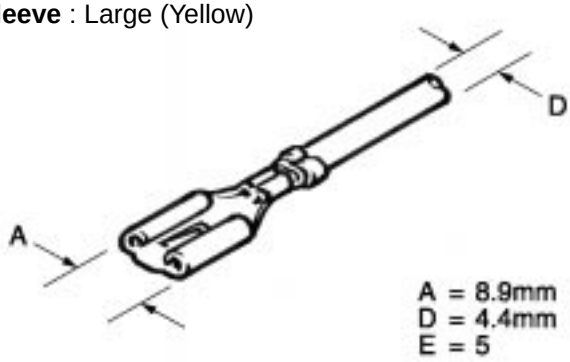
P/N	82998–12010	82998–12020
Type	7.7 Housing Lance	
	Male	Female
	Sleeve : Large (Yellow) 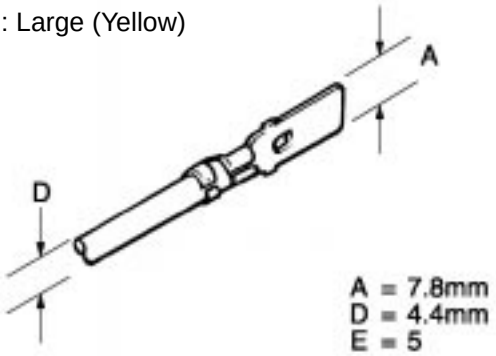 	**Sleeve** : Large (Yellow) 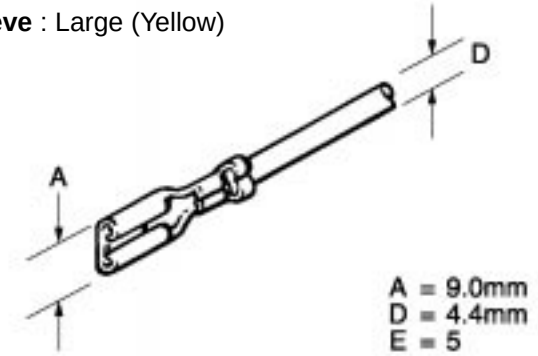
P/N	82998–12030	82998–12040

Repair Wire (Non–waterproof Type)

Type	8.0	
	Male	Female
	Sleeve : Large (Yellow) 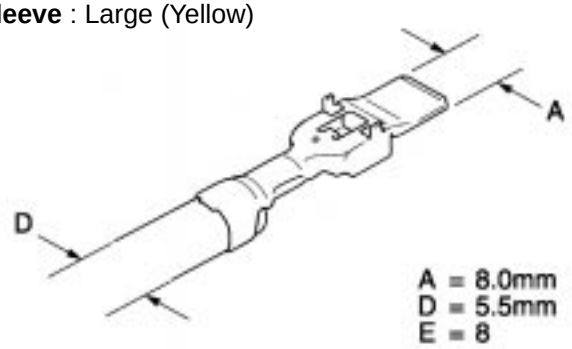 	**Sleeve** : Large (Yellow) 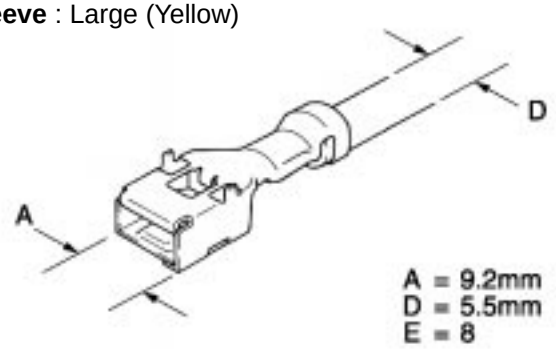
P/N	82998–12390	82998–12400
Type	BLADE FUSE	
	Male	Female
		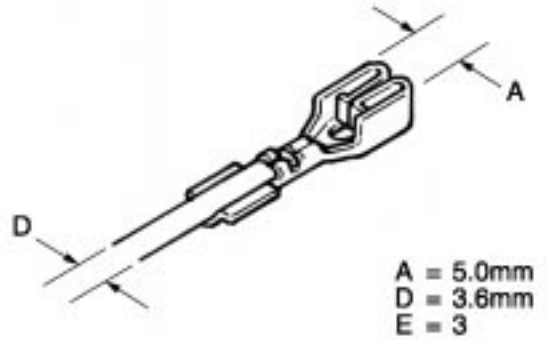
P/N		82998–12140
Type	C–Type	
	Male	Female
	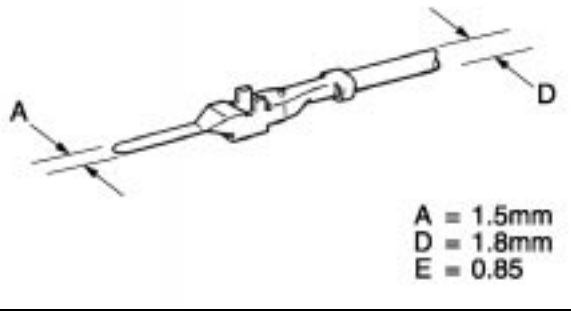 	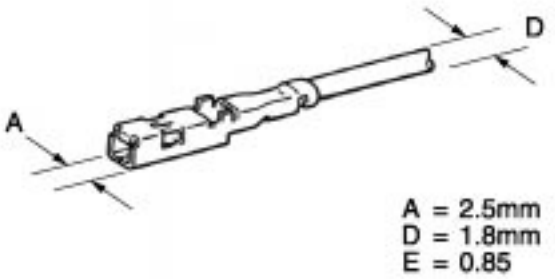
P/N	82998–12560	82998–12570

Repair Wire (Non–waterproof Type)

Type	FOG–LP	
	Male	Female
		Sleeve : Medium (Blue) or Large (Yellow) 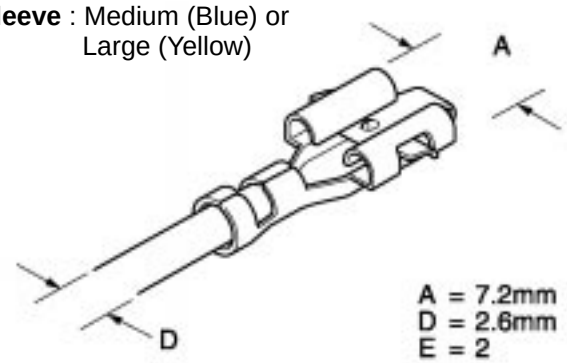
P/N		82998–24210
Type	**FTC**	
	Male	Female
		Sleeve : Medium (Blue) or Large (Yellow) 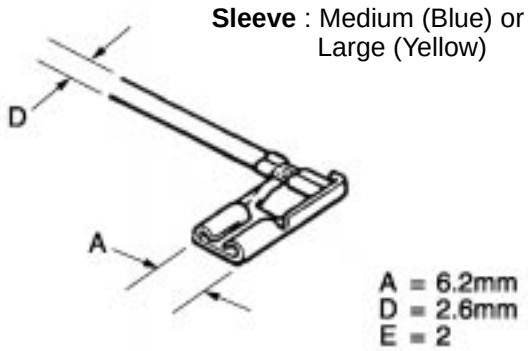
P/N		82998–12510
Type	**HEAD LAMP**	
	Male	Female
		Sleeve : Medium (Blue) or Large (Yellow) 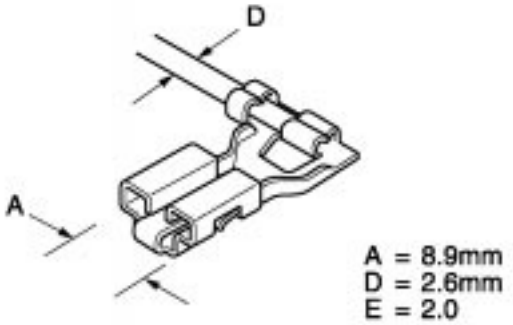
P/N		82998–24140(160mm) 82998–24200(500mm)

Repair Wire (Non–waterproof Type)

Type	LAC	
	Male	Female
	Sleeve : Medium (Blue) or Large (Yellow) 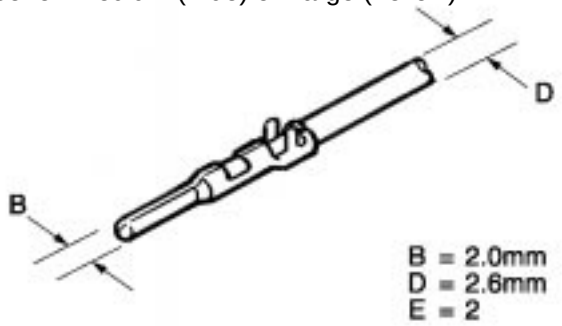 	**Sleeve** : Medium (Blue) or Large (Yellow) 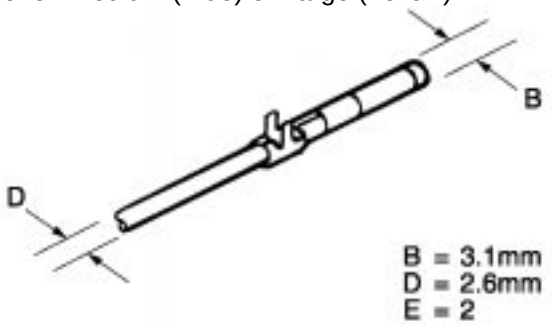
P/N	82998–12100	82998–12110
Type	MFPC	
	Male	Female
		Sleeve : Medium (Blue) 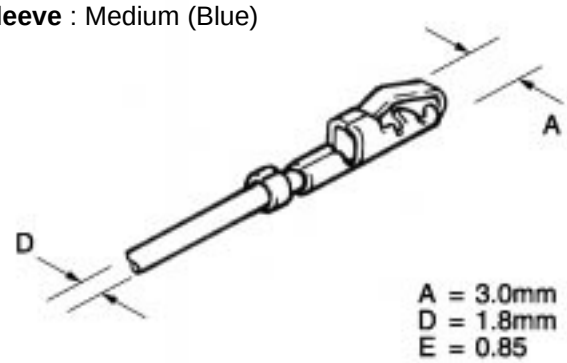
P/N		82998–12150
Type	MIC	
	Male	Female
		Sleeve : Medium (Blue) or Large (Yellow) 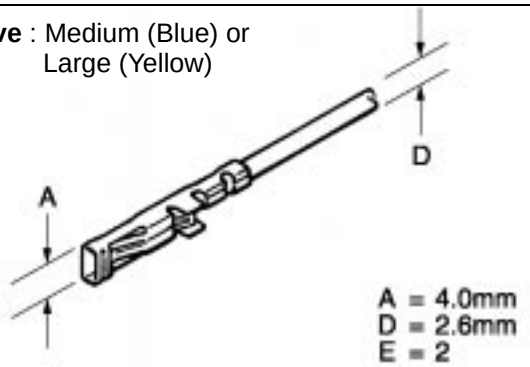
P/N		82998–12120

Repair Wire (Non–waterproof Type)

Type	PULSE LOCK	
	Female (Power)	Female (Signal)
	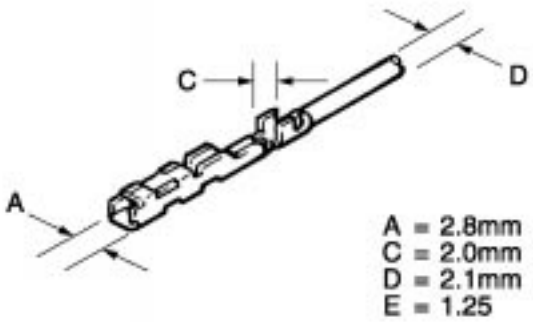	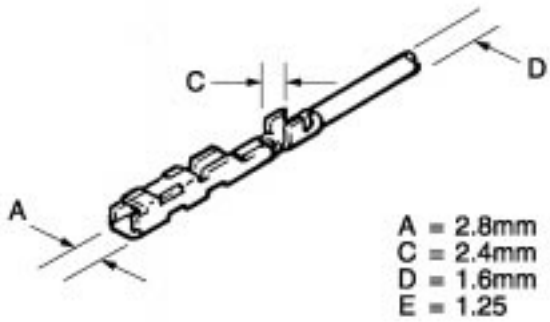
P/N	82998–12200	82998–12210
Type	SFPC	
	Male	Female
		Sleeve : Medium (Blue) 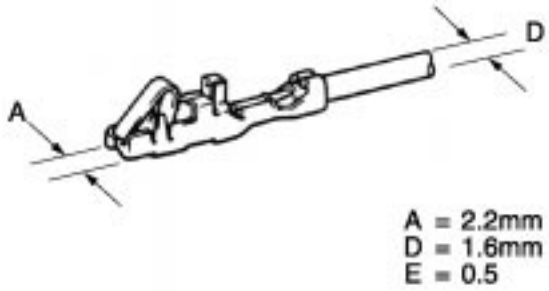
P/N		82998–24180
Type	SL	
	Male	Female
		Sleeve : Medium (Blue) or Large (Yellow) 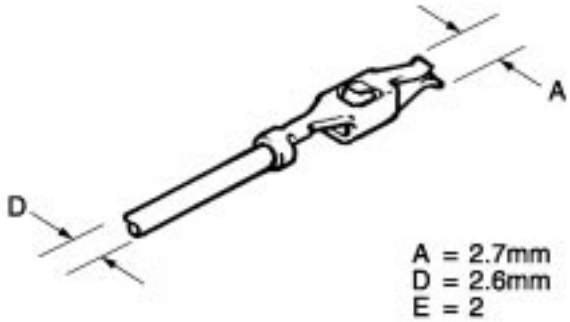
P/N		82998–12130

Repair Wire (Non–waterproof Type)

Type	SP	
	Female (Power)	Female (Signal)
	Sleeve : Medium (Blue) or Large (Yellow) 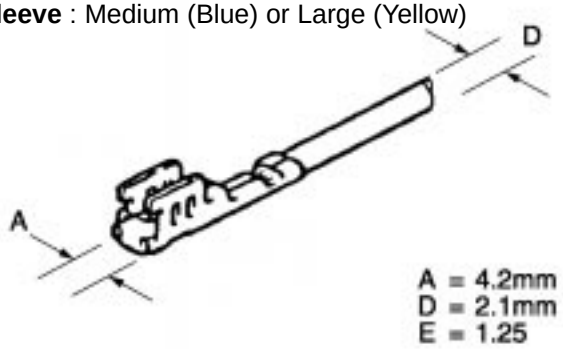 	**Sleeve** : Medium (Blue) or Large (Yellow) 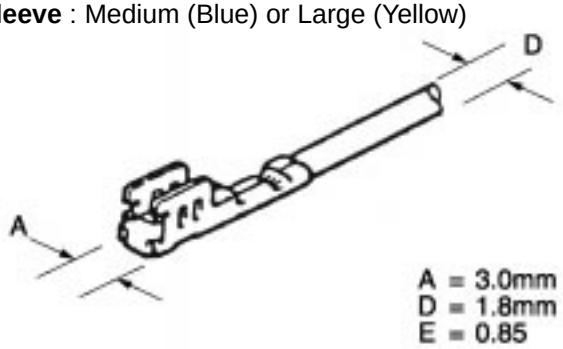
P/N	82998–12520	82998–12530
Type	**TLC**	
	Male	Female
	Sleeve : Medium (Blue) 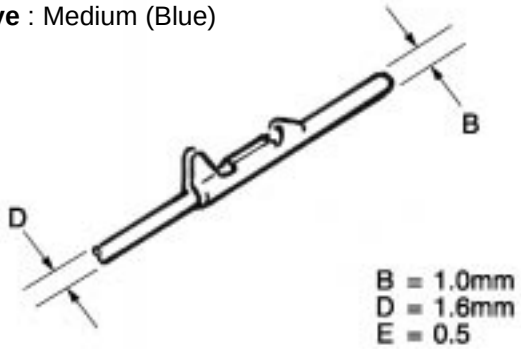 	**Sleeve** : Medium (Blue) 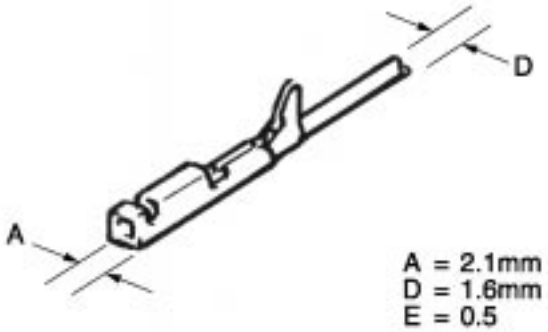
P/N	82998–12220	82998–12230
Type	**TNS**	
	Male	Female
	Sleeve : Medium (Blue) 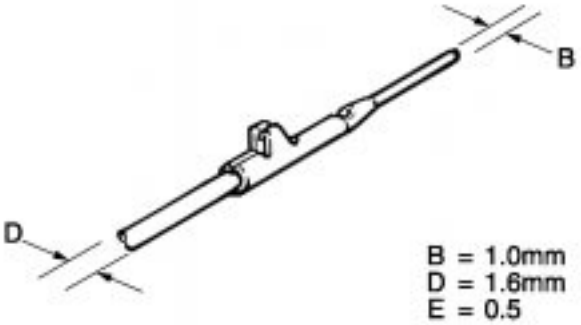 	**Sleeve** : Medium (Blue) 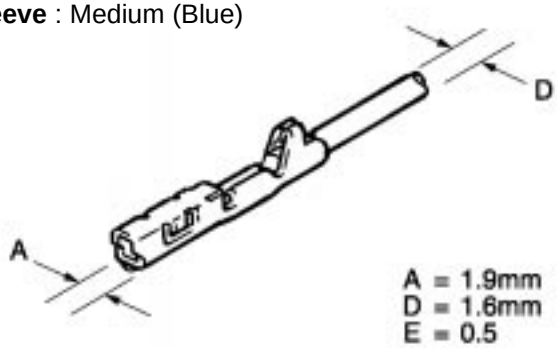
P/N	82998–12240	82998–12250

Repair Wire (Non–waterproof Type)

Type	TODC	
	Male	Female
	Sleeve : Medium (Blue) or Large (Yellow) 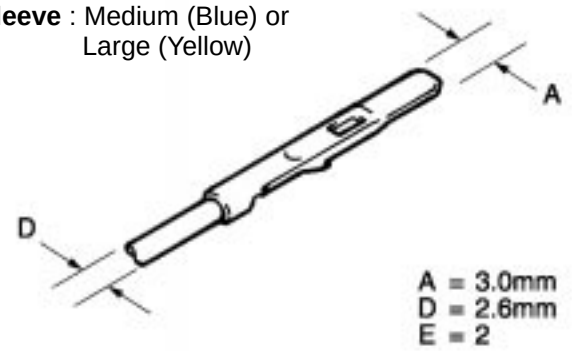 	**Sleeve** : Medium (Blue) or Large (Yellow) 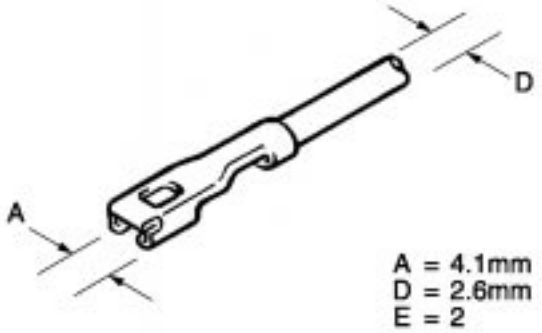
P/N	82998–12080	82998–12090

WIRE HARNESS REPAIR KIT WITH CASE (REFERENCE ONLY)

We would like to recommend to you use of the ”Wire Harness Repair Kit with the Case” according to your after service market demand.

Example:

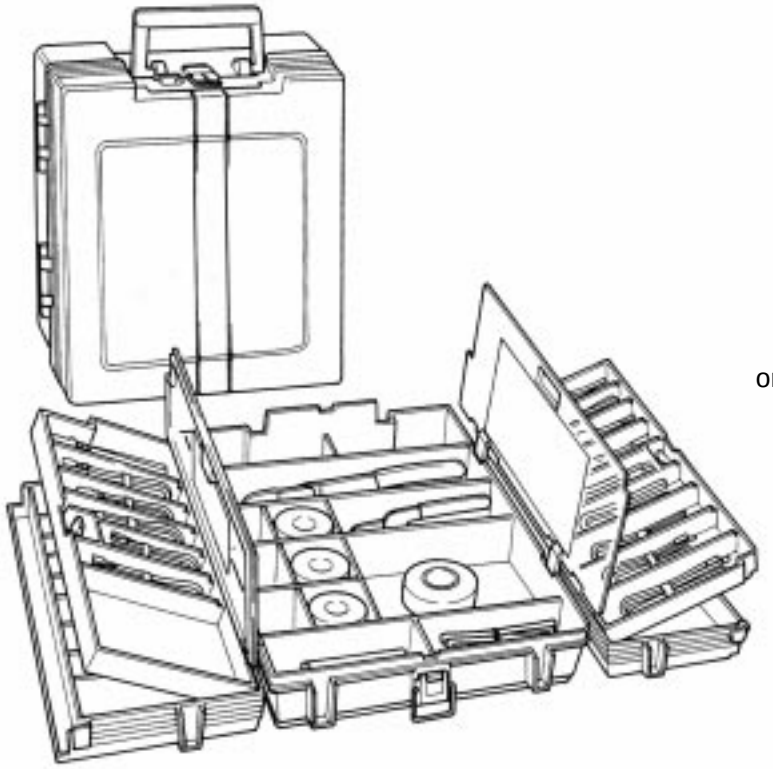

or

[portable type] [stationary type]

Remark: This kind of kit is not available from Toyota Motor Corporation.

REPORTING OF WIRE HARNESS PROBLEM

It is more difficult to understand the cause of wire harness problems and to make production improvements, due to the number of wire harness routings and connectors and their wide scope of use.
The position of the problem occurrence and the problem cause will be very clear if you proceed with wire harness/connector repairs.
We request that when you perform repairs, you fill in the attached ”WIRE HARNESS/CONNECTOR PROBLEM CHECK SHEET” and send it to your distributor.
Toyota Motor Corporation will be able to make production improvements more quickly and surely based on the results of the above mentioned reports (Check Sheets).

WIRE HARNESS/CONNECTOR PROBLEM CHECK SHEET page 1/3

Please use the TOYOTA ELECTRICAL WIRING DIAGRAM (EWD) manual to answer this questionnaire accurately.

Dealer Name _____ Dealer Code _____

Full Model Code _____ Frame No. _____

P/D ____/____ km-reading/Mileage Date of Problem ____/____/____

Customer Complaint: _____

Electrical Component with Problem: _____

Condition: ☐ Intermittent operation ☐ Inoperative ☐ Others

Symptom: ☐ Short ☐ Open circuit ☐ Moisture

☐ Others (Eg.Rattle,Noise etc. - Please proceed to "Box B" on next page.)

CONNECTOR PROBLEM:

Please fill in the required information in the brackets and check the appropriate box.

EWD page ( )
CONNECTOR NO.( )

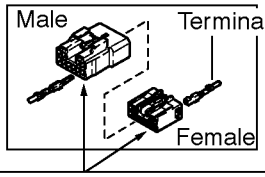

☐ TERMINAL
- ☐ Male ☐ Female
- PIN No. ( )
- WIRE COLOR ( )

☐ TERMINAL MISSING (Terminal Coming off)
☐ TERMINAL BROKEN
☐ TERMINAL BENT (Male)
☐ TERMINAL EXPANDED (Female)
☐ WIRE POORLY CRIMPED AT TERMINAL
☐ CORROSION, RUST, MOISTURE
☐ POOR CONTACT
☐ OTHERS ( )

☐ NON-WATERPROOF TYPE
☐ WATERPROOF TYPE
→ WATER ENTERING FROM:
(☐ SEAL PACKING ☐ WIRE HARNESS
☐ TERMINAL PACKING ☐ UNCLEAR, OTHERS)

Please refer to Fig. 1

☐ BROKEN LOCKING CLIP OF CONNECTOR
☐ TERMINAL LOCKING CLIP MISSING
☐ TERMINAL RETAINER BROKEN
☐ SECONDARY LOCKING PLATE MISSING
☐ OTHERS; ( )

☐ CONNECTOR BODY
- ☐ Male ☐ Female

☐ NOT CONNECTED/HALF CONNECTED
☐ BROKEN CONNECTOR
☐ BROKEN LOCKING CLIP OF CONNECTOR
☐ OTHERS ( )

Fig.1

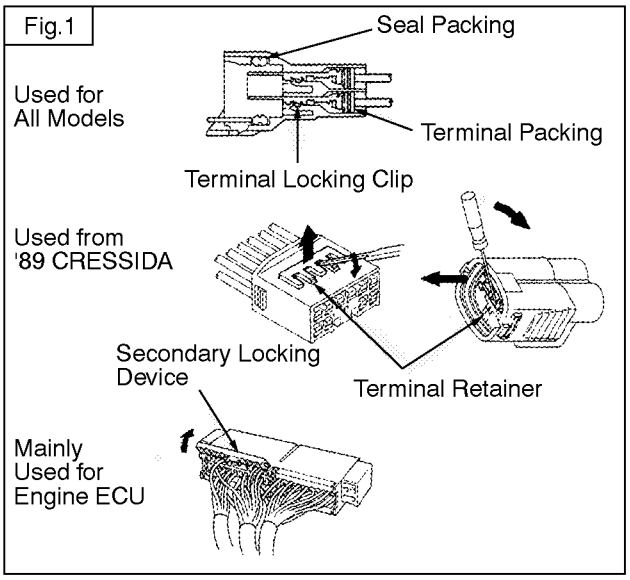

G

WIRE HARNESS PROBLEM:

page 2/3

Please fill in the required information in the brackets and check the appropriate box.

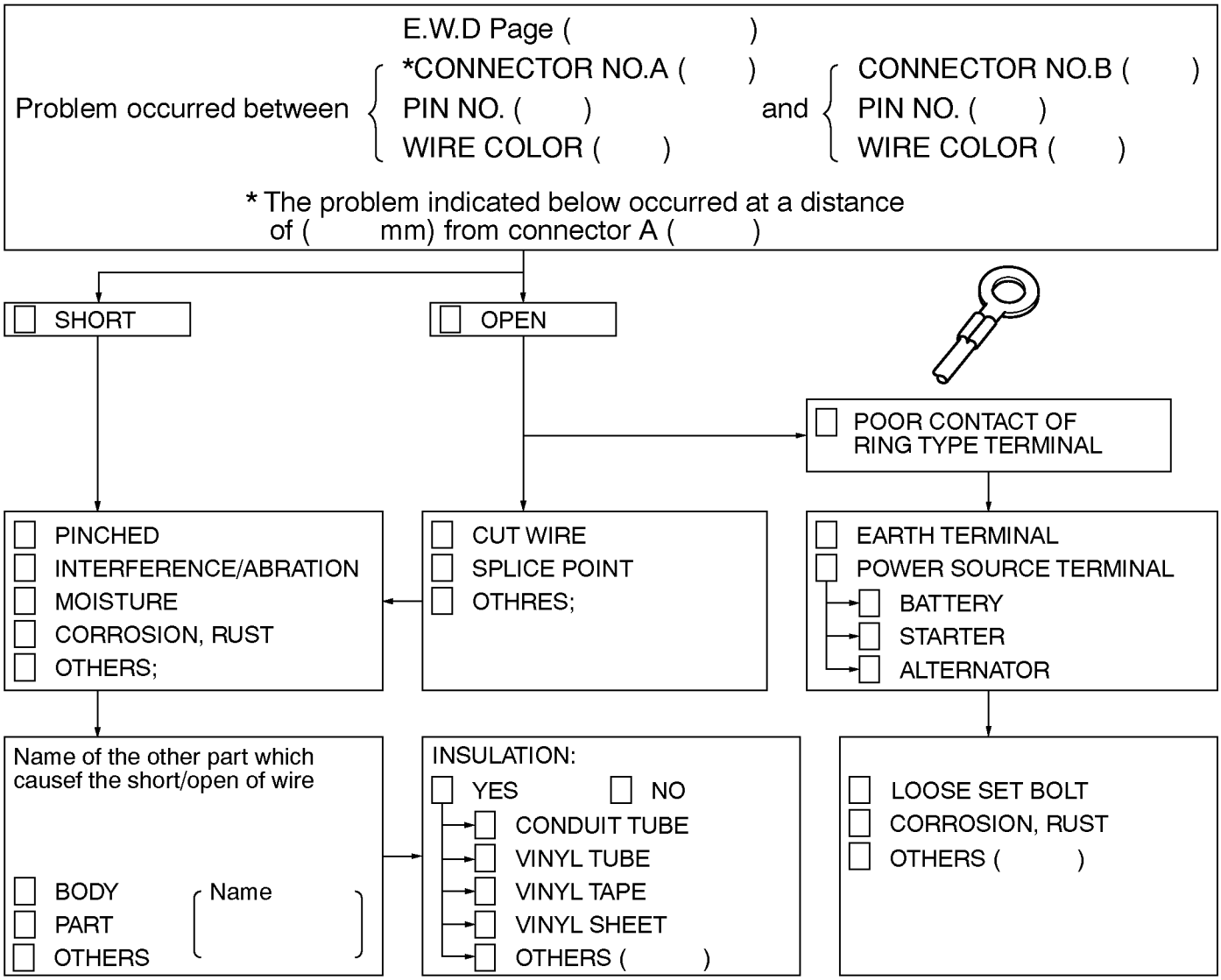

Note: If possible, attach an illustration or photo to show the part causing the short or open, and the position of the wire and the other part.
This will help to make the cause of the problem clear and help us to take prompt action.

Box B

If you checked the "Others" box in the "Symptom" section on page 3-1, please describe:

Symptom: _____

Condition: _____

Related Wire Harness or Connector;

Name or Part NO.: _____

Location: _____

REPAIR:

page 3/3

1. Please identify repair method:

Troubleshooting methods

☐ WIRING DIAGRAM
☐ VOLTMETER: ANALOG _____ , DIGITAL _____

2. Please check one box and fill in prethesis:

☐ REPLACE WIRE HARNESS

☐ REPLACE CONNECTOR OR TERMINAL
☐ REPAIR TERMINAL
☐ OTHERS ( )

WIRE HARNESS TOOLS
☐ CRIMPING PLIERS
☐ PICK
☐ OTHERS ( )

☐ SOLDER CONNECTION

3. Please attach a copy of the TOYOTA ELECTRICAL WIRING DIAGRAM for the vehicle repaired:

Indicate the affected connector number by arrow, or circle and identify the affected wire harness.

EXAMPLE: COROLLA (ZZE 110)

Condition: Engine does not start

Cause: Connector pin backed out from female connector at clutch start switch

Component: Clutch start awitch inoperation

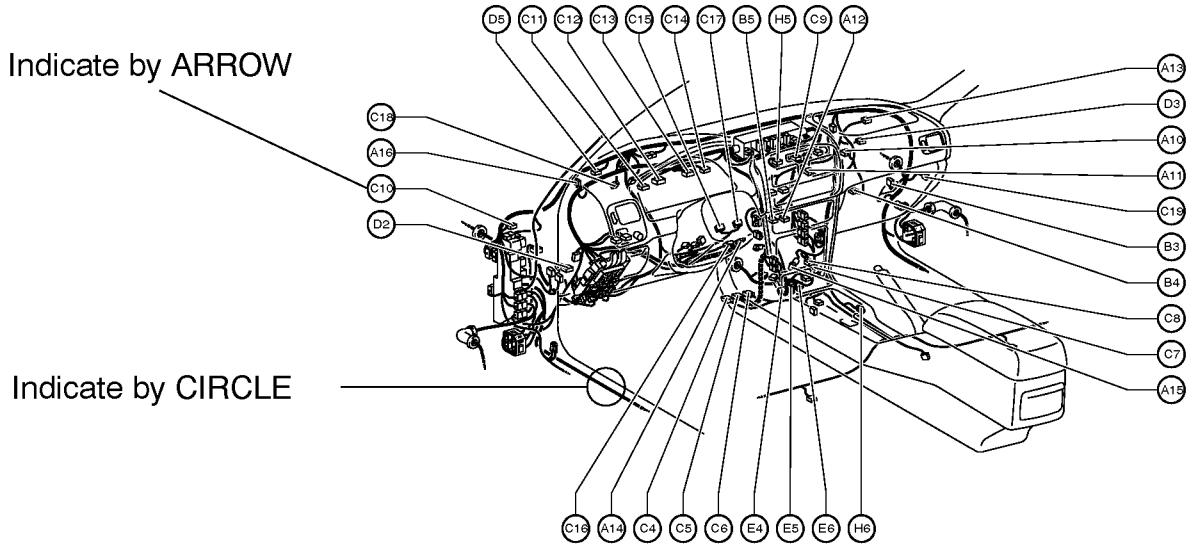

Waterproof Type [1]

(Cont. next page)

	1	2				3		4	5	6	7	8	9	10	11
1.0															
1.0 III		M:11863	F:11856												
1.3		M:11188 F:11189				M:11169 F:11170		M:11063 F:11065	M:11181 F:11182		M:11171 F:11172		M:11191 F:11192		M:11173 F:11174
								M:11064 F:11066							
1.8		F:10737						F:10711							
		F:11062													
2.3		M:10495 F:10496	M:10580	F:10609				M:10475 F:10476		M:10650					
		F:10474	M:10592	F:10532				M:10590							
		M:10575	F:10598	F:10572				M:10648							
2.3 II	M:10892 F:10893	M:10842 F:10843	M:11486 F:11019	M:11247 F:11248	F:11207	M:11015 F:11016	F:11143	M:10868 F:10869	M:11078 F:11077	M:10987 F:10988	M:10930 F:10931	M:10890 F:10891		F:11231	
	M:11006 F:11007	M:10886 F:10887	M:11029 F:11030	M:11272 F:11273	F:11235	M:11131 F:11132	F:11145	M:10941 F:10942	F:11024	M:11033 F:11034		M:10890 F:11190			
	M:11270 F:11271	M:10898 F:10899	M:11137 F:11038	F:10974	F:11246	M:11244 F:11245	F:11261	M:11027 F:11028	F:11049	M:11193 F:11194		M:10896 F:10897			
	F:11166	M:10900 F:10901	M:11050 F:11051	F:11025	F:11250	M:11295 F:11245	F:11294	M:11122 F:11037	F:11232	M:11196 F:11197					
	F:11243	M:11072 F:10923	M:11069 F:11070	F:11068	F:11255	F:10834	F:11349	M:11177 F:11178	F:11317	M:11289 F:11290					
	F:11363	M:10959 F:10947	M:11073 F:11075	F:11140	F:11285	F:10845	M:11348	M:11291 F:11292	F:11599	F:10854					
	F:11428	M:10948 F:10949	M:11074 F:11075	F:11149	F:12028	F:10902		F:10943		F:11144					
	F:11252	M:11002 F:11003	M:11141 F:11142	F:11153		F:10919		F:11150		F:11858					
		M:11004 F:11005	M:11155 F:11156	F:11154		F:10981		F:11152							
		M:11008 F:11009	M:11168 F:11162	F:11163		F:11020									

M : Male F : Female

Waterproof Type [1] (Cont'd)

	12	15	40	80											
1.0			F:11215	F:11214											
1.0 III															
1.3	F:11698	M:11088 F:11089													
1.8															
2.3															
2.3 II	M:11086 F:11087														
	F:11151														

M : Male F : Female

Waterproof Type [2]

	1	2		3		4	5	6	8	9	10	11	23	34	
4.8	M:10982 F:10983	M:10927 F:10928		M:10840 F:10841		M:10989 F:10990									
	F:11400	F:11237		M:10944 F:10841		M:11035 F:11036									
6.3	M:10246 F:10247	M:10156 F:10157		M:10347 F:10249											
7.7	M:10114 F:10115														
8.0	M:10836 F:10837	M:10838 F:10839													
	M:11183 F:11184	M:11031 F:11032													
HB3		F:11095	F:11659												
HB4		F:11096	F:11660												
PIN		M:11945													
TLC				F:10554	M:10577										
TODC	M:10240 F:10241			M:10244	F:10353										
1.0 III+4.8														F:12020	F:12021
2.3+6.3										F:10686					
2.3 II+4.8				M:11160 F:11161		M:10749 F:10844	M:10945 F:10946	F:10939	M:10894 F:10895	F:11643	F:11332	M:11239			
						F:10940	M:11021 F:11022			F:11784					
							M:11412 F:11413								
2.3 II+6.3 II													F:11195		
													F:11323		
2.3 II+8.0									M:11241 F:11242						
4.8+8.0				M:11044 F:11045		M:11138 F:11139									

M : Male F : Female

Non–waterproof Type [1]

(Cont. next page)

	1	2			3	4	5	6		7	8		9	10	11
1.0															
1.0 II															
1.0 III		M:11967 F:11919				F:11988	F:11921							F:11924	
							F:11909							F:11948	
1.3		M:11211 F:11212			M:11052 F:11053	M:11186 F:11187	F:11319	F:11616		F:11165	M:11532 F:11533	M:11623		F:11450	F:11041
		M:11368 F:11369			F:11471	F:11107					F:10630			F:11642	F:11083
		F:11436				F:11494								F:11657	
1.8															
1.8 II															
2.3		M:10437 F:10355			M:10573 F:10365	F:10504		M:10384 F:10414	F:10672					F:10322	
						F:10601								F:10669	
2.3 II	M:10870 F:10871	M:10824 F:10825	M:10905 F:10906	F:11080	M:10907 F:10908	M:10794 F:10795		M:10796 F:10797	F:10957	M:11528 F:11529	M:10798 F:10799		M:11534 F:11535	M:10800 F:10801	M:10829 F:10830
	M:11026 F:10871	M:10833 F:10825	M:10934 F:10935	F:11098	F:11071	M:10858 F:10795		M:11110 F:10797	F:10964					M:11102 F:10997	M:11538 F:11539
	M:11097 F:10871	M:11299 F:10825	M:11159 F:11148	F:11227	F:11079	M:11399 F:10795		M:11099 F:10933	F:11280					M:11536 F:11537	F:10966
	M:11146 F:11147	M:11300 F:10825	F:10823	F:11278		M:11012 F:11013		M:11101 F:10996						F:10822	
		M:10849 F:10850	F:10835	F:11608		M:11023 F:10904		M:10998 F:11001						F:10965	
		M:10859 F:10860	F:10855			M:11100 F:11090		M:11010 F:11011							
		M:11060 F:10860	F:10962			M:11085 F:10789		M:11587 F:11011							

M : Male F : Female

Non–waterproof Type [1] (Cont'd)

	12		13	14	15	16	17	18	19	20	21	22	25	28	34
1.0	F:11129					F:10764									
1.0 II	F:11408					F:11219						F:11220		F:11218	F:11221
						F:11391									
1.0 III				F:11925				F:11914				M:11962 F:11927			
				F:11911				F:11913				M:11926 F:11915			
1.3				M:11654 F:11556	F:11179	M:11573 F:11574			M:11570 F:11571		F:11125	M:11503 F:11502	M:11133 F:11055		
					F:11264							F:11628	F:11043		
1.8	F:10658	F:10973		F:10697				F:10656		F:10696					M:10722
	F:10743														
1.8 II	F:11424			F:11433											
2.3	M:10513 F:10432							M:10325 F:10326							
2.3 II	M:10802 F:10803		M:10804 F:10805	M:10806 F:10807	M:10827 F:10828	M:10808 F:10809	F:11417	M:10818 F:10819		M:10810 F:10811		M:10977 F:10875			
	M:11530 F:11531		M:11541 F:11542	F:10852		M:11167 F:10848				M:10820 F:10821		F:11552			
	F:10967		F:11604												
	F:10968														
	F:11121														
	F:11661														

M : Male F : Female

Non–waterproof Type [2]

	1	2	3	4	5	6		8	9	10	12	13	14	17	22
4.8	M:11258 F:11259	M:10915 F:10916	F:10980	M:11135 F:11136		M:10975 F:10976	F:11778	M:10963 F:10926		M:10861 F:10862					
	F:10911	M:11093 F:11094		M:11878 F:11742		F:11091		F:11092							
	F:10912					F:11583		F:11615							
								F:11686							
6.3	M:10178 F:10179	M:10213 F:10214	M:10283 F:10216			M:10172 F:10173		M:10174 F:10175		M:10176 F:10177					
	F:10619														
	F:10786														
	F:10792														
7.7		M:10356 F:10357													
8.0	M:10994 F:10995	M:10958 F:10903	F:10956	M:10866 F:10867											
		M:11655 F:11579	F:11314												
		F:11684	F:11685												
FOG–LP		F:10481													
FTC			F:10489		F:10487										
			F:10490		F:10488										
HEAD–LANP			F:10428												
LAC									F:10133			F:10132			M:10131
LC						M:10289									
MFPC				F:10645				F:10301		F:10302	F:10303		F:10369		
										F:10304	F:10372				

M : Male F : Female

Non–waterproof Type [3]

(Cont. next page)

	1	2	3	4	5	6	7	8	9	10	12	13	14	15	16
MIC				F:10378					F:10152			F:10062			
OBD II															F:11665
PULSE LOCK										F:10294	F:10351		F:10371		
SFPC										F:11116		F:11114			F:11113
												F:11115			
SL			F:10070				F:10071								
SP		F:10362			F:10376										
TLC						M:10401 F:10402				M:10719 F:10528					F:10635
TNS				M:10466 F:10467									M:10470 F:10471		
TODC	M:10182 F:10183				M:10040 F:10274				M:10044 F:10045						
1.0+1.8															
1.0 II+1.8 II													F:11225		F:11565
1.0 III+2.3 II															
1.3+2.3 II										M:11613				F:11042	
														F:11056	
2.3+6.3								F:10463							

M : Male F : Female

Non–waterproof Type [3] (Cont'd)

	17	18		20	22	23	24	25	26		32				
MIC	F:10037														
OBD II															
PULSE LOCK		F:10295					F:10296								
		F:10350													
SFPC															
SL															
SP															
TLC															
TNS					M:10552 F:10526				M:10599 F:10587						
TODC															
1.0+1.8					F:10765				F:10925	F:10918					
									F:10763						
1.0 II+1.8 II		M:11223 F:11226	M:11223 F:11224		F:11392				F:11390	F:11423	M:11222				
1.0 III+2.3 II								F:11877							
1.3+2.3 II	F:11671	F:11594		F:11469		M:10920 F:10921		M:11158 F:11058							
		F:11595		M:11504 F:11469		M:11208 F:10921									
2.3+6.3															

M : Male F : Female

Non–waterproof Type [4]

	4	5	6	8	10	11	12	14	15	16	19	20	24	26	
2.3 II+4.8	M:11126 F:11118	M:10985 F:10986		M:10876 F:10877	M:11596 F:11527	M:10872 F:10873	M:10878 F:10879	M:10812 F:10813	M:10814 F:10815	M:10884 F:10885	M:10882 F:10883	M:10816 F:10817	M:10880 F:10881	M:11631	
				F:11130	F:10993		F:10932								
				F:11279											
				F:11701											
2.3 II+8.0			M:10909 F:10910								M:10856 F:10857				
4.8+8.0		F:10888	F:10889												
6.3+7.7			F:10447												

M : Male F : Female

Terminal Packing

Type	6.3	
Cav. No.	1	3
P/N	90980–09210	90980–09211
Type	7.7	
Cav. No.	1	
P/N	90980–09380	
Type	TODC	
Cav. No.	1	3
P/N	90980–09378	90980–09379

Terminal Packing

Type	**2.3**	
Cav. No.	1	
	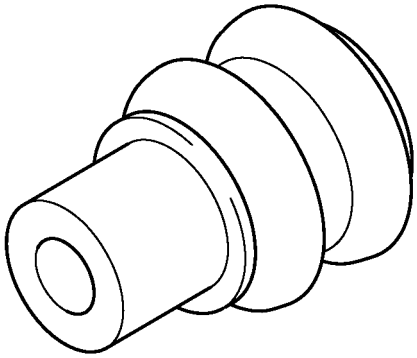	
P/N	90980–09148, 09151, 09149	
Type	**2.3II**	
Cav. No.	1	
	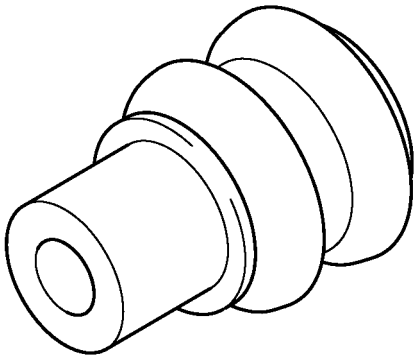	
P/N	90980–09451	
Type	**HB3, HB4**	
Cav. No.	1	
	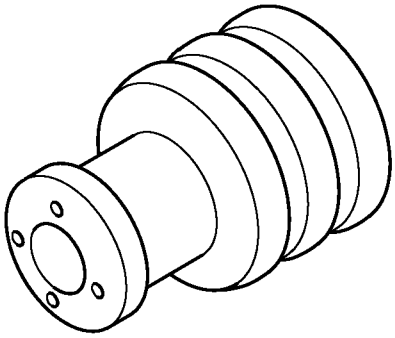	
P/N	90980–09396	

Hole Plug

Type	**6.3, 7.7, TODC**	**4.8**
		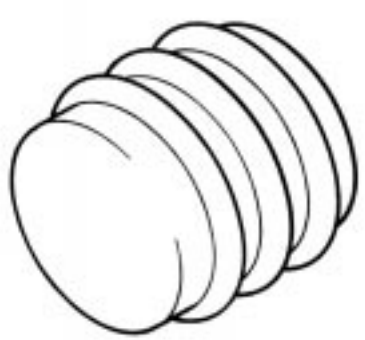
P/N	90950–01730	90980–09325
Type	**8.0**	**2.3, 2.3II**
	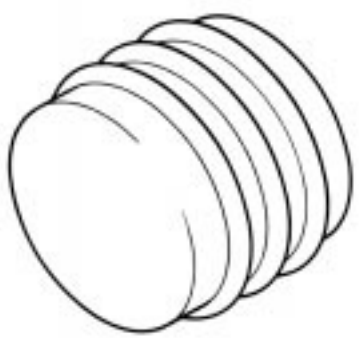	
P/N	90980–09353	90980–09152
Type	**TLC**	**1.3**
		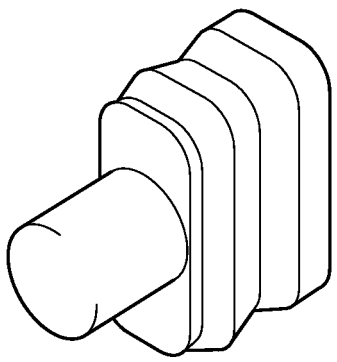
P/N	90980–09162	90980–09414

Press Sleeve

Color	YELLOW	BLUE
P/N	82999–12030	82999–12020
Color	RED	
P/N	82999–12010	

FOREWORD

This repair manual has been prepared to provide essential information on body panel repair methods (including cutting and welding operations, but excluding painting) for the LEXUS LX450.

Applicable models: FZJ80 series

This manual consists of body repair methods, exploded diagrams and illustrations of the body components and other information relating to body panel replacement such as handling precautions, etc. However, it should be noted that the front fenders of the LEXUS model is bolted on and require no welding.

When repairing, don't cut and join areas that are not shown in this manual. Only work on the specified contents to maintain body strength.

Body construction will sometimes differ depending on specifications and country of destination. Therefore, please keep in mind that the information contained herein is based on vehicles for general destinations.

For the repair procedures and specifications other than collision-damaged body components of the LEXUS LX450 refer to the following repair manuals.

Manual Name	Pub. No.
• LX450 Repair Manual	M/Y Version
• LX450 Electrical Wiring Diagram Manual	M/Y Version
• LX450 New Car Features	NCF
• Fundamental Painting Procedures	BRM019U
• Fundamental Body Repair Procedures	BRM020U

If you require the above manuals, please contact your LEXUS Dealer.

All information contained in this manual is the most up-to-date at the time of publication. However, specifications and procedures are subject to change without prior notice.

TOYOTA MOTOR CORPORATION

HOW TO USE THIS MANUAL

Each repair method description provided in Section RE of this manual comprises two pages, divided into 2 blocks (REMOVAL AND INSTALLATION) and includes illustrations to facilitate body repair.

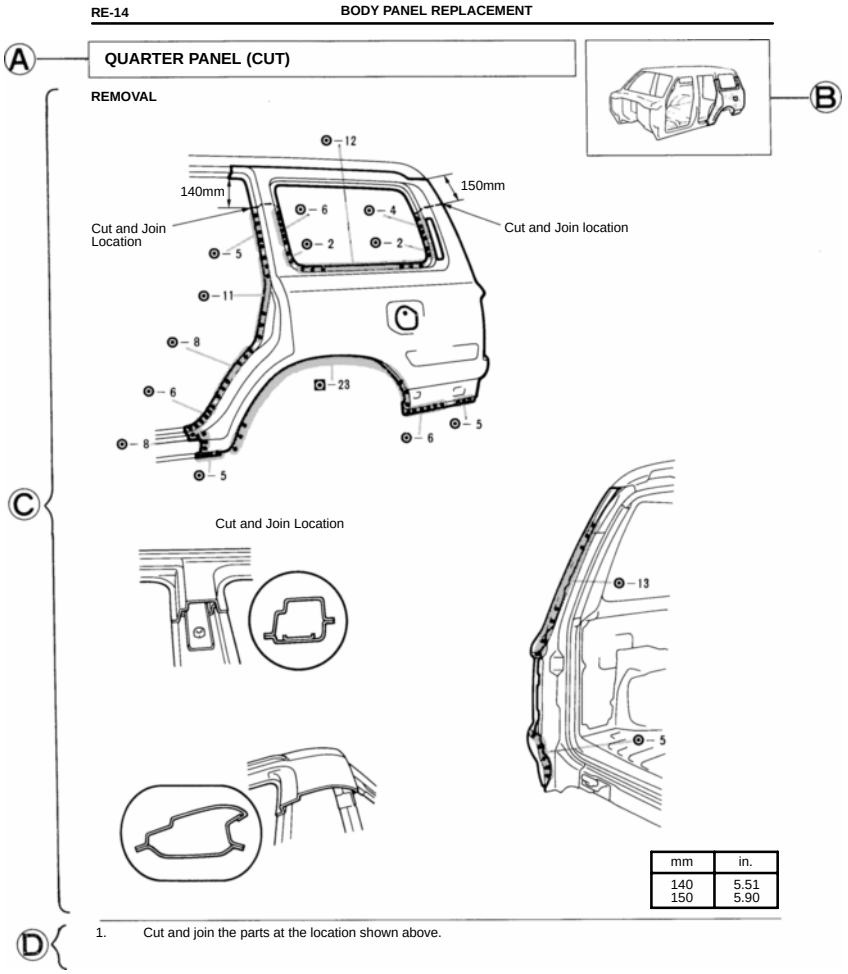

mm	in.
140	5.51
150	5.90

Ⓐ : **REPLACEMENT PARTS AND METHOD**

QUARTER PANEL (CUT)

- Replacement method
  - (ASSY) . . . . Assembly replacement
  - (CUT) . . . . . Major cutting (less than 1/2 of parts used)
  - (CUT-H) . . . Half cutting (about 1/2 of parts used)
  - (CUT-P) . . . Partial cutting (most of parts used)
- Replacement Parts

Ⓑ : **PARTS LOCATION**

Ⓒ : **REMOVAL DIAGRAM**
Describes in detail removal of the damaged parts involving repair by cutting.

Ⓓ : **REMOVAL GUIDE**
Provides additional information to more efficiently help you perform the removal.

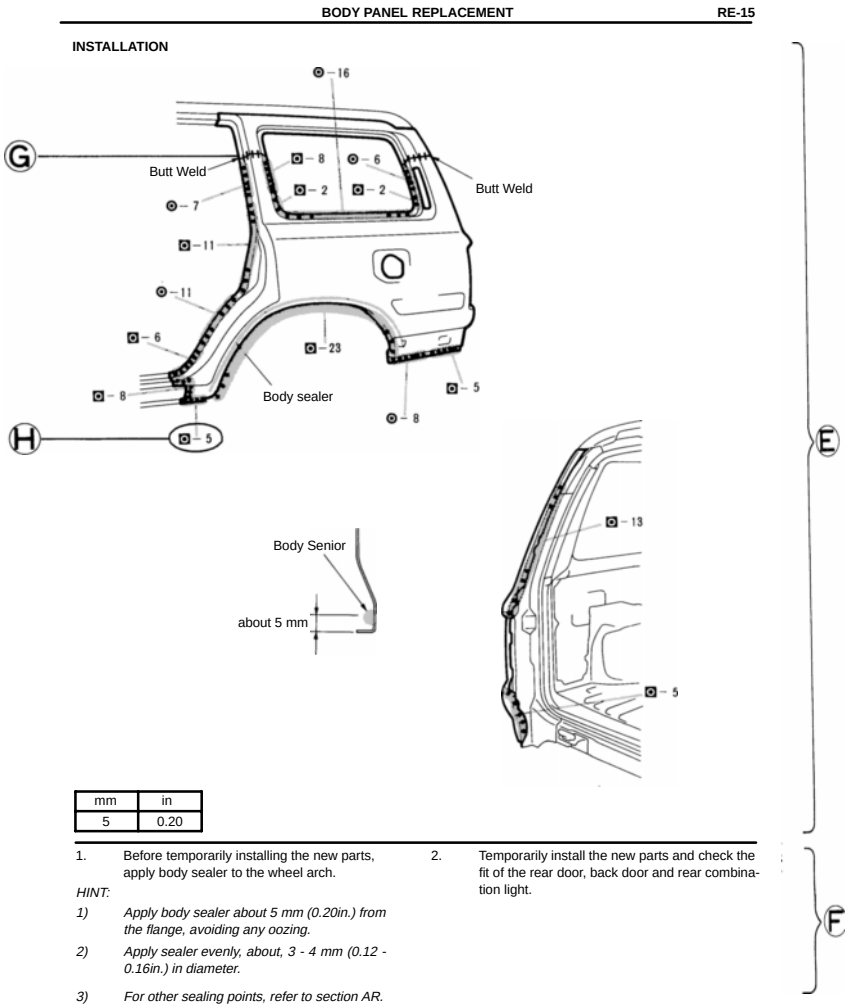

Ⓔ : **INSTALLATION DIAGRAM**
Describes in detail installation of the new parts involving repair by welding and/or cutting, but excluding painting.

Ⓕ : **INSTALLATION GUIDE**
Provides additional information to more efficiently help you perform the installation.

Ⓖ : **SYMBOLS**
See page IN-4 .

Ⓗ : **ILLUSTRATION OF WELD POINTS**
Weld method and panel position symbols.
See page IN-5 .

SYMBOLS

The following symbols are used in the Welding Diagrams in Section RE of this manual to indicate cutting areas and the types of weld required.

SYMBOLS	MEANING	ILLUSTRATION
	SAW CUT OR ROUGH CUT	
	REMOVE BRAZE	
	WELD POINTS SPOT WELD OR MIG PLUG WELD (See page IN-5)	
	CONTINUOUS MIG WELD (BUTT WELD OR TACK WELD)	
	BRAZE	
	BODY SEALER	

Illustration of Weld Point Symbols

EXAMPLE:

REMOVAL

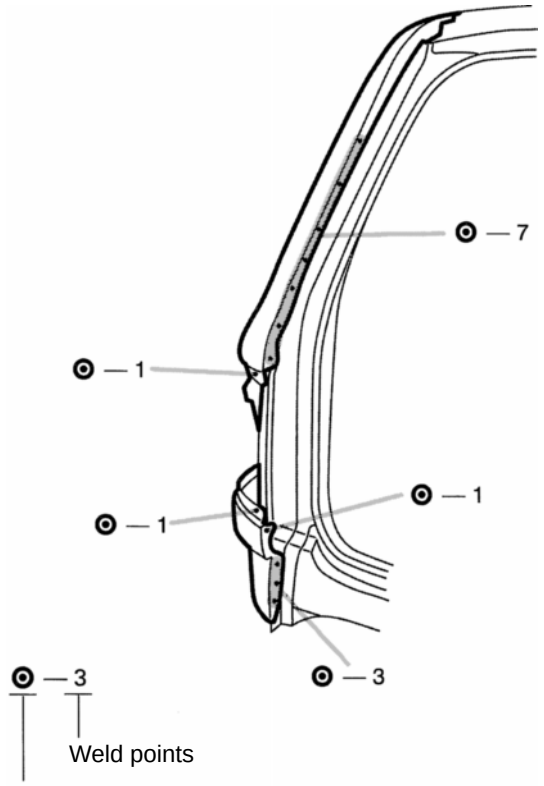

Remove weld point and panel position

INSTALLATION

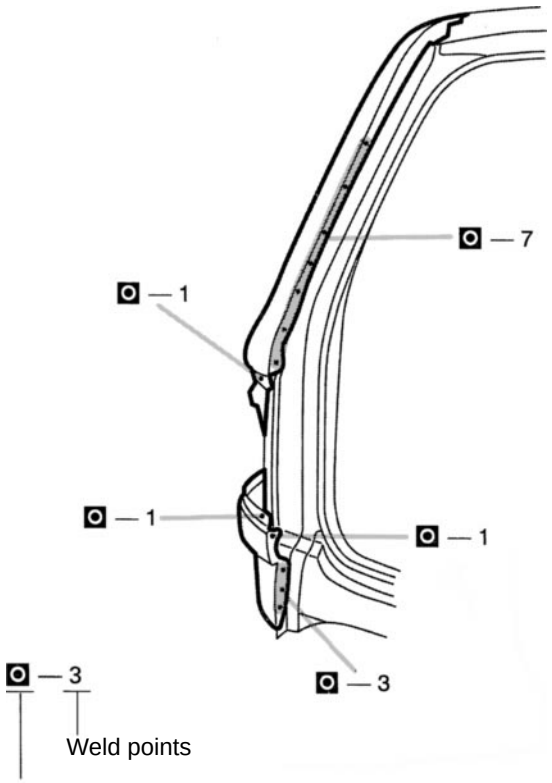

Weld method and panel position

SYMBOL	MEANING	ILLUSTRATION
O M I	Remove Weld Points	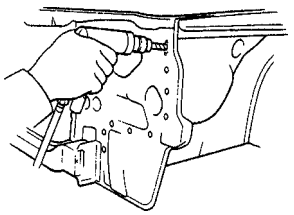
O	(Outside)	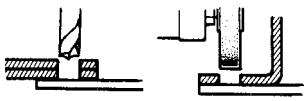
M	(Middle)	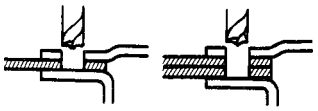
I	(Inside)	

HINT: Panel position syrnbols are as seen from the working posture.

SYMBOL	MEANING	ILLUSTRATION
O M I	Spot Weld	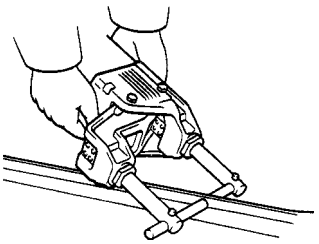
O M I	MIG Plug Weld	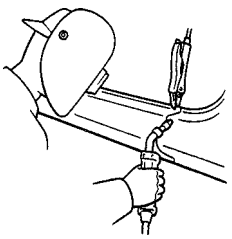
+	Spot MIG Weld	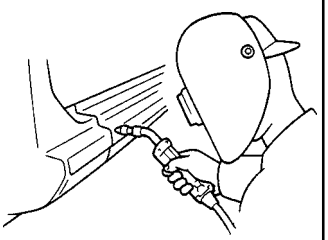

HANDLING PRECAUTIONS ON RELATED COMPONENTS

1. BRAKE SYSTEM

The brake system is one of the most important safety components. Always follow the directions and notes given in section BR of the repair manual for the relevant model year when handling brake system parts.
NOTICE: When repairing the brake master cylinder or TRAC system, bleed the air out of the TRAC system.

2. DRIVE TRAIN AND CHASSIS

The drive train and chassis are components that can have great effects on the running performance and vibration resistance of the vehicle. After installing components in the sections listed in the table below, perform alignments to ensure correct mounting angles and dimensions. Particularly accurate repair of the body must also be done to ensure correct alignment.
HINT: Correct procedures and special fools are required for alignment. Always follow the directions given in the repair manual for the relevant model year during alignment and section DI of this manual.

Component to be aligned	Section of repair manual for relevant model year
Front Wheels	Suspension and Axle (SA) section
Rear Wheels	Suspension and Axle (SA) section
Propeller Shaft	Propeller Shaft (PR) section

3. ECU (ELECTRONIC CONTROL UNIT)

Locations of ECUs

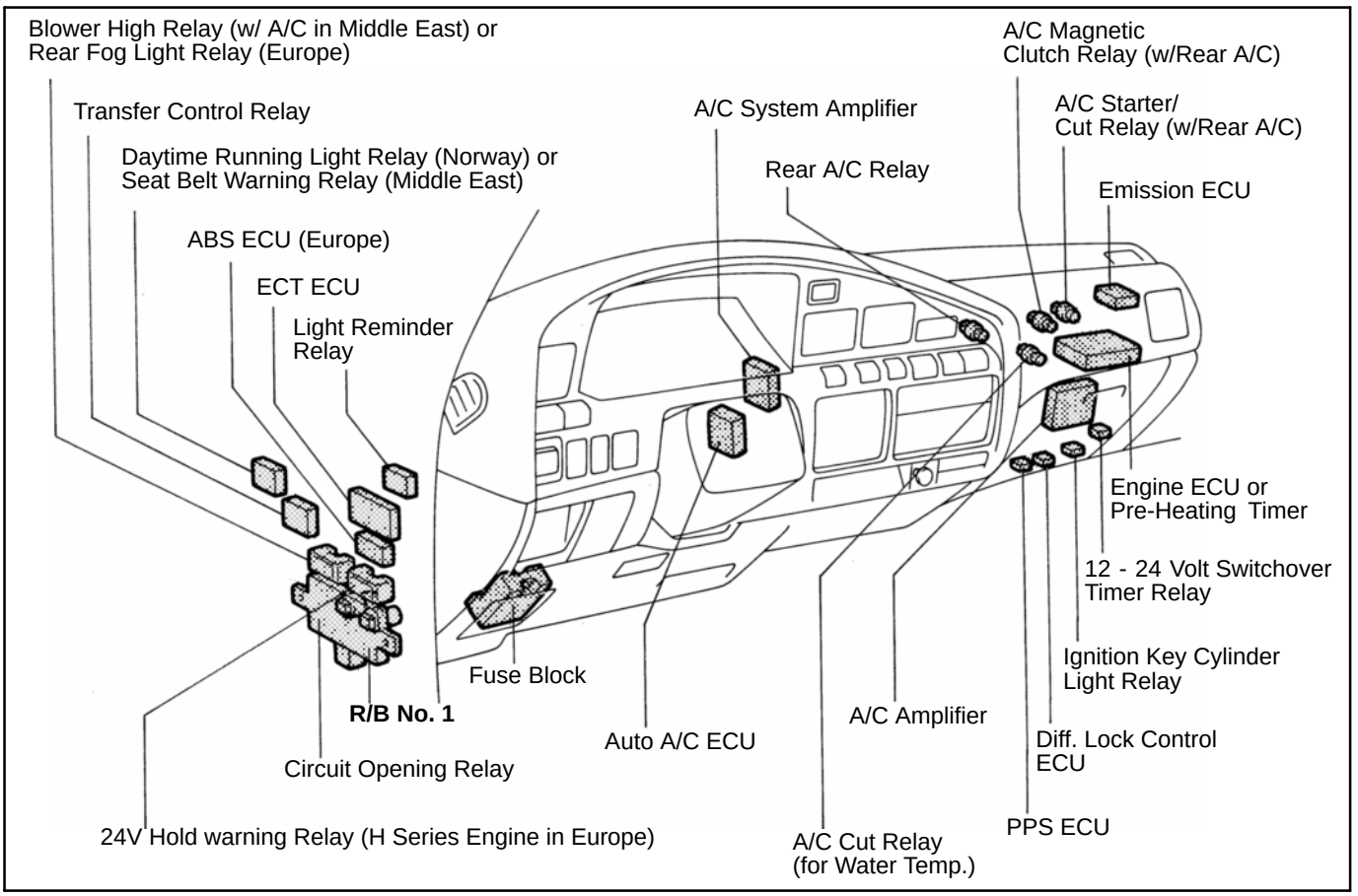

Locations of ECUs (Cont'd)

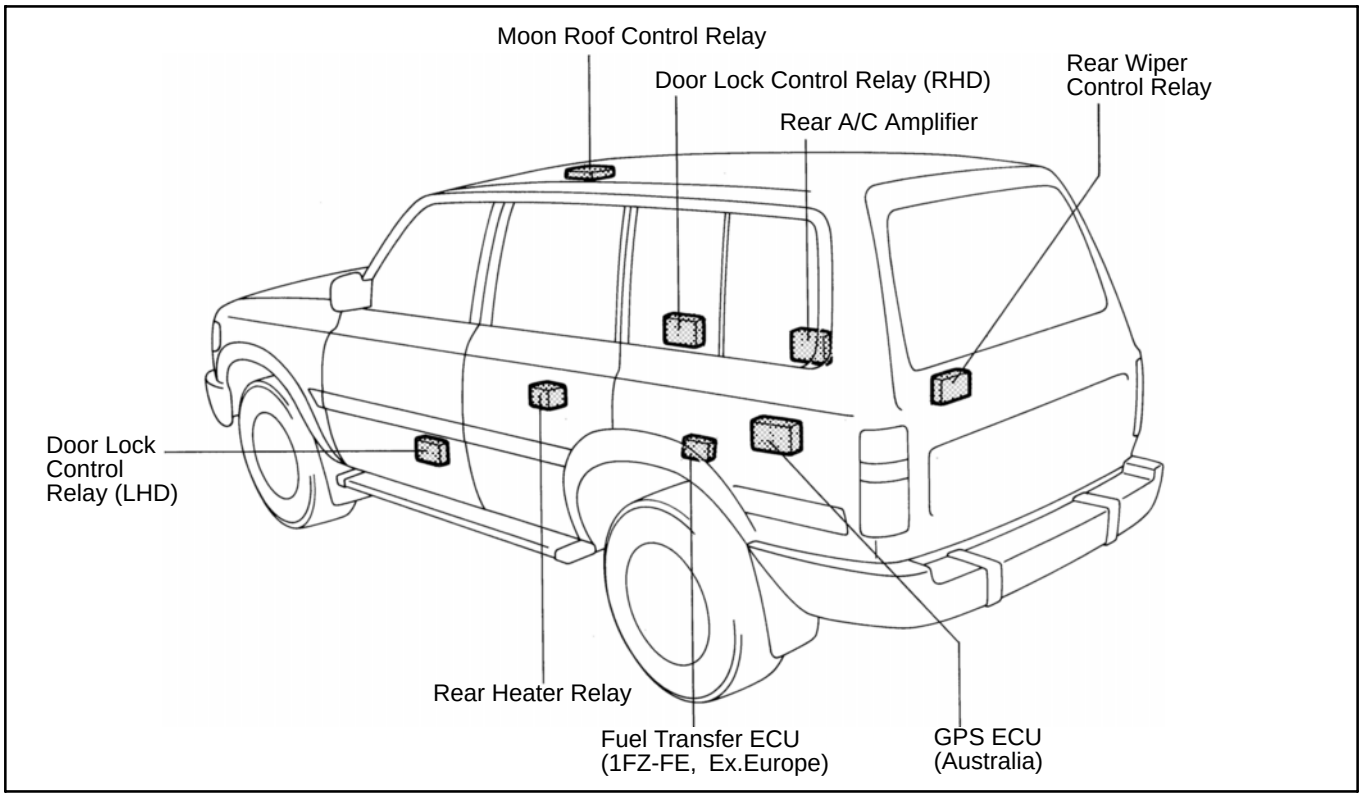

Many ECUs are mounted in this vehicle.
Take the following precautions during body repair to prevent damage to the ECUs.

- Before starting electric welding operations, disconnect the negative (-) terminal cable from the battery. When the negative (-) terminal cable is disconnected from the battery, memory of the clock and audio systems will be cancelled. So before starting work, make a record of the contents memorized by each memory system. Then when work is finished, reset the clock and audio systems as before. When the vehicle has tilt and telescopic steering, power seat and outside rear view mirror, which are all equipped with memory function, it is not possible to make a record of the memory contents. So when the operation is finished, it will be necessary to explain this fact to the customer, and request the customer to adjust the features and reset the memory.
- Do not expose the ECUs to ambient temperatures above 80˚C (176˚F).

  NOTICE: If it is possible the ambient temperature may reach 80˚C (176˚F) or more, remove the ECUs from the vehicle before starting work.
- Be careful not to drop the ECUs and not to apply physical shocks to them.

4. COMPONENTS ADJACENT TO THE BODY PANELS

Various types of component parts are mounted directly on or adjacently to the body panels.
Strictly observe the following precautions to prevent damaging these components and the body panels during handling.

- Before repairing the body panels, remove their components or apply protective covers over the components.
- Before prying components off using screwdriver or a scraper, etc, attach protective tape to the tool tip or blade to prevent damaging the components and the body paint.
- Before removing components from the outer surface of the body, attach protective tape to the body to ensure no damage to painted areas.

  HINT: Apply touch-up paint to any damaged paint surfaces.
- Before drilling or cutting sections, make sure that there are no wires, etc. on the reverse side.

GENERAL REPAIR INSTRUCTIONS

Work Precautions

SAFETY
Never stand in direct line with the chain when using a puller on the body or frame, and be sure to attach a safety cable.

VEHICLE PROTECTION
When welding, protect the painted surfaces, windows, seats and carpet with heat-resistant, fire-proof covers.

SAFETY

1. Before performing repair work, check for fuel leaks. If a leak is found, be sure to close the opening totally.
2. If it is necessary to use a frame in the area of the fuel tank, first remove the tank and plug the fuel line.

WRONG

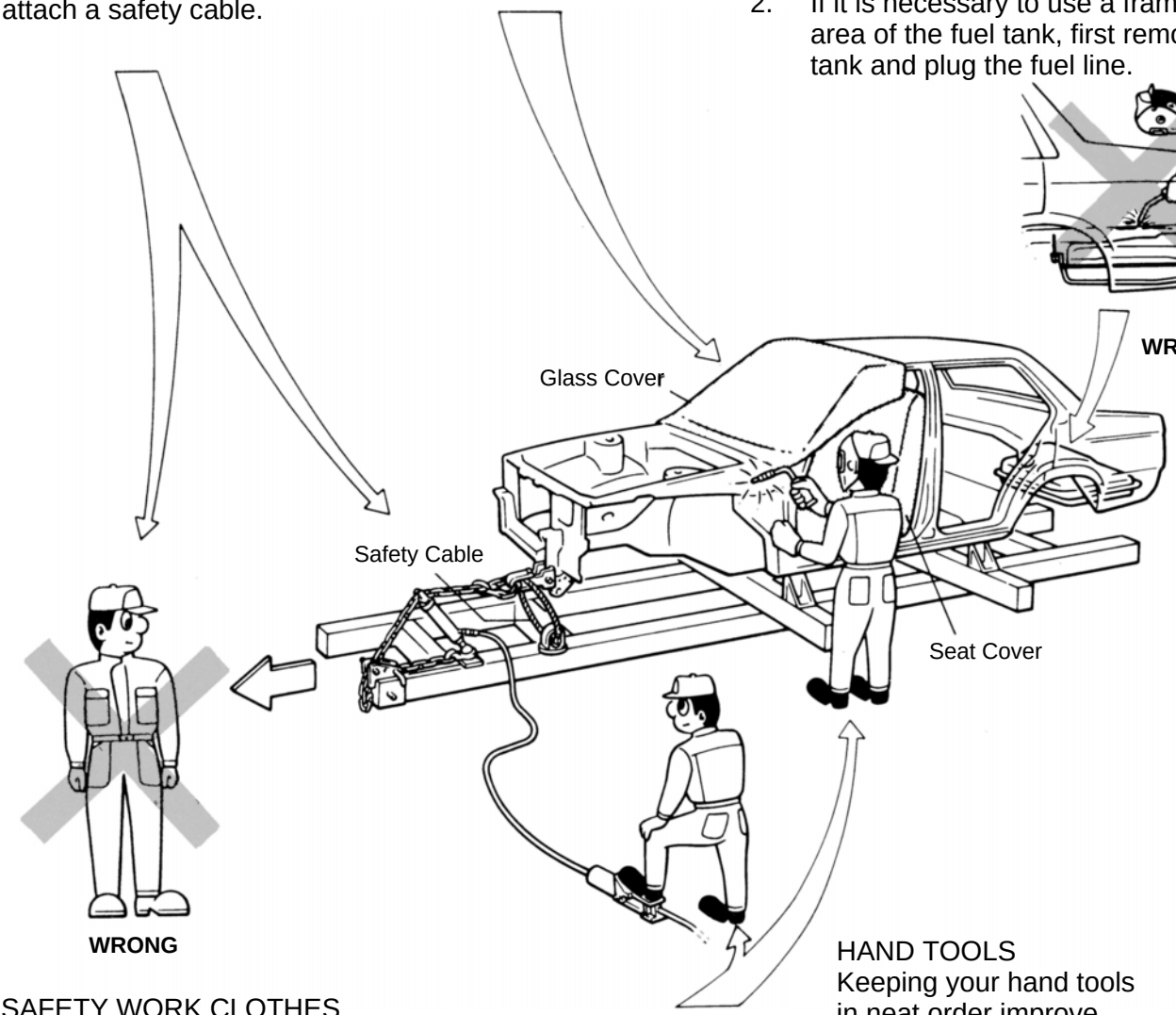

HAND TOOLS
Keeping your hand tools in neat order improve your work efficiency.

SAFETY WORK CLOTHES
In addition to the usual mechanic's wear, cap and safety shoes, the appropriate gloves, head protector, glasses, ear plugs, face protector, dust-prevention mask, etc. should be worn as the situation demands.

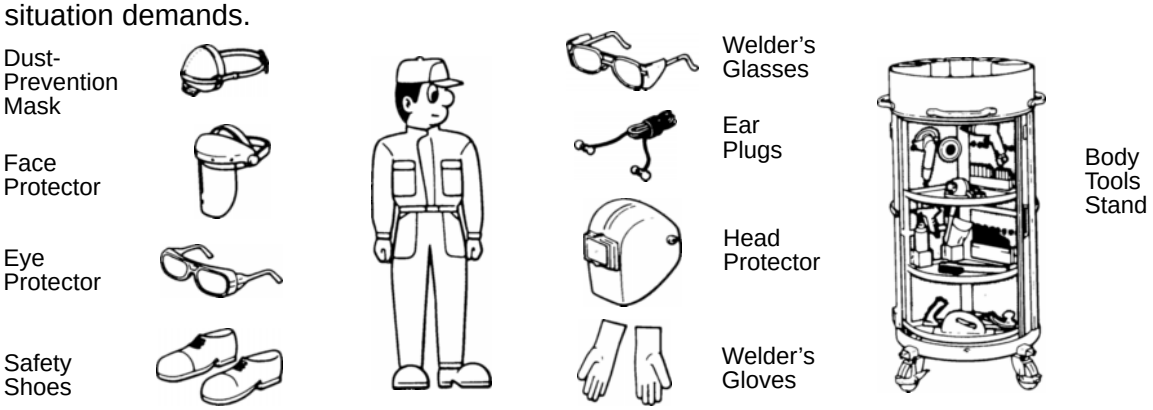

Proper and Efficient Work Procedures

REMOVAL

PRE-REMOVAL MEASURING
Before removal or cutting operations, take measurements in accordance with the dimension diagram. Always use a puller to straighten a damaged body or frame.

NUMBER OF SPOT WELDS AND PANEL POSITIONS
The number of spot welds and the panel positions to be removed are shown for your reference.
HINT: See "Symbols" on page IN-4 , 5.

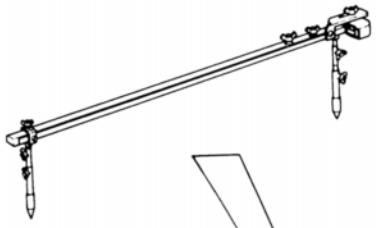

REMOVAL OF ADJACENT COMPONENTS
When removing adjacent components, apply protective tape to the surrounding body and your tools to prevent damage.
HINT: See "Handling Precautions on Related Components" on page IN-6 .

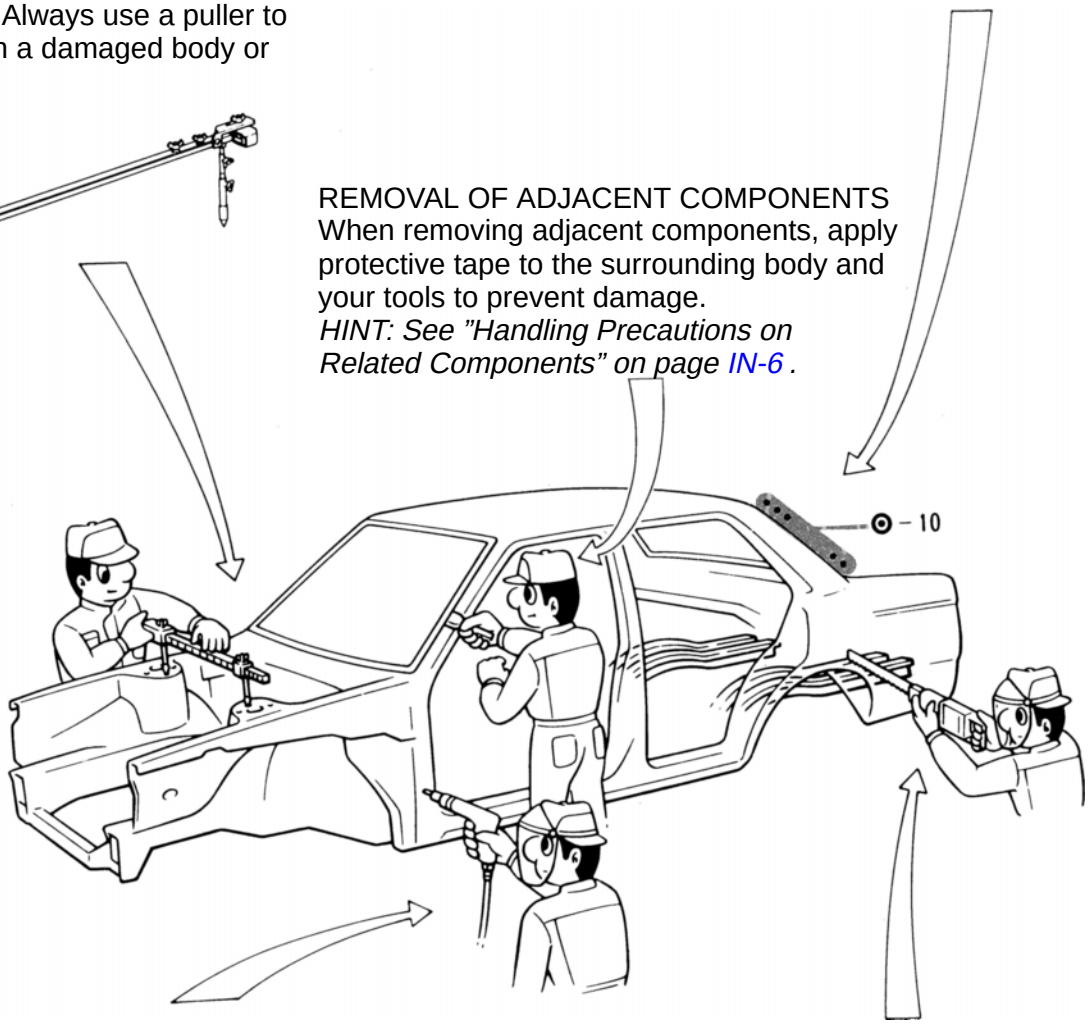

PRECAUTIONS FOR DRILLING OR CUTTING
Check behind any area to be drilled or cut to insure that there are no hoses, wires, etc., that may be damaged.
HINT: See "Handling Precautions on Related Components" on page IN-6 .

CUTTING AREA
Always cut in a straight line and avoid reinforced area.

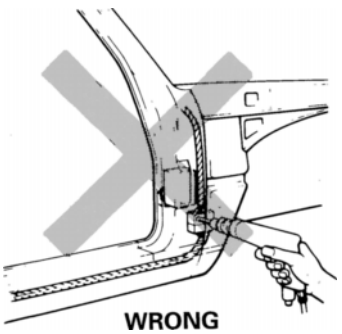

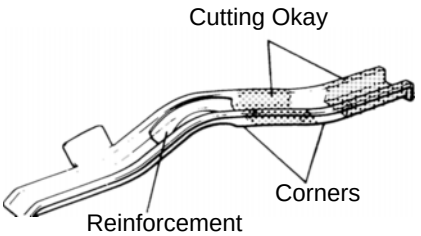

PREPARATION FOR INSTALLATION

SPOT WELD POINTS

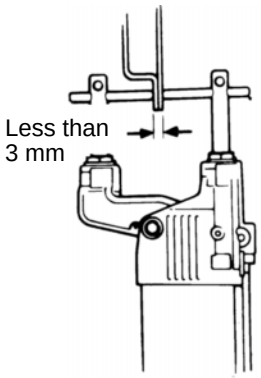

When welding panels with a combined thickness of over 3 mm (0.12in.), use a MIG (Metal Inert Gas) welder for plug welding.
HINT: Spot welding will not provide sufficient durability for panels over 3 mm (0.12in.) thick.

APPLICATION OF WELD-THROUGH PRIMER (SPOT SEALER)

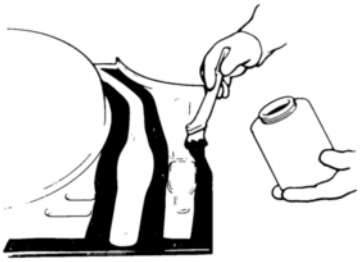

Remove the paint from the portion of the new parts and body to be welded, and apply weld-through primer.
HINT: See "ANTI-RUST TREATMENT" on page AR-2 .

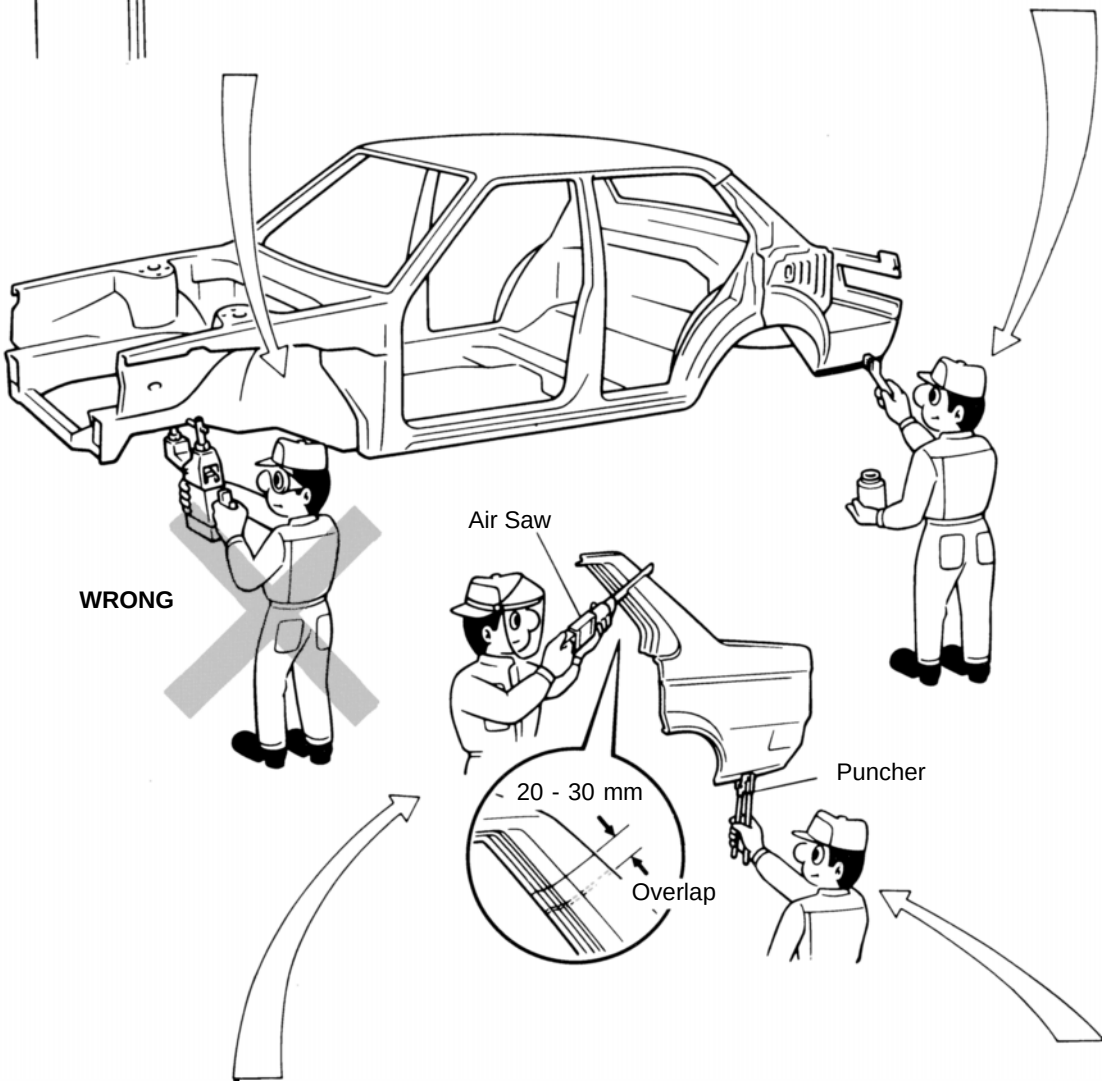

ROUGH CUTTING OF JOINTS
For joint areas, rough cut the new parts, leaving 20 - 30 mm (0.79 - 1.18in.) overlap.

MAKING HOLES FOR PLUG WELDING
For areas where a spot welder cannot be used, use a puncher or drill to make holes for plug welding.

REFERENCE: mm (in.)

Thickness of welded portion	Size of plug hole
1.0 (0.04) under	5 (0.20) ϕ over
1.0 (0.04) - 1.5 (0.06)	6.5 (0.26) ϕ over
1.5 (0.06) over	8 (0.31) ϕ over

INSTALLATION

PRE-WELDING MEASUREMENTS
Always take measurements before installing underbody or engine components to insure correct assembly. After installation, confirm proper fit.

WELDING PRECAUTIONS

1. The number of welding spots should be as follows.
   Spot weld: 1.3 x No. of manufacturer's spots.
   Plug weld: More than No. of manufacturer's plugs.

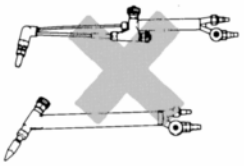

WRONG

2. Plug welding should be done with a MIG (Metal Inert Gas) welder. Do not gas weld or braze panels at areas other than specified.

POST WELDING REFINISHING

1. Always check the welded spots to insure they are secure.
2. When smoothing out the weld spots with a disc grinder, he careful not to grind off too much as this would weaken the weld.

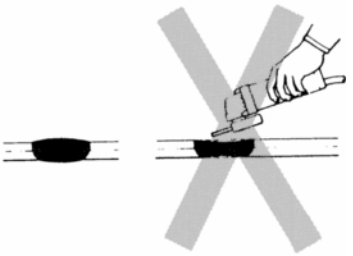

OKAY WRONG

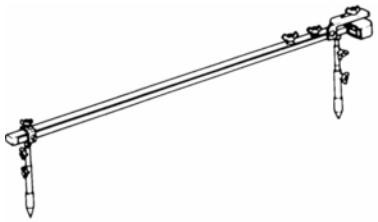

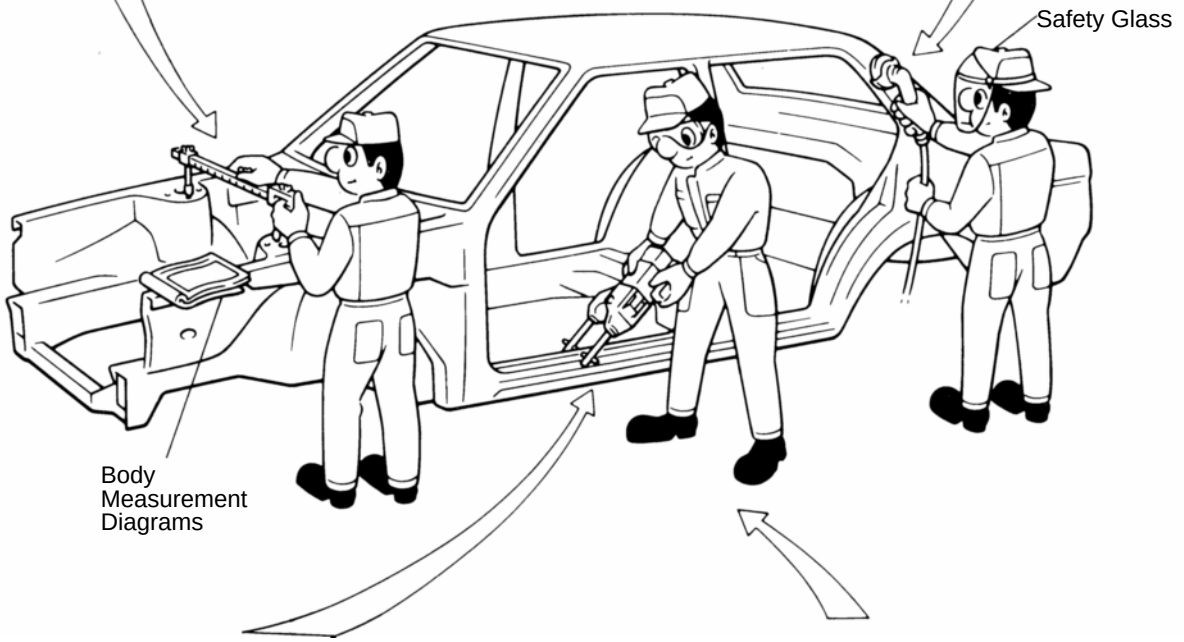

SPOT WELD LOCATIONS
Try to avoid welding over previous spots.

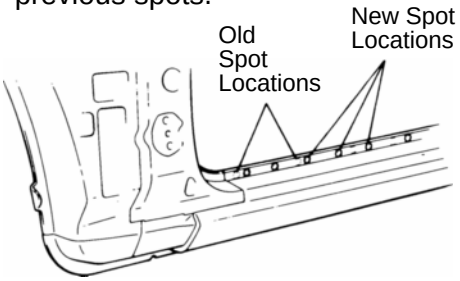

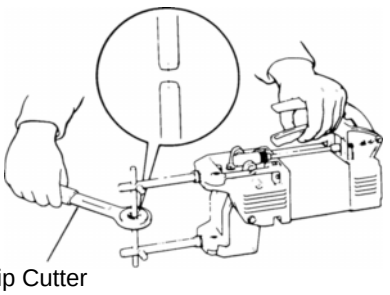

SPOT WELDING PRECAUTIONS

1. The shape of the welding tip point has an effect on the strength of the weld.
2. Always insure that the seams and welding tip are free of paint.

ANTI-RUST TREATMENT

When replacing body panels, always apply body sealer, anti-rust agent or undercoat according to the requirements of your country.
HINT: For further details, see the description given in Section AR of this manual.

BODY SEALER
Apply body sealer to the required areas.

ANTI-RUST AGENT (WAX)
Apply anti-rust agent to following sections.

- Inside of the hems of the doors and hood.
- Around the hinges of the doors and hood.
- Inside of the welded parts with boxed cross-section.

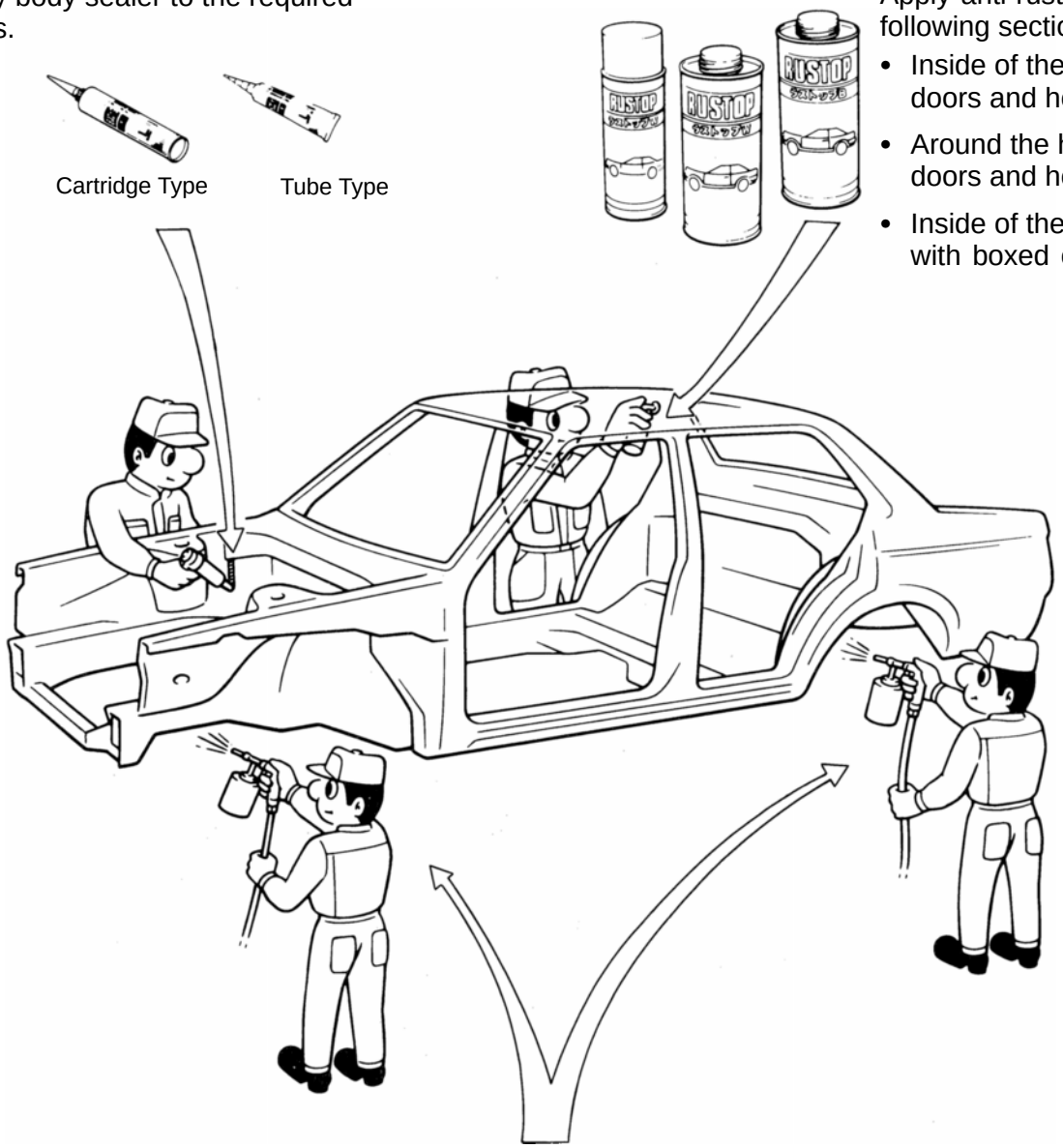

UNDERCOAT
Apply undercoat to the underbody and wheel housings.

Undercoating (Oil base)

Undercoating (Water base)

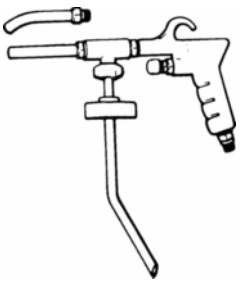

Spray Gun

VEHICLE LIFT AND SUPPORT LOCATIONS

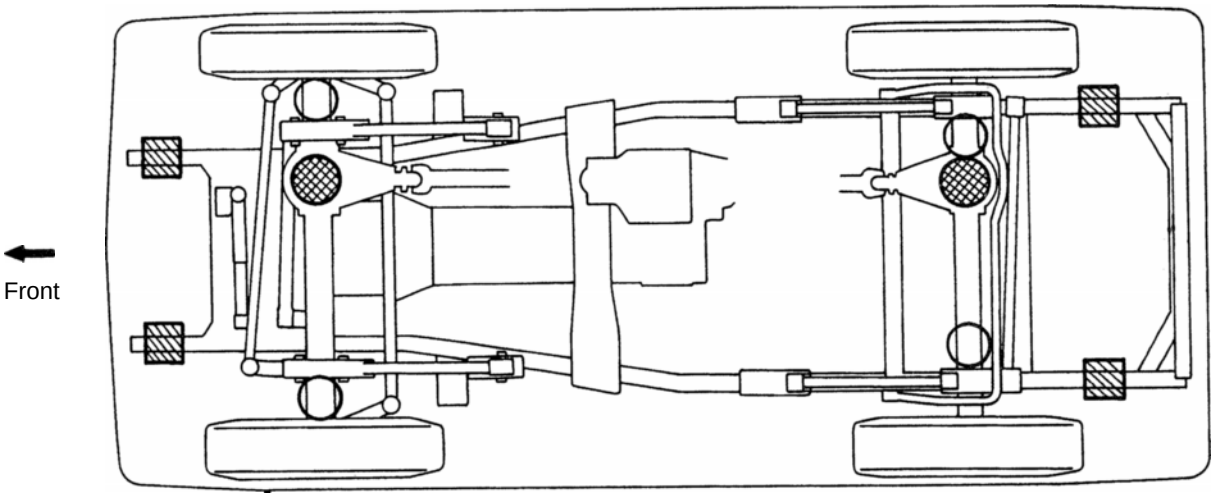

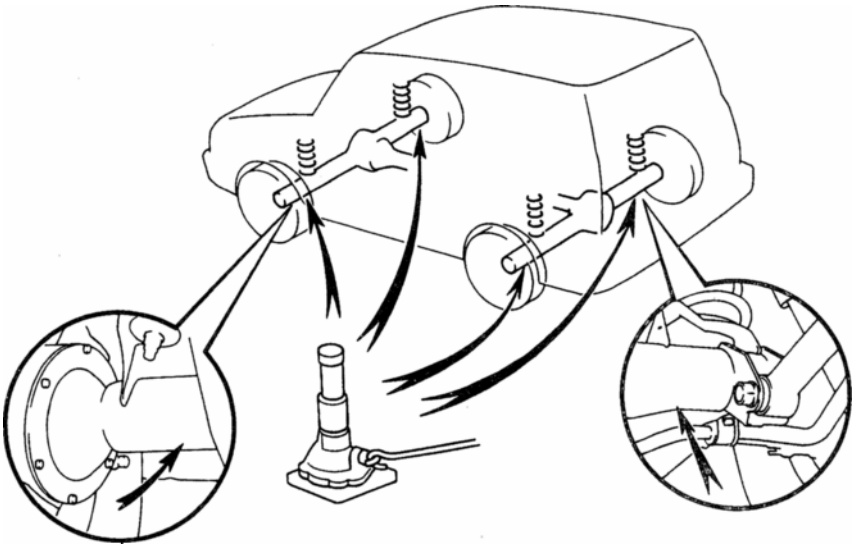

JACK POSITION

Front . . . . . Under the front differential
Rear . . . . . Under the rear differential

SCREW TYPE JACK POSITION

SUPPORT POSITION

Safety stand . . . . . .

ABBREVIATIONS USED IN THIS MANUAL

For convenience, the following abbreviations are used in this manual.

ABS	Antilock Brake System
A/C	Air Conditioner
assy	assembly
ECT	Electronic Controlled Transmission
ECU	Electronic Control Unit
e.g.	Exempli Gratia (for Example)
Ex.	Except
FWD	Front Wheel Drive Vehicles
4WD	Four Wheel Drive Vehicles
in.	inch
LH	Left-hand
LHD	Left-hand Drive
MIG	Metal Inert Gas
M/Y	Model Year
PPS	Progressive Power Steering
RH	Right-hand
RHD	Right-hand Drive
SRS	Supplemental Restraint System
w/	with
w/o	without

STANDARD BODY MARKS

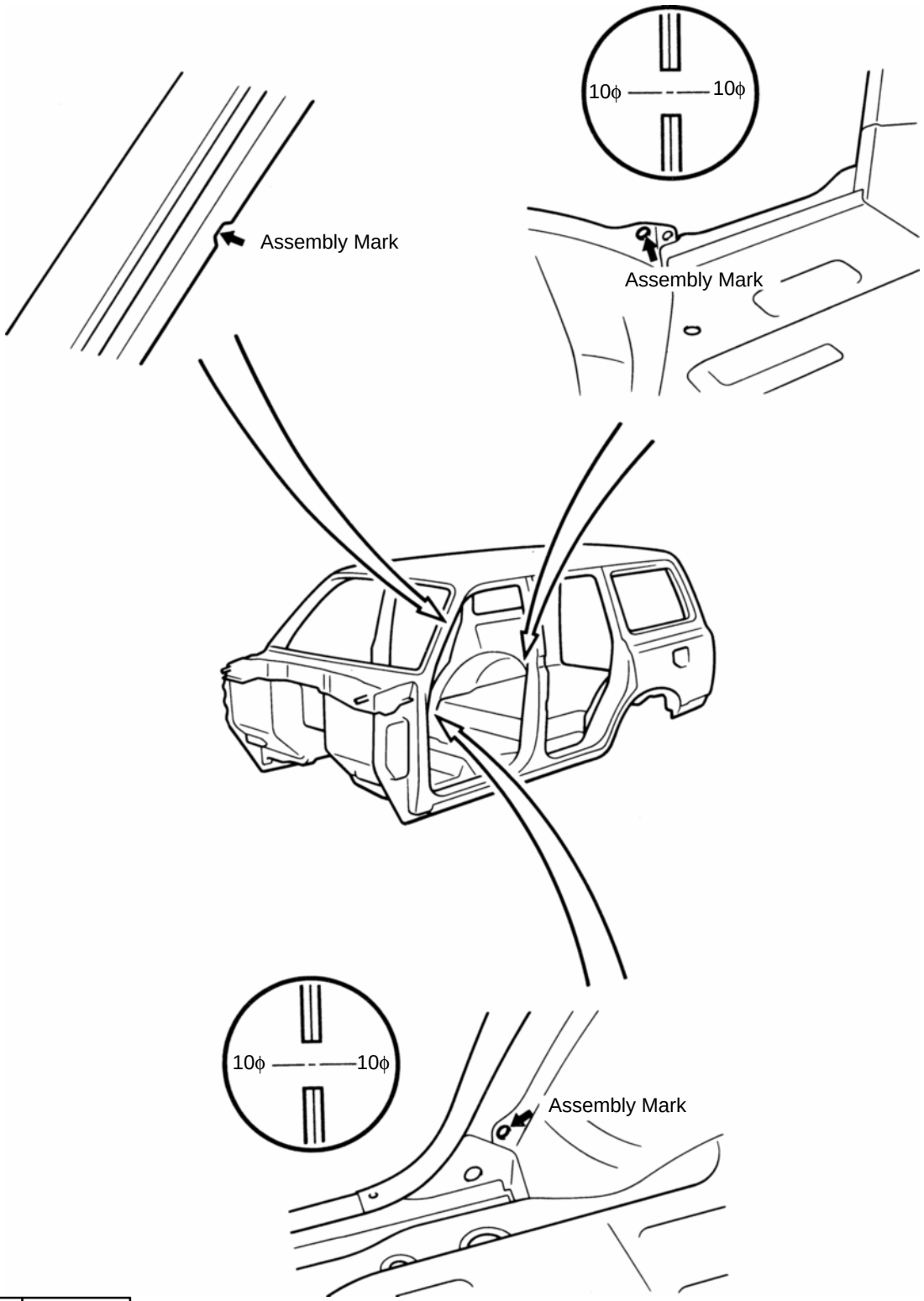

mm	in.
10	0.39

HIGH-STRENGTH STEEL (HSS) PARTS

Generally, High-Strength Steel (HSS) is that which has an intensity value of at 35 kgf/mm^2 (343 MPa), and distinguished from mild steel.

The handling of HSS is the same as for mild steel, but the following should be observed.

1. Panel Hammering: Because HSS is thinner than mild steel, care should be taken to avoid warping during hammering operations.
2. Removing Spot Welds: Because HSS is tougher than mild steel, damage will occur more easily to a regular drill. Therefore, an HSS Spot Cutter is recommended.
   Also, use a high-torque drill at low speed, and supply grinding oil to the drill during use.
3. Panel Welding: Panel welding procedures for HSS are exactly the same as for mild steel. Plug welding should be done with MIG (Metal Inert Gas) welder. Do not gas weld or braze panels at areas other than specified.

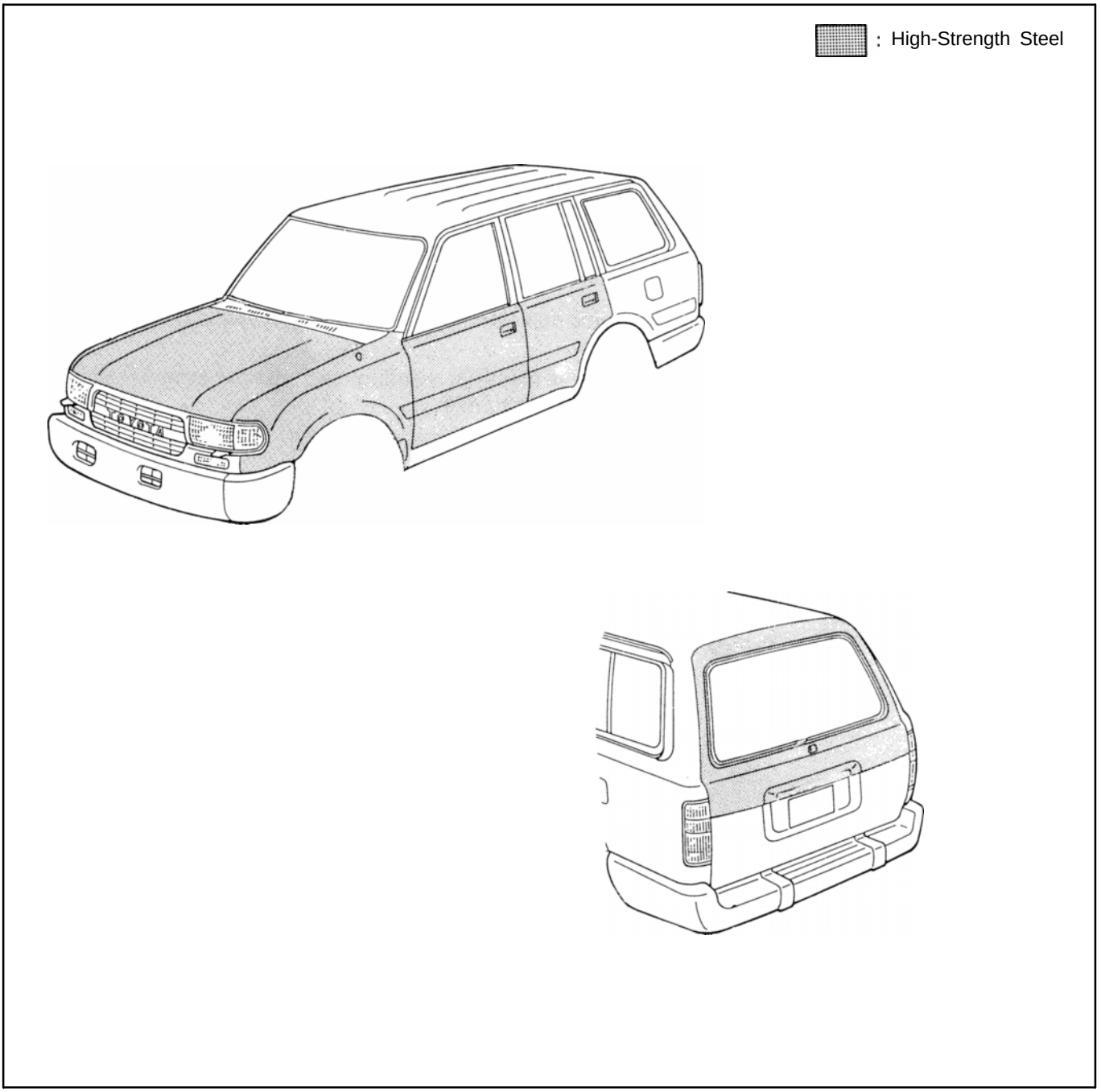

RUST-RESIST ANT SHEET STEEL PARTS

Rust-Resistant Sheet Steel have zinc, tin or aluminum etc. plating over the base metal surface in order to improve the corrosion resistance of the sheet metal. For the vehicle's body panels, galvannealed sheet steel is widely used.
Body panel on LEXUS models are made of two different galvannealed sheet steel. The ordinary galvannealed sheet steel has a zinc-iron alloy plating over the base metal surface. Zinc-iron alloy double-layer galvannealed sheet steel has zinc-iron alloy plating on both the outside and the back surface, plus a further iron-rich zinc-iron alloy plating which has good paint adhesion. These two galvannealed sheet steels are used selectively according to need.

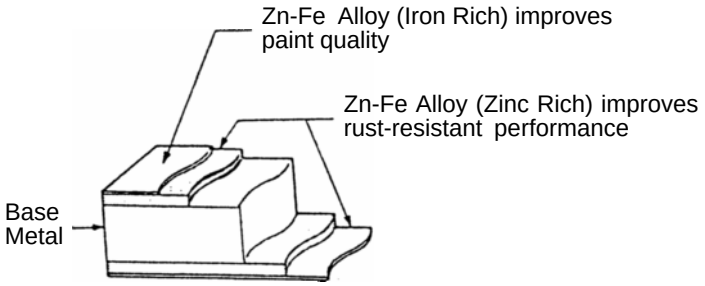

Excelite II

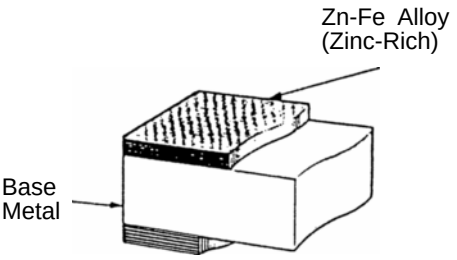

Galvannealed Sheet Steel

The handling of Rust-Resistant Sheet Steel is the same as for ordinary sheet steel, but the following should be observed.

1. Panel Welding: The paint as well as the zinc portion must be removed completely from the welding area to guarantee good welding integrity.
2. Anti-Rust Treatment: Since the zinc plating is lost after welding, anti-rust treatment of the welded area must be thoroughly performed (refer to section AR).

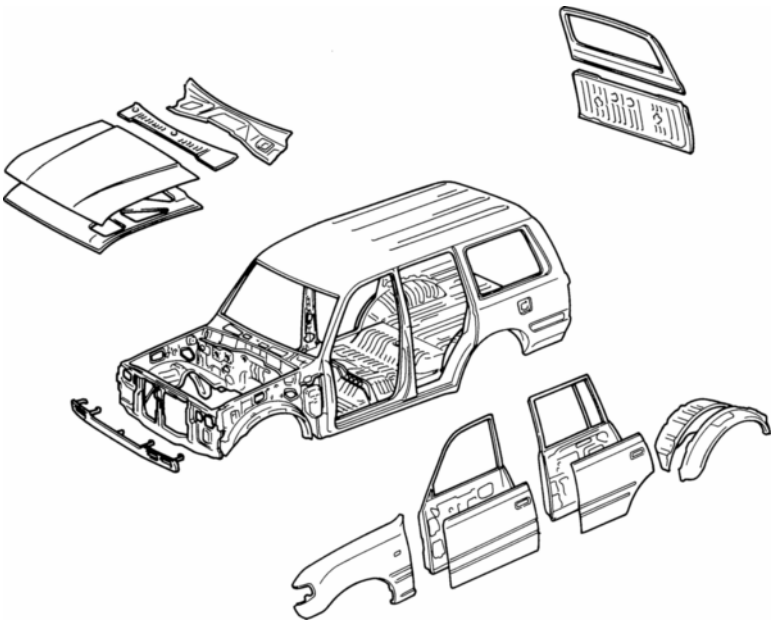

: Zinc-Iron Alloy Double-Layer Galvannealed Steel Sheets
: Galvannealed Steel Sheets

HANDLING PRECAUTIONS

1. The repair procedure for plastic body parts must conform with the type of plastic material.
2. Plastic body parts are identified by the codes in the following chart.
3. When repairing metal body parts adjoining plastic body parts (by brazing, frame cutting, welding, painting etc.), consideration must given to the property of the plastic.

Code	Material name	Heat* resistant temperature limit ˚C (˚F)	Resistance to alcohol or gasoline	Notes
AAS	Acrylonitrile Acrylic Styrene	80 (176)	Alcohol is harmless if applied only for short time in small amounts (e.g., quick wiping to remove grease).	Avoid gasoline and organic or aromatic solvents.
ABS	Acrylonitrile Butadiene Styrene	80 (176)	Alcohol is harmless if applied only for short time in small amounts (e.g., quick wiping to remove grease.)	Avoid gasoline and organic or aromatic solvents.
AES	Acrylonitrile Ethylene Styrene	80 (176)	Alcohol is harmless if applied only for short time in small amounts (e.g., quick wiping to remove grease).	Avoid gasoline and organic or aromatic solvents.
BMC	Bulk Moulding Compound	150 (302)	Alcohol and gasoline are harmless.	Most solvents are harmless.
CAB	Cellulose Acetate	80 (176)	Alcohol is harmless if applied only for short time in small amounts (e.g., quick wiping to remove grease.)	Avoid gasoline and organic or aromatic solvents.
EPDM	Ethylene Propylene	100 (212)	Alcohol is harmless. Gasoline is harmless if applied only for short time in small amounts.	Most solvents are harmless but avoid dipping in gasoline, solvents, etc.
PA	Polyamide (Nylon)	80 (176)	Alcohol and gasoline are harmless.	Avoid battery acid.
PBT	Polybutylene Terephthalate	160 (320)	Alcohol and gasoline are harmless.	Most solvents are harmless.
PC	Polycarbonate	120 (248)	Alcohol is harmless.	Avoid gasoline brake fluid, wax, wax removers and organic solvents. Avoid alkali.
PE	Polyethylene	80 (176)	Alcohol and gasoline are harmless.	Most solvents are harmless.
PET	Polyethylene Terephthalate	75 (167)	Alcohol and gasoline are harmless.	Avoid dipping in water.

*Temperatures higher than those listed here may result in material deformation during repair.

Code	Material name	Heat* resistant temperature limit ˚C (˚F)	Resistance to alcohol or gasoline	Notes
PMMA	Polymethyl Methacrylate	80 (176)	Alcohol is harmless if applied only for short time in small amounts.	Avoid dipping or immersing in alcohol, gasoline, solvents, etc.
POM	Polyoxymethylene (Polyacetal)	100 (212)	Alcohol and gasoline are harmless.	Most solvents are harmless.
PP	Polypropylene	80 (176)	Alcohol and gasoline are harmless.	Most solvents are harmless.
PPO	Modified Polyphenylene Oxide	100 (212)	Alcohol is harmless.	Gasoline is harmless if applied only for quick wiping to remove grease.
PS	Polystyrene	60 (140)	Alcohol and gasoline are harmless if applied only for short time in small amounts.	Avoid dipping or immersing in alcohol, gasoline, solvents, etc.
PUR	Polyurethane	80 (176)	Alcohol is harmless if applied only for very short time in small amounts (e.g., quick wiping to remove grease.)	Avoid dipping or immersing in alcohol, gasoline, solvents, etc.
PVC	Polyvinylchloride (Vinyl)	80 (176)	Alcohol and gasoline are harmless if applied only for short time in small amounts (e.g., quick wiping to remove grease).	Avoid dipping or immersing in alcohol, gasoline, solvents, etc.
SAN	Styrene Acrylonitrile	80 (176)	Alcohol is harmless if applied only for short time in small amounts (e.g., quick wiping to remove grease).	Avoid dipping or immersing in alcohol, gasoline, solvents etc.
SMC	Sheet Moulding Compound	180 (356)	Alcohol and gasoline are harmless.	Avoid alkali.
TPO	Thermoplastic Olefine	80 (176)	Alcohol is harmless. Gasoline is harmless if applied only for short time in small amounts.	Most solvents are harmless but avoid dipping in gasoline, solvents, etc.
TPU	Thermoplastic Polyurethane	80 (176)	Alcohol is harmless if applied only for very short time in small amounts (e.g., quick wiping to remove grease).	Avoid dipping or immersing in alcohol, gasoline, solvents, etc.
TSOP	TOYOTA Super Olefine Polymer	80 (176)	Alcohol and gasoline are harmless.	Most solvents are harmless.
UP	Unsaturated Polyester	110 (233)	Alcohol and gasoline are harmless.	Avoid alkali.

*Temperatures higher than those listed here may result in material deformation during repair.

LOCATION OF PLASTIC BODY PARTS

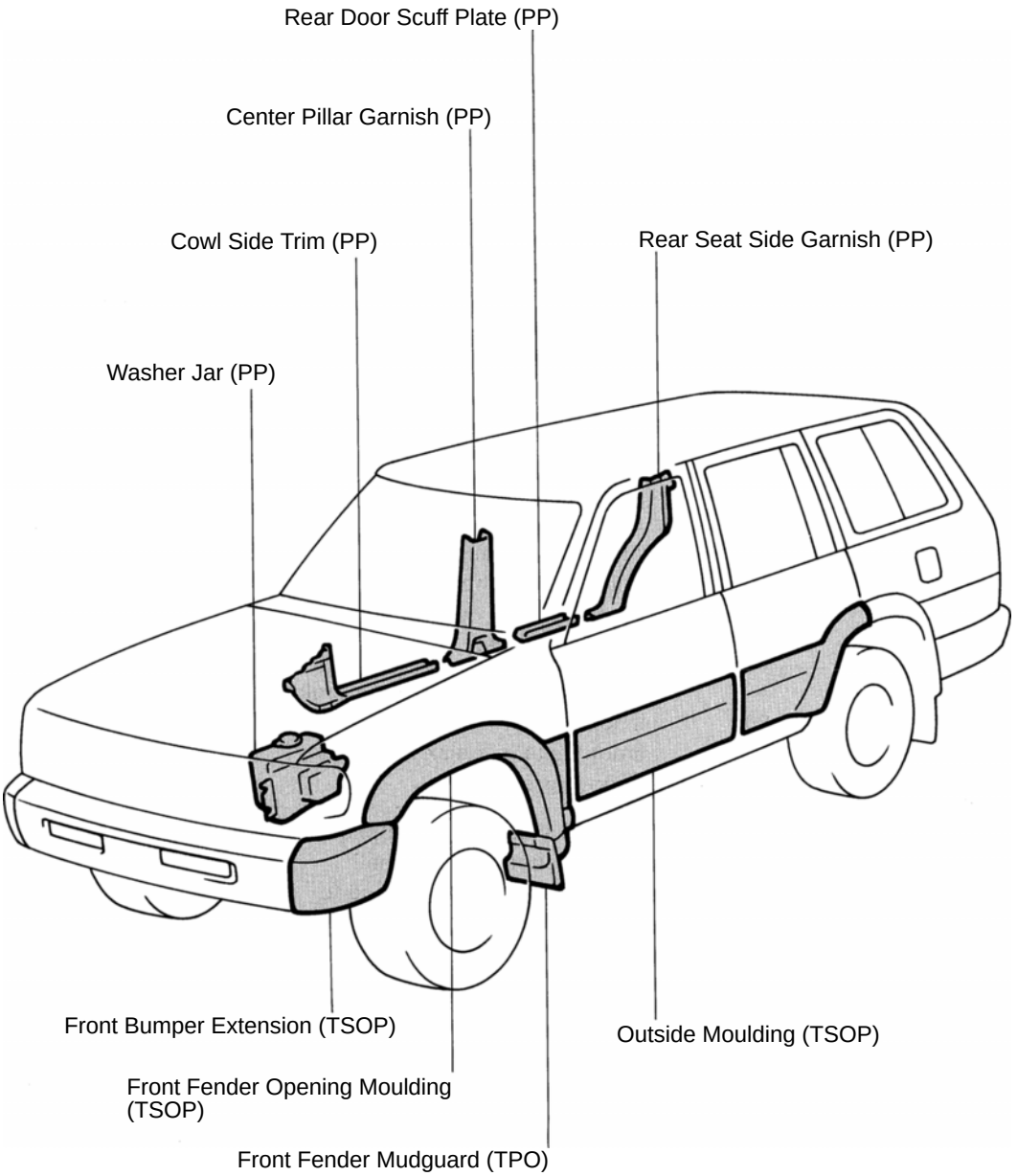

HINT:
- *Resin material differs with model.*

/ *Made up of 2 or more kinds of materials.*

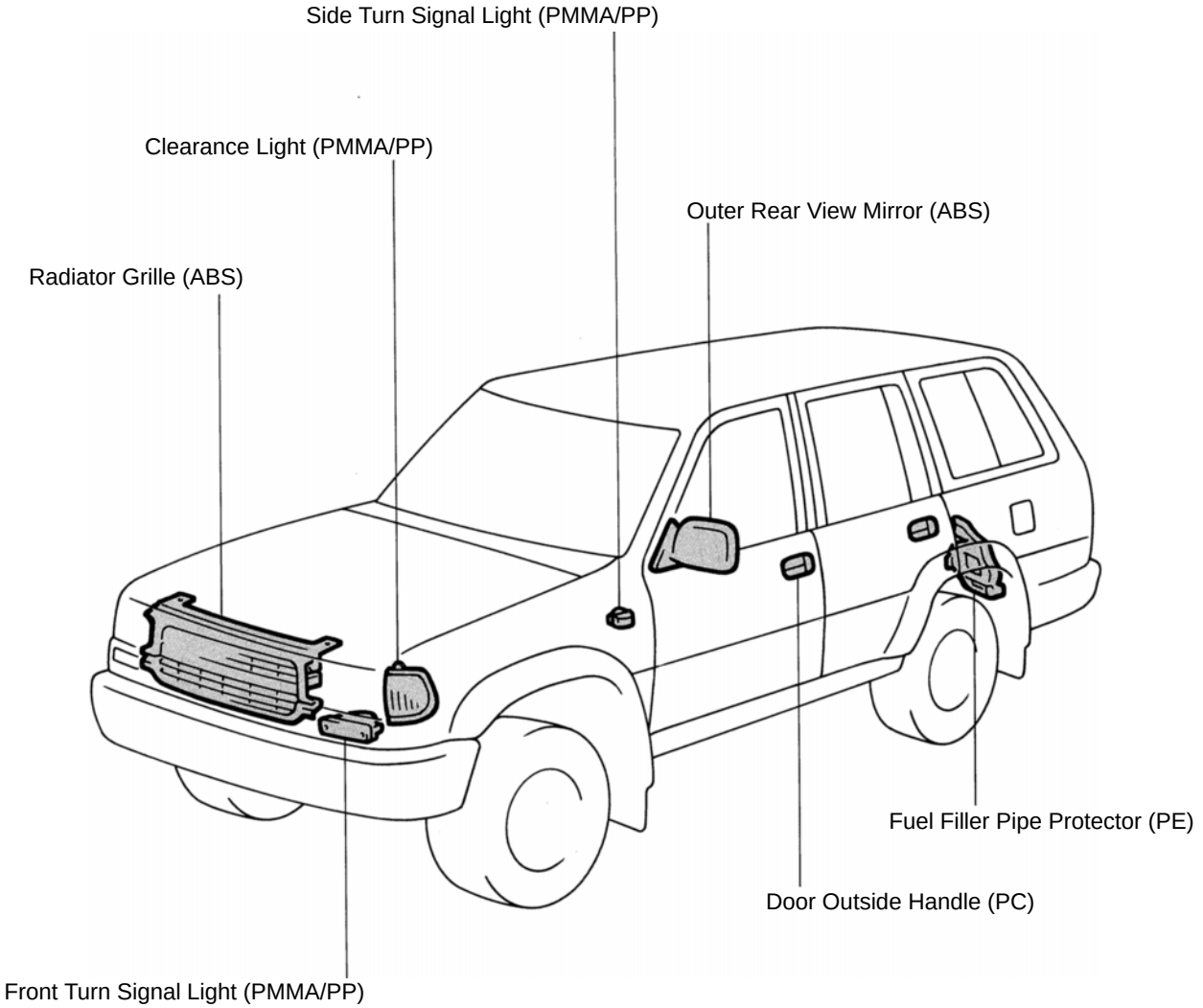

HINT:

- *Resin materiel differs with model.*

/ *Made up of 2 or more kinds of materials.*

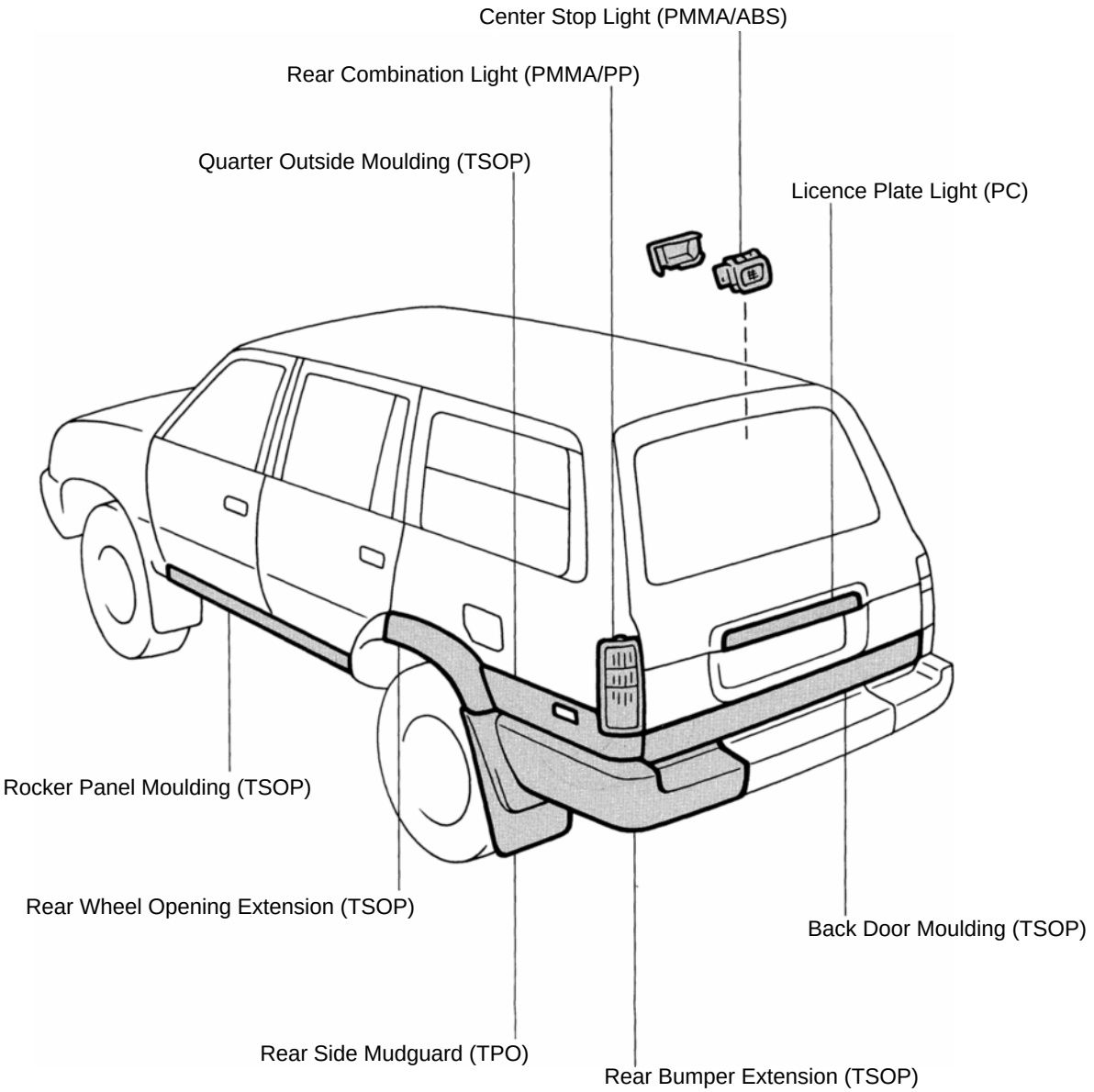

HINT:

- *Resin material differs with model.*

/ *Made up of 2 or more kinds of materials.*

FIT STANDARDS

After doors and the engine hood are installed, be sure to perform fit adjustment to prevent abnormal wind noise and ensure a good appearance.

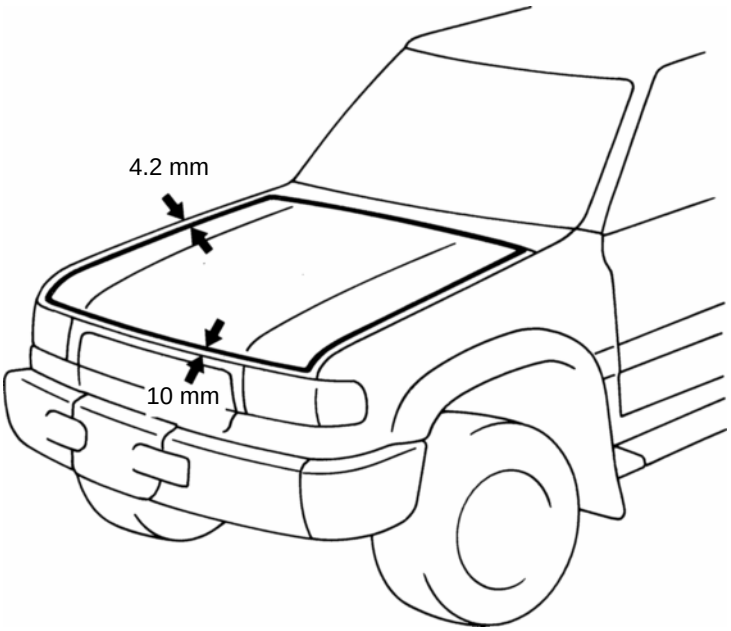

mm	in.
1.5	0.059
4.2	0.165
5.7	0.224
10	0.39

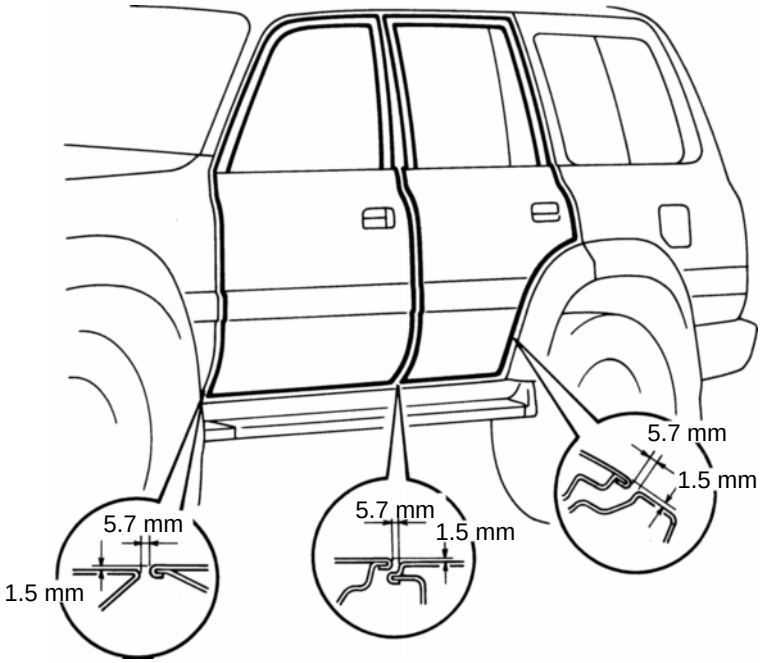

mm	in
5.5	0.213
6.3	0.248
10.8	0.425

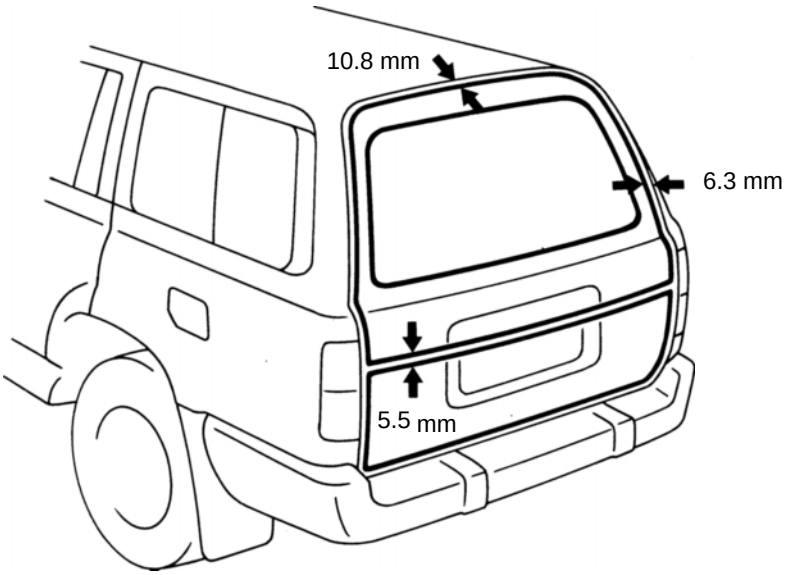

FRONT BODY PILLAR (CUT)

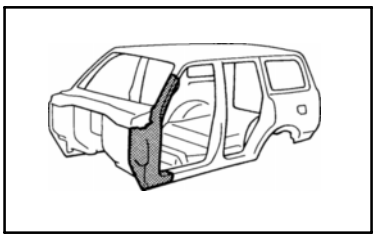

REMOVAL

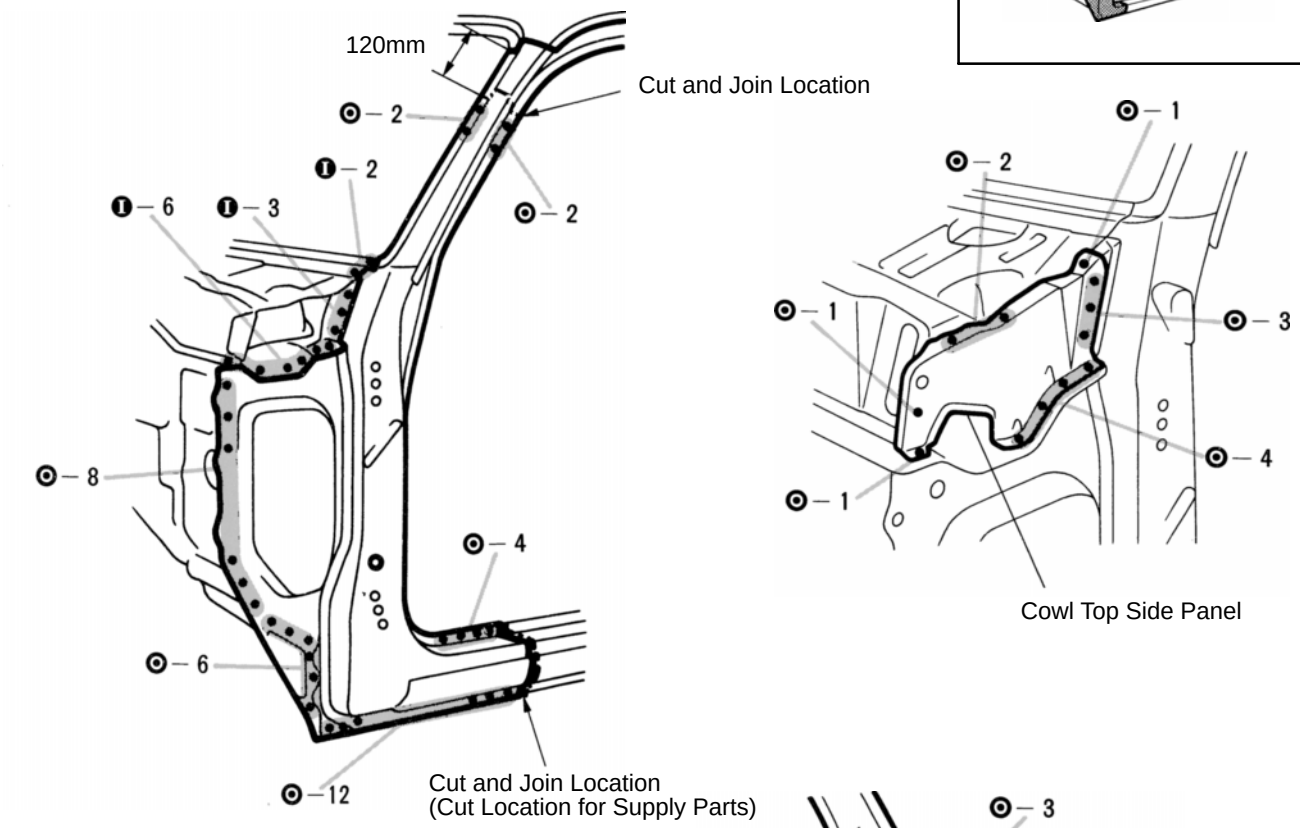

[Cut and Join Location]

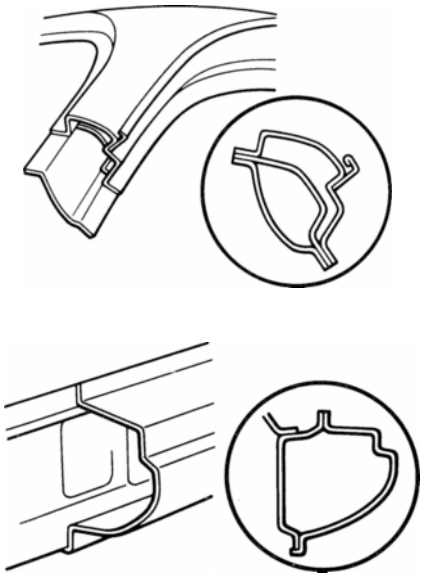

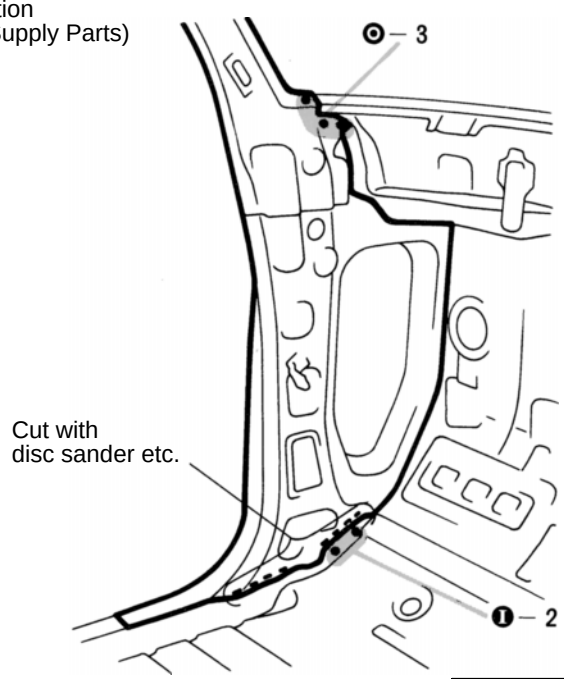

mm	in
120	4.72

1. Cut and join the parts at the locations shown above.
2. After removing the cowl top side panel remove the front body pillar.

INSTALLATION (Continued on Next Page)

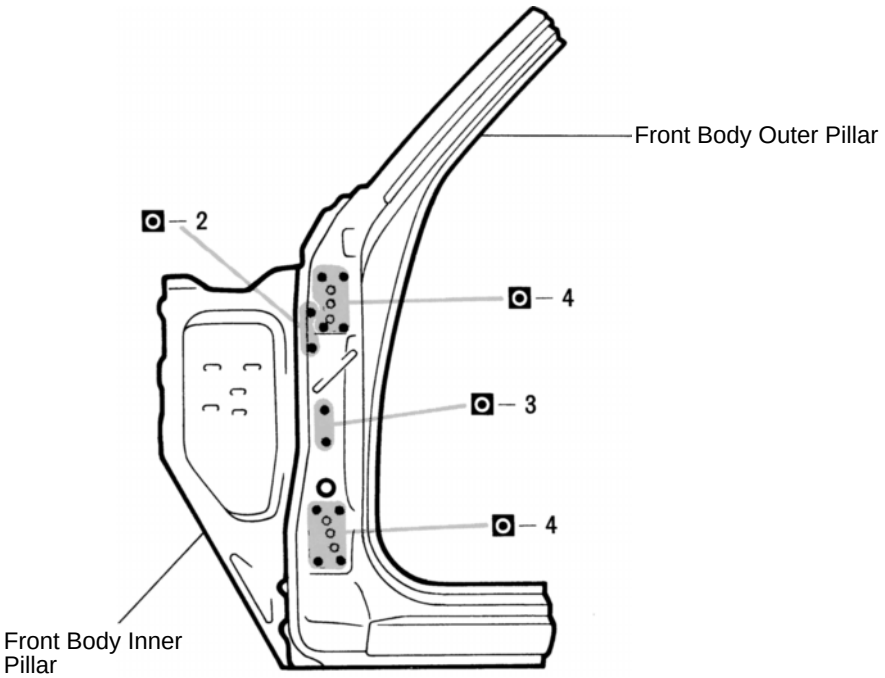

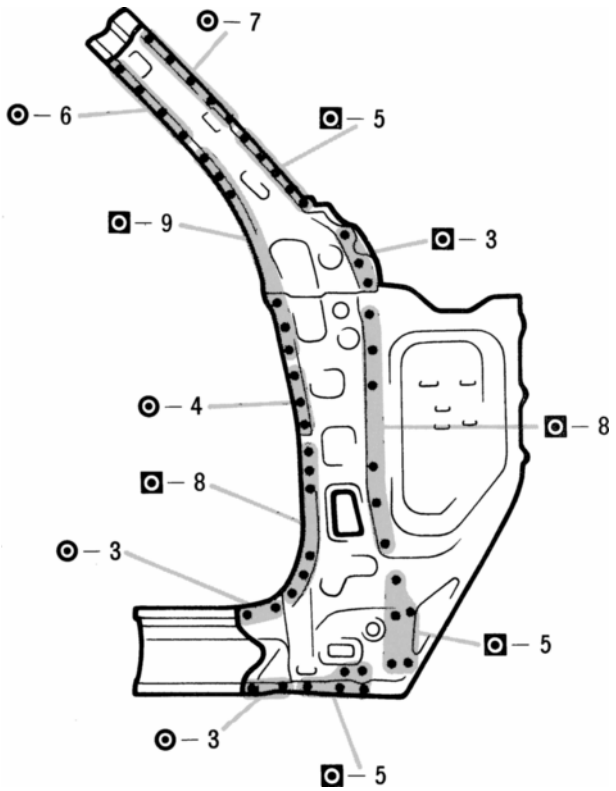

INSTALLATION (Cont'd)

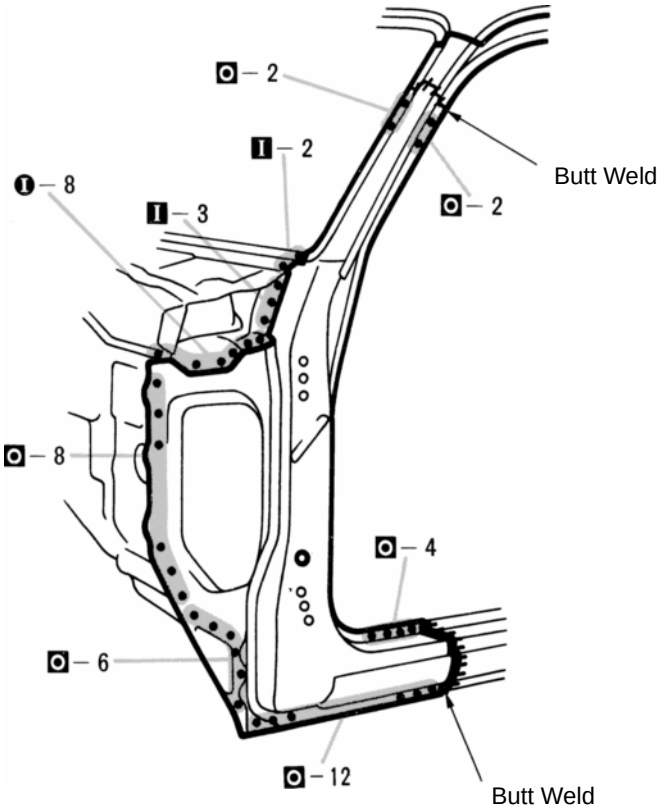

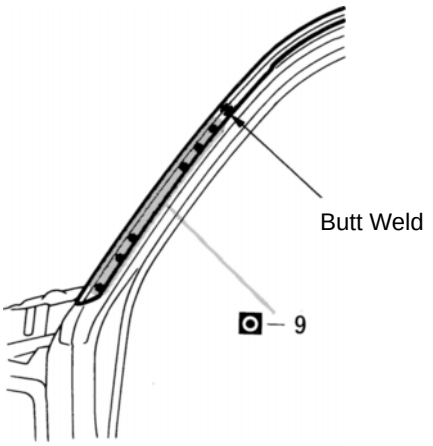

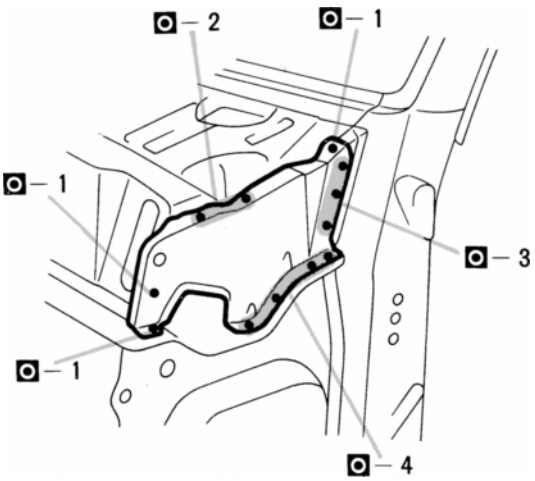

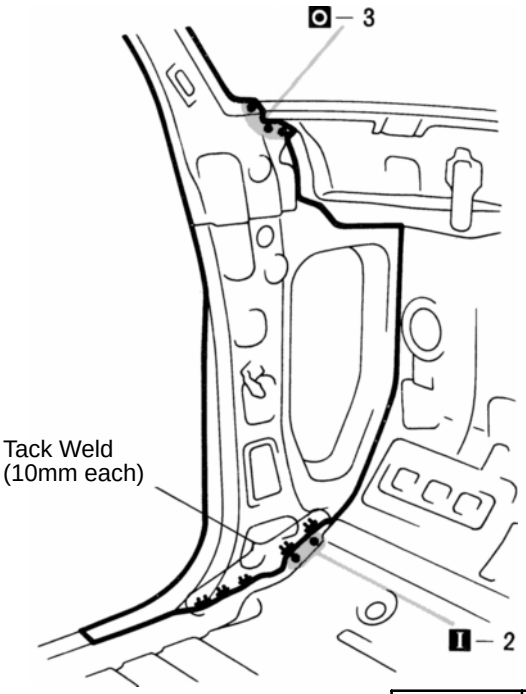

mm	in
10	0.39

CENTER BODY PILLAR (CUT)

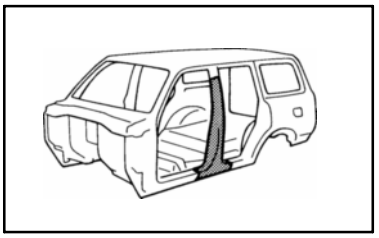

REMOVAL

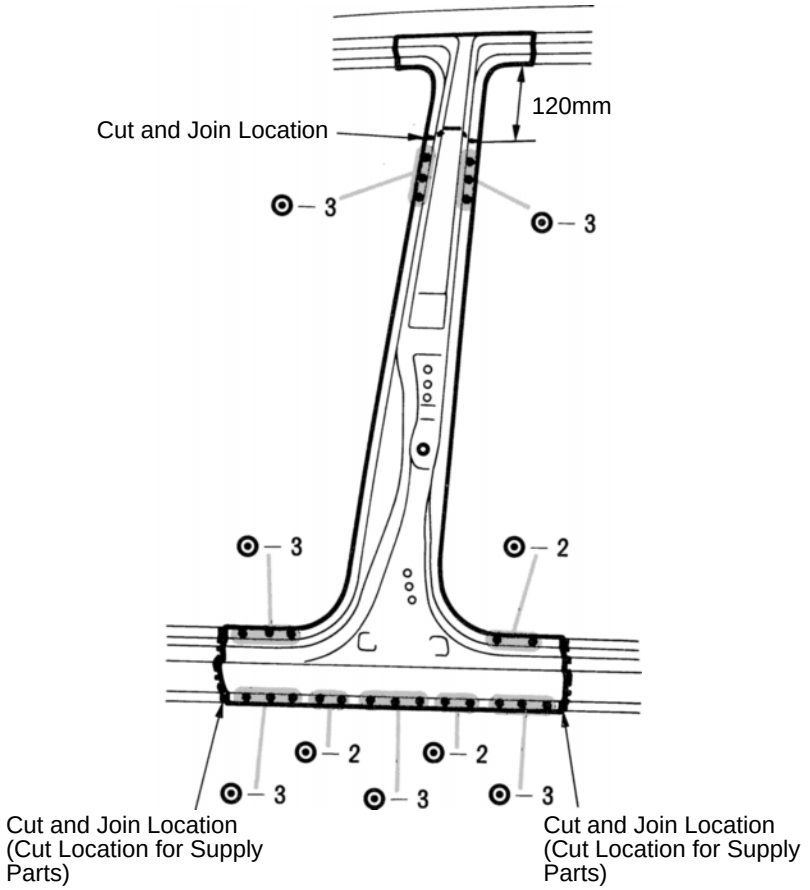

[Cut and Join Location]

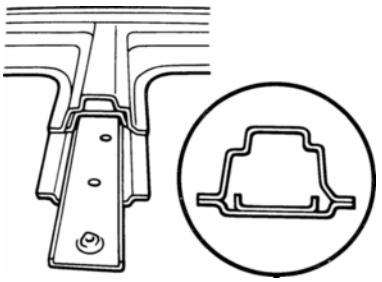

[Cut and Join Location]

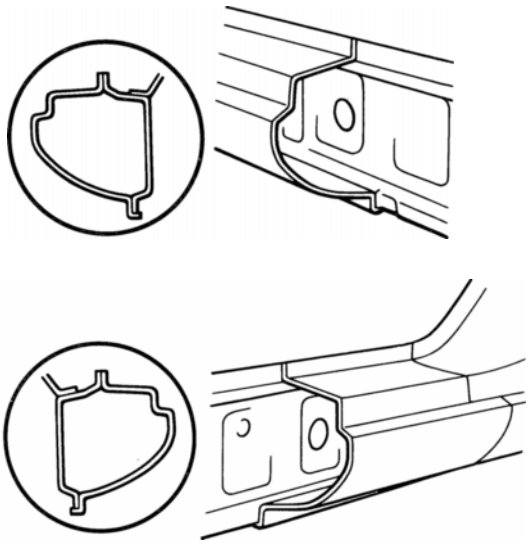

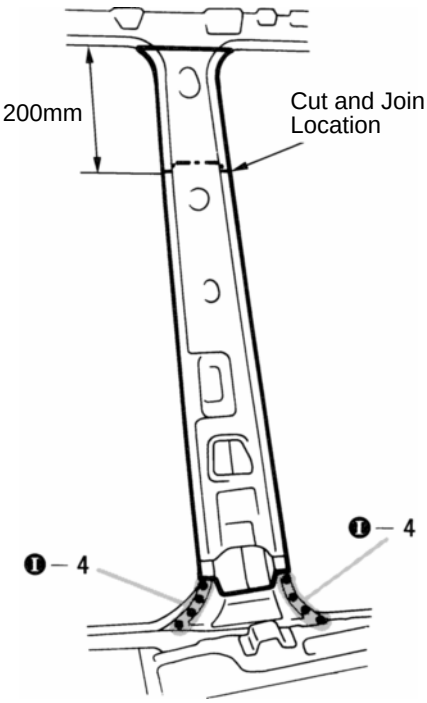

mm	in
120 200	4.72 7.87

1. Cut and join the parts at the location as shown above.

INSTALLATION

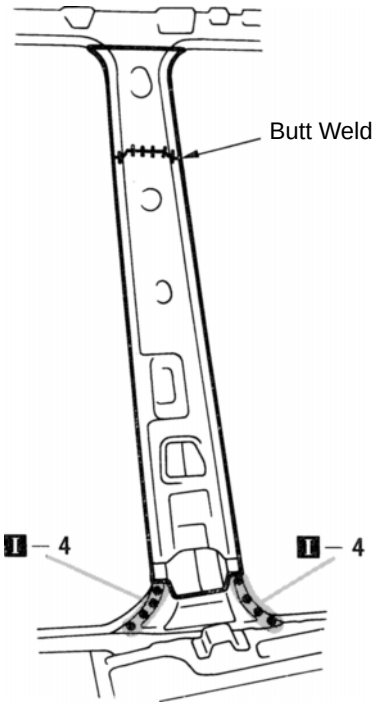

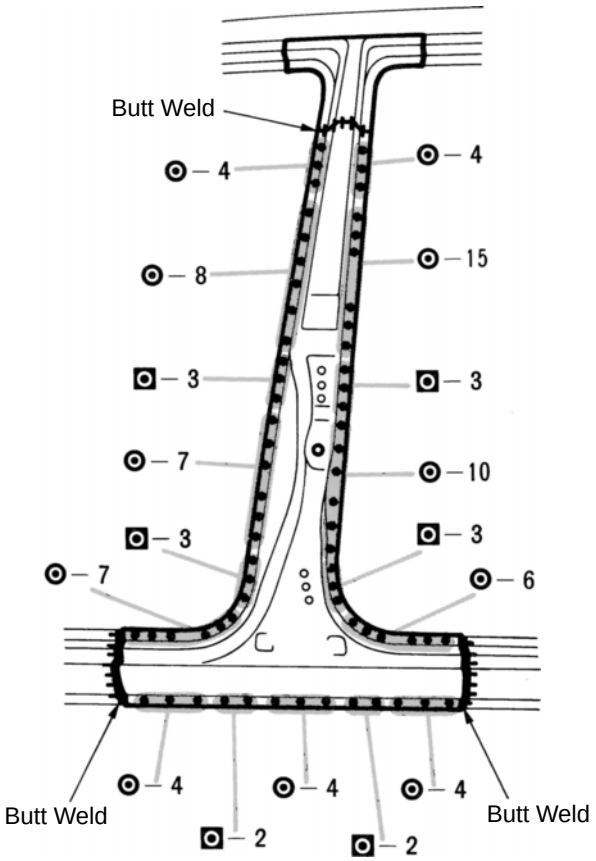

1. Temporarily install the new parts and measure each part in accordance with the body dimension diagram.
2. Temporarily install the new parts and check the fit of the front door and rear door.

FRONT DOOR OUTER PANEL (ASSY)

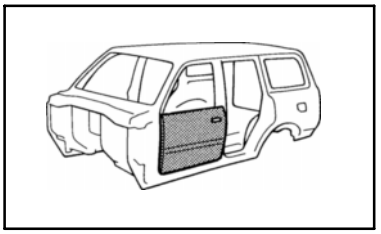

REMOVAL

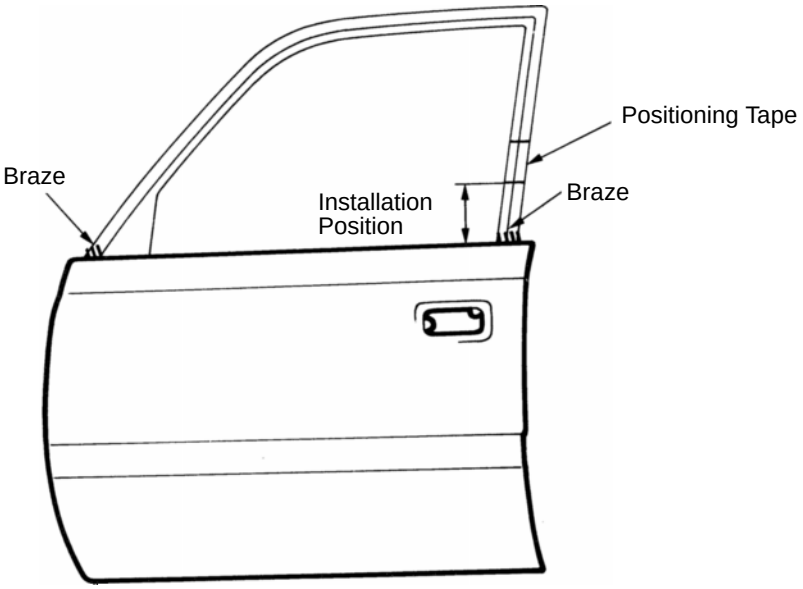

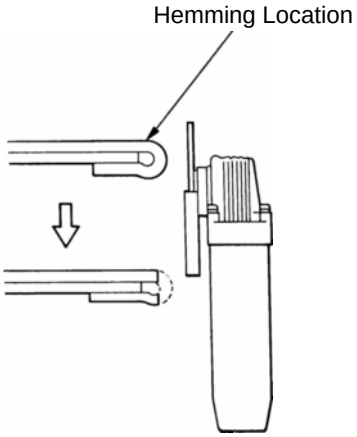

1. Before removing the outer panel, make the installation position with a tape.
2. After grinding off the hemming location, remove the outer panel.

INSTALLATION

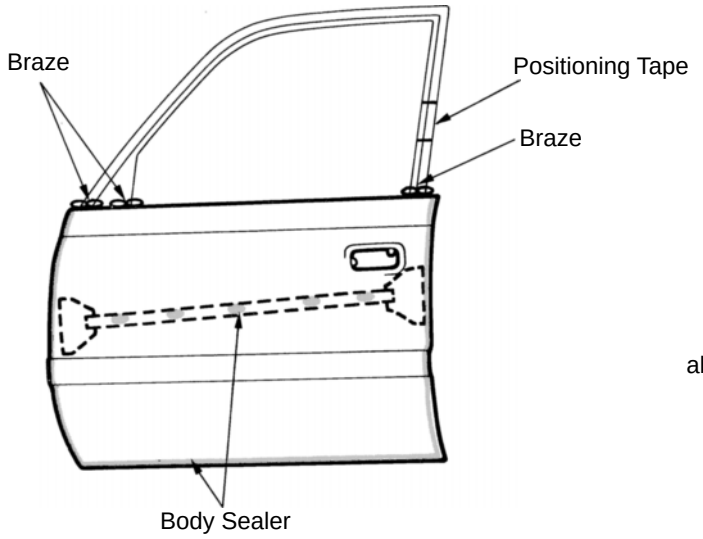

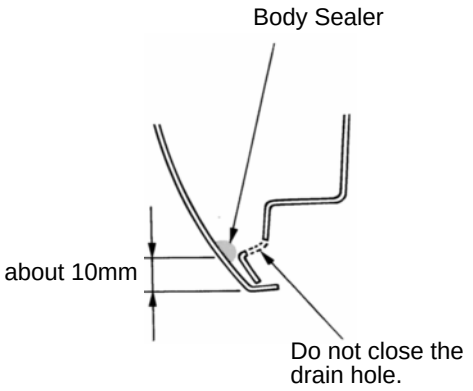

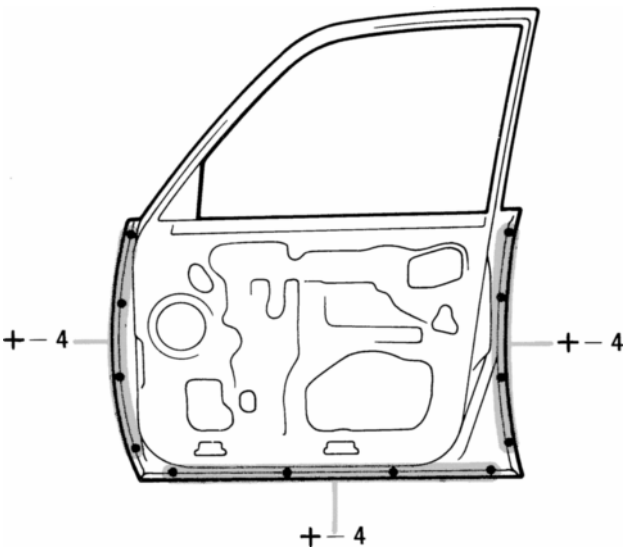

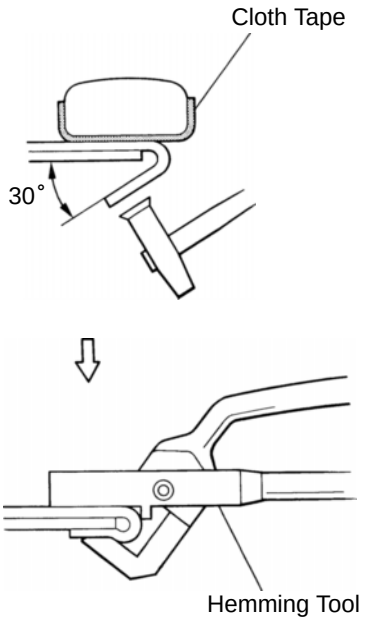

mm	in.
10	0.39

1. Before temporarily installing the new parts, apply body sealer to the side impact protection beam and back side of the new parts.

HINT:

1) Apply just enough sealer for the reinforcement and side impact beam to touch the new panel. Apply sealer evenly around the flange area, about 10mm (0.39in.) from the edge, as shown.

2) For other sealing points, refer to section AR.

2. Bend the flange hem about 30˚ with a hammer and dolly, then fasten tightly with a hemming tool.

HINT:

1) Perform hemming in three steps, being careful not to warp the panel.

2) If a hemming tool cannot be used, hem with a hammer and dolly.

REAR DOOR OUTER PANEL (ASSY)

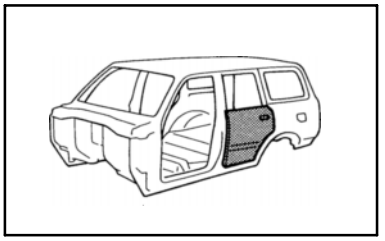

REMOVAL

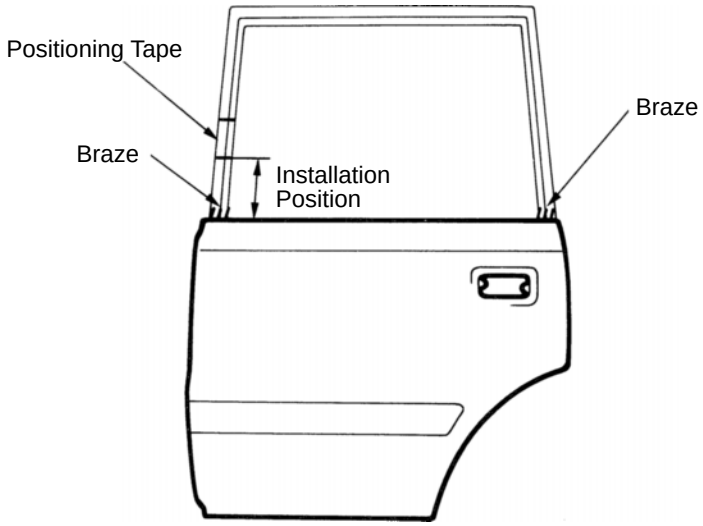

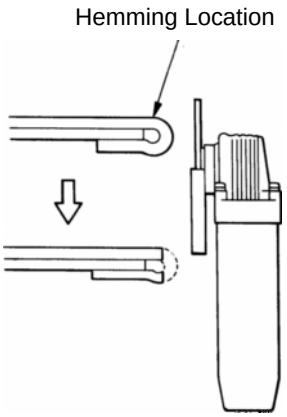

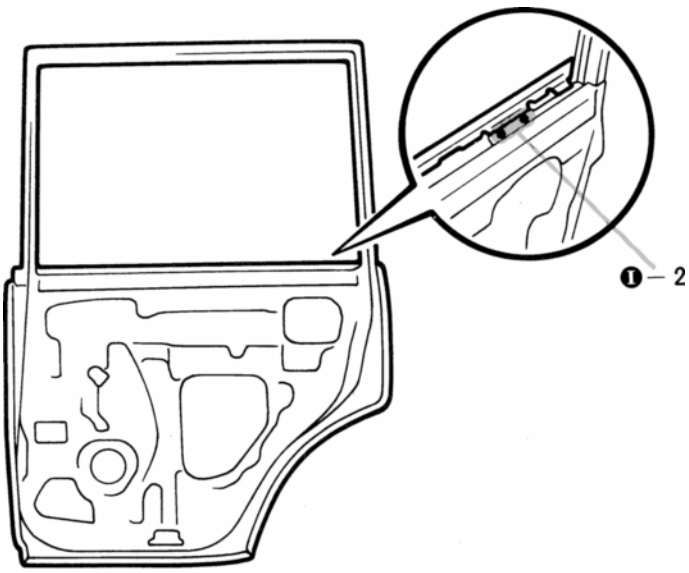

1. Before removing the outer panel, make the installation position with a tape.
2. Grind out the hemming location and remove the outer panel.

INSTALLATION

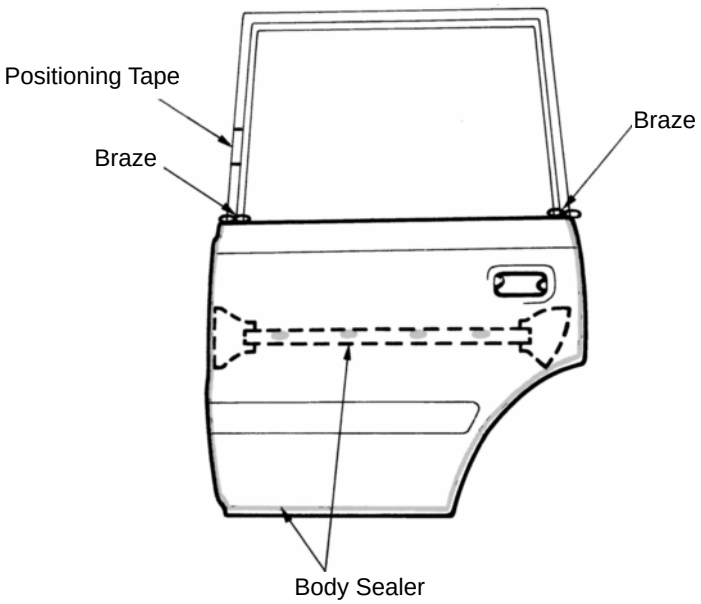

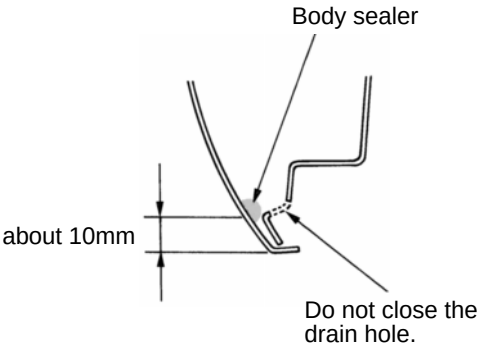

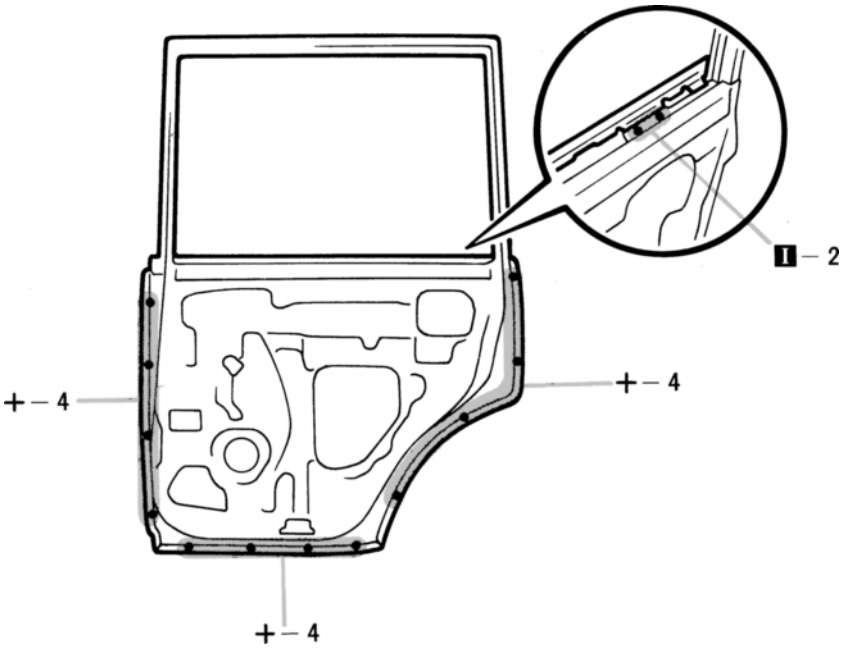

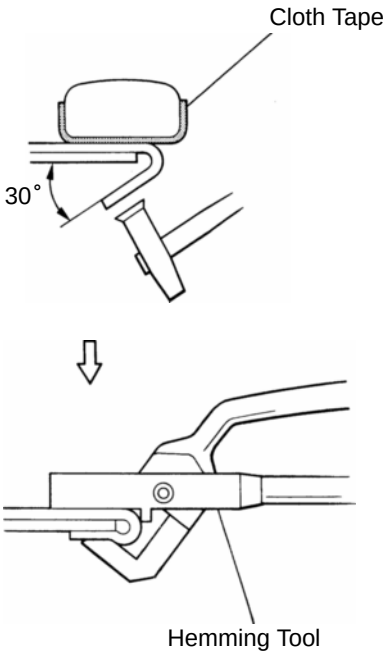

mm	in.
10	0.39

1. Before temporarily installing the new parts, apply body sealer to the side impact protection beam and back side of the new parts.

HINT:

1) Apply sealer evenly about 10mm (0.39in.) from the flange and 3mm (0.12in.) in diameter to the outer panel and apply just enough sealer for the side impact protection beam to make contact.

2) For other sealing points, refer to section AR.

2. Bend the flange hem about 30° with a hammer and dolly, then fasten tightly with a hemming tool.

HINT:

1) Perform hemming in three steps, being careful not to warp the panel.

2) If a hemming tool cannot be used, hem with a hammer and dolly.

ROCKER OUTER PANEL (CUT)

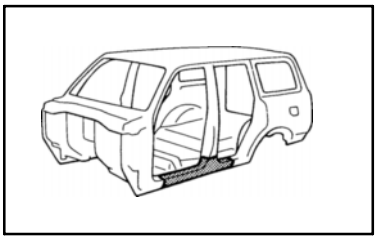

REMOVAL

[Cut and Join Location]

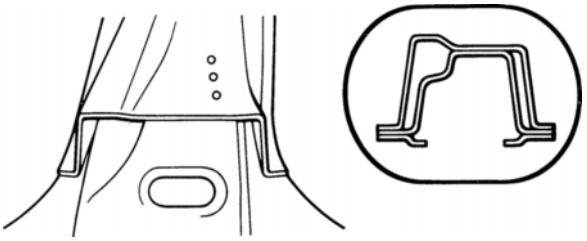

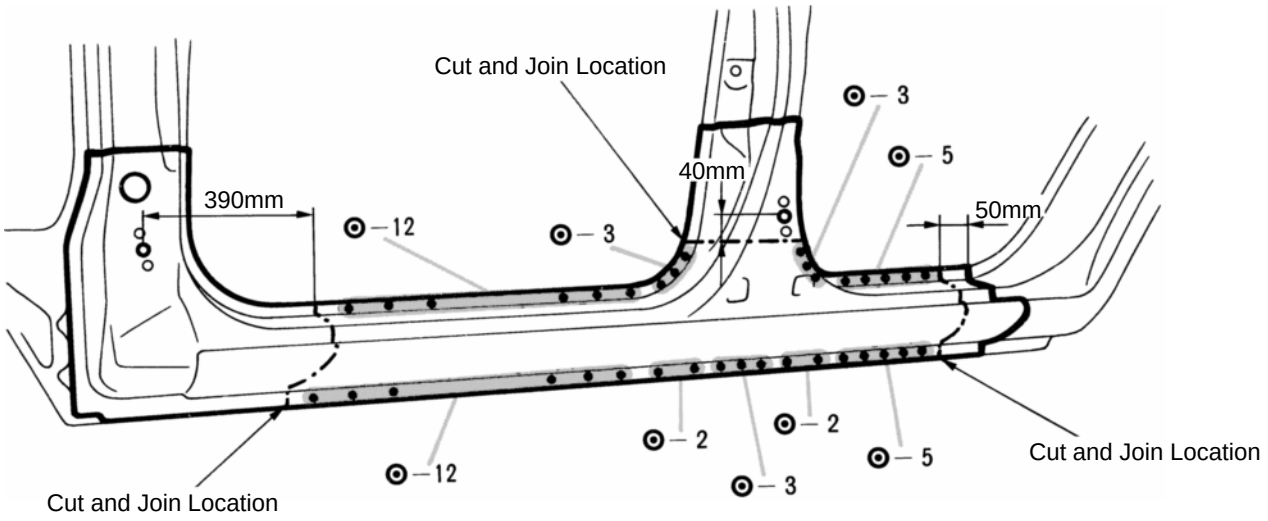

[Cut and Join Location]

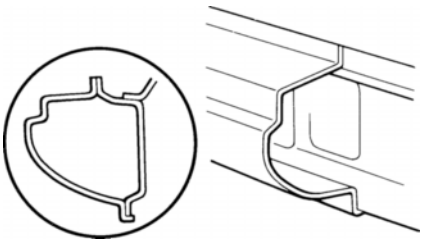

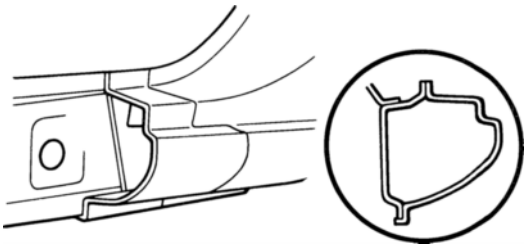

mm	in.
40	1.57
50	1.96
390	15.35

1. Cut and join the parts at the location shown above.

INSTALLATION

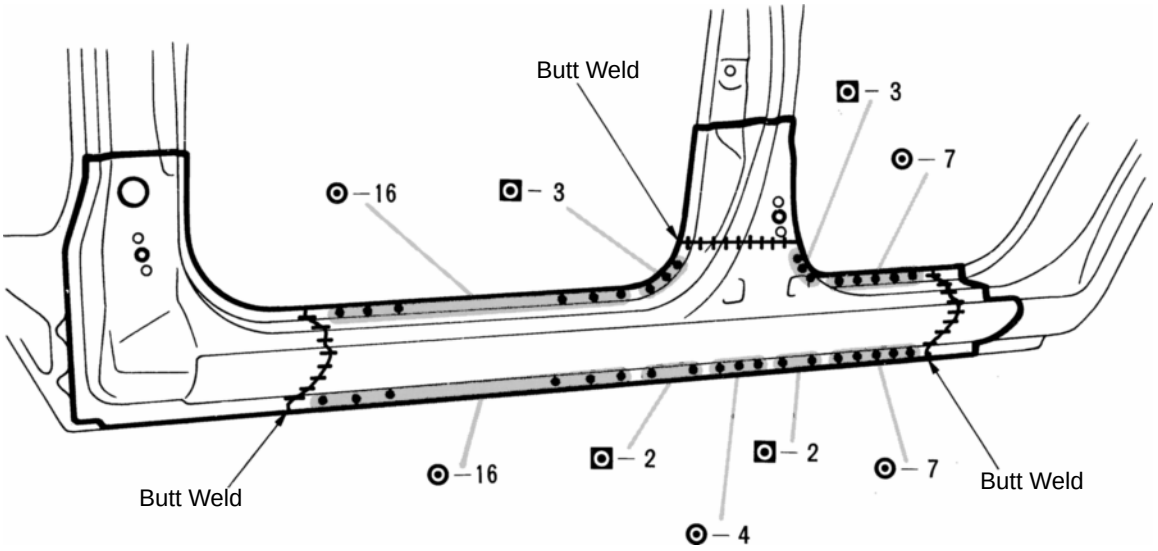

1. Temporarily install the new parts and check the fit of the front door and rear door.

QUARTER PANEL (CUT)

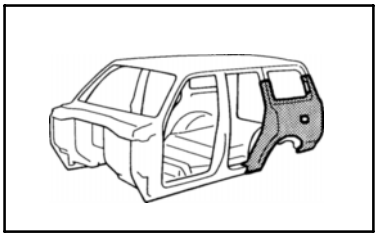

REMOVAL

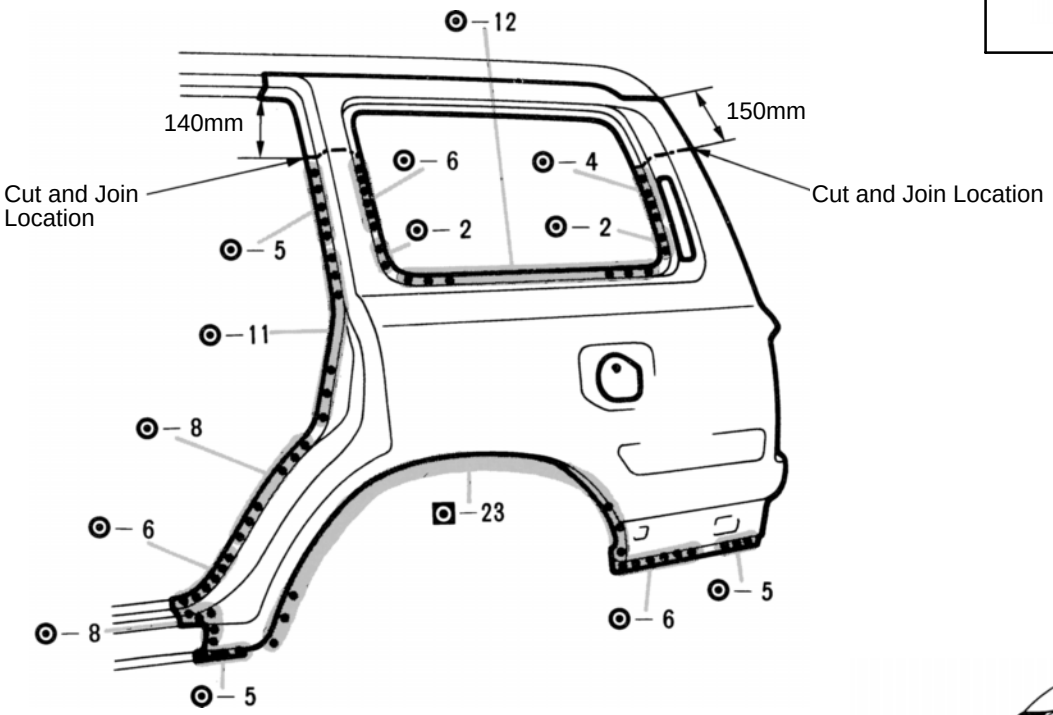

Cut and Join Location

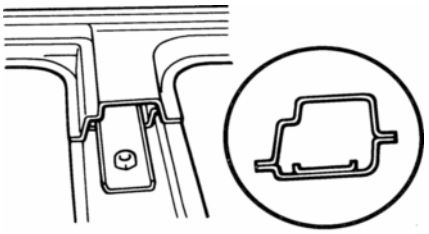

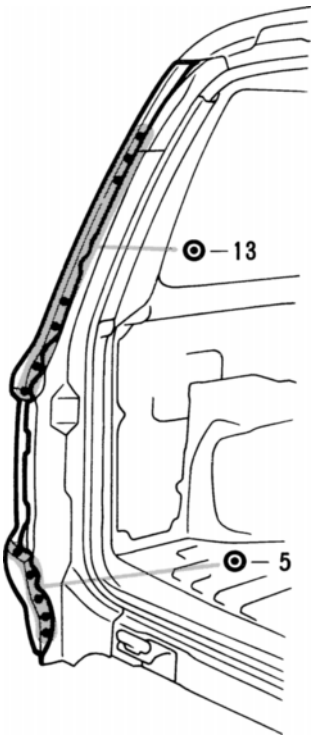

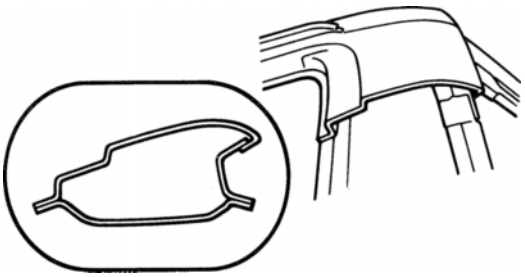

mm	in.
140 150	5.51 5.90

1. Cut and join the parts at the location shown above.

INSTALLATION

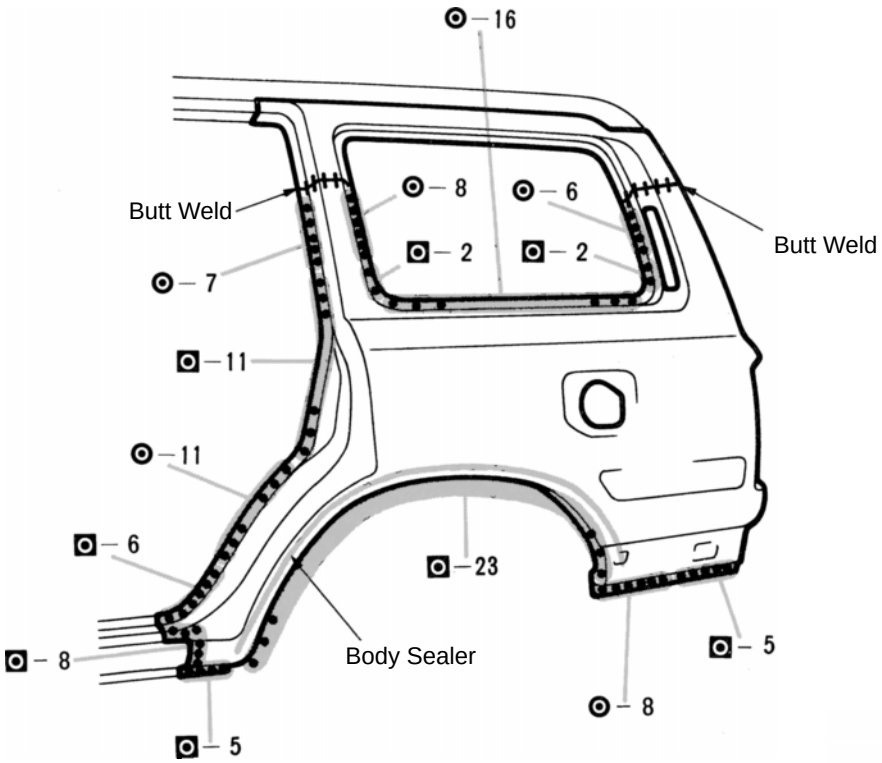

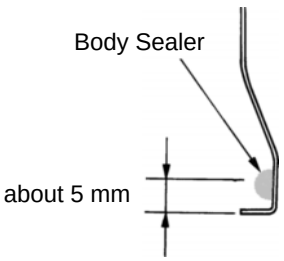

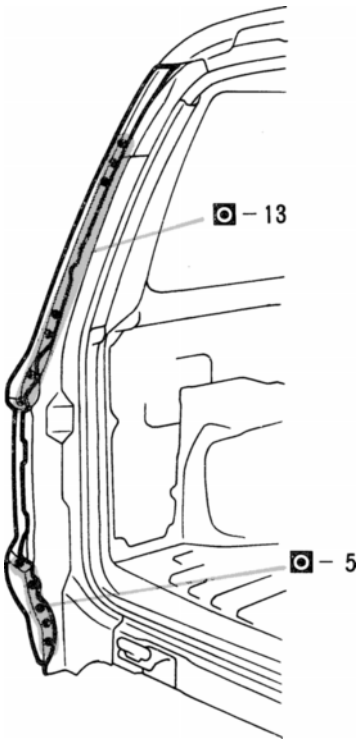

mm	in.
5	0.20

1. Before temporarily installing the new parts, apply body sealer to the wheel arch.

HINT:

1) Apply body sealer about 5 mm (0.20in.) from the flange, avoiding any oozing.

2) Apply sealer evenly, about 3 - 4 mm (0.12 - 0.16in.) in diameter.

3) For other sealing points, refer to section AR.

2. Temporarily install the new parts and check the fit of the rear door, back door and rear combination light.

QUARTER PANEL (CUT-P)

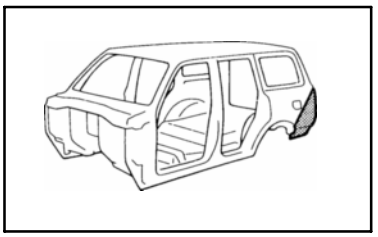

REMOVAL

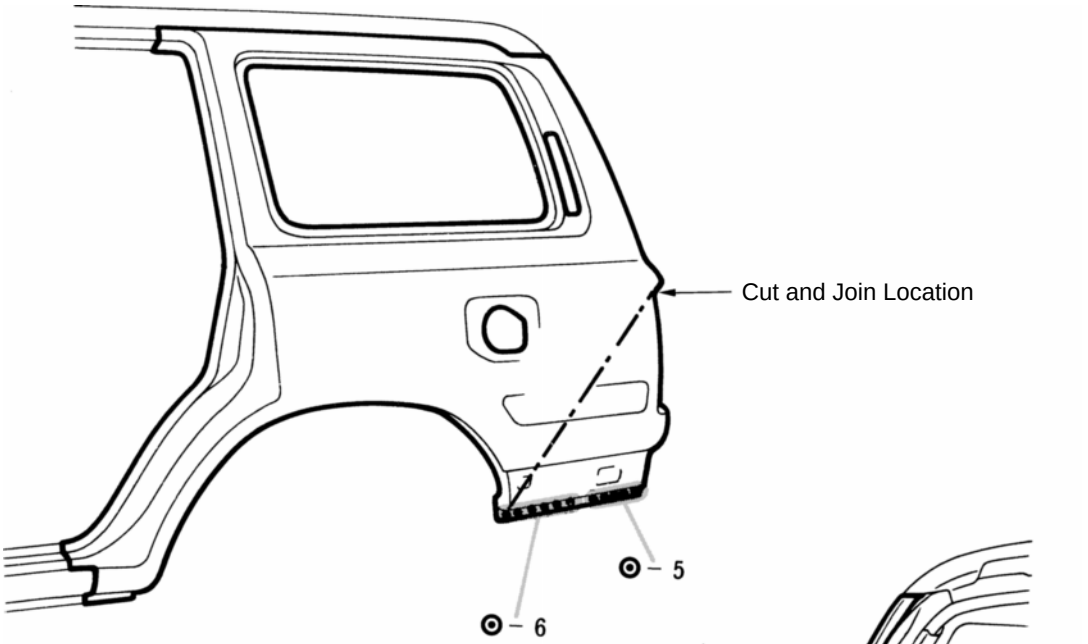

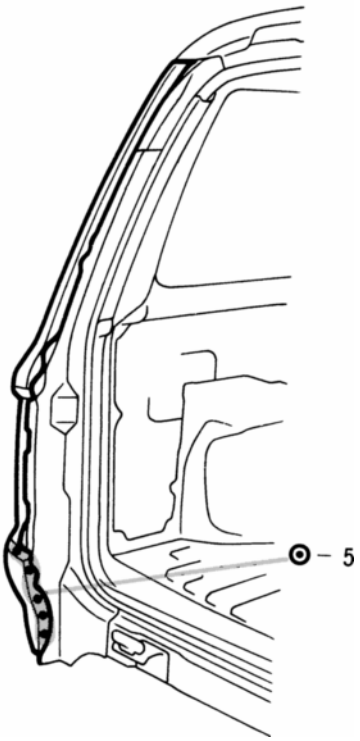

1. Cut and join the parts at the locations shown above.

INSTALLATION

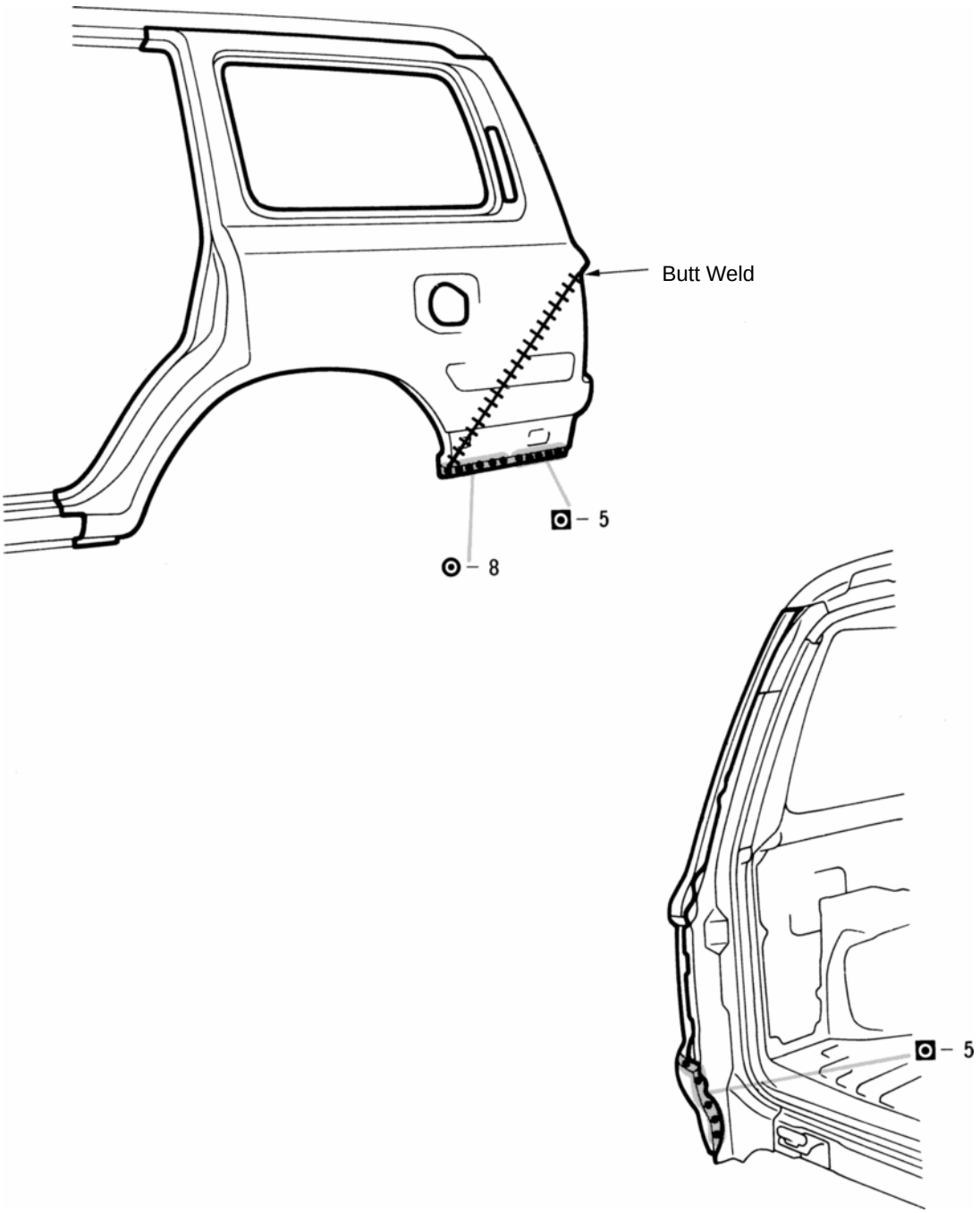

1. Temporarily install the new parts and check the fit of the back door and rear combination light.

QUARTER WHEEL HOUSING OUTER PANEL (ASSY): Right Side

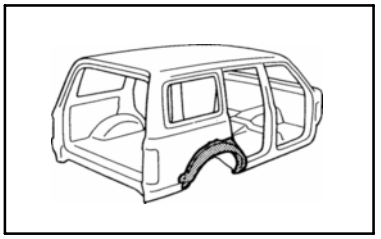

REMOVAL (With the quarter panel removed.)

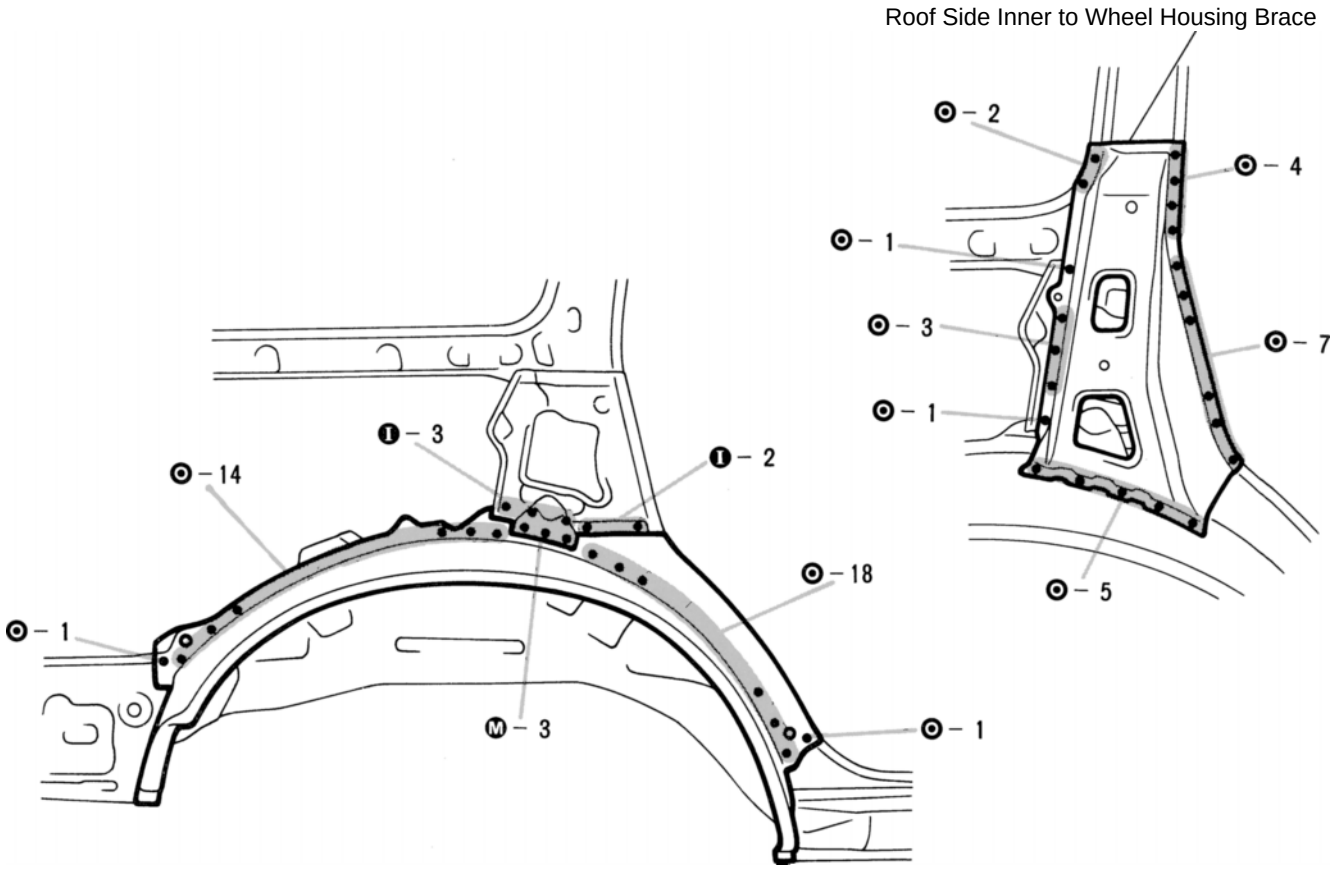

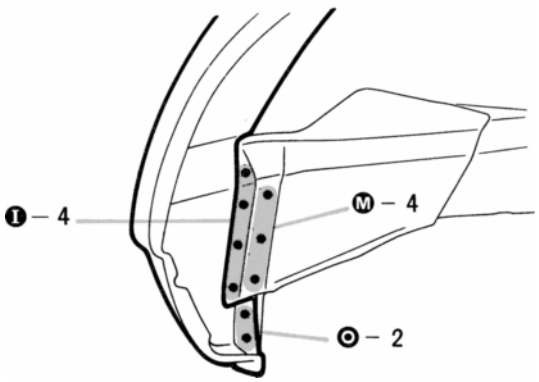

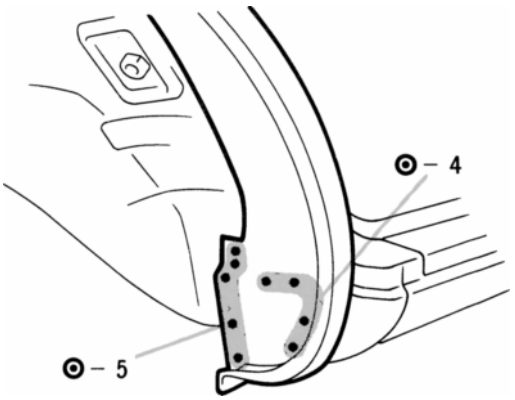

1. After removing the roof side inner to wheel housing brace, remove the quarter wheel housing outer panel.

INSTALLATION

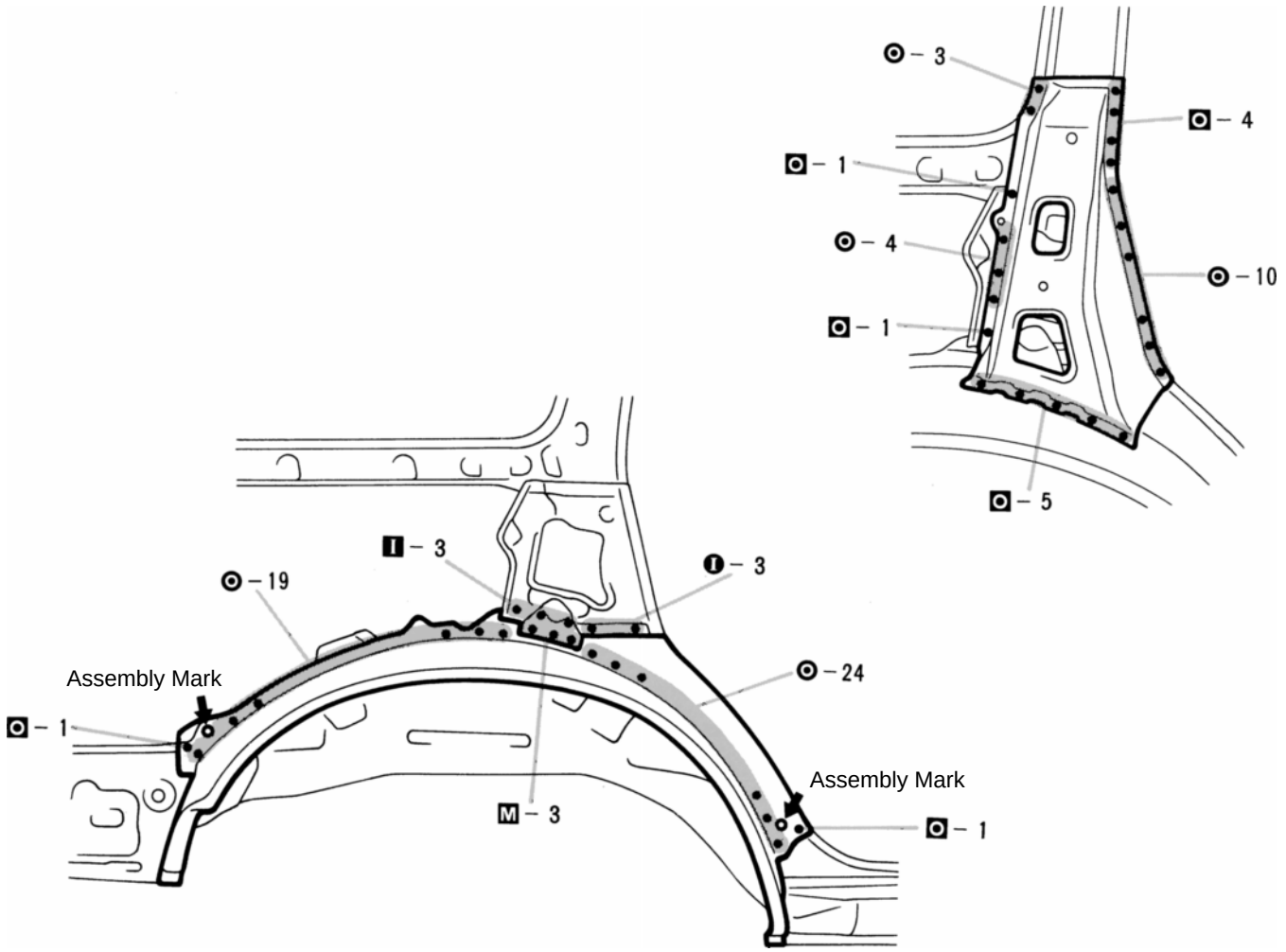

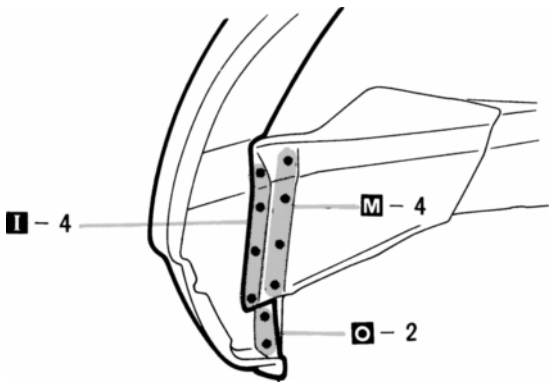

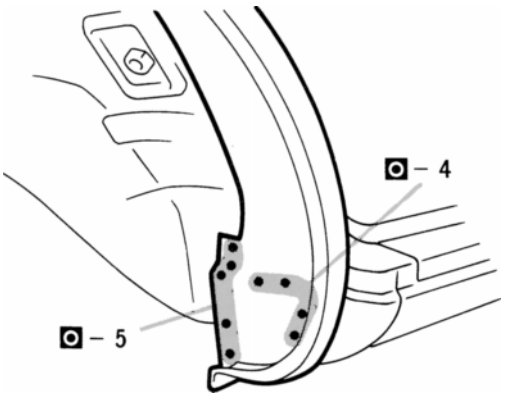

1. Determine the position of the new parts by the assembly marks of the inner and outer panels.
2. Before welding the new parts, temporarily install the quarter panel and check the fit.

QUARTER WHEEL HOUSING OUTER PANEL (ASSY): Left Side

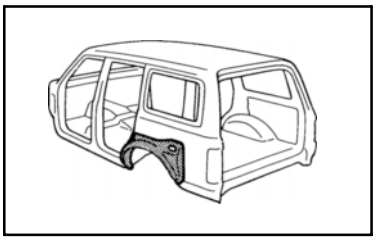

REMOVAL (With the quarter panel removed.)

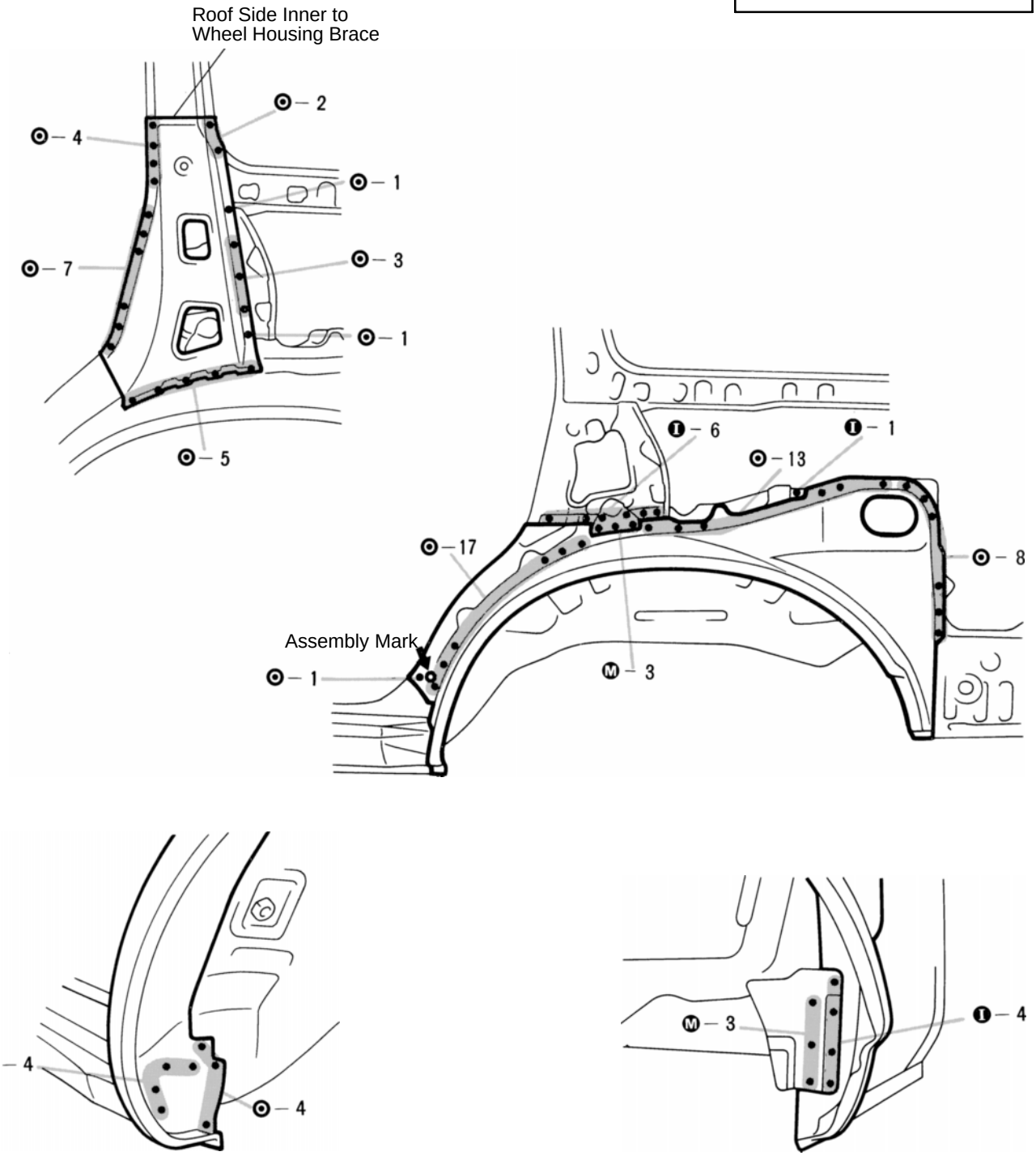

1. After removing the roof side inner to wheel housing brace, remove the quarter wheel housing outer panel.

INSTALLATION

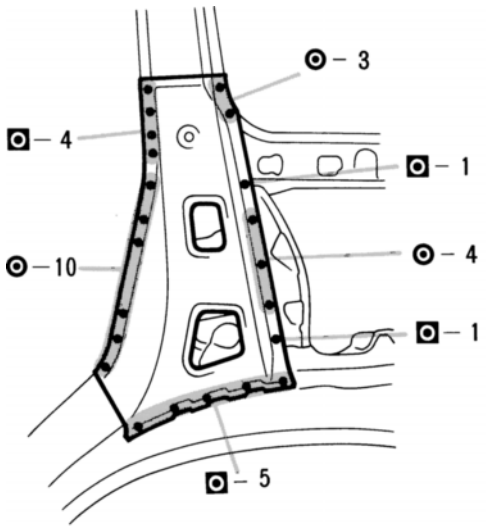

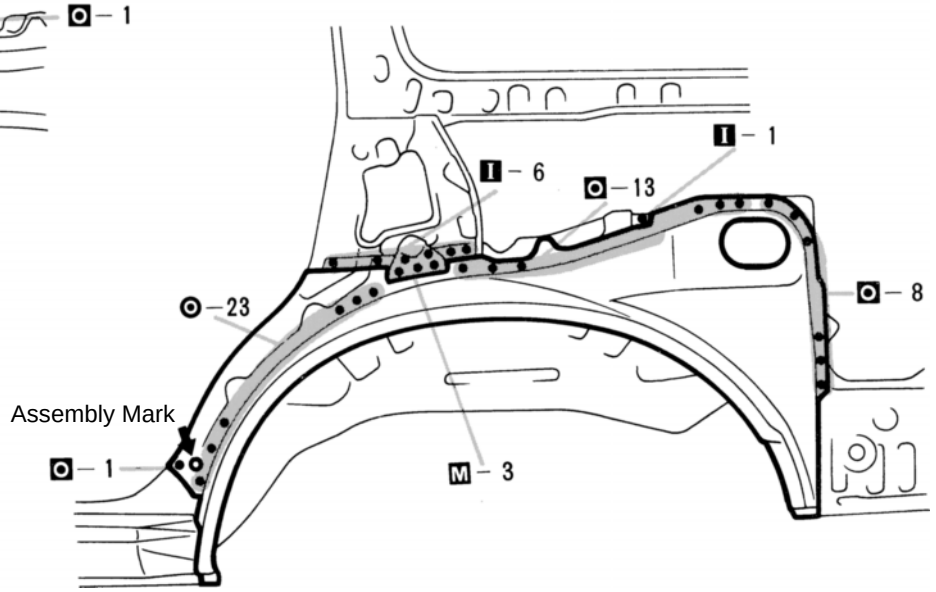

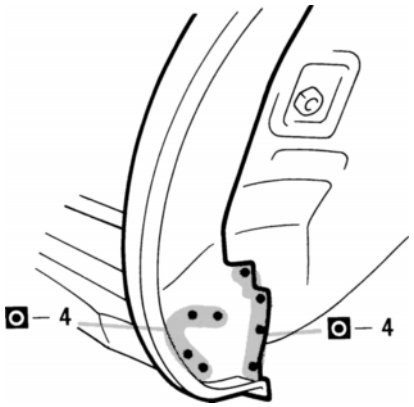

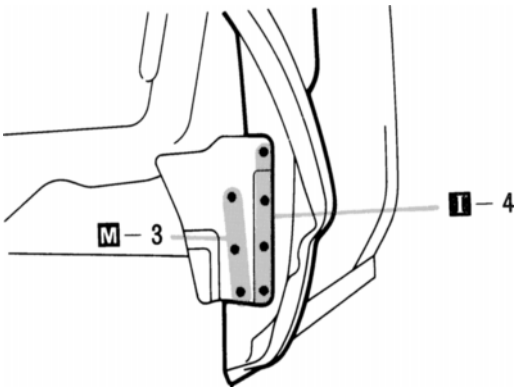

1. Determine the position of the new parts by the assembly marks of the inner and outer panels.
2. Before welding the new parts, temporarily install the quarter panel and check the fit.

QUARTER PANEL EXTENSION (ASSY)

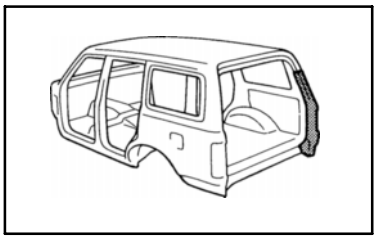

REMOVAL (With the quarter panel removed.)

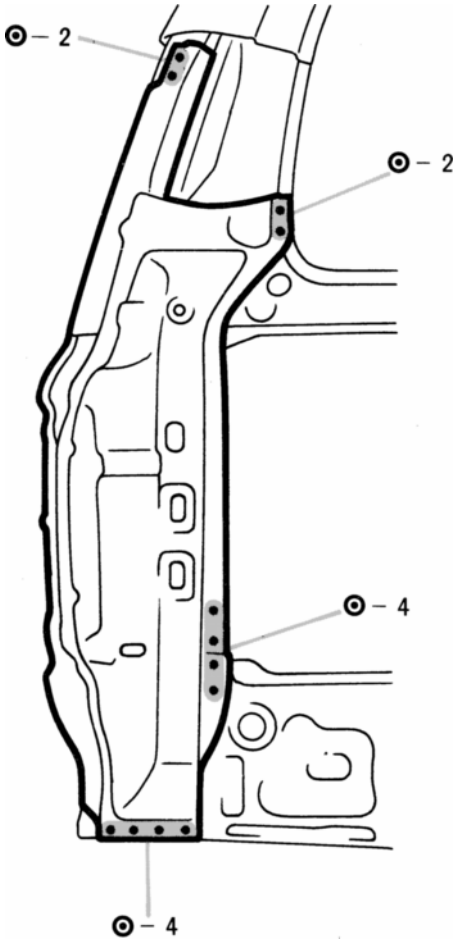

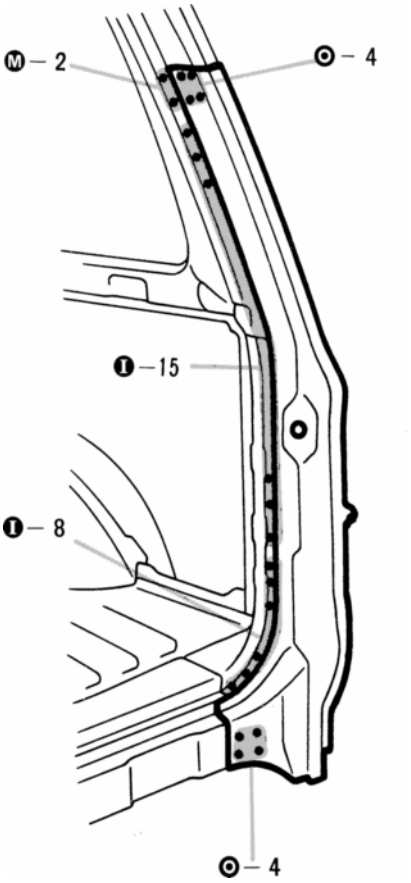

INSTALLATION

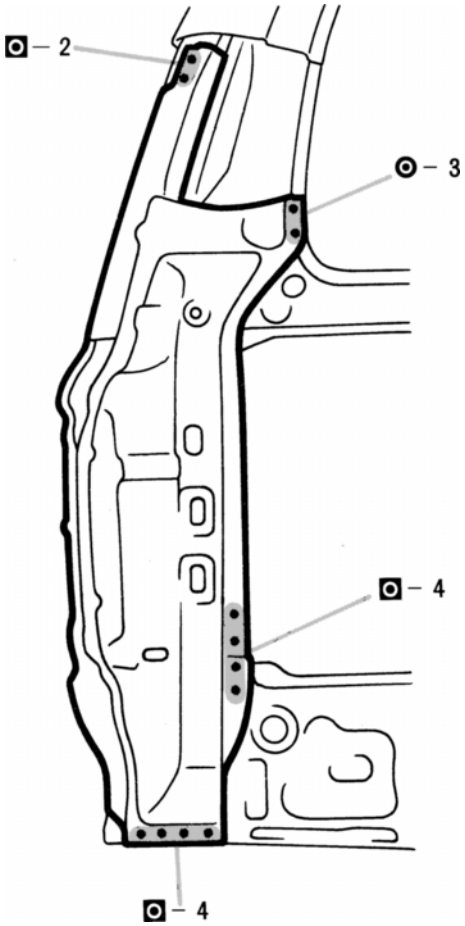

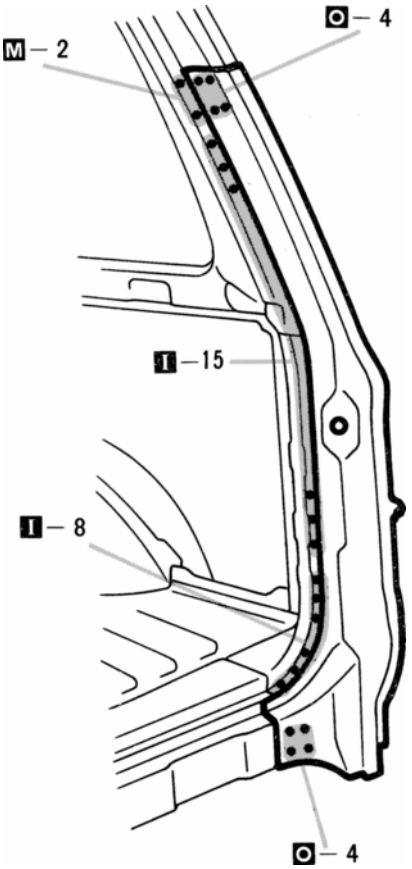

BODY LOWER BACK PANEL (CUT)

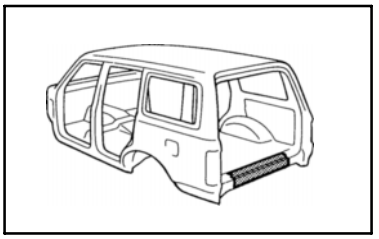

REMOVAL

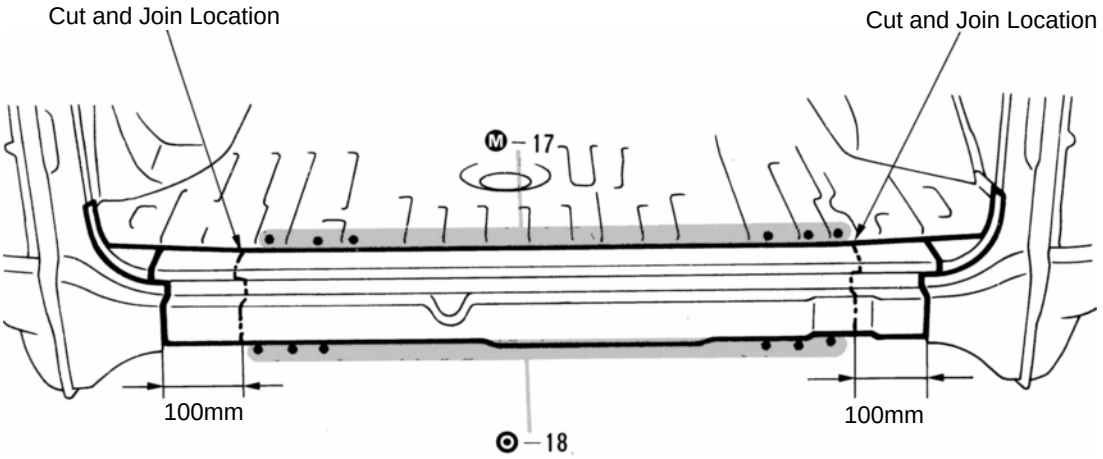

mm	in
100	3.94

1. Cut and join the parts at the location shown above.

INSTALLATION

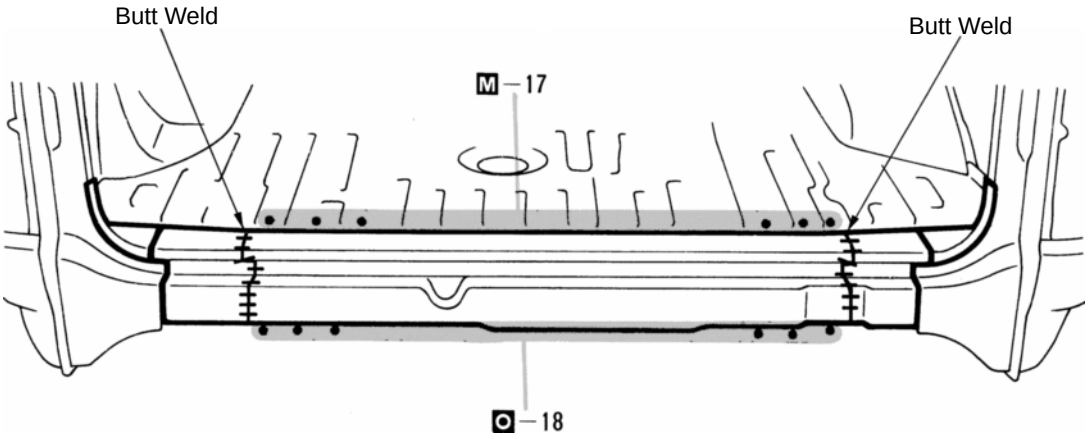

1. Temporarily installing the new parts, check the fit of the back door.

BODY LOWER BACK PANEL (CUT)

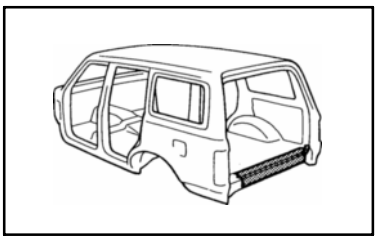

REMOVAL (With the quarter panel extension removed.)

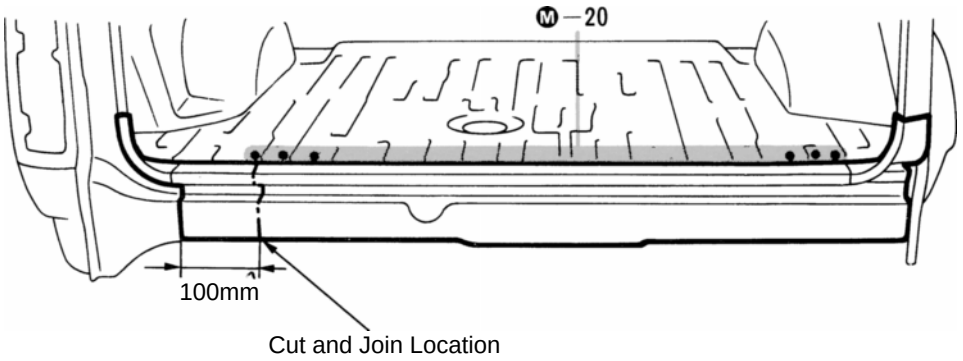

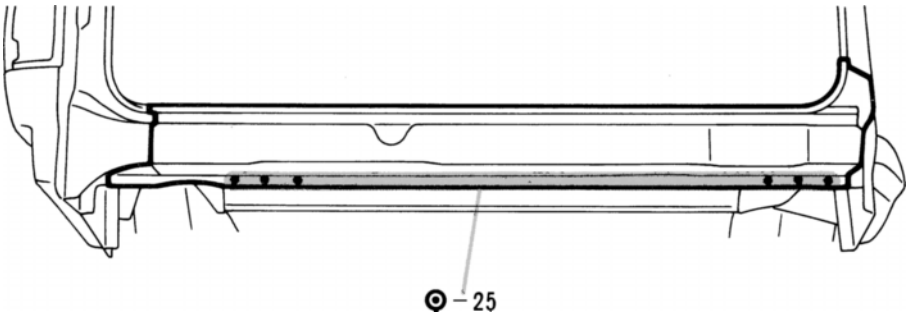

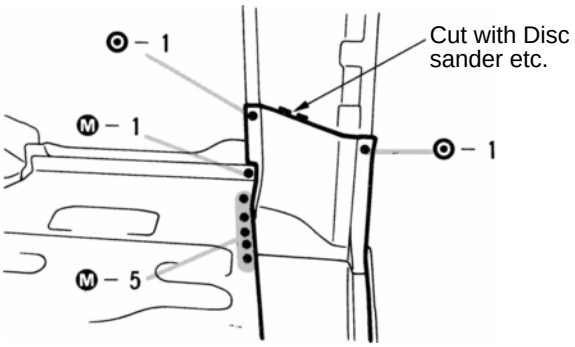

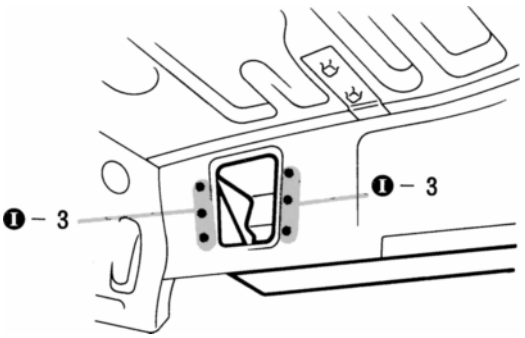

mm	in
100	3.94

1. Cut and join the parts at the location shown above.

INSTALLATION

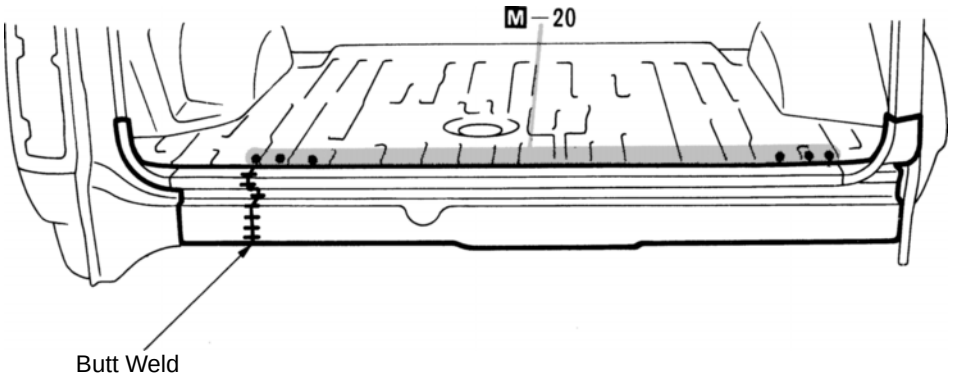

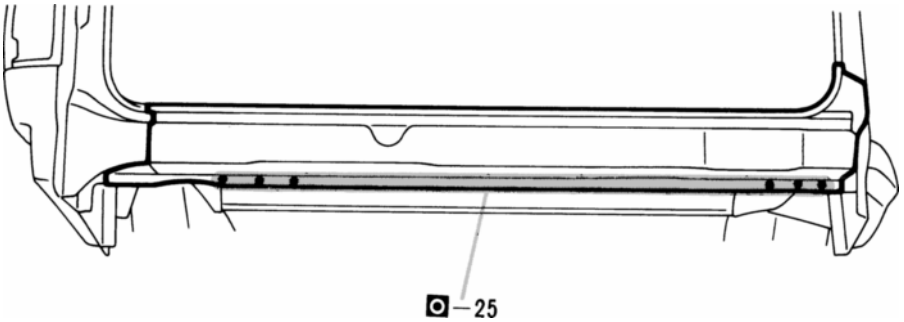

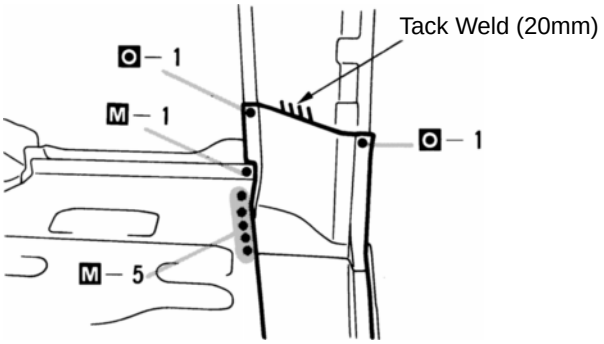

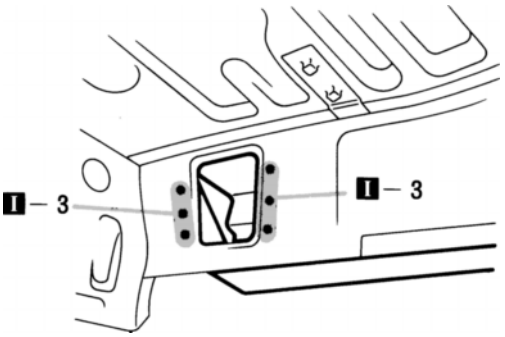

mm	in
20	0.79

REAR FLOOR INNER CROSSMEMBER (CUT)

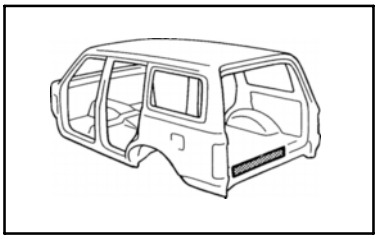

REMOVAL (With the body lower back panel removed.)

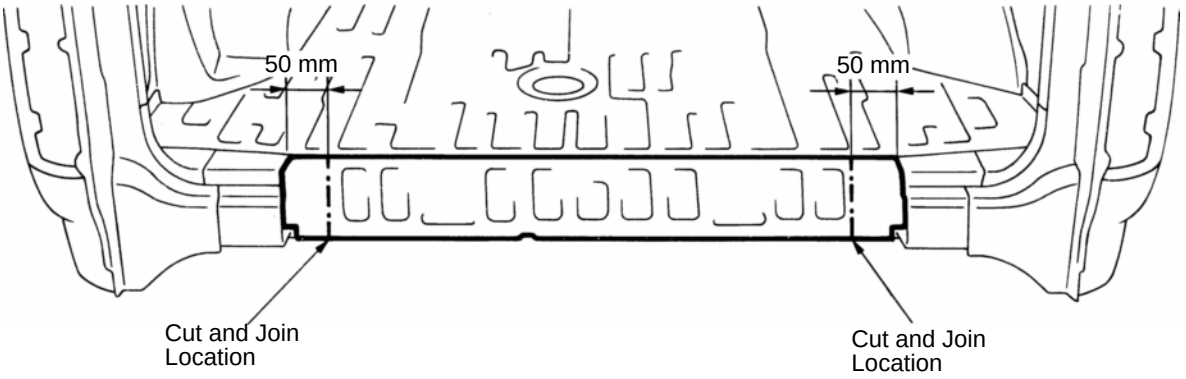

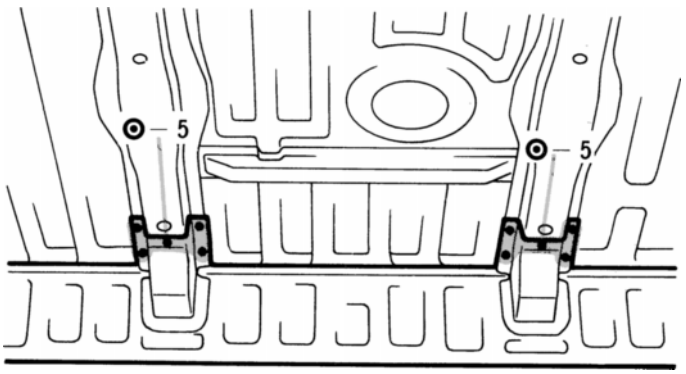

mm	in
50	1.97

1. Cut and join the parts at the location shown above.

INSTALLATION

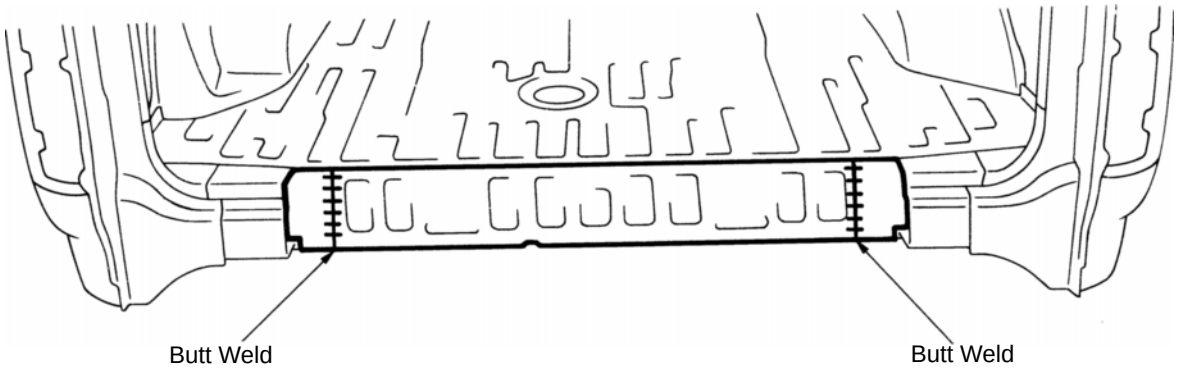

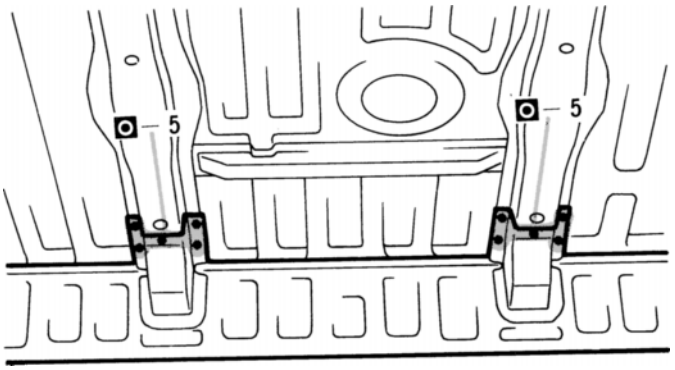

1. Before welding the new parts, temporarily install the body lower back panel and check the fit.

REAR FLOOR PAN (ASSY)

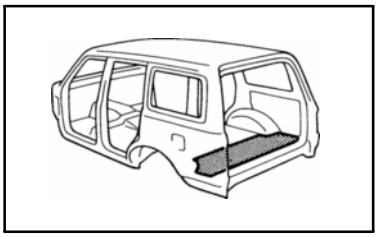

REMOVAL (With the rear floor inner corssmember removed.)

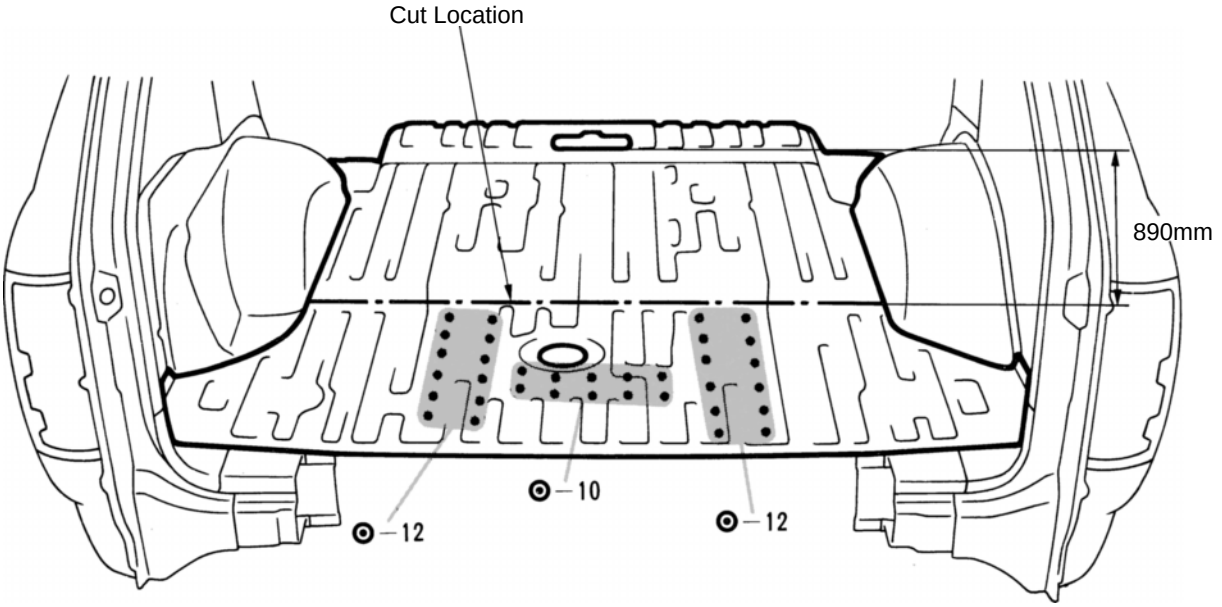

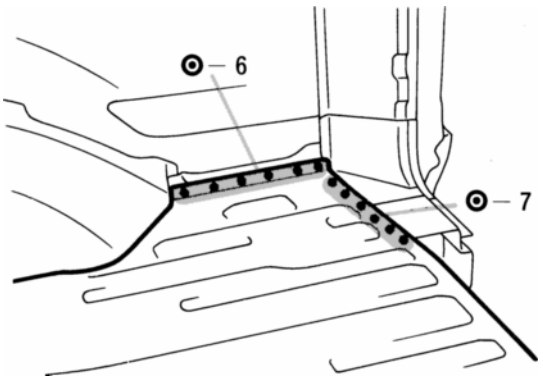

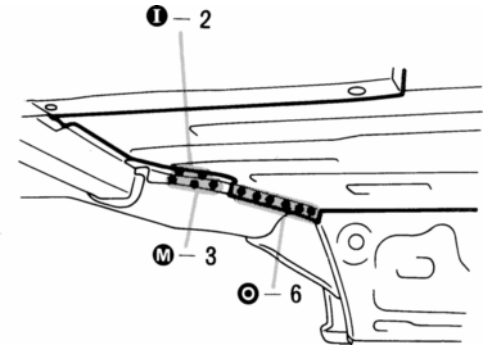

mm	in
890	35.04

1. Cut the parts at the location shown above.

INSTALLATION

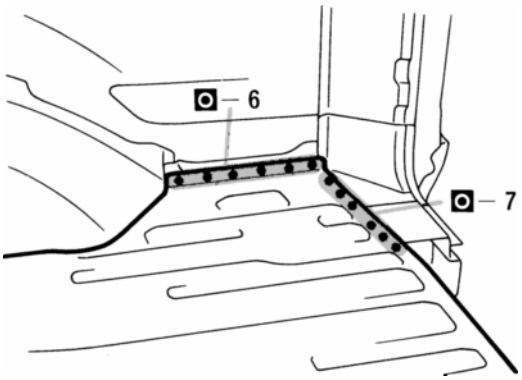

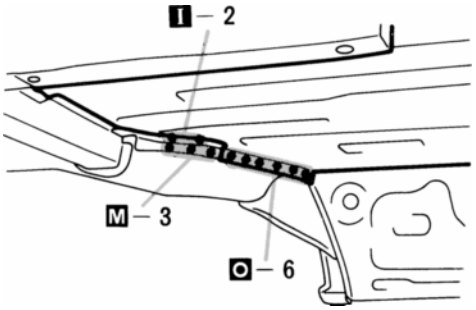

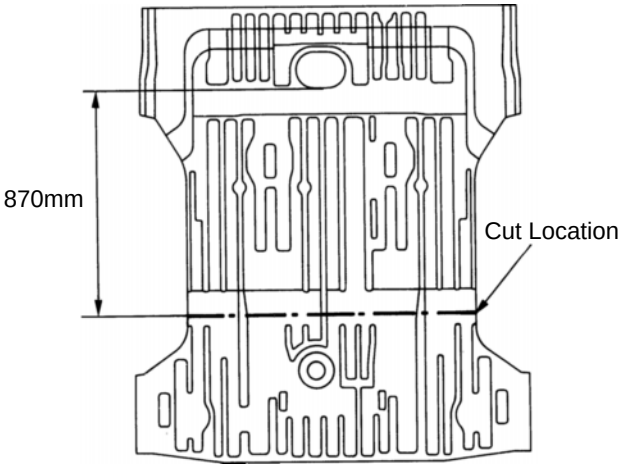

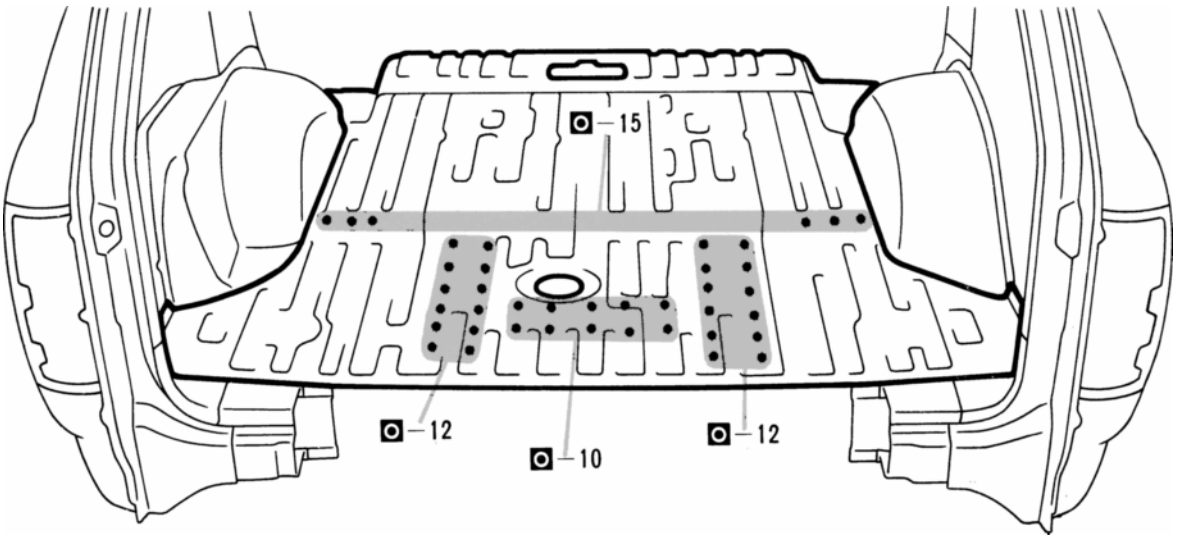

mm	in
870	34.25

1. Cut the new parts at the location shown above.
2. Plug weld the overlapping portion of the new parts.

HINT: Be sure the portion to be welded are align and not loose.

3. Coat the overlapping opening portion from the both sides with body sealer.

REAR FLOOR SIDE PANEL

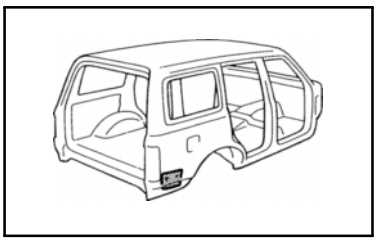

REMOVAL (With the quarter panel removed.)

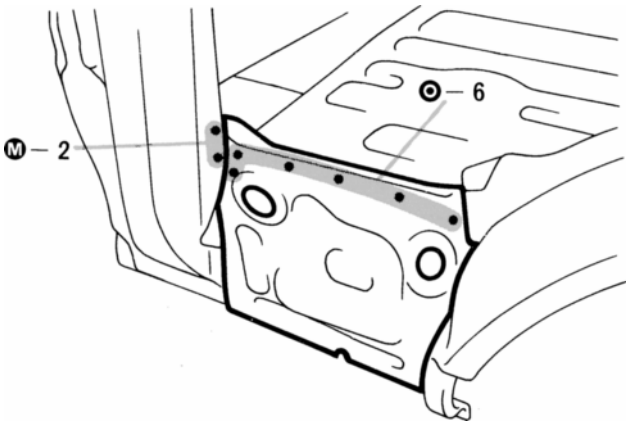

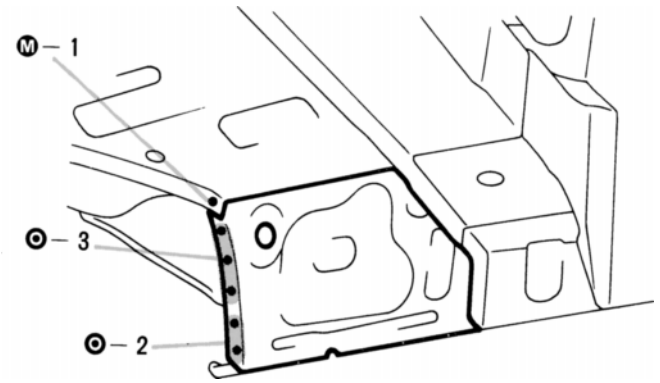

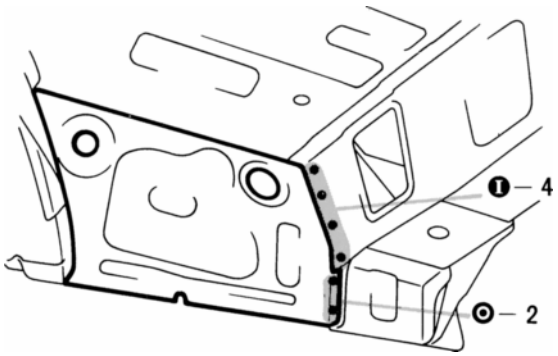

INSTALLATION

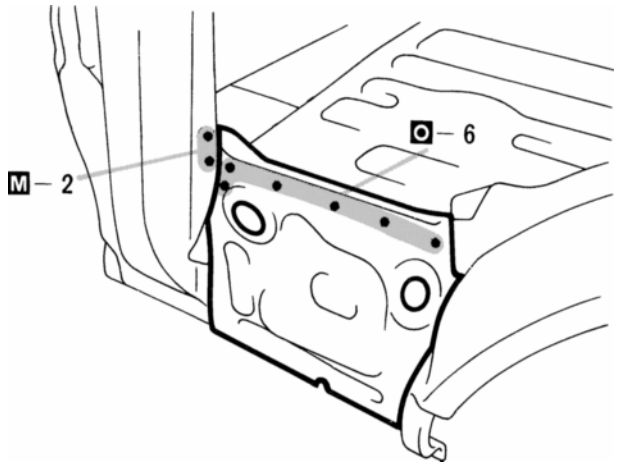

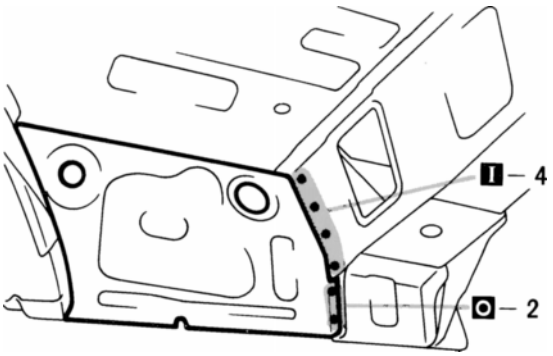

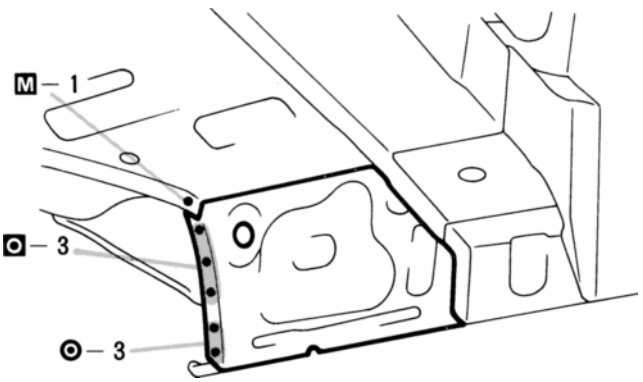

ROOF PANEL (ASSY): Normal Roof

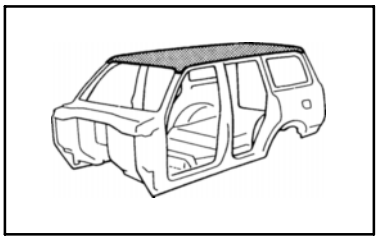

REMOVAL

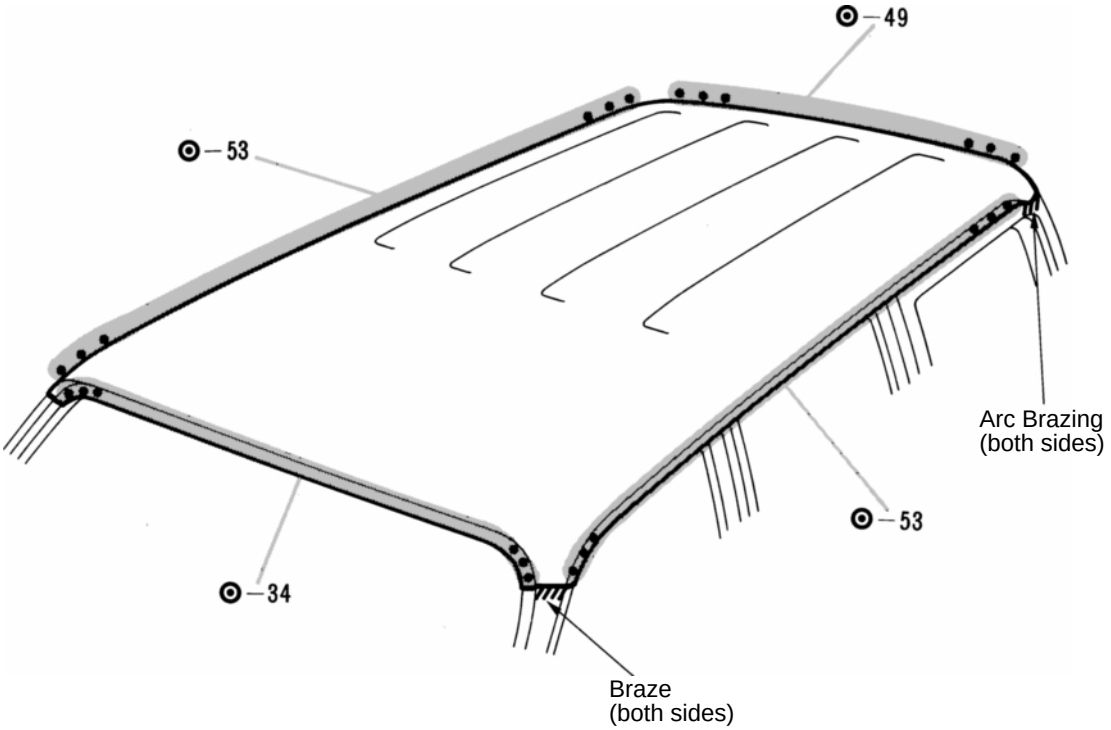

1. Heat the brazed area of the front body pillar and scrape off the brazing with a wire brush.

HINT: Be careful not to overheat the front body pillar.

2. Grind off the roof panel tip at the quarter panel arc brazing connection with a cut grinder.

INSTALLATION

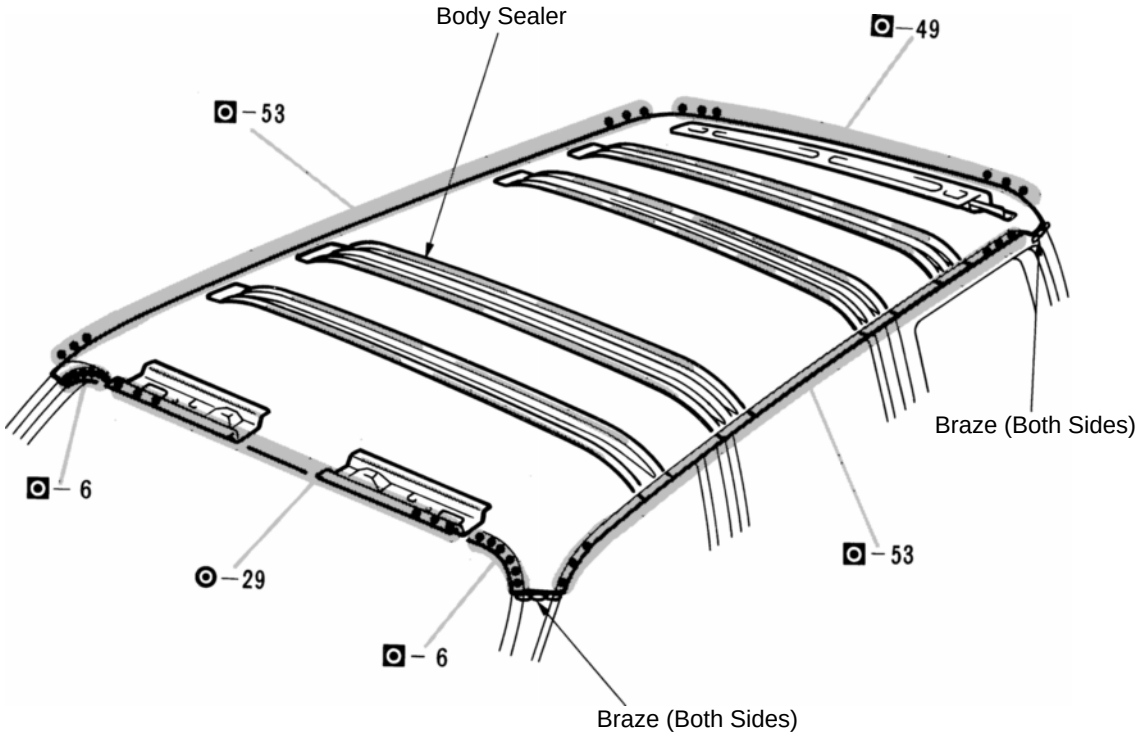

1. Before temporarily installing the new parts, apply body sealer to the windshield header panel, roof panel reinforcement and back door opening frame.

HINT:

1) Apply just enough sealer for the new parts to make contact.

2) For other sealing points, refer to section AR.

2. Braze the front body pillar and quarter panel connection.

HINT: Before performing these operations, place a wet rag on the roof panel to protect it from damage.

ROOF PANEL (ASSY): Moon Roof

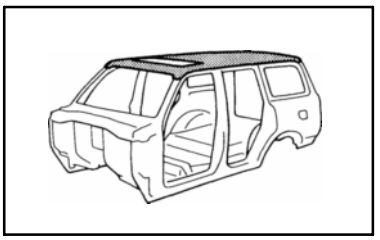

REMOVAL

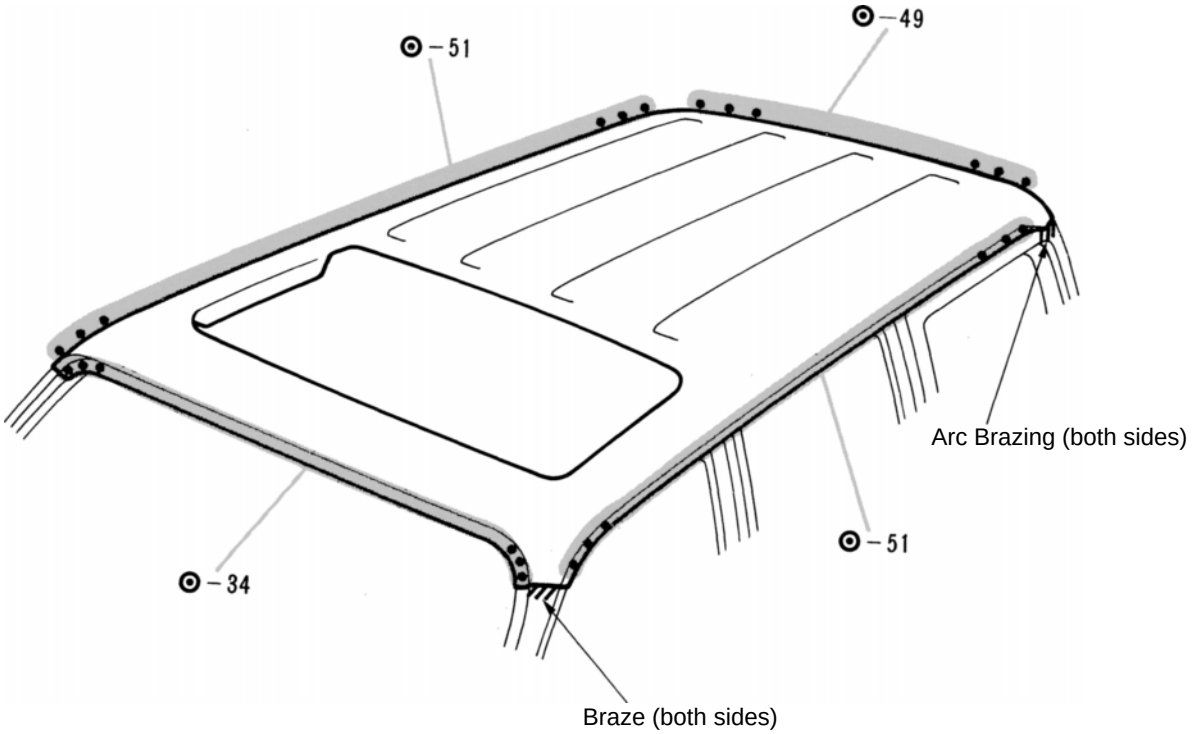

1. Heat the brazed area of the front body pillar and scrape off the brazing with a wire brush.

HINT: Be careful not to overheat the front body pillar.

2. Grind off the roof panel tip at the quarter panel arc brazing connection with a cut grinder.

INSTALLATION

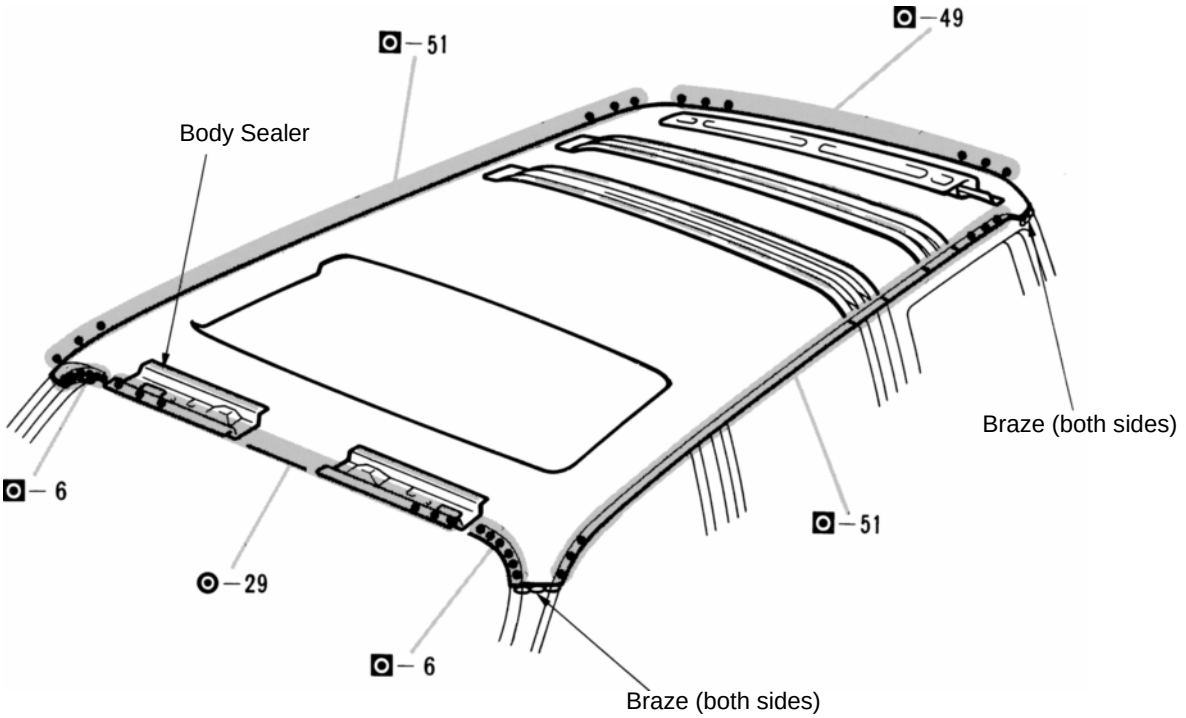

1. Before temporarily installing the new parts, apply body sealer to the windshield header panel, roof panel reinforcement and back door opening frame.

HINT:

1) Apply just enough sealer for the new parts to make contact.

2) For other sealing points, refer to Section AR.

2. Braze the front body pillar and quarter panel connection.

HINT: Before performing these operations, place a wet rag on the roof panel to protect it from damage.

GENERAL INFORMATION

Anti-rust treatment is necessary before welding and before and after the painting process.

ANTI-RUST TREATMENT BEFORE WELDING

1. WELD-THROUGH PRIMER (SPOT SEALER) APPLICATION

For anti-corrosion measures, always apply the weld-through primer (spot sealer) to welding surfaces where the paint film has been removed.

HINT: Apply the weld-through primer (spot sealer) so that it does not ooze out from the joining surfaces.

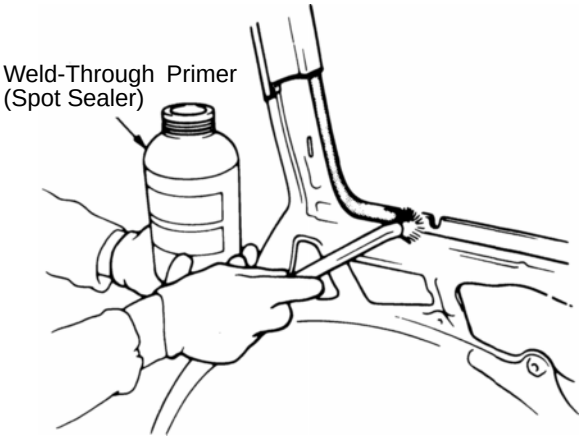

WELD-THROUGH PRIMER (SPOT SEALER) APPLICATION

ANTI-RUST TREATMENT BEFORE PAINTING PROCESS

1. BODY SEALER APPLICATION

For water-proofing and anti-corrosion measures, always apply the body sealer to the body panel seams and hems of the doors, hoods, etc.

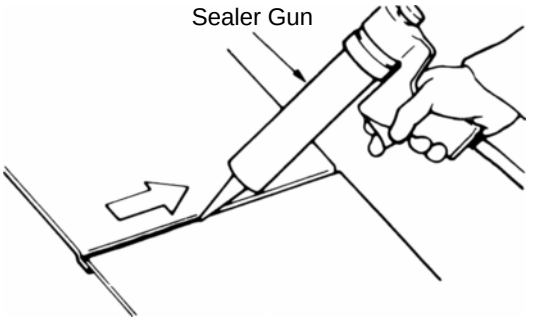

BODY SEALER APPLICATION

2. UNDERCOAT APPLICATION

To prevent corrosion and protect the body from damage by flying stones, always apply sufficient undercoat to the bottom surface of the under body and inside of the wheel housings.

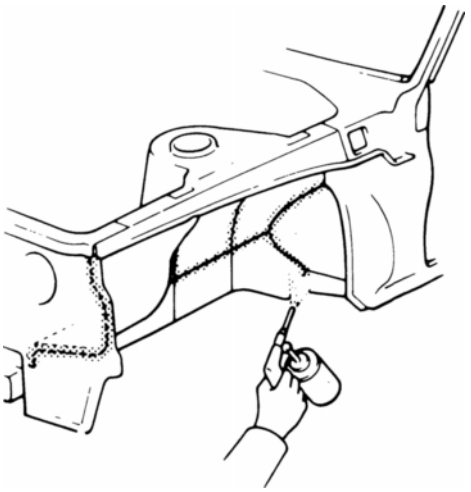

UNDERCOAT APPLICATION

ANTI-RUST TREATMENT AFTER PAINTING PROCESS

1. ANTI-RUST AGENT (WAX) APPLICATION

To preserve impossible to paint areas from corrosion, always apply sufficient anti-rust agent (wax) to the inside of the hemming areas of the doors and hoods, and around the hinges, or the welded surfaces inside the boxed cross-section structure of the side member, body pillar, etc.

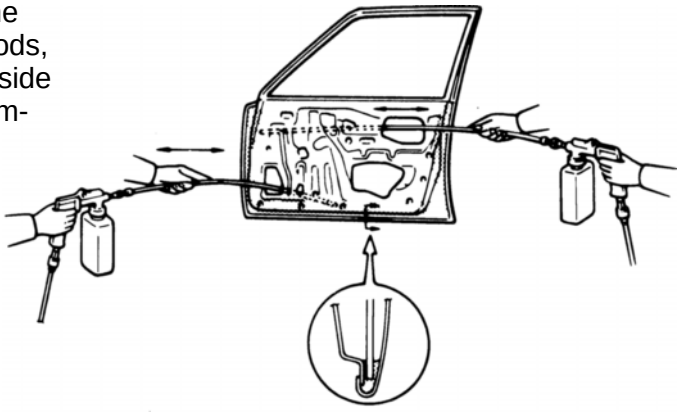

ANTI-RUST AGENT (WAX) APPLICATION

REFERENCE: ANTI-RUST TREATMENT BY PAINTING

Painting prevents corrosion and protects the sheet metal from damage. In this section, anti-chipping paint only for anti-corrosion purpose is described.

1. ANTI-CHIPPING PAINT

To prevent corrosion and protect the body from damage by flying stones, etc., apply anti-chipping paint to the rocker panel, wheel arch areas, valance panel, etc.

HINT:
Depending on the model or the application area, there are cases where the application of anti-chipping paint is necessary before the second coat or after the top coat.

- Apply the anti-chipping paint after the top coat.

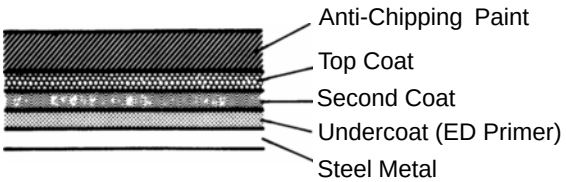

- Apply the anti-chipping paint before the second coat.

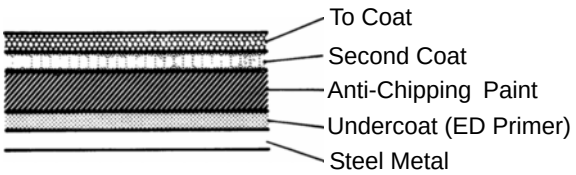

BODY PANEL SEALING AREAS

HINT:

1. *Prior to applying body sealer, clean the area with a rag soaked in a grease, wax and silicone remover.*
2. *If weld-through primer was used, first wipe off any excess and coat with anti-corrosion primer before applying body sealer.*
3. *Wipe off excess body sealer with a rag soaked in a grease, wax and silicone remover.*
4. *If body sealer is damaged by peeling, cracks, etc., be sure to repair as necessary.*

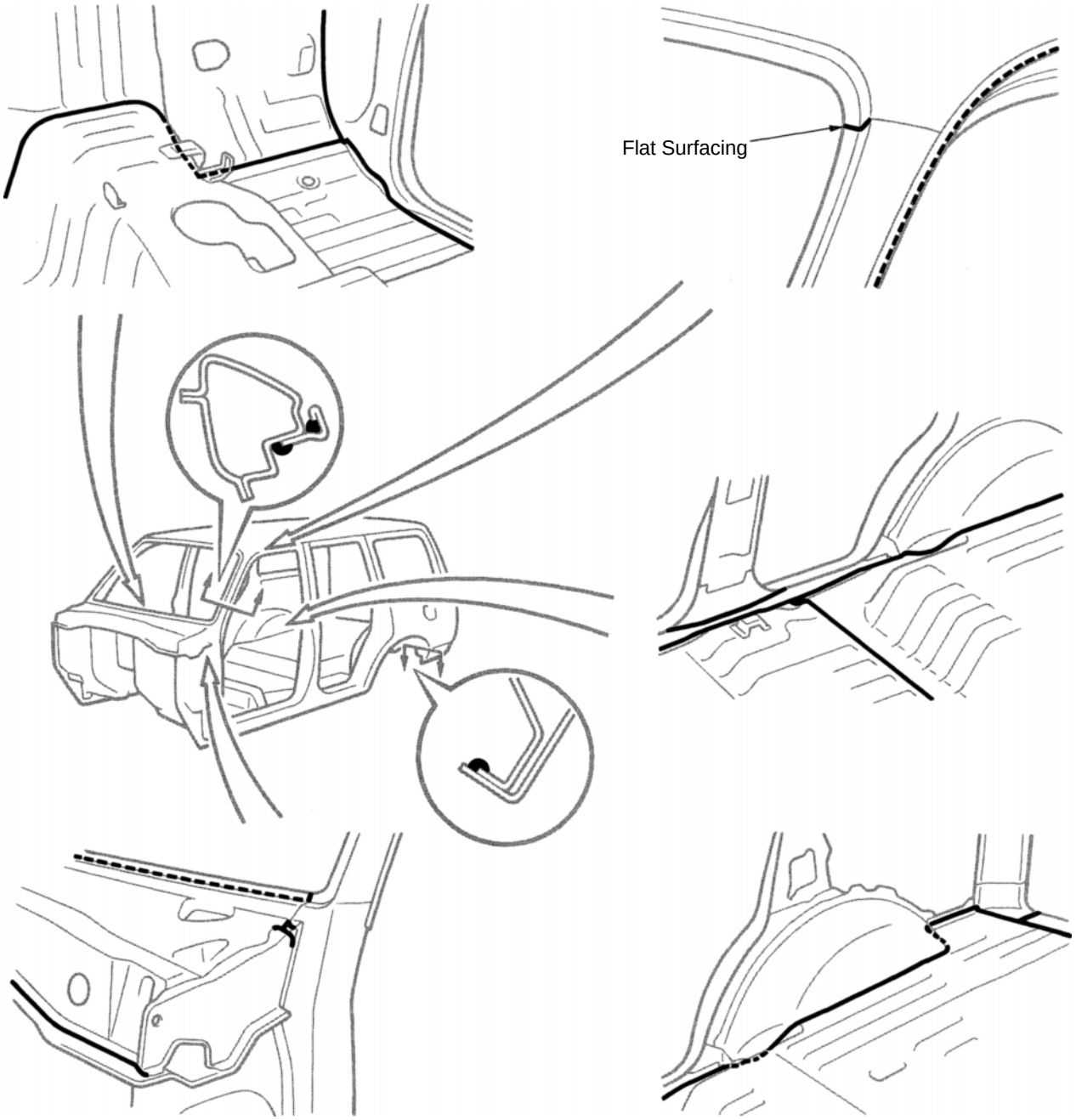

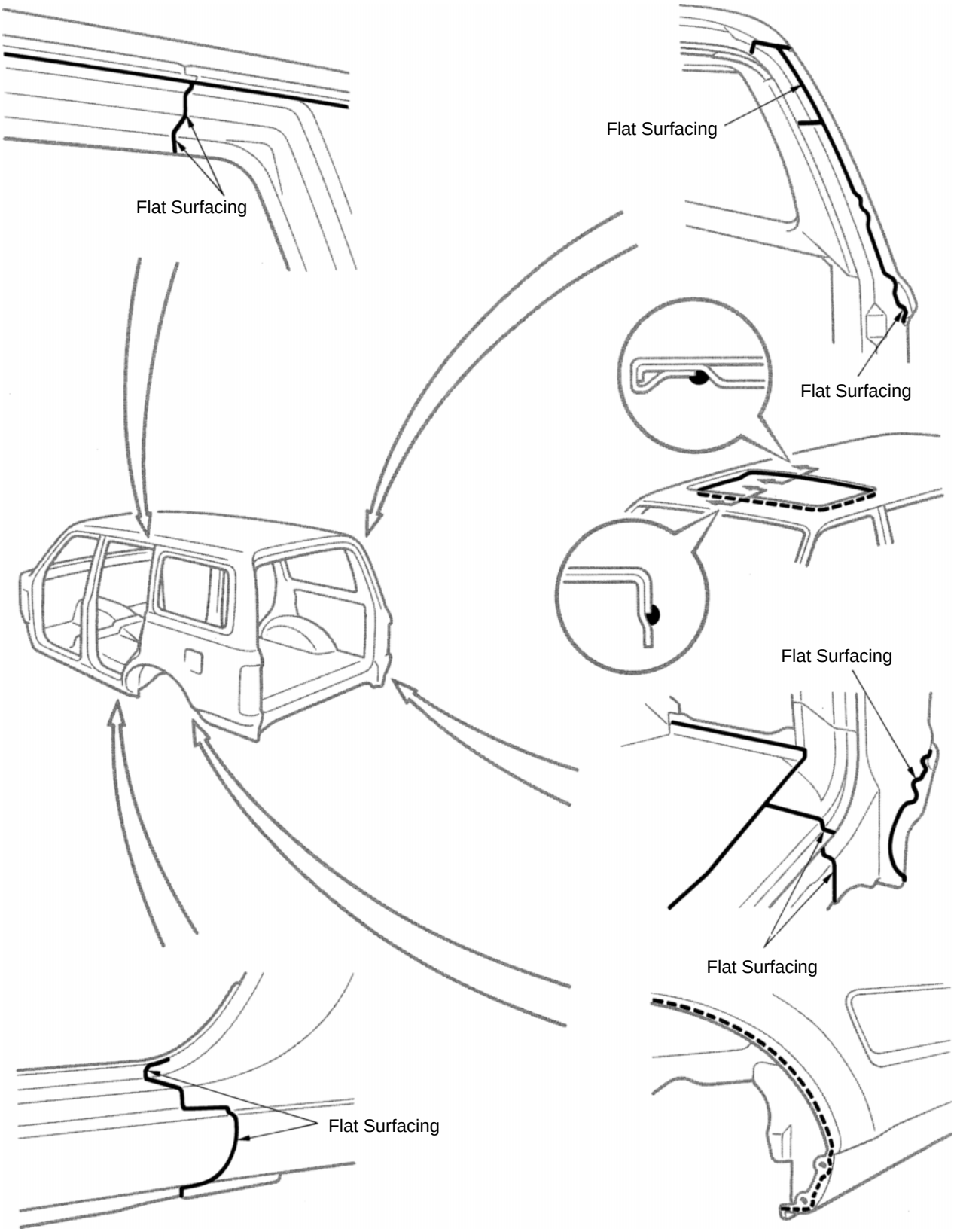
Flat Surfacing
Flat Surfacing
Flat Surfacing
Flat Surfacing
Flat Surfacing
Flat Surfacing

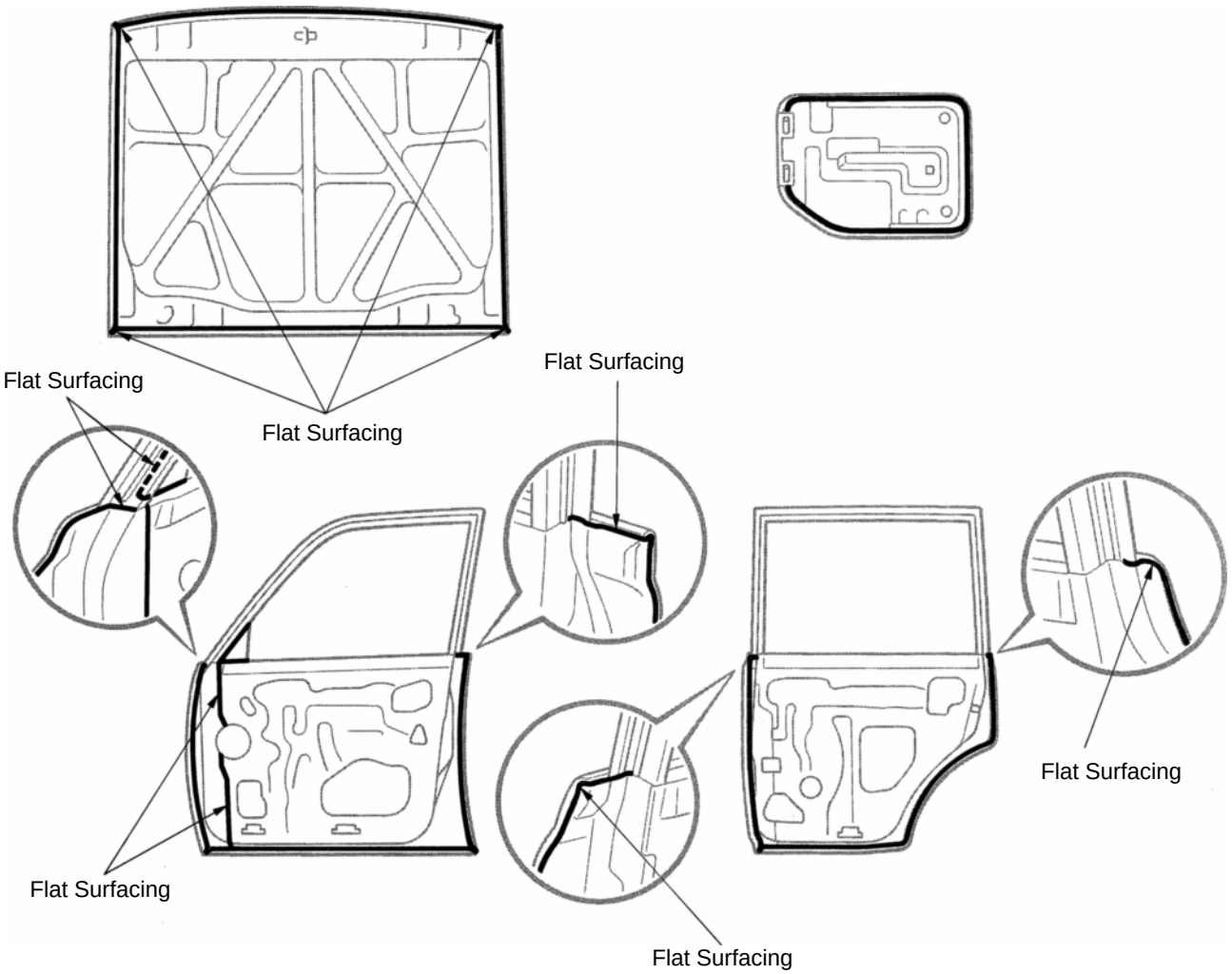
Flat Surfacing
Flat Surfacing
Flat Surfacing
Flat Surfacing
Flat Surfacing
Flat Surfacing

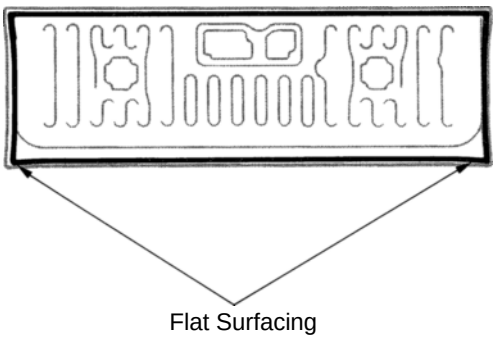
Flat Surfacing

BODY PANEL UNDERCOATING AREAS

HINT:

1. *First wipe off any dirt, grease or oil with a rag soaked in a grease, wax and silicone remover.*
2. *Cover the surrounding areas with masking paper to avoid coating unnecessary areas. If other areas are accidently coated, wipe off the coating immediately.*
3. *Apply the first coating of undercoat to all welded areas and panel joints, then apply a second coat over the entire area.*
4. *Do not coat parts which become hot, such as the tailpipe, or moving parts, such as the propeller shaft.*
5. *Besides the locations described below, apply undercoating to all weld points under the body to insure corrosion prevention.*
6. *Be sure to seal the edge of the flange of the member and bracket with undercoating.*
7. *If undercoat is damaged by peeling, cracks, etc., be sure to repair as necessary.*
8. *Before the undercoat apply sealer allowing rust prevention to be attained.*

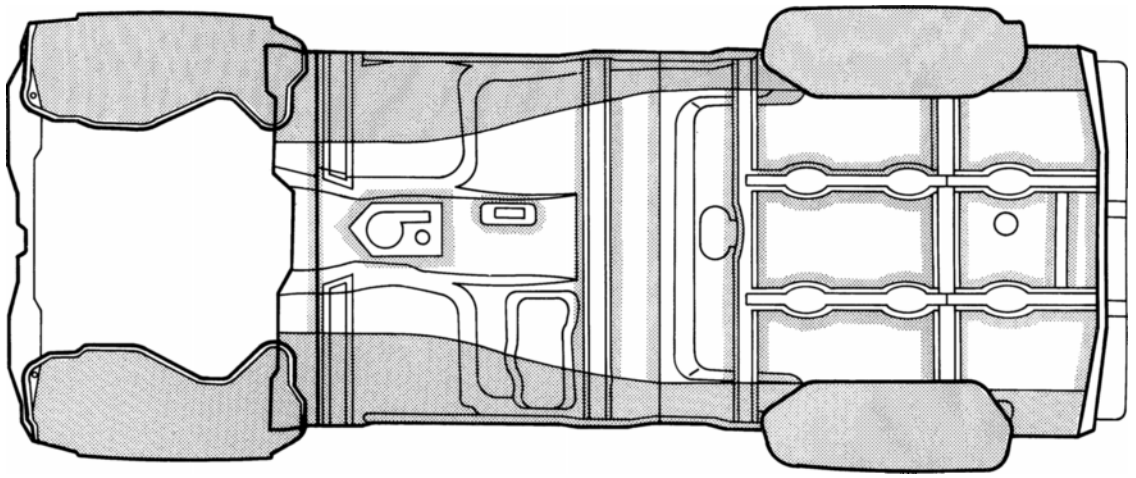

REFERENCE: Referring to the notes above, undercoating should be applied according to the specifications for your country.

BODY PANEL ANTI-RUST AGENT (WAX) APPLICATION AREAS

HINT:

1. *Whenever adjusting the doors and hoods, apply anti-rust agent (wax) around the hinges.*
2. *Even if partially repairing a part, apply anti-rust agent (wax) over the entire application area of the part.*
3. *Wipe off the anti-rust agent immediately with a rag soaked in a grease, wax and silicone remover, if accidently applied to other areas.*

SILENCER SHEET INSTALLATION AREAS

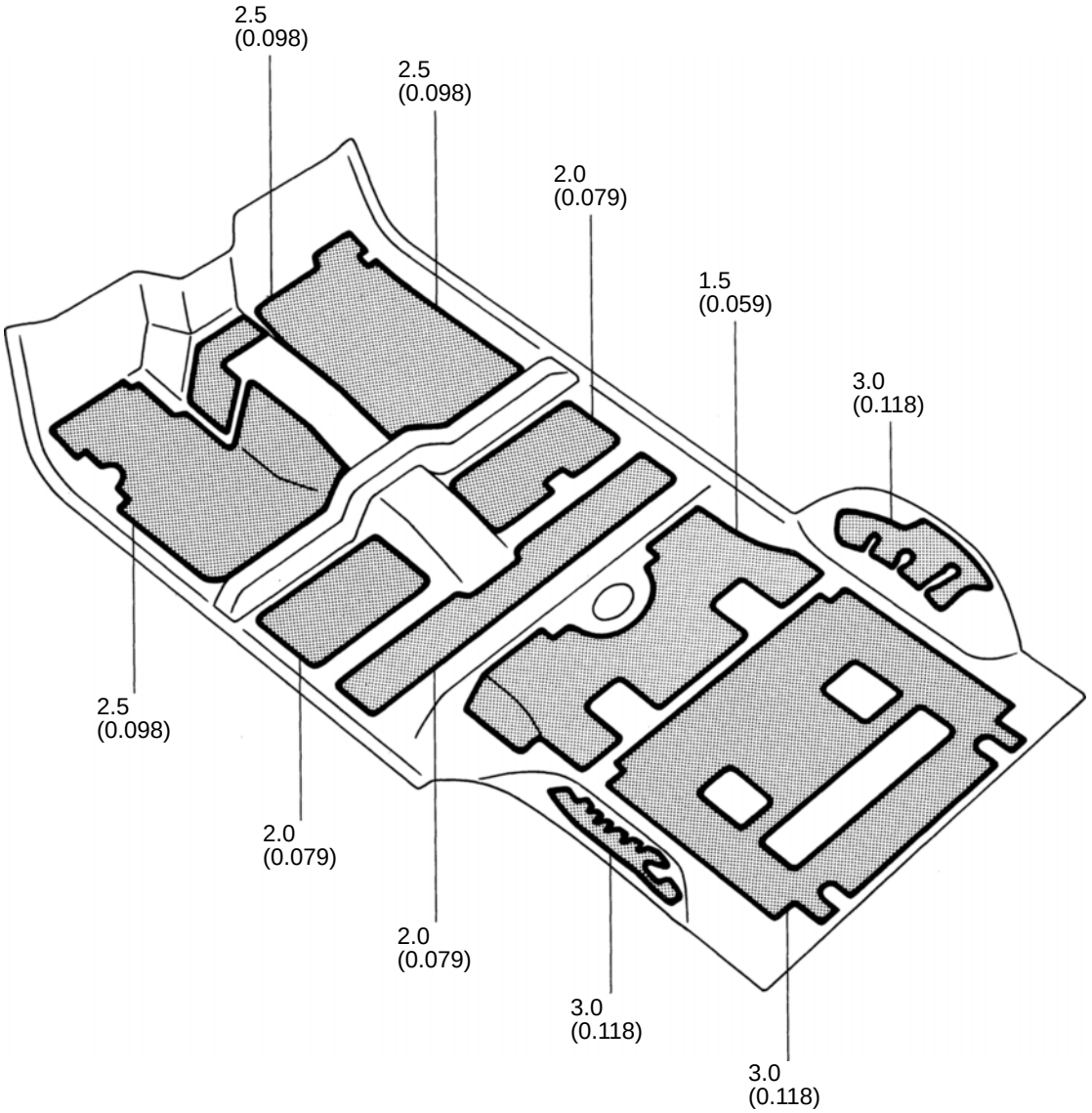

mm (in.): The numbers in the diagram indicate the thickness of the silencer sheet.

GENERAL INFORMATION

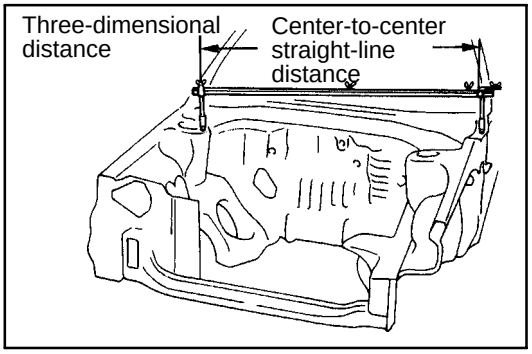

1. BASIC DIMENSIONS

(a) There are two types of dimensions in the diagram.
(Three-dimensional distance)

- Straight-line distance between the centers of two measuring points.

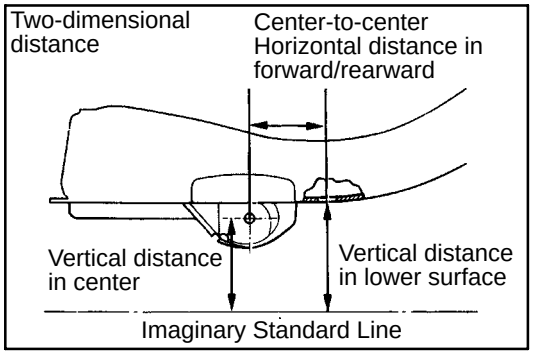

(Two-dimensional distance)

- Horizontal distance in forward/rearward between the centers of two measuring points.
- The height from an imaginary standard line.

(b) In cases in which only one dimension is given, left and right are symmetrical.

(c) The dimensions in the following drawing indicate actual distance. Therefore, please use the dimensions as a reference.

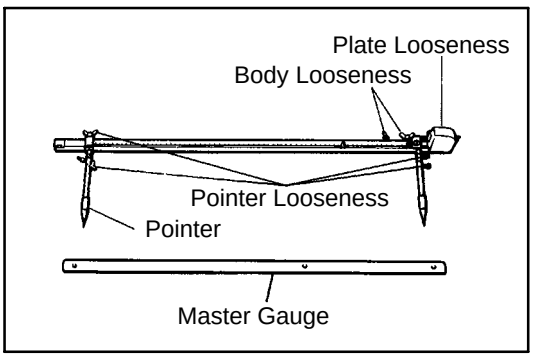

2. MEASURING

(a) Basically, all measurements are to be done with a tracking gauge. For portions where it is not possible to use a tracking gauge, a tape measure should be used.

(b) Use only a tracking gauge that has no looseness in the body, measuring plate, or pointers.

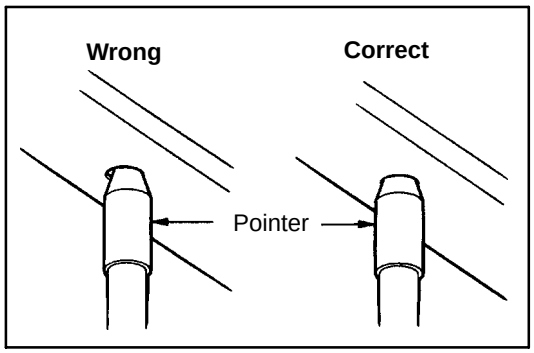

HINT:

1. *The height of the left and right pointers must be equal.*
2. *Always calibrate the tracking gauge before measuring or after adjusting the pointer height.*
3. *Take care not to drop the tracking gauge or otherwise shock it.*
4. *Confirm that the pointers are securely in the holes.*

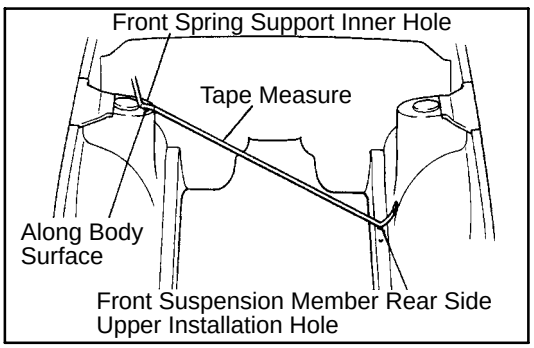

(c) When using a tape measure, avoid twists and bends in the tape.

(d) When tracking a diagonal measurement from the front spring support inner hole to the suspension member upper rear installation hole, measure along the front spring support panel surface.

BODY DIMENSION DRAWINGS

ENGINE COMPARTMENT

(Three-Dimensional Distance)

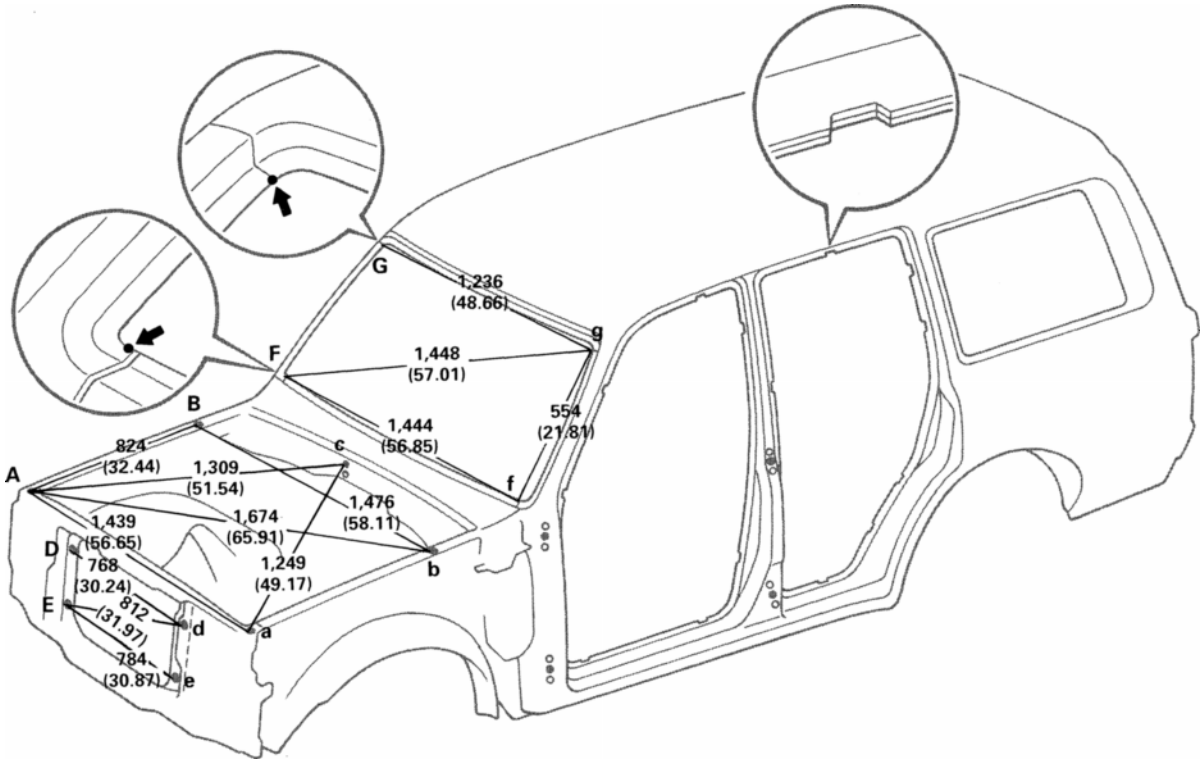

HINT: For symbols, capital letters indicate right side of vehicle, small letters indicate left side of vehicle (Seen from rear.)

mm (in.)

Symbol	Name	Hole dia.	Symbol	Name	Hole dia.
A, a	Front fender installation nut	6 (0.24) nut	E, e	Radiator installation hole	11 (0.43)
B, b	Front fender installation nut	6 (0.24) nut	F, F	Front body pillar/ Cowl top panel adjoining portion	—
c	Water valve installation nut	6 (0.24) nut	G, g	Roof panel / Front body pillar adjoining portion	—
D, d	Radiator installation hole	9 (0.35)	—	—	—

BODY OPENING AREAS (Side View-Front)

(Three-Dimensional Distance)

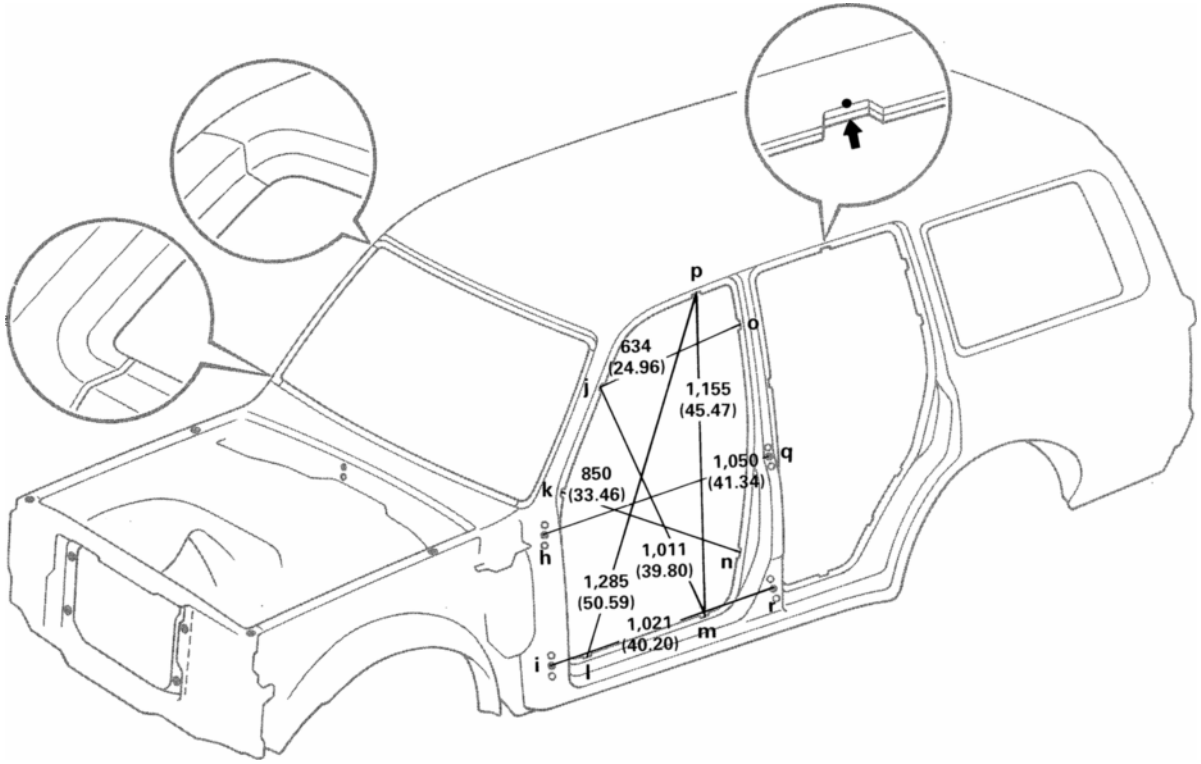

HINT: For symbols, capital letters indicate right side of vehicle, small letters indicate left side of vehicle (Seen from rear).

Vehicle Dimensions Left ↔ Right

J-j	K-k	L-l	M-m	N-n	O-o	P-p
1,351 (53.19)	1,484 (58.43)	1,482 (58.35)	1,490 (58.66)	1,508 (59.37)	1,355 (53.35)	1,253 (49.33)

J-m or i-M	J-o or i-O	K-n or k-N	L-p or l-P
1,743 (68.62)	1,493 (58.78)	1,720 (67.72)	1,874 (73.78)

mm (in.)

Symbol	Name	Hole dia.	Symbol	Name	Hole dia.
H, h	Front body pillar standard hole	11 (0.43)	N, n	Center body pillar assembly mark	—
I, i	Front body pillar standard hole	11 (0.43)	O, o	Center body pillar assembly mark	—
J, j	Front body pillar assembly mark	—	P, p	Roof side rail assembly mark	—
K, k	Front body pillar assembly mark	—	Q, q	Center body pillar standard hole	9 (0.35)
L, l	Rocker panel assembly mark	—	R, r	Center body pillar standard hole	11 (0.43)
M, m	Rocker panel assembly mark	—	—	—	—

BODY OPENING AREAS (Side View-Rear)

(Three-Dimensional Distance)

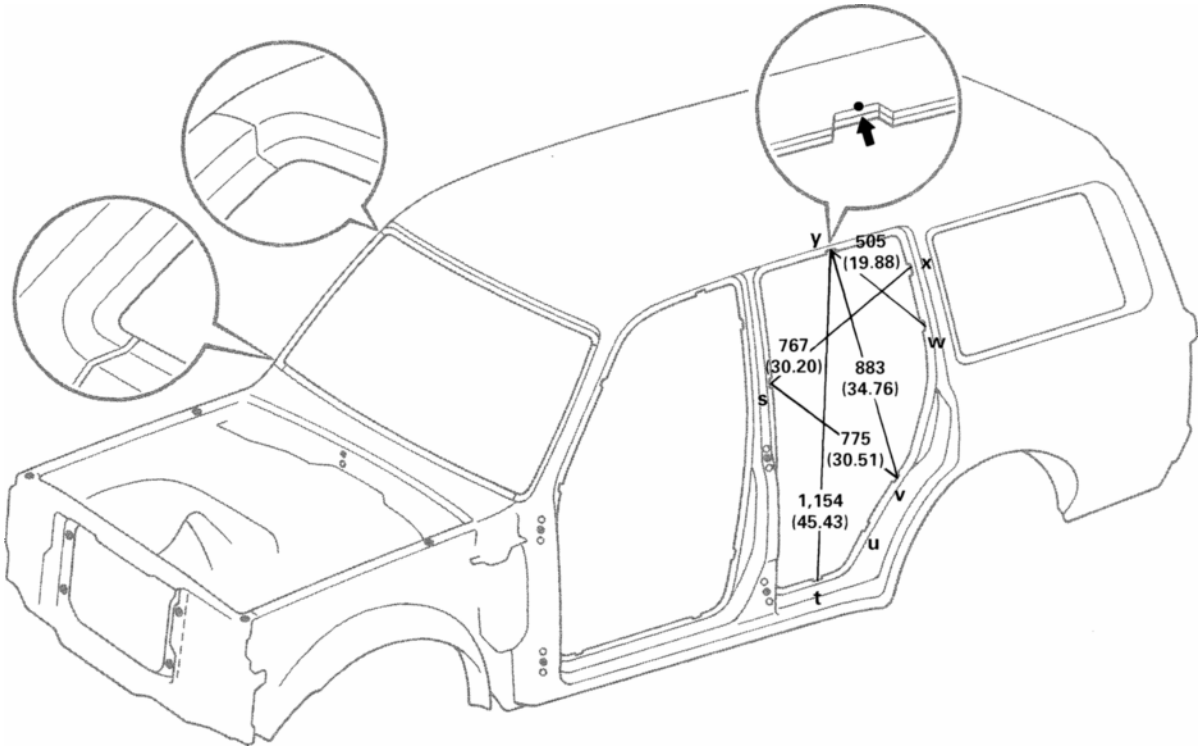

HINT: For symbols, capital letters indicate right side of vehicle, small letters indicate left side of vehicle (Seen from rear).

Vehicle Dimensions Left ↔ Right

S-s	T-t	U-u	V-v	W-w	X-x	Y-y
1,468 (57.80)	1,498 (58.98)	1,516 (59.69)	1,526 (60.08)	1,445 (56.89)	1,343 (52.87)	1,246 (49.06)

S-v or s-V	S-x or s-X	T-y or t-Y
1,686 (66.38)	1,602 (63.07)	1,788 (70.39)

mm (in.)

Symbol	Name	Hole dia.	Symbol	Name	Hole dia.
S, s	Center body pillar assembly mark	—	W, w	Quarter panel assembly mark	—
T, t	Rocker panel assembly mark	—	X, x	Quarter panel assembly mark	—
U, u	Quarter panel assembly mark	—	Y, y	Roof side rail assembly mark	—
V, v	Quarter panel assembly mark	—	—	—	—

BODY OPENING AREAS (Rear View: Lift Type)

(Three-Dimensional Distance)

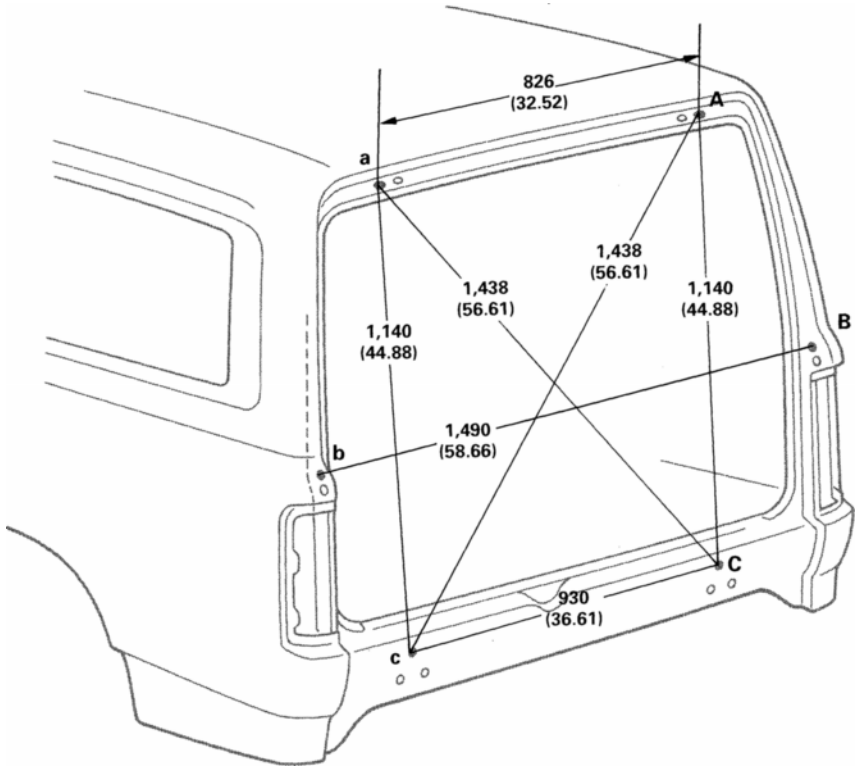

HINT: For symbols, capital letters indicate right side of vehicle, small letters indicate left side of vehicle (Seen from rear).

mm (in.)

Symbol	Name	Hole dia.	Symbol	Name	Hole dia.
A, a	Back door hinge installation hole	14 (0.55)	C, c	Back door hinge installation nut	8 (0.31) nut
B, b	Back door stopper installation nut	8 (0.31) nut	—	—	—

FRAME DIMENSION

(Three-Dimensional Distance)

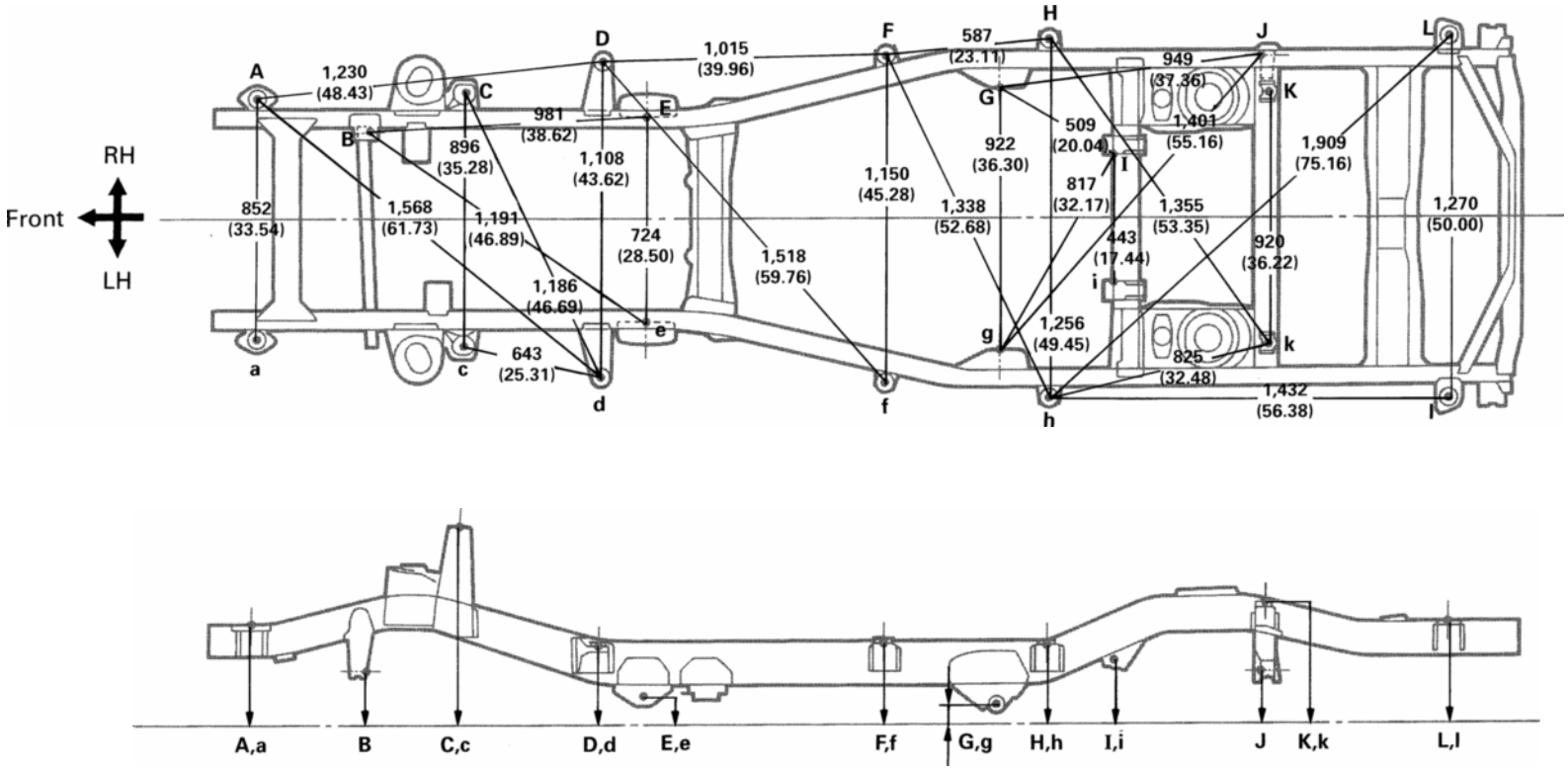

HINT: For symbols, capital letters indicate right side of vehicle, small letters indicate left side of vehicle (Seen from rear).

mm (in.)

Symbol	Name	Hole dia.	Symbol	Name	Hole dia.
A, a	Body mounting hole	60 (2.36)	G, g	Lower control arm installation hole-inner	18.5 (0.728)
B	Lateral control rod installation hole-rear	18.5 (0.728)	H, h	Body mounting hole	24 (0.94)
C, c	Shock absorber installation hole	24 (0.94)	I, i	Upper control arm installation hole-inner	18.5 (0.728)
D, d	Body mounting hole	28 (1.10)	J	Lateral control rod installation hole-front	16.5 (0.650)
E, e	Leading arm installation hole-inner	18.5 (0.728)	K, k	Body mounting hole	22 (0.87)
F, f	Body mounting hole	24 (0.94)	L, l	Body mounting hole	60 (2.36)

FRAME DIMENSION (Cont'd)

(Two-Dimensional Distance)

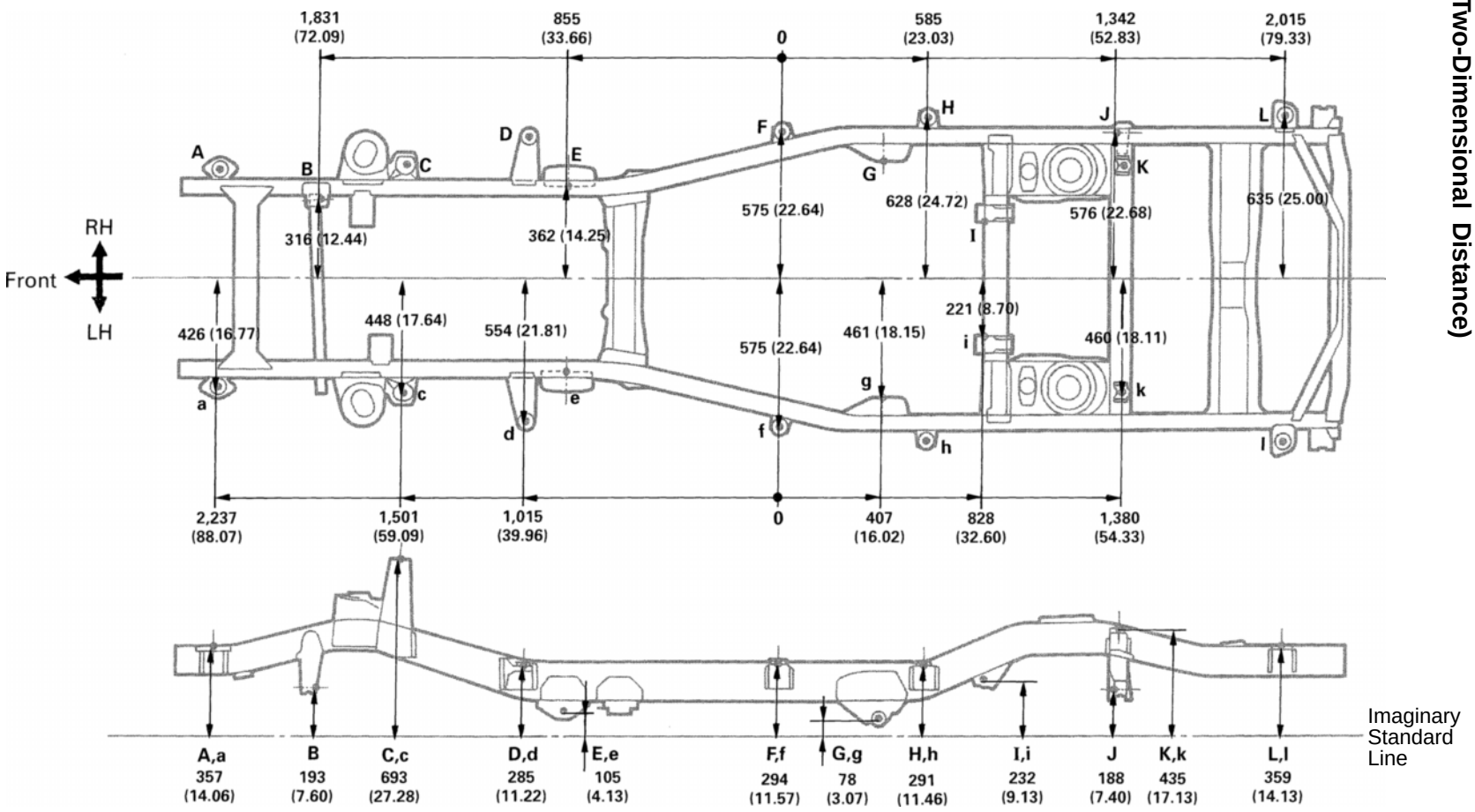

Wheel Base	2,850 (112.20)

HINT: For symbols, capital letters indicate right side of vehicle, small letters indicate left side of vehicle (Seen from rear).

mm (in.)

Symbol	Name	Hole dia.	Symbol	Name	Hole dia.
A, a	Body mounting hole	60 (2.36)	G, g	Lower control arm installation hole-inner	18.5 (0.728)
B	Lateral control rod installation hole-rear	18.5 (0.728)	H, h	Body mounting hole	24 (0.94)
C, c	Shock absorber installation hole	24 (0.94)	I, i	Upper control arm installation hole-inner	18.5 (0.728)
D, d	Body mounting hole	28 (1.10)	J	Lateral control rod installation hole-front	16.5 (0.650)
E, e	Leading arm installation hole-inner	18.5 (0.728)	K, k	Body mounting hole	22 (0.87)
F, f	Body mounting hole	24 (0.94)	L, l	Body mounting hole	60 (2.36)